Datex-Ohmeda

S/5™ UPI Board, B-UPI4 (rev. 00)
S/5™ UPINET Board, B-UPI4NET (rev. 00)

Technical Reference Manual Slot

All specifications are subject to change without notice.

Document No. 800 1022-1

June 2001

Datex-Ohmeda Inc.
3030 Ohmeda Drive
53707-7550 MADISON, WIS
USA
Tel. +1-608-221 1551, Fax +1-608-222 9147
www.us.datex-ohmeda.com

Datex-Ohmeda Division,
Instrumentarium Corp.
P.O. Box 900, FIN-00031
DATEX-OHMEDA, FINLAND
Tel. +358 10 394 11 Fax +358 9 146 3310
www.datex-ohmeda.com

TABLE OF CONTENTS

S/5™ UPI Board, B-UPI4
S/5™ UPINET Board, B-UPI4NET

TABLE OF FIGURES

INTRODUCTION

Datex-Ohmeda S/5 UPI4NET board, B-UPI4NET integrates the UPI board and the Network Board, B-NET. Datex-Ohmeda S/5 UPI4 board, B-UPI4 is the same board as UPI4NET except it does not contain network related components.

The UPI4NET and UPI4 boards provide interfaces for example for a computer, parallel printer and Device Interface Solution (DIS). In addition, the boards have two digital output signals and two analog output signals for other interfaces.

The use of UPI4NET or UPI4 board requires S/5 Anesthesia or Critical Care main software.

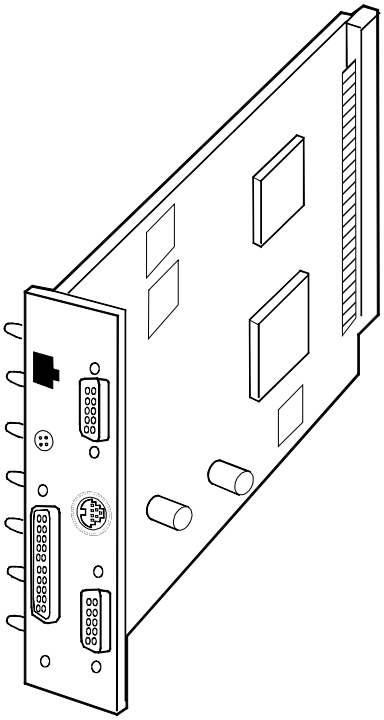

Figure 1 UPINET Board, B-UPI4NET

1 TECHNICAL SPECIFICATIONS

1.1 General

- Voltages:
  +5 V, 500 mA
  +15 VD, 50 mA + DIS power supply
- Voltage and temperature measurement

1.2 UPI

- Supports RS485 500 kbps module bus communication
- Supports RS422 500 kbps Device Interface Solution (DIS) bus communication
- Printer port (LPT)
- RS232 level communication driven by B-CPU4
- Analog signals:
  - Direct ECG
  - Pressure Out
- ▪ Digital signals:
  - Defibrillation Synchronization
  - Nurse Call

1.3 NET (Ethernet)

- Meets IEEE802.3 specifications (10BASE-T)
- Hospital grade approved data transformer
- Coding element interface

2 FUNCTIONAL DESCRIPTION

2.1 General

2.1.1 UPI section

The UPI section functions as a general I/O-board. It performs I/O duties assigned to it by the CPU board. The main processor in the CPU board and the processor in the UPI section communicate through a dual-port memory which is located on the UPI4(NET) board.

Functional blocks

The UPI section contains the external bus interface, a processor, program- and dual-port memories and I/O-block.

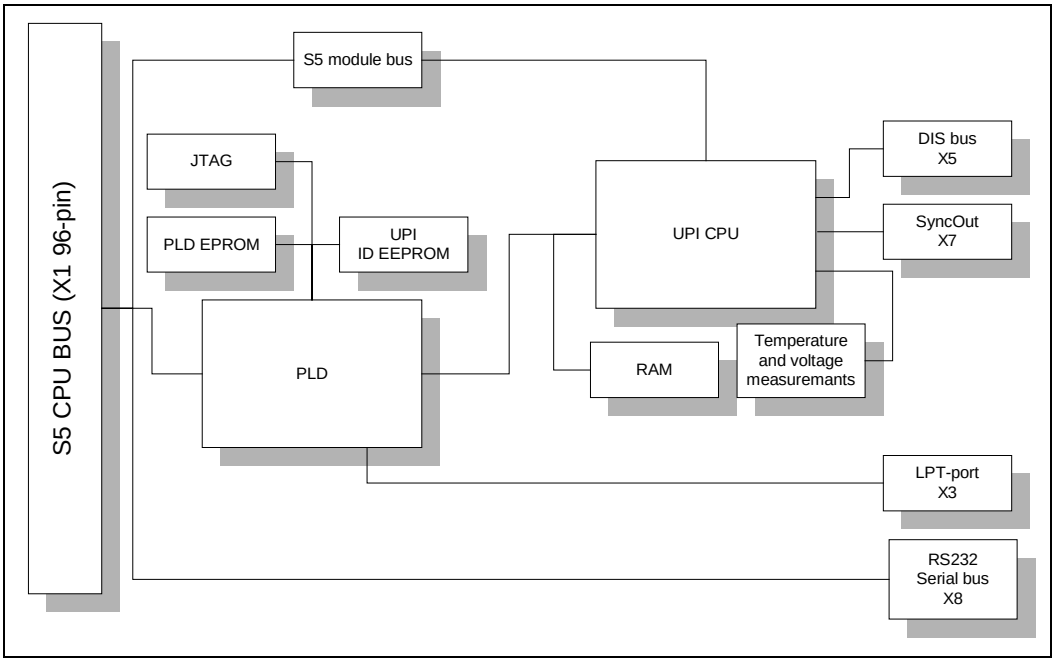

Figure 2 UPI section block diagram

External bus interface

The UPI section is connected to the CPU mother board. The following signals pass on between the UPI section and CPU mother board: data bus, address bus, reset, read and write signals, and other related signals.

Processor

The processor in the UPI section is an H8S/2655, which functions at 16 MHz frequency.

RS232 serial bus interfaces

RS232 serial bus is connected to the connector X8. That serial channel is driven by the CPU board. Only the RS232 buffer and some filtering components are located in the UPI4(NET) board.

RS485 module bus interface

RS485 half-duplex communication bus for modules. Communication speed rate is 500 kbps.

RS422 DIS bus interface

RS422 full-duplex communication bus for DIS modules. Communication speed rate is 500 kbps. DIS interface includes DIS power supply that gives voltages +8 V (max 1A) and +15 VD (max 1A).

2.1.2 NET section

The NET section is illustrated in a block diagram shown in figure 3.

The network interface controller is basically the heart of the NET section. The interface controller communicates with the CPU board through the controller registers to the RAM. During the startup sequence controller loads its address and some initializations from EEPROM.

The network interface controller transmits data packets to the S/5 Network and receives data packets from the network through the 10BASE-T transformer. The transformer filters and transforms the data and also provides the isolation.

The Ethernet status LEDs indicate the status of the network communication. The status LEDs are controlled by the network controller. The LEDs are not visible when the board is installed into the monitor.

The PLD interfaces the coding element. The coding element contains information on the monitor location. The network address is transmitted to the CPU board through the network controller and the monitor location information is transmitted to the CPU board through PLD interface.

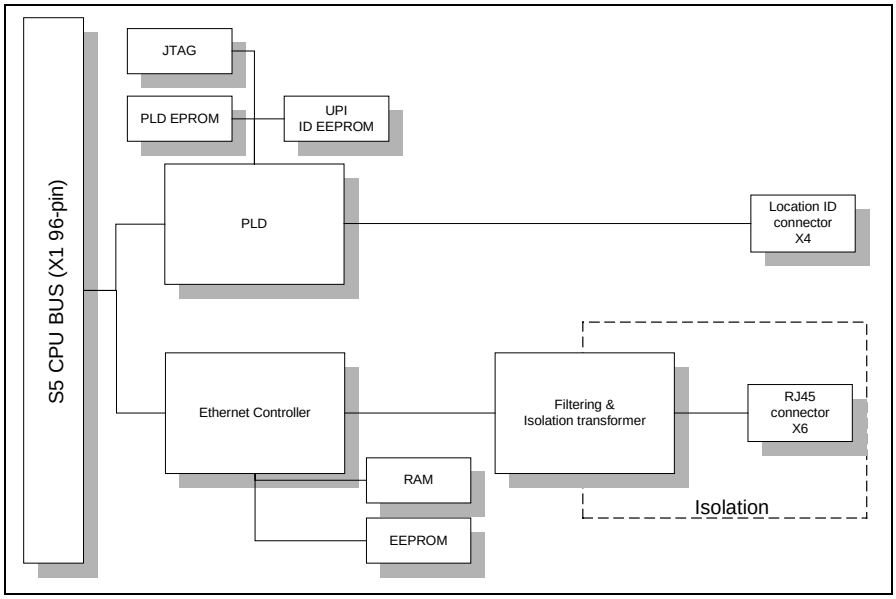

Figure 3 NET section block diagram

2.2 Ethernet interfaces

The data transformer is designed by Datex-Ohmeda and it is hospital grade approved.

Adapter's 10BASE-T is a interface with 7-pole butterworth low-pass filters on the unisolated side of the transformer. On the isolated side there is a common mode choke for both transmitting and receiving lines.

There are also three LEDs on the board, which are not seen from the outside, indicating the following things:

- activity in Ethernet	H1	Green
- collision detection	H3	Yellow
- good link in 10BASE-T interface	H2	Green

The activity LED (H1) flashes when communication packets are detected in the S/5 Network. The collision detection LED (H3) indicates a packet collision on the network. The collision detection LED should flash only occasionally, otherwise there may be a physical layer problem. The good link LED (H2) indicates whether or not the communication link to the HUB is functional. The good link LED should always be lit.

2.3 Connectors and signals

2.3.1 Ethernet Network Interface

Network Connector, X6

RJ45 connector	Pin	Signal
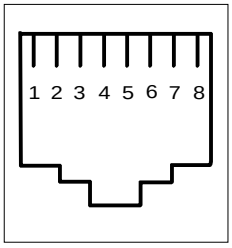	1	Tx +
	2	Tx -
	3	Rx +
	4	N/C
	5	N/C
	6	Rx -
	7	N/C
	8	N/C

2.3.2 Network coding element interface

Coding element connector, X4

9 pin female D-connector

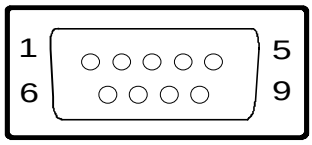

Pin	Signal
1	IDCS1 (chip select)
2	IDCL (clock)
3	IDDI (data in)
4	IDDO (data out)
5	IDPE (protect enable)
6	+5Vdc
7	Direct ECG
8	Nurse call
9	gnd

Direct ECG (pin 7)

- Delay (max.): 15 ms
- Gain ECG (in)/ECG(out): 1 mV/1V

NOTE: The direct ECG out signal is not available with the Central Unit, F-CU8 rev. 01, and with modules M-ESTP rev. 01, M-EST rev. 00 and M-ETP rev. 00.

Nurse Call (pin 8)

The nurse call signal is generated by the red, yellow and white alarms. When activated, the signal is set to the high state and remains at the high state until the alarm situation is over or the SILENCE ALARM key is pressed. The high state range is from 2.8 to 5 V, while the low state range is from 0 to 0.8 V.

If the output signals are used simultaneously with the coding element, the B-UPINET Y-cable, order number 889308, is recommended to be used.

2.3.3 RS232 serial data interface

RS232 Serial data connector X8

9 pin male D-connector

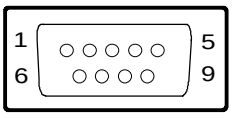

Pin	Signal
1	GND
2	RxD
3	TxD
4	NC
5	GND
6	N/C
7	RTS
8	CTS
9	N/C

2.3.4 DIS interface (RS422)

DIS connector, X5

10 -pin female connector

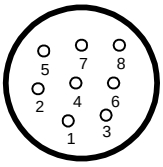

Pin	Signal
1	DIS_out +
2	DIS_out -
3	15V_DIS
4	GND
5	8V_DIS
6	GND
7	DIS_in +
8	DIS_in -

The Invasive pressure output signal is 1 V/100 mmHg, originally ranging from 0 to 300 mmHg, and with a delay of approximately 25 ms. The signal requires an input impedance of 100 kΩ.

2.3.5 Synchronization interface

Synchronization connector , X7

4 pin female connector

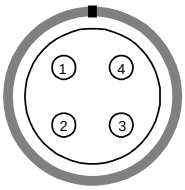

Pin	Signal
1	GND
2	Def_Sync
3	Direct ECG
4	Pressure Out

Direct ECG (PIN 3):

- Delay (max.): 15 ms
- Gain ECG (in)/ECG(out): 1 mV/1V

NOTE: The direct ECG out signal is not available with the Central Unit, F-CU8 rev. 01, and with modules M-ESTP rev. 01, M-EST rev. 00 and M-ETP rev. 00.

Pressure out (PIN 4):

- P1 from hemodynamic module

The Invasive pressure output signal is 1 V/100 mmHg, originally ranging from 0 to 300 mmHg, and with a delay of approximately 25 ms. The signal requires an input impedance of 100 kΩ.

Printer interface

Standard printer connector , X3

25 pin female D-connector	Pin	Signal
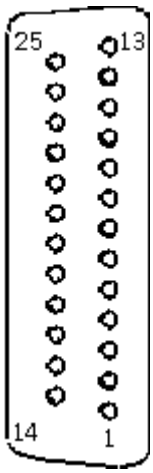	1	Data_clk
	2	Data0
	3	Data1
	4	Data2
	5	Data3
	6	Data4
	7	Data5
	8	Data6
	9	Data7
	10	N/C
	11	Printer busy
	12	Paper end
	13	N/C
	14	N/C
	15	Error/
	16	N/C
	17	GND
	18	GND
	19	GND
	20	GND
	21	GND
	22	GND
	23	GND
	24	GND
	25	GND

2.3.6 Connection to the S/5 bus

S/5 CPU bus connector X1

	A	B	C
1	+15 V	AGND	DGND
2	-15 V	BALE	DGND
3	SA0	SA1	DGND
4	SA2	SA3	RESET_RS485
5	SA4	SA5	-RESET_RS485
6	SA6	SA7	DATA_RS485
7	SA8	SA9	-DATA_RS485
8	SA10	SA11	TXDD_RS232
9	SA12	SA13	RXDD_RS232
10	SA14	SA15	Direct_ECG_PWM
11	SA16	SA17	BIT1IN
12	SA18	SA19	TXDC
13	SA20	SA21	RXDC
14	SA22	SA23	RTSC
15	-SMEMR	-SMEMW	CTSC
16	-IOR	-IOW	TXDB
17	CLK	-RESET	RXDB
18	-IOCHRDY	IRQ10	RTSB
19	N/C_1	IRQ11	CTSB
20	N/C_2	IRQ12	TXDA
21	-SBHE	IRQ15	RXDA
22	SD0	SD1	RTSA
23	SD2	SD3	CTSA
24	SD4	SD5	LOUDSPEAKER
25	SD6	SD7	+5 V
26	SD8	SD9	+5 V
27	SD10	SD11	+5 V
28	SD12	SD13	+5 V
29	SD14	SD15	ON/STBY
30	+15 VD	-RESET_CPU	+5 V_CPU
31	+15 VD	+32 VD	REFRESH_WD
32	GNDD	GNDD	POWER_FAIL

3 SERVICE PROCEDURES

Due to the nature of the UPI4(NET) board, field service is limited only for troubleshooting. Faulty UPI4(NET) boards are returned to Datex-Ohmeda for repair.

Datex-Ohmeda is always available for service advice. Please provide the unit serial number, full type designation and a detailed description of the fault.

CAUTION Only trained personnel with appropriate tools and equipment are allowed to perform the tests and repairs outlined in this section. Unauthorized service may void warranty of the unit.

3.1 Service check for the NET section

These instructions include complete procedures for a service check for the UPI4(NET) board. The service check is recommended to be performed after any service repair. However, the service check procedures can also be used for determining possible failures.

The procedures should be performed in ascending order.

The instructions include a check form *(Appendix* A) which should be filled in when performing the procedures.

The mark ✍ in the instructions means that the check form should be signed after performing the procedure.

The procedures are designed for monitors with S/5 monitor software of revision 01. However, most of the procedures also apply to monitors, which contain some other monitor software type/revision.

3.1.1 Recommended tools

Tool	Order No.	Notes
Command Bar / Command Board		
M-NE(12)STPR/M-ESTPR/M-ESTP		
Datex-Ohmeda gas monitor		e.g. Capnomac Ultima
UPI Interface cable	887245	
Datex-Ohmeda Network		only for UPI4NET
Mon-Net cable		only for UPI4NET
Patient simulator		
Screwdriver		

General

Make sure the monitor is switched to standby. Press the service reset -switch at back of the power supply unit at least for five seconds. Disconnect the Mon-Net cable, Identification plug and Network cable extension from the UPI4NET board, if installed.

Detach all PC boards from the right side of the UPI4(NET) board. Detach the UPI4(NET) board carefully by pulling it from the connector X3 (25 pin female D-connector).

NOTE: The UPI4(NET) board contains components on both sides of the PC board. Therefore, installation of UPI4(NET) board should be done with extra care.

NOTE: Wear a static control wrist strap when handling PC boards. Electrostatic discharge may damage components on the board.

1. Check that the UPI4(NET) board connectors are intact and all connector cables are connected properly on the PC board.

2. Check that none of the PC board components is damaged (on both sides) and the IC on a socket is attached properly.

3. Check that all block screws for cables are in place and are tightened properly. Check also that their threads are intact.

4. Check that the grounding plate under the PC board rear panel is attached properly and is not bent.

UPI functions

Re-install the UPI4(NET) board together with the other detached PC boards carefully. Do not connected any cables to the UPI4(NET) board at this point. Switch the monitor on. Make sure that M-NE(12)STPR/M-ESTPR/M-ESTP module is installed. Connect a patient simulator to the module.

5. Check that the displayed parameter data and waveforms are reasonable.

6. Enter the service menu.
   Monitor Setup - ***Install/Service*** (password 16-4-34) - ***Service*** (password 26-23-8) – ***Frame*** -***Power Supply***
   Check that the displayed voltage and temperature values (measured by the UPI4(NET) board) are reasonable.

7. Test UPI4(NET) board watchdog function.
   Set / Test – WD by UPIy
   Perform the test and check that monitoring continues normally.

8. Switch the monitor to standby. Connect a Datex-Ohmeda gas monitor to the UPI4(NET) board using the UPI Interface cable P/N 887245 (44-pin connector is left disconnected). Switch both monitors on and set the interface according to the interfaced gas monitor:
   Monitor Setup - ***Install / Service*** (password 16-4-34) ***- Installation - Interfacing -Gases / Spiro -SpO2***
   Check that numerical data regarding the interfaced parameters appears onto the monitor screen.

NET functions

9. Check the Network cable extension:
   –the cable is intact
   –the cable connectors are clean and intact
   –the claw for locking the cable to the Network Board is intact
   Connect the Network cable extension to the UPI4NET board.

10. Check that the Mon-Net cable connector and the Identification plug are clean and intact, then connect them to the UPI4NET board.
    Check that the monitor connects onto the Datex-Ohmeda Network, i.e. the network symbol appears under the clock on the upper right hand corner of the screen.
    A message regarding the connected Datex-Ohmeda Central should appear into the message field of the screen.
    NOTE: If the network symbol does not appear, check the status of the network.

11. Enter the service menu.
    Frame- Network
    Take down the monitor's Ethernet address that is shown beside the text "Address".

12. Check that the service menu counters for the received ("In") and transmitted ("Out") data are updated frequently.

13. Check that the counters for data errors ("CRC", "Frame", "Transm.") are stable.
    NOTE: The counters may show values higher than 0. However, if any of the values is increasing continuously, it indicates a problem.

14. Check that the counters for hardware errors (“Intern.”, “Missed”, “FIFO”, “Overrun”) show all 0. If any of the counters show a value higher than 0, replace the UPI4NET board.

15. Disconnect the Mon-Net cable from the Network cable extension. Check that the message “Network down:” appears into the message field within 30 seconds. Reconnect the Mon-Net cable and check that the monitor connects onto the network again.

16. Switch the monitor to standby. Disconnect the Identification plug from the UPI4NET board. Switch the monitor back on and check that the message “Check network connectors” appears into the message field. Reconnect the Identification plug and check that the monitor connects onto the network.

General

17. Perform electrical safety check and leakage current test.
18. Check that the Network Board functions normally after the performed electrical safety check.

- Fill in all necessary documents.

4 TROUBLESHOOTING

4.1 Troubleshooting for the NET section

Symptom at the monitor end	Problem at	Explanation / correction
Monitor does not connect to the network. Monitor connects to the network, but disconnects unexpectedly ('Network connection down' message on the monitor screen).	Patch panel	Patch cable not connected to HUB or to panel.
	Patch cable	Patch cable or connector defective.
		HUB not connected to power supply.
		HUB port closed due to physical layer problems.
		HUB port temporarily closed and reopened due to physical layer problems.
		Hubs not properly connected to each other.
	Monitor-Network cable	Cable not properly connected to the wallplate or to the monitor.
	Monitor-Network cable	Cable or connector defective.
	UPI4NET board	The UPI4NET board is defective. The board cannot be used. See network service page for details.
	UPI4NET board EEPROM	The EEPROM of the UPI4NET board is defective or uninitialized. The board cannot be used. See network service page for details.
	Identification plug	There is no Identification plug attached to the monitor.
		The identification plug is defective or uninitialized. The plug cannot be used.
'Network EEPROM Error' message shows on the monitor screen	UPI4NET board EEPROM	The EEPROM of the UPI4NET board is defective or uninitialized. The board cannot be used. See Network service page for details.
'Check network connectors' message shows on the monitor screen	Monitor-Network cable	Cable not properly connected to the wallplate or to the monitor.

Symptom at the monitor end	Problem at	Explanation / correction
		Cable or connector defective.
	Identification plug	There is no identification plug properly attached to the monitor.
		The Identification plug is defective or uninitialized. The plug cannot be used. See network service page for details.
‘Network board error’ message shows on the monitor screen	UPI4NET board	The UPI4NET board is defective. The board cannot be used. See network service page for details.
	UPI4NET board EEPROM	The EEPROM of the UPI4NET board is defective or uninitialized. The board cannot be used. See network service page for details.
Other Site View shows no waveforms	No waveforms are set up for Monitor-to-Monitor communication	Run S/5 Network Setup to verify current Monitor-to-Monitor communication setup.
Network printing fails	Print server is busy	Network manager's print server is busy at the moment and cannot take more print jobs. Try again after 15 seconds.
	Print queue is full	There are too many unprinted documents waiting in the print queue. Check the printer, as it is not operating properly.
	Printer is off-line	Printer cable is loose, printer is out of paper, there is paper jam or the printer is simply switched to off-line state.
Record keeper menus are blank	There are no menus for the record keeper	Run S/5 Network Setup to verify the current set up.

4.2 Troubleshooting for the UPI section

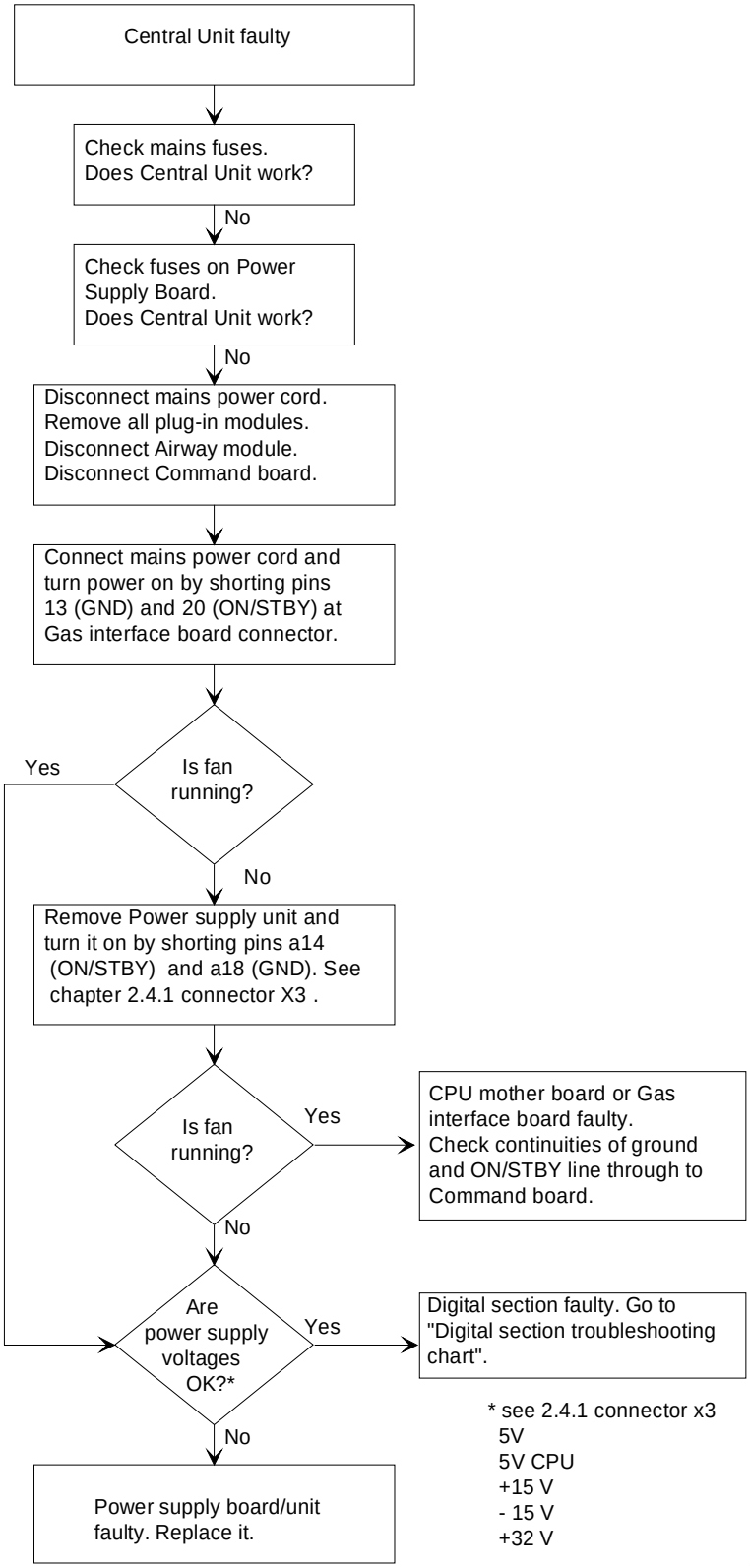

5 SERVICE MENU

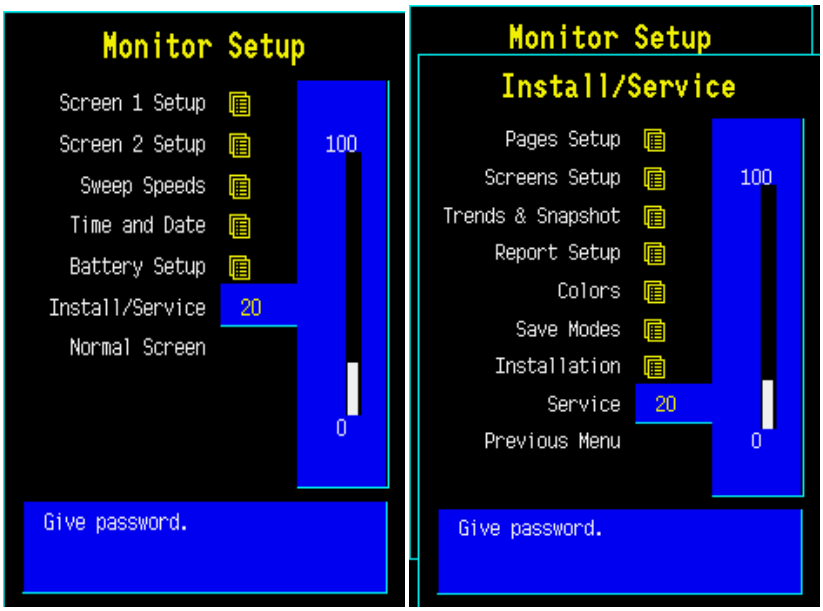

To enter the ***Network Service Menu***:

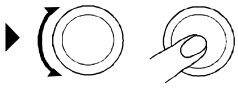

1. Press the **Monitor Setup** key.
2. Select ***Install/Service*** (password 16-4-34).
3. Select ***Service*** (password 26-23-8).
4. Select ***Frame- Network***.

5.1 Network menu

The **Communication** view shows the general status of the network communication. The four **Network status** menus are related to the four subnet id:s that the monitor is connected to. **The DRI Level** is for setting the monitor's network communication. The network communication is set according to the used network software (e.g. S-CNET01). The **Connections** field represents the network status menus respectively. The three first connections are reserved permanently for Datex-Ohmeda Central and the fourth is reserved for another subnet id, e.g. Datex-Ohmeda CS/3 Arrhytmia Workstation. The service data related to the communication view is described in the table below.

Value	Usage	Notes
Received packets (Statistics In/Packets)	Total number of received packets since last cold start.	
Transmitted packets (Statistics Out/Packets)	Total number of transmitted packets since last cold start.	
Received bytes (Statistics In/Bytes)	Total number of received bytes since last cold start	
Transmitted bytes (Statistics In/Bytes)	Total number of transmitted bytes since last cold start	
CRC errors (CRC)	Number of received packets with incorrect checksum	
Frame errors (Frame)	Number of received packets with incorrect frame structure	Refers to physical layer problems. An erroneous packet often has both frame and CRC error.
Transmission errors (Transm.)	Number or errors in packet Transmission	
Internal errors (Intern.)	Internal error of the network Board.	Must always be 0.
Missed packets (Missed)	Number of received packets Lost due to overload	Must always be 0
FIFO errors (FIFO)	Internal error of the network Board	Must always be 0
Overrun errors (Overrun)	Practically same as above	Must always be 0
Location ID	Monitor’s location given at the Setup	
Address	Monitor’s ethernet address	
Connections	Names of subnet id:s connected	

5.1.1 Network status

The network view gives more accurate information of the different subnet id:s connected. All four ***Network status*** menus have similar structure. The number of different packets transmitted and received by the monitor are shown in the columns below Tx and Rx. The packet types are described in the table below.

Waveforms Waveform data
Phys. data Physiological numerical data
Alarms Alarms, alarm profiles and alarm limits
Link mgmt Network management messages
Record K Record Keeper data
MonToMon Monitor-to-monitor communication related data
Printer Printing data and control messages
File Op. File operation messages, saving and loading of cases
Service Maintenance and service
Modes User mode data
Indics. Remote indications sent to monitor
RemoteEv Remote events
Data server Packets of the data server (Arrhythmia Workstation)
Packets total Total number of packets sent/received
Bytes total Total number of bytes sent/received

5.2 Communication

A service menu for showing information about internal RS-485 and external RS-232 communication.

Module Bus (RS485) view shows information related to the module bus.

UPI ints shows the number how many times the CPU board has sent an interrupt to UPI board. The running number should rise at a frequency of at least 100 Hz. If the numbers don't rise there is trouble with the interrupt line between CPU board and UPI board or with the boards themselves.

The 10 ms tick shows how many 10 ms intervals the UPI microprocessor has been on after last UPI reset. The UPI microprocessor counts the 10 ms intervals. The number must be running all the time at the frequency of 100 Hz. If the number doesn't rise, the problem is in the UPI board.

Serial I/O (RS-232) view shows information about the communication through the UPI board RS232 serial connector X8.

Interface status shows whether the interface through the connector is **OPENED**, **ACTIVE** or **CLOSED**. Opened indicates that the hardware and software for the interface is running but there is no connection or that there have been errors in using the interface. Active indicates that the interface is operating normally. Closed indicates that the necessary hardware is not present.

Statistics In/Out show the numbers of received and transmitted data packets and data bytes.

Rx errors show the number of received erroneous data packets.

6 SPARE PARTS

UPI4NET Board, B-UPI4NET rev.00, UPI4 Board, B-UPI4 rev.00

Item description	Order No.
Block screw for cables	546096

7 EARLIER REVISIONS

This manual supports only UPI4 Board, B-UPI4 and UPI4NET Board, B-UPI4NET.

See information related to earlier revisions of UPI board from main manual 896624 and slot 895704-1.

APPENDIX A

SERVICE CHECK FORM

UPI4(NET) Board, B-UPI4(NET)

Customer _____

Service _____ Board type _____ S/N _____

Service engineer _____ Date _____

☐ OK = Test OK ☐ N.A. = Test not applicable ☐ Fail = Test Failed

General

	OK	N.A.	Fail		OK	N.A.	Fail
1. UPI4(NET) board connectors	☐	☐	☐	2. PC board components and IC attachment	☐	☐	☐
3. Screws	☐	☐	☐	4. Grounding plate	☐	☐	☐

Notes _____

UPI functions

5. Parameter data and waveforms	☐	☐	☐	6. Voltage and temperature	☐	☐	☐
7. Watchdog	☐	☐	☐	8. Data of interfaced parameters	☐	☐	☐

Notes _____

NET funtions

9. Network cable extension	☐	☐	☐	10. Mon-Net cable and ID-plug	☐	☐	☐
11. Ethernet address	Address						
12. "In ", "Out" data counters	☐	☐	☐	13. Data error counters	☐	☐	☐
14. Hardware error counters	☐	☐	☐	15. Regocnition of disconnection	☐	☐	☐
16. Recognition of ID-plug	☐	☐	☐				

Notes _____

General

17. Electrical safety check ☐ ☐ ☐

18. Functioning after electrical safety check ☐ ☐ ☐

Notes _____

Notes _____

_____

_____

_____

Used Spare Parts _____ _____ _____

_____ _____ _____ _____

Signature _____