PLUM XL™ Series Infusion Systems

For use with the following list numbers:

Plum XL	**11555-04, 12570-04**
LifeCare XL	**11555-09, 11555-13, 11555-27, 11555-29, 11555-36, 11555-46, 11555-54, 11555-88**
Plum XLM	**11846-04**
LifeCare XLM	**11846-09, 11846-27, 11846-29, 11846-36, 11846-42, 11846-46, 11846-54, 11846-88**
Plum XLM with DataPort	**11859-04**
Plum XLM with DataPort Veterinary	**12570-04**
LifeCare XLM with DataPort	**11859-09, 11859-27, 11859-29, 11859-36, 11859-42, 11859-54, 11859-63, 11859-69, 11859-71, 11859-88**

Technical Service Manual

Hospira

430-00587-008 (Rev. 2/05)

© 2005 Hospira, Inc.

This document and the subject matter disclosed herein are proprietary information. Hospira retains all the exclusive rights of dissemination, reproduction, manufacture, and sale. Any party using this document accepts it in confidence, and agrees not to duplicate it in whole or in part nor disclose it to others without the written consent of Hospira.

Change History

Part Number		Description of Change	Remove and Destroy Pages	Insert Change Pages
430-00587-001 (	. 11/93)	O , _ ,		
430-00587-002 (	. 7/94)	• , ,		
430-00587-A02 (	. 11/94)	_ , •	C•	C•
		_ , C _ , H •	,	,
		A , , • • 59-1 • _ 6-2	6-7 • 6-10	6-7 • 6-10
430-00587-003 (	. 2/96)	, ,		
430-00587-004 (	. 12/97)	F• ,		
430-00587-005 (	. 2/99)	F , ,		
		_ , _ 5-1		
		I , , _ • _ D _ P• •		
430-00587-006 (	. 10/99)	,		
		I , , , _ _ _ • _ •		
430-00587-007 (	. 08/01)	,		
		_ , P • 5		
		_ , _ • , • 7		
		_ , IPB , _ • 9		
430-00587-008 (	. 2/05)	E , ,		
		I • •_ , H• _ _ _ ,		
		I , , IEC 60601-1-2 _ • A , _ , • , • , _ ,_		
		_ , _ • , • 7		
		_ , IPB , _ • 9		

Contents

Section 1

INTRODUCTION 1-1
1.1 SCOPE 1-1
1.2 GLOBAL PRODUCT CONFIGURATIONS 1-2
1.3 CONVENTIONS 1-5
1.4 COMPONENT DESIGNATORS 1-6
1.5 ACRONYMS AND ABBREVIATIONS 1-6
1.6 USER QUALIFICATION 1-7
1.7 ARTIFACTS 1-8
1.8 INSTRUMENT INSTALLATION PROCEDURE 1-8
1.8.1 UNPACKING 1-8
1.8.2 INSPECTION 1-9
1.8.3 SELF TEST. 1-9

Section 2

WARRANTY 2-1

Section 3

SYSTEM OPERATING MANUAL 3-1

Section 4

THEORY OF OPERATION 4-1
4.1 GENERAL DESCRIPTION 4-1
4.2 ELECTRONICS OVERVIEW 4-2
4.2.1 POWER SUPPLY PWA 4-2
4.2.1.1 SWITCHER CIRCUITRY 4-2
4.2.1.2 VOLTAGE REGULATOR CIRCUITRY 4-3
4.2.1.3 BATTERY CHARGER CIRCUITRY 4-4
4.2.2 POWER SUPPLY PWA 4-5
4.2.2.1 SWITCHER CIRCUITRY 4-5
4.2.2.2 VOLTAGE REGULATOR CIRCUITRY 4-6
4.2.2.3 BATTERY CHARGER CIRCUITRY 4-6
4.2.3 MCU PWA. 4-7
4.2.3.1 WATCHDOG CIRCUITRY 4-7
4.2.3.2 SERIAL COMMUNICATION CIRCUITRY 4-7
4.2.3.3 ALARM CIRCUITRY (XL) 4-8
4.2.3.4 ALARM CIRCUITRY (XLM) 4-8
4.2.3.5 ALARM POWER BACKUP CIRCUITRY 4-8
4.2.3.6 MOTOR DRIVER CIRCUITRY 4-9
4.2.3.7 PIN DETECTOR CIRCUITRY 4-9
4.2.3.8 UART (XLM WITH DATAPORT) 4-9
4.2.3.9 NURSE CALL ALARM (XLM WITH DATAPORT - NURSE CALL) 4-10
4.2.4 BUZZER PWA (XLM) 4-10
4.2.4.1 HIGH VOLUME AUDIBLE ALARM 4-10
4.2.4.2 LOCKOUT SWITCH 4-11
4.2.5 DISPLAY PWA 4-11
4.2.5.1 DISPLAY CIRCUITRY (XL) 4-11
4.2.5.2 DISPLAY CIRCUITRY (XLM DISPLAY PWA -003 AND LOWER) 4-11

4.2.5.3 DISPLAY CIRCUITRY (XLM DISPLAY PWA -004 AND HIGHER) . . . 4-11
4.2.5.4 EL PANEL DRIVER CIRCUITRY (XL) . . . 4-12
4.2.5.5 LED BACKLIGHT PANEL AND DRIVER (XLM) . . . 4-12
4.2.5.6 RUN INDICATOR CIRCUITRY . . . 4-12
4.2.5.7 LINE POWER INDICATOR CIRCUITRY . . . 4-12
4.2.5.8 CONTROL KNOB CIRCUITRY (XL) . . . 4-13
4.2.5.9 CONTROL KNOB CIRCUITRY (XLM) . . . 4-13
4.2.6 SENSOR PWA . . . 4-13
4.2.6.1 PRESSURE AMPLIFIER/FILTER CIRCUITRY . . . 4-13
4.2.6.2 AC AMPLIFIER CIRCUITRY . . . 4-14
4.2.6.3 VOLTAGE REFERENCE CIRCUITRY . . . 4-14
4.2.6.4 OPTO INTERRUPTER CIRCUITRY . . . 4-14
4.2.6.5 EEPROM CIRCUITRY . . . 4-14
4.2.7 BUBBLE SENSOR PWA . . . 4-14
4.2.7.1 TRANSMITTER CIRCUITRY . . . 4-15
4.2.7.2 RECEIVER CIRCUITRY . . . 4-15
4.2.7.3 PIN DETECTOR FLEX CIRCUITRY . . . 4-15
4.3 MECHANICAL OVERVIEW . . . 4-16
4.3.1 CASSETTE . . . 4-16
4.3.2 MECHANISM ASSEMBLY . . . 4-18
4.3.2.1 MOTOR AND VALVE ASSEMBLIES . . . 4-19
4.3.2.2 PRIMARY/SECONDARY VALVE SUBSYSTEM . . . 4-19
4.3.2.3 INLET/OUTLET VALVE SUBSYSTEM . . . 4-20
4.3.2.4 PLUNGER DRIVE SUBSYSTEM . . . 4-20

Section 5

MAINTENANCE AND SERVICE TESTS . . . 5-1
5.1 ROUTINE MAINTENANCE . . . 5-1
5.1.1 INSPECTING THE INFUSION SYSTEM . . . 5-1
5.1.2 CLEANING THE INFUSION SYSTEM . . . 5-1
5.1.3 SANITIZING THE INFUSION SYSTEM . . . 5-2
5.1.4 CLEANING THE BUZZER . . . 5-3
5.2 PERFORMANCE VERIFICATION TEST . . . 5-4
5.2.1 EQUIPMENT REQUIRED . . . 5-4
5.2.2 ICONS AND ENGLISH LANGUAGE EQUIVALENTS . . . 5-5
5.2.3 INSPECTION . . . 5-6
5.2.4 TEST SETUP . . . 5-6
5.2.5 SELF TEST . . . 5-7
5.2.6 KEYPAD AND CONTROL KNOB TEST . . . 5-8
5.2.7 OPEN DOOR ALARM TEST . . . 5-9
5.2.8 ALARM LOUDNESS TEST (XL) . . . 5-9
5.2.9 ALARM LOUDNESS AND LOCK FUNCTION TESTS (XLM) . . . 5-9
5.2.10 BATTERY LEGEND TEST . . . 5-10
5.2.11 FREE FLOW TEST . . . 5-10
5.2.12 PROXIMAL OCCLUSION TEST . . . 5-10
5.2.13 DISTAL OCCLUSION TEST . . . 5-11
5.2.14 DELIVERY ACCURACY TEST . . . 5-12
5.2.15 EMPTY CONTAINER/AIR-IN-LINE ALARM TEST . . . 5-12
5.2.16 ELECTRICAL SAFETY TEST . . . 5-13
5.2.17 END OF PERFORMANCE VERIFICATION TEST . . . 5-14
5.3 PERIODIC MAINTENANCE INSPECTION . . . 5-14
5.4 BATTERY OPERATION OVERVIEW . . . 5-14
5.4.1 BATTERY CHARGER CURRENT TEST (OPTIONAL) . . . 5-15
5.5 DATAPORT CONNECTION AND GROUND CONTINUITY TEST (OPTIONAL) . . . 5-16
5.6 NURSE CALL FUNCTION TEST (OPTIONAL) . . . 5-18

Section 6

TROUBLESHOOTING 6-1
6.1 TECHNICAL ASSISTANCE. 6-1
6.2 ALARM MESSAGES AND ERROR CODES 6-1
6.2.1 OPERATIONAL ALARM MESSAGES 6-2
6.2.2 ERROR CODES REQUIRING TECHNICAL SERVICE 6-6
6.2.3 SERVICE MODE 6-11
6.2.3.1 ALARM HISTORY 6-11
6.2.3.2 SOFTWARE REVISION NUMBER 6-12
6.2.3.3 RUN TIME AND BATTERY RUN TIME 6-12
6.2.3.4 PARAMETER PROGRAMMING (XLM WITH DATAPORT) 6-12
6.3 TROUBLESHOOTING PROCEDURES. 6-14

Section 7

REPLACEABLE PARTS AND REPAIRS 7-1
7.1 REPLACEABLE PARTS 7-1
7.2 REPLACEMENT PROCEDURES 7-3
7.2.1 SAFETY AND EQUIPMENT PRECAUTIONS 7-3
7.2.2 REQUIRED TOOLS AND MATERIALS 7-3
7.2.3 RUBBER FOOT PAD REPLACEMENT 7-4
7.2.4 BATTERY WITH WIRE HARNESS ASSEMBLY, BATTERY DOOR, AND BATTERY DOOR PAD REPLACEMENT 7-6
7.2.5 SEPARATING THE FRONT ENCLOSURE ASSEMBLY, REAR ENCLOSURE ASSEMBLY, AND MAIN CHASSIS ASSEMBLY 7-7
7.2.6 FRONT ENCLOSURE ASSEMBLY, REAR ENCLOSURE ASSEMBLY, OR MAIN CHASSIS ASSEMBLY REPLACEMENT 7-9
7.2.7 FRONT ENCLOSURE ASSEMBLY COMPONENT REPLACEMENT . . . 7-10
7.2.7.1 DISPLAY PWA AND MCU/DISPLAY CABLE REPLACEMENT 7-11
7.2.7.2 FRONT PANEL KEY REPLACEMENT 7-12
7.2.7.3 CONTROL KNOB, KNOB DETENT, WASHER, GASKET, SNAP RETAINER, AND DETENT RING REPLACEMENT 7-13
7.2.7.4 FRONT PANEL LABEL REPLACEMENT 7-14
7.2.8 REAR ENCLOSURE ASSEMBLY COMPONENT REPLACEMENT . . . 7-14
7.2.8.1 FUSE REPLACEMENT 7-15
7.2.8.2 POWER SUPPLY PWA REPLACEMENT 7-17
7.2.8.3 VELCRO RETAINER STRAP REPLACEMENT 7-19
7.2.8.4 AC (MAINS) POWER CORD AND STRAIN RELIEF BUSHING REPLACEMENT 7-19
7.2.8.5 AC (MAINS) POWER CORD REPLACEMENT (INTERNATIONAL) 7-21
7.2.8.6 AC RECEPTACLE, EMI SHIELD, AND EQUIPOTENTIAL POST REPLACEMENT 7-22
7.2.8.7 LIFECARE AC RECEPTACLE, BRACKET, GASKET, SEAL, AND EQUIPOTENTIAL POST REPLACEMENT 7-23
7.2.8.8 DATAPORT/MCU CABLE ASSEMBLY REPLACEMENT (XLM WITH DATAPORT) 7-25
7.2.8.9 LIFECARE DATAPORT/MCU CABLE ASSEMBLY REPLACEMENT (XLM WITH DATAPORT) 7-27
7.2.8.10 POLE CLAMP EXTRUSION, POLE CLAMP BACKING PLATE, AND ADHESIVE-BACKED INSULATOR REPLACEMENT . . . 7-28
7.2.8.11 POLE CLAMP SHAFT/KNOB ASSEMBLY AND POLE CLAMP SHAFT TIP REPLACEMENT 7-30
7.2.8.12 BUZZER PWA AND MCU/BUZZER CABLE REPLACEMENT 7-31

7.2.9 MAIN CHASSIS ASSEMBLY COMPONENT REPLACEMENT 7-32
7.2.9.1 MCU PWA AND SENSOR/MCU CABLE ASSEMBLY REPLACEMENT 7-33
7.2.9.2 MECHANISM ASSEMBLY REPLACEMENT 7-35
7.2.9.3 CASSETTE DOOR AND MECHANISM SHIELD REPLACEMENT 7-36
7.2.9.4 OPENER HANDLE ASSEMBLY REPLACEMENT 7-41

Section 8
SPECIFICATIONS 8-1
8.1 PLUM XL AND XLM 8-1
8.2 LIFECARE XL AND XLM 8-2

Section 9
DRAWINGS 9-1

Appendix A-1

Index I-1

Figures

Figure 1-1. Plum XL Icon Based and English Language Front Panels 1-4
Figure 1-2. Plum XLM Icon Based and English Language Front Panels 1-4
Figure 1-3. Plum XL LCD Test Screens 1-10
Figure 1-4. Plum XLM LCD Test Screens. 1-10
Figure 4-1. Major Elements of the Dual-Channel Cassette. 4-17
Figure 4-2. Fluid Path in the Cassette 4-18
Figure 4-3. Mechanism Valve Pins and Sensor Locations 4-20
Figure 5-1. Cleaning the Buzzer 5-3
Figure 5-2. Icons and English Language Equivalents 5-5
Figure 5-3. Plum XL LCD Test Screens 5-7
Figure 5-4. Plum XLM LCD Test Screens. 5-8
Figure 5-5. Distal Occlusion Test Setup 5-11
Figure 5-6. Special Cassettes with Bubble Sensor Tips Removed 5-13
Figure 5-7. Battery Charger Current Test Configuration 5-16
Figure 5-8. DataPort Connector 5-17
Figure 7-1. Bottom View of the Infusion System 7-5
Figure 7-2. Front Enclosure, Main Chassis Assembly, and Rear Enclosure 7-8
Figure 7-3. Display PWA and MCU/Display Cable 7-10
Figure 7-4. Front Enclosure Assembly Components 7-11
Figure 7-5. Fuse Replacement (115 VAC) 7-16
Figure 7-6. Fuse Replacement (220 VAC) 7-16
Figure 7-7. Power Supply PWA 7-18
Figure 7-8. AC Power Cord (115 VAC - Plum XL) 7-20
Figure 7-9. AC Power Cord (115 VAC - Plum XLM) 7-21
Figure 7-10. AC Power Cord (220 VAC - Plum XLM) 7-23
Figure 7-11. AC Power Cord (220 VAC - Plum XLM) 7-24
Figure 7-12. DataPort Assembly (Domestic) 7-26
Figure 7-13. DataPort Assembly (International) 7-28
Figure 7-14. XL Series Pole Clamp 7-30
Figure 7-15. Buzzer PWA 7-32
Figure 7-16. Exploded View of the Main Chassis Assembly 7-34
Figure 7-17. Top View of the Main Chassis Assembly 7-35
Figure 7-18. Mechanism Shield Replacement 7-38
Figure 7-19. Cassette Door Replacement (1 of 3). 7-39
Figure 7-20. Cassette Door Replacement (2 of 3). 7-39
Figure 7-21. Cassette Door Replacement (3 of 3) 7-40
Figure 7-22. Cassette Door Replacement, Bottom View 7-40
Figure 7-23. Opener Handle Assembly Replacement (1 of 3) 7-42
Figure 7-24. Opener Handle Assembly Replacement (2 of 3) 7-43
Figure 7-25. Opener Handle Assembly Replacement (3 of 3) 7-43
Figure 9-1. Illustrated Parts Breakdown 9-7
Figure 9-2. Front Enclosure, Rear Enclosure, and Main Chassis Assemblies 9-11
Figure 9-3. Front Enclosure Assembly 9-13
Figure 9-4. Rear Enclosure Assembly (XL Domestic). 9-15
Figure 9-5. Rear Enclosure Assembly (XL International) 9-17
Figure 9-6. Rear Enclosure Assembly (XLM Domestic) 9-19
Figure 9-7. Rear Enclosure Assembly (XLM International) 9-21
Figure 9-8. Rear Enclosure Assembly (XLM with DataPort - Domestic) 9-23
Figure 9-9. Rear Enclosure Assembly (XLM with DataPort - International) 9-25
Figure 9-10. Rear Enclosure Assembly (Lifecare XLM with DataPort) 9-27
Figure 9-11. Main Chassis Assembly. 9-29
Figure 9-12. Battery Replacement 9-31
Figure 9-13. Mechanical Assembly 9-33

Figure 9-14. Plum XL Block Diagram 9-37
Figure 9-15. MCU PWA Schematic (XL) 9-39
Figure 9-16. MCU PWA Schematic (XLM) 9-43
Figure 9-17. MCU PWA Schematic (XLM with DataPort) 9-47
Figure 9-18. Display PWA Schematic (XL). 9-83
Figure 9-19. Display PWA Schematic (XLM) 9-85
Figure 9-20. Bubble Sensor PWA Schematic 9-99
Figure 9-21. Sensor PWA Schematic 9-105
Figure 9-22. Pin Detector Flex Circuit Schematic 9-107
Figure 9-23. Power Supply PWA Schematic (XL Domestic). 9-109
Figure 9-24. Power Supply PWA Schematic (XL International) 9-113
Figure 9-25. Power Supply PWA Schematic (XLM Domestic) 9-117
Figure 9-26. Power Supply PWA Schematic (XLM International) 9-121
Figure 9-27. Power Supply PWA Schematic (XLM with DataPort) 9-129
Figure 9-28. Buzzer PWA Schematic 9-137

Tables

Table 1-1. Global Product Configurations 1-2
Table 1-2. Conventions 1-5
Table 4-1. Battery Charge Current States 4-4
Table 5-1. Cleaning Solutions 5-2
Table 5-2. Battery Charger Current Test Parameters 5-16
Table 6-1. Operational Alarm Messages and Corrective Actions 6-2
Table 6-2. Error Codes Requiring Technical Service 6-6
Table 6-3. Service Mode Control Knob Settings 6-11
Table 6-4. Sub-Modes of Parameter Programming 6-12
Table 6-5. Communication Circuitry Selections 6-13
Table 6-6. PVT Troubleshooting 6-14
Table 7-1. Wire Color Coding 7-18
Table 9-1. Drawings 9-1
Table 9-2. IPB for the Infusion System 9-2
Table A-1. Guidance and Manufacturer's Declaration - Electromagnetic Emissions . . A-1
Table A-2. Guidance and Manufacturer's Declaration - Electromagnetic Immunity . . A-2
Table A-3. Guidance and Manufacturer's Declaration - Electromagnetic Immunity for Life-Supporting Equipment and Systems A-3
Table A-4. Recommended Separation Distances Between Portable and Mobile RF Communications Equipment and the LifeCare XLM with DataPort A-5

Section 1

INTRODUCTION

[illegible]

Note: [illegible]

Note: [illegible]

Note: [illegible]

1.1 SCOPE

[illegible]

- [illegible]
- [illegible]
- [illegible]
- [illegible]
- [illegible]
- [illegible]
- [illegible]
- [illegible]
- [illegible]
- [illegible]
- [illegible]
- [illegible]

[illegible] *(see Section 6.1, Technical Assistance)*.

Plum XL System Operating Manual, *Plum XL Micro/Macro System Operating Manual*, *Plum XL Micro/Macro with DataPort System Operating Manual*. P *Section 3* .

Note: I P L D

Note: F ;

1.2
GLOBAL PRODUCT CONFIGURATIONS

Table 1-1, Global Product Configurations. E *Figure 1-1, Plum XL Icon Based and English Language Front Panels* *Figure 1-2, Plum XLM Icon Based and English Language Front Panels*.

Table 1-1. Global Product Configurations

Group Icon	List Number	Country	Power Supply	Rear Case	LCD
	11555-04 11846-04 11859-04 12570-04	USA	100-130 VAC	Nondetachable AC (mains) power cord	English
	11555-13	French Canadian	100-130 VAC	Nondetachable AC (mains) power cord	Icons
	11555-88 11846-88 11859-88*	Spanish			
	11555-27 11846-27 11859-27*	Australia	210-260 VAC	Detachable AC (mains) power cord	English
	11555-54 11846-54 11859-54*	UK			
	11555-09 11846-09 11859-09*	Spanish (Latin America)	210-260 VAC	Detachable AC (mains) power cord	Icons

Table 1-1. Global Product Configurations					
Group Icon	**List Number**	**Country**	**Power Supply**	**Rear Case**	**LCD**
	11555-29 11846-29 11859-29*	French			
	11555-36 11846-36 11859-36*	Europe			
	11846-42 11859-42*	Italy			
	11555-46 11846-46	Swedish			
	11859-63*	Poland			
	11859-69*	Hungary			
	11859-71*	Czech Republic			

* C● IEC/EN 60601-1-2: 2001 ✓EN-2

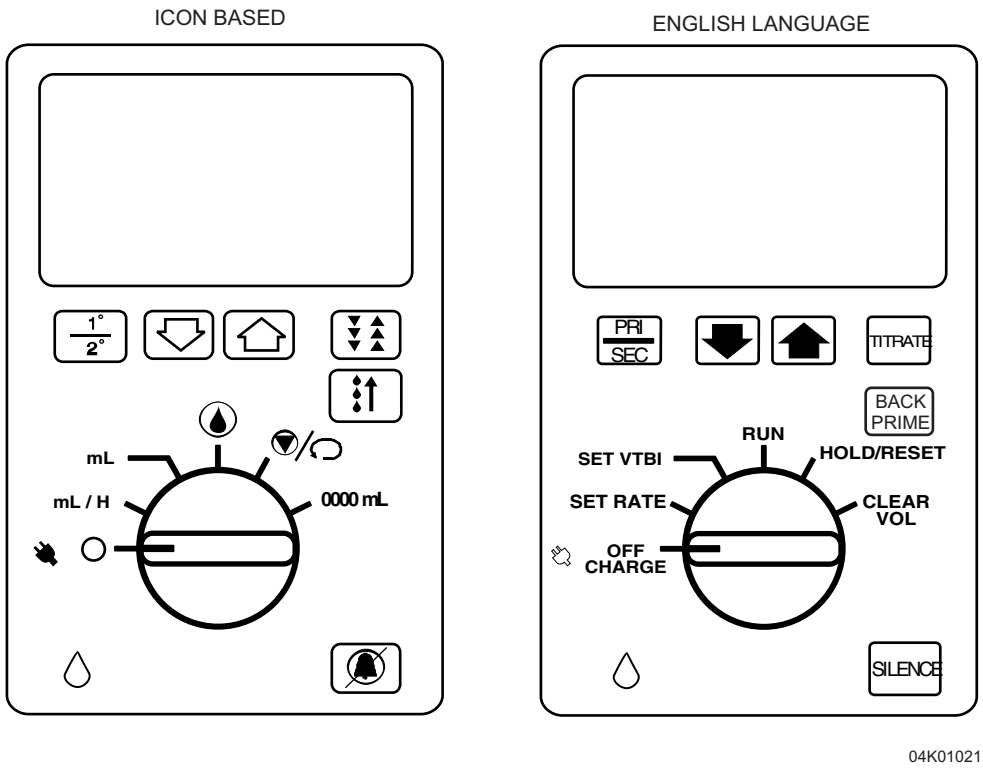

Figure 1-1. Plum XL Icon Based and English Language Front Panels

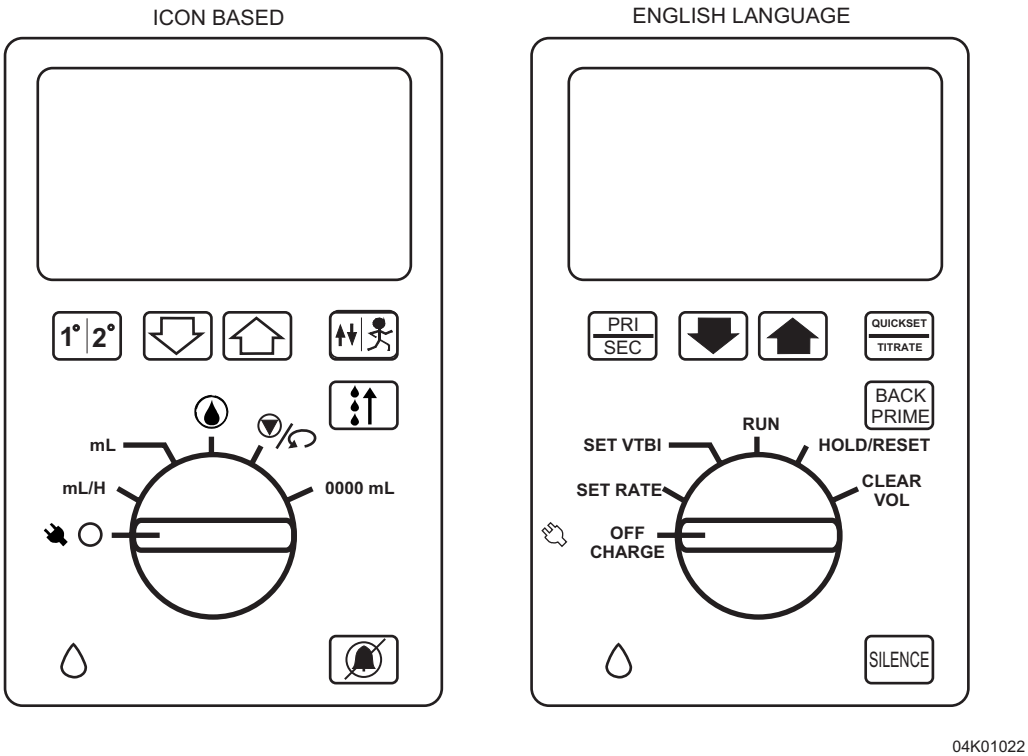

Figure 1-2. Plum XLM Icon Based and English Language Front Panels

1.3 CONVENTIONS

Table 1-2, Conventions

Table 1-2. Conventions

Convention	Application	Example
Italic	Reference to a section, figure, table, or publication	*(see Figure 5-4, Distal Occlusion Test Setup)*
[ALL CAPS]	In-text references to keys are described in all caps and enclosed in brackets	[TITRATE]
ALL CAPS Initial Caps with lowercase	Screen displays	DOOR/CASSETTE Self test in progress
Bold	Emphasis	**CAUTION: Use proper ESD grounding techniques when handling components.**

WARNING: A WARNING CONTAINS SPECIAL SAFETY EMPHASIS AND MUST BE OBSERVED AT ALL TIMES. FAILURE TO OBSERVE A WARNING MAY RESULT IN PATIENT INJURY AND IS POTENTIALLY LIFE THREATENING.

CAUTION: A CAUTION usually appears in front of a procedure or statement. It contains information that could prevent hardware failure, irreversible damage to equipment or loss of data.

Note: A

EN-2 : I IEC/EN 60601-1-2: 2001

1.4
COMPONENT DESIGNATORS

C :

B	**BT**	D	**D**		**R**
C	**C**	F	**F**		**SW**
C	**Y**	I C	**U**		**Q**

(., 1, 2).

Note: A (-) . F , 15-13 13 15 P A.

1.5
ACRONYMS AND ABBREVIATIONS

A :

A A
AC A
ACE A
AC RMS A
A/D A
CMOS C
CPU C
DC D
DMM D
DPM D
ECG E
EEG E
EEPROM E
EL E
EMG E
EMI E
ETO E
FET F
HKDC H DC
hr H
Hz H
IC I

IEC [illegible]

IPB [illegible]

IV [illegible]

kHz [illegible]

KVO [illegible]

LCD [illegible]

LED [illegible]

mA [illegible]

MCU [illegible]

MHz [illegible]

mL [illegible]

mV [illegible]

PLL [illegible]

PVT [illegible]

PSI [illegible]

PWA [illegible]

SPSTIN [illegible]

UART [illegible]

VAC [illegible] AC

VCO [illegible]

VCC [illegible]

VDC [illegible] DC

VDIG [illegible]

VMOT [illegible]

Vpp [illegible]

VTBI [illegible]

µA [illegible]

µL [illegible]

µS [illegible]

1.6 USER QUALIFICATION

[illegible]

1.7 ARTIFACTS

ECG, EMG, EEG

1.8 INSTRUMENT INSTALLATION PROCEDURE

CAUTION: Infusion system damage may occur unless proper care is exercised during product unpacking and installation. The battery may not be fully charged upon receipt of the infusion system. Do not place the infusion system in service if it fails the self test.

CAUTION: Infusion system performance may be degraded by electromagnetic interference (EMI) from devices such as electrosurgical units, cellular phones, and two-way radios. Operation of the infusion system under such conditions should be avoided.

CAUTION: Before operating the infusion system next to, or in a stacked configuration with other electrical equipment, confirm the infusion system's operational performance in that configuration.

CAUTION: The use of any accessory, transducer or cable with the LifeCare XLM with DataPort other than those specified may result in increased emissions or decreased immunity of the LifeCare XLM with DataPort.

Note: AC *(see Section 8, Specifications)*.

1.8.1 UNPACKING

Section 1.8.2, Inspection.

1.8.2 INSPECTION

I [illegible]

CAUTION: Do not use the infusion system if it appears to be damaged. Should damage be found, contact Hospira (*Sect 6.1, Technical Assistance*). Do not use the infusion system if it appears to be damaged.

I [illegible] A [illegible]

1.8.3 SELF TEST

CAUTION: Do not place the infusion system in service if the self test fails.

[illegible] *Figure 1-3, Plum XL LCD Test Screens* [illegible] *Figure 1-4, Plum XLM LCD Test Screens*, [illegible]:

1. C[illegible] AC ([illegible]) [illegible] AC ([illegible]) [illegible] AC ([illegible]) [illegible] ([illegible] OFF/CHA GE [illegible]) [illegible].
2. O [illegible] ([illegible]) [illegible].
3. H[illegible]. D[illegible].
4. C [illegible].
5. [illegible] E A E [illegible].
6. [illegible]:
   - LCD [illegible]
   - F[illegible] C ([illegible])
   - [illegible]
7. D [illegible] AC ([illegible]) [illegible] BA E [illegible] LCD [illegible].
8. [illegible] OFF/CHA GE [illegible].
9. [illegible] AC ([illegible]) [illegible] OFF/CHA GE [illegible]. C[illegible] AC ([illegible]) [illegible].

Note: I LCD *Figure 1-3* *Figure 1-4* H

Note: I *(see Section 6, Troubleshooting)*. I H

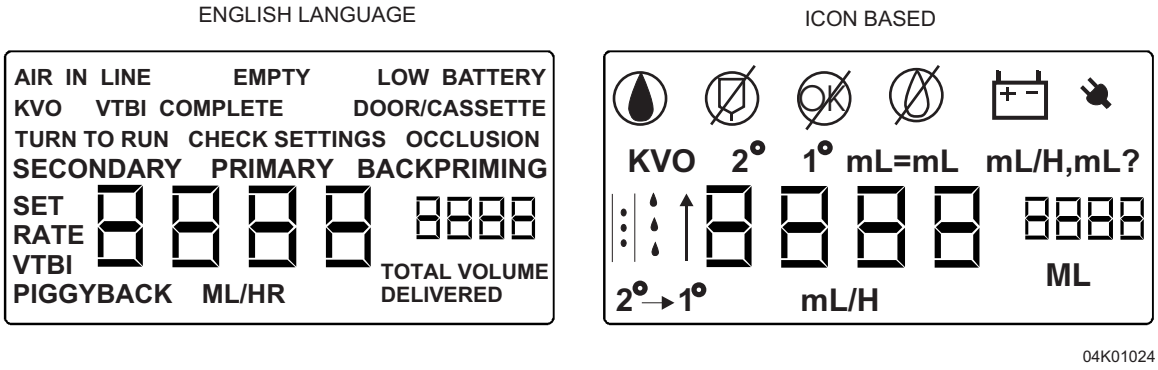

04K01024

Figure 1-3. Plum XL LCD Test Screens

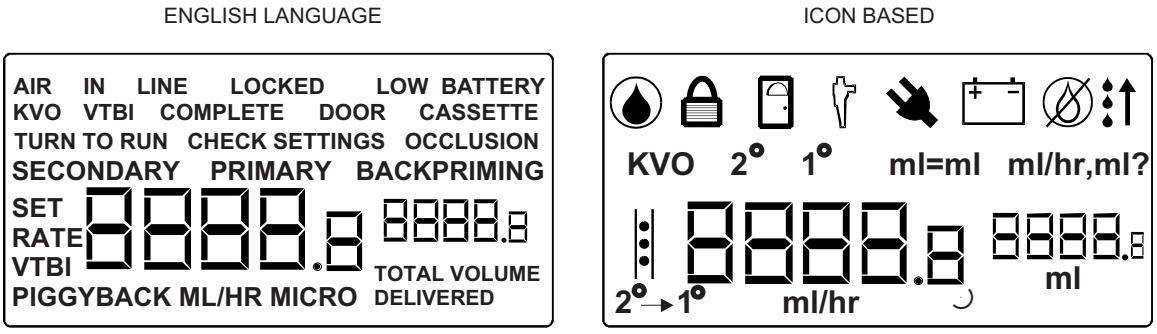

04K01025

Figure 1-4. Plum XLM LCD Test Screens

Note: A LCD 27 54.

Section 2

WARRANTY

Section 3

SYSTEM OPERATING MANUAL

A [illegible] *(see Section 6.1, Technical Assistance)*.

Section 4

THEORY OF OPERATION

Section 9, Drawings. 115 AC 220 AC

4.1
GENERAL DESCRIPTION

:

- (BI)
- :
  - M
  - F
- 1 999 L/ 1 L (L)
- F 0 99.9 L 0.1 L/ 100 999 L/ 1 L (LM)
- B
- (
- A
- A :
  - OCCL ION
  - AI -IN-LINE
  - N O N
  - LO BA E
  - DOO /CA E E (L)
  - DOO (LM)
  - CA E E (LM)
  - E A E
  - CHECK E ING
  - BI COMPLE E
- -
- D P (LM D P)
- N (LM D P - N C)

Note: D● ● ● D _ P● , , .

Note: N, _ _ _ ●_ _ _ IEC ● _ , . ✓EN-2

4.2 ELECTRONICS OVERVIEW

● , , ● _ , ● , ● _ , _ (P A) , ● :

- ❑ P● , P A
- ❑ M ● ● ● , (MC) P A
- ❑ D _ P A
- ❑ B, P A
- ❑ ● P A
- ❑ B, ● P A

_ , _ , _ , ● , ● _ ● ● , ● P A _ *Section 9, Drawings*.

4.2.1 POWER SUPPLY PWA

115 V

● , P A ● , , (DC) ● ● , _ , _ , _ *(see Figure 9-23, Power Supply PWA Schematic (XL Domestic), Figure 9-25, Power Supply PWA Schematic (XLM Domestic)* ● *Figure 9-27, Power Supply PWA Schematic (XLM with DataPort))*. ● , P A ● ● , , ●_ , , _ ● , _ , _ _ , . ● ● , ● , .

4.2.1.1 SWITCHER CIRCUITRY

115 V

_ , ● ● , ● ● _ _ , , AC (_) ● ●_ ●_ , +11 ● DC (DC). F, F1_ , F2,_ , _ _ ● 1 ● , ● ● _ _ AC (_) - , ●_ , (_ , ● , _ , . C _ ● C1_ , C2, _ ● 1,_ , , ● L1_ , _ ● , , ● . B , 1, ● 1, _ , _ _ ● C3 ● , DC ●_ , , ● , . D ● C 1_ , C 2, 2, 3, C 4, C4,_ , C9 ● , ●_ , ● , ● - ● ● , _ , , (IC) 2. _ ● 1, _ ● 2, IC 2,_ , _ ●_ , _ ● ● _ ● , _ , , ● ● _ , _ ● _ , (EMI). 2 ● ● , ● 1 ● , ● 5 _ , 6. ● 9 ● , , . ● 8_ , _ _ ● C7 , _ ●_ , _ ● 9_ , , _ (● 2.

2 DC 9 (E +) 9. DC 2 . 2-9 +1.25 DC 1 2 (A).

O 3 ; L-544 .

61, C 5, C6 2 9 2 . C6 2-4 2 .

D C 3 2 C3 1. A AC ( ) C12 2-14 ( ) .

D C 11 C23 C24 2 DC (+B) . D C 10, 23, IC 4, C19 +12 DC . D C 12 C25 C25 9 57 C 14. 9 DC (HKDC), HKDC AC ( ) C 12 58, 59, 60; C30, C31, C32; IC 9 HKDC +2.5 DC (F2.5).

21, 39, 44, 45; C27; 8B 3 7, 42, C 9 AC ( ) +B +9 DC.

4.2.1.2
VOLTAGE REGULATOR CIRCUITRY

115 V

DC . (MO) (8A, 5, 4,) +9.35 DC AC ( ) . 2 HKDC C 8 11 12. 2 3 PO E HOLD P IN (,) MO .

AC ( ) , 2 . I 4 P IN PO E HOLD. 2 , 4 MO +5 DC 5. IC 5, +5 DC , .

4.2.1.3

BATTERY CHARGER CIRCUITRY

6 8, IC 6B, 33, . 6 33 . AC ( ) , 8 6 .

(20). C LOCHG ( ), CH G OFF ( ), BA 2 (2). BA 2 J26-3 -4 (BA 2 2 J26). I , 10 .

Table 4-1, Battery Charge Current States, .

Note: *Table 4-1* 115 AC 220 AC .

Table 4-1. Battery Charge Current States

LOCHG Signal	CHRG_OFF Signal	J26-3 to J26-4	Approximate Current
Low	Low	Short	0.8 A
Low	Low	Open	1.2 A
High	Low	Short	0.16 A
High	Low	Open	0.25 A
Don't care	High	Don't care	Trickle = (11-Vbat)/475

IC 7A 6. 6 +2.5 DC 7-4, .

LOCHG E ( ) MC P A . LOCHG E IC 6A, 7B, 7C, 7D, .

IC 6A, 24 28, C20 . 7C. 7C LOCHG E . 7-13 -1 , .

4.2.2
POWER SUPPLY PWA

P A *Figure 9-24, Power Supply PWA Schematic (XL International)*, *Figure 9-26, Power Supply PWA Schematic (XLM International)*. P A :

- ❑ AC (_) . I
- ❑ AC (_) , . I
- ❑ AC (_) . I
- ❑ AC (_) , . I

4.2.2.1
SWITCHER CIRCUITRY

AC (_) +11 DC .

F F1 F2 1 2 . C C1, C2, C35, C36, C37, C38, 1, L1 . IC 1, 1, L1 C3 DC . D C 1, C 2, C 4, C 15; 22, 68, 73, 74; C4, C9, C34; 11, 12 DC IC 2, IC.

A L-544 1, 2, IC 2, EMI. O 3 L-544 .

IC 2 40 H 4 C5. 2 1 5 6, C 16. 9 8 C7 9 IC 2.

2 DC 9 (E +) 9. DC 2 +1.25 DC 1 1.25 DC 9.

6 72, C 5, C6 2 9 2 . C6 2-4 1.

D C 3 2 C3 1.

A AC ( ) C12 2-14 ( ) . D C 11, C18, C23, C24 2 DC . D C 10, 23, IC 4, C19 +12 DC . D C 12 C25 C25 9 57 C 14. 9 , DC (HKDC), . HKDC AC ( ) C 14 . 58 60, C30 C32, IC 9 HKDC +2.5 DC (F2.5). B HKDC F2.5 AC ( ) .

IC 8B, 7, 21, 39, 43 45, C27, IC 3 . 7, 42, C 9 AC ( ) +B +9 DC.

4.2.2.2

VOLTAGE REGULATOR CIRCUITRY

220 V

MO (8A, 5, 4) 9.35 DC AC ( ) .

2 HKDC C 9 11 12. 2 , 3 PO E HOLD P IN .

AC ( ) , 2 . I , 4 P IN PO E HOLD 3. 2 , 4 MO +5 DC 5. IC 5, +5 DC , .

4.2.2.3

BATTERY CHARGER CIRCUITRY

220 V

6 8, IC 6B, 33, . 6 33 . AC ( ) , 8 6 .

(20). C 6-6. IC 7A, 10, 31, 32, 34, 62, 63 6-6, . BA 2 ( ) J26 3 4, 2 J26. I , 10 .

IC 7A 6. 6 2.5 7-4, .

LOCHG E MC P A ; 6A, 7B, 7C, 7D .

IC 6A, 24 28, C20 7C. 7C LOCHG E . 7-13 7-1 , 1 2 .

4.2.3
MCU PWA

MC P A 6 *(see Figure 9-15, MCU PWA Schematic (XL), Figure 9-16, MCU PWA Schematic (XLM), Figure 9-17, MCU PWA Schematic (XLM with DataPort))*. MC P A . E . MC P A :

- ❑
- ❑
- ❑ A
- ❑ A
- ❑ M
- ❑ P
- ❑ / (A) (LM D P)

4.2.3.1
WATCHDOG CIRCUITRY

MC P A IC 14. 14 16 ; * E E . * E E (DIG) . * E E MC P A , .

4.2.3.2
SERIAL COMMUNICATION CIRCUITRY

MC P A (LCD) -(EEP OM).

A LCD EEP OM, . I EE C , * CK EE CLK IC 9C. I EE C , * CK LCD CLK IC 8B.

D LCD EEP OM. I EE C , EE DO D IC 7C. I EE C , LCD DO D IC 7C.

4.2.3.3
ALARM CIRCUITRY (XL)

10C, 10B, 10E. B 1 . N B E , 9-10 N8-7 N8-8 . B E * E E N8-7 . 1 LO, 13 B 1-3 ( ) . 10D 10F 10F .

A AC ( ) , PO E HOLD 10D/ 10F . A -, DI AI EN P O AI EN . DI AI EN P O AI EN . A .

D OFF/CHA GE.

4.2.3.4
ALARM CIRCUITRY (XLM)

10C, 10B, 10E. B 1 . N B E , 9-10 N8-7 N8-8 . B E * E E N8-7 . 10D 10F 10F .

A AC ( ) , PO E HOLD 10D/ 10F . A -, DI AI EN P O AI EN . DI AI EN P O AI EN . A .

D OFF/CHA GE.

. F , *see Section 4.2.4, Buzzer PWA (XLM).*

4.2.3.5
ALARM POWER BACKUP CIRCUITRY

C34. C34 . D C 15, C 19, C 20 10 DIG C34.

4.2.3.6
MOTOR DRIVER CIRCUITRY

[illegible]

4.2.3.7
PIN DETECTOR CIRCUITRY

[illegible]

4.2.3.8
UART (XLM WITH DATAPORT)

[illegible]

A
MC

Note: D D P

4.2.3.9

NURSE CALL ALARM (XLM WITH DATAPORT - NURSE CALL)

D 22, FE .
B E C 5.

15-
1/4

Note: N IEC . EN-2

Note: D D P

4.2.4

BUZZER PWA (XLM)

P A P, LM LM D P *(see Figure 9-28, Buzzer PWA Schematic)*. P A :

- ❑ H
- ❑ L

4.2.4.1

HIGH VOLUME AUDIBLE ALARM

I MC P A *(see Section 4.2.3.4, Alarm Circuitry (XLM))*. 1. 1 P A,

B E HI (CP) MC P A. P IN B P IN (+B) MC P A. P IN B B E HI. 1 ( ), 1 ( ), MC P A.

4.2.4.2
LOCKOUT SWITCH

2 P A LM. LOCKO 1 P A, LOCKO 2 MC P A. LOCKO 1 7 P A. 2 7 , LOCKO 2 LOCKED LCD .

4.2.5
DISPLAY PWA

P A MC P A LCD *(see Figure 9-18, Display PWA Schematic (XL), Figure 9-19, Display PWA Schematic (XLM))*. P A : (EL) (L), LED (LM), N ,

4.2.5.1
DISPLAY CIRCUITRY (XL)

IC 2 3 LCD 92- (4 - 23 -) . LCD 1 88 .

D 2 21. , LCD CLK, 2-23 3-22. 7. C 3, C14, 9, 8, 3.

4.2.5.2
DISPLAY CIRCUITRY (XLM DISPLAY PWA -003 AND LOWER)

IC 2 128 LCD 32 . LCD 4 110 .

D 2 DIN (39) DCLK (38). LCD (100 H) 7 2.

4.2.5.3
DISPLAY CIRCUITRY (XLM DISPLAY PWA -004 AND HIGHER)

IC 13 128 LCD 32 . LCD 4 110 .

D 13 DA A (58) CL (57). LCD (100 H) 31 13.

4.2.5.4

EL PANEL DRIVER CIRCUITRY (XL)

[illegible] 1 [illegible] 1 [illegible] 1-3 ([illegible]) [illegible] 4-2 ([illegible]) [illegible] 1 [illegible] (5, 8) [illegible] 300 [illegible] ([illegible]). [illegible] EL [illegible] EL1 [illegible] 1 [illegible] 300 H [illegible] 500 H . A [illegible] EL1 [illegible] .

A [illegible] C 1; [illegible] C13 [illegible] C10; [illegible] 13, 4, 3, [illegible] 6; IC 10B; [illegible] 2 [illegible] ELON [illegible] .

4.2.5.5

LED BACKLIGHT PANEL AND DRIVER (XLM)

[illegible] 60 LED [illegible] LED . [illegible] LED [illegible] 4.2 DC. [illegible] . D [illegible] .

[illegible] LM [illegible] 200 A [illegible] . [illegible] 7 [illegible] 11 [illegible] . [illegible] MO [illegible] .

C [illegible] 5, LED [illegible] 3 [illegible] 14, 23, [illegible] 24 [illegible] 96 . [illegible] 13 [illegible] C7 [illegible] 11 [illegible] 12. C [illegible] 3, 1 [illegible] 14, 23, [illegible] 24 [illegible] C4. 1 [illegible] C1 [illegible] 1.

1 [illegible] C4 [illegible] 9. 3 [illegible] C4 [illegible] 3, 2.

4.2.5.6

RUN INDICATOR CIRCUITRY

LED N, [illegible] LED1 [illegible] . IC 10A (8 LM) [illegible] LED1 [illegible] 20. [illegible] +3.33 DC.

4.2.5.7

LINE POWER INDICATOR CIRCUITRY

HKDC [illegible] AC ([illegible]), [illegible] , LED2. HKDC [illegible] 4 [illegible] DIG + [illegible] 15 ([illegible] C 1). [illegible] 4 [illegible] LED2 [illegible] DIG [illegible] 14.

4.2.5.8
CONTROL KNOB CIRCUITRY (XL)

[illegible]

4.2.5.9
CONTROL KNOB CIRCUITRY (XLM)

[illegible]

4.2.6
SENSOR PWA

[illegible]

4.2.6.1
PRESSURE AMPLIFIER/FILTER CIRCUITRY

[illegible]

4.2.6.2

AC AMPLIFIER CIRCUITRY

AC ( ) (IC 8A) DI P E MC P A (A/D) . AC AC (7 C 1 C 3), / (C8 10), (IC 8B, 4 9, C7). AC ( ) +2.5 DC.

4.2.6.3

VOLTAGE REFERENCE CIRCUITRY

IC 1 6; 1; C 2 C 5; 17 20, 22, 23; C9, C11, C12. 22, C11, C12 MO . 18 1. 6B +2.5 DC EF. +2.5 DC EF 1, 6A, +3.75 DC 3 75 EF. C 2 3 75 EF DIG MC P A , 6. C 5 1.

4.2.6.4

OPTO INTERRUPTER CIRCUITRY

P EN EN , 2 3 LED IC 2, 3, 4 22 (A). 24 .

4.2.6.5

EEPROM CIRCUITRY

EEP OM (IC 5) MC P A. 5 3 D. 4 EE DO. EE C 1 EE CLK (2) D, 5 .

4.2.7

BUBBLE SENSOR PWA

P A : (,) *(see Figure 9-21, Sensor PWA Schematic, Figure 9-22, Pin Detector Flex Circuit Schematic).*

Note: B .

4.2.7.1

TRANSMITTER CIRCUITRY

(CO),

(IC 1A 2, C5, 15 18) 12 H 50 . A CMO 2 (C2) +2 DC +3 DC. C2 CO 2-9.

IC 2, C7, 21 CO. 2 (PLL) IC CO 4 MH 6 MH . CO 21 C7. A P O AI EN DI AI EN, CO.

: 4 5. 1 2.

4.2.7.2

RECEIVER CIRCUITRY

3, 6, 2, 2 5 EF 3 P O AI EN 1. 6 DI AI EN 2.

1. 1 C C1 4 200 ( ). 40 , (*AI OP)

(IC 1A 7 2)

4.2.7.3

PIN DETECTOR FLEX CIRCUITRY

C 1 C 2, 1 2. L MC P A P A.

4.3
MECHANICAL OVERVIEW

4.3.1
CASSETTE

(see Figure 4-1, Major Elements of the Dual-Channel Cassette, Figure 4-2, Fluid Path in the Cassette).

(see Figure 4-1, Figure 4-2)

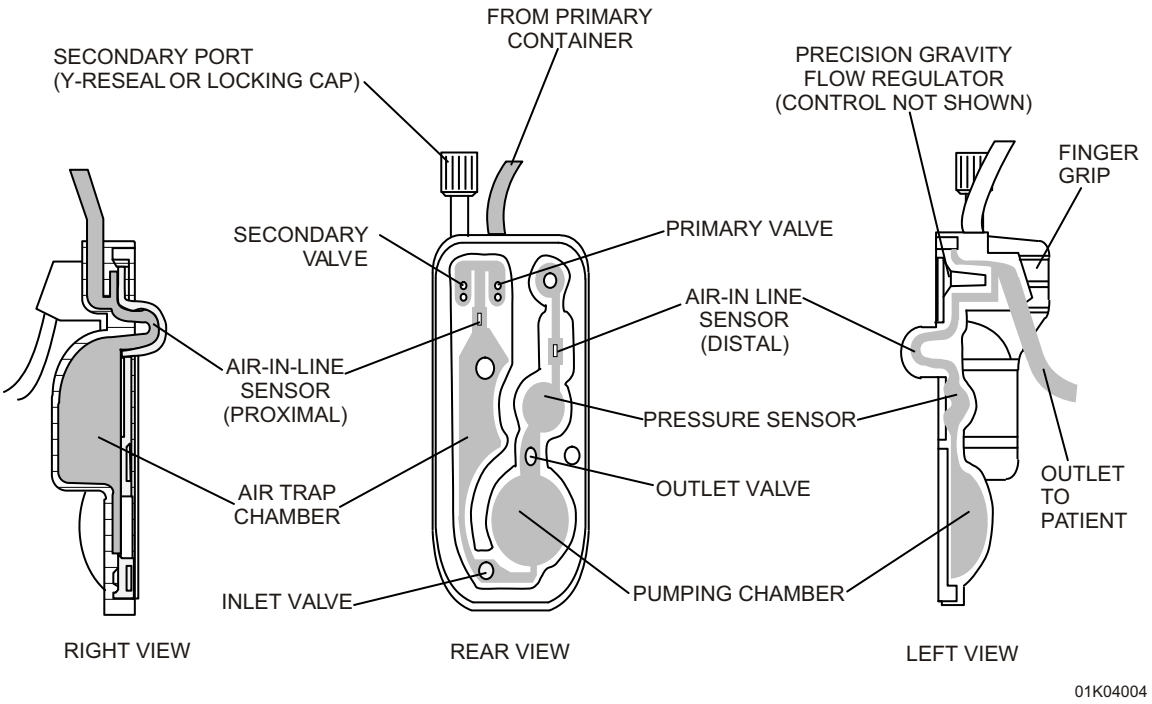

Figure 4-1. Major Elements of the Dual-Channel Cassette

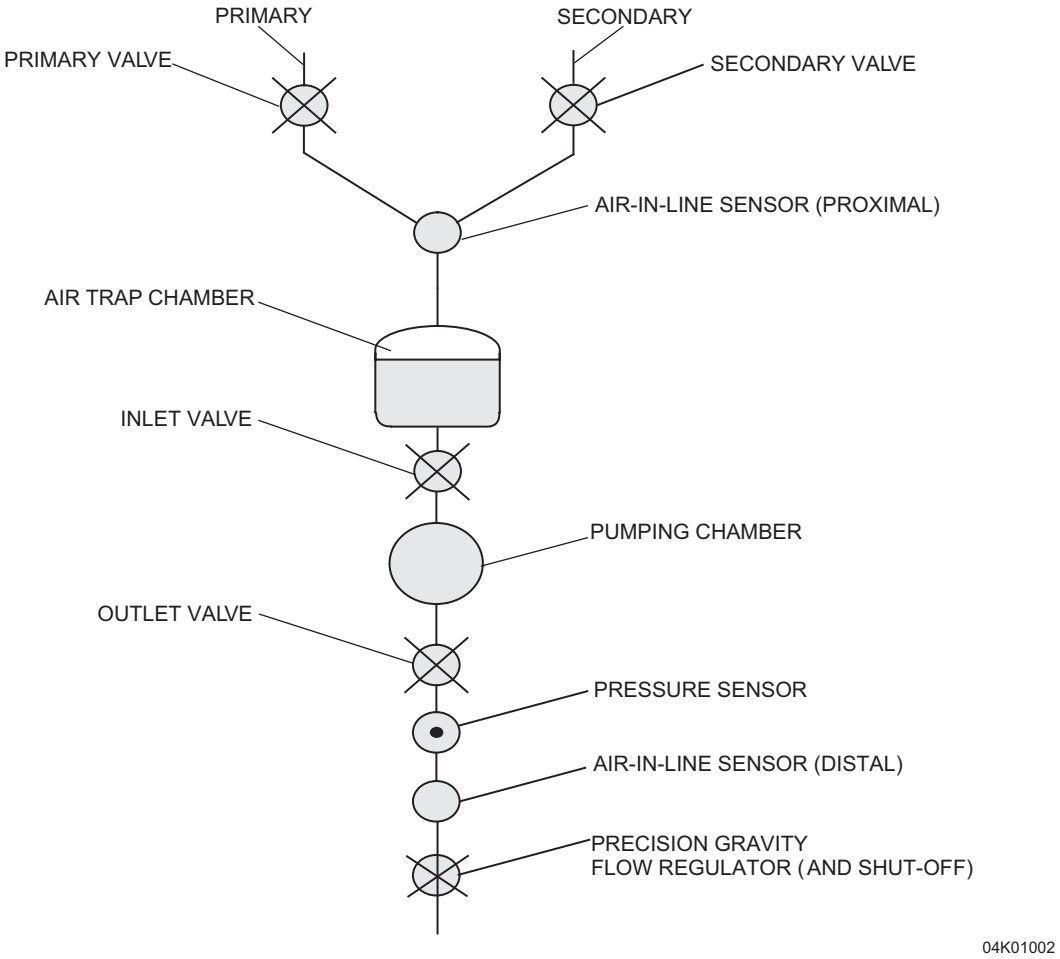

Figure 4-2. Fluid Path in the Cassette

4.3.2
MECHANISM ASSEMBLY

D 0.33 L

4.3.2.1
MOTOR AND VALVE ASSEMBLIES

4.3.2.2
PRIMARY/SECONDARY VALVE SUBSYSTEM

(see Figure 4-3, Mechanism Valve Pins and Sensor Locations).

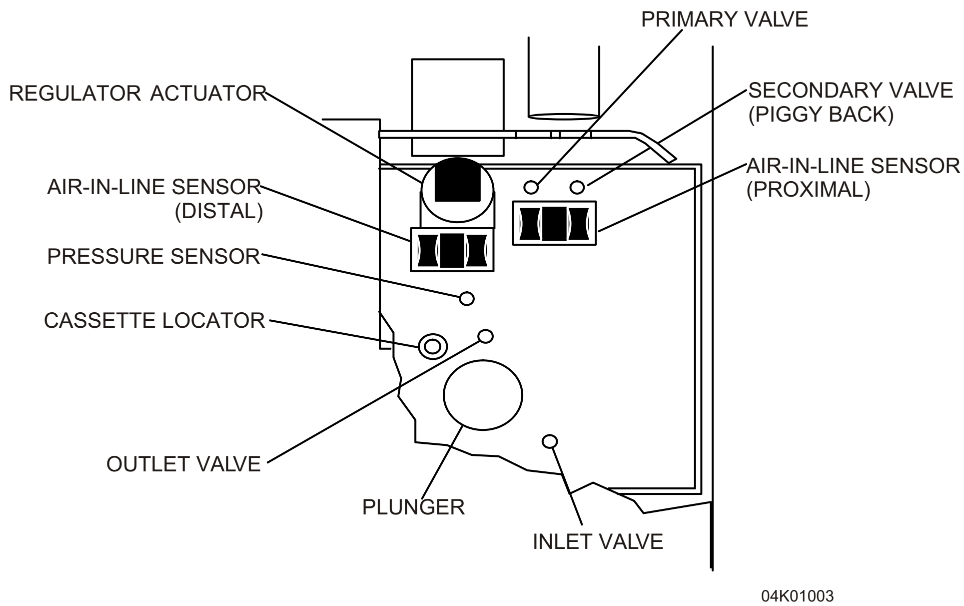

Figure 4-3. Mechanism Valve Pins and Sensor Locations

4.3.2.3 INLET/OUTLET VALVE SUBSYSTEM

[illegible] *Section 4.3.2.2, Primary/Secondary Valve Subsystem,* [illegible]

4.3.2.4 PLUNGER DRIVE SUBSYSTEM

[illegible] 1-2/3 [illegible] 0.33 [illegible]

[illegible]

[illegible]

[illegible]

Section 5

MAINTENANCE AND SERVICE TESTS

A

5.1 ROUTINE MAINTENANCE

.A

.I

5.1.1 INSPECTING THE INFUSION SYSTEM

I . I

Section 5.2.3, Inspection.

5.1.2 CLEANING THE INFUSION SYSTEM

F

WARNING: DISCONNECT THE INFUSION SYSTEM FROM AC (MAINS) POWER PRIOR TO CLEANING THE INSTRUMENT. FAILURE TO COMPLY WITH THIS WARNING COULD RESULT IN ELECTRICAL SHOCK.

CAUTION: Do not immerse the infusion system in liquids. Immersion could damage the instrument. Do not allow liquids to enter the infusion system electronics compartment. Do not spray cleaning solutions toward any openings in the infusion system.

CAUTION: Certain cleaning and sanitizing compounds may slowly degrade components made from some plastic materials. Using abrasive cleaners or cleaning solutions not recommended by Hospira may result in product damage and potentially void the product warranty. Do not use compounds containing combinations of isopropyl alcohol and dimethyl benzyl ammonium chloride.

CAUTION: Do not use solvents that are harmful to plastic, such as isopropyl alcohol or acetone, on external surfaces or plastic components. Do not use abrasive cleaners.

CAUTION: To avoid infuser damage, cleaning solutions should be used only as directed in *Table 5-1, Cleaning Solutions*. The disinfecting properties of cleaning solutions vary; consult the manufacturer for specific information

1. C [illegible] *Table 5-1*, [illegible].
2. [illegible]. Do [illegible]. Do [illegible].

Table 5-1. Cleaning Solutions		
Cleaning Solution	**Manufacturer**	**Preparation**
Coverage™ HB	Steris Corporation	Per manufacturer's recommendation
Dispatch®	Caltech Industries	Per manufacturer's recommendation
Formula C™	JohnsonDiversey	Per manufacturer's recommendation
Manu-Klenz®	Steris Corporation	Per manufacturer's recommendation
Precise®	Caltech Industries	Per manufacturer's recommendation
Sporicidin®	Sporicidin International	Per manufacturer's recommendation
Household bleach	Various	Per hospital procedures; do not exceed one part bleach in ten parts water

5.1.3 SANITIZING THE INFUSION SYSTEM

[illegible] *Table 5-1*.

Note: N[illegible]. C[illegible].

CAUTION: Do not sterilize the infusion system using heat, steam, ethylene oxide (ETO), or radiation. These methods may cause the instrument to malfunction.

5.1.4
CLEANING THE BUZZER

MC

Figure 5-1, Cleaning the Buzzer,

1. *Section 7.2.5*,
2. H
3. M
4. P *Section 5.2*.

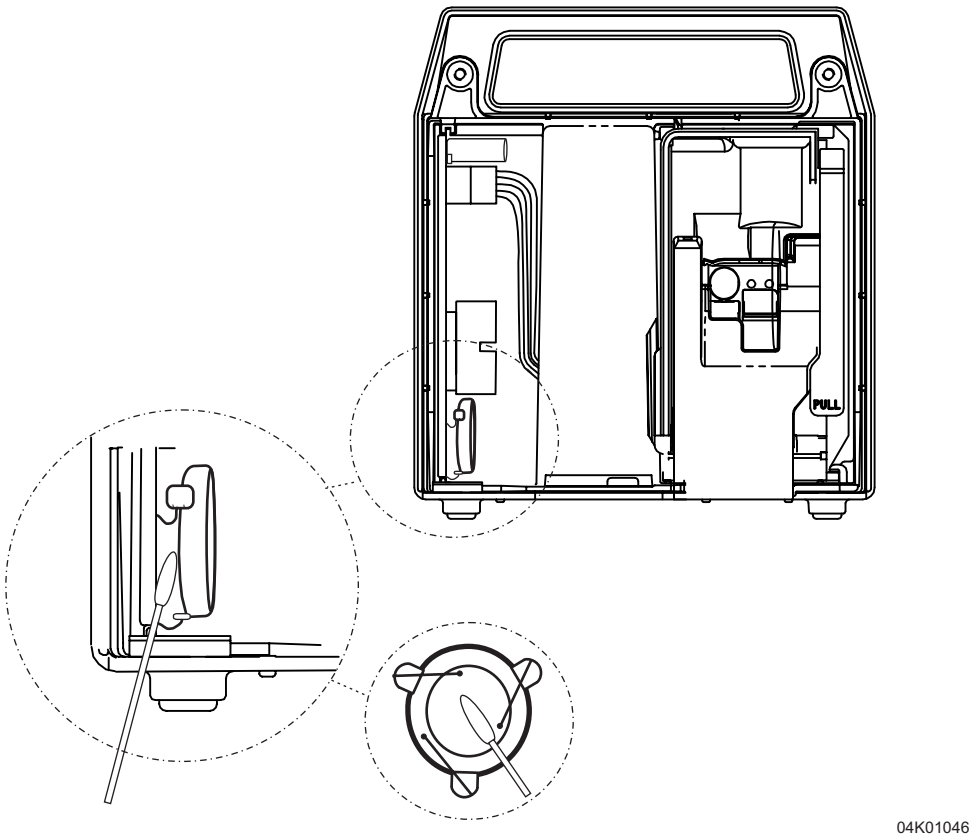

Figure 5-1. Cleaning the Buzzer

5.2
PERFORMANCE VERIFICATION TEST

P (P) . P P . P . I *Table 6-6, PVT Troubleshooting*.

Note: P

5.2.1
EQUIPMENT REQUIRED

P ():

- ❑ G , 25 L, 0.2 L (A)
- ❑ I /
- ❑ D , F B DPM3
- ❑ , F B 232D
- ❑ - , L No. 03233-01 03232-01
- ❑ ( )
- ❑ , L No. 42362-01 ( )
- ❑
- ❑
- ❑ L P , L No. 1642
- ❑ L , L No. 11397
- ❑ D , (DMM), F 187
- ❑ 21- , , , L No. 04492, 18- , , , ,
- ❑ B ( )
- ❑ C , ( )
- ❑ -232 ( )

5.2.2
ICONS AND ENGLISH LANGUAGE EQUIVALENTS

I ... *Figure 5-2, Icons and English Language Equivalents*.

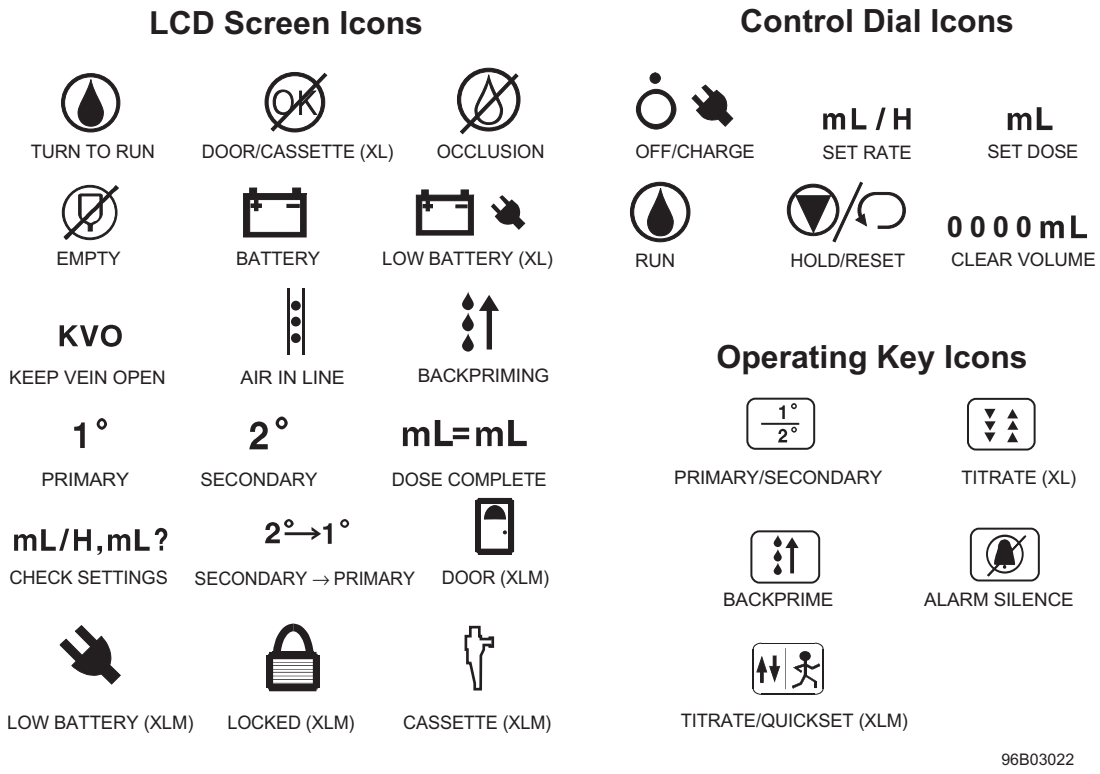

Figure 5-2. Icons and English Language Equivalents

5.2.3
INSPECTION

I

I :

- L
- AC
-
-
- D
- C
-
- F
- C
- P
- F
- B
- LCD
- D _ P (LM D _ P)

Note: D D _ P .

5.2.4
TEST SETUP

WARNING: A PATIENT SHOULD NEVER BE CONNECTED TO THE INFUSION SYSTEM DURING SYSTEM TESTING.

P :

1. C .
2. H 18 24 (46 60).
3. C AC ( ) . C AC ( ) .
4. NLOCKED ( ) (LM).

5.2.5
SELF TEST

CAUTION: Do not place the infusion system in service if the self test fails.

Figure 5-3, Plum XL LCD Test Screens *Figure 5-4, Plum XLM LCD Test Screens*,

1. C AC ( ) AC ( ) AC ( ) AC ( ) OFF/CHA GE
2. O ( )
3. H . D
4. C
5. E A E
6. LCD ; C ( );

Note: I LCD *Figure 5-3* *Figure 5-4* H

Note: I OFF/CHA GE 5 6. I *(see Section 6, Troubleshooting)*. I H

7. D AC ( ) BA E LCD
8. OFF/CHA GE
9. AC ( ) OFF/CHA GE . C AC (M)

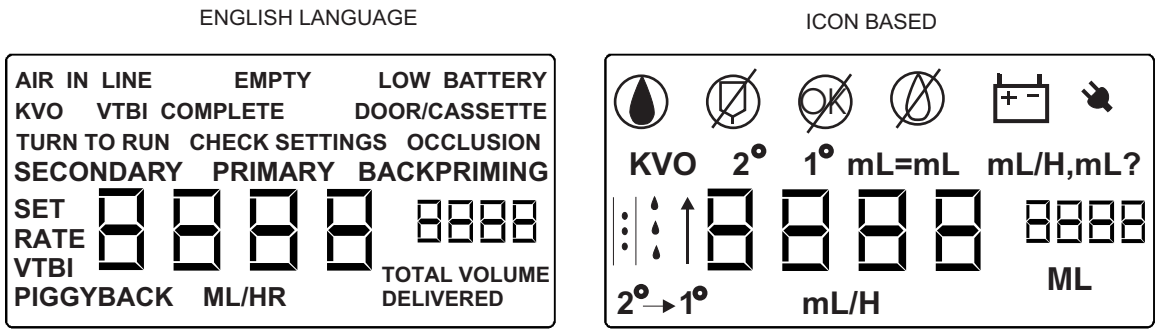

04K01024

Figure 5-3. Plum XL LCD Test Screens

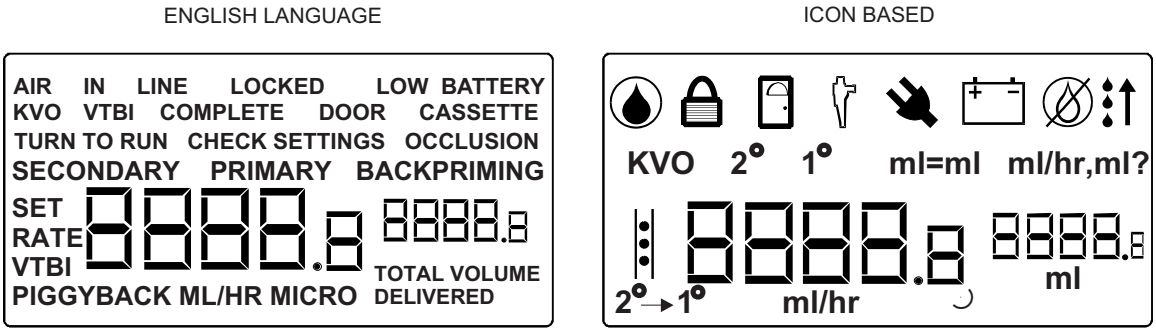

Figure 5-4. Plum XLM LCD Test Screens

Note: A LCD _ _ _ 27_ 54.

5.2.6
KEYPAD AND CONTROL KNOB TEST

1. E A E. P :
   - P I/ EC P IMA _ ECONDA
   - ▲ _ _
   - ▼ _ _
   - MIC O _ _ _ 100 L/ _ _ _ 99.9 L/ (LM)
2. E BI. P :
   - ▲ _ _
   - ▼ _ _
3. N. P _ :
   - I A E/ ICK E _ ▲ _ _
   - I A E/ ICK E _ ▼ _ _
4. E A E. P I A E/ ICK E _ .
5. HOLD/ E E . P _ BACK P IME .

5.2.7
OPEN DOOR ALARM TEST

1. C
2. O DOO /CA E E (L) DOO (LM)
3. P ILENCE .
4. C

5.2.8
ALARM LOUDNESS TEST (XL)

1. DOO / CA E E
2. ( )
3. P ILENCE .
4. C

5.2.9
ALARM LOUDNESS AND LOCK FUNCTION TESTS (XLM)

1. DOO
2. ( )
3. P ILENCE .
4. C
5. HOLD/ E E , N.
6. P LOCK ( ). LOCKED
7. LOCKED
8. N.
9. P ILENCE .
10. P LOCK

5.2.10
BATTERY LEGEND TEST

1. D
2. E A E.
   BA E
3. AC (_)
4. OFF/CHA GE.

5.2.11
FREE FLOW TEST

1. I
2. E A E.
3.
4. O

> **Note:** A

5. C
6. OFF/CHA GE.

5.2.12
PROXIMAL OCCLUSION TEST

1. E A E. 40 L/ .
2. N
3. A .A
4. P ILENCE
5. OFF/CHA GE.

5.2.13
DISTAL OCCLUSION TEST

Figure 5-5, Distal Occlusion Test Setup

1. C DPM *Figure 5-5*.

   Note: A DPM DPM.

   Note: DPM 0 6 (0 15) .

2. E A E.
3. 40 L/ .
4. E BI.
5. 100 L.
6. O .
7. N .
8. .
9. DPM 10.0 2 (69.0 13.8 P).
10. HOLD/ E E . O .

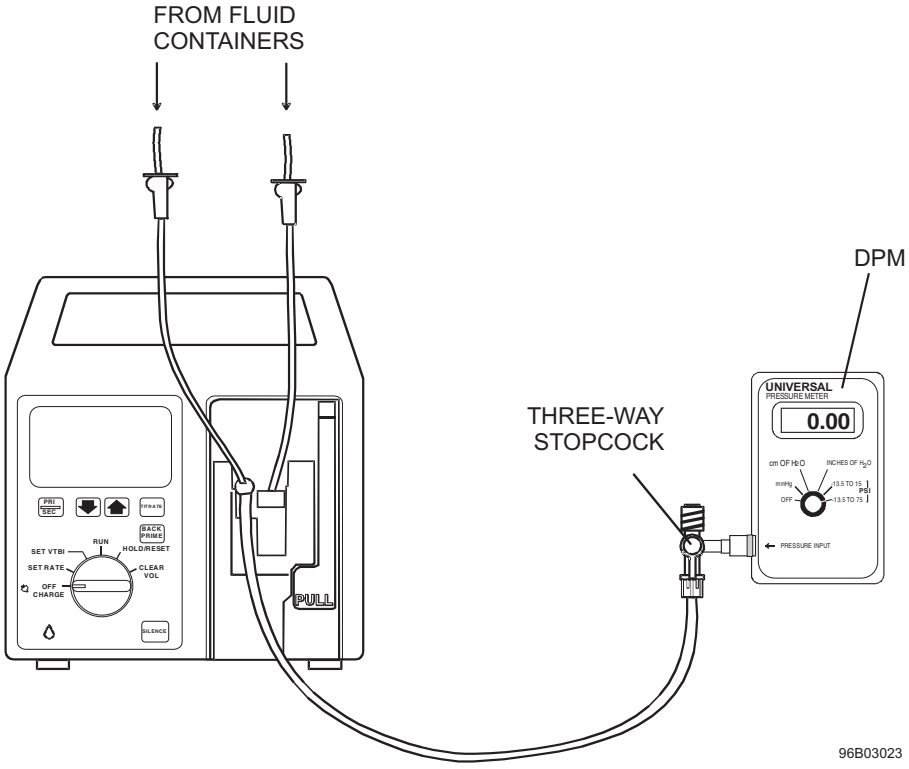

Figure 5-5. Distal Occlusion Test Setup

5.2.14
DELIVERY ACCURACY TEST

Note: A

CAUTION: Do not remove the protective cover from the butterfly needle.

1. A 18-
2. P P 25 L
3. E A E 400 L/ .
4. P P I/ EC ECONDA 400 L/ .
5. E BL P I/ EC P IMA .
6. 10 L.
7. P P I/ EC ECONDA 10 L.
8. CLEA OL
9. A
10. N 20 1 L. BI K O 1 L/ .
11. OFF/CHA GE.
12. C

5.2.15
EMPTY CONTAINER/AIR-IN-LINE ALARM TEST

1. EMP . *(see Figure 5-6, Special Cassettes with Bubble Sensor Tips Removed)*.
2. E BI.
3. 100 L.
4. N AI -IN-LINE BACKP IMING
5. HOLD/ E E .
6. O
7. AI . *(see Figure 5-6)*.
8. N AI -IN-LINE

9. [illegible] HOLD/ E E .
10. O [illegible] .

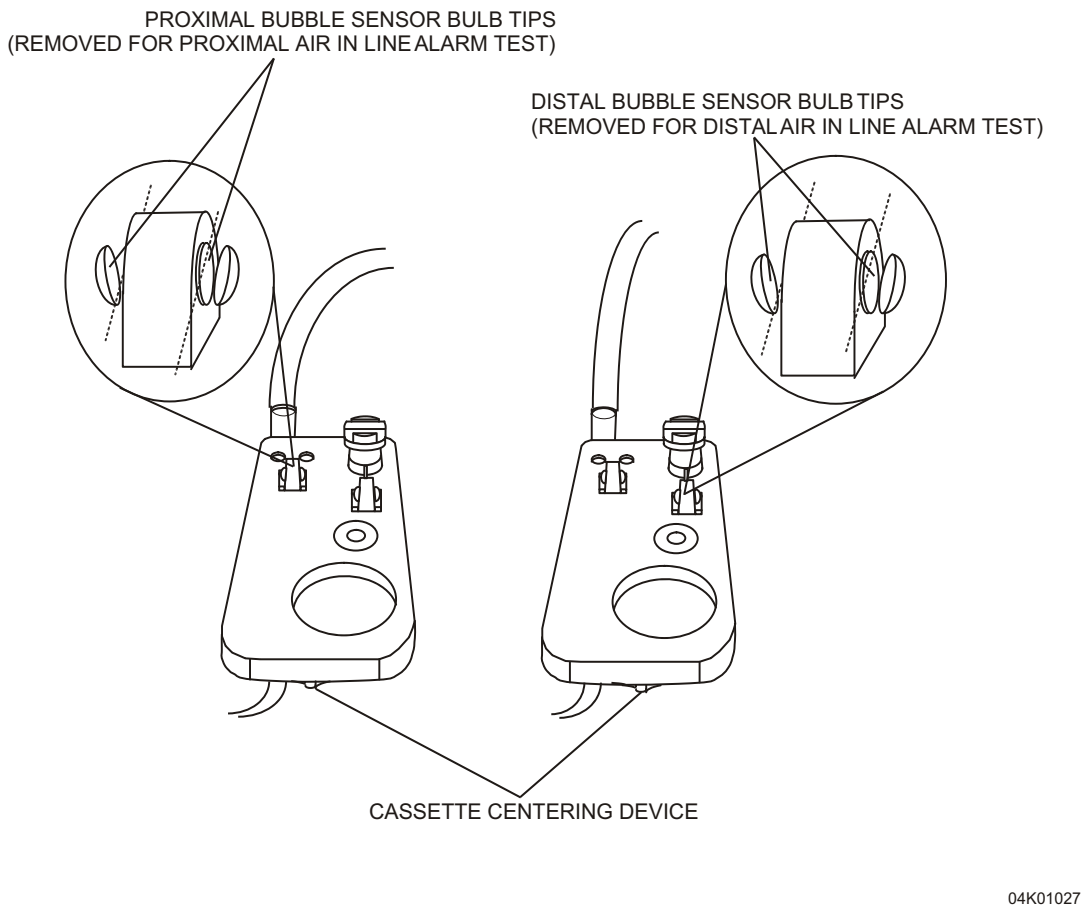

Figure 5-6. Special Cassettes with Bubble Sensor Tips Removed

5.2.16
ELECTRICAL SAFETY TEST

[illegible] :

1. C[illegible] AC ([illegible]) [illegible] .
2. C[illegible] .
3. C[illegible] . L[illegible] 100 [illegible] (A) (AC M).
4. M[illegible] AC ([illegible]) [illegible] 0.1 Ω.

5.2.17
END OF PERFORMANCE VERIFICATION TEST

I[illegible]:

1. C[illegible].
2. [illegible].
3. [illegible].

Note: I[illegible] *Section 6, Troubleshooting*, [illegible] H[illegible] O[illegible].

5.3
PERIODIC MAINTENANCE INSPECTION

P[illegible]. I[illegible] JCAHO[illegible]/[illegible]. P[illegible] *Section 8, Specifications*. [illegible] *Section 5.2*.

5.4
BATTERY OPERATION OVERVIEW

[illegible]. E[illegible] AC ([illegible]) [illegible] AC ([illegible]) [illegible]. A[illegible].

[illegible] AC ([illegible]) [illegible] BA[illegible] E[illegible].

E[illegible]. A[illegible]. B[illegible].

Note: A[illegible].

[illegible] LO[illegible] BA[illegible] E[illegible]. A[illegible]. A[illegible].

CAUTION: As soon as the LOW BATTERY alarm occurs, connect the infusion system to AC (mains) power.

AC ( ) . I
AC ( )

Note:

5.4.1
BATTERY CHARGER CURRENT TEST (OPTIONAL)

Figure 5-7, Battery Charger Current Test Configuration, :

Note: M I , .

1. D AC ( ) .
2. C *Figure 5-7*. M 1 .
3. C AC ( ) 20 .
4. C *Table 5-2, Battery Charger Current Test Parameters*.

   Note: I , . C 1; 3 *Table 5-2*.

5. D AC ( ) .

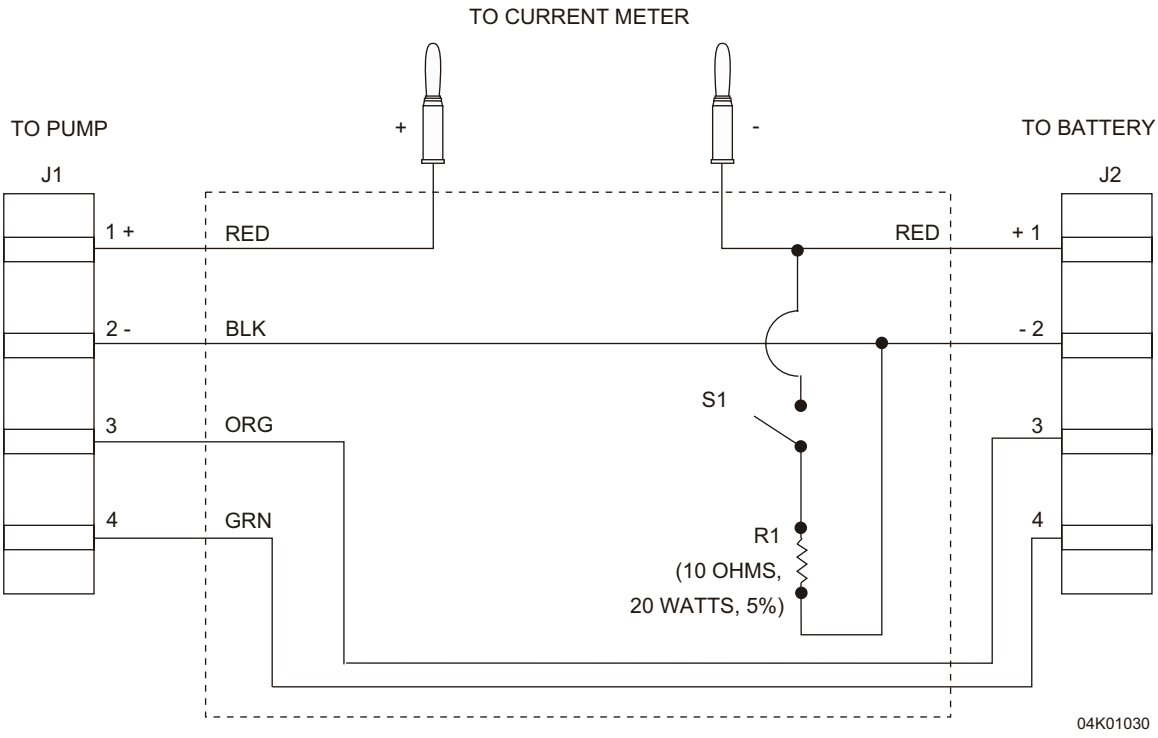

Figure 5-7. Battery Charger Current Test Configuration

Table 5-2. Battery Charger Current Test Parameters			
Battery Type	**Jumper between Pins 3 and 4**	**Minimum Value**	**Maximum Value**
1	No	1.0 Amps	1.4 Amps
2	Yes	0.64 Amps	0.92 Amps

5.5
DATAPORT CONNECTION AND GROUND CONTINUITY TEST (OPTIONAL)

D _ P *Figure 5-8, DataPort Connector*, :

1. C .
2. M DMM D _ P _ .
3. C AC ( ) .
4. E A E .
5. M D _ P 10 (C) 9 (COMGND). 12.25 0.25 DC.
6. OFF .
7. C -232 .

8. [illegible]:
   - 1200 [illegible], 8 [illegible], [illegible] 1
   E [illegible]
9. [illegible] E A E [illegible].
10. [illegible]:
    @0;I45A4<C > (<C > = C [illegible])

    Note: C[illegible] [illegible].

11. [illegible]:
    F ; ; (= H ID , = ID , = C C)
12. [illegible] OFF [illegible].
13. D [illegible] -232 [illegible] D P[illegible] C[illegible] [illegible].

Note: D[illegible] D P[illegible].

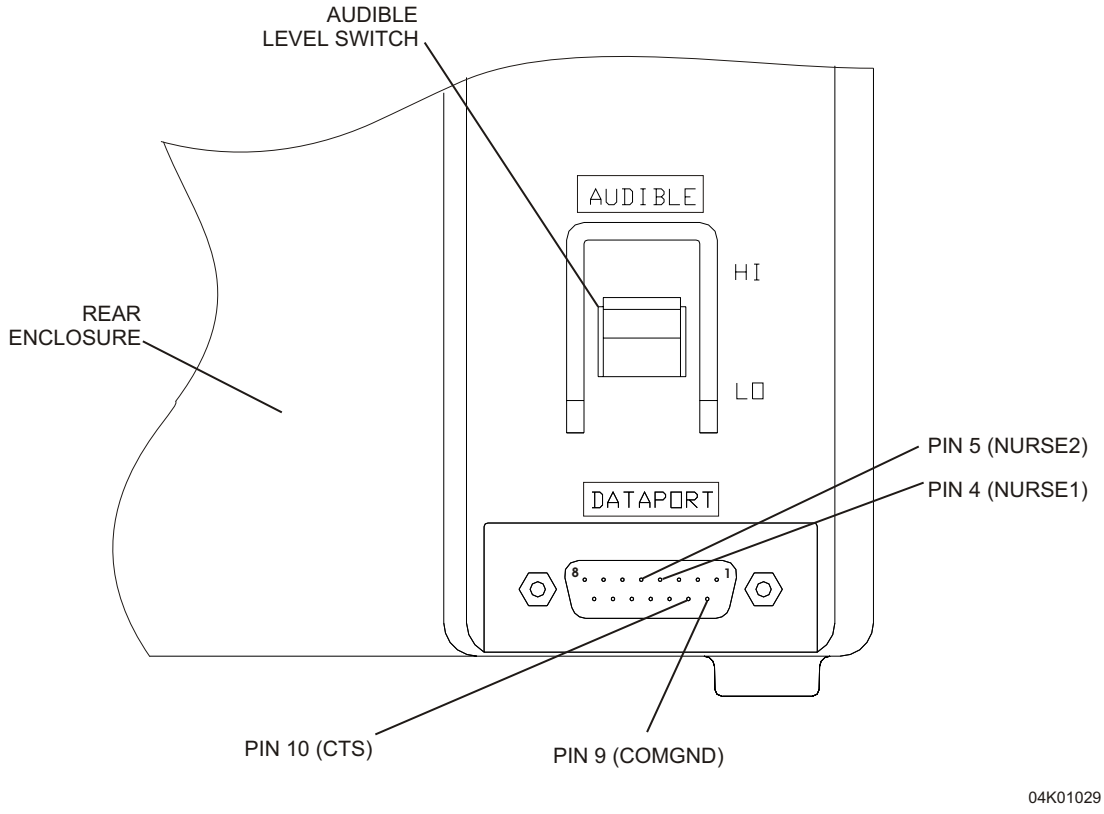

Figure 5-8. DataPort Connector

5.6
NURSE CALL FUNCTION TEST (OPTIONAL)

Figure 5-8,

1. C
2. E A E . 40 L/ .
3. E BI . 100 L.
4. N
5. M 4 5 DMM.
6. A .A
7. M 4 5 DMM.
8. P ILENCE
9. 4 5 ILENCE .
10. OFF/CHA GE.

Note: IEC EN-2

Section 6

TROUBLESHOOTING

6.1 TECHNICAL ASSISTANCE

6.2 ALARM MESSAGES AND ERROR CODES

Table 6-1, Operational Alarm Messages and Corrective Actions, *Table 6-2, Error Codes Requiring Technical Service*.

6.2.1
OPERATIONAL ALARM MESSAGES

Table 6-1 . A
Table 6-1

Note: O LCD . A *(see Section 6.2.3.1, Alarm History)*.

Table 6-1. Operational Alarm Messages and Corrective Actions

Error Code	Alarm Message	Description	Possible Cause	Corrective Action
01-1	**OCCLUSION**	Distal occlusion alarm	Distal pressure above 10 psi for five seconds	Unkink tubing, check IV site, or replace administration set If condition recurs, contact Hospira
01-2		Distal occlusion alarm	Distal pressure above 10 psi for two plunger strokes	
01-3		Distal occlusion alarm	Distal pressure above 13 psi	
01-4		Distal occlusion alarm	Excessive distal pressure during the valve leak test	
03-1		Proximal occlusion alarm	Clamp closed; tubing kinked; possible occluded tubing; defective administration set; or defective pressure circuit	
03-2		Proximal occlusion on secondary during backpriming		
06-1	**AIR IN LINE BACKPRIMING**	Air detected in cassette Proximal air-in-line	1000 µL of air has entered the cassette since last initialization	Backprime to expel air
07-1	**AIR IN LINE**	Distal air-in-line	100 µL bolus of air detected at distal sensor	Remove and reprime cassette
07-2		Distal air-in-line	260 µL of air detected in the last 2.6 mL of fluid delivered	Remove and reprime cassette

Table 6-1. Operational Alarm Messages and Corrective Actions

Error Code	Alarm Message	Description	Possible Cause	Corrective Action
08-1	**AIR IN LINE BACKPRIMING**	Empty container alarm	500 µL of air detected entering the cassette in the last two intake strokes	Change container and backprime to expel air
10-1	**CHECK SETTINGS** mL/H=mL?	Check settings alarm	Rate and VTBI settings not correct	Turn control knob to SET RATE or SET VTBI to check settings or enter values
11-1	**TURN TO RUN**	Turn to run alarm	Rotary control knob not in OFF/CHARGE or RUN position, or no key is pressed for five minutes	Turn control knob to RUN, OFF/CHARGE, or HOLD/RESET
12-1	**VTBI COMPLETE** mL=mL	Primary VTBI complete alarm	The VTBI for the primary channel has been delivered	Discontinue infusion, or change container and program new VTBI setting
12-2		Secondary VTBI complete alarm	The VTBI for the secondary channel has been delivered	
13-1	**CASSETTE** **DOOR/CASSETTE (XL only)** or	Input/output valve leak test failure	Defective administration set	Turn control knob to OFF/CHARGE, open and close cassette door, then restart If condition recurs, replace administration set Turn control knob to OFF/CHARGE or HOLD/RESET, reprime cassette and restart
13-2		Primary/ secondary valve leak test failure	Cassette improperly loaded or improperly primed	
13-3		Valve leak test failure due to excessive signal noise	Fluid spillage around valve pins	Clean valve pins

Table 6-1. Operational Alarm Messages and Corrective Actions

Error Code	Alarm Message	Description	Possible Cause	Corrective Action
14-1	**LOCKED**	Lock violation alarm	Control knob position changed while in LOCKED mode	Press LOCK button and reset settings
15-1	**None** The device does not communicate to the host computer	UART test failure	The UART loop-back test during power-up failed	Replace MCU PWA *(Section 7.2.9.1)*
15-2	**None** The device does not communicate to the host computer	Excessively frequent UART interrupts	The MCU does not have enough time to process UART hardware due to UART hardware failure	Replace MCU PWA *(Section 7.2.9.1)*
15-3	**None** The device does not communicate to the host computer	The UART receiver buffer has overflowed	The MCU does not have enough time to process the received data due to UART hardware failure	Replace MCU PWA *(Section 7.2.9.1)*
16-1	**TURN TO RUN**	Control knob in between valid states for five minutes	Control knob not in OFF/CHARGE or RUN position	Turn control knob to RUN, OFF/CHARGE, or HOLD/RESET position
			Defective control knob assembly	Replace control knob assembly *(Section 7.2.7.3)*
17-1	**LOW BATTERY**	Low battery alarm	Low battery	Connect to AC power or turn control knob to HOLD/RESET, then to RUN
17-2		Low battery re-alarms after 15 minutes	Low battery	Connect to AC power or turn control knob to HOLD/RESET, then to RUN
18-1	**LOW BATTERY**	Discharged battery alarm	Fully discharged battery	Connect to AC power, turn control knob to OFF/CHARGE, or replace the battery

Table 6-1. Operational Alarm Messages and Corrective Actions

Error Code	Alarm Message	Description	Possible Cause	Corrective Action
18-2	Display blank	Infusion system shutdown one minute after discharged battery alarm	Fully discharged battery	Connect to AC power, turn control knob to OFF/CHARGE, or replace the battery
19-1	**DOOR** **DOOR/CASSETTE (XL only** or 	Door open	Cassette door open	Turn control knob to OFF/CHARGE, or close cassette door
			Cassette not seated properly	Reseat cassette

6.2.2
ERROR CODES REQUIRING TECHNICAL SERVICE

Table 6-2 [illegible] *Table 6-2* [illegible]

Note: [illegible] LCD [illegible] *Section 6.2.3.1*.

Table 6-2. Error Codes Requiring Technical Service

Error Code	Malfunction Description	Possible Cause	Corrective Action
20-1	Stack overflow	MCU RAM error	Replace MCU PWA *(Section 7.2.9.1)*
21-1	Critical data checksum failure at start up	MCU RAM error	Replace MCU PWA *(Section 7.2.9.1)*
		Nonvolatile memory error	If condition recurs, contact Hospira
21-2	Critical data checksum failure during operation	MCU RAM error	Replace MCU PWA *(Section 7.2.9.1)*
21-3	Checksum of operational parameters failure at startup	MCU RAM error	
21-4	Checksum of operational parameters failure during operation	MCU RAM error	
29-1	ROM checksum failure at startup	MCU ROM error	
29-2	ROM checksum failure during operation	MCU ROM error	
29-3	ROM checksum test not being performed	MCU execution error	
34-1	EEPROM read/write test failure	Decode circuit failure	Replace MCU PWA *(Section 7.2.9.1)*
		EEPROM chip failure	
35-1	Critical RAM values found incorrect	MCU RAM error	
41-1	LCD driver chip test failure	Decode circuit failure	Replace MCU PWA *(Section 7.2.9.1)*
		Driver chip failure	Replace display PWA *(Section 7.2.7.1)*
44-1 **44-2**	Audio BUZZER signal out of range	Audio buzzer or circuit failure	Replace MCU PWA *(Section 7.2.9.1)*
		ADC on MCU chip not functioning properly or ADC reference voltage not correct	Check fuse F3 on power supply PWA; replace fuse, if defective *(Section 7.2.8.1)*
			If condition recurs, contact Hospira

Table 6-2. Error Codes Requiring Technical Service

Error Code	Malfunction Description	Possible Cause	Corrective Action
45-1	[PRI/SEC] key stuck in ON position	Switch S1 on display PWA shorted or stuck	Replace display PWA *(Section 7.2.7.1)*
		Front panel key stuck	Replace key *(Section 7.2.7.2)* Replace front enclosure assembly *(Section 7.2.6)*
45-2	[UP ARROW] key stuck in ON position	Switch S3 on display PWA shorted or stuck	Replace display PWA *(Section 7.2.7.1)*
		Front panel key stuck	Replace key *(Section 7.2.7.2)* Replace front enclosure assembly *(Section 7.2.6)*
45-3	[DOWN ARROW] key stuck in ON position	Switch S2 on display PWA shorted or stuck	Replace display PWA *(Section 7.2.7.1)*
		Front panel key stuck	Replace key *(Section 7.2.7.2)* Replace front enclosure assembly *(Section 7.2.6)*
45-4	[TITRATE] key stuck in ON position	Switch S4 on display PWA shorted or stuck	Replace display PWA *(Section 7.2.7.1)*
		Front panel key stuck	Replace key *(Section 7.2.7.2)* Replace front enclosure assembly *(Section 7.2.6)*
45-5	[BACKPRIME] key stuck in ON position	Switch S5 on display PWA shorted or stuck	Replace display PWA *(Section 7.2.7.1)*
		Front panel key stuck	Replace key *(Section 7.2.7.2)* Replace front enclosure assembly *(Section 7.2.6)*
45-6	[SILENCE] key stuck in ON position	Switch S6 on display PWA shorted or stuck	Replace display PWA *(Section 7.2.7.1)*
		Front panel key stuck	Replace key *(Section 7.2.7.2)* Replace front enclosure assembly *(Section 7.2.6)*
59-1	Valve motor moving at the wrong time	Position sensor failure	Replace mechanism assembly *(Section 7.2.9.2)*
		Motor drive circuit failure	Replace MCU PWA *(Section 7.2.9.1)*

Table 6-2. Error Codes Requiring Technical Service

Error Code	Malfunction Description	Possible Cause	Corrective Action
60-1	Plunger motor position flag stuck high during re-synchronization	Position sensor failure	Replace mechanism assembly *(Section 7.2.9.2)*
		Plunger motor not moving	Check connection at J7 on MCU PWA If condition recurs, contact Hospira
60-2	Plunger motor position signal is continuous low during re-synchronization	Position sensor failure	Replace mechanism assembly *(Section 7.2.9.2)*
		Enable circuit failed	Check connection at J7 on MCU PWA If condition recurs, contact Hospira
		Plunger motor not moving	
61-1	Input/output motor position flag is continuous high during re-synchronization	Position sensor failure	Replace mechanism assembly *(Section 7.2.9.2)*
		Input/output motor not moving	Check connection at J8 on MCU PWA If condition recurs, contact Hospira
61-2	Input/output motor position signal is continuous low during re-synchronization	Position sensor failure	Replace mechanism assembly *(Section 7.2.9.2)*
		Enable circuit failure	Check connection at J8 on MCU PWA If condition recurs, contact Hospira
		Input/output motor not moving	
62-1	Primary/secondary motor position flag is continuous high during re-synchronization	Position sensor failure	Replace mechanism assembly *(Section 7.2.9.2)*
		Primary/secondary motor not moving	Check connection at J9 on MCU PWA If condition recurs, contact Hospira
62-2	Primary/secondary motor position signal is continuous low during re-synchronization	Position sensor failure	Replace mechanism assembly *(Section 7.2.9.2)*
		Enable circuit failure	Check connection at J9 on MCU PWA If condition recurs, contact Hospira
		Primary/secondary motor not moving	
63-1	Plunger motor phase loss	Plunger motor does not have enough torque	Replace mechanism assembly *(Section 7.2.9.2)*
		Mechanical assembly failure	

Table 6-2. Error Codes Requiring Technical Service

Error Code	Malfunction Description	Possible Cause	Corrective Action
64-1	Input/output motor phase loss	Input/output motor does not have enough torque	Replace mechanism assembly *(Section 7.2.9.2)*
		Mechanical breakage in mechanism	
65-1	Primary/secondary motor phase loss	Primary/secondary motor does not have enough torque	Replace mechanism assembly *(Section 7.2.9.2)*
		Mechanical breakage in mechanism	
71-1	Internal timers out of tolerance	Internal MCU PWA malfunction	Replace MCU PWA *(Section 7.2.9.1)*
73-1	+2.5-VDC ADC reference voltage out of tolerance	+2.5-VDC reference to ADC missing or bad	Check fuse F3 on power supply PWA; replace fuse, if defective *(Section 7.2.8.1)* If condition recurs, contact Hospira
		+3.75-VDC reference to ADC missing or bad	Check fuse F3 on power supply PWA; replace fuse, if defective *(Section 7.2.8.1)* If condition recurs, contact Hospira
		ADC failure	Replace MCU PWA *(Section 7.2.9.1)*
73-2	+5-VDC ADC reference voltage out of tolerance	+2.5-VDC reference to ADC missing or bad	Check fuse F3 on power supply PWA; replace fuse, if defective *(Section 7.2.8.1)* If condition recurs, contact Hospira
		+3.75-VDC reference to ADC missing or bad	Check fuse F3 on power supply PWA; replace fuse, if defective *(Section 7.2.8.1)* If condition recurs, contact Hospira
		ADC converter failure	Replace MCU PWA *(Section 7.2.9.1)*
74-1	Air sensor self test failure; signal seen when sensors disabled	Air sensor or circuitry failure	Replace mechanism assembly *(Section 7.2.9.2)*
74-4	Proximal air sensor signal too high	Air sensor or circuitry failure	Replace mechanism assembly *(Section 7.2.9.2)*
74-5	Distal air sensor signal too high	Air sensor or circuitry failure	Replace mechanism assembly *(Section 7.2.9.2)*

Table 6-2. Error Codes Requiring Technical Service

Error Code	Malfunction Description	Possible Cause	Corrective Action
81-1	Power supply PWA signals HKDC and DHKDC do not match	Power supply PWA failure	Replace power supply PWA *(Section 7.2.8.2)*
		Failure in conditioning circuit on MCU PWA	Replace MCU PWA *(Section 7.2.9.1)*
81-2	Power supply PWA signal HKDC out of tolerance	Power supply PWA failure	Replace power supply PWA *(Section 7.2.8.2)*
		Failure of conditioning circuit on MCU PWA	Replace MCU PWA *(Section 7.2.9.1)*
81-3	Power supply PWA signal VMOT out of tolerance when AC power is applied	Power supply PWA failure	Replace power supply PWA *(Section 7.2.8.2)*
81-4	Motor voltage drops too much when motor is energized	Power supply PWA failure Motor drawing excessive current	Replace power supply PWA *(Section 7.2.8.2)* If condition recurs, contact Hospira
90-1	Calibration data in EEPROM checksum failure	EEPROM internal failure EEPROM decode circuitry failure	Contact Hospira
94-1	Control knob signal seen when disabled	Control knob circuitry failure	Replace display PWA *(Section 7.2.7.1)*
94-2	Illegal control knob signal seen	Control knob circuitry failure	Replace display PWA *(Section 7.2.7.1)*
94-4	Reed switch does not match control knob signal	Control knob circuitry failure Reed switch failure	Replace display PWA *(Section 7.2.7.1)*
95-1	Primary valve pin not moving	Pin detect circuitry failure Valve pin not present Valve pin not moving	Replace mechanism assembly *(Section 7.2.9.2)*
95-2	Secondary valve pin not moving	Pin detect circuitry failure Valve pin not present Valve pin not moving	Replace mechanism assembly *(Section 7.2.9.2)*
96-1	UART test failure during operation	UART failure	Replace MCU PWA *(Section 7.2.9.1)*
99-1 through 99-6	Failure of one of the internal software self-tests	MCU internal failure	Replace MCU PWA *(Section 7.2.9.1)*

6.2.3 SERVICE MODE

. O P, L, I A E ILENCE OFF/CHA GE .

O P, LM, I A E/ ICK E ILENCE OFF/CHA GE .

Table 6-3, Service Mode Control Knob Settings,

Table 6-3. Service Mode Control Knob Settings	
Control Knob Setting	**Service Mode Information**
SET RATE	Alarm history
SET VTBI	Software revision number
RUN	Run time and battery run time
HOLD/RESET (XLM with DataPort)	Parameter programming

6.2.3.1 ALARM HISTORY

E A E . I (E 01, E 02, E 03) . I **Er** ----.

▲ ▼ . ▲ . P ▲ ▼ .

. C P I/ EC BACKP IME . A .

6.2.3.2
SOFTWARE REVISION NUMBER

E BI
. F
105, 1.05.
H .

6.2.3.3
RUN TIME AND BATTERY RUN TIME

N
. I
. F :
245 79,
2,450 790
2,450 .

P I/ EC BACKP IME
. A .

6.2.3.4
PARAMETER PROGRAMMING (XLM WITH DATAPORT)

HOLD/ E E ,
. E
Table 6-4, Sub-Modes of Parameter Programming.

( )
BACKP IME
(ID), ( ), .

Table 6-4. Sub-Modes of Parameter Programming

Sub-Mode Name	Purpose	Sub-Mode Index
Communication Selection	To select the communication with the host computer	1
Soft ID	To enter the soft ID of the infusion system	2
Channel Label	To enter the channel label of the infusion system	3

6.2.3.4.1

Communication Selection

0 1. 0
AC ( ) 1
. *Table 6-5, Communication Circuitry Selections*,
0 1.

Table 6-5. Communication Circuitry Selections

Selection	AC Operation	Battery Operation
0	Power up communication circuitry	Power down communication circuitry
1	Power up communication circuitry	Power up communication circuitry

6.2.3.4.2

Soft ID

ID. 0 9999.

, 9999. , 0.

6.2.3.4.3

Channel Label

ID
. I
0
(. ., LM D P).

I A E/ ICK E ILENCE

6.3
TROUBLESHOOTING PROCEDURES

Table 6-6, PVT Troubleshooting, [illegible] P [illegible] (P [illegible]). I[illegible] [illegible], *Section 6.2*.

Table 6-6. PVT Troubleshooting

Test Failures	Possible Causes	Corrective Actions
Self test *Secti[illegible]5.2.5*	Cassette not properly installed	Reprime and re-insert cassette
	Defective MCU PWA	Replace MCU PWA
Keypad and control knob test *Secti[illegible]5.2.6*	Defective display PWA or ribbon cable	Replace display PWA or ribbon cable
	Defective control knob	Replace control knob
Open door alarm test *Secti[illegible]5.2.7*	Cassette door open	Close cassette door
	Cassette not properly seated	Reseat cassette
	Defective sensor PWA	Replace mechanism assembly
	Defective mechanism assembly	Replace mechanism assembly
	Defective MCU PWA or ribbon cable	Replace MCU PWA or ribbon cable
	Defective display PWA or ribbon cable	Replace display PWA or ribbon cable
Alarm loudness test *Secti[illegible]5.2.8* *Secti[illegible]5.2.9*	Corrosive buildup on bottom surface of the buzzer located on the MCU board	Clean buzzer *(ee Secti[illegible]5.1.4)*
	Defective MCU PWA	Replace MCU PWA
	Defective power supply PWA	Replace power supply PWA
Battery legend test *Secti[illegible]5.2.10*	Defective fuse	Replace fuse
	Defective AC (mains) cordset	Replace AC (mains) cordset
	Defective display PWA or ribbon cable	Replace display PWA or ribbon cable
	Defective power supply PWA	Replace power supply PWA
Free flow test *Secti[illegible]5.2.11*	Cassette not properly seated	Reseat cassette
	Defective cassette	Replace cassette
	Defective or dirty valve pins	Clean valve pins
		Replace mechanism assembly
Proximal occlusion test *Secti[illegible]5.2.12*	Closed proximal clamp	Open clamp
	Cassette not properly primed	Reprime cassette
	Defective cassette	Replace cassette
	Dirty sensor pin	Clean sensor pin
	Defective sensor PWA	Replace mechanism assembly
Distal occlusion test *Secti[illegible]5.2.13*	Cassette not properly primed	Reprime cassette
	Defective cassette	Replace cassette
	Dirty sensor pin	Clean sensor pin
	Defective sensor PWA	Replace mechanism assembly

Table 6-6. PVT Troubleshooting

Test Failures	Possible Causes	Corrective Actions
Delivery accuracy test *Section 5.2.14*	Set not properly primed	Reprime set
	Damaged or faulty set	Prime using new set
	Defective mechanism assembly	Replace mechanism assembly
Empty container/ air-in-line alarm test *Section 5.2.15*	Defective special cassette	Replace special cassette
	Dirty bubble sensors	Clean bubble sensors
	Defective bubble sensor PWA	Replace mechanism assembly
	Defective sensor PWA	Replace mechanism assembly
Electrical safety test *Section 5.2.16*	Insufficient ground connection	Attach lead to T point screw on rear of infusion system
	Defective AC (mains) cordset	Replace AC (mains) cordset
	Defective power supply PWA	Replace power supply PWA
Battery charger current test (optional) *Section 5.4.1*	Blown fuse	Replace fuse
	Defective AC (mains) cordset	Replace AC (mains) cordset
	Defective power supply PWA	Replace power supply PWA
DataPort connection/ ground continuity test (optional) *Section 5.5*	Insufficient ground connection from DataPort connector to ground screw	Attach ground wire from DataPort connector to ground screw
	Defective DataPort/MCU cable assembly	Replace DataPort/MCU cable assembly
	DataPort/MCU cable not properly seated on MCU PWA	Reseat DataPort/MCU cable assembly to MCU PWA

Section 7

REPLACEABLE PARTS AND REPAIRS

7.1 REPLACEABLE PARTS

Figure 9-1, Illustrated Parts Breakdown. *Table 9-2, IPB for the Infusion System*, *Figure 9-1*.

(see Section 6.1, Technical Assistance),

7.2
REPLACEMENT PROCEDURES

7.2.1
SAFETY AND EQUIPMENT PRECAUTIONS

WARNING: POSSIBLE EXPLOSION HAZARD EXISTS IF THE INFUSION SYSTEM IS SERVICED OR REPAIRED IN THE PRESENCE OF FLAMMABLE ANESTHETICS.

WARNING: UNLESS OTHERWISE INDICATED, DISCONNECT THE INFUSION SYSTEM FROM AC POWER BEFORE PERFORMING ANY REPLACEMENT PROCEDURE.

CAUTION: Use proper ESD grounding techniques when handling components. Wear an antistatic wrist strap and use an ESD-protected workstation. Store PWAs in antistatic bags before placing them on any surface.

7.2.2
REQUIRED TOOLS AND MATERIALS

- ❑ (1/4, 3/16, 5/16)
- ❑ M
- ❑ No. 2 P
- ❑ F
- ❑
- ❑ L
- ❑ D
- ❑ (,)
- ❑ , 3/8
- ❑ M ( )

7.2.3
RUBBER FOOT PAD REPLACEMENT

3/8

:

Fo R

Figure 7-1, Bottom View of the Infusion System,

1. OFF/CHA GE.
2. D AC ( ) .
3. .
4. 3/8 .

   N E . D .

5. .
6. .
7. A .
8. C AC ( ) .

. H , P *Section 5.2*.

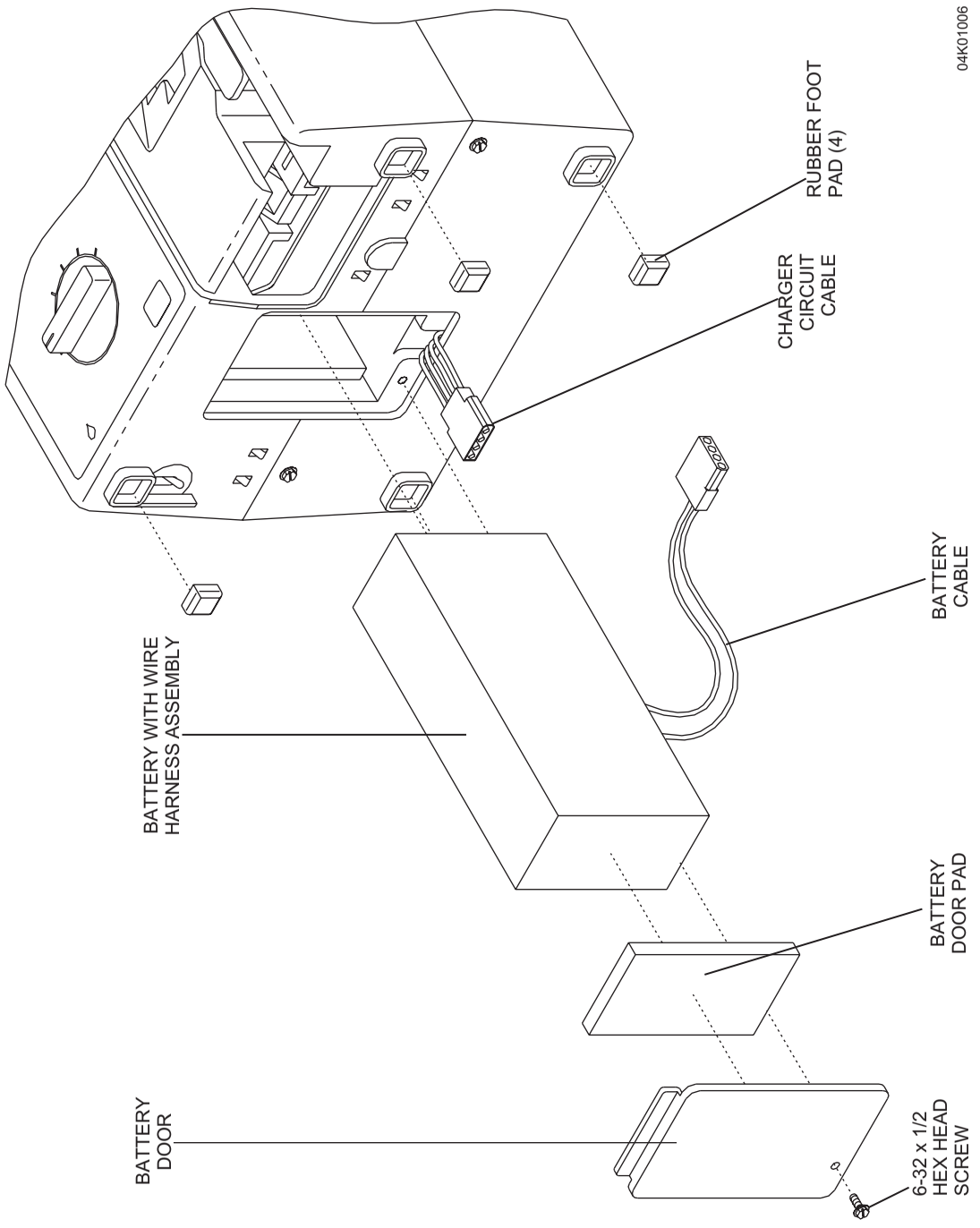

Figure 7-1. Bottom View of the Infusion System

7.2.4
BATTERY WITH WIRE HARNESS ASSEMBLY, BATTERY DOOR, AND BATTERY DOOR PAD REPLACEMENT

[illegible]

[illegible]:

6-32 x 1/2, [illegible]
[illegible]
[illegible]
[illegible]

[illegible] *Figure 7-1*, [illegible]:

1. [illegible] OFF/CHA GE.
2. D [illegible] AC ([illegible]) [illegible].
3. [illegible].
4. [illegible].
5. I [illegible]. I [illegible]. D [illegible].
6. D [illegible]. P [illegible].
7. C [illegible].

   No [illegible].

8. I [illegible].
9. [illegible].
10. C [illegible] AC ([illegible]) [illegible].

[illegible] P [illegible] *Section 5.2*.

7.2.5
SEPARATING THE FRONT ENCLOSURE ASSEMBLY, REAR ENCLOSURE ASSEMBLY, AND MAIN CHASSIS ASSEMBLY

CAUTION: Use proper ESD grounding techniques when handling components. Wear an antistatic wrist strap and use an ESD-protected workstation. Store the PWA in an antistatic bag before placing it on any surface.

Figure 7-2, Front Enclosure, Main Chassis Assembly, and Rear Enclosure,

1. OFF/CHA GE.
2. AC ( )
3. *Section 7.2.4*.
4. .
5. .
6. MC /D P A J3 MC P A *(see Figure 7-2)*.
7. (LM) MC /B J10 MC P A.
8. (F D P) D D P /MC J11 MC P A.
9. P A .

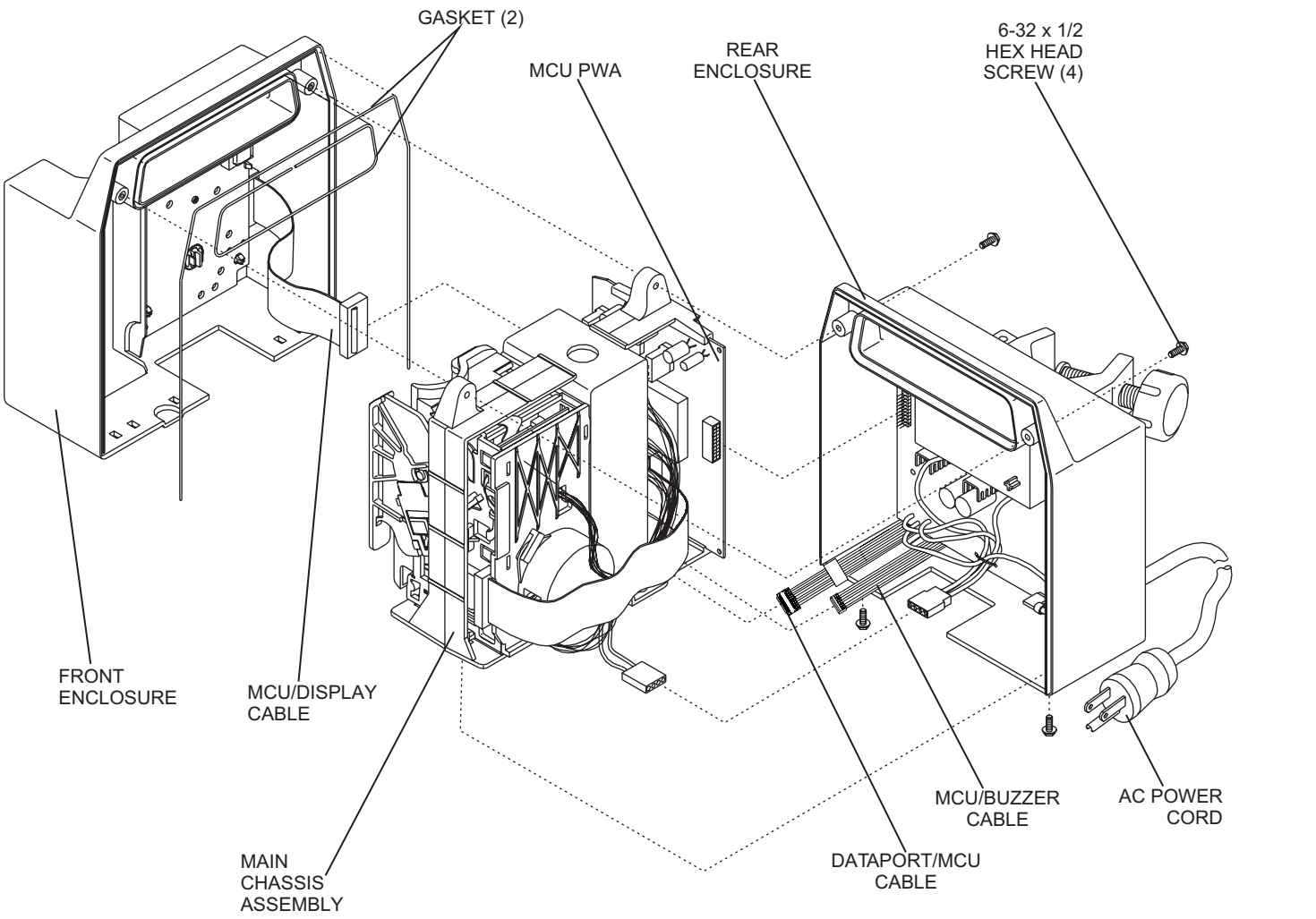

Figure 7-2. Front Enclosure, Main Chassis Assembly, and Rear Enclosure

7.2.6
FRONT ENCLOSURE ASSEMBLY, REAR ENCLOSURE ASSEMBLY, OR MAIN CHASSIS ASSEMBLY REPLACEMENT

[illegible] .

[illegible] :

[illegible]

CAUTION: Use proper ESD grounding techniques when handling components. Wear an antistatic wrist strap and use an ESD-protected workstation. Store the PWA in an antistatic bag before placing it on any surface.

[illegible] *Figure 7-2*, [illegible] :

1. [illegible] *Section 7.2.5*.
2. [illegible] *Section 7.2.7, Front Enclosure Assembly Component Replacement*.
3. [illegible] *Section 7.2.8, Rear Enclosure Assembly Component Replacement*.
4. [illegible] *Section 7.2.9, Main Chassis Assembly Component Replacement*.
5. I[illegible] *(see Figure 7-2)*.
6. [illegible] *Section 7.2.7, Section 7.2.8,* [illegible] *Section 7.2.9*.
7. [illegible] .

   No (LM D_ P) [illegible] D_ P /MC [illegible] *(see Figure 7-12, DataPort Assembly (Domestic)* [illegible] *Figure 7-13, DataPort Assembly (International))*.

8. C[illegible] AC (_) [illegible] .

[illegible] P *Section 5.2*.

7.2.7
FRONT ENCLOSURE ASSEMBLY COMPONENT REPLACEMENT

F [illegible] :

- ❑ D [illegible] P A [illegible] MC / [illegible]
- ❑ [illegible]
- ❑ C [illegible]
- ❑ F [illegible]

[illegible] *Figure 7-3, Display PWA and MCU/Display Cable*, [illegible] *Figure 7-4, Front Enclosure Assembly Components*, [illegible]

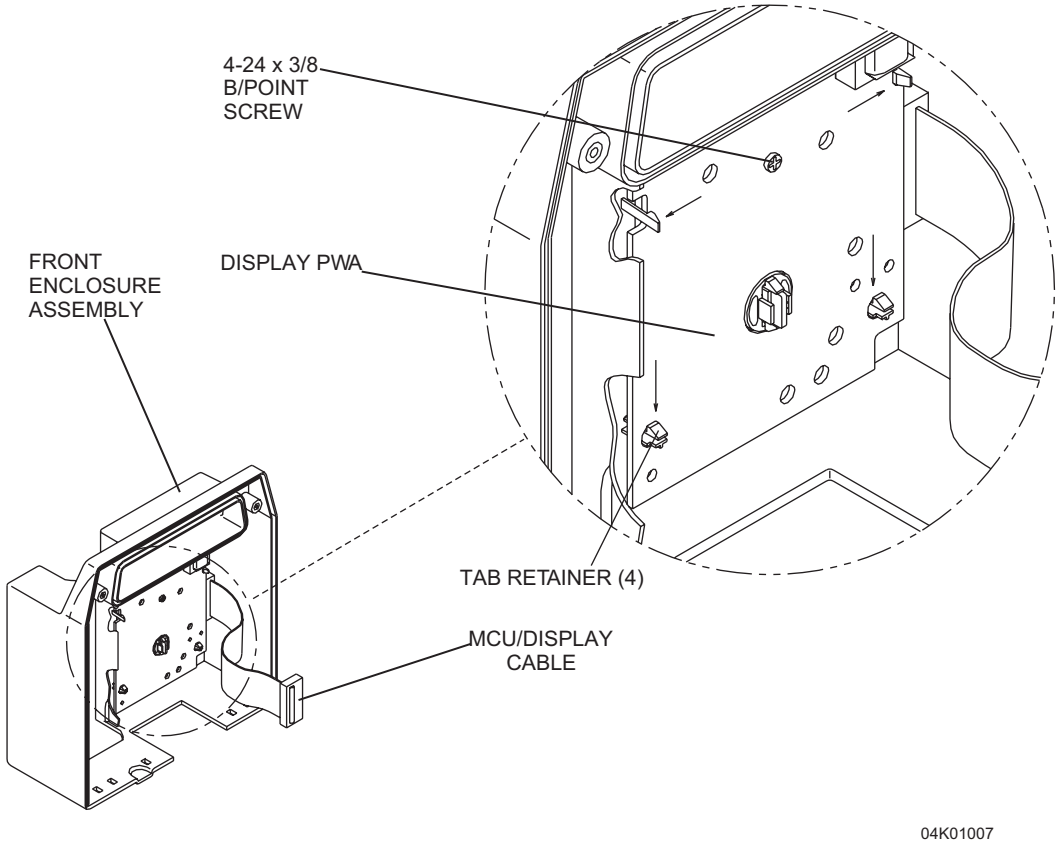

Figure 7-3. Display PWA and MCU/Display Cable

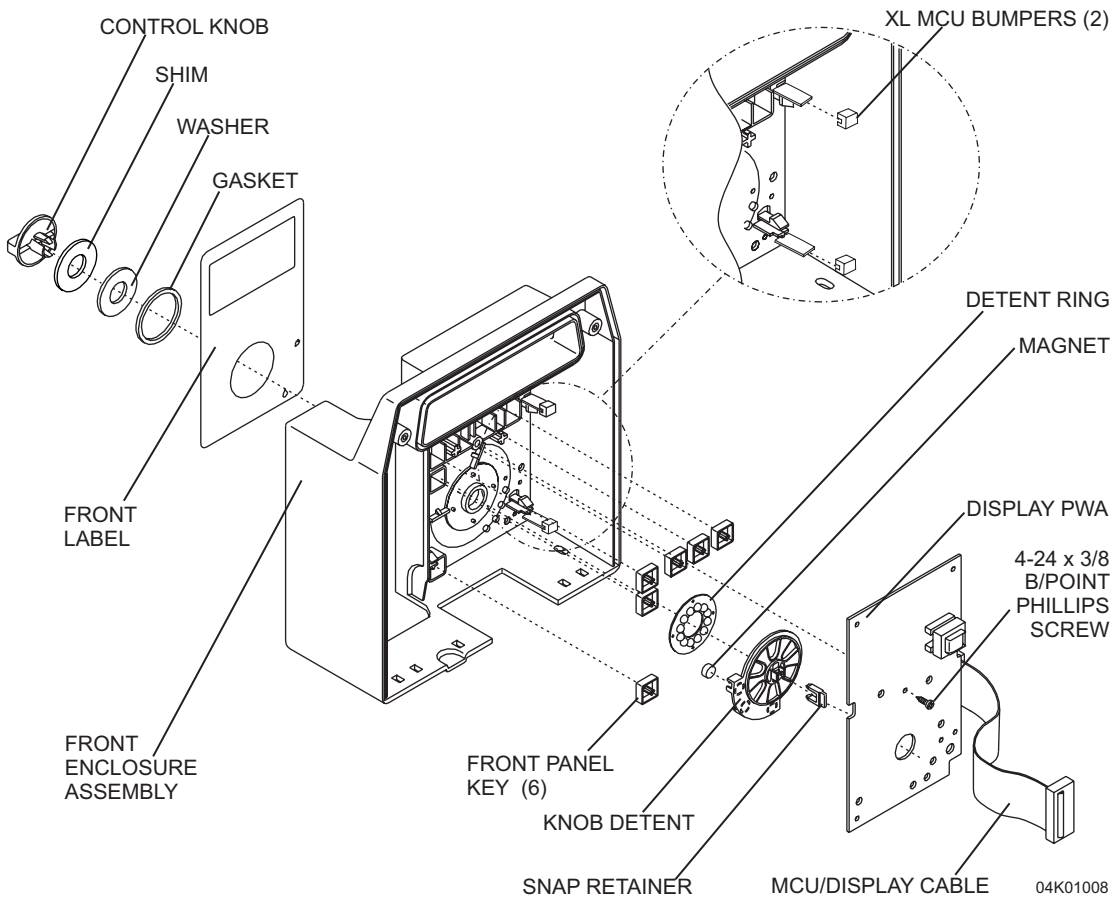

Figure 7-4. Front Enclosure Assembly Components

7.2.7.1

DISPLAY PWA AND MCU/DISPLAY CABLE REPLACEMENT

N .
2 P .

:

CAUTION: Use proper ESD grounding techniques when handling components. Wear an antistatic wrist strap and use an ESD-protected workstation. Store the PWA in an antistatic bag before placing it on any surface.

Figure 7-3 *Figure 7-4*,
:

1. *Section 7.2.5*.

2. P
3. L MC B
4. N. 2 P P A
5. D P A P A
6. D MC / P A. MC /
7. I P A
8.

N (LM D P) D P /MC

9. C AC ( )

P A MC / P

Section 5.2.

7.2.7.2

FRONT PANEL KEY REPLACEMENT

N. 2 P

:

K F

CAUTION: Use proper ESD grounding techniques when handling components. Wear an antistatic wrist strap and use an ESD-protected workstation. Store the PWA in an antistatic bag before placing it on any surface.

Figure 7-4, :

1. *Section 7.2.5*.
2. P A *Section 7.2.7.1*.
3. *(see Figure 7-4)*.
4.

N (LM D P) D P /MC

5. C AC ( )

P *Section 5.2*.

7.2.7.3

CONTROL KNOB, KNOB DETENT, WASHER, GASKET, SNAP RETAINER, AND DETENT RING REPLACEMENT

No. 2 P

:

CAUTION: Use proper ESD grounding techniques when handling components. Wear an antistatic wrist strap and use an ESD-protected workstation. Store the PWA in an antistatic bag before placing it on any surface.

Figure 7-4, :

1. *Section 7.2.5*.
2. P A *Section 7.2.7.1*.
3. *Section 7.2.7.2*.
4. .
5. .
6. I . I . I .
7. I .
   - F .
   - I .
   - I .
   - P .
   - OFF/CHA GE.
8. P . P . A .
9. . P .

   No OFF/CHA GE, *Figure 7-4*.
10. .
11. .

Note: (LM ... D ... P ...) ... D ... P ... /MC ...

12. C ... AC (...) ...

... P ... Section 5.2.

7.2.7.4
FRONT PANEL LABEL REPLACEMENT

... :

L ... F ... R

... Figure 7-4, ... :

1. ... OFF/CHA ... GE.
2. D ... AC (...) ...
3. ...
4. ...
5. ...

... H ... P ... Section 5.2.

7.2.8
REAR ENCLOSURE ASSEMBLY COMPONENT REPLACEMENT

... :

- ❑ F
- ❑ P ... P A
- ❑ ...
- ❑ AC (...) ...
- ❑ AC (...) ... (I ...)
- ❑ AC ... , EMI ...
- ❑ L C AC ...
- ❑ D ... P ... /MC ...
- ❑ L C D ... P ... /MC ...
- ❑ P ...
- ❑ P ...
- ❑ B ... P A ... MC / ...

[illegible]

7.2.8.1

FUSE REPLACEMENT

[illegible]

[illegible]:

Fu 0.5A, 250V, Sb 5 x 20 m
Cu Fu 5 x 20 m

[illegible] *Figure 7-5, Fuse Replacement (115 VAC)* [illegible] *Figure 7-6, Fuse Replacement (220 VAC)*, [illegible]:

1. [illegible] *Section 7.2.5*.
2. [illegible] P A [illegible].

   CAUTION: Confirm replacement fuse rating is identical to fuse rating indicated on the power supply PWA or equipment damage may occur.

3. [illegible].

   ✎ **Nb** (LM D P) [illegible] D P /MC [illegible].

4. C [illegible] AC ([illegible]) [illegible].

[illegible] P [illegible] *Section 5.2*.

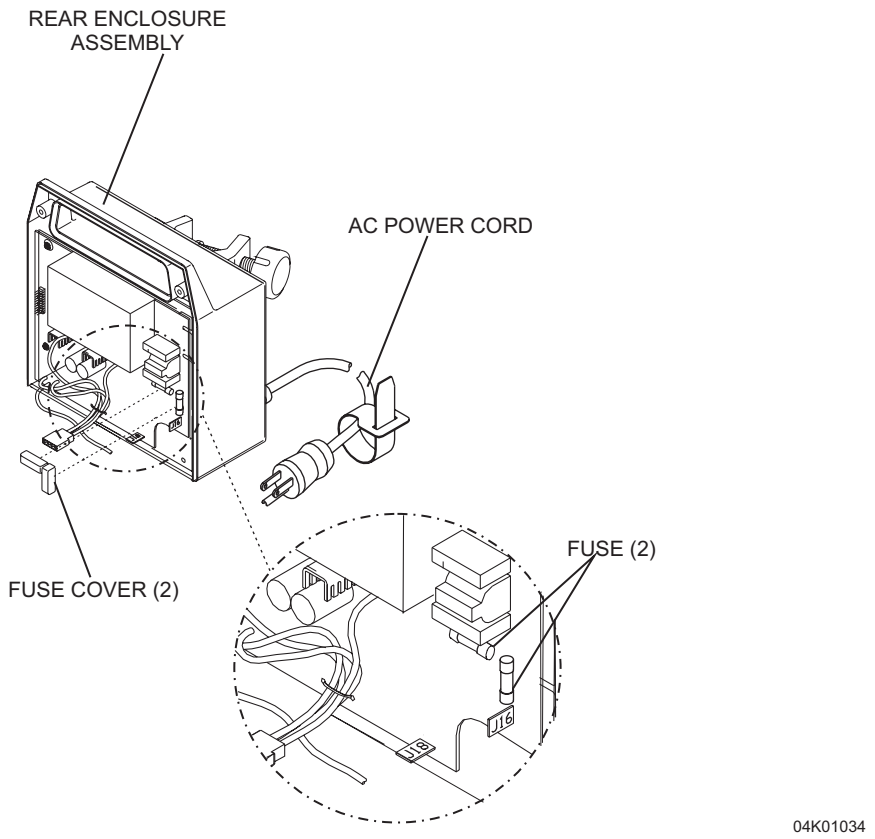

Figure 7-5. Fuse Replacement (115 VAC)

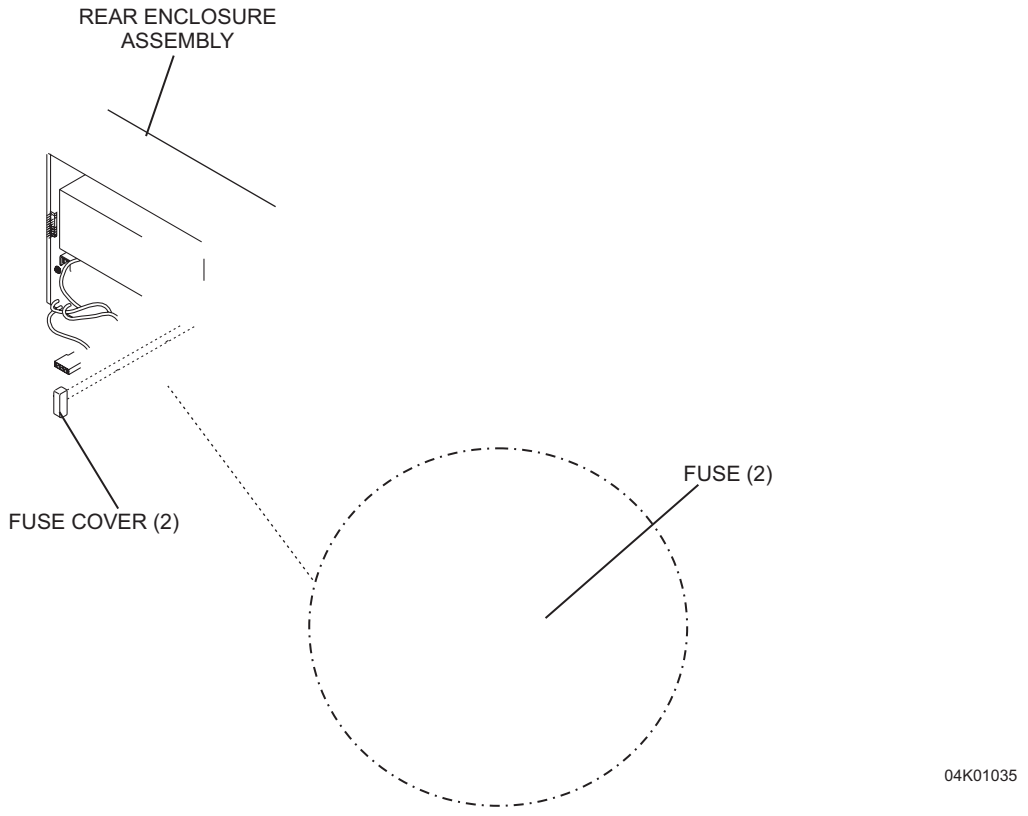

Figure 7-6. Fuse Replacement (220 VAC)

7.2.8.2

POWER SUPPLY PWA REPLACEMENT

1/4 .

:

6-32 x5/16, H

CAUTION: Use proper ESD grounding techniques when handling components. Wear an antistatic wrist strap and use an ESD-protected workstation. Store the PWA in an antistatic bag before placing it on any surface.

P A, *Figure 7-7, Power Supply PWA*, :

1. *Section 7.2.5*.
2. D AC ( ) J16 *(see Table 7-1, Wire Color Coding)*.
3. D AC ( ) J17 *(see Table 7-1)*.
4. F P, L : AC ( ) J18 *(see Table 7-1)*.
5. 1/4 , P A .
6. I P A.
7. C AC ( ) J17 *(see Table 7-1)*.
8. C AC ( ) J16 *(see Table 7-1)*.
9. F P, L : AC ( ) J18 *(see Table 7-1)*.
10. **N** (LM D P) D P /MC .
11. C AC ( ) .

P A , P *Section 5.2*.

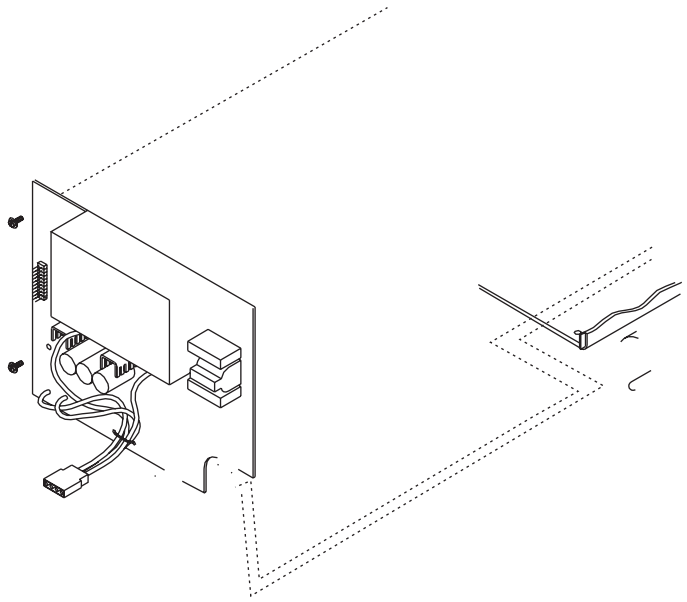

Figure 7-7. Power Supply PWA

Table 7-1. Wire Color Coding

Voltage	Wire Color	Signal	Connects To
	Black	Hot (line)	J16
	White	Neutral	J17
	Green	Ground	Rear panel
	Brown	Hot (line)	J16
	Blue	Neutral	J17
	Yellow/green	Earth	J18

7.2.8.3

VELCRO RETAINER STRAP REPLACEMENT

N[illegible]

[illegible]:

[illegible]1.75 [illegible]10 [illegible]

[illegible] *(see Figure 7-7)*.

[illegible]. H[illegible] P[illegible] *Section 5.2*.

7.2.8.4

AC (MAINS) POWER CORD AND STRAIN RELIEF BUSHING REPLACEMENT

115V [illegible] 1/4 [illegible].

[illegible]:

C[illegible]AC [illegible]
[illegible]
N[illegible]6-32, KE[illegible]
[illegible] #6
[illegible]6-32 x3/4, H[illegible]
[illegible]6-32 x1, H[illegible]

CAUTION: Use proper ESD grounding techniques when handling components. Wear an antistatic wrist strap and use an ESD-protected workstation. Store the PWA in an antistatic bag before placing it on any surface.

[illegible] AC ([illegible]) [illegible] *Figure 7-8, AC Power Cord (115 VAC - Plum XL)* [illegible] *Figure 7-9, AC Power Cord (115 VAC - Plum XLM)*, [illegible]:

1. [illegible] *Section 7.2.5*.
2. [illegible] 1/4 [illegible].
3. D[illegible].
4. D[illegible] AC ([illegible]) [illegible] J16 *(see Table 7-1, Wire Color Coding)*.
5. D[illegible] AC ([illegible]) [illegible] J17 *(see Table 7-1)*.
6. [illegible].
7. P[illegible] AC ([illegible]) [illegible].
8. I[illegible] AC ([illegible]) [illegible].

9. C● AC ( ) ● ● ● J17 *(see Table 7-1)*.
10. C● AC ( ) ● ● ● J16 *(see Table 7-1)*.
11. C● 1/4
12.

✎ **N●** (LM D Po) D Po /MC

13. C● AC ( ) ●.

● AC ( ) P *Section 5.2*.

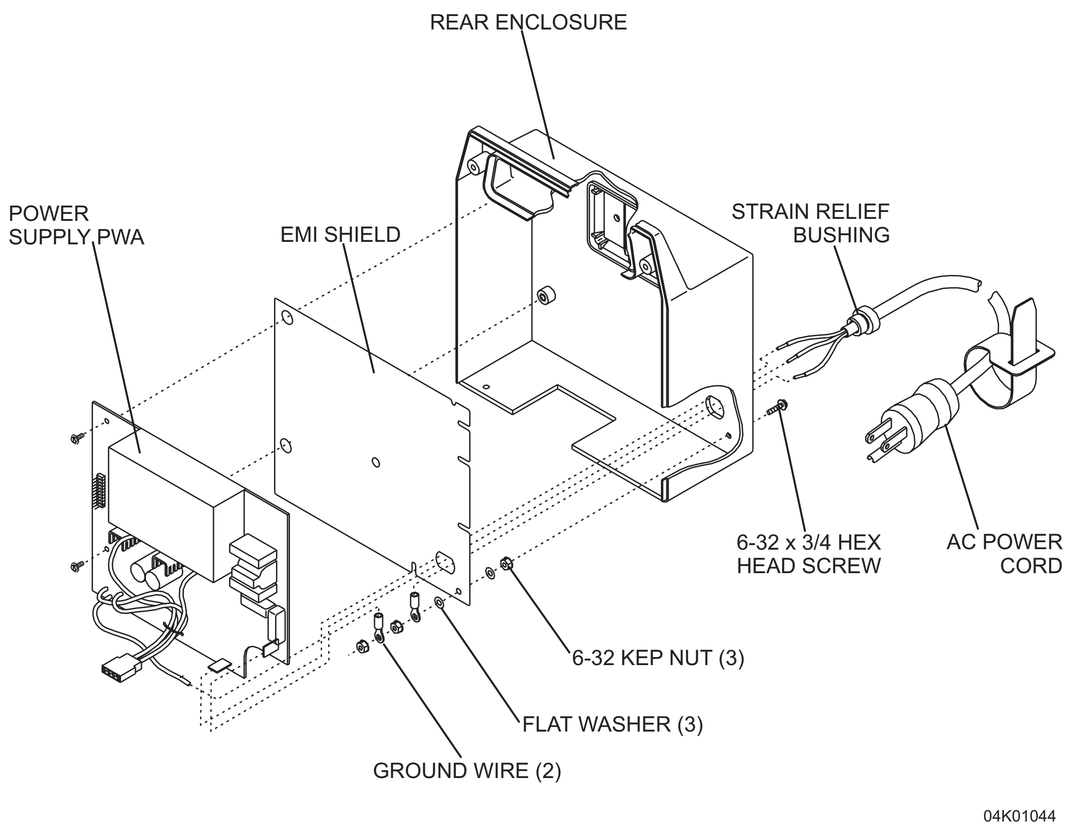

Figure 7-8. AC Power Cord (115 VAC - Plum XL)

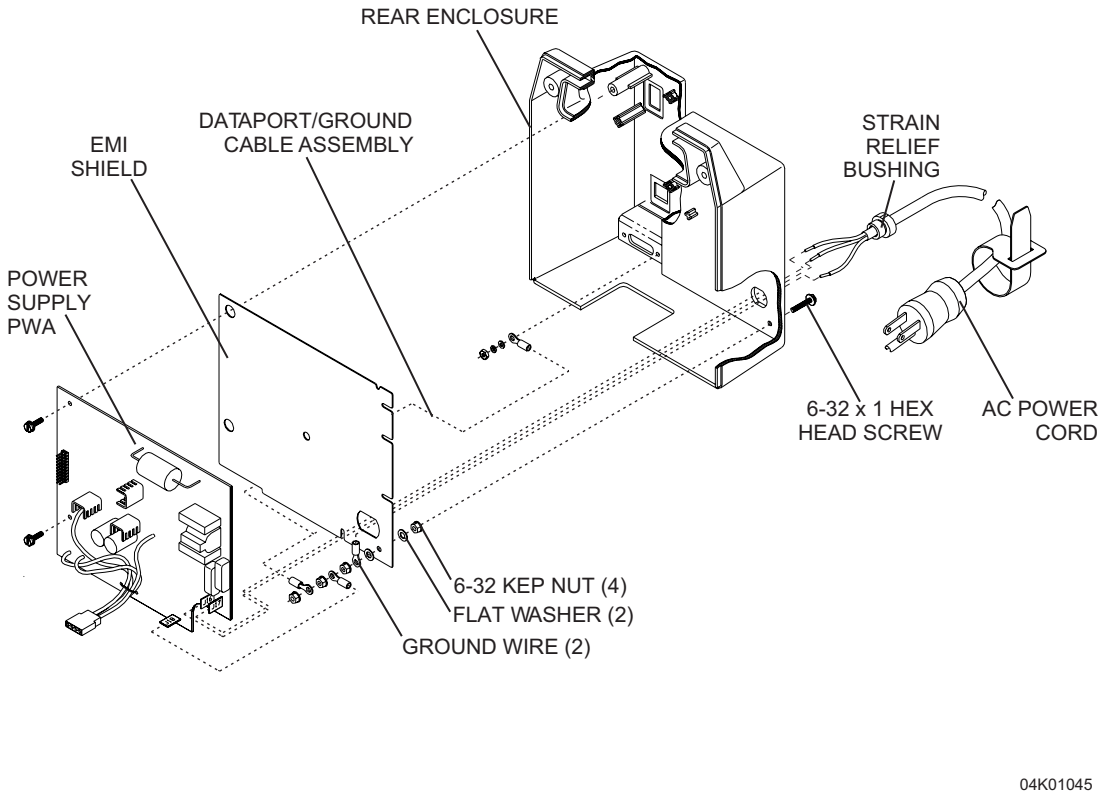

Figure 7-9. AC Power Cord (115 VAC - Plum XLM)

7.2.8.5

AC (MAINS) POWER CORD REPLACEMENT (INTERNATIONAL)

220 V

N

:

C AC H

AC ( ) , *Figure 7-10, AC Power Cord (220 VAC - Plum XLM)* *Figure 7-11, AC Power Cord (220 VAC - Plum XLM)*, .

AC ( ) . H , P *Section 5.2*.

7.2.8.6

AC RECEPTACLE, EMI SHIELD, AND EQUIPOTENTIAL POST REPLACEMENT

220 V

[illegible] 6 [illegible]

[illegible] :

[illegible]AC C[illegible]
[illegible]E[illegible]
[illegible]EM
N[illegible]H[illegible]6m
[illegible]L[illegible]
[illegible]F[illegible]
[illegible]F[illegible]1/4 [illegible]

CAUTION: Use proper ESD grounding techniques when handling components. Wear an antistatic wrist strap and use an ESD-protected workstation. Store the PWA in an antistatic bag before placing it on any surface.

[illegible] AC [illegible] *Figure 7-10*, [illegible] :

1. [illegible] *Section 7.2.5*.
2. [illegible] P A [illegible] *Section 7.2.8.2*.
3. [illegible] EMI [illegible] EMI [illegible].
4. [illegible] *(see Figure 7-10)*.
5. [illegible].
6. [illegible] AC [illegible] I [illegible].
7. [illegible].

   N[illegible] (LM [illegible] P[illegible]) [illegible] D[illegible] P[illegible] /MC [illegible].

8. C[illegible] AC ([illegible]) [illegible].

[illegible] AC [illegible], EMI [illegible] P [illegible] *Section 5.2*.

Figure 7-10. AC Power Cord (220 VAC - Plum XLM)

7.2.8.7

LIFECARE AC RECEPTACLE, BRACKET, GASKET, SEAL, AND EQUIPOTENTIAL POST REPLACEMENT

10 10 1/4 3/16 .

:

AC
AC
AC
AC
4-40

CAUTION: Use proper ESD grounding techniques when handling components. Wear an antistatic wrist strap and use an ESD-protected workstation. Store the PWA in an antistatic bag before placing it on any surface.

AC *Figure 7-11, AC Power Cord (220 VAC - Plum XLM)*, :

1. [illegible] Section 7.2.5.
2. [illegible] P A[illegible] Section 7.2.8.2.
3. C[illegible] EMI [illegible].
4. [illegible] 10 [illegible].
5. [illegible] D[illegible] P[illegible] / [illegible]. I[illegible] 1/4 [illegible] 4-40 [illegible] D[illegible] P[illegible].
6. [illegible] EMI [illegible].
7. [illegible] 3/16 [illegible] 4-40 [illegible] AC [illegible].
8. [illegible] 10 [illegible] AC [illegible]. I[illegible].
9. [illegible] AC [illegible].
10. [illegible] AC [illegible].
11. [illegible] AC [illegible].
12. I[illegible] AC [illegible].
13. [illegible].

Note: [illegible] (LM [illegible] D[illegible] P[illegible]) [illegible] D[illegible] P[illegible] /MC [illegible].

14. C[illegible] AC ([illegible]) [illegible].

[illegible] AC [illegible] P[illegible] Section 5.2.

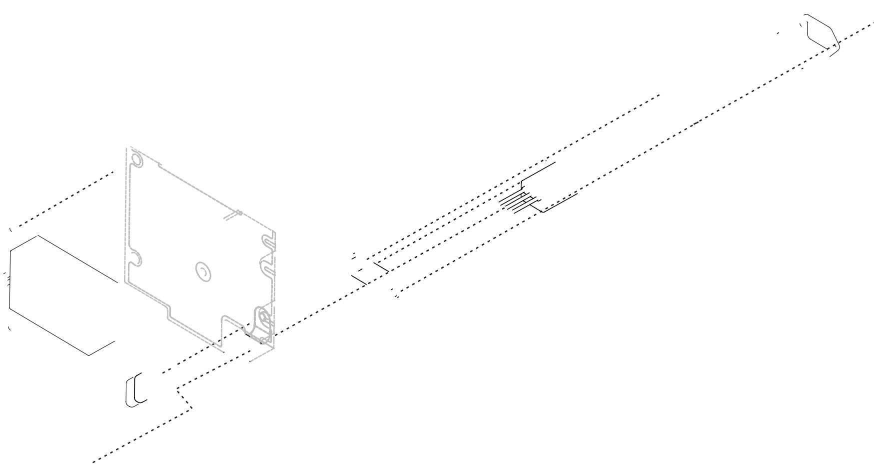

Figure 7-11. AC Power Cord (220 VAC - Plum XLM)

7.2.8.8

DATAPORT/MCU CABLE ASSEMBLY REPLACEMENT (XLM WITH DATAPORT)

[illegible] 1/4 [illegible] 3/16 [illegible].

[illegible]:

EMI [illegible]
Kit [illegible] 4-40
Kit [illegible] 4-40 x 5/16
[illegible] MCU
[illegible]

CAUTION: Use proper ESD grounding techniques when handling components. Wear an antistatic wrist strap and use an ESD-protected workstation. Store the PWA in an antistatic bag before placing it on any surface.

Note [illegible].

[illegible] /MC [illegible] *Figure 7-12, DataPort Assembly (Domestic)*, [illegible]:

1. [illegible] *Section 7.2.5*.
2. [illegible] *Section 7.2.8.2*.
3. [illegible] EMI [illegible].
4. [illegible] 3/16 [illegible].
5. [illegible].
6. [illegible] /MC [illegible].
7. [illegible] EMI [illegible].
8. [illegible].

   Note (LM [illegible]) [illegible] /MC [illegible].

9. C[illegible] AC ([illegible]) [illegible].

[illegible] /MC [illegible] *Section 5.2* [illegible] *Section 5.5*.

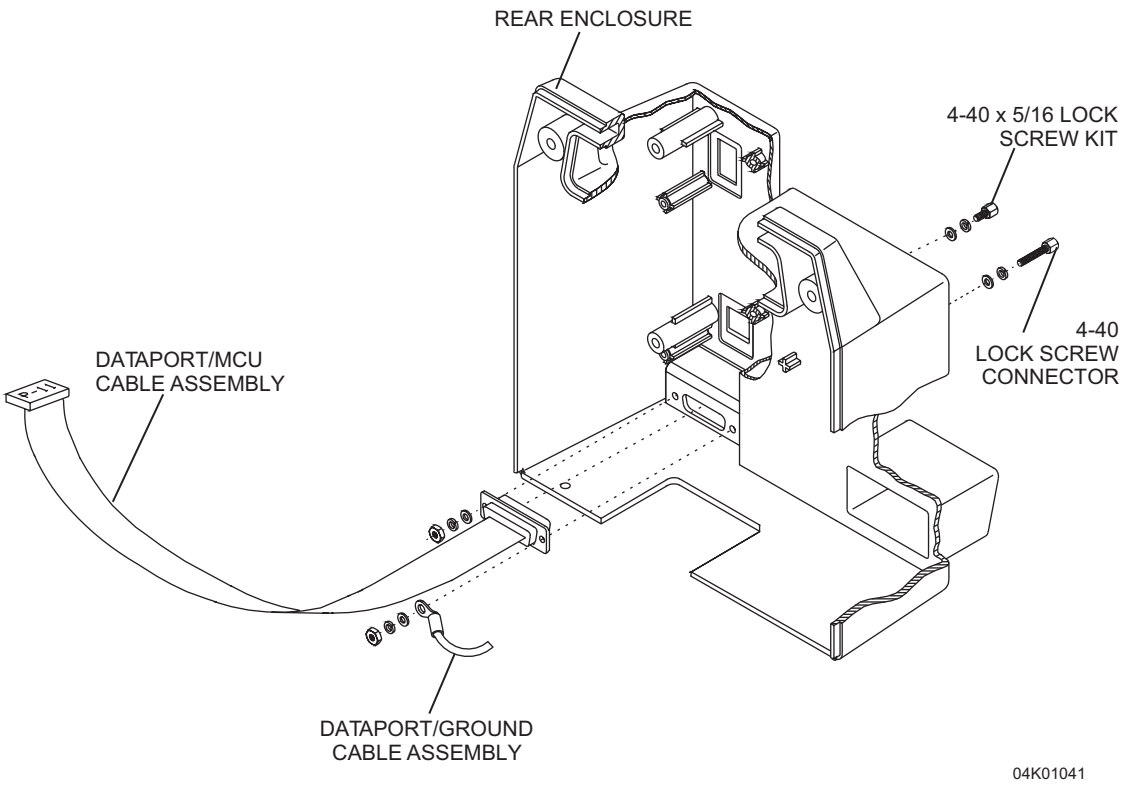

Figure 7-12. DataPort Assembly (Domestic)

7.2.8.9

LIFECARE DATAPORT/MCU CABLE ASSEMBLY REPLACEMENT (XLM WITH DATAPORT)

✓EN-2 [illegible] 1/4 [illegible], 3/16 [illegible] 5/16 [illegible].

[illegible]:

Kit, SLk 4-40
Ajn Ch DP/MCU
Gk DP
Bk DP
Cp DP
[illegible]#4
S 4-40 x 1/4, Hx Hd

CAUTION: Use proper ESD grounding techniques when handling components. Wear an antistatic wrist strap and use an ESD-protected workstation. Store the PWA in an antistatic bag before placing it on any surface.

✎ **No** D[illegible] D_P[illegible].

[illegible] D_P[illegible]/MC [illegible] *Figure 7-13, DataPort Assembly (International)*, [illegible]:

1. [illegible] *Section 7.2.5*.
2. [illegible] P A [illegible] *Section 7.2.8.2*.
3. [illegible] 1/4 [illegible] D_P[illegible]. [illegible] D_P[illegible]. I [illegible].
4. [illegible] 3/16 [illegible] 4-40 [illegible] 1/4 [illegible] 4-40 [illegible].
5. D [illegible] D_P[illegible]/[illegible].
6. [illegible] D_P[illegible].
7. [illegible] D_P[illegible].
8. [illegible] D_P[illegible]/MC [illegible]. I [illegible].
9. [illegible] P A [illegible].
10. J[illegible].

    ✎ **No** (LM D_P[illegible]) [illegible] D_P[illegible]/MC [illegible].

11. C[illegible] AC ([illegible]) [illegible].

[illegible] D_P[illegible]/MC [illegible] P [illegible] *Section 5.2* [illegible] D_P[illegible] *Section 5.5*.

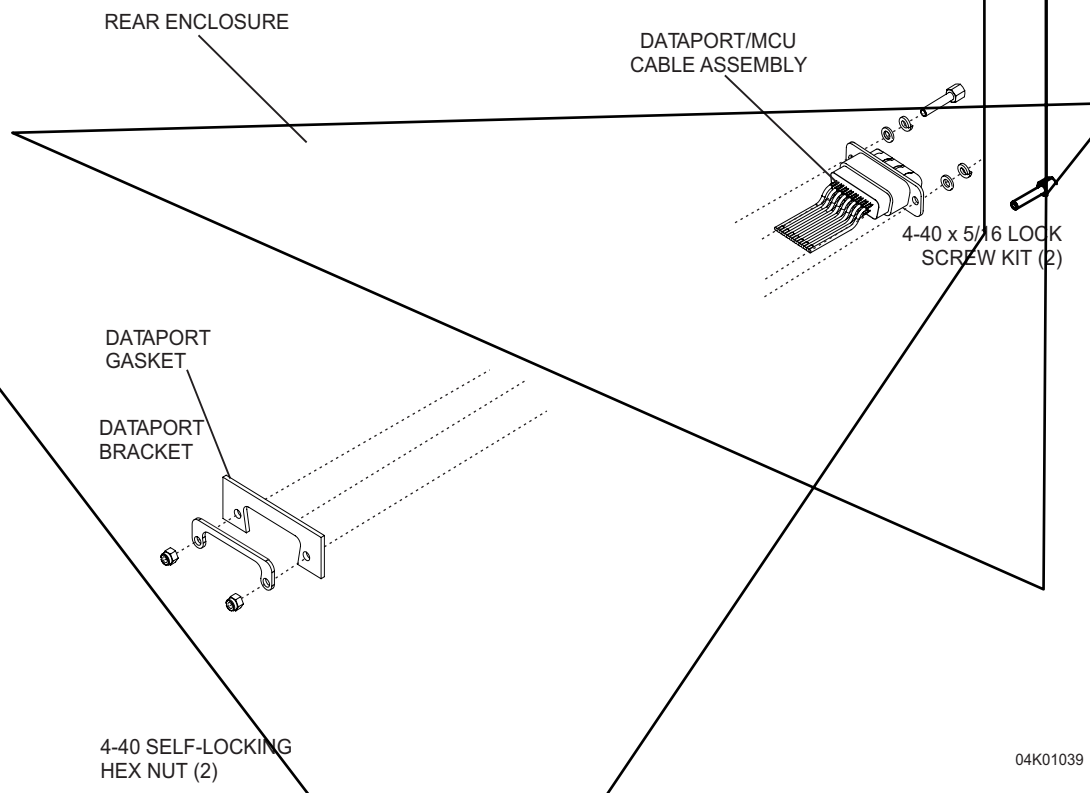

Figure 7-13. DataPort Assembly (International)

7.2.8.10

POLE CLAMP EXTRUSION, POLE CLAMP BACKING PLATE, AND ADHESIVE-BACKED INSULATOR REPLACEMENT

5/16

CAUTION: Use proper ESD grounding techniques when handling components. Wear an antistatic wrist strap and use an ESD-protected workstation. Store the PWA in an antistatic bag before placing it on any surface.

Figure 7-14, XL Series Pole Clamp,

1. *Section 7.2.5*.
2. P A *Section 7.2.8.2*.

3. G
4. 5/16
5. I
6. I 5/16
7. C P

CAUTION: Make sure the insulator covers the entire backing plate. If the backing plate is exposed, the power supply PWA may be damaged when power is applied to the infusion system.

8. I P A
9. J
   N (LM D P) D P /MC
10. C AC ( )

P *Section 5.2*.

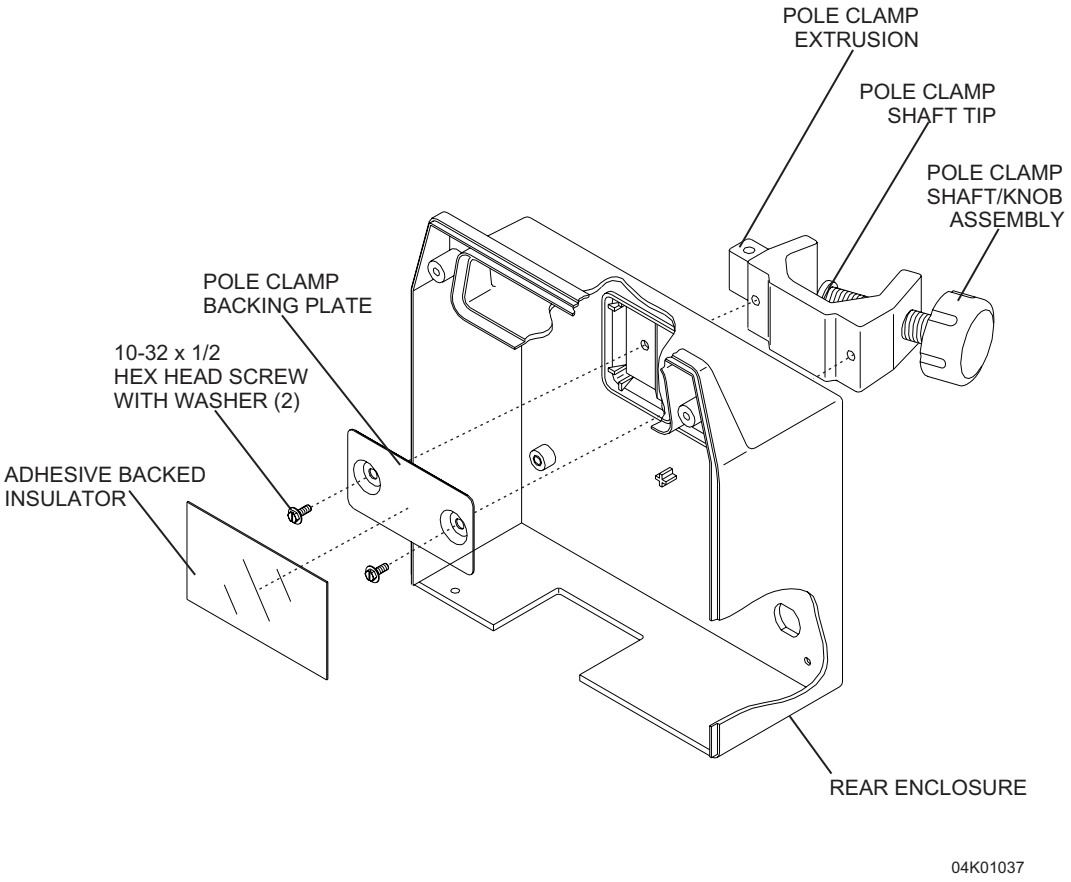

Figure 7-14. XL Series Pole Clamp

7.2.8.11

POLE CLAMP SHAFT/KNOB ASSEMBLY AND POLE CLAMP SHAFT TIP REPLACEMENT

[illegible]

[illegible]

[illegible]

[illegible] *Figure 7-14*, [illegible]:

1. [illegible] OFF/CHA GE.
2. D [illegible] AC ([illegible]) [illegible].
3. [illegible]

[illegible]

4. [illegible]

5. I [illegible]

6. P [illegible]

7. C[illegible] AC (_) [illegible].

_ [illegible]
H[illegible] P *Section 5.2*.

7.2.8.12

BUZZER PWA AND MCU/BUZZER CABLE REPLACEMENT

[illegible] 1/4 [illegible].

_ _ [illegible] :

[illegible]
[illegible]
[illegible]
[illegible]
[illegible] 6-32 x 3/8, H[illegible]

CAUTION: Use proper ESD grounding techniques when handling components. Wear an antistatic wrist strap and use an ESD-protected workstation. Store the PWA in an antistatic bag before placing it on any surface.

[illegible] P A, [illegible] *Figure 7-15, Buzzer PWA*, [illegible] :

1. [illegible] P A *Section 7.2.8.2*.
2. [illegible] EMI [illegible].
3. [illegible] P A [illegible].
4. I MC /B [illegible].
5. [illegible] P A [illegible].
6. I [illegible] *(see Figure 7-15)*.
7. I _ _ P A.
8. _ [illegible].

[illegible] P A _ , [illegible] P *Section 5.2*.

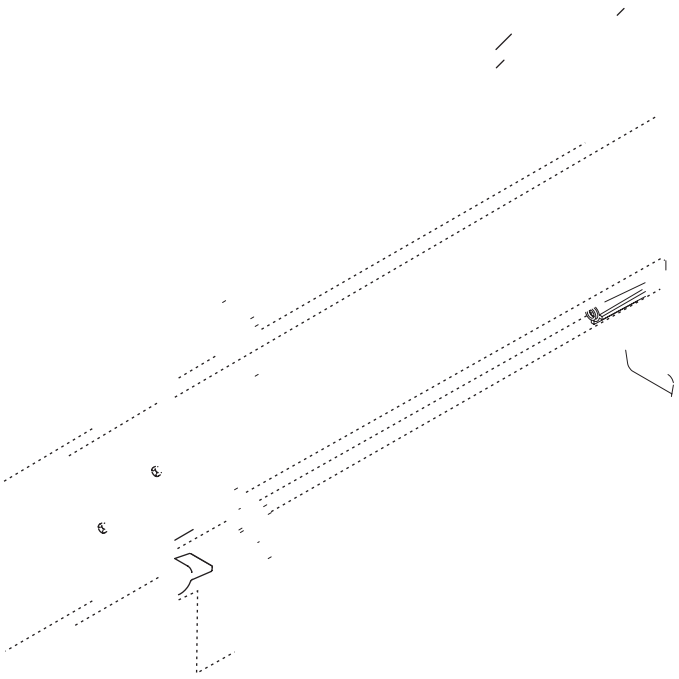

Figure 7-15. Buzzer PWA

7.2.9
MAIN CHASSIS ASSEMBLY COMPONENT REPLACEMENT

M

- ❑ MC P A /MC
- ❑ M
- ❑ C
- ❑ O

N MC P A ; ,
MC P A .

7.2.9.1

MCU PWA AND SENSOR/MCU CABLE ASSEMBLY REPLACEMENT

[illegible]

[illegible]:

[illegible]
[illegible]
[illegible]

CAUTION: Use proper ESD grounding techniques when handling components. Wear an antistatic wrist strap and use an ESD-protected workstation. Store the PWA in an antistatic bag before placing it on any surface.

[illegible] *Figure 7-16, Exploded View of the Main Chassis Assembly* [illegible] *Figure 7-17, Top View of the Main Chassis Assembly*, [illegible]:

1. [illegible] *Section 7.2.5*.
2. [illegible]
   - [illegible] J5
   - [illegible] J7
   - [illegible] J8
   - [illegible] J9.
3. [illegible]
4. [illegible]

   Note [illegible]

5. [illegible]
6. [illegible]
   - [illegible] J7
   - [illegible] J8
   - [illegible] J9
   - [illegible] J5
7. [illegible] *Figure 7-17*.

   Note [illegible] 14.

8. [illegible]
9. [illegible]

10. I MC P A P A.
11. I .
12. .
13. .
14. .

Note (LM D P) D P /MC .

15. C AC ( ) .

MC P A , P *Section 5.2*.

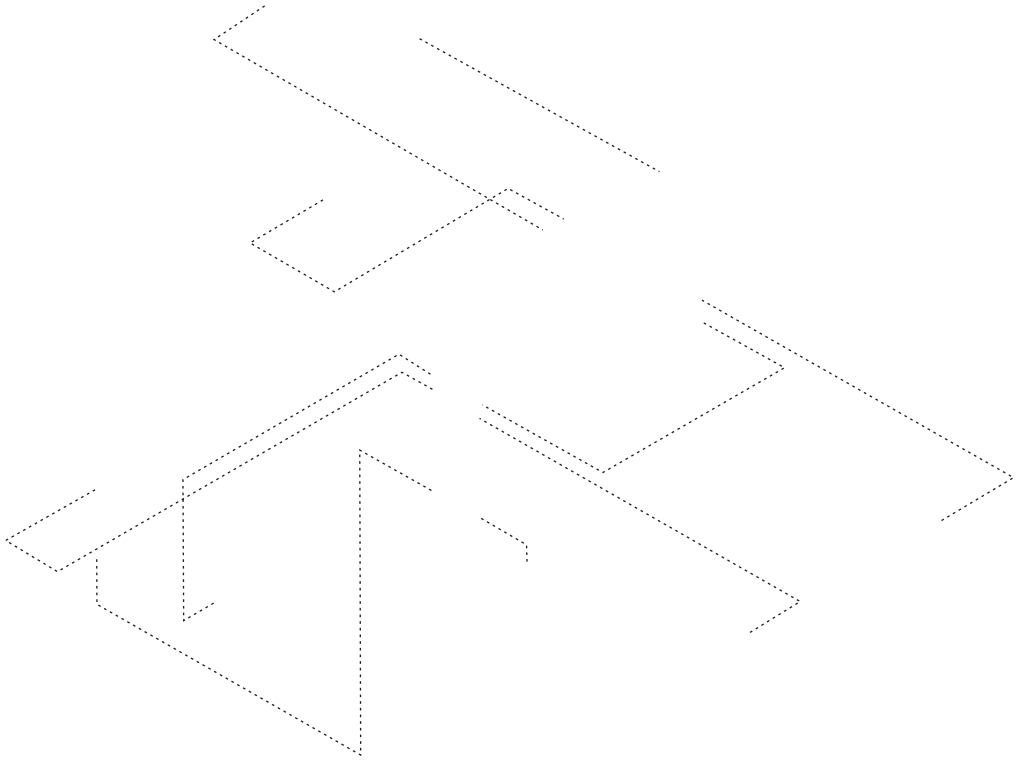

Figure 7-16. Exploded View of the Main Chassis Assembly

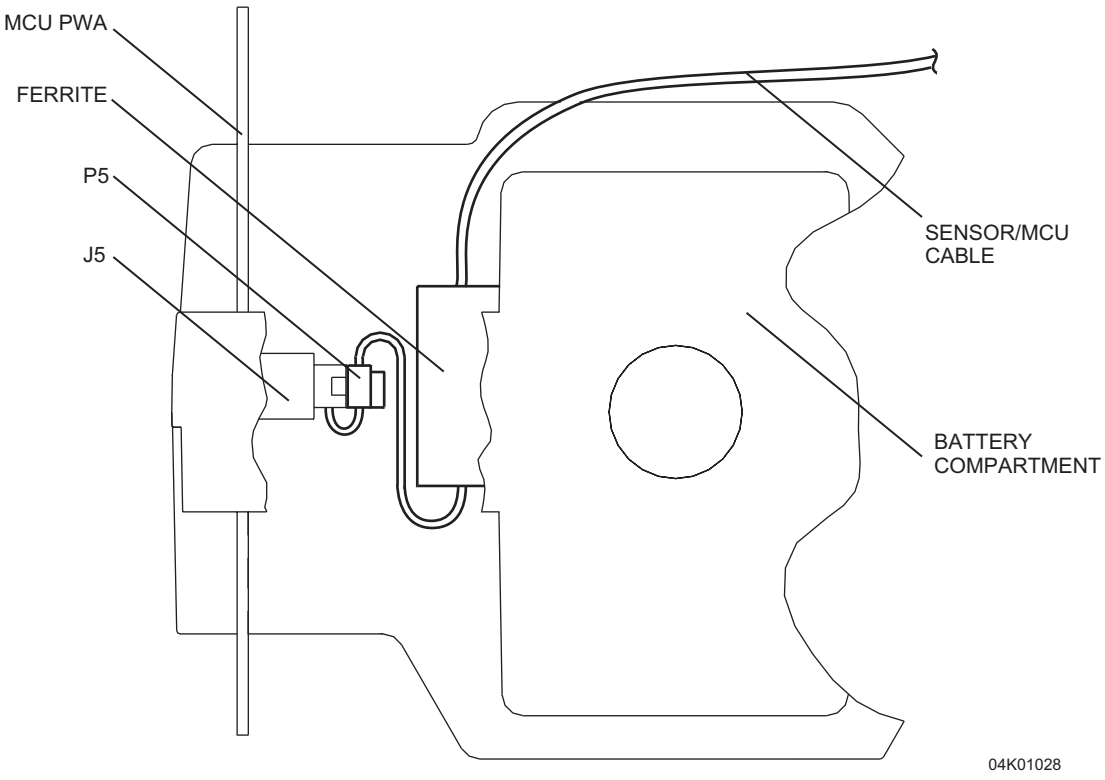

Figure 7-17. Top View of the Main Chassis Assembly

7.2.9.2

MECHANISM ASSEMBLY REPLACEMENT

[illegible]

[illegible]:

[illegible]

CAUTION: Use proper ESD grounding techniques when handling components. Wear an antistatic wrist strap and use an ESD-protected workstation. Store the PWA in an antistatic bag before placing it on any surface.

[illegible] *Figure 7-16*, [illegible]:

1. [illegible] *Section 7.2.5*.

2. [illegible] MC P A [illegible] *Section 7.2.9.1*. D [illegible] /MC [illegible] J6.
3. [illegible]

   No (I [illegible]) [illegible] . I [illegible]

4. [illegible]
5. [illegible]
6. C [illegible] /MC [illegible] J6. [illegible] MC P A [illegible]
7. J [illegible]

   No (LM [illegible] P [illegible]) [illegible] P [illegible] /MC [illegible]

8. C [illegible] AC ([illegible]) [illegible]
9. (LM [illegible] P [illegible]) P [illegible] P [illegible] :
   - E [illegible] *Section 6.2.3*.
   - [illegible] *Section 6.2.3.4.1*. [illegible]
   - [illegible] *Section 6.2.3.4.3*. [illegible]

[illegible] P [illegible] *Section 5.2*.

7.2.9.3

CASSETTE DOOR AND MECHANISM SHIELD REPLACEMENT

[illegible]

[illegible] :

[illegible]
[illegible]
[illegible]
[illegible]

CAUTION: Use proper ESD grounding techniques when handling components. Wear an antistatic wrist strap and use an ESD-protected workstation. Store the PWA in an antistatic bag before placing it on any surface.

[illegible] *Figure 7-18, Mechanism Shield Replacement*; *Figure 7-19* [illegible] *Figure 7-21, Cassette Door Replacement (3 of 3)*; [illegible] *Figure 7-22, Cassette Door Replacement, Bottom View*, [illegible] :

1. [illegible] *Section 7.2.5*.

2. *Section 7.2.9.2*.
3. O . D *(see Figure 7-18)*.
4. O . P 15- . P .
5. C .
6. P .
7. G *(see Figure 7-19 Figure 7-22)*. O . .
8. F . N . G .
9. I .
10. I .
11. (LM D P) D P /MC .
12. C AC ( ) .

P *Section 5.2*.

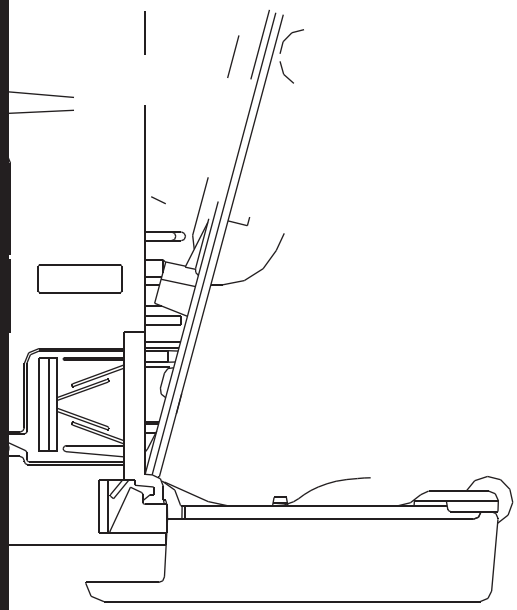

-18. Mechanism Shield Replacement

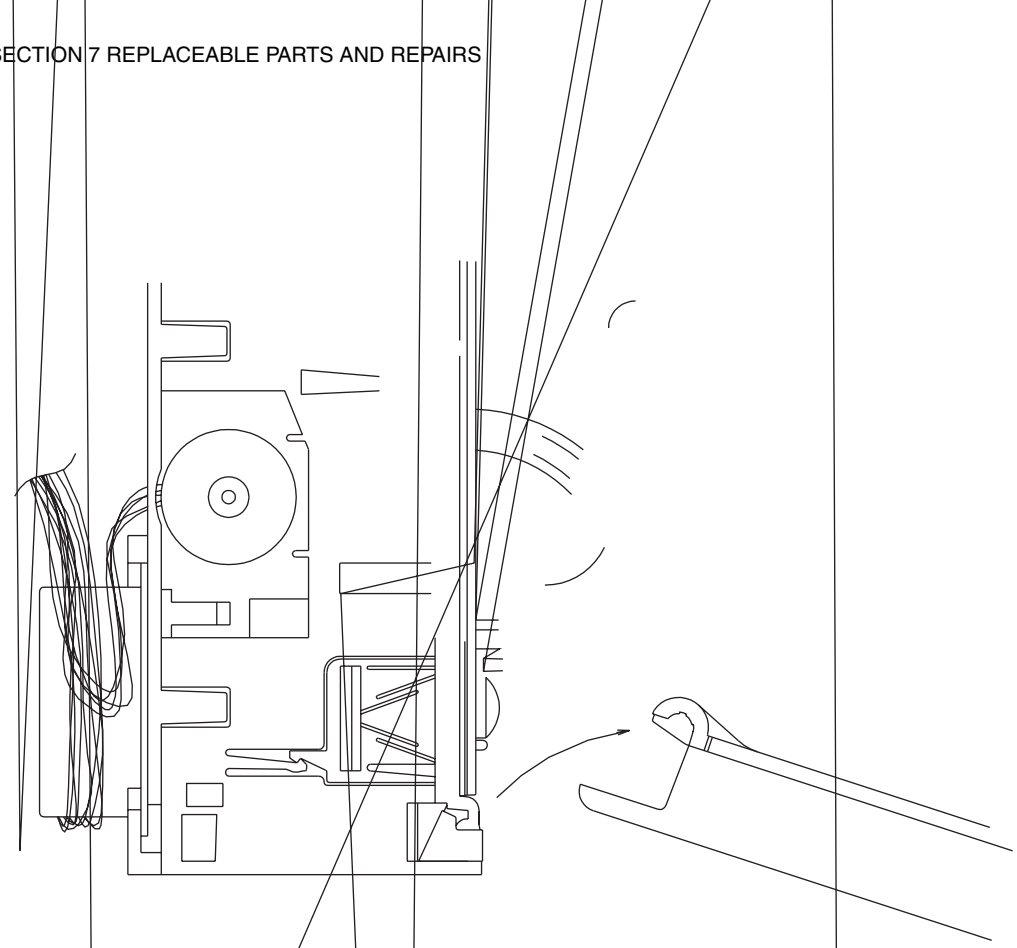

Figure 7-21. Cassette Door Replacement (3 of 3)

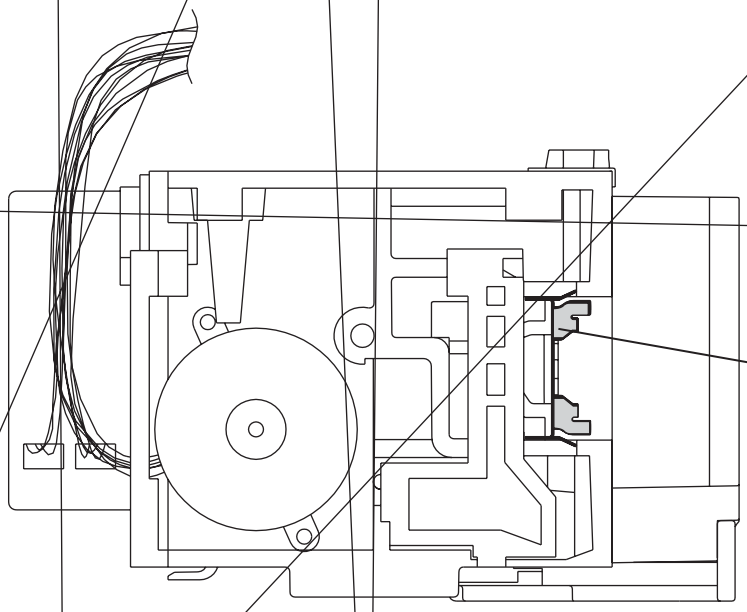

Figure 7-22. Cassette Door Replacement, Bottom View

7.2.9.4

OPENER HANDLE ASSEMBLY REPLACEMENT

CAUTION: Use proper ESD grounding techniques when handling components. Wear an antistatic wrist strap and use an ESD-protected workstation. Store the PWA in an antistatic bag before placing it on any surface.

Figure 7-23, Opener Handle Assembly Replacement (1 of 3) *Figure 7-25, Opener Handle Assembly Replacement (3 of 3)*,

1. *Section 7.2.5*.
2. *Section 7.2.9.2*.
3. . .
4. .
5. .

   No

6. *(see Figure 7-25)*.
7. .
8. .

   No (LM D P) D P /MC .

9. AC ( ) .

Section 5.2.

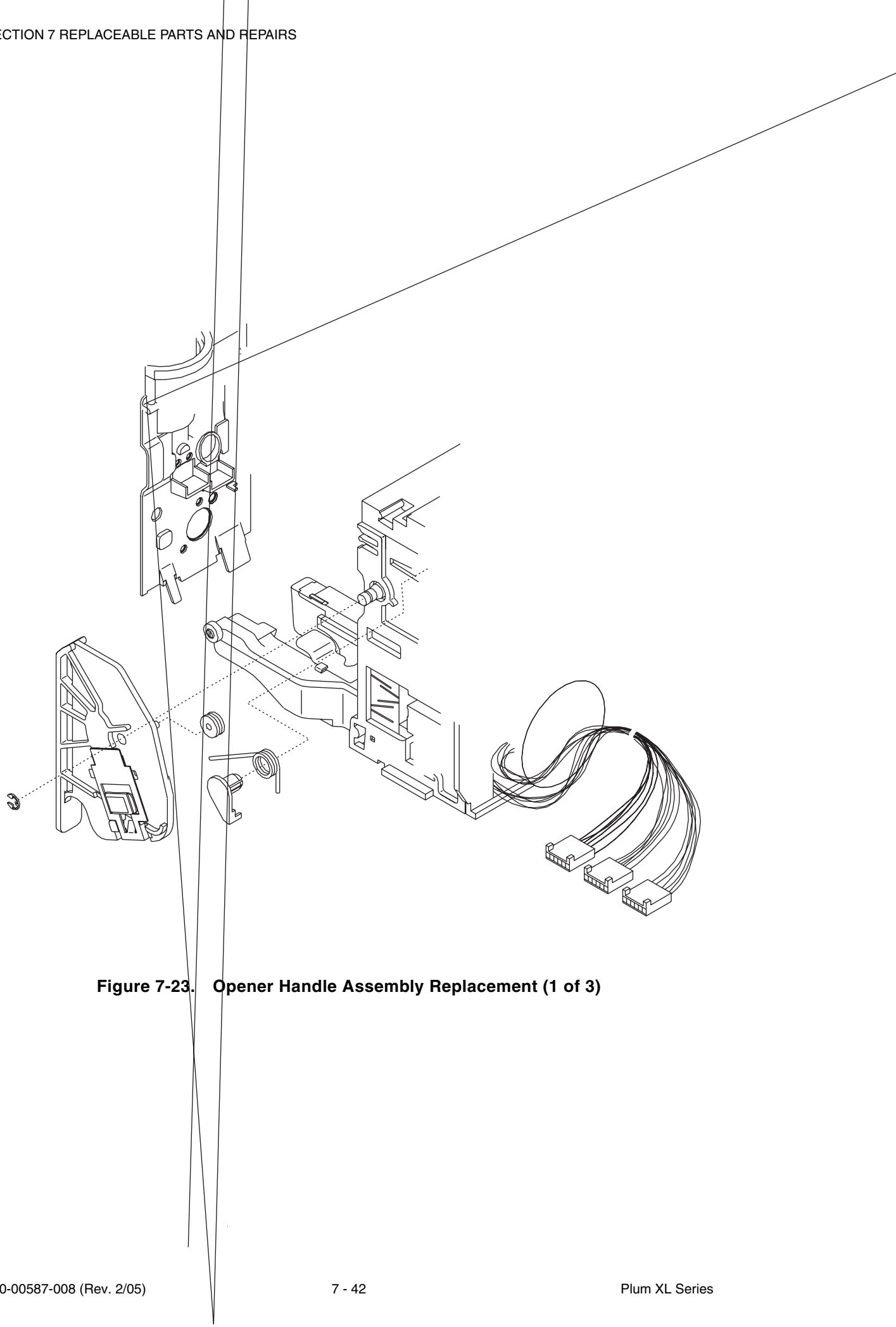

Figure 7-23. Opener Handle Assembly Replacement (1 of 3)

Section 8

SPECIFICATIONS

115 AC P L 220 AC L C L .

8.1
PLUM XL AND XLM

P L .

PHYSICAL

Dimensions: A 8.25H 7.5 8.75D ( )

Weight: A 7.75 ( )

Casing: H -

ELECTRICAL

Power Requirements: 100-130 AC, 50 60 H , 35

Power Cord: H AC ( ) . 10 ,

Fuses: 0.5 A, 250 ,

Battery: 8 , . A ,

Battery Operation (XL/XLM): A 125 L/ , 1000 L ,

Battery Operation (XLM with DataPort): D P 125 L/ , 1000 L , .
D P 125 L/ , 625 L ,

Note: D D P

Recharge: AC ( ) . I 125 L/ 16 . I OFF/CHA GE,

ENVIRONMENT

Operating Temperature: 0° • 40° C, 10% • 90% _ , ,

TRANSPORT AND STORAGE ENVIRONMENT

Temperature: -20° • 60° C

Relative Humidity: 10% • 90%

Atmospheric Pressure: 0-10,000 (0-3,000) • , _ ,

DELIVERY RATE RANGE

Primary, Secondary Mode

XL: 1 • 999 L/ (1 L)

XLM: 0.1 • 99.9 L/ (0.1 L)
100 • 999 L/ (1 L)

KVO

XL: 1 L/

XLM: • • 1.0 L/ • _ _ ,

DOSE LIMIT RANGE

XL: 1 • 9999 L/ (1 L)

XLM: 0.1 • 99.9 L (0.1 L)
100 • 9999 L (1 L)

OCCLUSION RANGE

Distal: 10 (+5, -2)

Battery: O 8 . A

Battery Operating Time (XL/XLM): 1000 L 30 125 L/ . I

Note: G . A B

Battery Operating Time (XLM with DataPort): D P 1000 L D P 625 L 30 125 L/ . I

Note: D D P

Note: G . A B

Battery Recharge: . I 125 L/ 16 OFF/CHA GE

Battery Charge Retention: A 20 35° C (95° F)

ENVIRONMENT

Operating Temperature: 0° 40° C (50° 104° F) 10 90

Shipping and Storage: -20° 60° C (-4° 140° F) 10 90

DELIVERY RATE RANGE

Flow Rate Range

XL: 1 • 999 L/ (1 L)

XLM: 0.1 • 99.9 L/ (0.1 L)
100 • 999 L/ (1 L)

KVO

XL: 1 L/

XLM: • • 1.0 L/ • _ _

DOSE LIMIT RANGE

XL: 1 • 9999 L/ (1 L)

XLM: 0.1 • 99.9 L (0.1 L)
100 • 9999 L (1 L)

ELECTRONIC MEMORY: _ , • _ • , _
_ _

ELECTRICAL SAFETY: D IEC 60601-1-2 _ _

A • ! C• _ • _ • ,

_ • • • • _ • _ • • , •

MAXIMUM OCCLUSION PRESSURE: 99 P

OCCLUSION ALARM PRESSURE LIMIT: 69 14 P

MAXIMUM OVERINFUSION: _ • • • • _ • • •
25

MAXIMUM STORED BOLUS VOLUME:

Delivery Rate: 1 L/ = 0.6 L
100 L/ = 0.6 L
999 L/ = 0.6 L

MAXIMUM TIME FROM OCCLUSION TO ALARM: D _ :
1 L/ = 40
100 L/ = 30 •
999 L/ = 2 •

DELIVERY RATE ACCURACY: ±5 _ _

Section 9

DRAWINGS

Figure 9-1 [illegible] *Figure 9-28* [illegible] (IPB), [illegible] P A [illegible]. *Table 9-1, Drawings*, [illegible]. *Table 9-2, IPB for the Infusion System*, [illegible] *Figure 9-1*.

Note: D[illegible] *Section 9*[illegible].

Table 9-1. Drawings

Figure No.	Title	Part Number
9-1	Illustrated Parts Breakdown (2 sheets)	Not Applicable
9-2	Front Enclosure, Rear Enclosure, and Main Chassis Assemblies	
9-3	Front Enclosure Assembly	
9-4	Rear Enclosure Assembly (XL - Domestic)	
9-5	Rear Enclosure Assembly (XL - International)	
9-6	Rear Enclosure Assembly (XLM - Domestic)	
9-7	Rear Enclosure Assembly (XLM - International)	
9-8	Rear Enclosure Assembly (XLM with DataPort - Domestic)	
9-9	Rear Enclosure Assembly (XLM with DataPort - International)	
9-10	Rear Enclosure Assembly (LifeCare XLM with DataPort)	
9-11	Main Chassis Assembly	
9-12	Battery Replacement	
9-13	Mechanical Assembly (2 sheets)	
9-14	Plum XL Block Diagram	
9-15	MCU PWA Schematic (XL) (2 sheets)	249-00530
9-16	MCU PWA Schematic (XLM) (2 sheets)	249-05907
9-17	MCU PWA Schematic (XLM with DataPort) (18 sheets)	249-05701

Table 9-1. Drawings		
Figure No.	**Title**	**Part Number**
9-18	Display PWA Schematic (XL)	249-00531
9-19	Display PWA Schematic (XLM) (7 sheets)	249-05901
9-20	Bubble Sensor PWA Schematic (3 sheets)	249-00536
9-21	Sensor PWA Schematic	249-00538
9-22	Pin Detector Flex Circuit Schematic	249-00539
9-23	Power Supply PWA Schematic (XL - Domestic) (2 sheets)	249-00562
9-24	Power Supply PWA Schematic (XL - International) (2 sheets)	249-00573
9-25	Power Supply PWA Schematic (XLM - Domestic) (2 sheets)	249-05920
9-26	Power Supply PWA Schematic (XLM - International) (4 sheets)	249-05916
9-27	Power Supply PWA Schematic (XLM with DataPort) (4 sheets)	249-05916
9-28	Buzzer PWA Schematic	249-05903

Table 9-2. IPB for the Infusion System		
Index No.	**Nomenclature**	**Replacement Procedure**
1	Enclosure, Front	*Secti 7.2.6*
2	Chassis, Main	*Secti 7.2.6*
3	Enclosure, Rear	*Secti 7.2.6*
4	PWA, Power Supply	*Secti 7.2.8.2*
5	Shield, EMI	*Secti 7.2.8.7*
6	PWA, MCU	*Secti 7.2.9.1*
7	PWA, Display	*Secti 7.2.7.1*
8	Assembly, Mechanism	*Secti 7.2.9.2*
9	Assembly, Opener Handle	*Secti 7.2.9.4*
10	PWA, Buzzer	*Secti 7.2.8.12*
11	Shield, Mechanism	*Secti 7.2.9.3*
12	Label, Front Panel	*Secti 7.2.7.4*
13	Cordset, AC Power, Hospital Grade, 220 V	*Secti 7.2.8.5*
14	Cordset, AC Power, Hospital Grade, 115 V	*Secti 7.2.8.4*

Table 9-2. IPB for the Infusion System		
Index No.	**Nomenclature**	**Replacement Procedure**
15	Assembly, Battery, with Wire Harness	*Section 7.2.4*
16	Door, Battery	*Section 7.2.4*
17	Pad, Battery Door	*Section 7.2.4*
18	Insulator, Adhesive-Backed	*Section 7.2.8.10*
19	Plate, Backing, Pole Clamp	*Section 7.2.8.10*
20	Extrusion, Pole Clamp	*Section 7.2.8.10*
21	Tip, Shaft, Pole Clamp	*Section 7.2.8.11*
22	Assembly, Shaft/Knob, Pole Clamp	*Section 7.2.8.11*
23	Assembly, Cable, MCU/Display	*Section 7.2.7.1*
24	Assembly, Cable, Sensor/MCU	*Section 7.2.9.1*
25	Assembly, Ground Wire	As Applicable
26	Assembly, Cable, DataPort/Ground	*Section 7.2.8.8*
27	Assembly, Cable, DataPort/MCU	*Section 7.2.8.8*
28	Assembly, Cable, MCU/Buzzer	*Section 7.2.8.12*
29	Strap, Velcro, 1.75 in. x 10 in., Black	*Section 7.2.8.3*
30	Gasket, Front/Rear Enclosure	*Section 7.2.6*
31	Gasket, Front/Rear Enclosure	*Section 7.2.6*
32	Knob, Control	*Section 7.2.7.3*
33	Washer, Knob	*Section 7.2.7.3*
34	Gasket, Knob	*Section 7.2.7.3*
35	Ring, Detent	*Section 7.2.7.3*
36	Detent, Knob	*Section 7.2.7.3*
37	Shim, Knob	*Section 7.2.7.3*
38	Assembly, Cassette Door	*Section 7.2.9.3*
39	Connector, AC Receptacle, 220 V	*Section 7.2.8.6*
40	Connector, AC Receptacle, International	*Section 7.2.8.7*
41	Strain Relief, Nylon, Black	*Section 7.2.8.4*
42	Key, Front Panel, Switch-Activated	*Section 7.2.7.2*
43	Fuse, 0.5 A, 250 V, Slo-Blo, 5 x 20 mm	*Section 7.2.8.1*
44	Cover, Fuse, 5 x 20 mm	*Section 7.2.8.1*
45	Ring, Retaining, .188 x .025 Thk., SS	*Section 7.2.9.4*

Table 9-2. IPB for the Infusion System		
Index No.	**Nomenclature**	**Replacement Procedure**
46	Roller, Handle	*Secti 7.2.9.4*
47	Holder, Handle Spring	*Secti 7.2.9.4*
48	Spring, Torsion	*Secti 7.2.9.4*
49	Retainer, Door Pivot	*Secti 7.2.9.3*
50	Retainer, Snap, Knob	*Secti 7.2.7.3*
51	Magnet	*Secti 7.2.7.3*
52	Spring, Door Clip, Left-Side	*Secti 7.2.9.3*
53	Foot, Rubber	*Secti 7.2.3*
54	Gasket, Lockout	*Secti 7.2.8.12*
55	Gasket, Audible	*Secti 7.2.8.12*
56	Housing, Seal, AC Receptacle	*Secti 7.2.8.7*
57	Gasket, AC Receptacle	*Secti 7.2.8.7*
58	Bracket, AC Receptacle	*Secti 7.2.8.7*
59	Gasket, DataPort	*Secti 7.2.8.9*
60	Bracket, DataPort	*Secti 7.2.8.9*
61	Post, Equipotential	*Secti 7.2.8.6*, *Secti 7.2.8.7*
62	Bumper, XL MCU	*Secti 7.2.7.1*
63	Screw, 6-32 x 1/2, Hex Head, Slotted, with Washer	As Applicable
64	Screw, 10-32 x 1/2, Hex Head, Slotted, with Washer	As Applicable
65	Screw, 6-32 x 5/16, Hex Head, Slotted, with Washer	As Applicable
66	Screw, 4-24 x 3/8, B/Point, Phillips	As Applicable
67	Screw, 6-32 x 3/4, Hex Head, Slotted, with Washer	As Applicable
68	Screw, 6-32 x 3/8, Slotted, Type T	As Applicable
69	Screw, 6-32 x 1, Hex Head, Slotted, with Washer	As Applicable
70	Kit, Screw, Lock, 4-40 x .312	As Applicable
71	Kit, Screw, Lock, 4-40	As Applicable
72	Nut, KEP, 6-32	As Applicable
73	Nut, Hex, Metric, DIN 934, 6mm	As Applicable
74	Nut, Hex, Metric, DIN 439, 6mm	As Applicable
75	Nut, Hex, Self-Locking, 4-40	As Applicable

Table 9-2. IPB for the Infusion System		
Index No.	**Nomenclature**	**Replacement Procedure**
76	Washer, Lock, 1/4, Internal Tooth, .025 Thk.	As Applicable
77	Washer, Flat, .147 x .032 Thk., Brass	As Applicable
78	Washer, Flat, .253 x .050 Thk.	As Applicable
79	Washer, Flat, .566 x .255 x .030 Thk., SS	As Applicable
80	Cable Tie	*Section 7.2.9.1*, *Section 7.2.9.2*
81	Mount, Cable Tie, Adhesive Back	*Section 7.2.9.2*
82	Screw, 4-40 x 1/4, Hex Head, Nylon	*Section 7.2.8.9*
83	Washer, Shoulder, #4, Nylon	*Section 7.2.8.9*
84	Cap, DataPort	*Section 7.2.8.9*

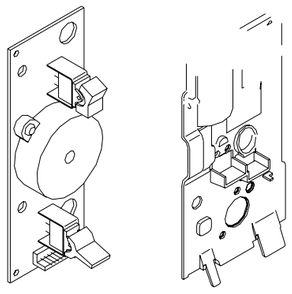

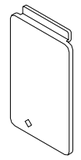

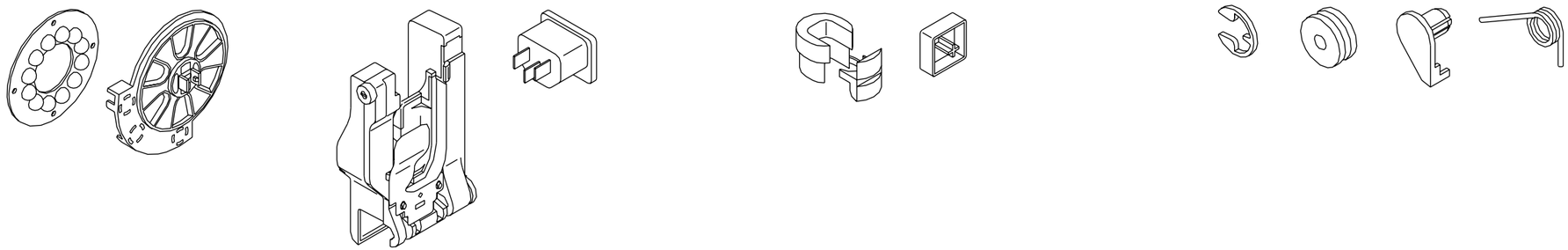

04K04001

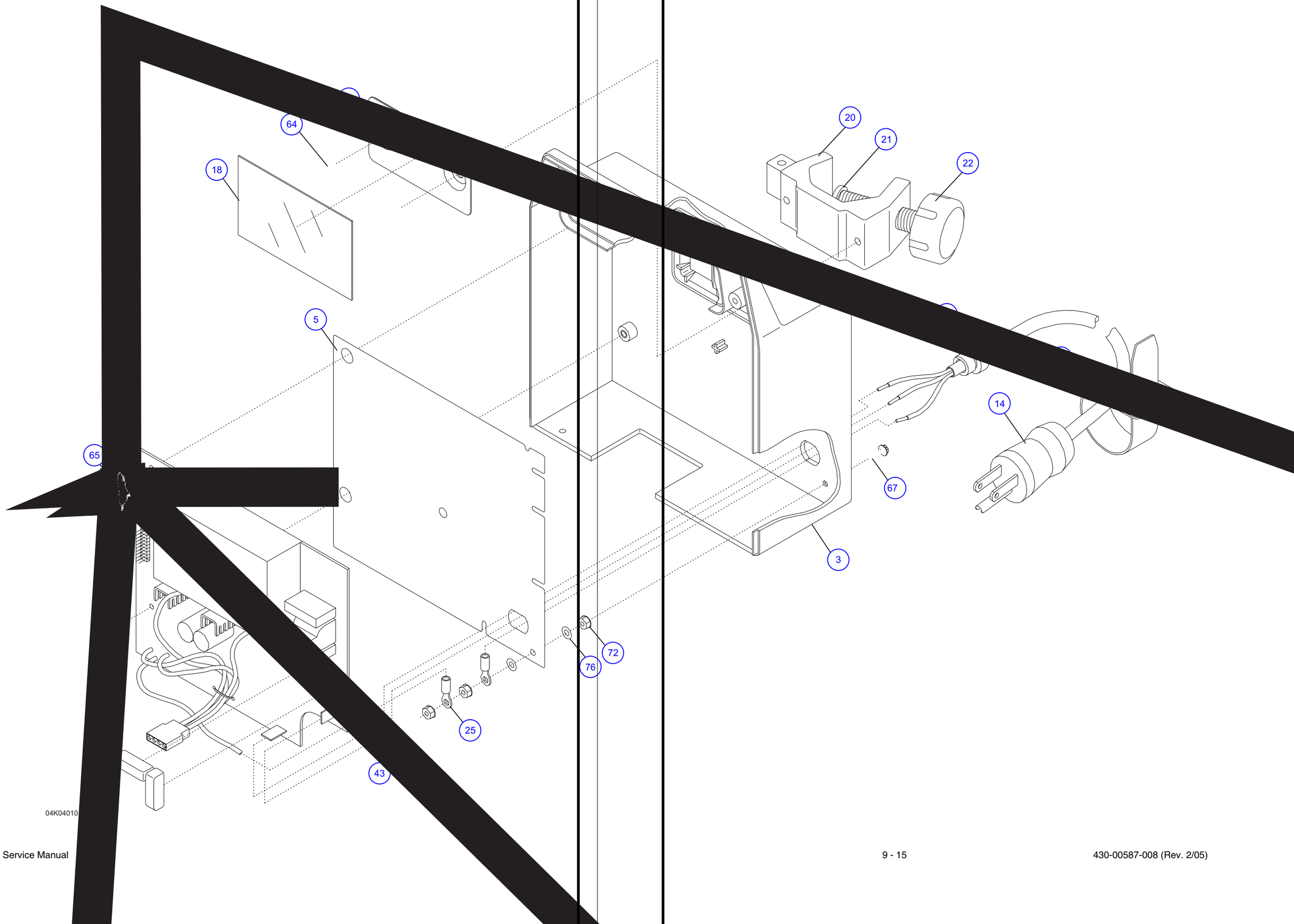
64
18
5
65
20
21
22
14
67
3
72
76
25
43
04K04010

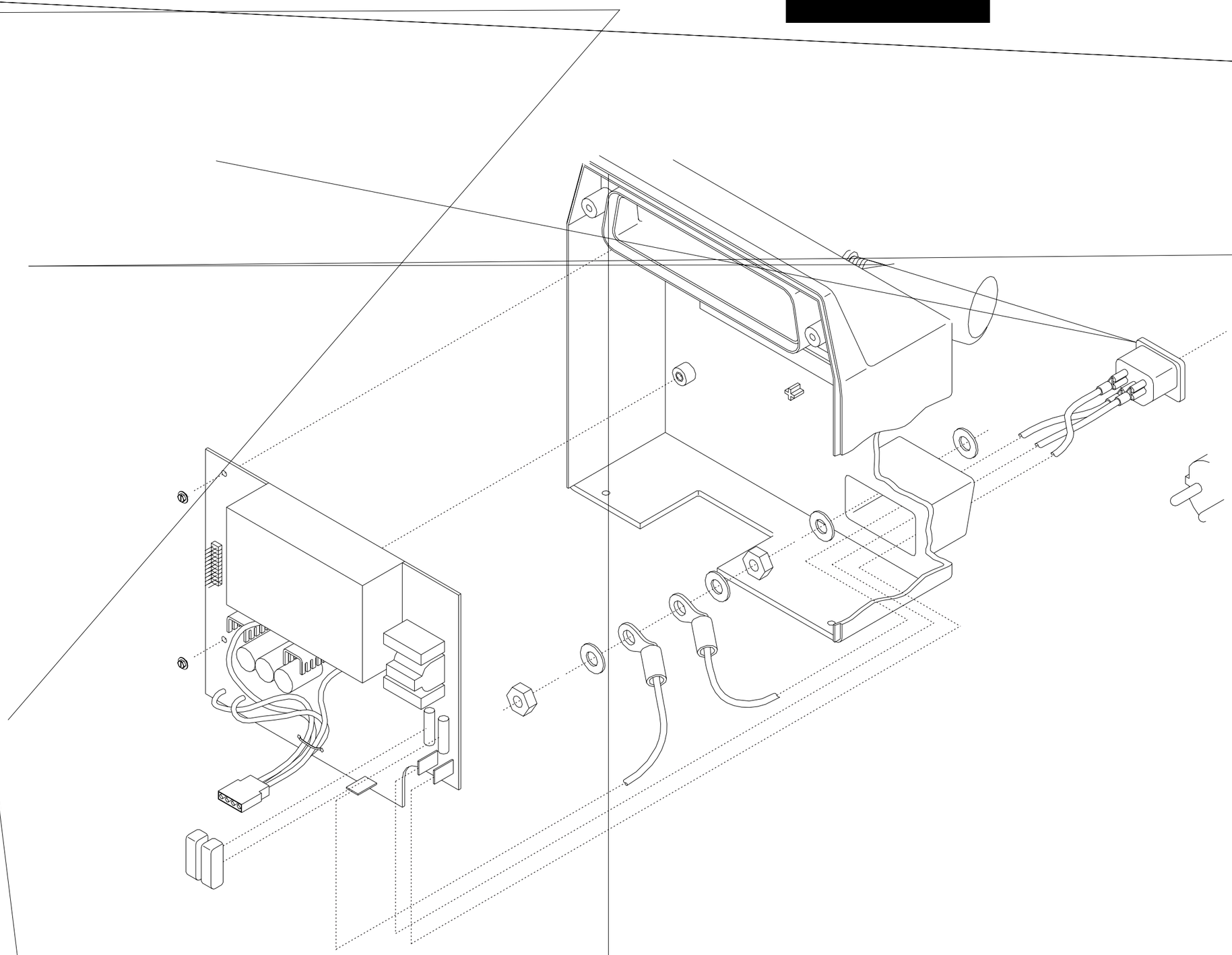

04K04011

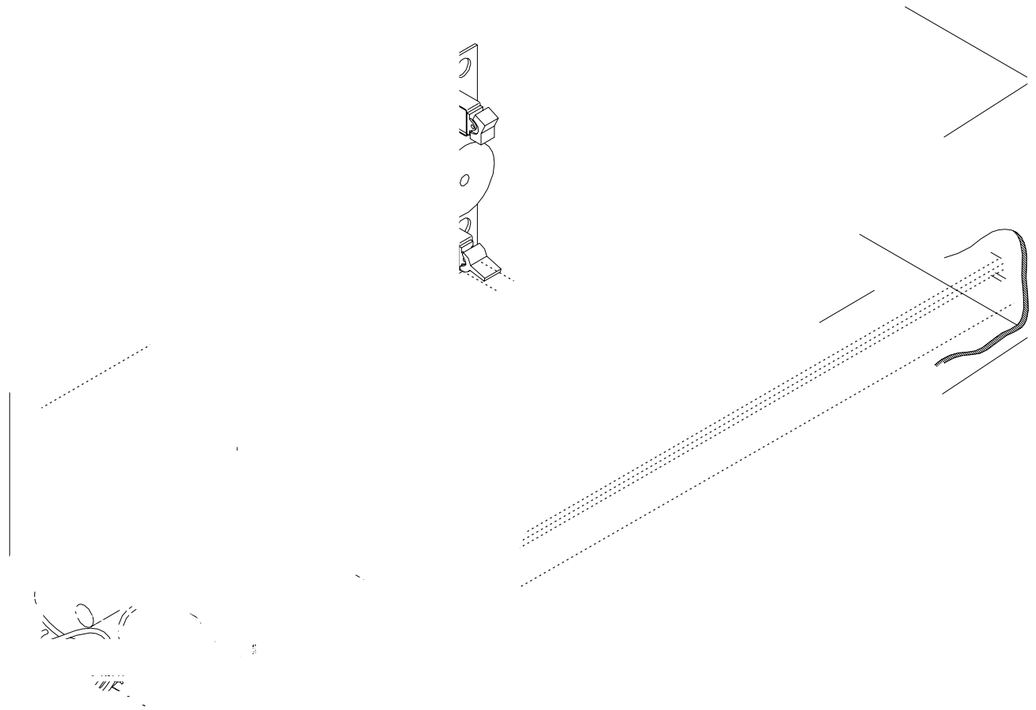

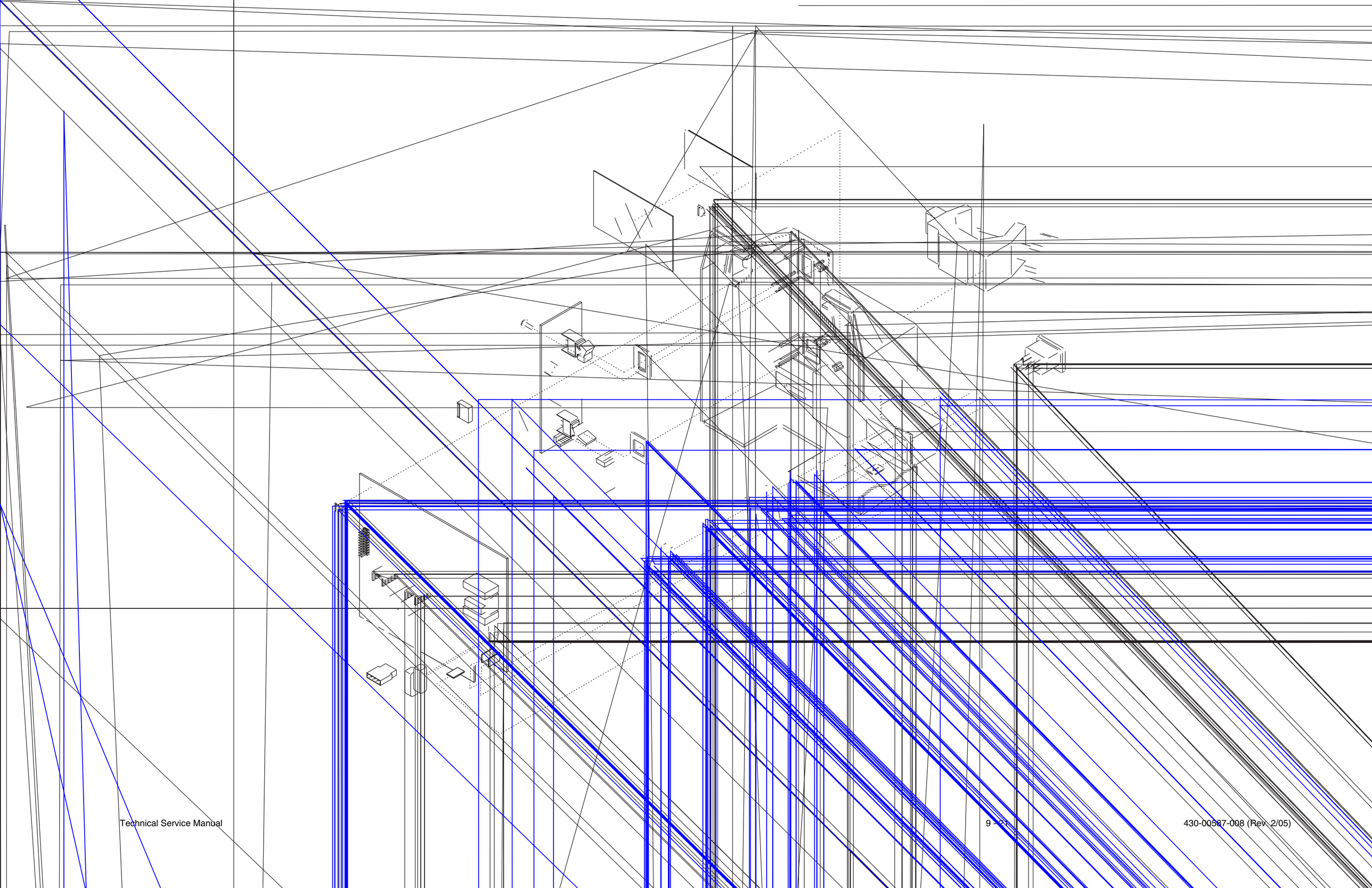

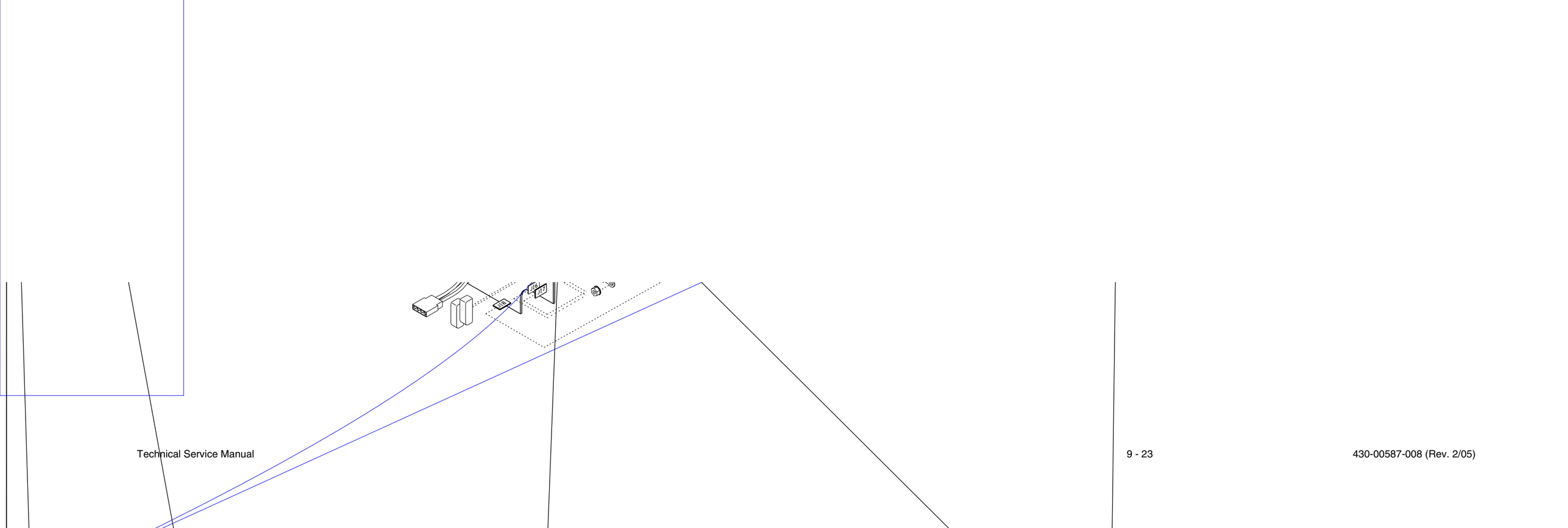

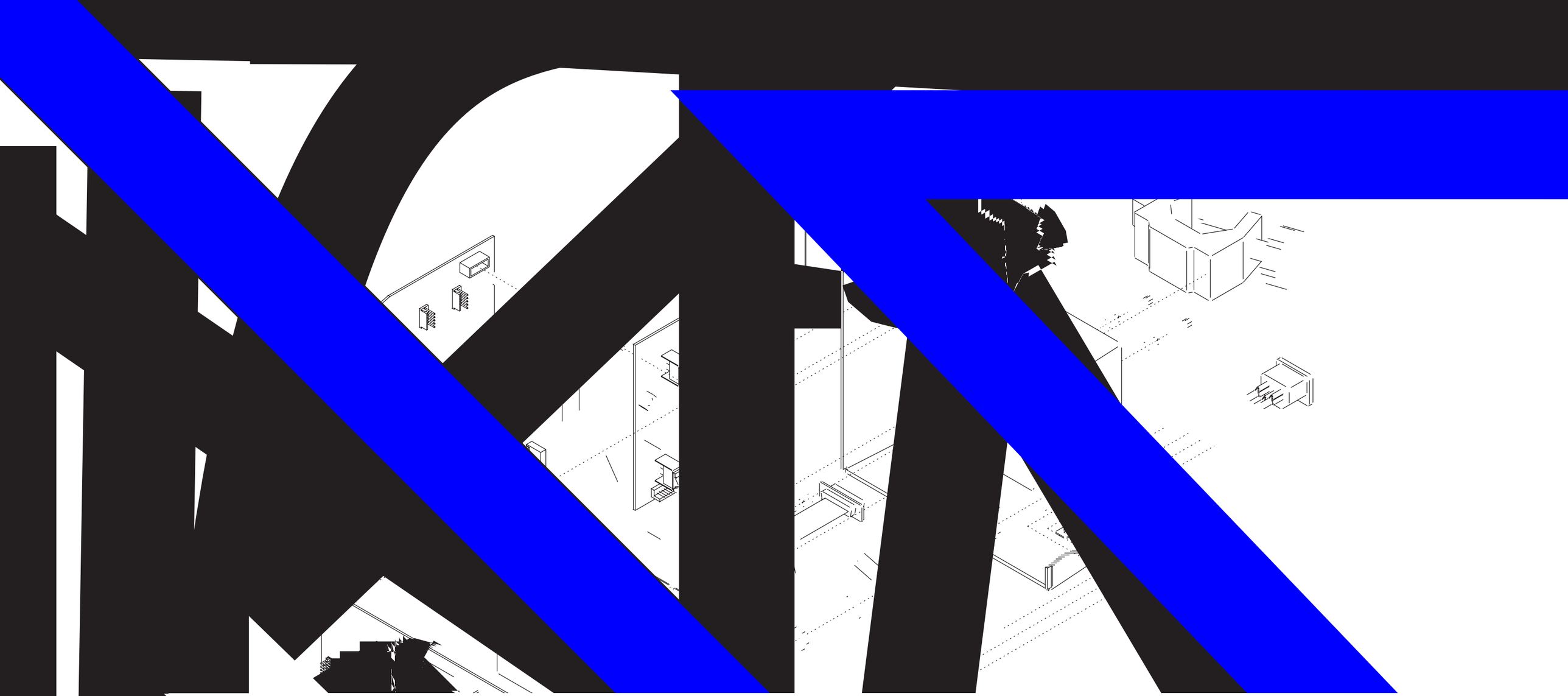

04K01033

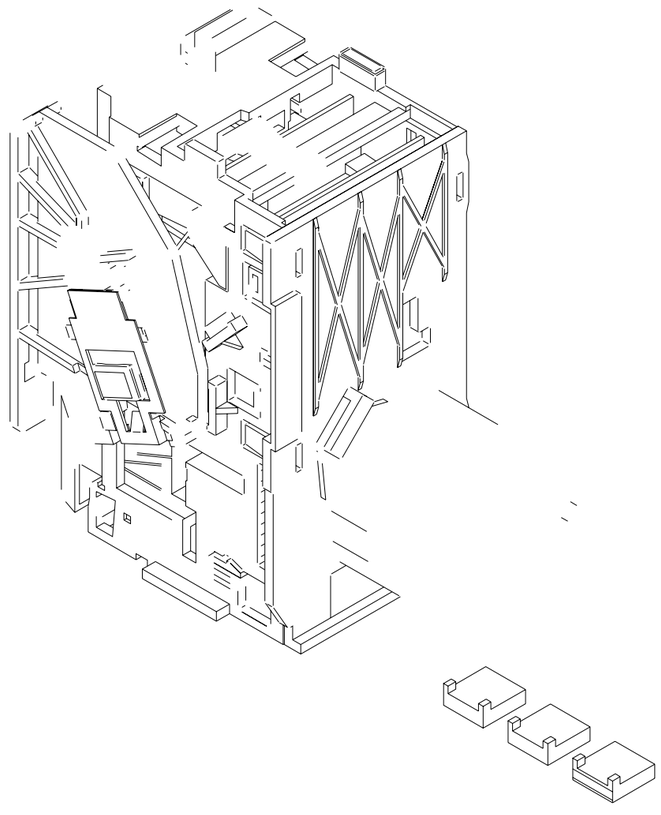

04K04012

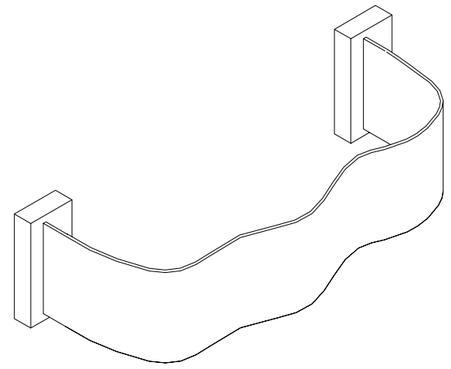

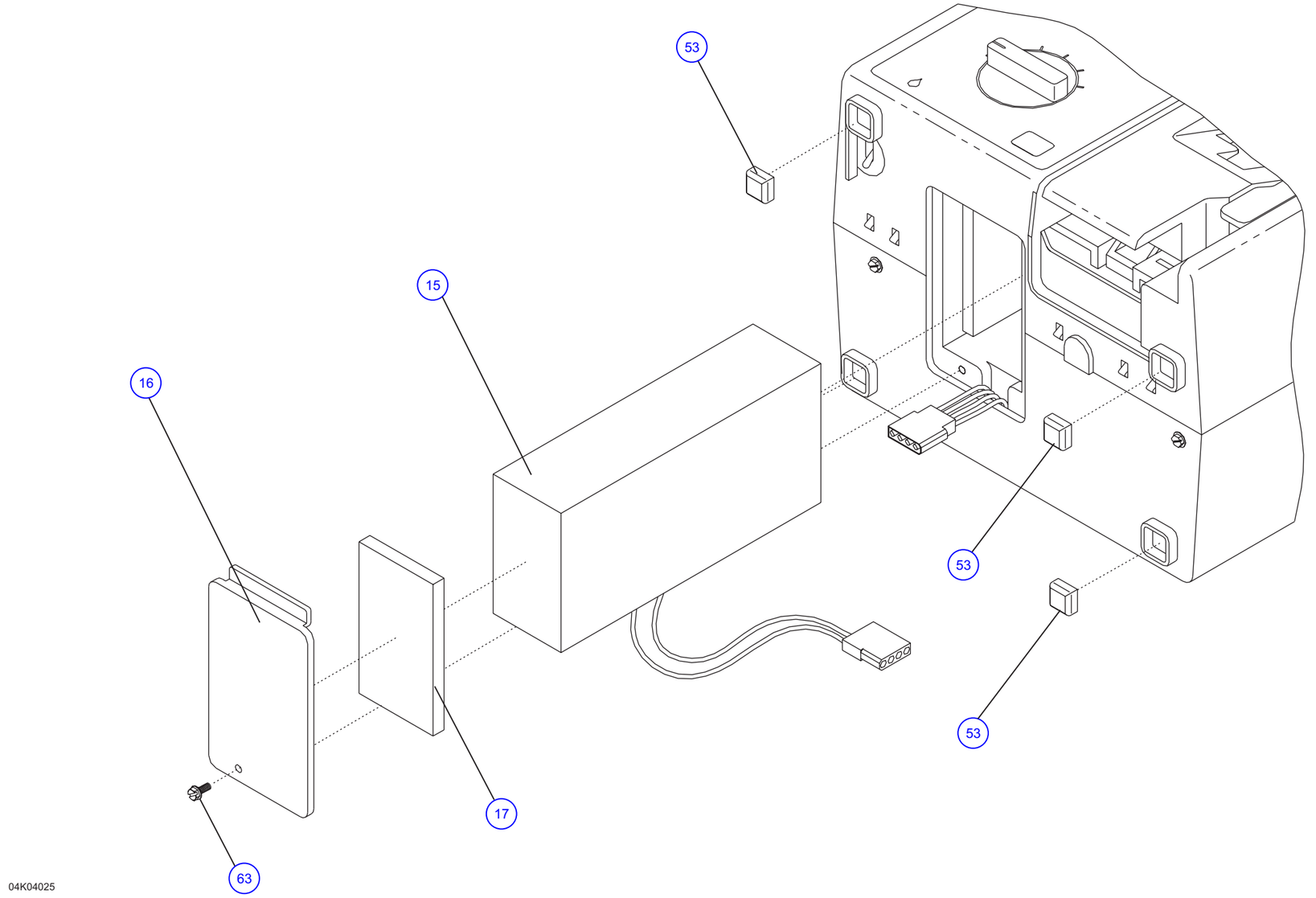

HOSPIRA, INC.	
Figure 9-12. Battery Replacement	
DRAWING NO. NOT APPLICABLE	Rev. N/A
	Sheet 1 of 1

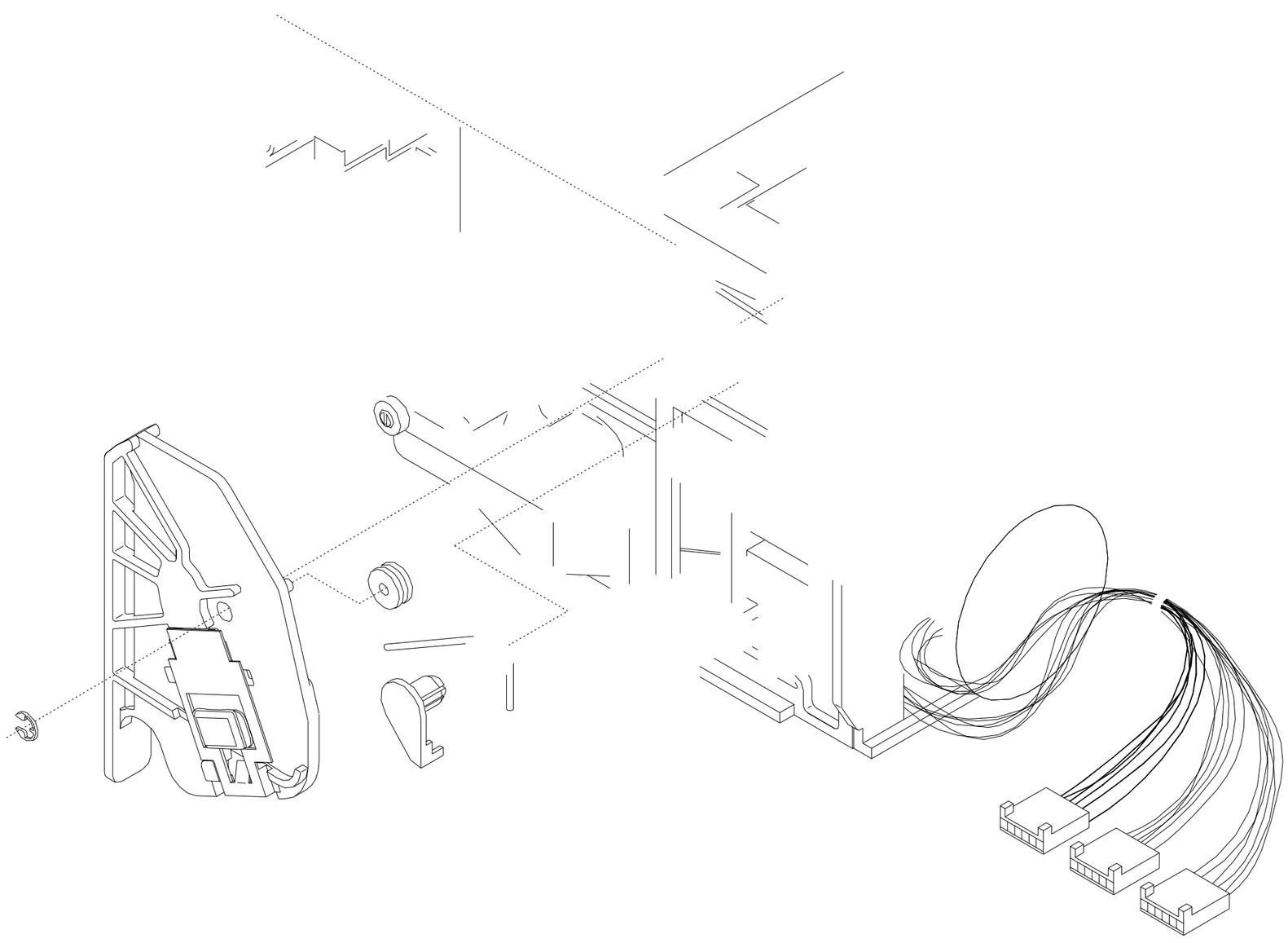

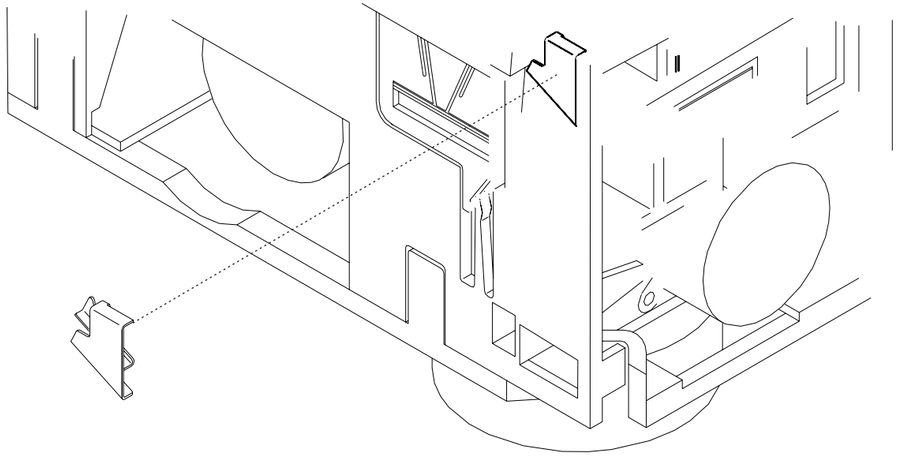

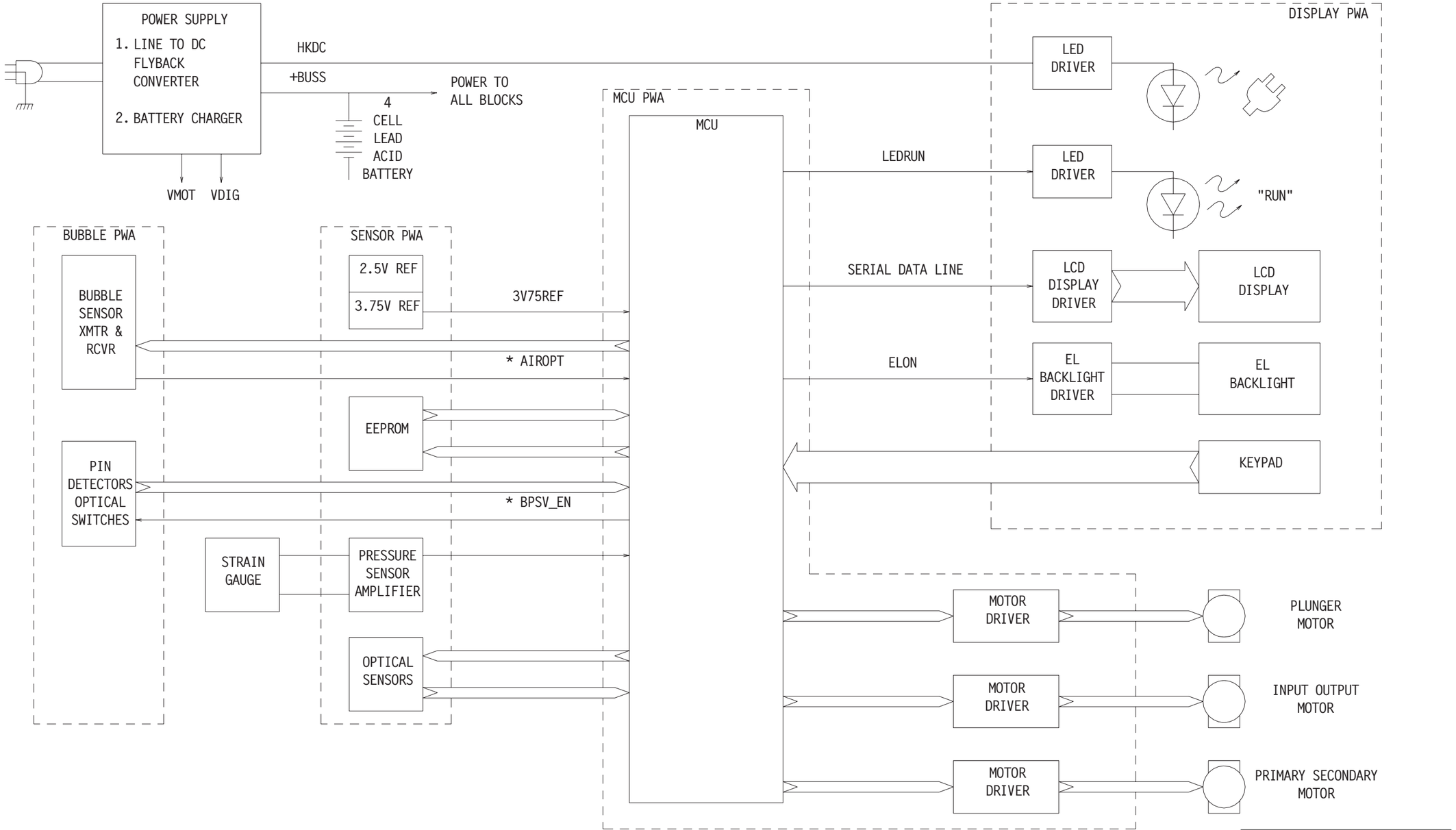

HOSPIRA, INC.	
Figure 9-14. Plum XL Block Diagram	
DRAWING NO. NOT APPLICABLE	Rev. N/A
	Sheet 1 of 1

94E06009

SHEET 1

SHEET 1

PLUNGMOT1

PSMOT1

IOMOT4

J9 -1

DECOUPLER CAPACITORS / IC POWER CONNECTIONS

U1-8 U2-14 U3-14 U4-14 U5-14 U6-64 U7-14 U8-14 U9-14 U11-8

0.1

U1-4 U2-7 U3-7 U4-7 U5-7 U6-32 U7-7 U8-7 U9-7 U11-4

HOSPIRA, INC.	
Figure 9-15. MCU PWA Schematic (XL)	
DRAWING NO. 249-00530-009	Rev. F
	Sheet 2 of 2

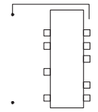

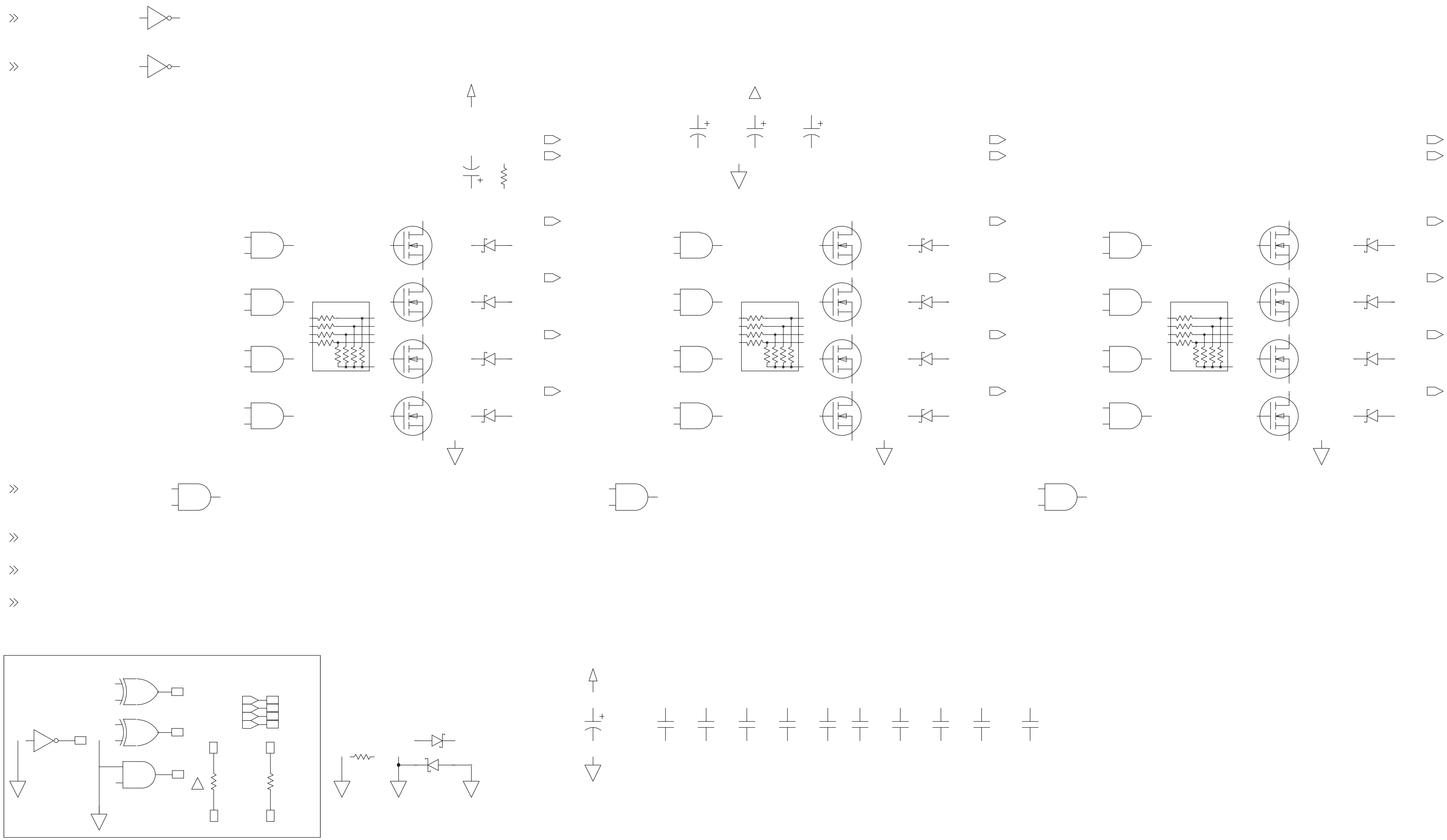

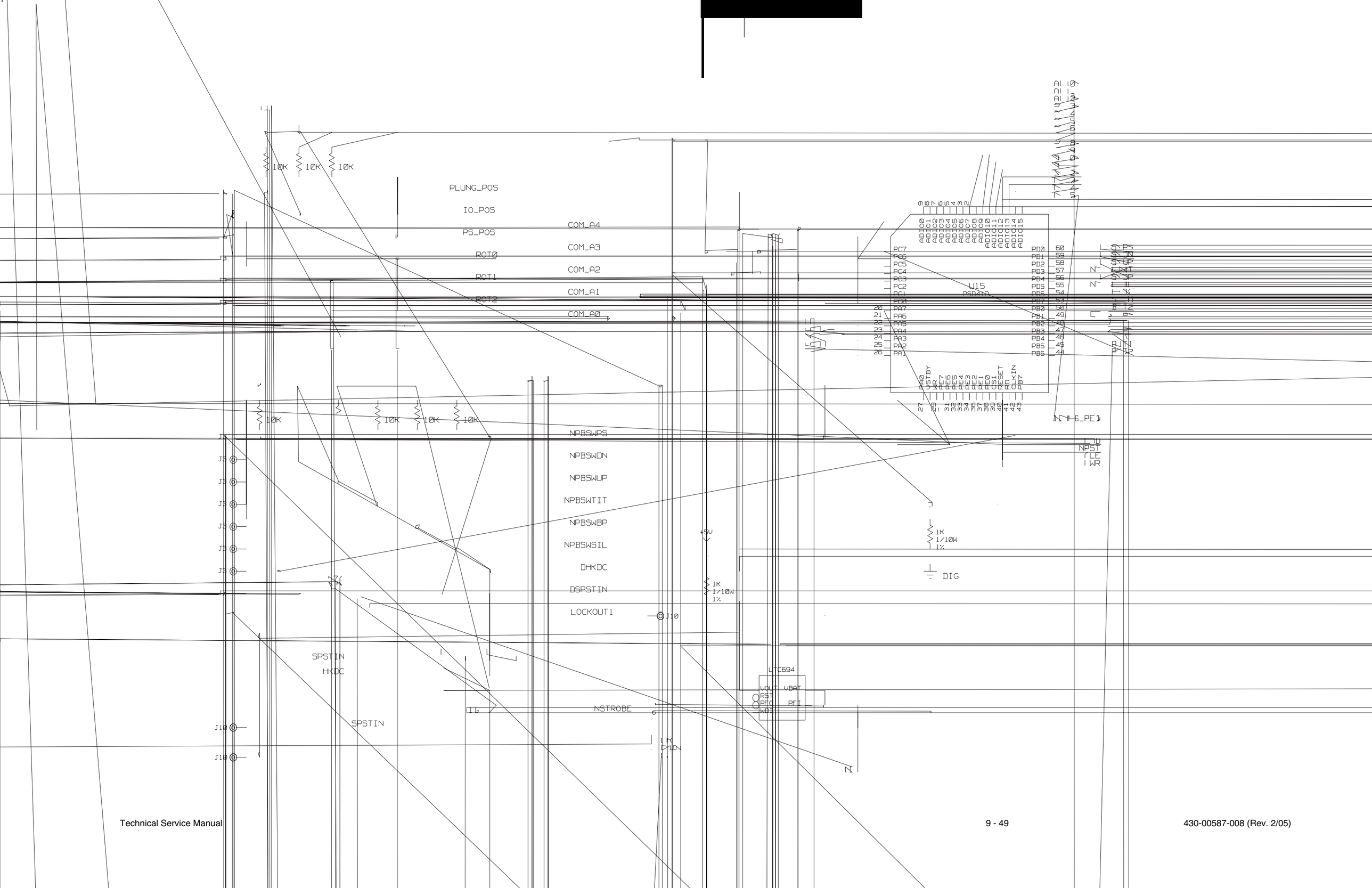
10K
10K
10K
PLUNG_POS
IO_POS
PS_POS
ROT0
ROT1
ROT2
COM_A4
COM_A3
COM_A2
COM_A1
COM_A0
U15
PSD4135
PC7
PC6
PC5
PC4
PC3
PC2
PC1
PC0
PA7
PA6
PA5
PA4
PA3
PA2
PA1
PD0
PD1
PD2
PD3
PD4
PD5
PD6
PD7
PB0
PB1
PB2
PB3
PB4
PB5
PB6
ADIO0
ADIO1
ADIO2
ADIO3
ADIO4
ADIO5
ADIO6
ADIO7
ADIO8
ADIO9
ADIO10
ADIO11
ADIO12
ADIO13
ADIO14
ADIO15
PA0
VSTBY
WR
PE7
PE6
PE5
PE4
PE3
PE2
PE1
PE0
CSI
RESET
RD
CLKIN
PB7
NPBSWPS
NPBSWDN
NPBSWUP
NPBSWTIT
NPBSWBP
NPBSWSIL
DHKDC
DSPSTIN
LOCKOUT1
J10
+5V
1K
1/10W
1%
DIG
SPSTIN
HKDC
SPSTIN
LTC694
VOUT
RST
PFO
WDI
VBAT
PFI
NSTROBE
NPST
PLE
WR

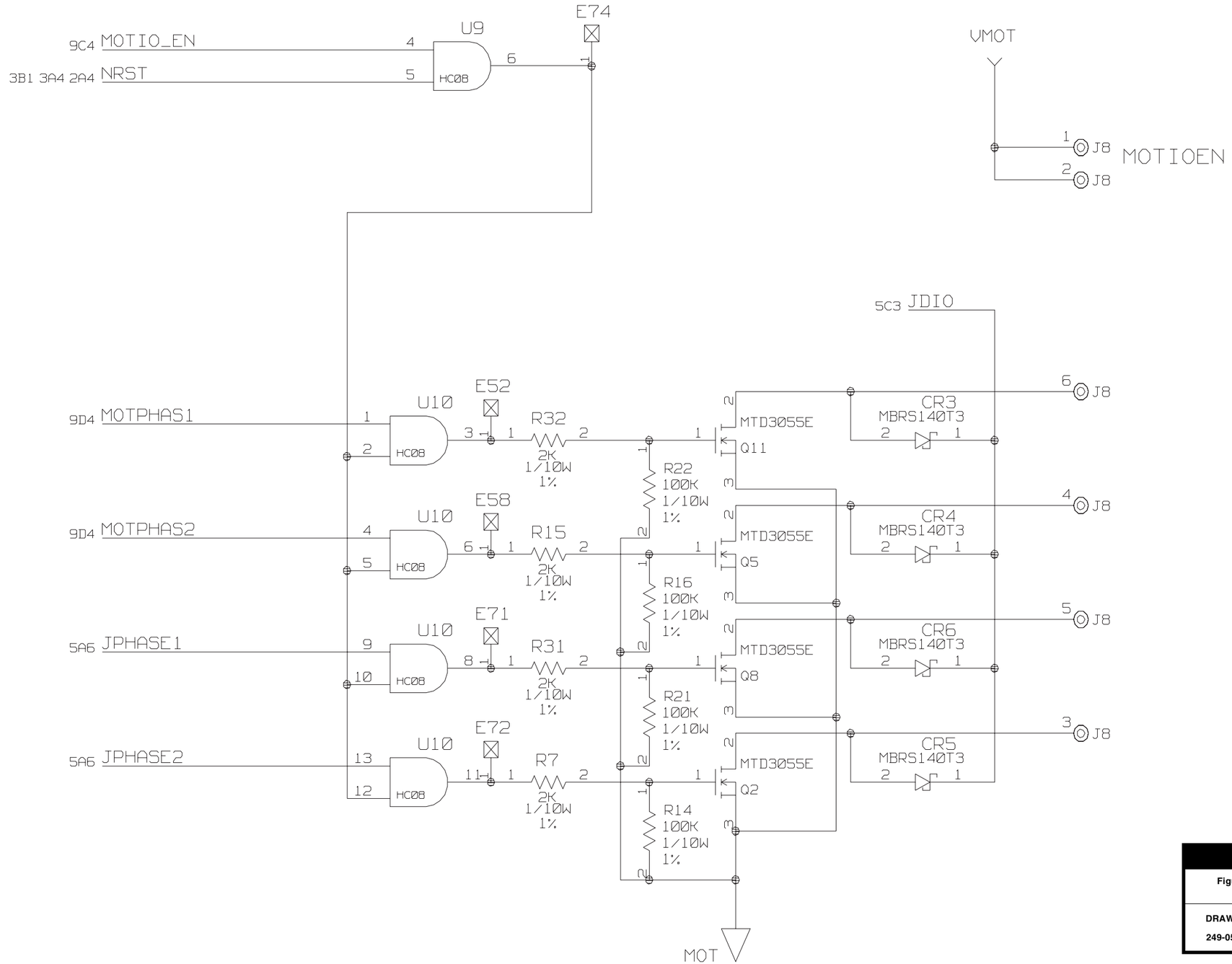

HOSPIRA, INC.	
Figure 9-17. MCU PWA Schematic (XLM with DataPort)	
DRAWING NO. 249-05701-001	Rev. C
	Sheet 5 of 18

[redacted]

[redacted]

VMOT

J9

J9

J9

J9

J9

HC08

HC08

HC08

HC08

2K
1/10W
1%

2K
1/10W
1%

2K
1/10W
1%

2K
1/10W
1%

100K
1/10W
1%

100K
1/10W
1%

100K
1/10W
1%

100K
1/10W
1%

MTD3055E

MTD3055E

MTD3055E

MB

MOT

[redacted]

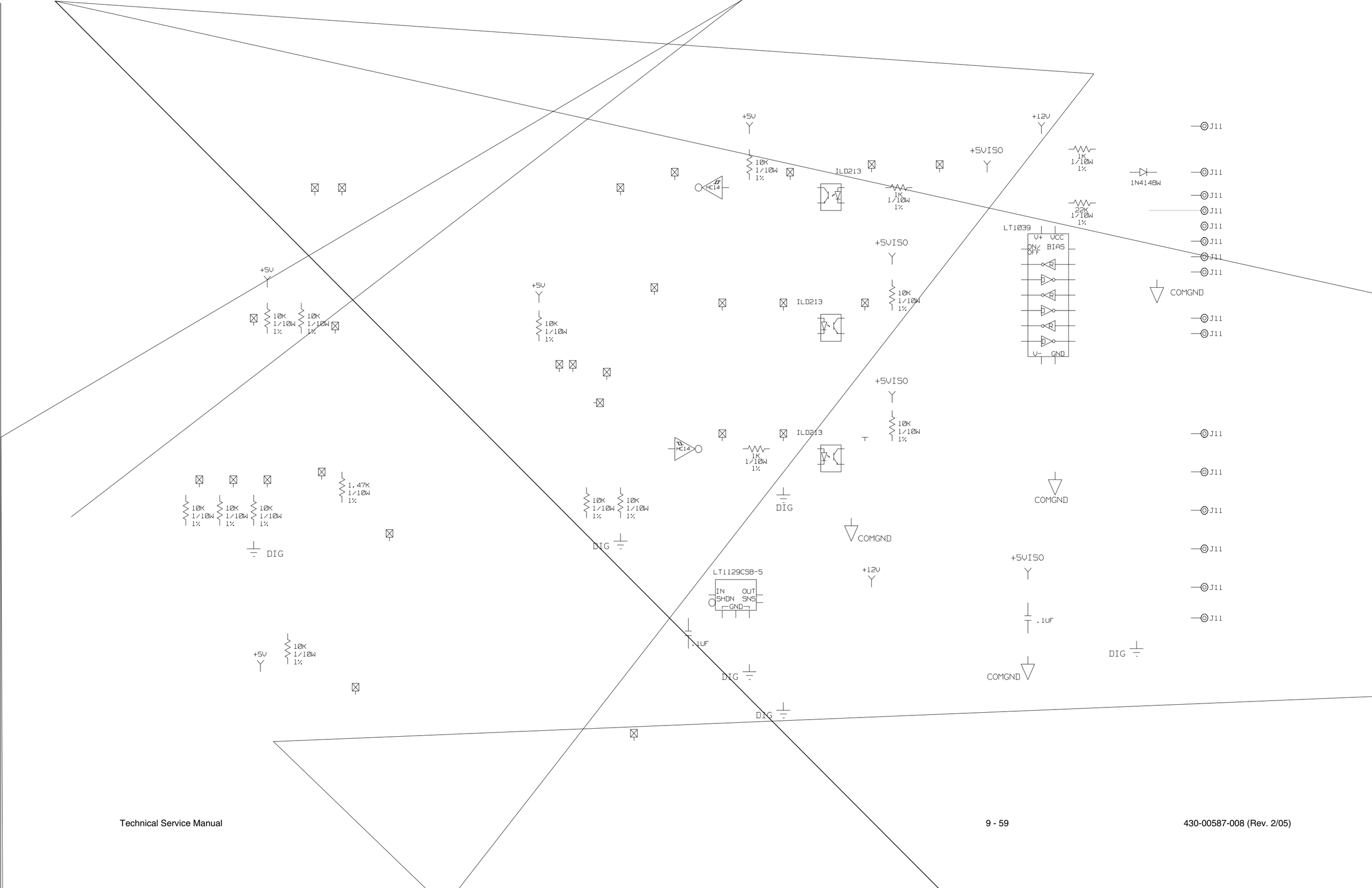
+5V
10K 1/10W 1%
HC14
ILD213
1K 1/10W 1%
+5VISO
+12V
1N4148W
J11
22K 1/10W 1%
LT1039
V+ VCC
ON/OFF BIAS
V- GND
COMGND
1.47K 1/10W 1%
DIG
LT1129CS8-5
IN OUT
SHDN SNS
GND
.1UF

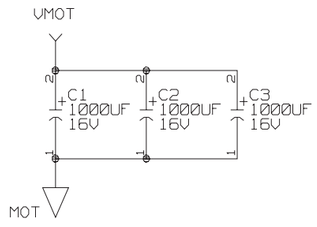

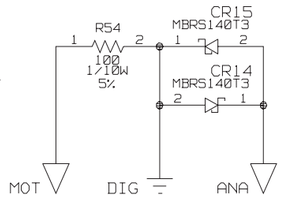

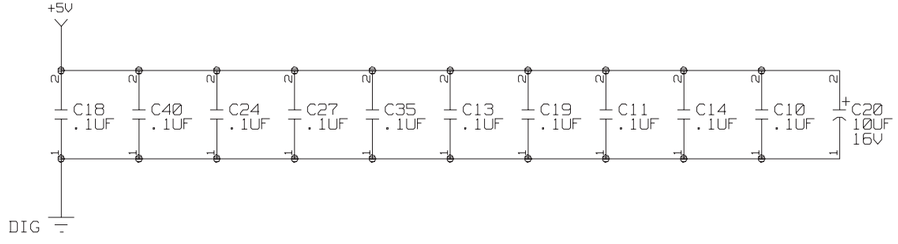

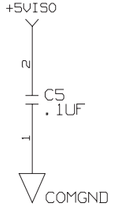

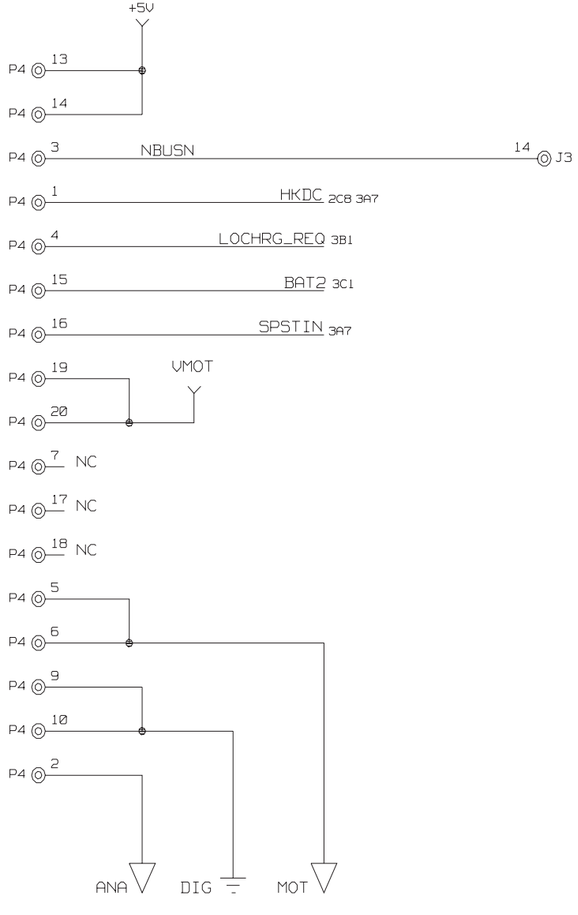

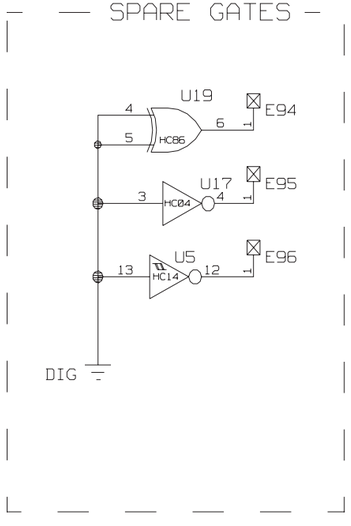

HOSPIRA, INC.	
Figure 9-17. MCU PWA Schematic (XLM with DataPort)	
DRAWING NO. 249-05701-001	Rev. C
	Sheet 9 of 18

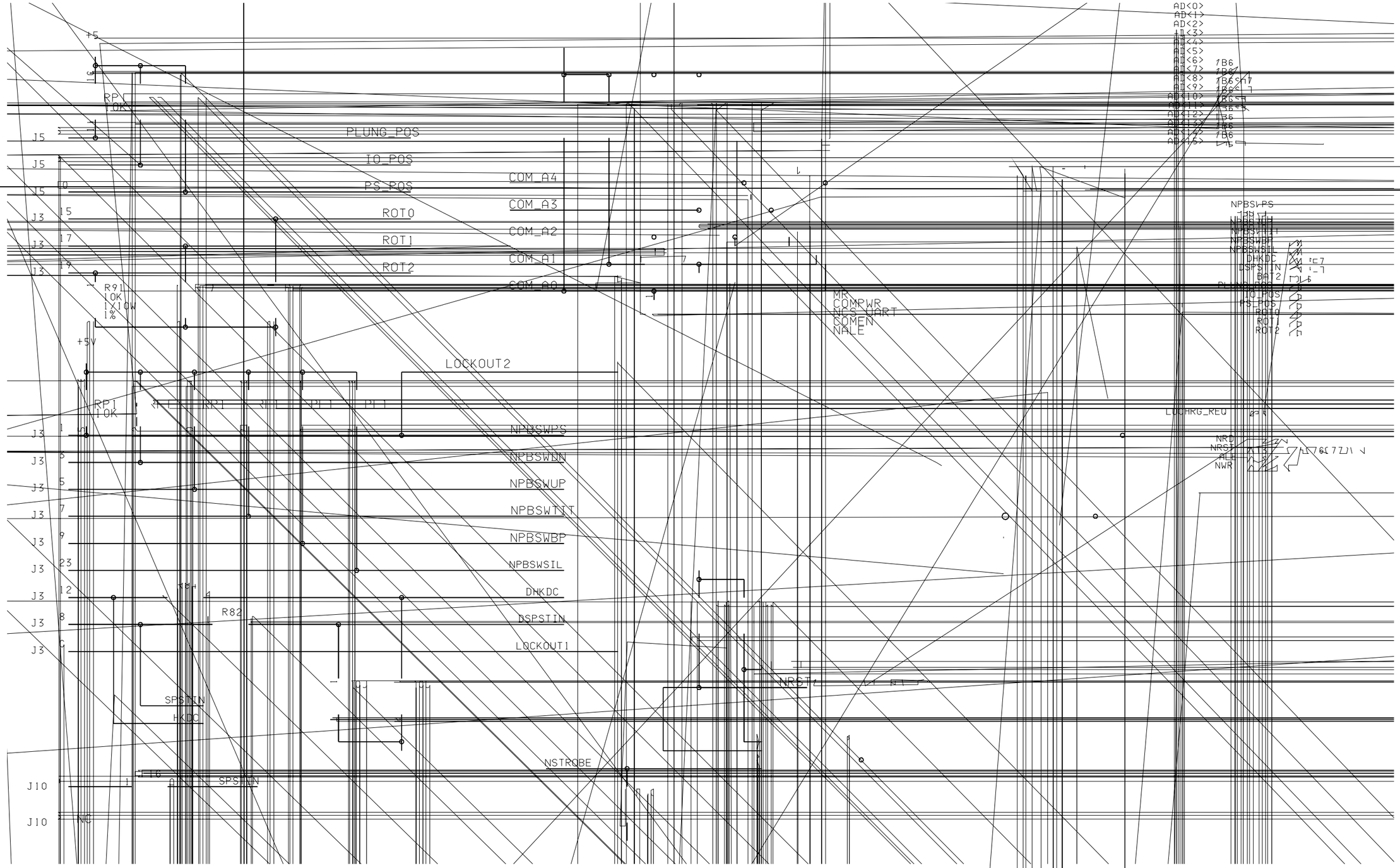
+5
RP
10K
PLUNG_POS
IO_POS
PS_POS
ROT0
ROT1
ROT2
COM_A4
COM_A3
COM_A2
COM_A1
COM_A0
R91
10K
1X10W
1%
+5V
LOCKOUT2
RP1
10K
NPBSWPS
NPBSWDN
NPBSWUP
NPBSWTIT
NPBSWBP
NPBSWSIL
DHKDC
DSPSTIN
LOCKOUTI
R82
SPSTIN
HKDC
NSTROBE
NC
MR
COMPWR
NCS_UART
COMEN
NALE
AD<0>
AD<1>
AD<2>
AD<3>
AD<4>
AD<5>
AD<6>
AD<7>
AD<8>
AD<9>
AD<10>
AD<11>
AD<12>
AD<13>
AD<14>
AD<15>
NPBSWPS
DHKDC
DSPSTIN
BAT2
PLUNG_POS
IO_POS
PS_POS
ROT0
ROT1
ROT2
LOCHRG_REQ
NRD
NRST
ALE
NWR

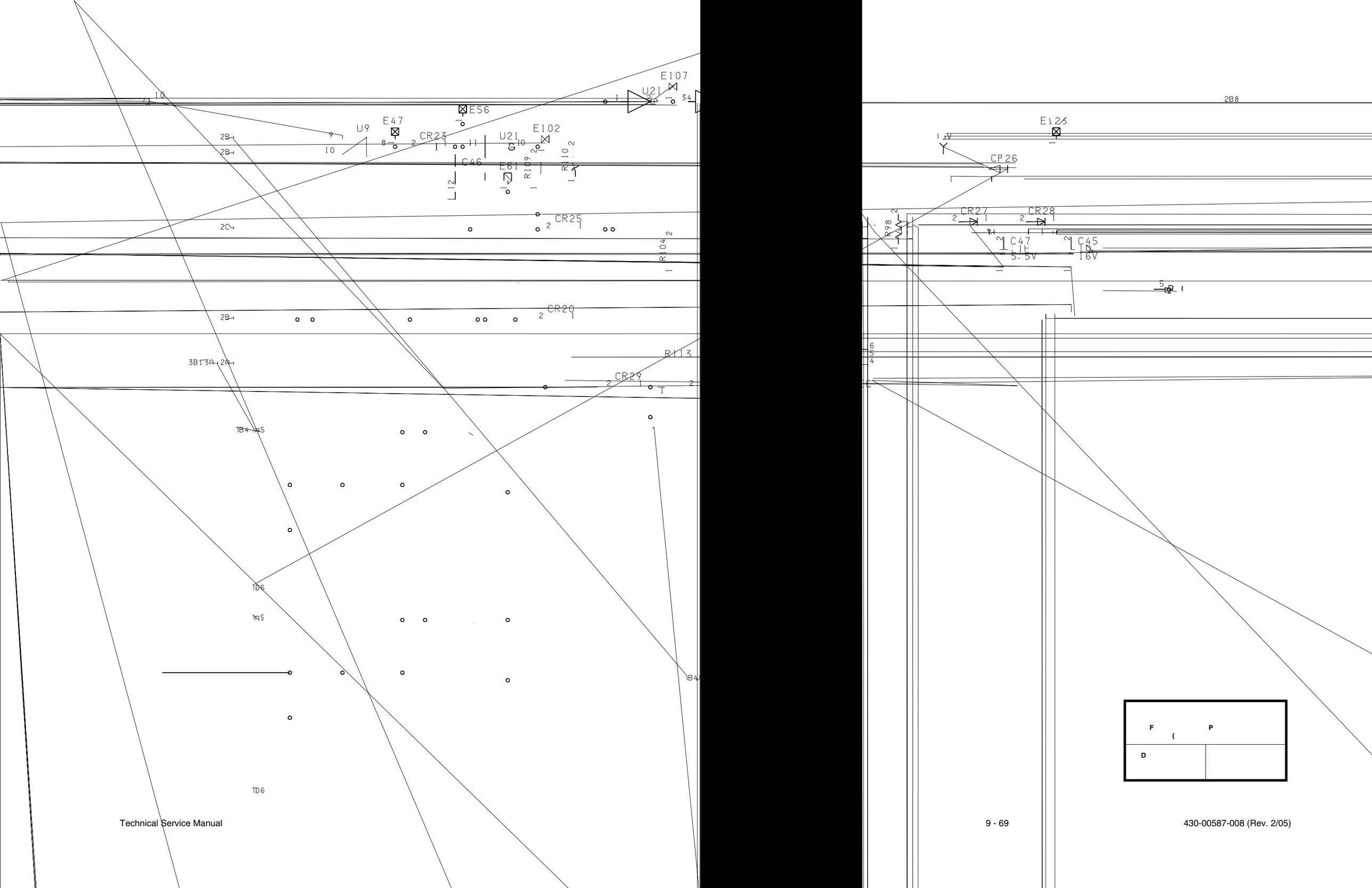
E107
U21
E56
E47
U9
CR23
U21
E102
C46
E61
R109
R110
L12
CR25
R104
CR20
R113
CR29
2B8
E125
CP26
CR27
CR28
R98
C47
5.5V
C45
16V
F
P
D

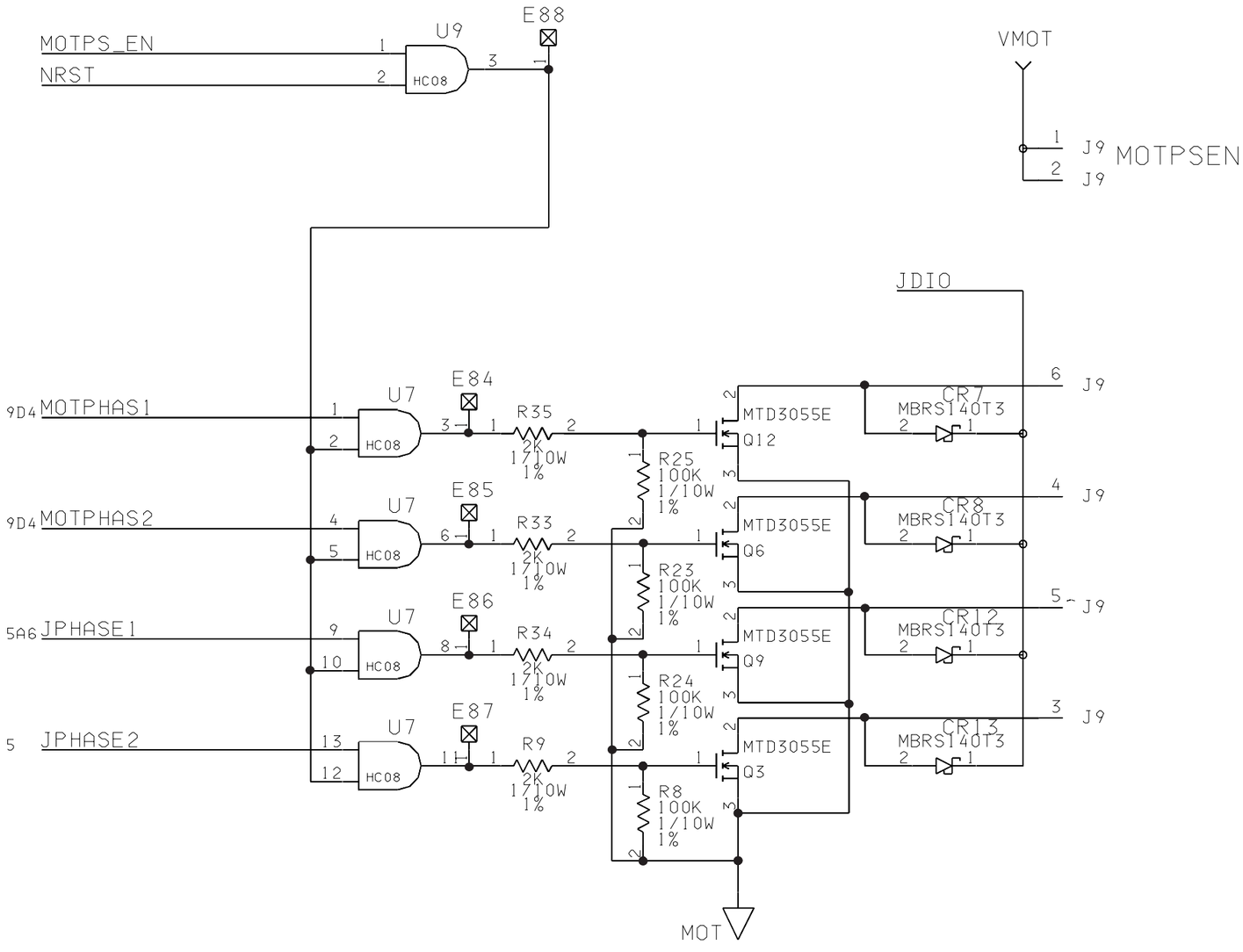
MOTPS_EN
NRST
U9
HC08
E88
VMOT
J9
MOTPSEN
JDIO
9D4 MOTPHAS1
U7
E84
R35
2K
1/10W
1%
MTD3055E
Q12
CR7
MBRS140T3
R25
100K
1/10W
1%
9D4 MOTPHAS2
E85
R33
Q6
CR8
R23
5A6 JPHASE1
E86
R34
Q9
CR12
R24
5 JPHASE2
E87
R9
Q3
CR13
R8
MOT

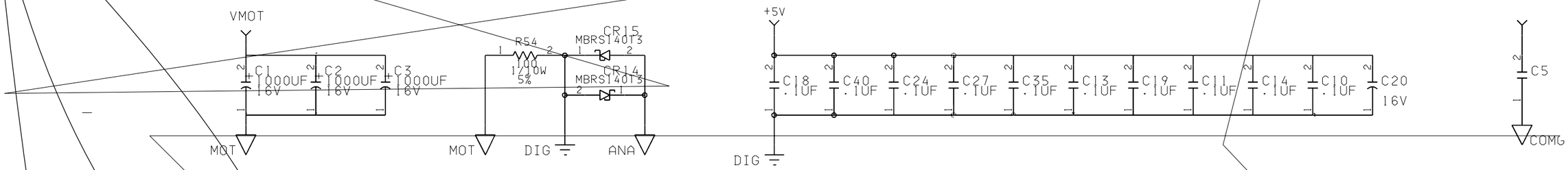
VMOT
C1
1000UF
16V
C2
1000UF
16V
C3
1000UF
16V
R54
100
1/10W
5%
CR15
MBRS140T3
CR14
MBRS140T3
MOT
MOT
DIG
ANA
+5V
C18
.1UF
C40
.1UF
C24
.1UF
C27
.1UF
C35
.1UF
C13
.1UF
C19
.1UF
C11
.1UF
C14
.1UF
C10
.1UF
C20
16V
DIG
C5
COMG

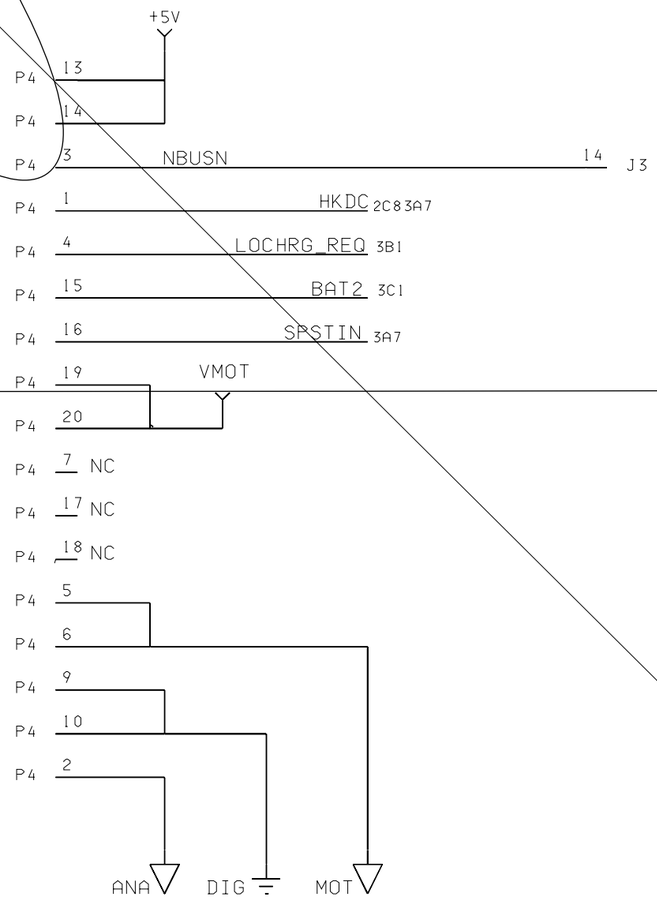
+5V
P4 13
P4 14
P4 3 NBUSN 14 J3
P4 1 HKDC 2C8 3A7
P4 4 LOCHRG_REQ 3B1
P4 15 BAT2 3C1
P4 16 SPSTIN 3A7
P4 19 VMOT
P4 20
P4 7 NC
P4 17 NC
P4 18 NC
P4 5
P4 6
P4 9
P4 10
P4 2
ANA
DIG
MOT

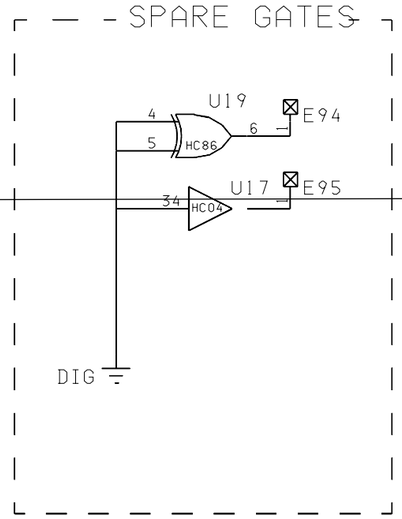
SPARE GATES
U19
HC86
4
5
6
E94
U17
HC04
34
E95
DIG

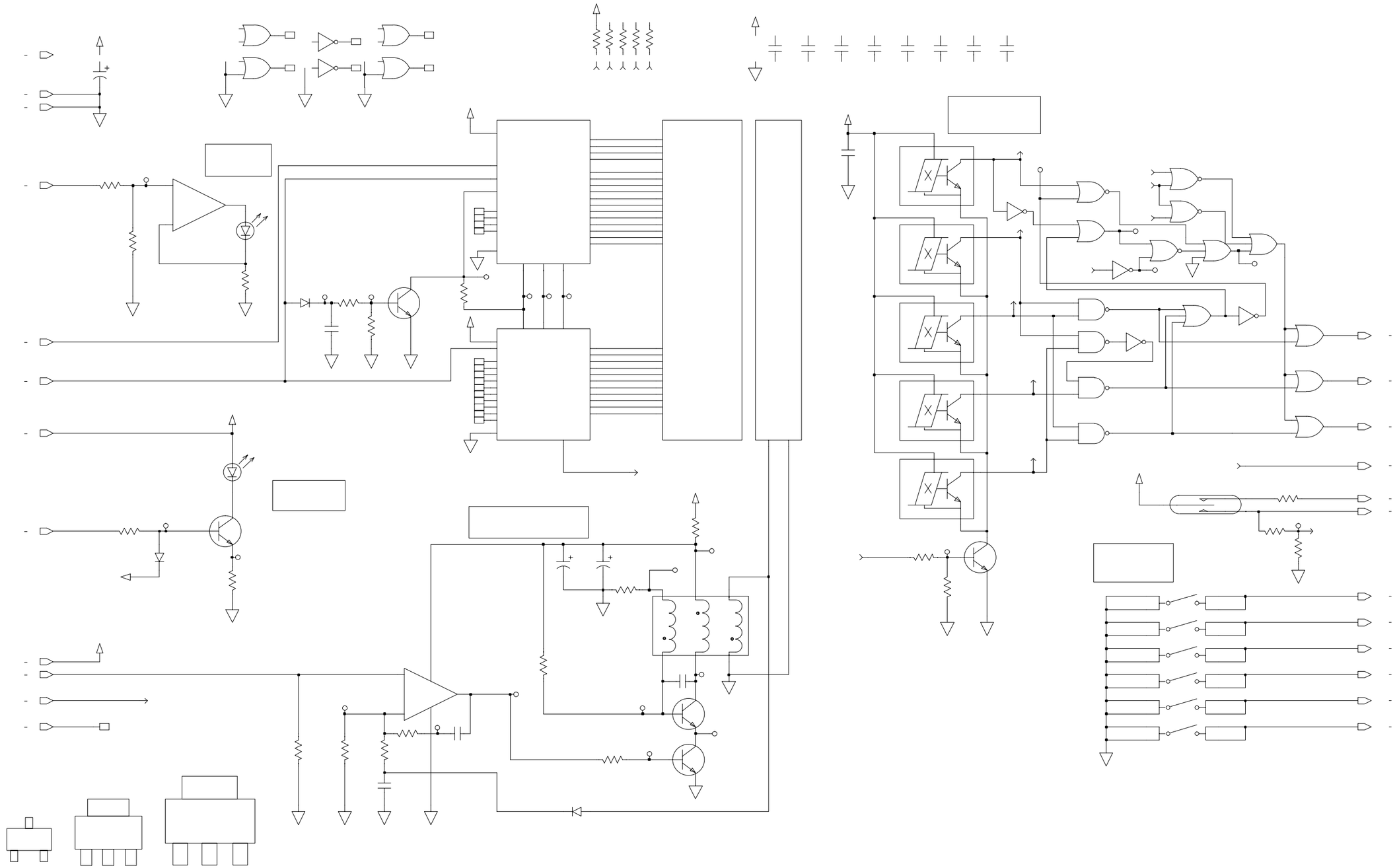

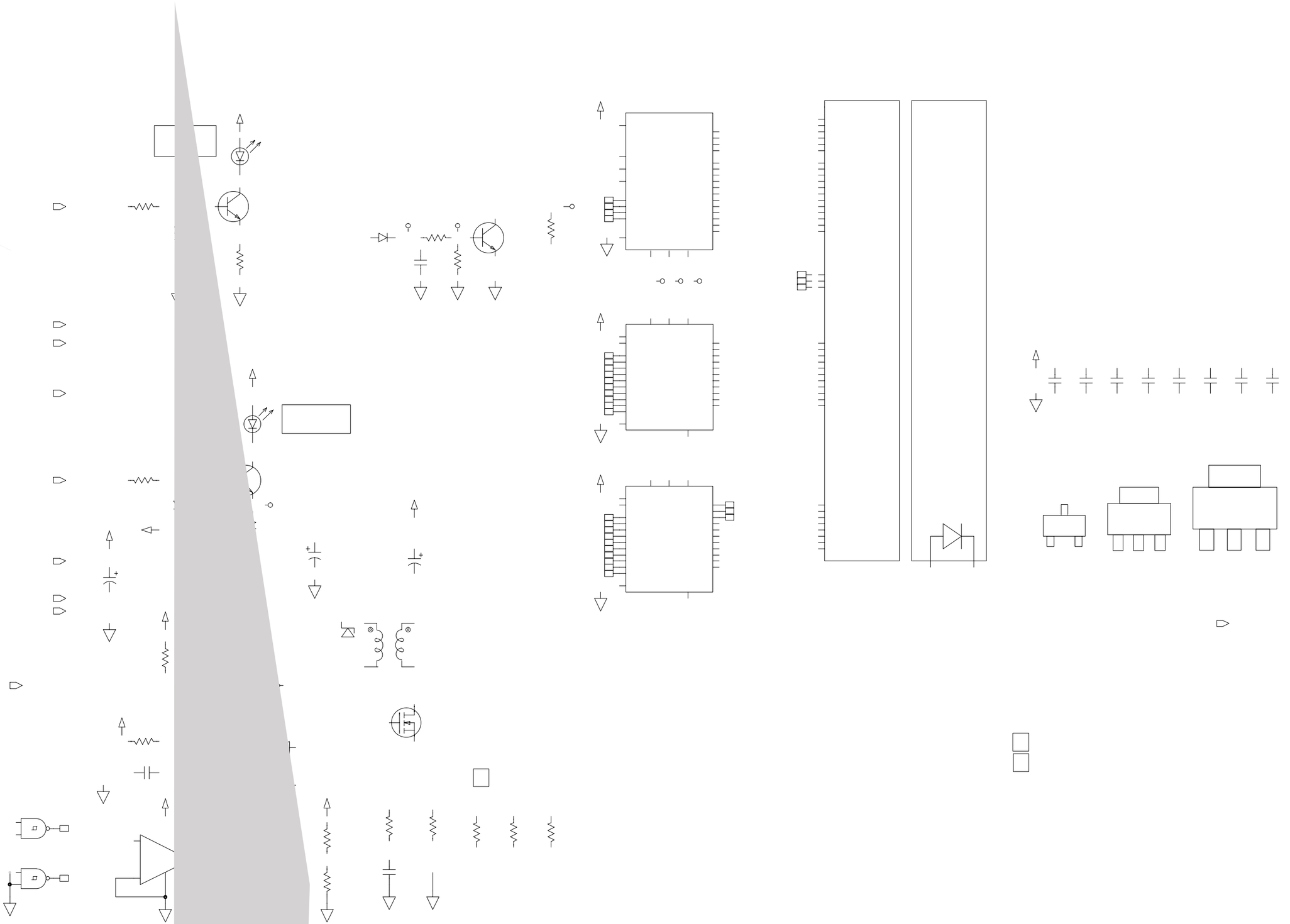

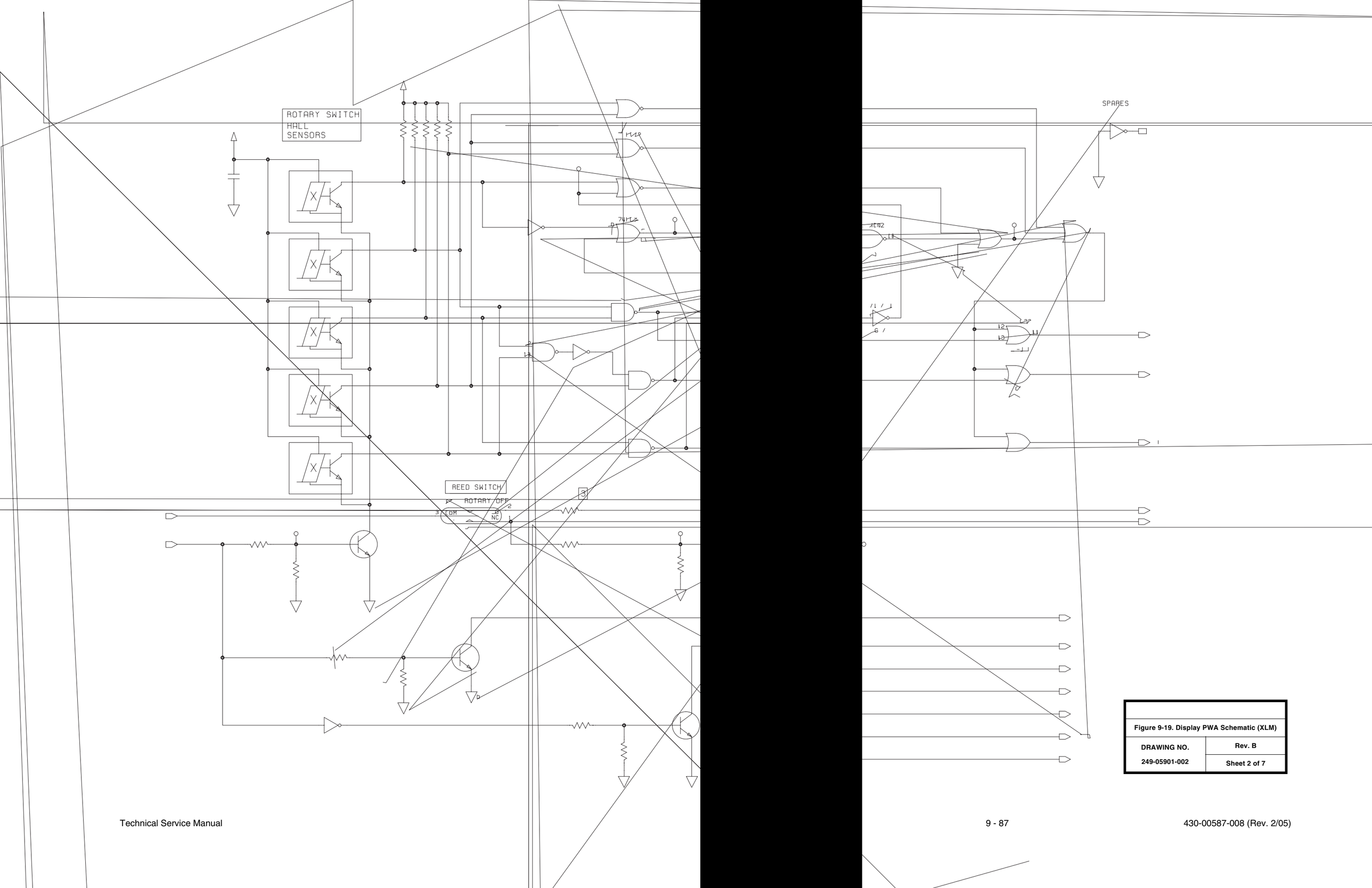

Figure 9-19. Display PWA Schematic (XLM)	
DRAWING NO. 249-05901-002	Rev. B
	Sheet 2 of 7

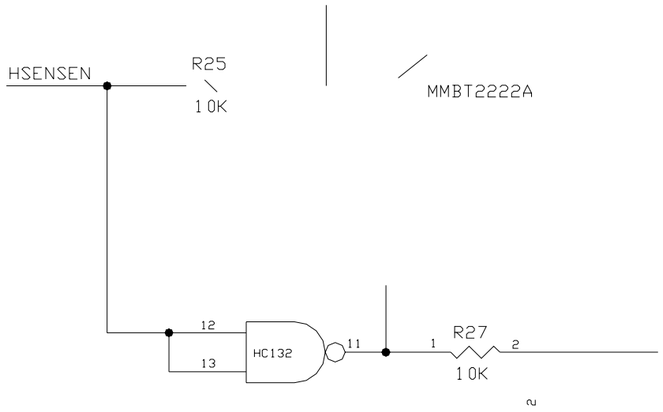
HSENSEN
R25
10K
MMBT2222A
12
13
HC132
11
1
R27
2
10K

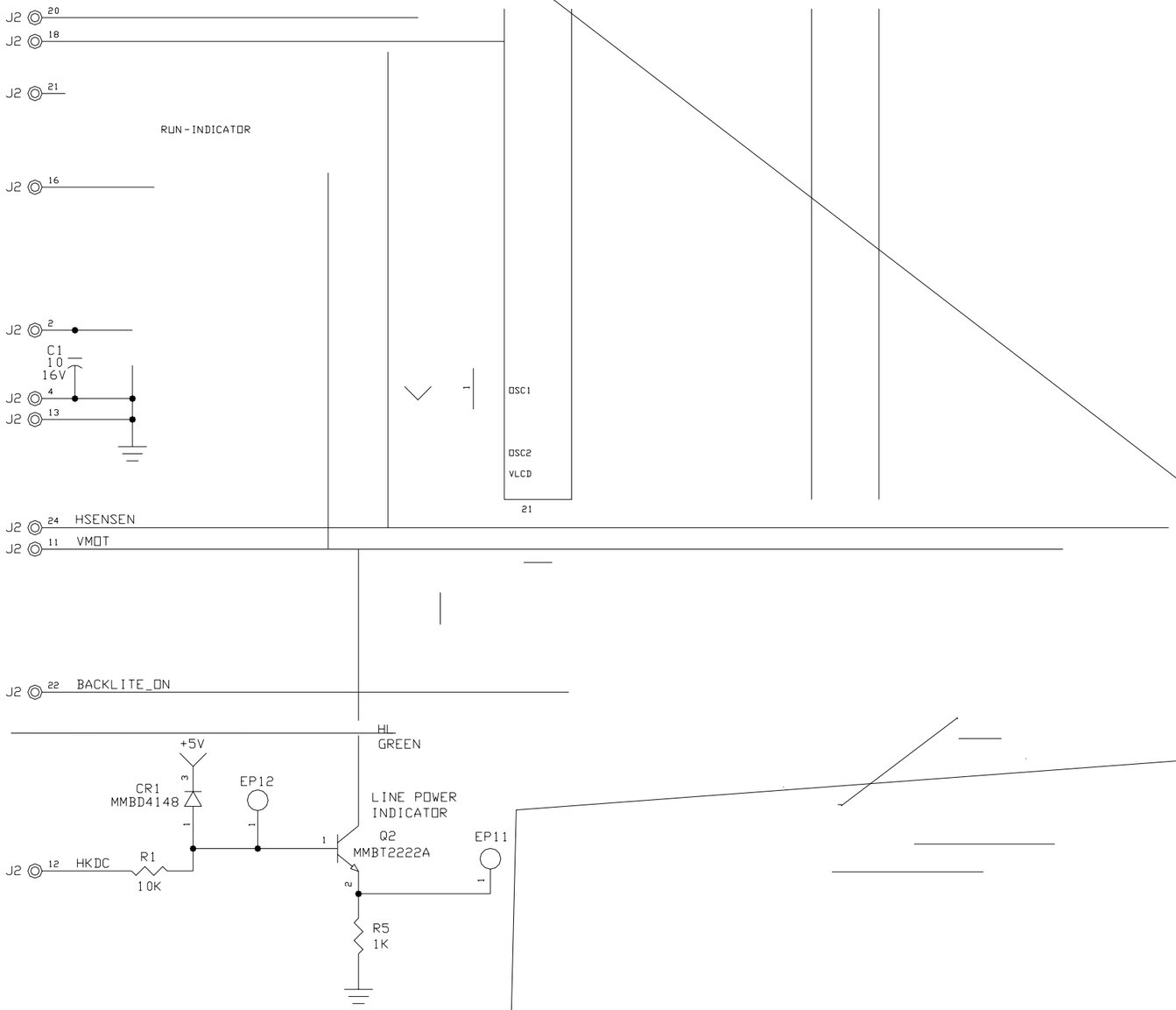
J2 20
J2 18
J2 21
RUN-INDICATOR
J2 16
J2 2
C1
10
16V
J2 4
J2 13
1
OSC1
OSC2
VLCD
21
J2 24 HSENSEN
J2 11 VMOT
J2 22 BACKLITE_ON
HL
GREEN
+5V
3
CR1
MMBD4148
1
EP12
1
LINE POWER
INDICATOR
1
Q2
MMBT2222A
EP11
1
J2 12 HKDC
R1
10K
2
R5
1K

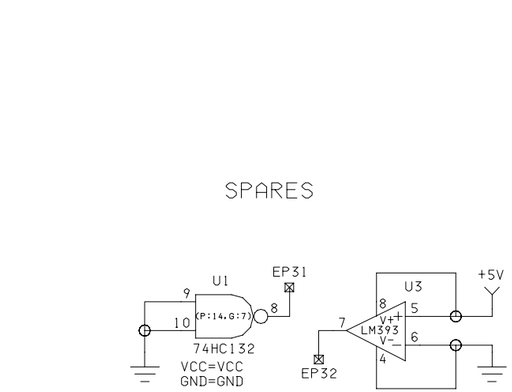

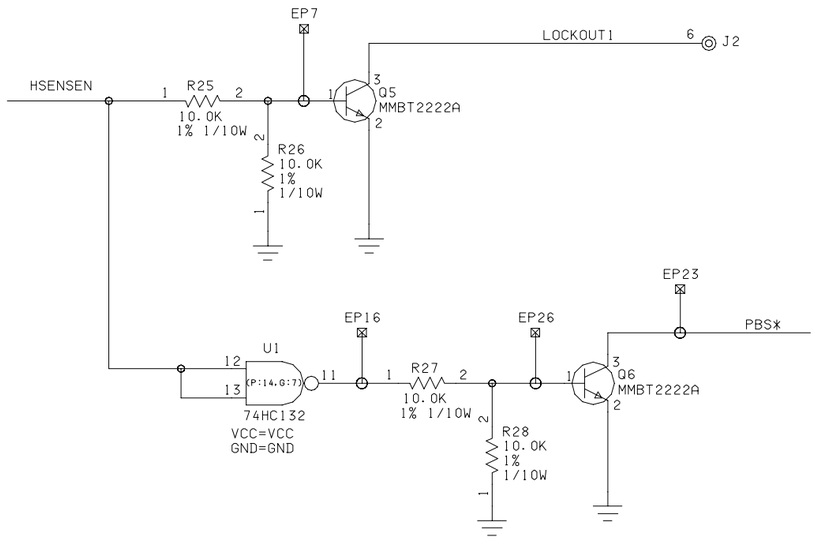

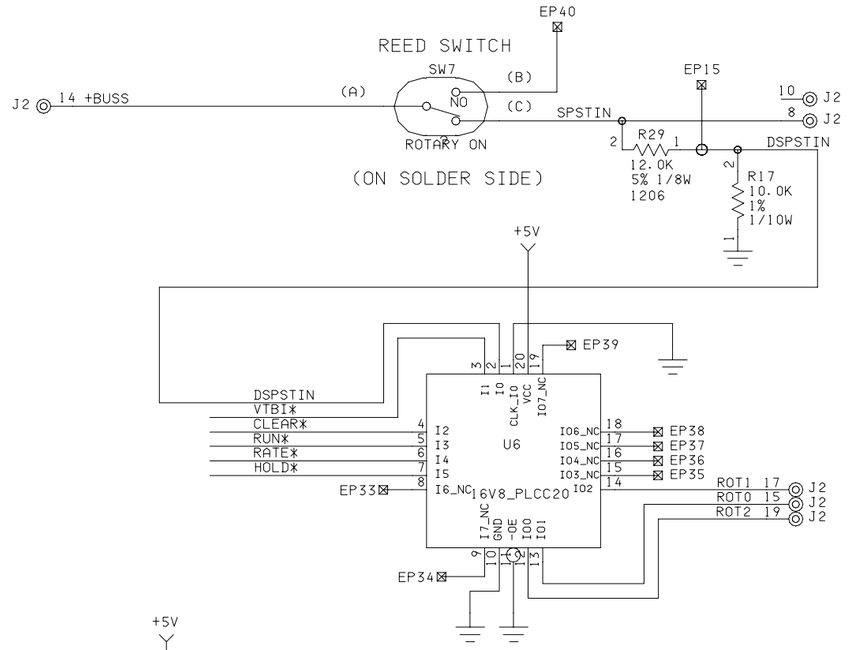

HOSPIRA, INC.	
Figure 9-19. Display PWA Schematic (XLM)	
DRAWING NO. 249-05901-004	Rev. B
	Sheet 5 of 7

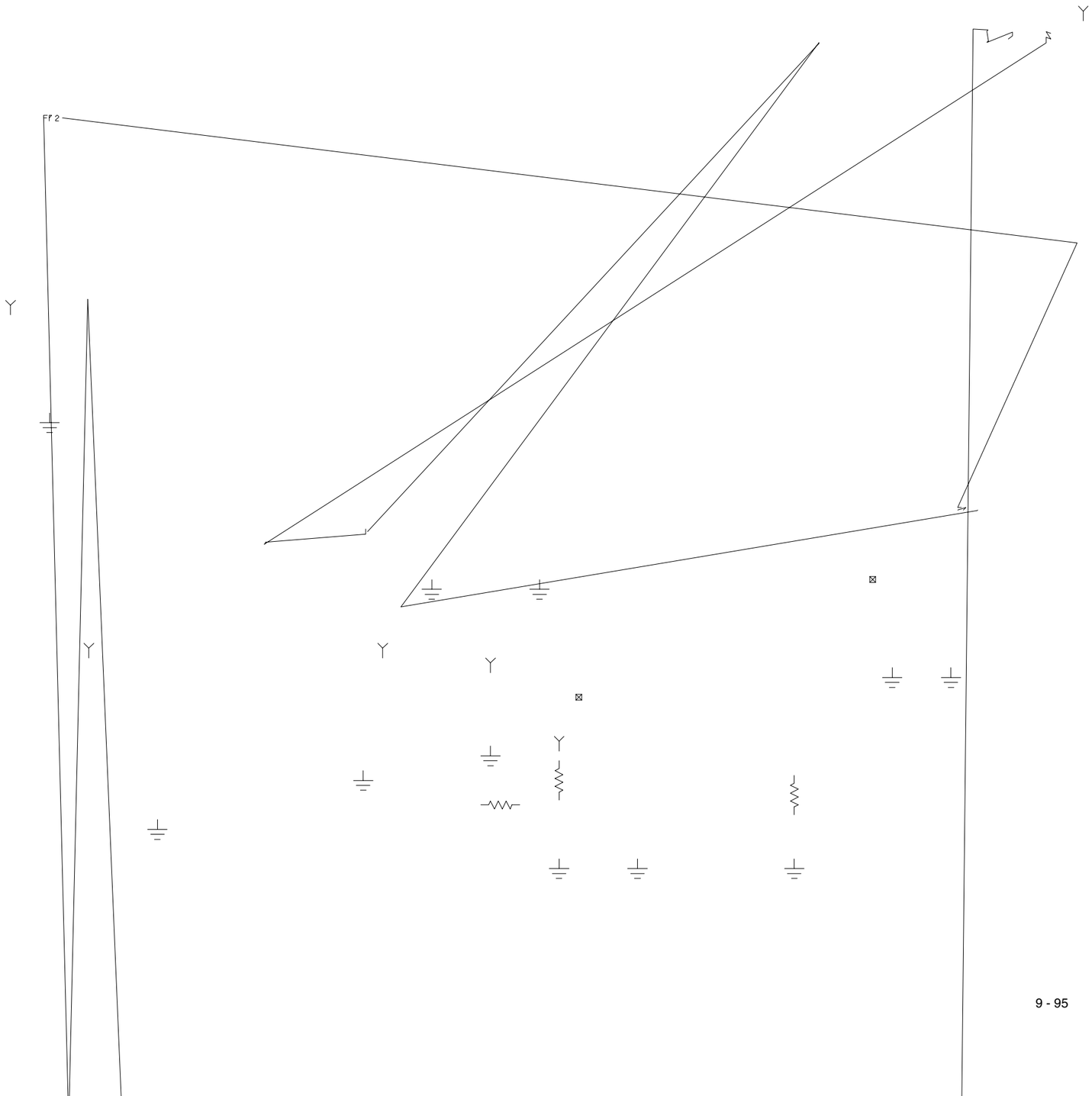
Fr 2

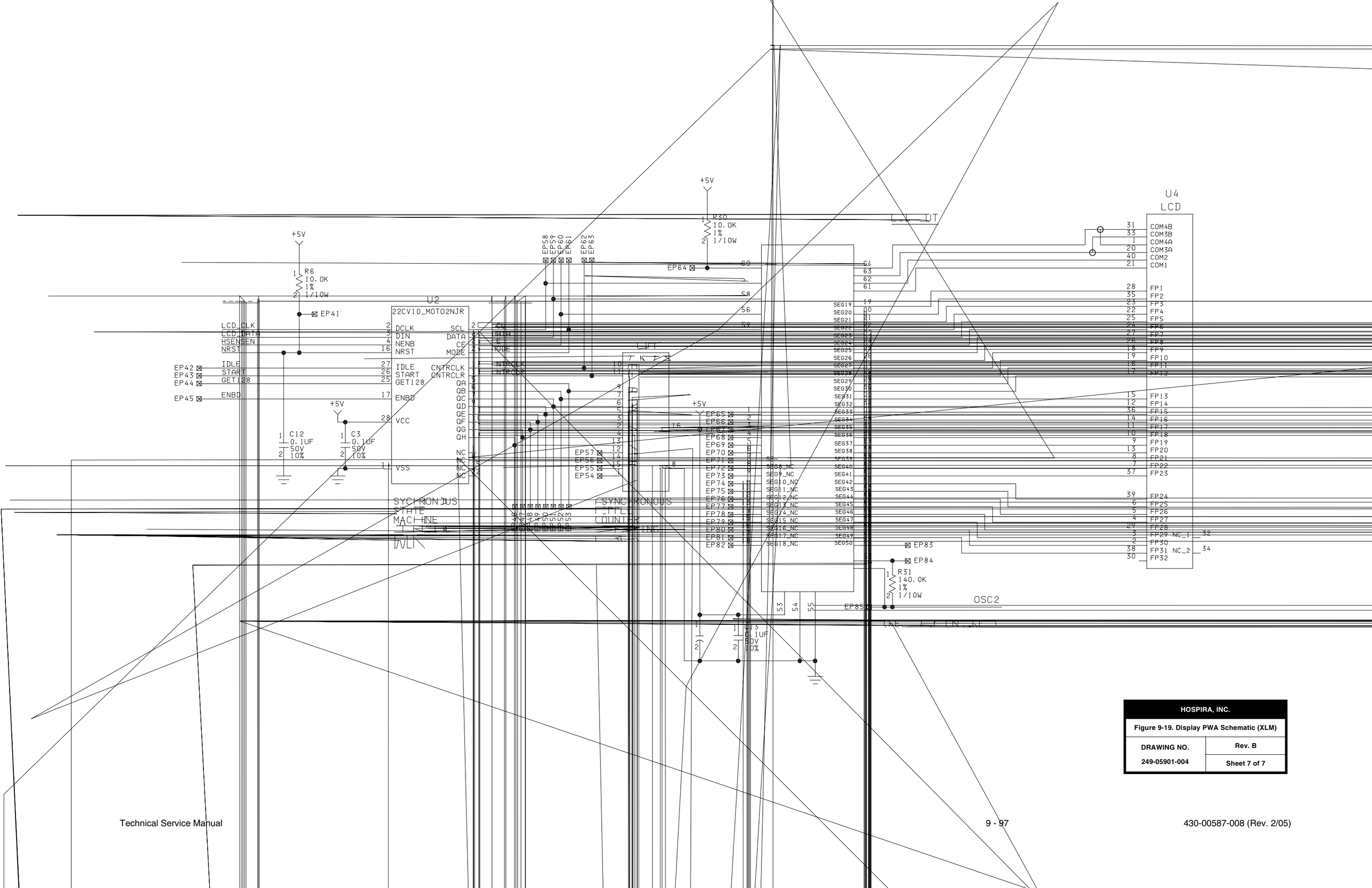

HOSPIRA, INC.	
Figure 9-19. Display PWA Schematic (XLM)	
DRAWING NO. 249-05901-004	Rev. B
	Sheet 7 of 7

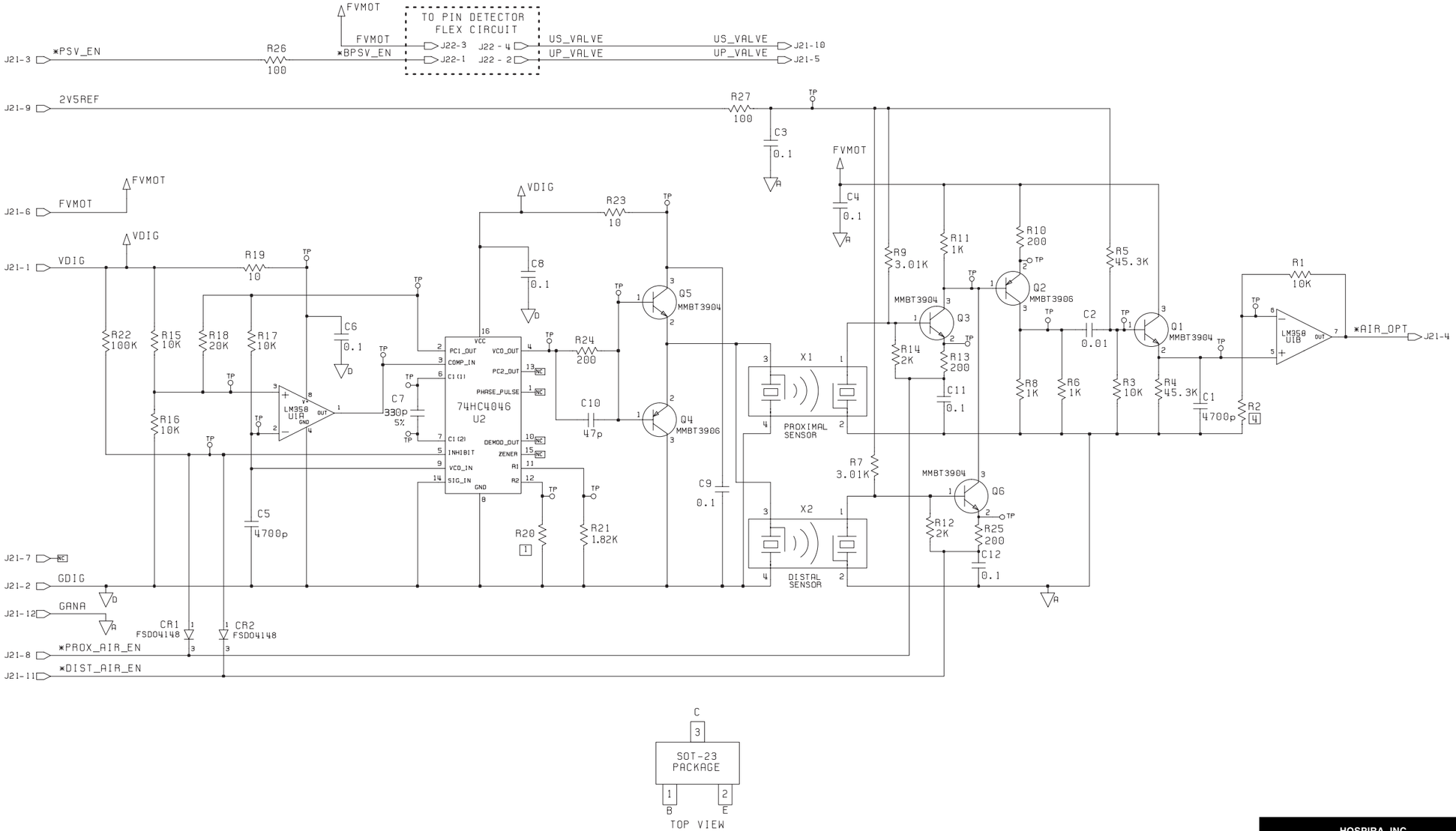

HOSPIRA, INC.	
Figure 9-20. Bubble Sensor PWA Schematic	
DRAWING NO. 249-00536-005	Rev. L
	Sheet 1 of 3

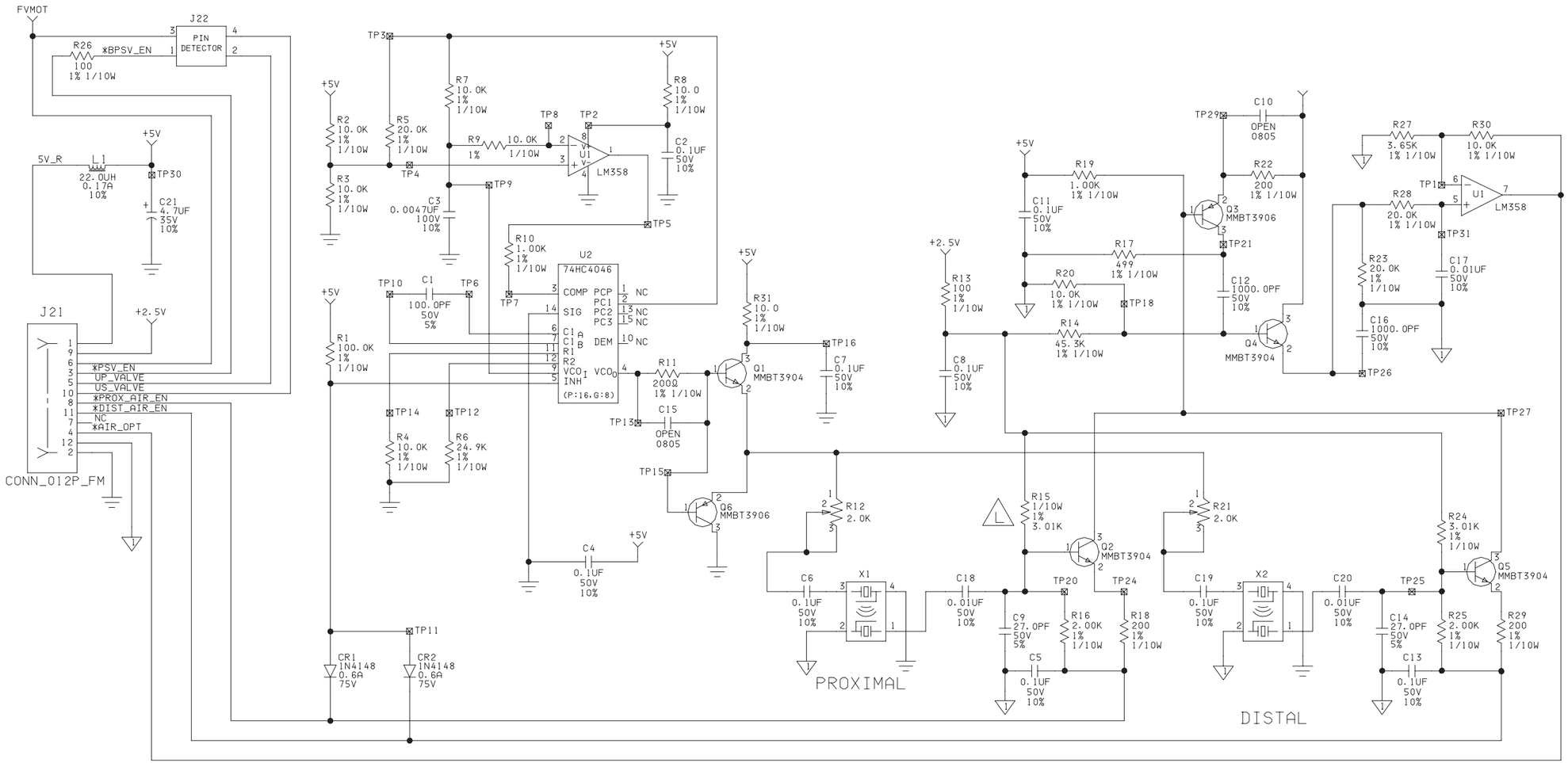

HOSPIRA, INC.	
Figure 9-20. Bubble Sensor PWA Schematic	
DRAWING NO. 249-00536-007	Rev. L
	Sheet 2 of 3

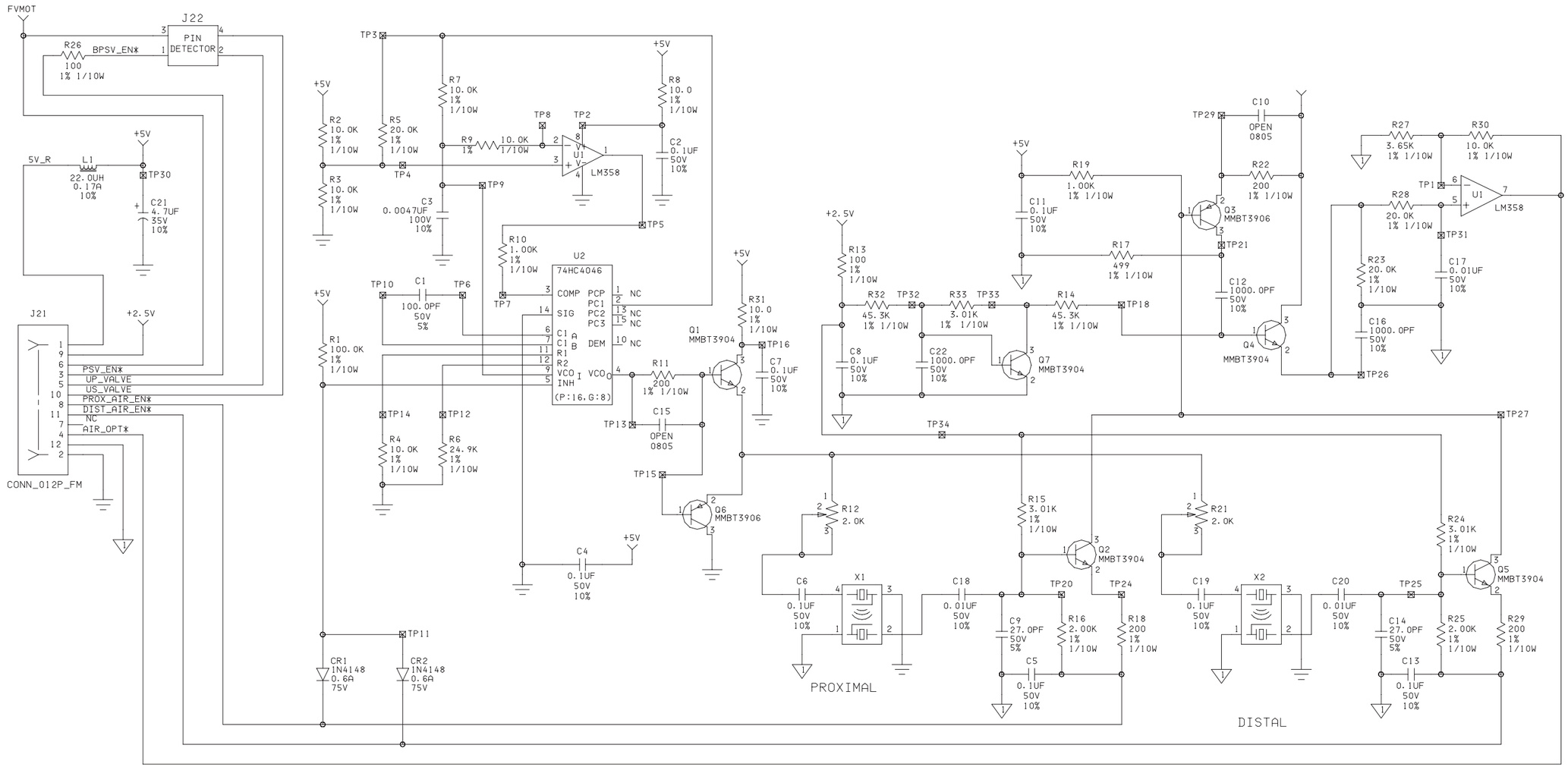

BOTTOM VIEW

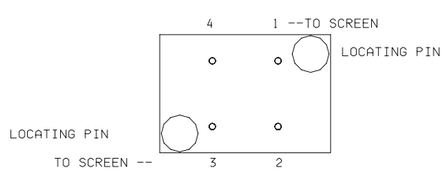

HOSPIRA, INC.	
Figure 9-20. Bubble Sensor PWA Schematic	
DRAWING NO. 249-00536-008	Rev. L
	Sheet 3 of 3

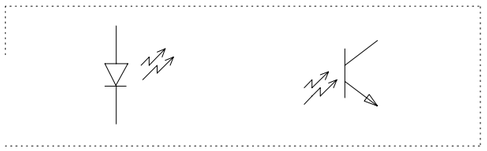

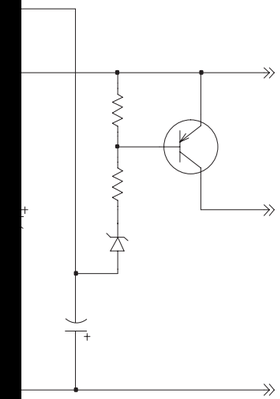

3. PROVISIONAL

4. R 1 IS LOCATED AT MI F˜X CABLE ASM.

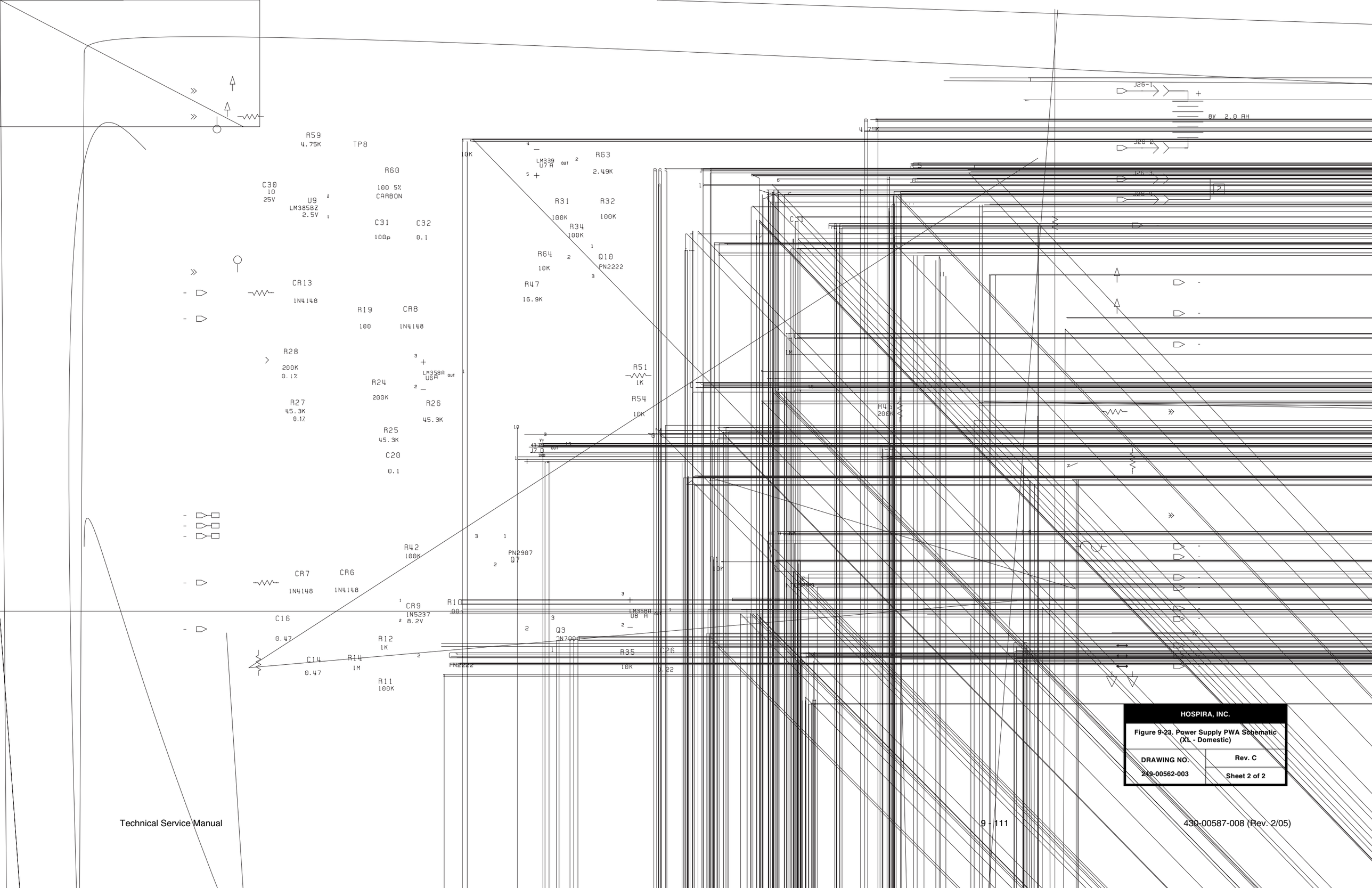

HOSPIRA, INC.	
Figure 9-23. Power Supply PWA Schematic (XL - Domestic)	
DRAWING NO.	Rev. C
249-00562-003	Sheet 2 of 2

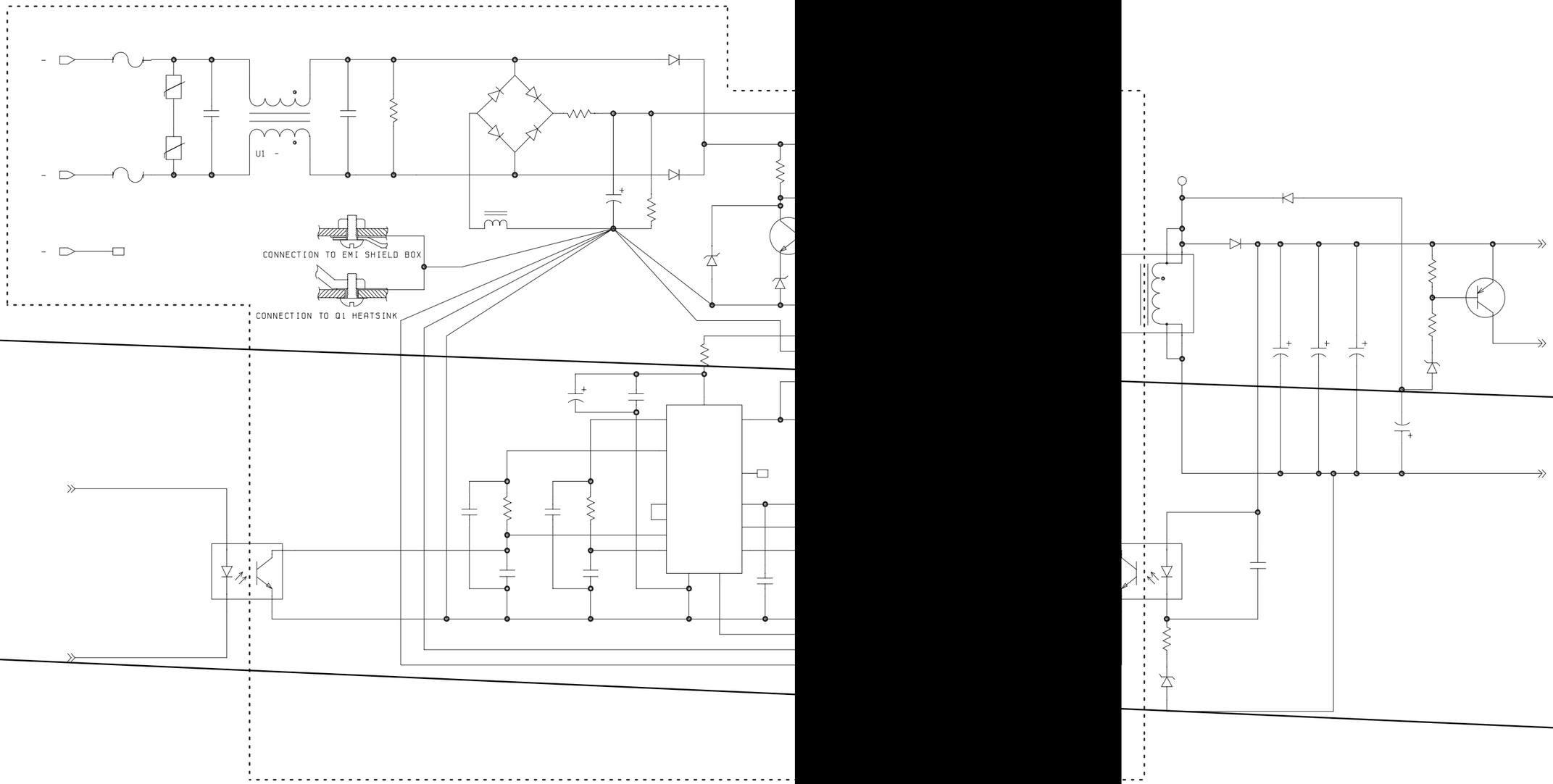
U1
CONNECTION TO EMI SHIELD BOX
CONNECTION TO Q1 HEATSINK

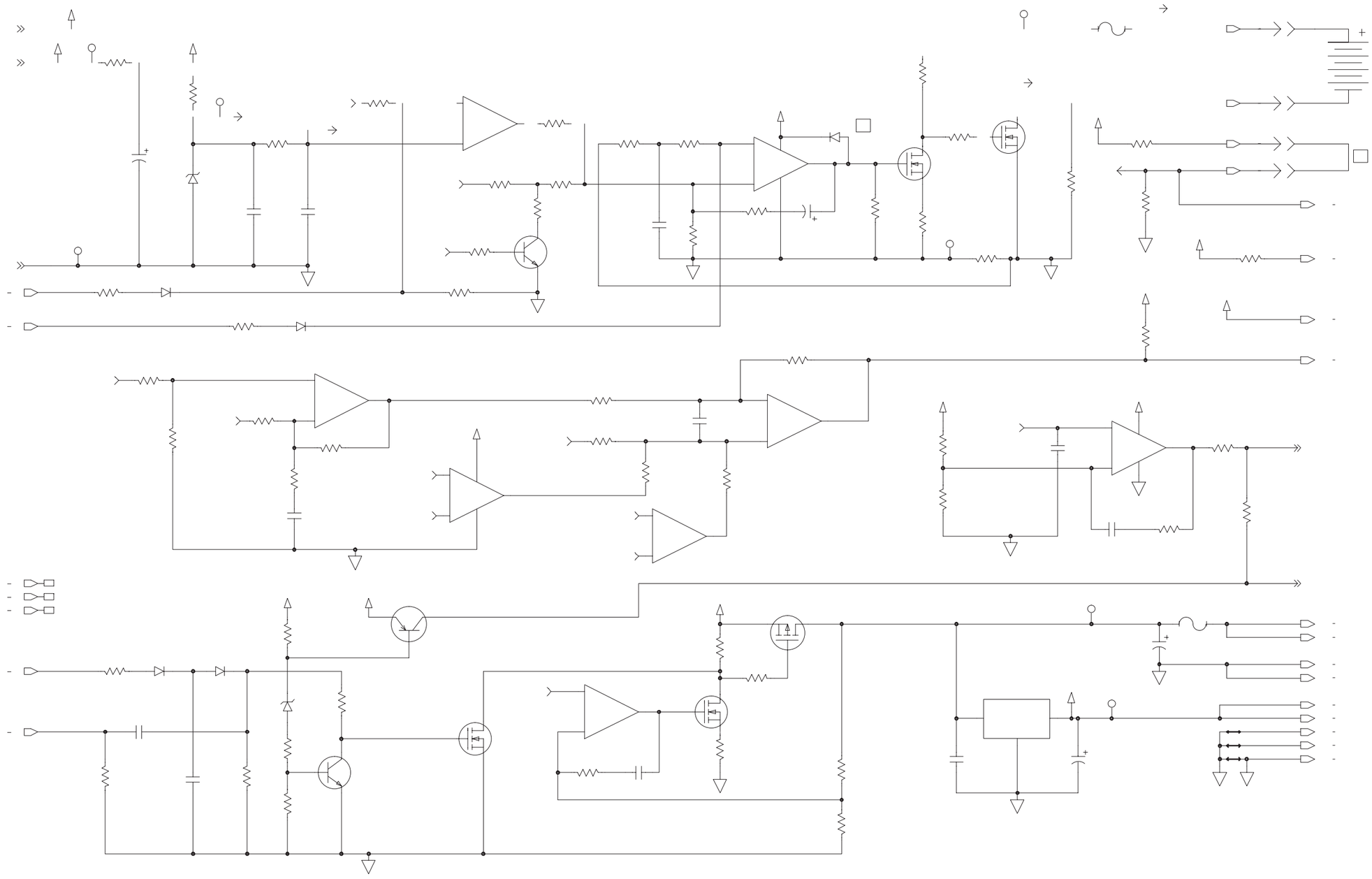

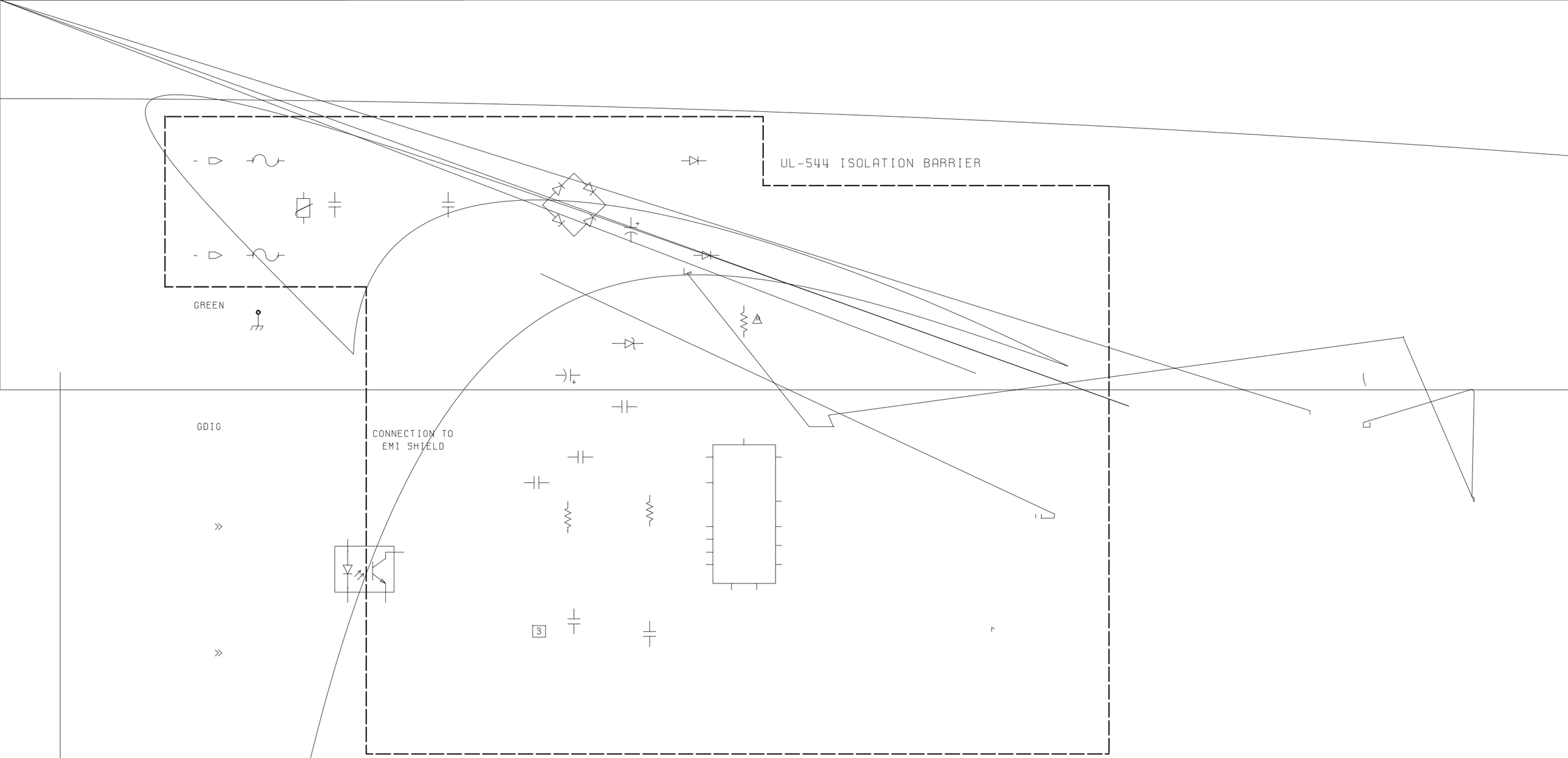

NOTES:

1. UNLESS OTHERWISE SPECIFIED:
   ALL R'S IN OHMS, 1%
   ALL C'S IN uF, 20%, 50V
2. J26 PINS 3 ~~AND 4 AR~~

3. PROVISIONAL

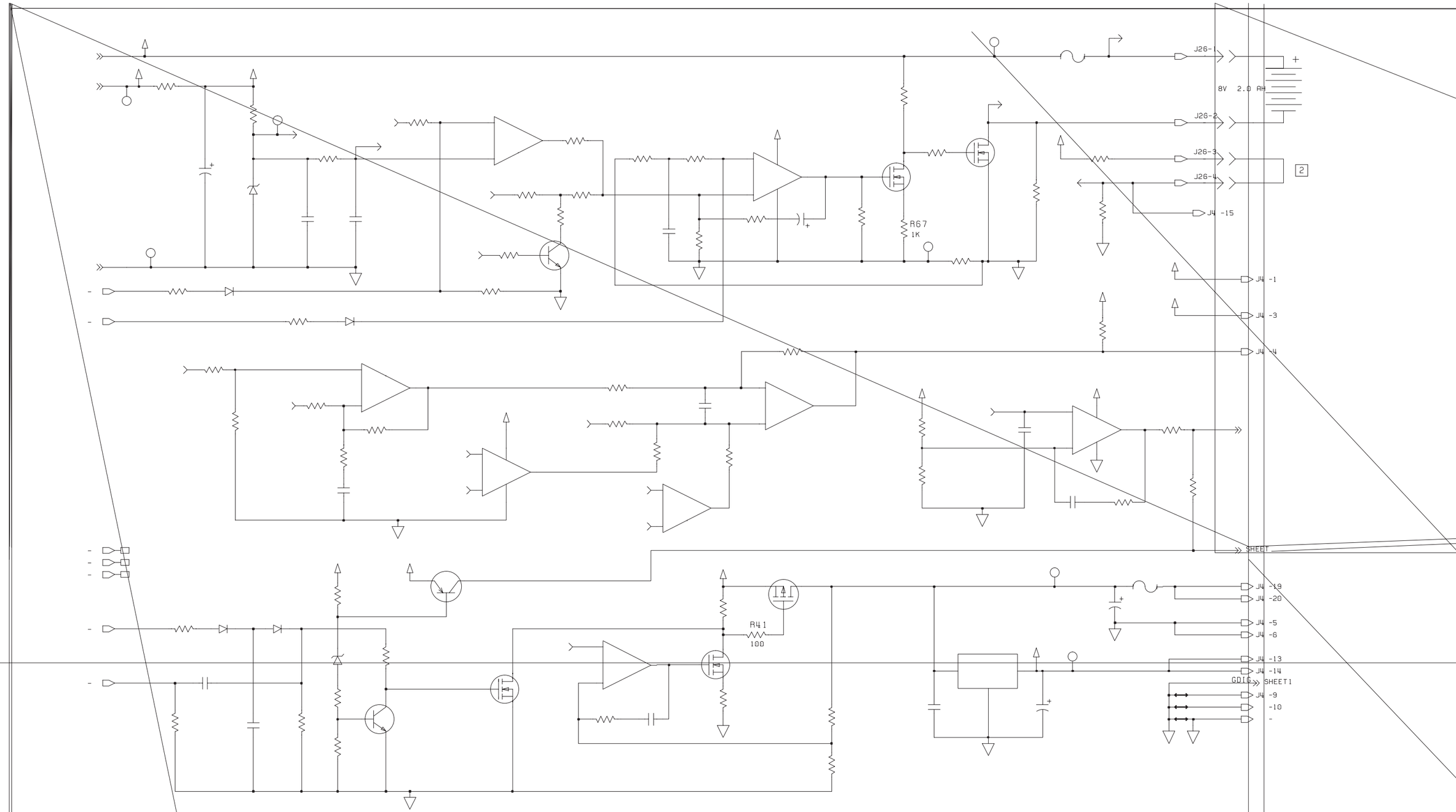
J26-
8V 2.0 AH
J26-2
J26-3
J26-4
2
J4 -15
R67
1K
J4 -1
J4 -3
J4 -4
SHEET
J4 -19
J4 -20
J4 -5
J4 -6
J4 -13
J4 -14
GDIG
SHEET1
J4 -9
-10
R41
100

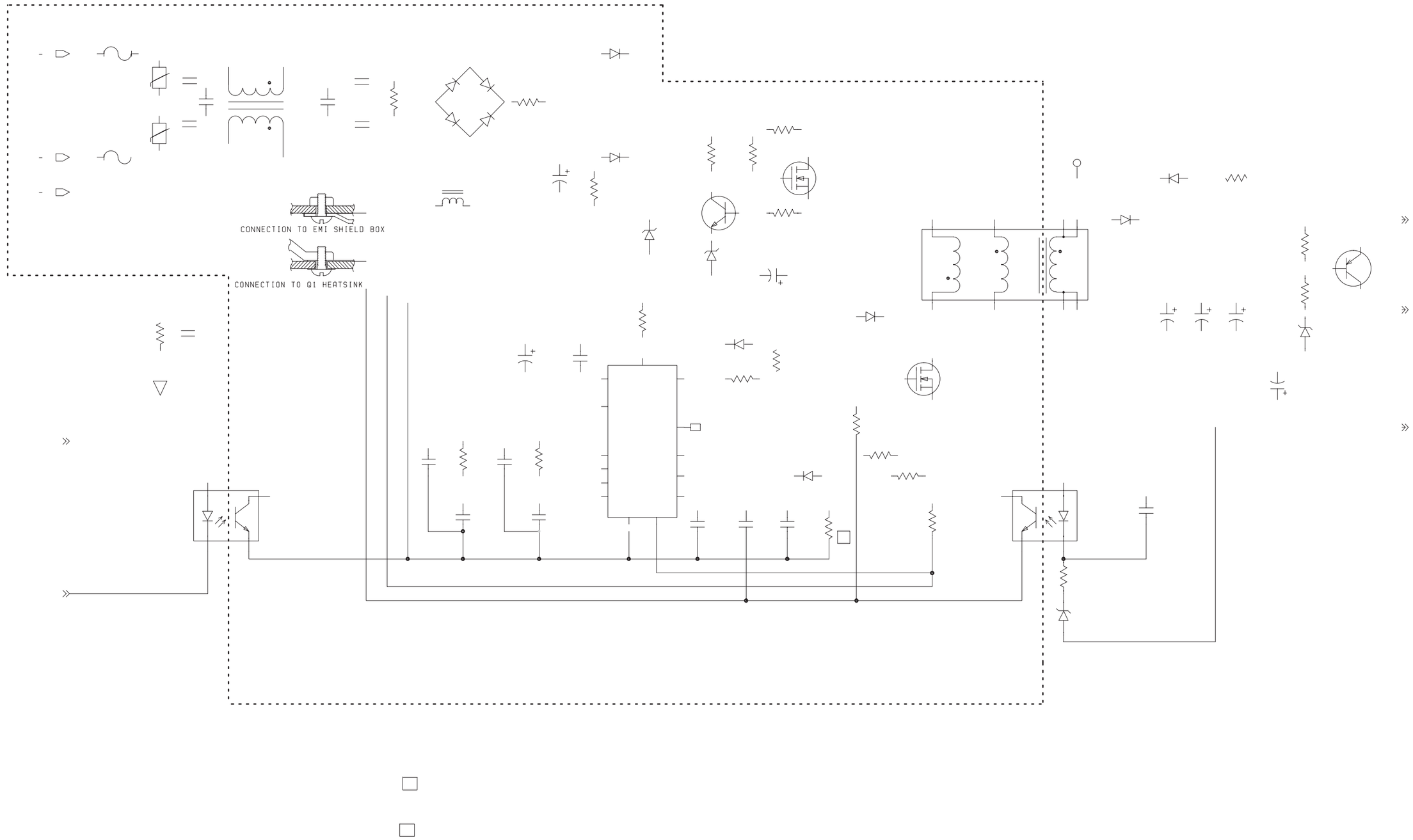
CONNECTION TO EMI SHIELD BOX
CONNECTION TO Q1 HEATSINK

Technical Service Manual

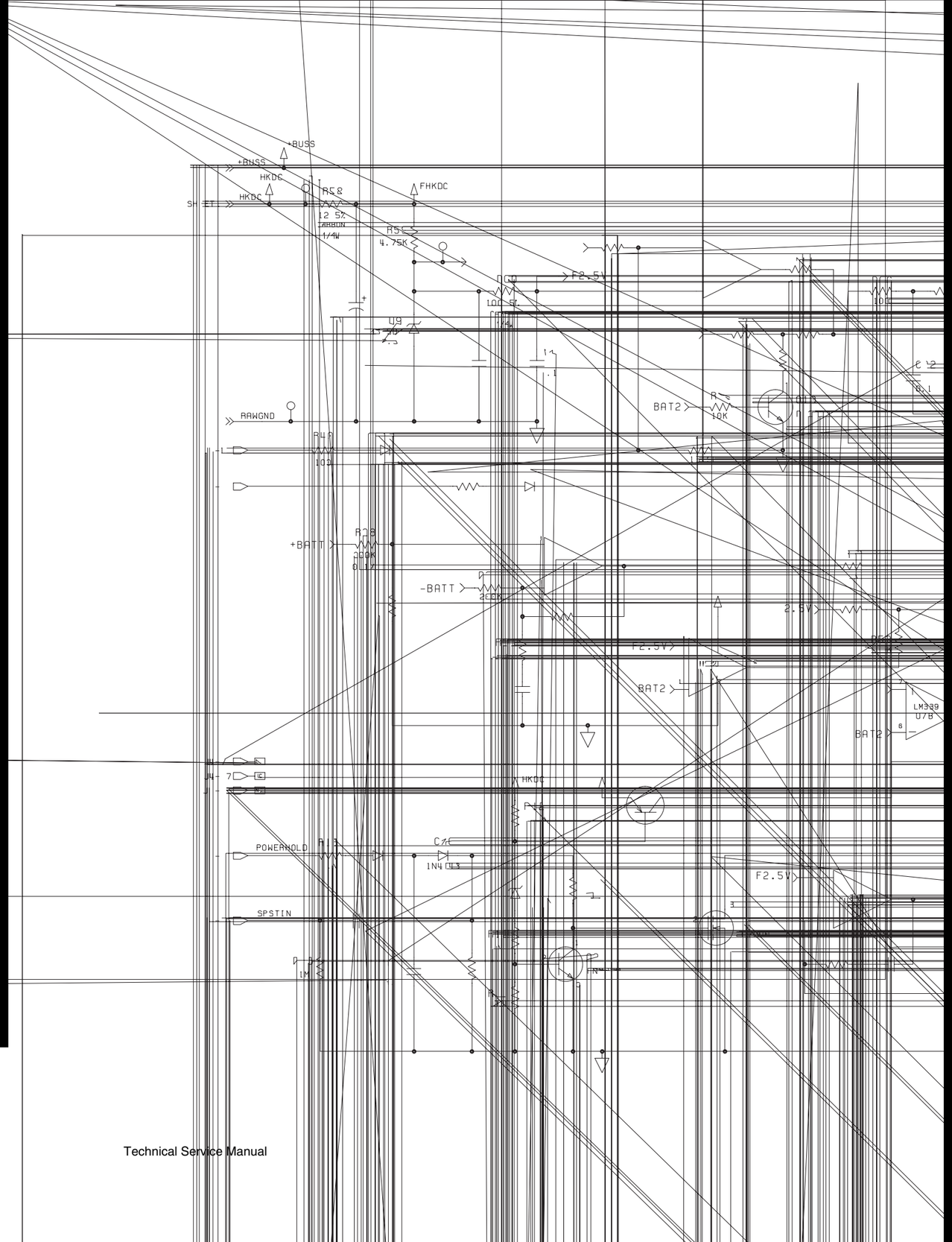
+BUSS
+BUSS
HKDC
HKDC
FHKDC
R58
12 5%
CARBON
1/4W
R59
4.75K
F2.5V
U9
RAWGND
R40
100
BAT2
10K
+BATT
R38
200K
-BATT
200K
2.5V
F2.5V
BAT2
LM339
U7B
BAT2
HKDC
POWERHOLD
1N4143
F2.5V
SPSTIN
1M

Technical Service Manual

HOSPIRA, INC.	
Figure 9-27. Power Supply PWA Schematic (XLM with DataPort)	
DRAWING NO. 249-05916-012	Rev. G
	Sheet 3 of 4

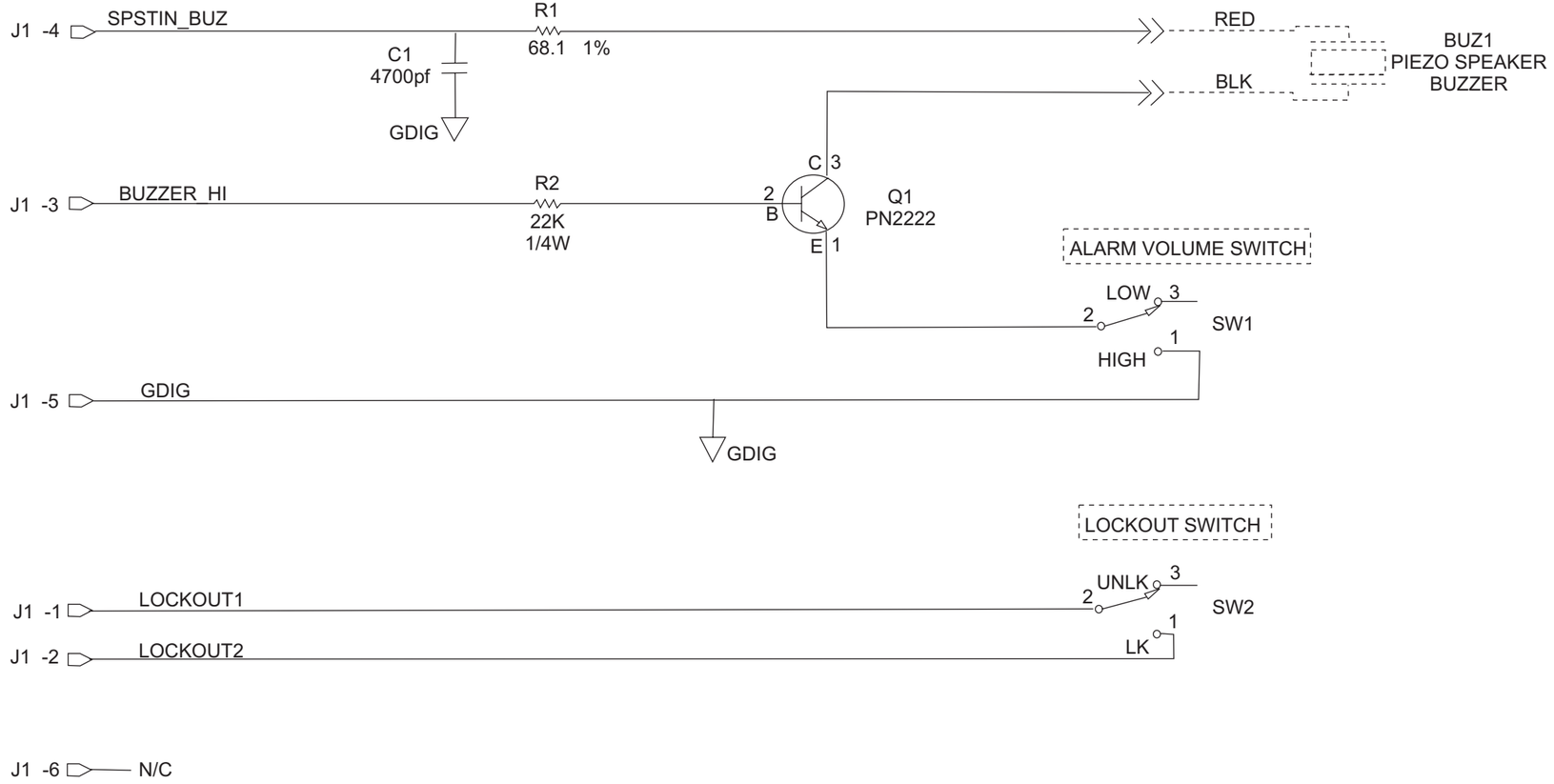

HOSPIRA, INC.	
Figure 9-28. Buzzer PWA Schematic	
DRAWING NO. 249-05903-002	Rev. B
	Sheet 1 of 1

APPENDIX

CONSIDERATIONS FOR USE IN ELECTROMAGNETIC ENVIRONMENTS

✓EN-2 L C LM D P ( ) *Electromagnetic Emissions*, *Electromagnetic Immunity*, *Electromagnetic Immunity for Life-Supporting Equipment and Systems*.

Note: D P .

ELECTROMAGNETIC EMISSIONS

Table A-1, Guidance and Manufacturer's Declaration - Electromagnetic Emissions LM

Table A-1. Guidance and Manufacturer's Declaration - Electromagnetic Emissions

Emissions Test	Compliance	Electromagnetic Enforcement - Guidance
RF Emissions CISPR 11	Group 1	The LifeCare XLM with DataPort uses RF energy only for its internal function. Therefore, its RF emissions are very low and are not likely to cause interference in nearby electronic equipment.
RF Emissions CISPR 11	Class B	The LifeCare XLM with DataPort is suitable for use in all establishments, including domestic establishments and those directly connected to the public low voltage power supply network that supplies buildings used for domestic purposes.
Harmonic emissions IEC 61000-3-2	Class B	
Voltage fluctuations/ flicker emissions IEC 61000-3-3	Complies	

ELECTROMAGNETIC IMMUNITY

Table A-2, Guidance and Manufacturer's Declaration - Electromagnetic Immunity

Table A-2. Guidance and Manufacturer's Declaration - Electromagnetic Immunity

Immunity Test	IEC 60601 Test Level	Compliance Level	Electromagnetic Environment Guidance
Electrostatic Discharge (ESD) IEC 61000-4-2	±6kV Contact ±8kV Air	±8kV Contact ±15kV Air (See Note 2)	Floors should be wood, concrete or ceramic tile. If floors are covered with synthetic material, the relative humidity should be at least 30%
Electrical Fast Transient/Burst IEC 61000-4-4	±2kV for power supply lines ±1kV for input/output lines	±2kV for power supply lines ±1kV for input/output lines	Mains power quality should be that of a typical commercial or hospital environment
Surge IEC 61000-4-5	±1kV differential mode ±2kV common mode	±1kV differential mode ±2kV common mode	
Voltage dips, short interruptions and voltage variations on power supply input lines IEC 61000-4-11	<5%U_r (>95% dip in U_r) for 0.5 cycle 40%U_r (60% dip in U_r) for 5 cycles 70%U_r (30% dip in U_r) for 25 cycles 5%U_r (>95% dip in U_r) for 5 seconds	<5%U_r (>95% dip in U_r) for 0.5 cycle 40%U_r (60% dip in U_r) for 5 cycles 70%U_r (30% dip in U_r) for 25 cycles 5%U_r (>95% dip in U_r) for 5 seconds	Mains power quality should be that of a typical commercial or hospital environment. If the user of the LifeCare XLM with DataPort requires continued operation during power mains interruptions, it is recommended that the LifeCare XLM with DataPort be powered from an uninterruptible AC Mains power supply or the battery.
Power Frequency (50/60 Hz) magnetic field IEC 61000-4-8	3A/m	400A/m (See Note 3)	Power frequency magnetic fields should be at levels characteristic of a typical location in a typical commercial or hospital environment.
Note 1: U_r is the AC Mains voltage prior to application of the test level.			
Note 2: Compliance levels tested to IEC 60601-2-24 requirements, which are more stringent than IEC 61000-4-2.			
Note 3: Compliance levels tested to IEC 60601-2-24 requirements, which are more stringent than IEC 61000-4-8.			

ELECTROMAGNETIC IMMUNITY FOR LIFE-SUPPORTING EQUIPMENT AND SYSTEMS

Table A-3, Guidance and Manufacturer's Declaration - Electromagnetic Immunity for Life-Supporting Equipment and Systems, ● , , _ ● , ● LM D _ P● _ ● , _ ● , .

Table A-3. Guidance and Manufacturer's Declaration - Electromagnetic Immunity for Life-Supporting Equipment and Systems

Immunity Test	IEC 60601 Test Level	Compliance Level	Electromagnetic Immunity-Guidance
			Portable and mobile RF communications equipment should be used no closer to any part of the LifeCare XLM with DataPort, including cables, than the recommended separation distance calculated from the equation applicable to the frequency of the transmitter.
Conducted RF IEC 61000-4-6	3 Vrms 150 kHz to 80 MHz outside ISM bands	$[V_1]$ V	Recommended separation distance $d = \left[\frac{3,5}{V_1}\right]\sqrt{P}$
	10 Vrms 150 kHz to 80 MHz in ISM bands	$[V_2]$ V	$d = \left[\frac{12}{V_2}\right]\sqrt{P}$

RECOMMENDED SEPARATION DISTANCES FOR COMMUNICATIONS EQUIPMENT

L C LM D P F

Table A-4, Recommended Separation Distances Between Portable and Mobile RF Communications Equipment and the LifeCare XLM with DataPort

L C LM D P L C LM D P

Table A-4. Recommended Separation Distances Between Portable and Mobile RF Communications Equipment and the LifeCare XLM with DataPort

Rated Maximum Output Power of Transmitter (Watts)	Separation Distance According to Frequency of Transmitter (Meters)			
	150 kHz to 80 MHZ outside ISM bands $d = \left[\frac{3,5}{V_1}\right]\sqrt{P}$	150 kHz to 80 MHz in ISM bands $d = \left[\frac{12}{V_2}\right]\sqrt{P}$	80 Mhz to 800 MHz $d = \left[\frac{12}{E_1}\right]\sqrt{P}$	800 MHz to 2.5 GHz $d = \left[\frac{23}{E_1}\right] P$
0.01	0.035	0.12	0.12	0.23
0.1	0.11	0.38	0.38	0.73
1	0.35	1.2	1.2	2.3
10	1.1	3.8	3.8	7.3
100	3.5	12	12	23
For transmitters rated at a maximum output power not listed above, the recommended separation distance *d* in meters (m) can be determined using the equation applicable to the frequency of the transmitter, where, is the maximum output power rating of the transmitter in watts (W) according to the transmitter manufacturer.				

Note: A 80MH 800 MH

Note: I M 150 H 80 MH 6.765 MH 6.695 MH ; 13.553 MH 13.567 MH ; 26.957 MH 27.283 MH ; 40.660 MH 40.700 MH .

Note: A 10/3 I M 150 H 80MH 80 MH 2.5 GH /

Note: .E

Note: $_1$=10 , $_2$=10 , E$_1$=10 /

INDEX

A

AC , 4-14
AC
(115), 7-19
(220), 7-21
AC (220), 7-22
A , 1-6
A , 7-28
A
L, 4-8
LM, 4-8
A , 6-11
A (LM), 5-9
A (L), 5-9
A , 6-1
E , 6-6
O , 6-2
, 6-11
A , 4-8
A , 1-8

B

B
C 115 , 4-4
220 , 4-6
C , 5-15
D , 7-6
D , 7-6
L , 5-10
O , 5-14
, 7-6
, 6-12
B P A, 4-14
P , 4-15
, 4-15
, 9-99
, 4-15
B P A, 4-10
L , 4-11
, 7-31
, 9-137

C

C , 4-16
D , 7-36
C , 6-13
C , 5-1
, 5-2
C , 6-13
C , 1-6
C , A-1
E , A-1
E , A-3
E , A-2
, A-5
C
C (L), 4-13
C (LM), 4-13
, 7-13
C , 1-5

D

D P /MC , 7-25
D , 5-12
D , 7-13
D
L, 4-11
LM P A-003 , 4-11
LM P A-004
, 4-11
D P A, 4-11
C , 4-13
D (L), 4-11
D (LM P A -003), 4-11
D (LM P A -004), 4-11
EL , 4-12
LED , 4-12
L , 4-12
, 7-11

, 4-12
L, 9-83
LM, 9-85
D , 5-11
D , 9-1

E

EEP OM , 4-14
E , 5-13
E , (L), 4-12
E
E , A-1
I , , A-3
I , , A-2
E , 4-2
B P A, 4-14
B P A, 4-10
D P A, 4-11
MC P A, 4-7
P P A, 4-2, 4-5
P A, 4-13
EMI , 7-22
E , 5-12
E , 5-14
E , , 5-4
E , , 7-22, 7-23
E , 6-6

F

F , 5-10
F
C , 7-10
D P A, 7-11
F , 7-12
MC / , 7-11
, 7-9
F
K , 7-12
L , 7-14
F , 7-15

G

G , 4-1
G , , 1-2

H

H , , 4-10
H , 6-1

I

I , , 5-5
I , , 9-2, 9-7
I / , 4-20
I , , 5-1
I , 1-9, 5-6
I , , 1-8
I , 1-9
, 1-9
, 1-8
I , 1-1

K

K , , 5-8
K
D , 7-13
G , 7-13
, 7-13

L

LED , (LM), 4-12
L C AC
B , 7-23
G , 7-23
H , , 7-23
, 7-23
L C D P /MC
, 7-27
L , , 4-12
L , 4-11

M

M
C , 7-32
, 7-9
M , , 5-1
B , 5-14
D P , , 5-16
N , , 5-18

P , 5-4
P , 5-14
, 5-1
MC P A, 4-7
A (L), 4-8
A (LM), 4-8
A , 4-8
M , 4-9
N (LM D P), 4-10
P , 4-9
, 7-33
(L), 9-39
(LM D P), 9-47
, LM, 9-43
, 4-7
A (LM D), 4-9
, 4-7
MC / , 7-31
MC / , 7-11
M , 4-16
C , 4-16
M , 4-18
M , 4-18
I / , 4-20
M , 4-19
P , 4-20
P / , 4-19
, 7-35
M , 7-36
M , 4-19
M , 4-9

N

N (LM D P), 4-10
N , 5-18

O

O , 5-9
O , 7-41
O , 6-2
O , 4-14

P

P (LM D P), 6-12
C , 6-13
C , 6-13
ID, 6-13
P , 5-4
A (LM), 5-9
A (L), 5-9
B , 5-10
D , 5-12
D , 5-11
E , 5-13
E / , 5-12
E , 5-14
E , 5-4
F , 5-10
I , 5-5
I , 5-6
K , 5-8
O , 5-9
P , 5-10
, 5-7
, 5-6
P , 5-14
P
C , 4-9
F , 4-15
, 9-107
P L , 9-37
P , 4-20
P
B , 7-28
E , 7-28
, 7-30
/ ,
, 7-30
P P A
115 , 4-2
220 , 4-5
L D , 9-109
L I , 9-113
LM D , 9-117
LM I , 9-121
LM D P , 9-129
P P A , 7-17
P P A,
B , 4-4, 4-6
, 4-2, 4-5
, 4-3, 4-6
P / , 4-13
P / , 4-19
P ,
I , 1-8
, 6-14
P , 5-10

115 , 4-2
220 , 4-5
, 3-1

T

, 6-1
, 5-6

A (L), 5-9
A (LM), 5-9
B , 5-15
B , 5-10
D P , 5-16
D , 5-12
D , 5-11
E , 5-13
E , 5-12
F , 5-10
K , 5-8
N , 5-18
O , 5-9
P , 5-4
P , 5-10
, 1-9, 5-7
, 4-1
E , 4-2
G , 4-1
M , 4-16
, 4-15
, 6-1
A , 6-1
P , 6-14
, 6-1

U

A /
, 4-9
, 1-8
, 1-7

V

, 7-19
, 4-14
115 , 4-3
220 , 4-6

W

, 2-1
, 4-7

F[illegible] H[illegible] O[illegible].

1-800-241-4002

F[illegible] : **www.hospira.com**

[illegible] :

Hospira, Inc.
Technical Support Operations
755 Jarvis Drive
Morgan Hill, California 95037

F[illegible] H[illegible].

CAUTION: Federal (USA) law restricts this device to sale by or on the order of a physician or other licensed practitioner.

WARNING: POSSIBLE EXPLOSION HAZARD EXISTS IF THE COMPUTER IS USED IN THE PRESENCE OF FLAMMABLE ANESTHETICS.

PA EN
C[illegible] : 5,277,191; 5,261,411; 5,285,796; 5,217,019; 5,341,476

[illegible] II, M[illegible]-K[illegible], C[illegible] HB, D[illegible], P[illegible], F[illegible] C, [illegible], F[illegible], F[illegible] B[illegible] H[illegible], I[illegible].

Type CF

IPX1

C[illegible] 1

CE 0050

UL2601
CSA 601
NRTL/C US

E[illegible]

D[illegible] P[illegible] M[illegible] E[illegible]

M[illegible]

A[illegible] :
H[illegible]
D[illegible]
C[illegible]. D[illegible], I[illegible]

C[illegible] A[illegible] C[illegible] A[illegible] N[illegible] L/C[illegible] C[illegible] A[illegible] C[illegible] A[illegible] C[illegible] C[illegible] A[illegible] O[illegible] H[illegible] A[illegible] (O[illegible] HA), [illegible] N[illegible] L[illegible] (N[illegible] L).

Printed in USA
Hospira, Inc. ☐ Lake Forest ☐ Illinois 60045 USA