LABCONCO 1000

GUARDIAN DIGITAL MONITOR

Operating and Instruction Manual

Model: Guardian 1000 / 1

- Digital display
- 3 Relay inputs
- 3 Relay outputs
- Com port

Used for alarm indication and monitoring on Fume Hoods

04/01/13

OPERATOR DISPLAY PANEL

Note :- Access to the Calibration and Configuration menus is password protected and is factory set. To access and or change the password contact the supplier for the Engineers Password and enter the Passwords in the Main Menu or alternatively use a Laptop connected to the Com port and the Upload/Download software provided

Connection details :-

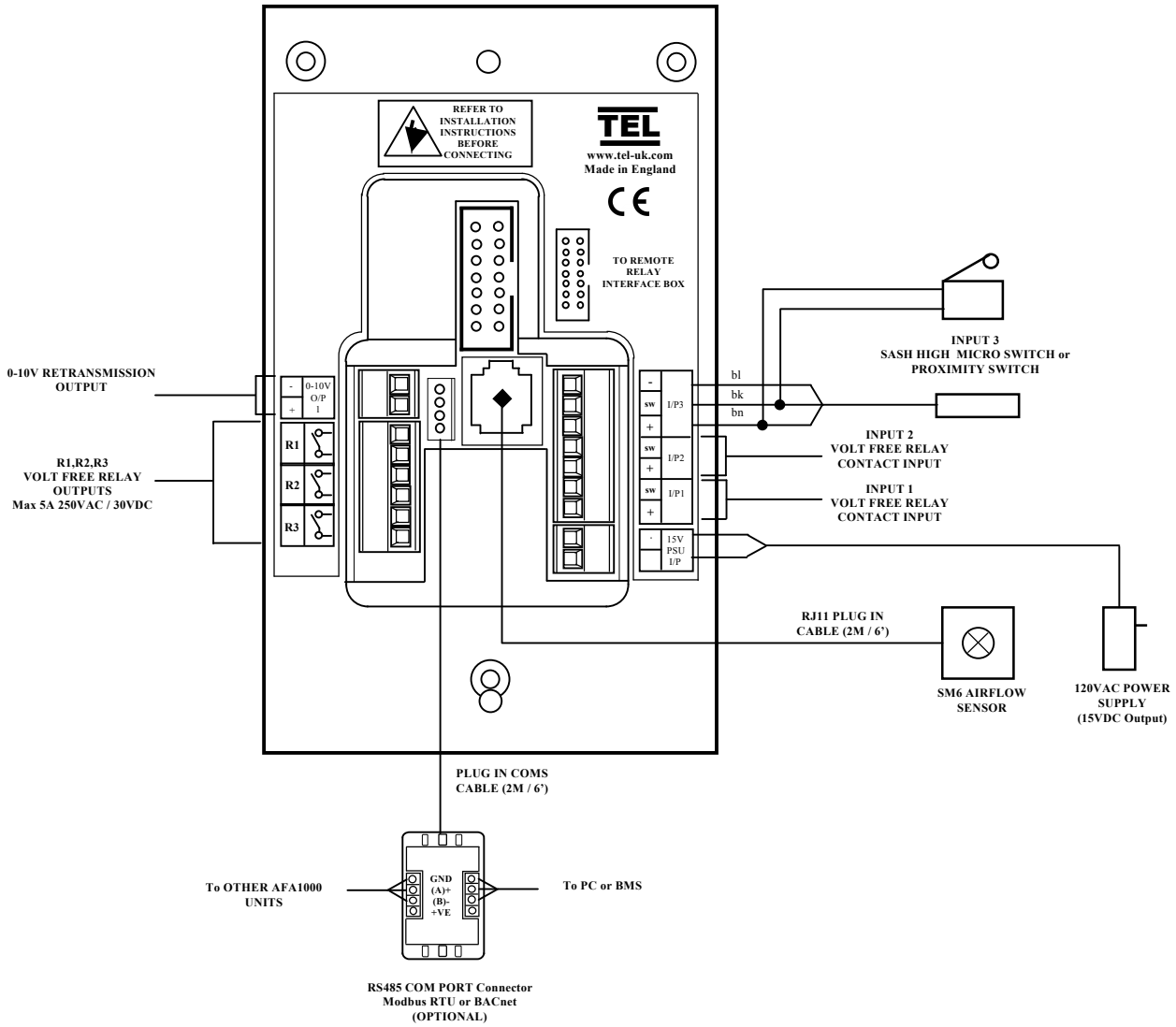

Notes :-

1. The Remote Interface Box is an optional extra. This is supplied complete with a 2m long ribbon cable with IDC plugs. The box is designed to allow termination of external cables rated at 220V and includes the following connection points :-
   3 – Input connections – Input 1 , Input 2 , Input 3
   3 - Relay outputs - Output relays R1 , R2 , R3

2. Output 1 is an output giving a 0 –10 V DC signal proportional to the Fume Hood face velocity over the range of 0 – 200 fpm

3. BACnet and Modbus RTU included (optional terminal box required for connection to the monitor).

1.1 General Description

All systems comprise of the following components :-

1 – SM6 Airflow Sensor,
1 – AFA1000 /1 Alarm unit,
1 – AC power supply

If the Sash Alarm System option is included there will also be a sash micro switch or proximity switch.

Operator Features --- the alarm has the following operator features :-

Digital Display

The digital display is a back-lit, full graphic unit with a visual display of approx 56 x 27 mm.
The display operates through the software allowing the generation of figures, wording and Icons.

The display shows the fume cupboard face velocity in **m/sec** or **fpm** when enabled or the alternative with no velocity reading but showing **AIR FAIL / AIR SAFE** as continuous display.
All of the above are configurable via the alarm key pad.

An ‘ **event time line** ’ segmented into 20 x 3 minute segments will scroll across the display (when enabled) .This takes the form of a graphical ‘ blip’ that will progress from the right hand side to the left hand side – representing events that have occurred during the past hour. On the standard alarm this will be limited to airflow alarms but other alarms are available.
Using the diagnostics software and an associated computer via the **com port** on the alarm the event data can be transferred to a data logger.
The alternative to the event time line is a dynamic ‘ **bar graph** ’ representing the face velocity

The display shows a **Horn** icon (with line through it) when the audible alarm is in the Muted condition

Sash High – will be displayed when the Sash alarm is enabled and the sash is raised above the max safe working opening.
This display will alternate on/off with the velocity reading.

Ext Alarm – will be displayed when the external alarm input is activated (when enabled)
This display will alternate on/off with the velocity reading

Air Fail - will be displayed if the airflow is less than the Low air alarm point.
This display will alternate on/off with the velocity reading

High Air - will be displayed if the airflow is more than the High air alarm point.
This display will alternate on/off with the velocity reading

Set-back - will be displayed if the night set-back function is activated (when enabled)
This display will alternate on/off with the velocity reading

Disabled - will be displayed if the alarm disable function is activated (when enabled) This display will alternate on/off with the velocity reading

Close Sash - will be displayed if the sash is raised and the user is not present (when enabled) This display will alternate on/off with the velocity reading

Additional features:

Mains Fail - will be displayed if the power fails to the monitor (when enabled)
*Note – this is an optional extra feature that requires an additional battery unit

Low Temp - will be displayed if the hood temperature drops below the low temp alarm point (when enabled) This display will alternate on/off with the velocity reading
*Note – this is an optional extra feature that requires an additional temperature sensor

High Temp - will be displayed if the hood temperature rises above the high temp alarm point. (when enabled) This display will alternate on/off with the velocity reading
*Note – this is an optional extra feature that requires an additional temperature sensor

LED Indicators ---- the alarm unit has three LED indicators :-

Red -- Alarm
Amber -- Caution
Green -- Safe

Audible Alarm sounder -- the alarm has an audible alarm sounder with local or remote Mute facility

Enter --- the alarm has an Enter button -- this is multi-functional as follows :-

Press **Enter** momentarily when alarm is sounding will mute the alarm

Press **Enter** for 5 secs will gain access to **Calibration** and **Configuration** menus (both menus password protected)

+ / - -- the alarm has + / - buttons that can be used to scroll through the calibration and configuration menu or to select options or values

External Connections -- the alarm unit will have the following connection points :-

Input 1 --- volt free relay input configurable for normally closed or normally open relays

This input can be configured as :-

Alarm disable
Night set-back
External alarm
Sash High
Mains Fail
Sash Warning
High / Low
Temperature

Input 2 --- volt free relay input configurable for normally closed or normally open relays

This input can be configured as :-

Alarm disable
Night set-back
External alarm
Sash High
Mains Fail
Sash Warning
High / Low
Temperature

Input 3 --- volt free relay input configurable for normally closed or normally open relays

This input can be configured as :-

Alarm disable
Night set-back
External alarm
Sash High
Mains Fail
Sash Warning
High / Low
Temperature

Output 1 --- volt free relay output configurable as normally closed or normally open relays.

Output 2 --- volt free relay output configurable as normally closed or normally open relays.

Output 3 --- volt free relay output configurable as normally closed or normally open relays.

Com Port --- to enable connection to Laptop or PC for full diagnostics , logging or setting up and for communications to building computer system (BMS)

Power supply --- low voltage DC power supply

Airflow Sensor --- connection socket for the face velocity airflow sensor.

See **AFA Coms Manual** document for other specific information on Modbus RTU and BACnet options and settings.

1.2 Alarm Configuration / Calibration

The alarm can be configured via a Laptop or PC using a variety of 'set up ' programs each designed for a particular application with a combination of inputs , outputs and push buttons. This configuration can be changed via the alarm key pad using the menu system if required or re-configured by re-connection of the laptop or PC.

This allows the fume hood manufacturer to stock standard units and configure the alarms to suit the application.

The configuration of the various functions and the calibration of the alarm face velocity display is menu driven. Access to the menu will be via password (4 digit number) and will be two level. The first level will be for calibration of the unit and the second level will be for 'engineers' to set up the configuration of the alarm.

NOTE:- If you enter the Calibration or Configure Menu by accident :-
press the + & - buttons at the same time to escape back to the Main Menu

The menus and sub–menus are in ' plain language ' and incorporate brief instructions where appropriate.

See menu operation document

1.3 Start up

When unit is powered up the following sequence of events occur :-

1. The 12V DC power is applied to the airflow sensor and a delay on timer (30 sec) is initiated.
2. The alarm then performs a self test on the display and all indicators etc (approx 5 sec)

3. The display show a ' Welcome note ' – with the fume cupboard manufacturer company name (if configured) for the rest of the initial 30 sec delay time. During this time the airflow sensor is stabilising

4. During the whole of the 30 sec period all alarms and relay outputs are inhibited.

5. At the end of the 30 sec delay the unit performs one of two options :-

   a. If the alarm calibration has been previously completed – the unit goes to normal operating mode (Run)

   b. If the unit has not been calibrated the unit displays
   ' Unit requires Set up -- press Enter to access Set up menu '
   The set up menu allows calibration or configuration via the password protection

During the set-up all alarms and output relays are inhibited.

1.4 Events / actions

Safe airflow

- Meter reading above warning level (e.g. > 90fpm)
- Green LED on

Warning airflow

- Meter reads between warning level and air fail level (e.g. > 80fpm and < 90fpm)
- Amber LED on

Low airflow

- Meter reads below alarm level for longer than the warning to low air delay time
- AIR FAIL toggles on / off with display
- Red LED on (Flashing)
- Audible alarm sounds -- can be muted via Enter pushbutton
- Low air relay operates (if configured)

Reset : -- when airflow rises 4fpm above Low air level for longer than the low air to warning air delay time the Low air alarm resets automatically

High airflow
If configured :-

- High Air toggles on / off with display
- Audible alarm sounds – can be muted via Enter pushbutton)
- High air relay operates (if configured)

Audible alarm Mute

- When the audible alarm is muted via the Enter button - an Icon (horn with forward slash) is shown on the display.

Sash High

- When the input configured as Sash High is activated
- Amber LED on
- Sash High – toggles on / off with velocity display

- Audible alarm sounds
- Audible can be muted via Enter pushbutton -- this silences the alarm and initiates a repeat timer (if configured). After the delay time the alarm re-sounds (and can be re-muted). During this time the Amber LED flashes on / off.
- Sash High relay operates (if configured)

Reset when Sash lowered to safe position and input de-activated.

High / Low

- When input configured as High/Low is activated
- Display Icon shows High or Low
- High / Low relay operates (if configured)

This function is designed for two speed fan operation or two position damper operation switched via a micro switch or proximity switch activated at a given position on the sash.

Night set-back

- When input configured as Night set-back is activated
- Night set-back Icon is displayed
- Red LED on (Flashing)
- Reduced Low air alarm (if configured)
- Audible alarm muted
- Mute Icon shown on display

External alarm

- When input configured as External alarm is activated
- Red LED on (Flashing) – (if configured)
- External Alarm toggles on /off with display -- (if configured)
- Audible alarm sounds – can be muted via Enter pushbutton
- External alarm relay operates (if configured)

Alarm disable

- When input configured as Alarm disable is activated
- Alarm disabled is displayed
- Red LED on (Flashing)
- Audible alarm muted
- Mute Icon shown on display

Close Sash

- When input configured as Close Sash is activated
- Red LED on
- Close Sash toggles on /off with display
- Audible alarm sounds (after pre-set time)
- Audible can be muted via Enter pushbutton -- this silences the alarm if configured.

Mains Fail (Optional)

- When the input configured as Mains Fail is activated
- Red LED on
- **Mains Fail** is displayed
- Audible alarm sounds
- Audible can be muted via Enter pushbutton -- this silences the alarm if configured.

Reset when Mains power is provided to monitor

Temperature (Optional)

- When input configured as Temperature is activated (and temp sensor connected)
- Temperature and Airflow displayed – Temp display can be disabled.
- High Temp toggles with Airflow display - Red LED on (Constant) with Audible alarm
- Low Temp toggles with Airflow display - Red LED on (Constant) with Audible alarm

2.1 Quick Start Installation

Follow the instructions below for installing and commissioning the unit. :-

1. The Fume Hood comes prepared to accept the Digital 1000 airflow alarm system.

2. First, remove the front panel by lifting it straight up and out away from the hood.

3. Next, remove the cover plate located at the top of the right corner post.

4. Install the monitor to the upper right corner post using the two screws that came with your kit. See figure 1.

5. The connection of the air sensor, adaptor and hose will follow next.

    a. Connect one end of the supplies sidewall adaptor with nut included in your kit by removing the uppermost plastic plug from the ½" hole in the sidewall of the hood and replacing it with the adaptor and nut. The nut is located inside the fume hood. See figure 2.
    b. Cut 1.5" of the white hose (1.0" OD x .79" ID) supplied with your monitor. Connect one end of the hose to the sidewall adaptor. See Figure 2.
    c. Connect the square air sensor to the other end of the white hose and be sure to connect the sensor cable from the air sensor to the back of the monitor. This completes the airway connection per Figure 2.

6. In your kit you will find an electrical cover plate and snap-in electrical outlet. Snap the outlet in place making sure the outlet is secure.

7. Next, remove and discard the electrical cover plate that is on the junction box at the top of your hood.

8. Wire in the cover plate that you just prepared to the existing wires inside of the hood junction box per the wiring diagram on top of the fume hood. ***WARNING: make sure that the power is disconnected to your hood prior to connecting the new cover plate.***

9. Secure the cover plate to the junction box with the existing screw.

10. Plug the output cord of the power supply to the back of the monitor and plug the power supply into the outlet on the cover plate of the junction box.

11. Replace the front panel and calibrate your unit according to the following instructions – step 2.1. For additional calibration guidelines follow the steps listed in section 2.4

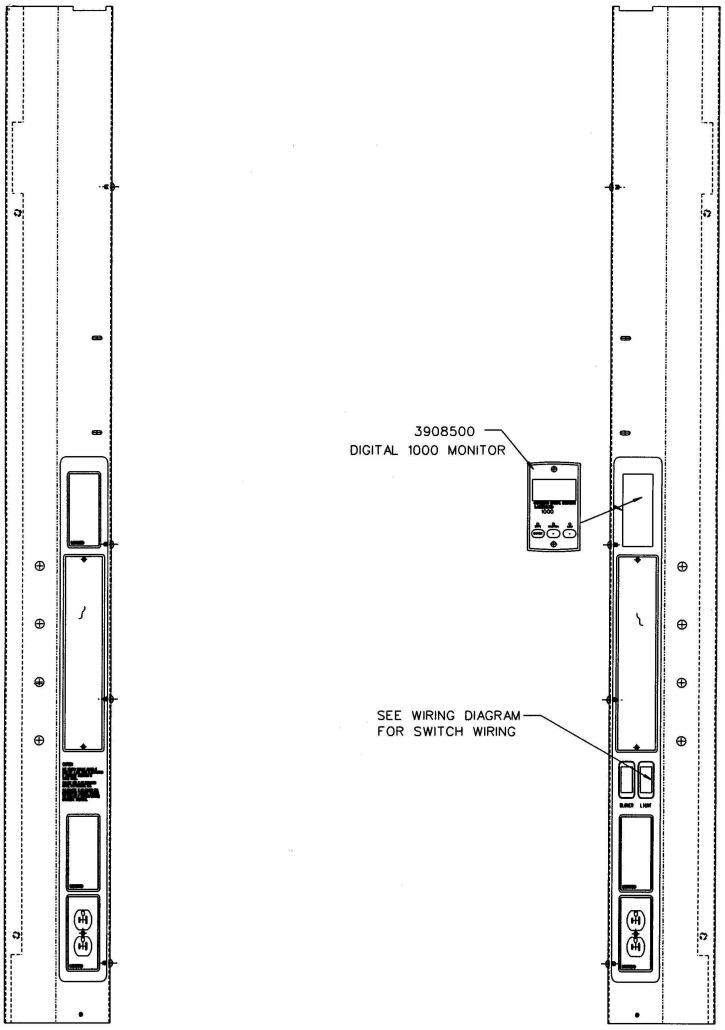
3908500
DIGITAL 1000 MONITOR
SEE WIRING DIAGRAM
FOR SWITCH WIRING

Figure 1

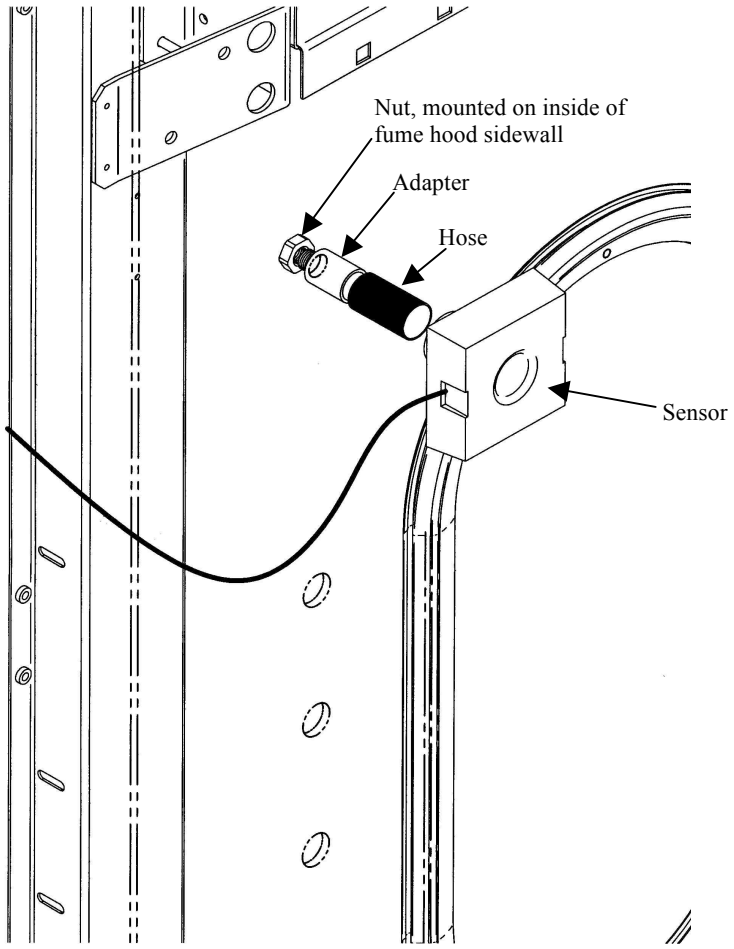
Nut, mounted on inside of
fume hood sidewall
Adapter
Hose
Sensor

Figure 2

2.2 Calibration :-

1. Power up the unit and wait at least 30 secs while the sensor temperature stabilises.

2. If the unit has not been calibrated the unit will display ‘ Requires setup ’ – press ENTER to continue and in the Main Menu use the +/- buttons on the alarm facia select ‘ SETUP ‘ and then press the ENTER button.

3. In the Setup Menu select ‘CALIBRATION’ and press the ENTER button

4. At this stage you will be requested to enter the PASSWORD. Use the +/- buttons to select the individual digits in turn and then press ENTER.
   If the password is correct the unit will go to the calibration mode. If the password is not correct you will be requested to try again --- on the third wrong password entry the calibration menu will lock out for 10 mins

5. When in the calibration mode follow the instructions on the display screen to carry out the calibration of the unit. See ‘Calibration Notes’ below for hints on successful calibration.
   When the calibration is complete the unit will return to the Main Menu.

6. Use the +/- buttons on the alarm facia select ‘ RUN ’ and then press the ENTER button.

   The unit will now function and display the measured Fume Hood face velocity

2.3 Calibration Notes :-

1. When using a standard Fume Hoods with Vertical Sliding sashes open the sash to the normal max safe working height for the Low Air sample.

2. For the Higher Air sample close the sash to approx 50% of the opening used for the Lower Air sample. If the Higher air sample value is too close to the Lower Air sample the alarm will detect this and ask you to repeat with a higher value. To do this close the sash a little more and repeat the sample. Avoid closing the sash below 100mm/4 inches.

3. The face velocity readings on the open sash may vary at different points on the measuring grid by up to 20fpm. This is quite acceptable in terms of the fume cupboard performance so long as no individual point is below the designated Low Air alarm point .The figure entered for the calibration point can be taken as the average value of all the measuring grid readings or could be taken as the individual lowest point on the grid. For most fume

hoods this low point is on the bottom row in the centre and is a convenient position to measure and for future reference when checking the alarm during annual maintenance.

4. Take time when measuring the face velocities for the calibration procedure to allow for the velocities across the open sash to stabilise. If the velocities are changing or are turbulent during the sampling period the alarm will detect this and ask you to repeat the sample.

5. When using a Fume Hood with Horizontal Sliding sashes open the sashes to the normal max safe working opening for the Low Air sample.

6. When calibrating or re-calibrating the alarm it is important to ensure that the Adapter and hose is connected to the SM6 sensor on the fume hood as per figure 2. If the Adapter and hose is not connected the sensor will not 'see' a change in the airflow during the calibration procedure and when switched to the Run condition the display will show a fixed reading that will not change when the fume cupboard velocity changes. This only applies during the calibration mode. If in normal running after successful calibration the vent kit becomes disconnected the air flow across the sensor will fall and the alarm will go into the AIR FAIL condition.

2.4 Calibration Guidelines :-

1. Calibrate the airflow monitor according to the instructions in set 2.1. To successfully calibrate the monitor, it will be necessary to change the face velocity by moving the sash position. Typical calibration conditions are set to face velocity air sample differences of at least 20 feet per minute. The airflow monitor is factory set to be calibrated with a difference of at least 50 fpm and can be changed by changing the "lower/higher air sample difference". The following suggested in flow face velocity speeds are recommended to successfully calibrate. Typical low air alarms are set 10-20 fpm below operation speeds. Follow step 2 below.

Low Air Alarm Set Point	Hood Operating in Flow Speed	Low Calibration Set Point	High Calibration Set Point
40 – 50 fpm	60 fpm	40 – 60 fpm	100 – 120 fpm
60 – 70 fpm	80 fpm	50 – 90 fpm	100 – 150 fpm
80 – 90 fpm	100 fpm	50 - 110 fpm	100 – 170 fpm

1. Go to SETUP and then CONFIGURE, then go to CAL CONFIG MENU and change the "lower/higher air sample difference" to 20 fpm. This will allow you to successfully calibrate with values of a minimum of 20 fpm difference.
2. While in CAL CONFIG MENU, change the "sensor difference" from 10% to 3%.
3. While in CAL CONFIG MENU, adjust the red low air alarm to the desired setting such as 60 fpm. Then adjust the yellow "CAUTION or WARNING" to 63 fpm. Then adjust the "CAUTION or WARNING" air reset to 3 fpm. This sets the alarm condition and can be altered as desired.
4. To complete the CAL CONFIGURATION, be sure to enter "DONE".
5. To start the calibration mode, use the Labconco 1000 Manual and enter "CALIBRATION" mode on the display from the SETUP menu.
6. Follow the instructions on the display and alter the low face velocity by altering the sash position to its most open position. Measure the average face velocity and enter the low value on the display. Be careful not to block the opening. The low exhaust velocity calibration will take about 5 seconds.
7. Now alter the high exhaust velocity by altering the sash position to a lower open position. Measure the average face velocity and enter the high value on the display. The high value must be at least 20 fpm greater than the low value. The high exhaust velocity calibration will take about 5 seconds.
8. Be sure to enter "DONE" after successfully completing the low and high calibration set points.
9. Once calibration is completed go to "RUN" and hit "ENTER". The value should read close to the high calibration set point where the sash was left in its last position.
10. Recheck the face velocity with an anemometer to confirm the display on the digital airflow monitor at various sash positions.

3.0 Monitor Configuration :-

The Airflow monitor menu contains a parameter group called " Cal Configure" that contains all of the parameter settings that may need to be adjusted to complete a successful calibration. The following list shows the parameters and their functions. Refer to the full parameter list in section 6.0 to see the default factory settings.

To access the Cal config menu – (From Run screen) Press Enter for 5 secs/Setup/Configure/Password (000)/Cal Config.

1. **Display Units** – Face velocity display units – **fpm** or **m/sec**.

2. **Low Air Alarm** – Sets the low air alarm velocity value – typically 70-80% of the design velocity.

3. **Low Air Cut Off** - When enabled inhibits the face velocity reading from being displayed below the selected value – for example, Low Air Cut Off enabled and set to 30fpm, the display will stop reading velocity below 30fpm. This function is useful in situations where the hood blower is switched off and there is still a flow through the hood either from positive room pressurization or from other influences and the monitor is not required to display velocity. Typically set to a low value e.g. 30 fpm.

4. **Warning Air Alarm –** Sets the warning air alarm velocity value – typically 80-90% of the design velocity.

   Warning Air Reset – Sets the reset differential value – this is the value that the monitor resets into Air Safe above the Air Fail alarm point on rising airflow.

5. **High Air Alarm** – Enables and sets the high air alarm velocity value – typically not used.

6. **Low Air Fluctuations** – This parameter monitors the fluctuations in airflow during the low air calibration point. The monitor samples the airflow for 5 seconds and averages the airflow readings, if any of the fluctuations different from the average by more than the parameter value the calibration will be stopped and a "Fluctuations too high" message will be shown with option of retry or cancel calibration.

7. **High Air Fluctuations** – This parameter monitors the fluctuations in airflow during the second air calibration point. The monitor samples the airflow for 5 seconds and averages the airflow readings, if any of the fluctuations different from the average by more than the parameter value the calibration will be stopped and a "Fluctuations too high" message will be shown with option of retry or cancel calibration.

8. **Low High Diff –** This parameter sets the difference required between airflow samples during calibration. If the value entered during the second calibration point too low a "Low High Diff too low" message will appear and the calibration will be stopped.

9. **Warning - Alarm Time** – This parameter sets a time delay for the Low Air alarm to activate once the Low Air alarm point have been reached. This is to stop the airflow from dropping in and out of Low Air Alarm if the airflow is turbulent and is close to the low air alarm point value.

10. **Alarm – Warning Time** – This parameter sets a time delay for the air to reset to Air Safe once the Warning air point have been reached. This is to stop the airflow from dropping in and out of Low Air Alarm if the airflow is turbulent and is close to the low air alarm point value.

11. **Show Air Flow** – This parameter enables / disables the face velocity reading on the display. When disabled the monitor will show ether "Air Safe" or Air Fail".

12. **Show Time Line** – This parameter enables / disables the time line. When disabled the velocity bar graph (0-200fpm) is shown at the top of the display window. When enabled a time line showing the airflow alarm condition for the previous 60 mins will be shown at the top of the display window.

13. **Audible Alarm** – This parameter enables / disables the audible alarm. When disabled the audible alarm will not sound in any alarm condition.

14. **Sensor Difference** – This parameter looks at the actual change on the sensor output between the 2 cal points to make sure that the sensor sees enough change to allow the calibration. If the monitor does not see enough change a "Sensor diff too low – Check sensor" message will appear. This value can be lowered and then the monitor can be recalibrated. This parameter is useful to ensure that the hose has been connected.

15. **Sensitivity** – This parameter reduces the scale of the monitor so that the change in sensor output has a lesser effect on the change in the airflow display. Reducing the sensitivity will reduce the airflow reading at higher airflows so should only be done in small adjustments – typically 5%.

Dimensions

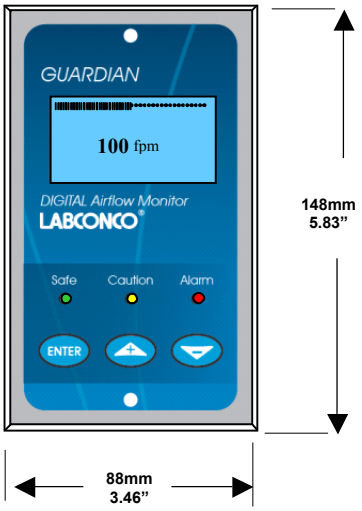

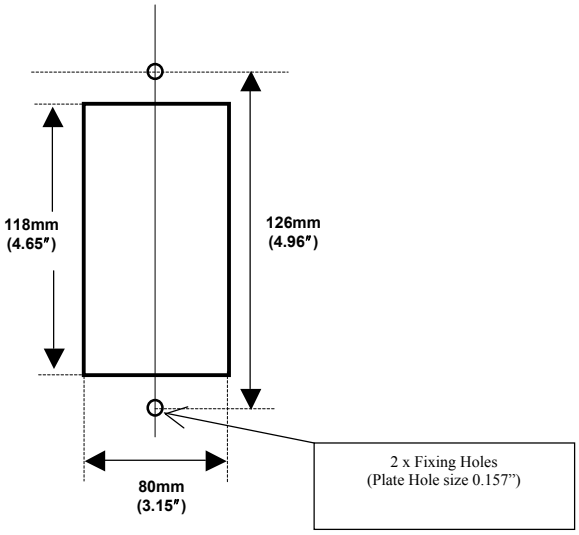

Panel Cutout Dimensions

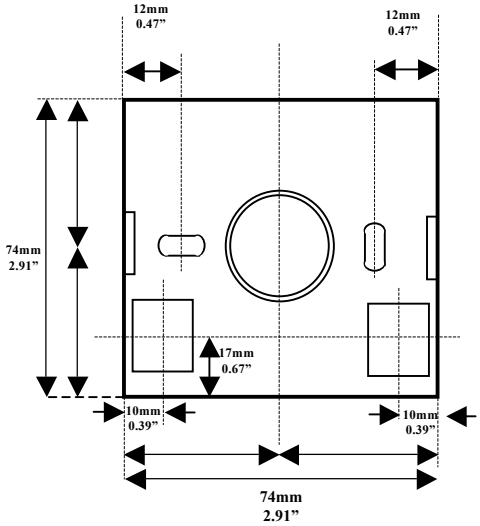

SM6 Sensor Dimensions (Rear view)

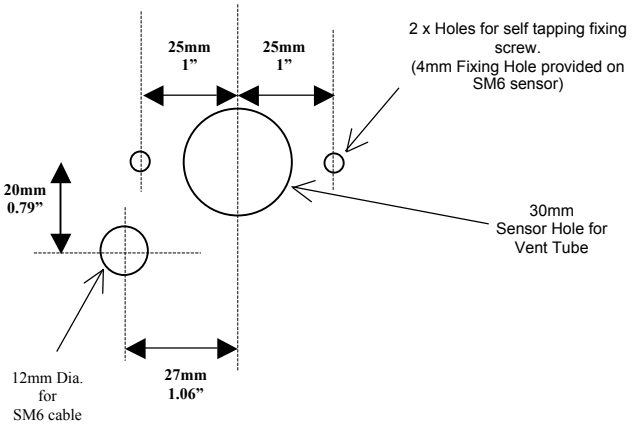

SM6 Sensor Panel Cutout Dimensions (Front view)

NOT TO SCALE

5.0 Typical Wiring Diagram --- (Alarm only)

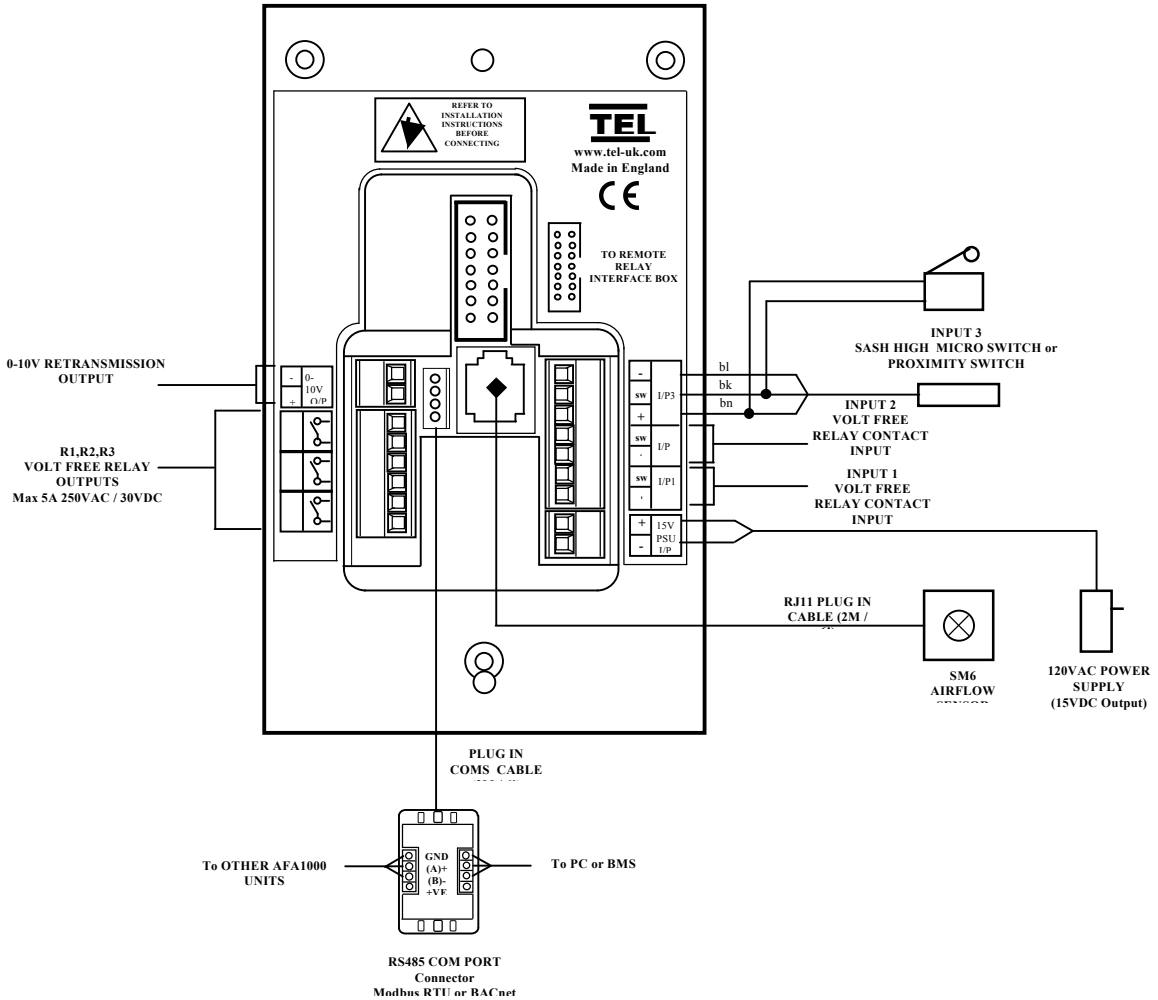

Notes :

Output 1 is an output giving a 0 –10 V DC signal proportional to the Fume Hood face velocity over the range of 0 – 200 fpm.

BACnet and Modbus RTU coms are included – an optional terminal box is required for connection to the monitor.

See **AFA Coms Manual** document for other specific information on Modbus RTU and BACnet options and settings.

5.1 Typical Wiring Diagram with Optional Temperature Sensor

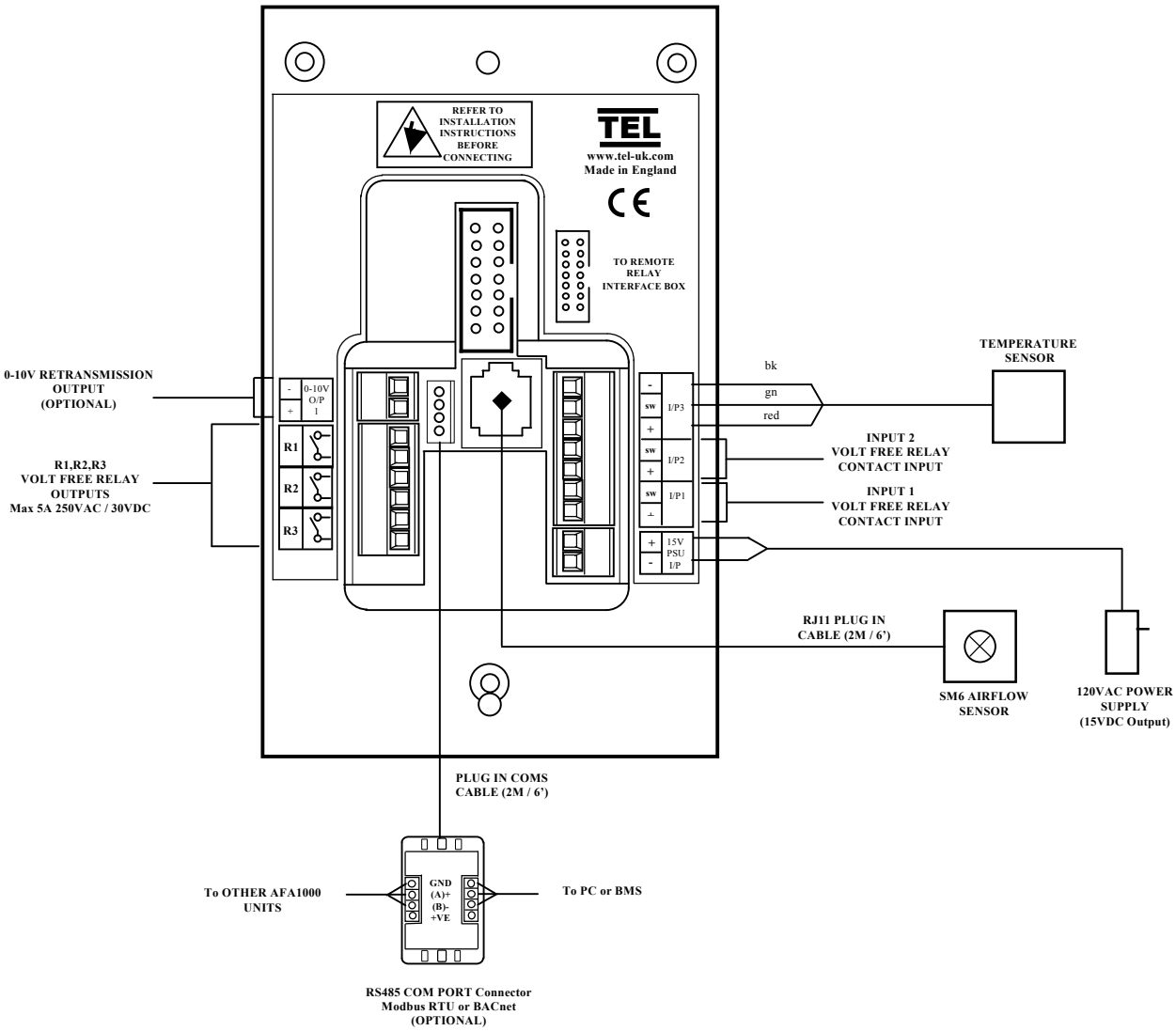

Note :

Temp Sensor **Optional**
Temp sensor connects to Input 3.
Input 3 has to be set to analogue and function set to Temperature.

5.2 Typical Wiring Diagram with Optional Relay Interface Unit

Optional **Relay Interface Unit** in ABS enclosure mounted on top of Fume Hood to allow up to external cable connections to be terminated.
Rated at 220V 5A

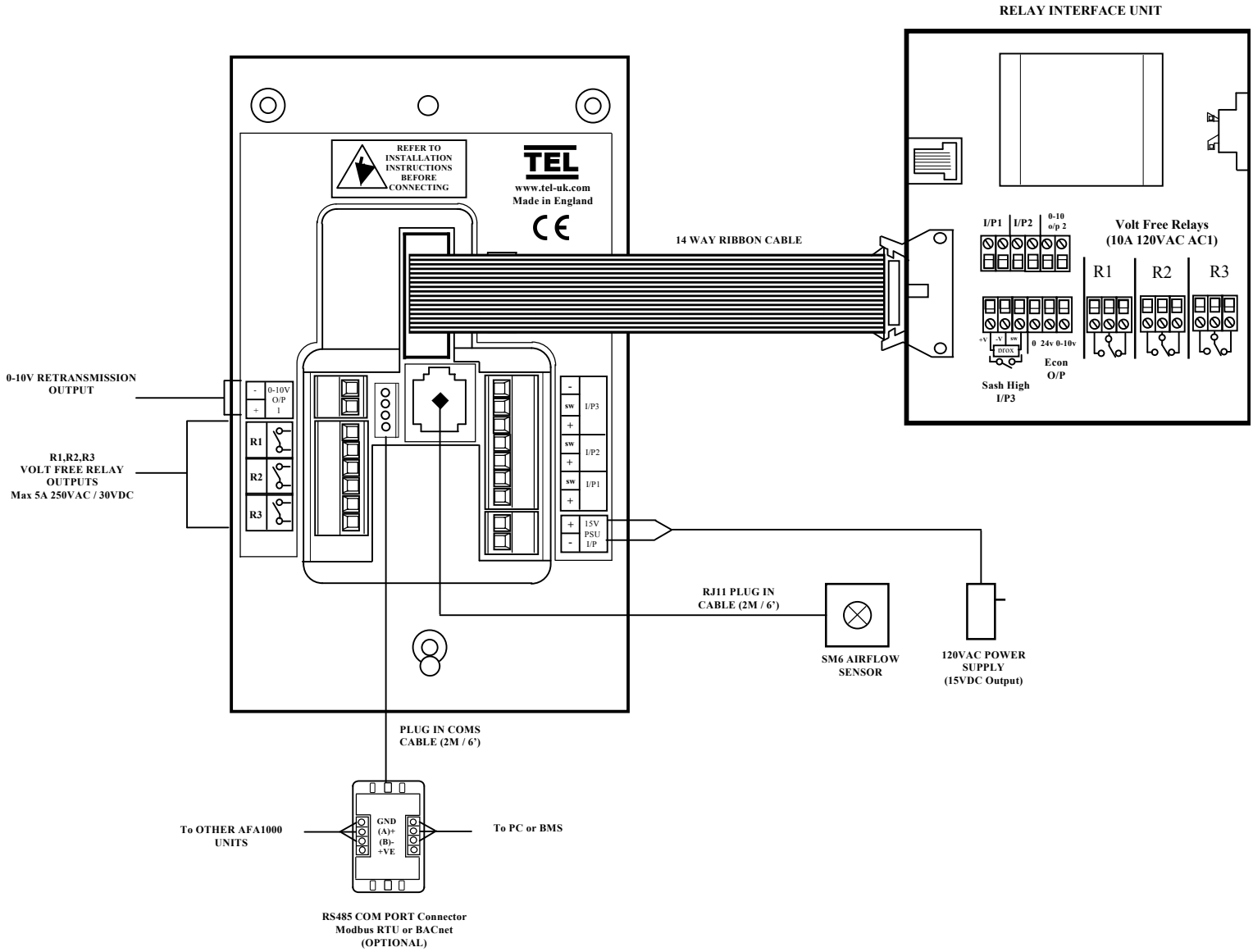

6.0 Parameter list / factory settings.

AFA10001/Mk2 Labconco

FILE NUMBER : 1.6

TYPE : AFA1000/1Mk2
CUSTOMER : Labconco

The AFA1000 monitor has been factory set to the listed parameter settings. To change any parameter setting press and hold the enter button until the "Main Menu" screen is displayed, select "Configure" to view the parameters and use the +/- and Enter buttons to change the settings.

FOR FULL INSTALLATION / CALIBRATION / CONFIGURATION DETAILS PLEASE REFER TO THECALIBRATION SECTION OF THE USER MANUAL.

FACTORY DEFAULTS

Menu	Configuration Menu: - Calibration Config	Units	Default Settings
ON	DISPLAY UNITS	M/SEC	
		FPM	FPM
ON	LOW AIR ALARM	FPM	60
		OFF	
ON	LOW AIR CUTOFF	ON	ON
ON	CUTOFF VELOCITY	FPM	30
ON	WARNING AIR ALARM	FPM	63
	ALARM TO WARNING AIR HYSTERESIS	FPM	3
ON	HIGH AIR ALARM	ENABLED	
		DISABLED	DISABLED
ON	HIGH AIR ALARM	FPM	
ON	LOWER AIR SAMPLE FLUCTUATIONS	%	5
ON	HIGHER AIR SAMPLE FLUCTUATIONS	%	10
ON	LOWER/HIGHER AIR SAMPLE DIFFERENCE	FPM	30
ON	WARN TO ALARM AIR TIME	SECONDS	30
ON	ALARM TO WARN AIR TIME	SECONDS	1
ON	SHOW AIR FLOW	ENABLED	ENABLED
		DISABLED	
ON	SHOW TIME LINE	ENABLED	
		DISABLED = SHOW BAR GRAPH	DISABLED
ON	AUDIBLE ALARM	ENABLED	ENABLED
		NOT ENABLED	
ON	SENSOR DIFFERENCE	%	10
ON	SENSITIVITY	%	100
	Configuration Menu		

OFF	TEMPERATURE*	TEMP UNITS – oC / oF	C
	(*Requires optional Temp sensor)	LOW TEMP ALARM	0.0 C
		HIGH TEMP ALARM	50.0 C
		SHOW TEMP – Enabled/Disabled	DISABLED
ON	INPUT 1	NOT ACTIVE	
		ACTIVE ON CLOSING CONTACT	ACTIVE ON CLOSING CONTACT
		ACTIVE ON OPENING CONTACT	
		ANALOGUE	
ON	INPUT 1 – FUNCTION	NONE	
		ALARM DISABLE	
		NIGHT SET-BACK	NIGHT SET-BACK
		EXTERNAL ALARM	
		SASH HIGH	
		HIGH / LOW	
		SASH WARNING	
		TEMPERATURE	
ON	INPUT 2	NOT ACTIVE	NOT ACTIVE
		ACTIVE ON CLOSING CONTACT	
		ACTIVE ON OPENING CONTACT	
		ANALOGUE	
ON	INPUT 2 - FUNCTION	NONE	NONE
		ALARM DISABLE	
		NIGHT SET-BACK	
		EXTERNAL ALARM	
		SASH HIGH	
		HIGH/LOW	
		SASH WARNING	
		TEMPERATURE	
ON	INPUT 3	NOT ACTIVE	
		ACTIVE ON CLOSING CONTACT	ACTIVE ON CLOSING CONTACT
		ACTIVE ON OPENING CONTACT	
		ANALOGUE	
ON	INPUT 3 - FUNCTION	NONE	
		ALARM DISABLE	
		NIGHT SET-BACK	
		EXTERNAL ALARM	
		SASH HIGH	SASH HIGH
		HIGH/LOW	
		SASH WARNING	
		TEMPERATURE	
ON	OUTPUT RELAY 1 ACTIVATION	CONTACT CLOSES ON ACTIVATION	Contact closes on activation
		CONTACT OPENS ON ACTIVATION	
ON	OUTPUT RELAY 2 ACTIVATION	CONTACT CLOSES ON ACTIVATION	Contact closes on activation
		CONTACT OPENS ON ACTIVATION	
ON	OUTPUT RELAY 3 ACTIVATION	CONTACT CLOSES ON ACTIVATION	Contact closes on activation

		CONTACT OPENS ON ACTIVATION	
ON	LOW AIR ALARM - RELAY	NONE	
		OUTPUT RELAY 1	RELAY 1
		OUTPUT RELAY 2	
		OUTPUT RELAY 3	
ON	DISABLE ALARM - RELAY	NONE	NONE
		OUTPUT RELAY 1	
		OUTPUT RELAY 2	
		OUTPUT RELAY 3	
ON	SASH HIGH REPEAT TIMER	ON	ON
		OFF	
ON	SASH REPEAT TIME	MIN	5
ON	SASH HIGH RELAY	NONE	NONE
		OUTPUT RELAY 1	
		OUTPUT RELAY 2	
		OUTPUT RELAY 3	
ON	HIGH / LOW RELAY	NONE	NONE
		OUTPUT RELAY 1	
		OUTPUT RELAY 2	
		OUTPUT RELAY 3	
ON	NIGHT SET-BACK	MAINTAIN LOW AIR ALARM	Maintain Low Air alarm
		REDUCE LOW AIR ALARM	
ON	NIGHT SET BACK REDUCED ALARM	FPM	49
ON	NIGHT SET-BACK RELAY	NONE	NONE
		OUTPUT RELAY 1	
		OUTPUT RELAY 2	
		OUTPUT RELAY 3	
ON	EXTERNAL ALARM - LED	ON	
		OFF	OFF
ON	EXTERNAL ALARM - DISPLAY ICON	ON	
		OFF	OFF
ON	EXTERNAL ALARM - RELAY	NONE	NONE
		OUTPUT RELAY 1	
		OUTPUT RELAY 2	
		OUTPUT RELAY 3	
OFF	LOW TEMP RELAY	NONE	NONE
		OUTPUT RELAY 1	
		OUTPUT RELAY 2	
		OUTPUT RELAY 3	
OFF	HIGH TEMP RELAY	NONE	NONE
		OUTPUT RELAY 1	
		OUTPUT RELAY 2	
		OUTPUT RELAY 3	
ON	SENSOR ERROR OPTIONS	SOUNDER ON	ON
		SOUNDER OFF	
	SENSOR ERROR RELAY	NONE	NONE
		OUTPUT RELAY 1	

		OUTPUT RELAY 2	
OFF	SASH WARNING TIMER	MINS	0
		OUTPUT RELAY 3	

7.0 LIMITATION OF WARRANTY AND LIABILITY

Seller warrants that this product, under normal use and service as described in the operator's manual shall be free from defects in workmanship and material for a period of twelve (12) months, or the length of time specified in the operator's manual, from the date of shipment to the customer. This limited warranty is subject to the following exclusion :-

a. Batteries and certain other components when indicated in specifications are warranted for a period of 90 days from the date of shipment to the customer.
b. With respect to any repair services rendered, Seller warrants that the parts repaired or replaced will be free from defects in workmanship and material, under normal use, for a period of 90 days from the date of shipment to the customer
c. Seller does not provide any warranty on finished goods manufactured by others. Only the original manufacturer's warranty applies.
d. Unless specifically authorised in a separate writing by Seller, Seller makes no warranty with respect to, and shall have no liability in connection with, any goods which are incorporated into other products or equipment by the Buyer. All goods returned under warranty shall be at the Buyer's risk of loss, Seller's factory prepaid, and will be returned at Seller's risk of loss, Buyer's factory prepaid.

The foregoing is IN LIEU OF all other warranties and is subject to the conditions and LIMITATIONS stated herein. NO OTHER EXPRESS OR IMPLIED WARRANTY OF FITNESS FOR PARTICULAR PURPOSE OR MERCHANTABILITY IS MADE.

THE EXCLUSIVE REMEDY OF THE USER OR PURCHASER, AND THE LIMIT OF LIABILITY OF SELLER FOR ANY AND ALL LOSSES, INJURIES, OR DAMAGES IN CONNECTION WITH THIS PRODUCT (INCLUDING CLAIMS BASED ON CONTRACT NEGLIGENCE, STRICT LIABILITY, OTHER TORT, OR OTHERWISE) SHALL BE THE RETURN OF THE PRODUCT TO THE FACTORY OR DESIGNATED LOCATION AND THE REFUND OF THE PURCHASE PRICE, OR, AT THE OPTION OF THE SELLER, THE REPAIR OR REPLACEMENT OF THE PRODUCT. IN NO EVENT SHALL SELLER BE LIABLE FOR ANY SPECIAL, INCIDENTAL OR CONSEQUENTIAL DAMAGES.SELLER SHALL NOT BE RESPONSIBLE FOR INSTALLATION, DISMANTLING, REASSEMBLY OR REINSTALLATION COSTS OR CHARGES. NO ACTION, REGARDLESS OF FORM, MAY BE BROUGHT AGAINST THE SELLER MORE THAN ONE YEAR AFTER THE CAUSE OF ACTION HAS ACCRUED.

The purchaser and all users are deemed to have accepted the terms of this LIMITATION OF WARRANTY AND LIABILITY, which contains the complete and exclusive limited warranty of Seller. This LIMITATION OF WARRANTY AND LIABILITY may not be amended or modified nor may any of its terms be waived except by a writing signed by an authorised representative of the Seller.

7.0 Contact us :-

For further information on our range of airflow alarms and controls please contact us at :-

HOLLAND SAFETY EQUIPMENT
726 McKinley Ave.
Libertyville, Illinois 60048
Phone : 847- 680-9930 Fax : 847-680-9938
e-mail: info@hollandsafety.com
web site: www.hollandsafety.com

Temperature Electronics Ltd
Export sales :-
Tel : + 44 1457 865635 Fax : + 44 1457 868843
e-mail: sales@tel-uk.com
web site: www.tel-uk.com