LABCONCO CORPORATION
8811 Prospect Avenue
Kansas City, MO 64132
(800) 821-5525, (816) 333-8811
(816) 363-0130 fax
labconco@labconco.com

User's Manual

RapidVap® Vacuum, N_2 & N_2/48 Evaporation Systems

Models

7900000	7900001
7900002	7900003
7900010	7900011
7900012	7900013
7910000	7910001
7910010	7910011
7910012	7910013
7910014	7910015

To receive important product updates, complete your product registration card online at **register.labconco.com**

Please read the User's Manual before operating the equipment.

Copyright © 2017 Labconco Corporation. The information contained in this manual and the accompanying products are copyrighted and all rights reserved by Labconco Corporation. Labconco Corporation reserves the right to make periodic design changes without obligation to notify any person or entity of such change.

Warranty

Labconco Corporation provides a warranty to the original buyer for the repair or replacement of parts and reasonable labor as a result of normal and proper use of the equipment with compatible chemicals. Broken glassware and maintenance items, such as filters, gaskets, light bulbs, finishes and lubrication are not warranted. Excluded from warranty are products with improper installation, erratic electrical or utility supply, unauthorized repair and products used with incompatible chemicals.

The warranty for RapidVap® Vacuum, N_2 & N_2/48 Evaporation Systems will expire one year from date of installation or two years from date of shipment from Labconco, whichever is sooner. Warranty is non-transferable and only applies to the owner (organization) of record.

Buyer is exclusively responsible for the set-up, installation, verification, decontamination or calibration of equipment. This limited warranty covers parts and labor, but not transportation and insurance charges. If the failure is determined to be covered under this warranty, the dealer or Labconco Corporation will authorize repair or replacement of all defective parts to restore the unit to operation. Repairs may be completed by 3rd party service agents approved by Labconco Corporation. Labconco Corporation reserves the rights to limit this warranty based on a service agent's travel, working hours, the site's entry restrictions and unobstructed access to serviceable components of the product.

Under no circumstances shall Labconco Corporation be liable for indirect, consequential, or special damages of any kind. This warranty is exclusive and in lieu of all other warranties whether oral, or implied.

Returned or Damaged Goods

Do not return goods without the prior authorization from Labconco. Unauthorized returns will not be accepted. If your shipment was damaged in transit, you must file a claim directly with the freight carrier. Labconco Corporation and its dealers are not responsible for shipping damages.

The United States Interstate Commerce Commission rules require that claims be filed with the delivery carrier within fifteen (15) days of delivery.

Limitation of Liability

The disposal and/or emission of substances used in connection with this equipment may be governed by various federal, state, or local regulations. All users of this equipment are required to become familiar with any regulations that apply in the user's area concerning the dumping of waste materials in or upon water, land, or air and to comply with such regulations. Labconco Corporation is held harmless with respect to user's compliance with such regulations.

Contacting Labconco Corporation

If you have questions that are not addressed in this manual, or if you need technical assistance, contact Labconco's Customer Service Department or Labconco's Product Service Department at 1-800-821-5525 or 1-816-333-8811, between the hours of 7:30 a.m. and 5:30 p.m., Central Standard Time.

Part #7490100, Rev. K
ECO #L122

TABLE OF CONTENTS

CHAPTER 1: INTRODUCTION 1
About This Manual 2
Typographical Conventions 3
Your Next Step 3

CHAPTER 2: PREREQUISITES 5
Electrical Requirements 5
Location and Exhaust Requirements 6
Vacuum Pump Requirements 6
Vacuum Line Traps 7
Nitrogen Supply Requirements 8
Space Requirements 8
Tools Required 8
Your Next Step 8

CHAPTER 3: GETTING STARTED 9
Unpacking Your RapidVap 9
RapidVap Components 10
Setting Up Your RapidVap 12
Vacuum Pump Connection 12
Sample Block 13
Nitrogen Gas Connection 15
Exhaust Port 15
Electrical Connection 15
Calibrate the Vacuum Sensor 15
Chemical Attack on RapidVap Components 15
Solvent Safety Precautions 17
Your Next Step 18

CHAPTER 4: USING YOUR RAPIDVAP 19
Planning 19
Glassware Selection and Speed Setting Guidelines 20
Loading Glassware Into the RapidVap 22
Heat Setting Guidelines 23
Time Setting Guidelines 27
RapidVap Controls 29
Operating the RapidVap Controls 30
Operating The RapidVap 32
Operational Notes 33
Interrupting a Cycle After it Has Begun 33
End Alarms 33
RS-232 Communications 34
RS-232 Programming Syntax 34
RS-232 Hardware Required 36

CHAPTER 5: MAINTAINING YOUR RAPIDVAP 37

CHAPTER 6: MODIFYING YOUR RAPIDVAP 39
Changing the Sample Blocks 39
Installing the Optional Lid Heater 40

CHAPTER 7: TROUBLESHOOTING 41

APPENDIX A: RAPIDVAP AND RAPIDVAP N_2 COMPONENTS 45

APPENDIX B: RAPIDVAP DIMENSIONS 52

APPENDIX C: RAPIDVAP SPECIFICATIONS 54
Wiring Diagram (115V) 56
Wiring Diagram (230V) 57
Evaporation Rates 58
RapidVap Vacuum Models 58
RapidVap N_2 Models 59
RapidVap N_2/48 Models 63

APPENDIX D: RAPIDVAP ACCESSORIES 65
RapidVap Vacuum Model Accessories 65
RapidVap N_2 Model Accessories 68
RapidVap N_2/48 Model Accessories 70

CHAPTER 1
INTRODUCTION

Congratulations on your purchase of a Labconco RapidVap. Labconco manufactures two types of RapidVaps - one utilizes vacuum and the other utilizes nitrogen as an aid to evaporation. Each model is available for operation on 115V or 230V.

Superior evaporation rates are achieved by the unique blending of several gentle forces on the sample. Samples are subjected to a gyrating motion causing the liquid to form a vortex configuration which greatly increases the surface area and hence the ability to evaporate. A precisely controlled amount of thermal energy can be supplied to the sample to heat it. In the vacuum model, the sample can be subjected to a decreased pressure by the application of a regulated vacuum. In summary, the vacuum model RapidVap performance is maximized by increasing the sample's surface area, increasing temperature and decreasing pressure.

In the RapidVap N_2, a stream of nitrogen or dry gas is directed downward onto the surface of the sample. This reduces the partial pressure directly over the liquid to speed evaporation and helps remove the solvent as it evaporates. In summary, the RapidVap N_2 performance is maximized by increasing the sample's surface area, increasing temperature and directing gas over the sample.

The gyrating motion imparted to the sample causes other, more subtle effects to occur. Excellent mixing of the components in the liquid sample is obtained. Also, as the liquid forms the vortex shape, a centrifugal force is established which forces the liquid outward against the tube walls. This helps prevent bumping and in turn allows the evaporation rate to be optimized.

The microprocessor which controls the operation of the heater and the motor provides excellent regulation and reproducibility of protocols. The end of the run can be signaled by the automatic end point system or by a manually preset timer. Nine different protocols can be stored in memory so exact test parameters can be easily repeated.

About This Manual

This manual is designed to help you learn how to install, use, and maintain your RapidVap. Instructions for performing routine maintenance and making minor modifications to your RapidVap are also included.

Chapter 1: Introduction provides a brief overview of the RapidVap, explains the organization of the manual, and defines the typographical conventions used in the manual.

Chapter 2: Prerequisites explains what you need to do to prepare your site before you install your RapidVap. Electrical and exhaust requirements are discussed as well as vacuum pump or nitrogen requirements.

Chapter 3: Getting Started contains the information you need to properly unpack, inspect, install, and test your RapidVap.

Chapter 4: Using Your RapidVap discusses the basic operation of your RapidVap. Information on how to arrange the samples inside your RapidVap and select an operating cycle is included.

Chapter 5: Maintaining Your RapidVap explains how to perform routine maintenance on your RapidVap.

Chapter 6: Modifying Your RapidVap describes how to install other blocks and the optional lid heater.

Chapter 7: Troubleshooting contains a table of problems you may encounter while using your RapidVap, including the probable causes of the problems, and suggested corrective actions.

Appendix A: RapidVap and RapidVap N_2 Components contains labeled diagrams of the components of the RapidVaps.

Appendix B: RapidVap Dimensions contains comprehensive diagrams showing the dimensions for the RapidVap and RapidVap N_2.

Appendix C: RapidVap Specifications contains product specifications. Wiring diagrams for both the 115V and 230V RapidVaps are also included.

Appendix D: RapidVap Accessories lists the part numbers and descriptions of all of the accessories available for your RapidVap.

Typographical Conventions

Recognizing the following typographical conventions will help you understand and use this manual:

- Book, chapter, and section titles are shown in italic type (e.g., *Chapter 3: Getting Started*).
- Steps required to perform a task are presented in a numbered format.
- Comments located in the margins provide suggestions, reminders, and references.

- Critical information is presented in boldface type in paragraphs that are preceded by the exclamation icon. Failure to comply with the information following an exclamation icon may result in injury to the user or permanent damage to your RapidVap.
- Les informations critiques sont présentées en caractères gras dans les paragraphes qui sont précédés par le point d'exclamation. Le non respect de l'information suite à un point d'exclamation peut entraîner des blessures pour l'utilisateur ou des dommages permanents à votre RapidVap.

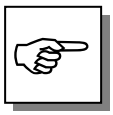

- Important information is presented in capitalized type in paragraphs that are preceded by the pointer icon. It is imperative that the information contained in these paragraphs be thoroughly read and understood by the user.

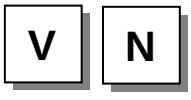

- Information that is specific to a particular model of RapidVap is preceded by a letter icon. The V icon indicates the text is specific to the Vacuum model. The N icon indicates the text is specific to the RapidVap N_2 model.

- CAUTION – See Manual. When this symbol is on the unit it indicates a caution that is detailed in this manual.
- ATTENTION – Voir le manuel. Lorsque ce symbole est allumé l'unité, il indique une mise en garde qui est détaillée dans ce manuel.

Your Next Step

If your RapidVap needs to be installed, proceed to *Chapter 2: Prerequisites* to ensure your installation site meets all of the requirements. Then, go to *Chapter 3: Getting Started* for instructions on how to install your RapidVap and make all of the necessary connections.

For information on the operational characteristics of your RapidVap, go to *Chapter 4: Using Your RapidVap.*

If your RapidVap is installed and you need to perform routine maintenance on the RapidVap, proceed to *Chapter 5: Maintaining Your RapidVap.*

For information on making modifications to the configuration of your RapidVap go to *Chapter 6: Modifying Your RapidVap.*

Refer to *Chapter 7: Troubleshooting* if you are experiencing problems with your RapidVap.

CHAPTER 2
PREREQUISITES

Before you install your RapidVap, you need to prepare your site for installation. Carefully examine the location where you intend to install your RapidVap. You must be certain that the area is level and of solid construction. In addition, an exhaust means must be provided and a source of nitrogen must be available for the RapidVap N_2. An electrical source must be located near the installation site.

Carefully read this chapter to learn:

- the electrical supply requirements.
- the exhaust requirements.
- the nitrogen supply requirements for the RapidVap N_2.
- the vacuum pump requirements for the RapidVap Vacuum.

Refer to *Appendix C: RapidVap Specifications* for complete RapidVap electrical and environmental conditions, specifications and requirements.

!

If the unit is not operated as specified in this manual it may impair the protection provided by the unit.

Si l'appareil n'est pas utilisé comme spécifié dans ce manuel, il peut compromettre la protection offerte par l'appareil.

Electrical Requirements

V

If your RapidVap is a Vacuum model, a dedicated electrical outlet is required. This outlet requires a 20 Amp circuit breaker or fuse for models rated at 115V (60 Hz). A 10 Amp circuit breaker or fuse is required for models rated at 230V (50/60 Hz). 115V models are equipped with a 20 Amp NEMA 5-20P plug. 230V models are equipped with a 16 Amp CEE 7/7 plug. It may be necessary to remove the plug and install a different plug to match the available receptacle.

N

If your RapidVap is a Nitrogen model, a dedicated electrical outlet is required. This outlet requires a 15 Amp circuit breaker or fuse for models rated at 115V (60 Hz) or an 8 Amp circuit breaker or fuse is required for 230V (50/60 Hz) models. 115V models are equipped with a 20 Amp NEMA 5-20P plug. 230V models are equipped with a 16 Amp CEE 7/7 plug. It may be necessary to remove the plug and install a different plug to match the available receptacle.

Do not use any detachable power cord that is not adequately rated for the unit.

N'utilisez pas de cordon d'alimentation amovible qui n'est pas suffisamment puissant pour l'unité.

Location and Exhaust Requirements

V

The RapidVap Vacuum Evaporation System should be located within a fume hood if hazardous or flammable solvents are used. In all cases, regardless of the solvent used, it is strongly recommended that the vacuum pump is located and vented in a fume hood.

N

The RapidVap N_2 Evaporation System should be located within a fume hood if hazardous or flammable solvents are used. In all cases, regardless of the solvent used, it is recommended that the exhaust hose is vented into a fume hood or other laboratory ventilation device.

Do not position the unit so that it is difficult to operate the main disconnect device.

Ne pas placer l'appareil de sorte qu'il est difficile de faire fonctionner le dispositif de déconnexion principal.

Vacuum Pump Requirements

V

A vacuum pump must be provided by the user. For most applications, it is recommended that the vacuum pump is capable of a free air flow of 63 L/min and 1.5 mbar vacuum although, in some applications other pumps may be satisfactory or be required. The inlet fitting on the vacuum pump must be suitable for 0.50 I.D. hose.

Biological samples, for example, are often dissolved in water, a high boiling point solvent, and are often heat liable. Such samples require the high vacuum achievable with a mechanical vacuum pump, usually with an ultimate vacuum of 7×10^{-3} mBar to achieve a good evaporation rate.

On the other hand, samples dissolved in methylene chloride, a low boiling point solvent, can be efficiently concentrated using a water aspirator.

The nomograms in *Chapter 4: Using Your RapidVap* will help determine the boiling point of a solvent at pressures below atmospheric. This can serve as a guide to the appropriate vacuum source.

TO INSURE THAT AGGRESSIVE SAMPLES USED IN THE RAPIDVAP DO NOT DAMAGE THE VACUUM PUMP, IT IS RECOMMENDED THAT ALL INTERNAL WETTED PARTS ARE PTFE OR PTFE COATED. TO PREVENT A HAZARDOUS CONDITION, THE PUMP MUST BE SUITABLE FOR HANDLING THE VAPORS FROM THE SOLVENTS THAT WILL BE EVAPORATED IN THE RAPIDVAP.

CAUTION: When selecting the vacuum pump it is very important to consider the flammability of the solvents that will be used. If the solvents are flammable, an explosion proof vacuum pump is recommended.

ATTENTION: Lors de la sélection de la pompe à vide, il est très important d'examiner l'inflammabilité des solvants qui seront utilisés. Si les solvants sont inflammables, d'une pompe à vide à l'épreuve des explosions est recommandé

Vacuum Line Traps

When using a mechanical pump which is not corrosion resistant, a trap must be used in the vacuum line to prevent damage from solvent vapors. This is most often a condenser-type trap chilled with dry ice/acetone. When evaporating acids, it is advisable to include a soda lime acid trap in the vacuum line. This adds additional protection for the pump.

Several components within the RapidVap are made from stainless steel and can be degraded if exposed to acids. Before evaporating acids, be sure to contact Labconco.

Plusieurs composants du RapidVap sont en acier inoxydable et peuvent être dégradés s'ils sont exposés à des acides. Avant de s'évaporer acides, n'oubliez pas de contacter Labconco.

A moisture trap and radioisotope trap are also available. When evaporating high boiling point solvents, a liquid trap should be positioned between the RapidVap and the vacuum pump to prevent liquid from entering the pump. Refer to *Appendix D: RapidVap Accessories* for ordering information.

Nitrogen Supply Requirements

N

The 1/4" I.D. hose on the rear of the RapidVap N_2 must be attached to a source of nitrogen or other suitable gas. Pressure must NOT exceed 20 psi. A regulator must be supplied by the user. The nitrogen supply must be capable of 0.6 CFM flow rate for the 8 place RapidVap N_2. The RapidVap N_2/48 requires a flow rate of 3.5 CFM. A suitable barb or compression fitting must be supplied by the user.

Space Requirements

Refer to *Appendix C: RapidVap Specifications* for dimensional drawings of the RapidVap.

Tools Required

Common hand tools are required to set up the RapidVap. A screwdriver or 5/16" socket is needed to attach hose clamps. A tubing cutter or knife is needed to shorten exhaust hoses. If the sample block must be installed or exchanged, attaching nuts on the RapidVap Vacuum and RapidVap N_2 require a 7/16" socket. The manifold guides, which secure the block on the RapidVap N_2/48, require a 9/16" socket.

Your Next Step

After you have determined that the location for your RapidVap accommodates the installation and operational requirements, you are ready to unpack and install your RapidVap. Proceed to *Chapter 3: Getting Started.*

CHAPTER 3
GETTING STARTED

Now that the site for your RapidVap is properly prepared, you are ready to unpack, inspect, install, and test your RapidVap. Read this chapter to learn how to:

- unpack and move your RapidVap.
- set up your RapidVap.
- connect the vacuum pump or nitrogen source to your RapidVap.
- connect the electrical supply source to your RapidVap.
- properly exhaust your RapidVap.
- calibrate the vacuum sensor.
- solvent safety precautions.

Depending upon which model of RapidVap you are installing, you will need common hand tools including a flat blade screw driver, a 7/16" socket and an adjustable wrench to complete the instructions in this chapter.

The RapidVap weighs over 70 lbs. (33 Kg). The carton allows for lifting with a mechanical lift truck or hand truck. If you must lift the RapidVap manually, use at least two (2) persons and follow safe-lifting guidelines.

Unpacking Your RapidVap

The United States Interstate Commerce Commission rules require that claims be filed with the delivery carrier within fifteen (15) days of delivery.

Carefully unpack your RapidVap and inspect it for damage that may have occurred in transit. If your RapidVap is damaged, notify the delivery carrier immediately and retain the entire shipment intact for inspection by the carrier.

DO NOT RETURN GOODS WITHOUT THE PRIOR AUTHORIZATION OF LABCONCO. UNAUTHORIZED RETURNS WILL NOT BE ACCEPTED.

IF YOUR RAPIDVAP WAS DAMAGED IN TRANSIT, YOU MUST FILE A CLAIM DIRECTLY WITH THE FREIGHT CARRIER. LABCONCO CORPORATION AND ITS DEALERS ARE NOT RESPONSIBLE FOR SHIPPING DAMAGES.

Do not discard the carton or packing material for your RapidVap until you have checked all of the components and installed and tested the RapidVap.

RapidVap Components

As previously mentioned, Labconco manufactures two types of RapidVap, the Vacuum and the Nitrogen models. Each model is available in 115V or 230V.

The different RapidVap models require different assembly components. Locate the model of RapidVap you received in the following tables. Verify that the components listed are present and undamaged.

Catalog #	RapidVap Description
79000-00	RapidVap Vacuum System – 115V
79000-01	RapidVap Vacuum System – 230V
79000-02	RapidVap Vacuum System – 115V with lid heater
79000-03	RapidVap Vacuum System – 230V with lid heater
79000-10	RapidVap Vacuum System – 115V with RS 232 Interface
79000-11	RapidVap Vacuum System – 230V with RS 232 Interface
79000-12	RapidVap Vacuum System – 115V with lid heater with RS 232 Interface
79000-13	RapidVap Vacuum System – 230V with lid heater with RS 232 Interface

Plus the Following:

Part #	Component Description
78286-04	Hose - Vacuum
14888-00	Two (2) Clamps
13364-00	Power Cord – 115V
	or
13365-00	Power Cord – 230V
19116-00	Washer (3)
19092-21	Acorn Nut (3)
12556-00	Heat Transfer Grease
74901-00	User’s Manual
74848-00	Cable Assembly RS232 (Models 79000-10, -11, -12, -13)

Since users' preference of sample size varies, the sample holding block is not included with the RapidVap Vacuum System or the RapidVap N_2/48 Evaporation System. The correct size block must be selected and ordered separately. Refer to *Appendix D: RapidVap Accessories* for block selection.

Catalog #	**RapidVap Description**
79100-00	RapidVap N_2 Evaporation System – 115V
79100-01	RapidVap N_2 Evaporation System – 230V
79100-10	RapidVap N_2 Evaporation System – 115V with RS 232 Interface
79100-11	RapidVap N_2 Evaporation System – 230V with RS 232 Interface

Plus the Following:

Part #	**Component Description**
79131-01	Exhaust Hose
19660-00	One (1) Clamp
79255-00	Eight (8) Sample Tube Caps
13364-00	Power Cord – 115V
	or
13365-00	Power Cord – 230V
12556-00	Heat Transfer Grease
74901-00	User's Manual
74848-00	Cable Assembly RS232 (Models 79100-10, -11)

Catalog #	**RapidVap Description**
79100-12	RapidVap N_2/48 Evaporation System – 115V
79100-13	RapidVap N_2/48 Evaporation System – 230V
79100-14	RapidVap N_2/48 Evaporation System – 115V with RS 232 Interface
79100-15	RapidVap N_2/48 Evaporation System – 230V with RS 232 Interface

Plus the Following:

Part #	**Component Description**
79131-00	Exhaust Hose – 6 ft.
19660-00	One (1) Clamp
13364-00	Power Cord – 115V
	or
13365-00	Power Cord – 230V
12556-00	Heat Transfer Grease
74901-00	User's Manual
74488-00	Manifold Guide (3)
19116-00	Washer (3)
74848-00	Cable Assembly RS232 (Models 74100-14, -15)

If you do not receive one or more of the components listed for your RapidVap, or if any of the components are damaged, contact Labconco Corporation immediately for further instructions.

Setting Up Your RapidVap

After you verify the RapidVap components, move your RapidVap to the location where you want to install it. Then, follow the steps listed below.

Vacuum Pump Connection

V

Connect the pump inlet to the fitting at the right hand rear corner of the RapidVap using the hose and clamps provided. Route the hose to prevent kinks. Clamp all connections securely. Plug the pump into the pump receptacle on the back of the unit and turn the pump switch on if it is so equipped. When evaporating high boiling point solvents, a liquid trap should be positioned between the RapidVap and the vacuum pump to prevent liquid from entering the pump. It is recommended that the vacuum pump is located inside a fume hood. If that is not possible, the exhaust of the pump should be directed to a laboratory fume hood or other laboratory ventilation device.

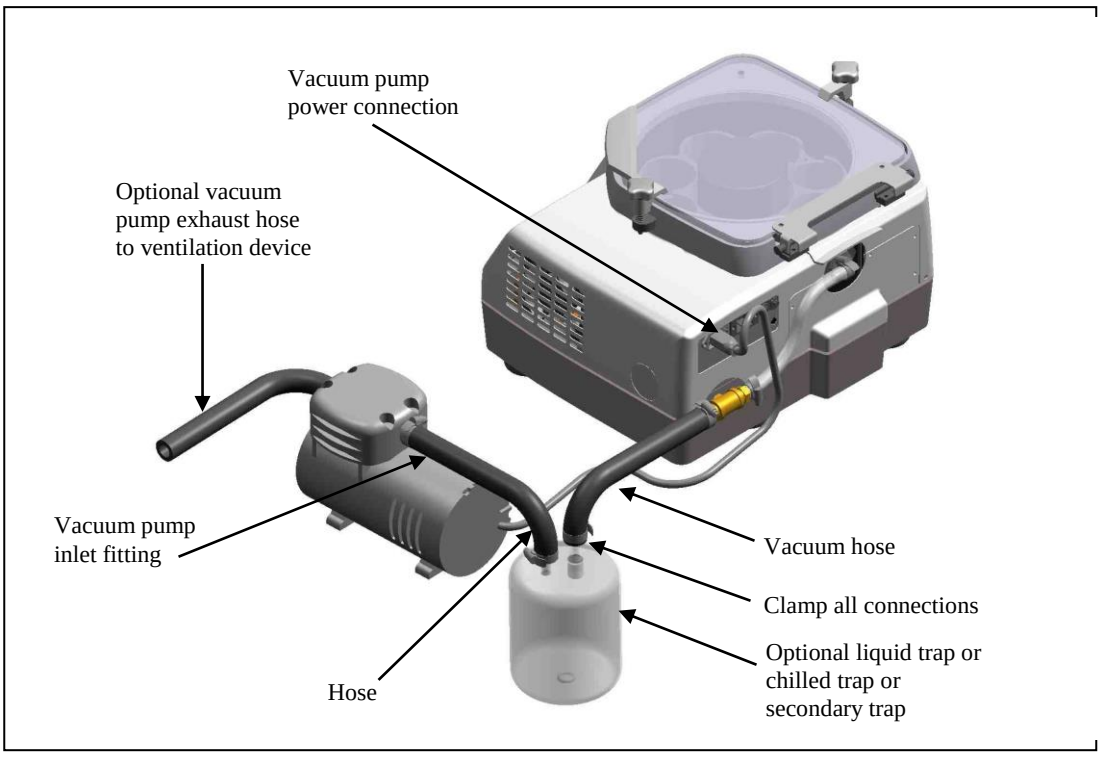

There is a switch on the back of the RapidVap Vacuum that is used to select the operation of an optional RapidVap Trapping Valve. When the RapidVap is used without the Trapping Valve as shown above, set the switch to the “Off” position.

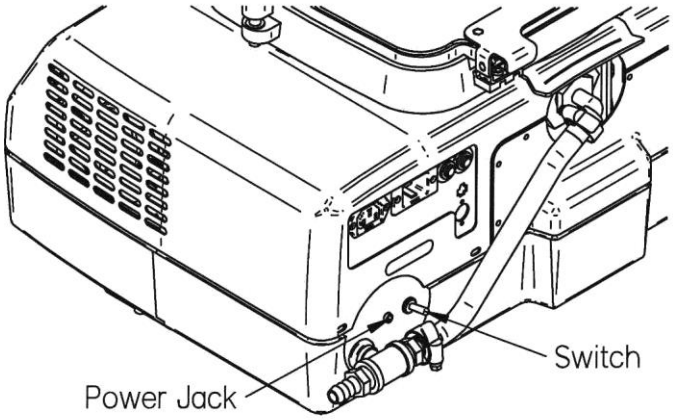

Sample Block

If the RapidVap was not shipped with the sample block installed then it must be installed by the user. The sample block must be securely attached to its mounting plate. Note the asymmetric hole pattern of the three thru mounting holes. Locate the three flat washers either nuts or manifold guides that were shipped with the RapidVap. The RapidVap Vacuum uses nuts while the RapidVap N_2/48 uses guide rods.

Apply a small amount of heat transfer grease that was shipped with the RapidVap to the end of the temperature sensor probe that extends up from the bottom of the chamber. Position the block over the three studs in the chamber. Install the flat washers and either nuts or guide rods. Tighten securely.

Never lift the lid if the block is moving. Samples may splash out.

Ne jamais soulever le couvercle si le bloc est en mouvement. Les échantillons peuvent gicler.

Never operate the RapidVap without the sample block securely fastened in place. Excessive vibration will occur.

Ne jamais faire fonctionner le RapidVap sans le bloc d'échantillon fixé solidement en place. Des vibrations excessives se produira.

Never attempt to reach into the chamber if the block is moving.

Ne jamais tenter de mettre la main dans la chambre si le bloc est en mouvement.

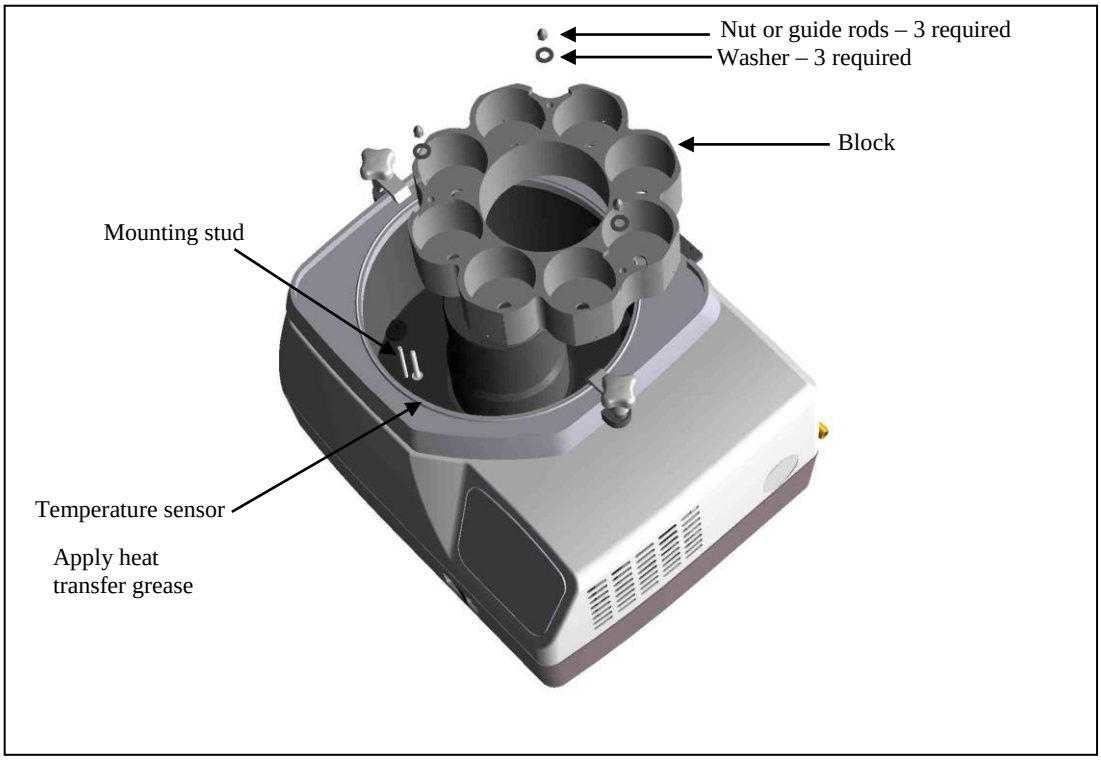

Nitrogen Gas Connection

N

Turn the gas supply off. Install a barb fitting suitable for a 1/4" I.D. hose into the "out" port of the regulator. Clamp securely. Alternately, a compression fitting may be used that is suitable for a hose with a 3/8" O.D. and 1/4" I.D.

THE NITROGEN PRESSURE MUST NEVER BE ALLOWED TO EXCEED 20 PSI. (103 KPA)

Exhaust Port

N

If the RapidVap N_2 is not located in a fume hood, attach one end of the two inch diameter venting hose that is supplied with the RapidVap to the exhaust port on the right side of the unit. Clamp securely. Route the other end to a fume hood or other laboratory ventilation device.

Electrical Connection

Plug the power cord into the receptacle on the back of the RapidVap and plug the other end into a suitable wall power receptacle.

Calibrate the Vacuum Sensor

V

The vacuum sensor can be calibrated to room ambient atmospheric pressure. To do this, determine the atmospheric pressure using a known reference device such as a mercury barometer. Press and hold the vacuum release button on the RapidVap while turning on the RapidVap power switch. Use the increase or decrease buttons to make the vacuum display agree with the reference pressure. Press run to store the calibration in memory.

Chemical Attack on RapidVap Components

Your RapidVap Evaporation System is designed to be chemical resistant to most compounds that are commonly used in the concentration processes that are performed in it. However, by necessity, the RapidVap is comprised of a number of different materials, some of which may be attacked and degraded by certain chemicals. The degree of degradation is obviously dependent on the concentration and duration of exposure. Some of the major components of the RapidVap that are susceptible to degradation are as follows:

		Acids								Bases				Solvents										
COMPONENT	MATERIAL	Acetic Acid 20%	Boric Acid	Formic Acid	Hydrobromic Acid 20%	Hydrochloric Acid 20%	Nitric Acid 20%	Sulfuric Acid 10%	Trifluoroacetic Acid (TFA)		Ammonium Hydroxide	Potassium Hydroxide		Acetone	Acetonitrile	Chloroform	Dimethyl Formamide	Dimethyl Sulfoxide (DMSO)	Ethanol	Ethyl Acetate	Hexanes	Isoproponal	Methylene Chloride	Toluene
Manifold N2/48	Acetal	C			C	C	D	D	D		C						D							C
Exhaust Elbow N2	Polyamid (Nylon)	D		D	D	D	D	D	D			C										D	C	
Blower Fan N2	Polyamid (Nylon)	D		D	D	D	D	D	D			C										D	C	
Exhaust Hose N2	Polyethylene						C							C		C				C	C		C	C
Vacuum Fittings	Polypropylene															C								C
Blower Housing N2	Polypropylene															C								C
Vacuum Hose	PVC	D		C			D		D					D	D		D	D	C	D	D		D	D
Trim Ring	Bromyl Butyl							C	D						D	D	D				D		D	D
O- Rings	Neoprene		D		D	C	D		D					C	D	D	D			D			D	D
Block Hardware	Stainless Steel																							
Nozzle N2	Stainless Steel				D	D		D																
Vacuum Sensor	Stainless Steel				D	D		D																

C- Moderate Degradation- Questionable Use
D- Severe Degradation- Infrequent use recommended- immediate thorough cleaning required

- If a rotary vane vacuum pump is used, most compounds used in the RapidVap will degrade the oil if allowed to enter the pump. Generally, a rotary vane pump is not suitable for use with the RapidVap.
- Diaphragm vacuum pumps sold by Labconco have wetted parts either made from PTFE or protected by PTFE coatings and are suitable for nearly all procedures.
- Glass lids are suitable for use with all common compounds.

When using compounds in the RapidVap that are hostile to the materials of construction, it is imperative that the equipment is properly maintained.

- After each run, clean up all residues, spills, and materials that might have splashed in the chamber using agents suitable for the substance involved.
- When using a rotary vane pump the oil in the pump should be checked often. It must be changed if it is cloudy, shows particles or is discolored. The useful life of vacuum pump oil can be extended if the vacuum pump is operated for an extended period of time after the RapidVap run is over. This allows contaminants to be purged from the hot oil. This must be done with the inlet to the pump blocked off to prevent air from free flowing through the pump. If the pump is operated at an elevated vacuum level, oil will be expelled from the pump and damage will occur.

With prudent maintenance your RapidVap will provide years of service. Warranty on the effected parts will be void if maintenance has obviously been neglected. If you have questions about using specific compounds in your RapidVap, contact Labconco Technical Service at 1-800-821-5525 or 816-333-8811 or e-mail labconco@labconco.com.

Solvent Safety Precautions

The RapidVap is not classified as “explosion proof.” It has been designed with safety as a primary consideration and should be used in a prudent manner using “good laboratory practices.” It has been designed for use with compounds as described in the United States National Electrical Code Class I, Group D. The block that holds the sample tubes may be programmed to run as hot as 100°C, however, the heater element may normally run at 110°C. A thermal fuse limits the heater to a maximum temperature of 130°C. It is important that the solvents used are compatible with these temperatures. Do not evaporate solvents that have an autoignition temperature below 180°C. Do not evaporate solvents that are classified as Group A, B, or C by the National Electrical Code. Evaporate only non-flammable or Group D solvents with autoignition temperatures 180°C or above. Use of other compounds could cause an explosion.

Solvents used in the RapidVap may be flammable or hazardous. Use extreme caution and keep sources of ignition away from the solvents. When using flammable or hazardous solvents, both the RapidVap and the vacuum pump should be operated inside a fume hood.

If a sample is spilled in the chamber it must immediately be cleaned up.

Hazardous materials such as strong acids or bases, radioactive substances and volatile organics, must be handled carefully and promptly cleaned up if spilled.

Several components of the RapidVap which are located inside the chamber are made of stainless steel which can be attacked by acids. Use of acids such as trifluoroacetic acid can result in degradation of the product and the vacuum pump if the vacuum system is being used. Use care when using aggressive liquids which can damage the RapidVap and thoroughly clean the RapidVap after each use. Contact Labconco before evaporating acids.

WARNING: The disposal of substances used in connection with this equipment may be governed by various Federal, State or local regulations. All users of this equipment are urged to

**become familiar with any regulations that apply in the user's area concerning
the dumping of waste materials in or upon water, land or air and to comply with such regulations.**

AVERTISSEMENT: L'élimination des substances utilisées dans le cadre de ce matériel peut être régie par diverses réglementations fédérales, provinciales ou locales. Tous les utilisateurs de cet équipement sont invités à se familiariser avec tous les règlements qui s'appliquent dans le domaine de l'utilisateur concernant le déversement de déchets dans ou sur l'eau, la terre ou de l'air et de se conformer à ces règlements.

Your Next Step

The installation and setup of your RapidVap is now complete. To learn how to load and operate your RapidVap, proceed to *Chapter 4: Using Your RapidVap*. To make a modification to the configuration of your RapidVap, proceed to *Chapter 6: Modifying your RapidVap*. To perform additional diagnostics on your RapidVap, proceed to *Chapter 7:Troubleshooting*. To learn about the maintenance requirements for your RapidVap, proceed to *Chapter 5: Maintaining Your RapidVap*.

CHAPTER 4
USING YOUR RAPIDVAP

After your RapidVap has been installed as detailed in *Chapter 3: Getting Started*, you are ready to begin using your RapidVap. Read this chapter to learn how to:

- set operating parameters.
- operate the controls.
- properly select and position glassware inside your RapidVap.
- understand the display.
- interrupt a cycle after it has begun.

! **Do not use the RapidVap in a manner not specified by the manufacturer (refer to *Appendix C: RapidVap Specifications*). The electrical protection properties of the RapidVap may be impaired if the RapidVap is used inappropriately.**

Planning

V Thoroughly understand procedures and the equipment operation prior to beginning work. The unique performance of the RapidVap Vacuum is dependent upon the proper balance of heat, vacuum and vortexing action. If the proper balance is not established, it is possible to damage or lose a portion of the sample. Therefore, if you are unfamiliar with the RapidVap or are attempting a new protocol, it may be helpful to make a trial run that is void of the sample you are attempting to concentrate.

Select the size of the sample tube so it is compatible with the block. Tubes should not be loose in the block. Blocks are available with holes for various size tubes. Refer to *Appendix D: RapidVap Accessories* for available block sizes and pages 19 and 20 for recommended usable tube volumes and vortex speeds.

N

The unique performance of the RapidVap N_2 is dependent upon the proper balance of heat, gas flow and vortexing action. If the proper balance is not established, it is possible to damage or lose a portion of the sample. Therefore, if you are unfamiliar with the RapidVap N_2 or are attempting a new protocol, it may me helpful to make a trial run that is void of the sample you are attempting to concentrate.

Determine if the sample which is to be processed will be allowed to go to dryness or whether the evaporation is to cease prior to dryness. If the process should not go to dryness, the proper sample tubes must be selected to allow the desired amount of solvent to remain in the tubes. Sample tubes are available for various end point volumes. Refer to *Appendix D: Accessories* for available sample tubes. Any style ground glass tube may be used if the sample is to go to dryness, however, flat bottom tubes evaporate the quickest.

Glassware Selection and Speed Setting Guidelines

The speed at which the sample block should oscillate is dependent on the sample tube size and the sample volume. Generally, the tube should be no more than half full. The faster the speed, the higher the sample will vortex giving a maximum surface area and therefore a maximum evaporation rate. However, if the speed is too fast, samples will raise above the top of the tube and be lost. Smaller tubes can be run faster than larger tubes. The following table gives recommended safe speeds for tubes loaded with water. Experimentation with the specific sample may determine faster speeds. When setting the speed, keep in mind that the sample will raise up slightly in the tube when vacuum is applied to the chamber of the vacuum model.

GLASS VIALS USED IN THE RAPIDVAP SHOULD BE OF THE STYLE THAT DO NOT HAVE THE BEAD OR LIP ON THE TOP EDGE. IF VIALS WITH BEADS ARE USED, THE BEADS COULD HIT EACH OTHER AND BREAK THE GLASS.

V

Several different size sample blocks are available for the RapidVap Vacuum model. The maximum recommended sample volumes and vortex speeds are as follows:

TUBE SIZE	SAMPLE VOLUME	VORTEX SPEED
12 x 75 mm (6 ml)	3 ml	95%
13 x 100 mm (10 ml)	5 ml	95%
16 x 150 mm (23 ml)	12 ml	95%
15 ml centrifuge	7.5 ml	66%
28 mm (46 ml)	23 ml	48%
600 ml	50 ml	45%
	100 ml	45%
	200 ml	38%
	300 ml	29%
	400 ml	20%
	450 ml	18%

TUBE SIZE	SAMPLE VOLUME	VORTEX SPEED
170 ml	50 ml	50%
	75 ml	47%
	100 ml	42%
	125 ml	35%

N

Two sample blocks are available for the RapidVap N_2. Recommended speeds are as follows:

TUBE SIZE	SAMPLE VOLUME	VORTEX SPEED
600 ml	50 ml	90%
	100 ml	90%
	200 ml	76%
	300 ml	58%
	400 ml	40%
	450 ml	36%
170 ml	50 ml	100%
	75 ml	95%
	100 ml	85%
	125 ml	70%

Four sample blocks are available for the RapidVap N_2/48. Recommended speeds are as follows:

TUBE SIZE	SAMPLE VOLUME	VORTEX SPEED
12 mm (6 ml)	3 ml	100%
13 mm (10 ml)	5 ml	100%
16 mm (23 ml)	12 ml	100%
20 mm (35 ml)	18 ml	100%

Loading Glassware Into the RapidVap

Smooth operation of the RapidVap is dependent upon proper balance of the machine. Therefore, if less than a full load of samples is run, it is important to load samples into the RapidVap in a fairly uniform manner distributing the weight of the samples and glassware evenly in the sample block.

IN ORDER TO MAXIMIZE THE PERFORMANCE OF THE RAPIDVAP IT IS IMPORTANT THAT SOME OF THE SAMPLES ARE CLUSTERED AROUND THE FRONT LEFT HAND BLOCK MOUNTING STUD. THE BLOCK TEMPERATURE SENSOR IS LOCATED ADJACENT TO THIS BLOCK MOUNTING STUD. BY POSITIONING THE SAMPLE NEAR THE SENSOR, THE SENSOR WILL DETECT THE COOLING EFFECT OF THE EVAPORATING SAMPLES AND SIGNAL THE CONTROLS TO SUPPLY MORE HEAT TO THE SAMPLE BLOCK.

The best evaporation rate is achieved under conditions that maximize sample surface area. These include using the largest tube possible, and using the highest vortex speed possible.

N

When less than 8 samples are run in the RapidVap N_2 or less than 48 samples are run in the RapidVap N_2/48, nitrogen flow can be directed to 2, 4, or 6 positions. It is important to position glassware properly in the RapidVap N_2 when less than a full block is run to ensure that nitrogen gas is directed downward where the sample is located. Note the label on the hub in the center of the chamber. This indicates which nozzles on a RapidVap N_2 or nozzle clusters on a RapidVap N_2/48 will be activated. If one or two positions are to be run, samples must be positioned at locations identified (2). If three or four positions are to be run, samples must be positioned at locations identified (4). If five or six positions are to be run, samples must be positioned at locations identified (6). If seven or eight positions are to be run, samples may be positioned at any of the locations. When using the RapidVap N_2/48, glassware may be placed anywhere within the activated cluster of nozzles.

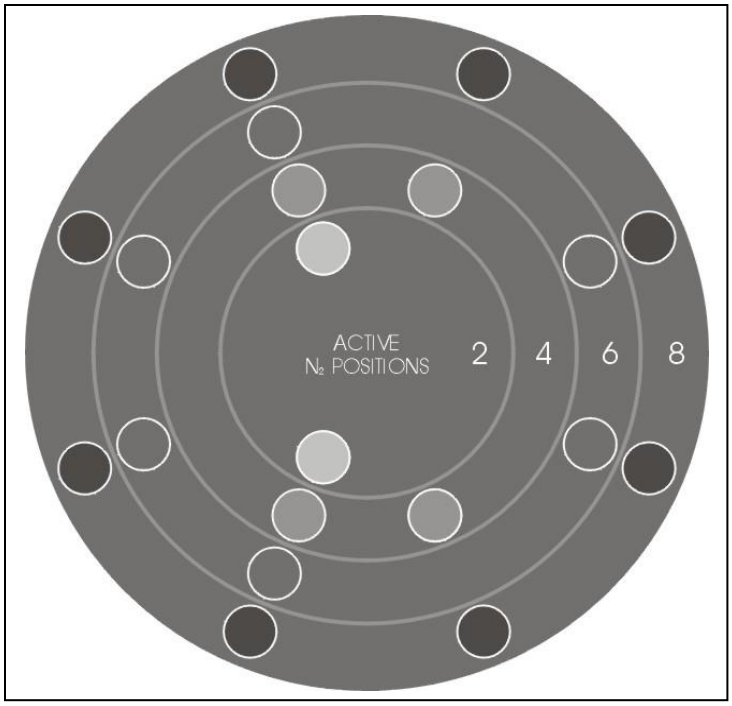

Heat Setting Guidelines

The evaporation rate achieved by the RapidVap is dependent upon a variety of factors. These include the nature of the solvent, the temperature, the pressure in the vacuum system or the flow of the nitrogen gas in the RapidVap N_2, the volume of sample, shape of tubes and vortex speed. Because of the multiplicity of factors it is impossible to give "typical" performance data.

By design, the RapidVap Vacuum model can be run at lower temperature settings than the RapidVap N_2 model. This is because the decrease in pressure will cause the sample to evaporate at a lower temperature. As a general guideline, to speed the evaporation process, the RapidVap temperature should be set as high as possible as long as the temperature will not damage the sample or cause the sample to bump.

V

In the RapidVap Vacuum models, generally the evaporation rate will be optimized with the block temperature set and preheated 20 to 40°C above the boiling point of the solvent at the operating pressure.

For example, methanol (which boils at 65°C at atmospheric pressure) boils at 5°C at pressure of 53 mBar. Under these vacuum conditions, the block temperature should be set between 25 to 45°C. The nomogram and equation to follow will help in this determination.

Calculating the boiling point:

The operating pressure corresponding to the desired boiling point temperature may be calculated for any solvent using the following formula:

$$\log P = 2.8811 - \left[\frac{Ta - T}{(b)(T)}\right]$$

Where P = Vacuum (mm Hg)
Ta = Boiling Point Temperature at Atmospheric Pressure (°K)
T = Desired Boiling Point Temperature (°K)
b = Constant from Table

Useful conversion factors:

1 mBar = .75 mm Hg
°K = °C + 273

Using the nomogram:

To use this graph, three facts must be known about a given solvent:

1. Boiling point at normal atmospheric pressure (1 Bar).
2. Constant b.
3. Either operating temperature or operating pressure.

To determine the desired boiling point at a given pressure:

1. Find the boiling point at normal atmospheric pressure (1 Bar) on the left side of the graph.
2. Find the operating pressure on the right side of the graph.
3. Draw a straight line linking these two points.
4. Find "Constant b" for the solvent on the top of the grid. Follow that line until it intersects with the line as drawn between the two points. This point represents the boiling point at the given pressure and the temperature is read off the left or right side of the grid (0-250°C).

To determine the operating pressure necessary to achieve a given boiling point:

1. Find the boiling point at normal atmospheric pressure (1 Bar) on the left side of the graph.
2. Find the "Constant b" and follow this line to the desired boiling point on the grid (0-250°C).
3. Draw a straight line linking these two points and extrapolate on the right hand scale to find the operating pressure.

Physical constants:

SOLVENT	BOILING PT (°C)	DENSITY (g/cm³)	HEAT OF VAPORIZATION (Kcal/Kg)	CONSTANT b	VACUUM FOR BOILING POINT AT 40°C (MBAR)
Acetone	56	.790	125	0.196	556
Acetonitrile	82	.786	178	0.195	208
Acetylene tetrachloride	147	1.602	53	0.200	20
Benzene	80	0.879	93	0.202	236
Butyl alcohol	118	0.810	120	0.156	26
Carbon tetrachloride	77	1.594	45	0.206	271
Chlorobenzene	132	1.110	90	0.202	36
Chloroform	60	1.480	59	0.203	474
1.2 Dichloroethane	83	1.235	126	0.201	210
Dichloroethylene	55	1.250	41	0.200	584
Diproplyether	68	0.726	76	0.207	375
Dioxide	111	1.034	98	0.195	70
Ethyl acetate	77	0.900	102	0.189	240
Ethyl alcohol	78	0.791	205	0.159	175
Ethylene dichloride	85	1.256	78	0.200	194
Heptane	98	0.680	74	0.200	120
Hexane	69	0.659	85	0.206	360
Iso-amyl alcohol	132	0.800	120	0.160	15
Iso-butyl alcohol	108	0.803	120	0.160	44
Isopropyl alcohol	82	0.785	160	0.158	136
Methyl alcohol	65	0.792	267	0.167	337
Methylene chloride	40	1.325	41	0.194	1013
Methyl ethyl ketone	80	0.810	113	0.206	243
N-Amyl alcohol	137	0.814	142	0.158	11
Pentachloroethane	159	1.700	45	0.207	15
Pentane	36	0.626	85	0.214	1013
Propyl alcohol	97	0.804	165	0.154	67
Tert, Butanol	83	0.787	141	0.154	130
1, 1, 2, 2, Tetrachloroethane	146	1.603	60	0.198	20
Tetrachloroethylene	121	1.624	50	0.202	53
Toluene	111	0.867	86	0.202	76
1, 1, 1, Trichloroethane	74	1.346	76	0.206	301
Trichloroethylene	87	1.462	57	0.202	183
Water	100	1.000	540	0.167	72
Xylene	140	0.870	82	0.199	25

Determination of Operating Conditions
Applied Vacuum/Boiling Point:

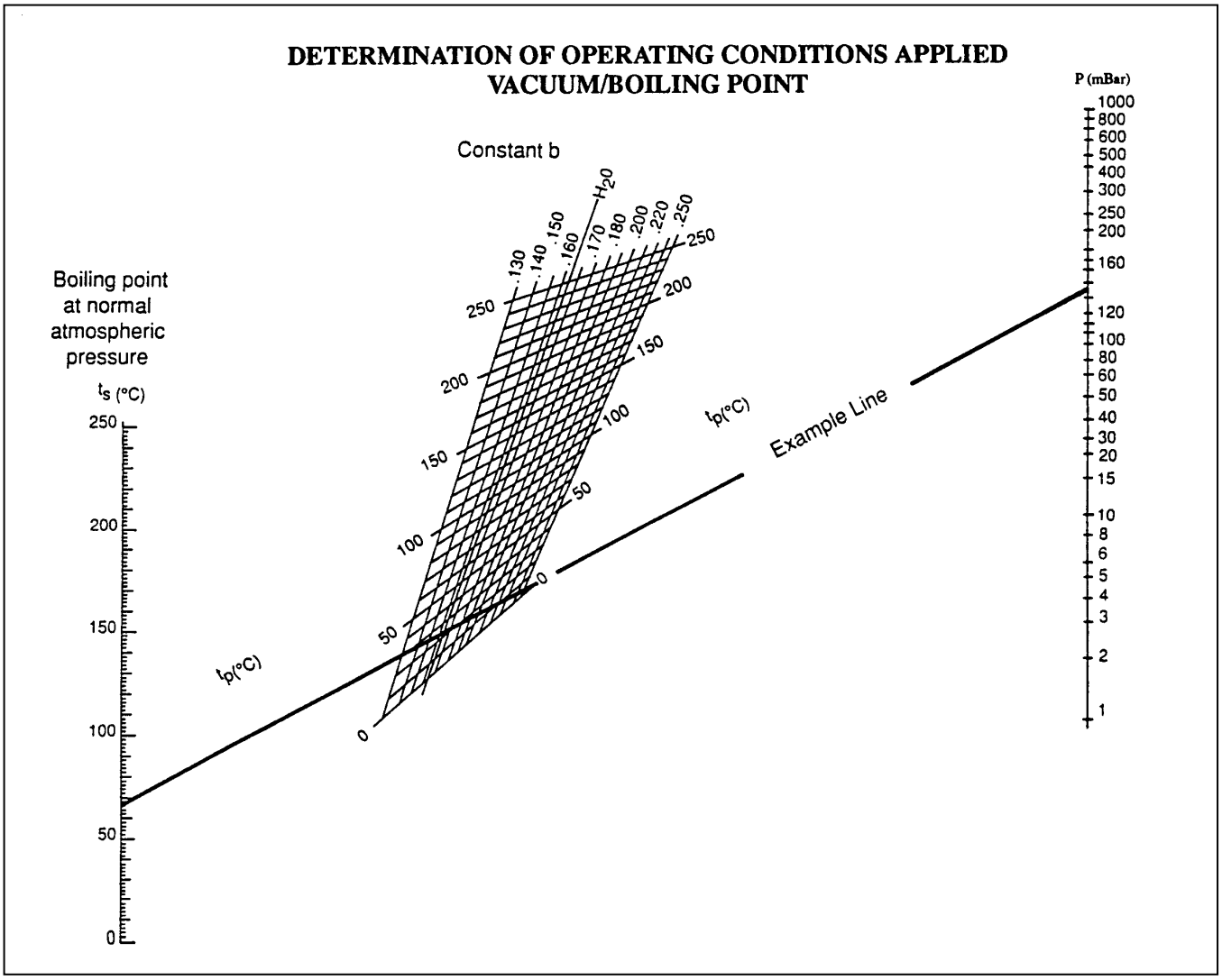

t_s = Boiling point at 1 bar (normal pressure)
t_p = Boiling point at P mbar (operating pressure)
p = Operating pressure in mbar

Example methyl alcohol:

1. Boiling point at normal (1 bar) atmospheric pressure = 65°C.
2. Constant b = 0.160
3. Operating pressure = 130 mBar
4. Boiling point at 130 mBar pressure = 24°C

Constant b	Groups
0.200	Aliphatic hydrocarbons Aliphatic halogenated hydrocarbons
0.195	Aromatic hydrocarbons Aromatic halogenated hydrocarbons Ketones Ethers Nitriles Heterocyclic compounds
0.190	Aldehydes Esters
0.185	Amines
0.180	Phenols
0.165	Acids
0.160	Alcohols

Time Setting Guidelines

N

It is often desirable to stop the concentration process before the solvent is entirely evaporated. This is accomplished by using glassware that has a small diameter stem on the bottom and using the “Time” function to shut off the process after a predetermined interval of time.

The “Cool Zone” feature is available on the RapidVap N_2 with 8 places and is not available on the RapidVap N_2 with 48 places.

The design of the RapidVap N_2 causes the evaporation to proceed quickly when the sample is in the larger upper chamber of the sample tubes. When the solvent evaporates sufficiently to drop the level into the smaller stem, the evaporation rate decreases significantly. This phenomenon allows the solvent in all sample tubes to evaporate out of the large upper chamber before any of the small chambers are completely evaporated dry providing that all sample tubes are filled with nearly the same starting volumes.

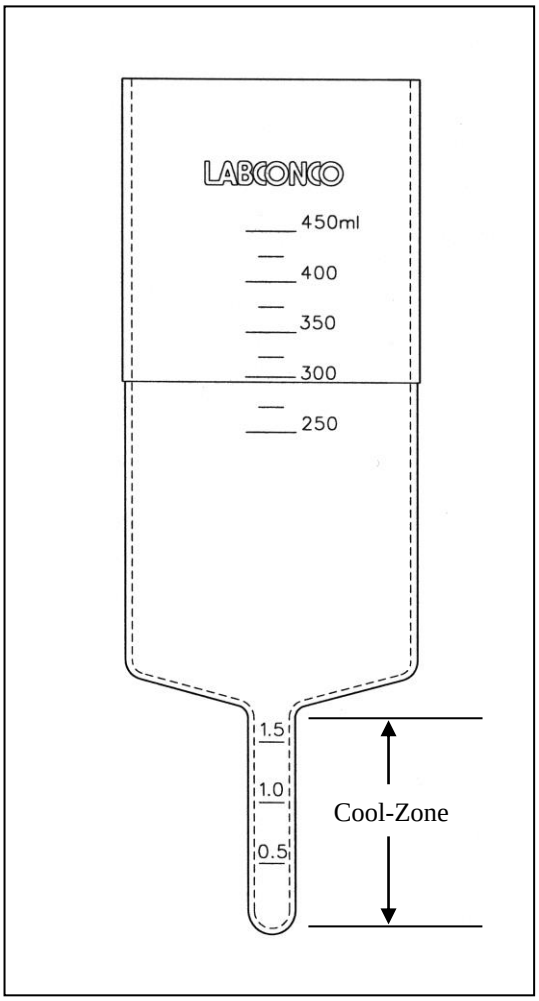

When it is necessary to end the concentration process with the sample still dissolved in a small amount of solvent, the time function should be activated and the process time set to allow the solvent sufficient time to evaporate completely out of the large upper portion of the sample tube and into the small lower portion "Cool Zone." This time can be approximated by knowing the starting sample size, the desired end point volume, the stem size of the sample tube used and the solvent. The tables in *Appendix C: RapidVap Specifications* indicate the approximate time required to evaporate various common solvents. Actual times must be determined by the user. When the set time has expired, the RapidVap N_2 will give an audible alarm and turn off all RapidVap functions.

V

The tables in *Appendix C: RapidVap Specifications* indicate approximate times required to evaporate various common solvents. Actual times must be determined by the user. The RapidVap can be set to alarm after a preset period of operation. When the time expires, the RapidVap will give an audible alarm and turn off all functions.

RapidVap Controls

The control panel for the RapidVap vacuum model and the RapidVap N_2 are shown below with a description about their function.

RapidVap Vacuum Model

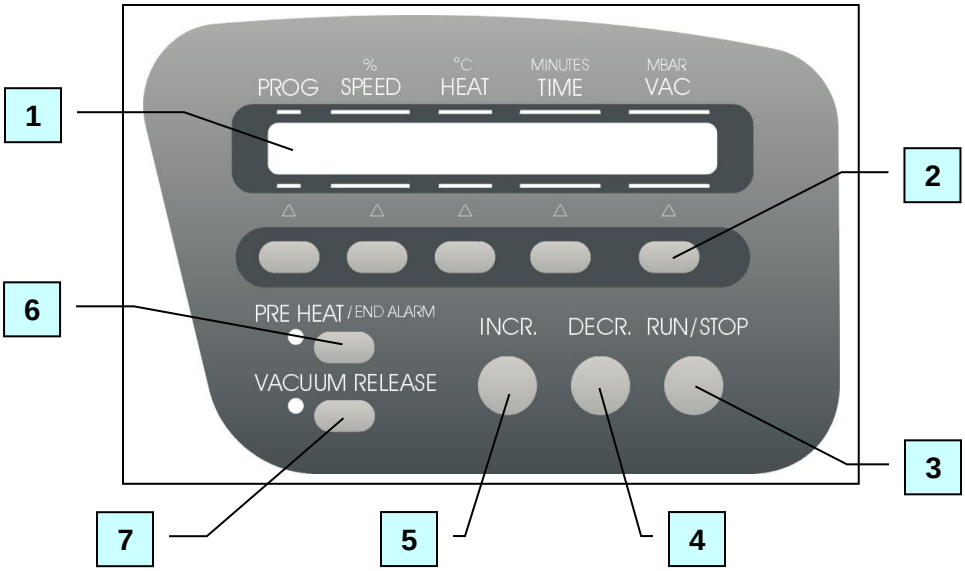

RapidVap N_2 Model

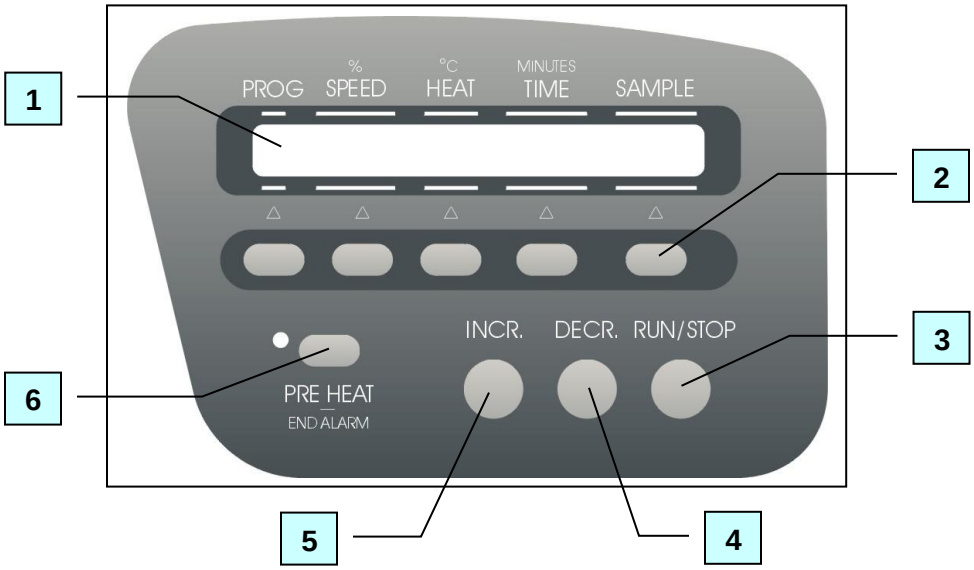

1. Display – The liquid crystal display (LCD) shows set point parameters and actual measured conditions.

2. Set Point Select Button – To select a parameter to change, press the set point select button directly below the parameter.
3. Run/Stop Button – Used to start or stop a run.
4. Decrease Button – When pressed, the last selected set point will decrease.
5. Increase Button – When pressed, the last selected set point will increase.
6. Preheat Button – Used to turn on the heaters to preheat the sample block prior to loading samples. When pressed during a run, it will switch the end point alarm from audible to muted or back to audible. The audible alarm is the default mode when the RapidVap is powered up.
7. Vacuum Release (Vacuum Model Only) – When pressed and held, the vacuum valve will open to break vacuum. This is used to quickly decrease vacuum should bumping of the sample occur.

Operating The RapidVap Controls

Preheat:

To preheat the chamber, press the preheat button. The LED next to the button will illuminate and the display will show:

SP: XXC ACT: XXC

Press increase or decrease buttons until the desired set point is displayed. The actual block temperature will be displayed to the right. When power is being supplied to the heaters, a bar under the actual temperature will illuminate. The block will continue to preheat until either the preheat button is pressed again or the run button is pressed.

Select existing program:

Operating parameters can be stored in memory so protocols can be repeated. Nine programs can be stored. To select a program, press the set point select button directly under the word “PROG.” An arrow will point to the current program number indicating that this set point can be altered. To change the program number, press the increase or decrease button until the desired program number is displayed. When the program number is changed, all its set points will change also to indicate the last entered parameters. Pressing the “PROG” set point button will reset the timer to the previous set point time.

Change speed set point:

To change the speed set point parameter, press the set point select button directly under the word “SPEED.” Arrows will point to the present set point. The speed may be altered from 0 to 100% by pressing the increase or decrease buttons. The last entered set point will be stored in memory.

It is suggested that the user set the vortex speed at a low percentage and gradually increase it after the run is started. This will minimize the possibility of samples sloshing out of the tubes. Reruns of the same protocol may start at the speed determined by previous runs.

Change heat set point:

To change the heat set point, press the set point select button under the word "HEAT." Arrows will point to the present set point which can be changed from -- (OFF) up to 99° by pressing the increase or decrease buttons. The set point is 100°C if the display shows "HI." The last entered set point will be stored in memory.

Change time set point:

To change the time set point, press the set point select button under the word "TIME." Arrows will point to the present set point which can be changed from 1 to 999 minutes by pressing the increase or decrease buttons. If it is desired to have the RapidVap run continuously without alarming at the end of a time period, press the increase button until the display says "RUN." The last entered set point will be stored in memory.

To reset the timer to the previous set point time, the "PROG" set point button must be pressed.

Change the Vacuum set point (Vacuum model only):

V

To change the vacuum set point, press the set point select button directly under the word "VACUUM." An arrow will point to the last entered vacuum set point. The vacuum level may be set between 0 to 999 mBar by pressing the increase or decrease buttons. Above 999 mBar, the display will show "HI." With a "HI" setting, the vacuum pump will not operate. The last entered set point will be stored in memory. Keep in mind that even though a deep vacuum set point may be entered, the actual vacuum level that the RapidVap will try to maintain can be no deeper than the vacuum level that the vacuum pump can maintain.

Select the number of samples that will be run (RapidVap N_2 only):

N

Press the set point select button under the word "SAMPLE." An arrow will point to the last entered set point. By pressing the increase or decrease button, the number of samples or clusters may be changed from 2 to 4 to 6 to 8. When running less than eight samples in the RapidVap N_2 or 48 samples in the RapidVap N_2/48, be sure to position them as described in the previous paragraph "Loading Glassware Into the RapidVap."

Operating The RapidVap

Never lift the lid if the block is moving. Samples may splash out.

Ne jamais soulever le couvercle si le bloc est en mouvement. Les échantillons peuvent éclabousser.

Never attempt to reach into the chamber if the block is moving.

Ne jamais tenter de mettre la main dans la chambre si le bloc est en mouvement.

Keep hands clear of lid at all times and do not place objects on the lid. Upon power up the unit may resume an interrupted program and the lid may start moving.

Gardez les mains éloignées de couvercle à tout moment et ne pas placer d'objets sur le couvercle. Dès la mise sous tension l'appareil peut reprendre un programme interrompu et le couvercle peut commencer à bouger.

1. Turn the power switch ON.
2. Select a program or set the set point parameters.
3. Turn on the nitrogen (RapidVap N_2 only).
4. Preheat the block if desired.
5. Place samples in vials. Normally the vials should be no more than half full.
6. Load sample vials in the chamber.
7. Close the lid. On RapidVap N_2/48 models, press down and rotate the cross bar on the top of the lid counter clockwise approximately 1/8".
8. Swing both latches over the lid and tighten both knobs. Do not over tighten.
9. Press RUN. If the display was showing set point parameters, it will change to show actual parameters. Press “RUN” again. The “S” (STOP) in the display will change to “R” (RUN).
10. Set point parameters can be altered at any time during a run by first selecting the parameter using the appropriate set point select button and then pressing the “Increase” or “Decrease” switch.
11. If the time set point is used, at the end of the set time an alarm will sound. All operating functions will cease.
12. Press STOP to terminate operation if the RapidVap has not already stopped itself.
13. When the evaporation is complete, allow the chamber to stop moving, unlatch the latches, on the RapidVap N_2/48 models rotate the cross bar clockwise approximately 1/8", lift the lid and remove the samples.

14. Any time the RapidVap is not in operation, the power switch should be turned OFF. This will prolong the life of the cooling fan and the blower in the RapidVap N_2.

Operational Notes

The LCD display conveys various pieces of information. When the RapidVap is turned on, the RapidVap will return to the same mode (RUN or STOP) that it was in when the power was turned off. If the RapidVap was in the RUN mode when the power was turned off, when the power is turned on, the RapidVap will attempt to return to the programmed set points.

If the previous run is to be duplicated, it is important to press the program set point button prior to pressing run. This will show all the set points for that program and will reset the timer back to the programmed set point. Without pressing the program set point button, the time will not be reset and will continue to count down from the time at which it was stopped.

Interrupting a Cycle After it Has Begun

At any time during a run, the cycle may be stopped by pressing the STOP button. This shuts off all operating functions. After the chamber stops oscillating, the latches may be unlatched and the lid opened. If it is necessary to re-start the RapidVap, close the lid and secure the latches and press RUN. The RapidVap will resume operation at the same set point parameters and the timer will continue to count down from the time at which the RapidVap was stopped.

End Alarms

The RapidVap has two means to signal the completion of a run. The first method is determined by the operator when the run time is set as described in the previous paragraph, Time Setting Guidelines. In the second method the RapidVap will automatically sense when an evaporation process is nearly complete by comparing temperatures in the unit. When the RapidVap detects end point, it will sound an alarm and the LED next to the “PREHEAT/ END ALARM” button will flash. This alerts the operator to closely monitor the run’s completion. This method performs best when large samples are processed at high temperatures. When small samples or low temperatures are used, the alarm may signal prior to the end of evaporation. The audible alarm may be canceled by pressing the “PREHEAT/ END ALARM” button. The LED will continue to flash until the “STOP” button is pressed. If the button is pressed again, the audible alarm will become active again.

RS-232 Communications

Some RapidVaps are equipped with RS-232 communications capabilities. This hardware and software allows a user to perform all the front panel functions from a standard RS-232 link. Communications will be at 4800 baud, no parity, 8 bit word, 1 stop bit, and a 3-wire interface (TXD, RXD and circuit common). The RS-232 link will be duplex or two-way, that is, it will allow the RapidVap Basic and N_2 models to be controlled externally (incoming commands) as well as provide status information coming out of the RapidVap (outgoing status). All communications will be done in standard ASCII format using the programming syntax below.

RS-232 Programming Syntax

The RapidVap only responds to commands sent by the connected computer or terminal – it does not send out commands on its own. The programming syntax has two forms:

1. **# [command abbreviation letter] [value]**; when the command requires a numeric value.
2. **# [command abbreviation letter]**; when the command does not require a numeric value.

When the programming syntax contains a numeric value, it will change the operation of the RapidVap. When the programming syntax does not contain a numeric value, the RapidVap will respond with its current status for that command value.

Note that the lead-in character is "#" while the "[ ]" (brackets) are shown only to separate parameters for ease of understanding. These brackets will not be used in the actual ASCII command string. Finally, the ";" is used to indicate the end of a command. Also note that '\n' indicates a newline character.

#R[x];	x=0 for stop, x=1 for run and x=2 for pre-heat, will get a x'\n' response for confirmation; when a "#R;" with no "[x]" is sent, the RapidVap will respond 0, 1 or 2
#S[xxx];	Selects the vortex speed of program 9 from 0% or 12% to 100%, will get a xxx;yyy'\n' response for confirmation. (xxx:speed setpoint, yyy:actual speed)
#T[xxx];	Selects the HEAT TEMPERATURE SET POINT of program 9 from 30 to 100 (C), will get a xxx;yyy'\n' response for confirmation. (xxx:temperature setpoint, yyy:actual temperature); by entering "#T0;", the heat will be set to OFF

#t[xxxx]	Selects the TIME SET POINT of program 9 from 1 to 999 minutes, and 1000 for no stopping (will run continuously), will get a xxxx;yyyy'\n' response for confirmation. (xxxx:time setpoint, yyyy:time left)
#V[xxxx];	Selects the VACUUM SET POINT (if the RapidVap is a Vacuum model) of program 9 from 1 to 1000 mBar, will get a xxxx;yyyy'\n' response for confirmation. (xxxx:vacuum setpoint, yyyy:actual vacuum)
#H[xxx];	Selects the PRE-HEAT SET POINT of program 9 from 30 to 100 C, will get a xxx;yyy'\n' response for confirmation.(xxx:pre-heat setpoint, yyy:actual temperature)
#L[x];	KEY LOCKED when x=1 and UNLOCKED when x=0, will get a x'\n' response for confirmation
#N[x]	elects the N2 VALVES (if the RapidVap is an N_2 model) of program 9 from 0,2,4,6,8, will get a x'\n' response for confirmation
#M[x];	x=1 will mute the audio alarm; x=0 will allow the audio alarm to work normally
#E;	The RapidVap will respond to this command with a numeric value as follows :'"1"'=indicates an endpoint has been reached; "0"=endpoint has not been reached
#e;	The RapidVap will respond to this command with a numeric value as follows: 0=all functions are normal; "1"=lid is open; "2"=communication problem; "3" and later numbers will be established later as specific error messages

Note: When controlling the RapidVap using the RS-232 link, all control parameters will be entered into program 9.

Note: All of the above commands can be sent with no numeric value, that is '#[command];' (without value) to read out the setpoint and actual value without changing the setpoint.

Note: There is no command for the vacuum release button on the front panel since this button is momentary in nature – the "#V0000;" command will bleed the vacuum chamber to atmospheric pressure.

Note: The above commands can be sent at a maximum rate of one command per second.

RS-232 Hardware Required

The connecting cable, Labconco #7484800 is supplied with the unit and is wired as shown below.

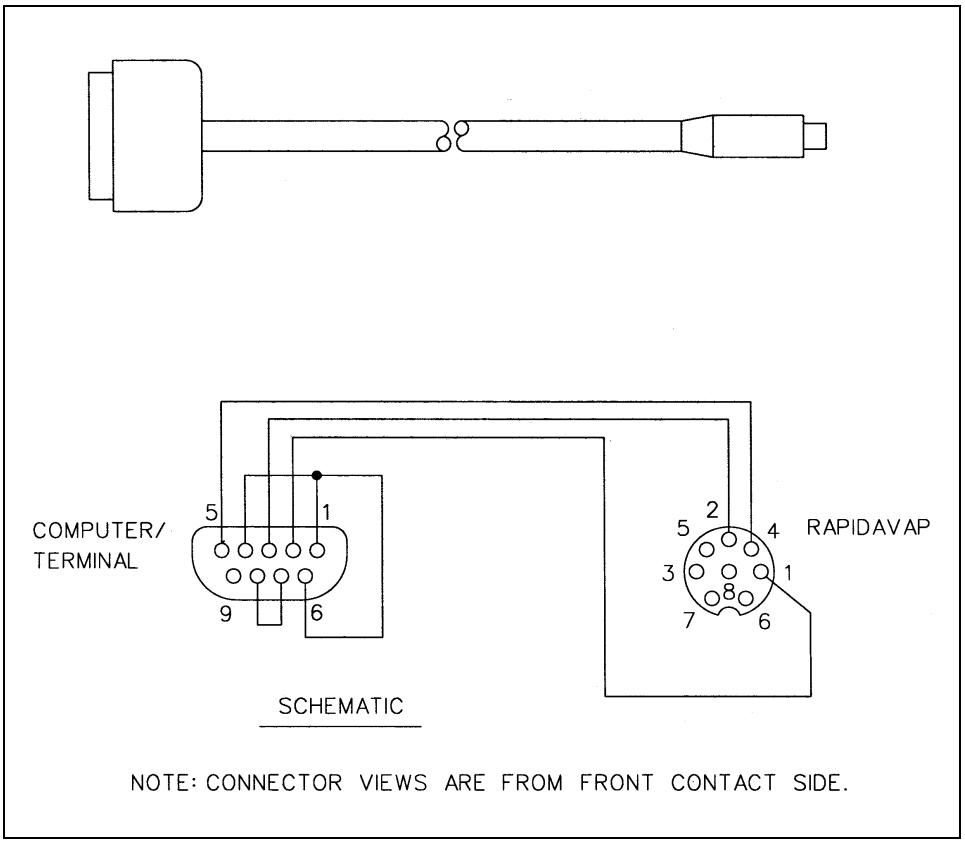

CHAPTER 5
MAINTAINING YOUR RAPIDVAP

Under normal operation, the RapidVap requires little maintenance. The following maintenance schedule is recommended:

As needed:

1. Clean up all spills; remove liquids from chamber.
2. Clean lid and gasket using soft cloth, sponge or chamois and a mild, non-abrasive soap or detergent.

Weekly:

V

1. If the vacuum pump contains oil, check the condition and level. If the oil level is low, add oil. If the oil contains excessive amounts of moisture, detected by a cloudiness in the oil, it will be necessary to change the oil. For further information regarding procedures for changing the vacuum pump oil, refer to the vacuum pump manufacturer's instructions. To expel small amounts of water that may have accumulated in the pump oil, periodically operate the vacuum pump against a dry, leak-tight system. The gas ballast must be open.

Monthly:

1. The rubber components on the RapidVap may eventually deteriorate and require replacement. The effective life of rubber parts depends upon both their usage and the surrounding environment. Check all rubber hoses and gaskets and replace any that show signs of hardening, permanent set or deterioration.
2. Using a soft cloth, sponge or chamois and a mild, non-abrasive soap or detergent, clean the glass lid.

3. Using a soft cloth, sponge, or chamois and a mild, non-abrasive soap or detergent, clean the exterior surfaces of the unit. Liquid spray cleaners and polishes may be used on the exterior surfaces. Do not use solvents to remove stains from the exterior surfaces as they may damage the finish.
4. All weekly activities.

CHAPTER 6
MODIFYING YOUR RAPIDVAP

The configuration of your RapidVap may need to be changed to accommodate your needs. For example, you may want to change the sample size you are running so you will need to change the block or you may want to add a lid heater to eliminate condensation inside the lid. Read this chapter to learn how to:

- change blocks.
- install a lid with heater.

Changing the Sample Blocks

If it is necessary to change from one sample size to another, it may be necessary to change the block. Refer to *Appendix D: RapidVap Accessories* for available sample blocks.

First, using a 7/16" socket (RapidVap Vacuum and RapidVap N_2), remove the three nuts and washers on the top of the existing block. The RapidVap N_2/48 requires a 9/16" socket to remove the three manifold guides that secure the block. Lift the block out of the chamber. Note the asymmetric hole pattern of the three mounting holes. Apply a small amount of heat transfer grease supplied with the RapidVap to the end of the temperature sensor probe that extends up from the bottom of the chamber.

Position the block over the three studs in the chamber. Install the flat washers and nuts or manifold guide rods. Tighten securely.

Installing the Optional Lid Heater

V

If a Lid Heater is to be added by the user, first disconnect the main power cord to the RapidVap. Then remove the existing lid by removing the two screws that hold either the RH or LH hinge pivot support bracket. Remove the bracket and then slide the lid assembly off of the other bracket. Install the new lid with the heater attached by reversing the process. Plug the jack attached to the lid heater into the receptacle on the back of the RapidVap. The lid heater will operate any time the main power switch is on.

CHAPTER 7
TROUBLESHOOTING

Refer to the following if your RapidVap fails to operate properly. If the suggested corrective actions do not solve your problem, contact Labconco for additional assistance. The following failure codes may appear on the display when problems are sensed by the internal self check routine.

DISPLAY ERROR CODE	CAUSE	CORRECTIVE ACTION
Top Temp Sensor	Top sensor failure	Replace top sensor assembly.
	Connection failure	Repair connection.
Bottom Temp Sensor	Bottom sensor failure	Replace bottom sensor assembly.
	Connection failure	Repair connection.
Vacuum Sensor	Sensor failure	Replace sensor assembly.
	Connection failure	Repair connection.
Lid Opened	Lid open	Close lid.
	Switch failure	Replace switch.
	Connection failure	Repair connection.

DISPLAY ERROR CODE	CAUSE	CORRECTIVE ACTION
Mem Fail – Push Prog	Memory failure	Push program button.
	New memory IC chip	Push program button.
	Bad memory IC chip	Call Labconco – Replace IC chip or control PCB.
Motor Error	Stalled condition	Turn power off. Try to restart after one minute. Call Labconco if error message remains.
	Excessive speed detected, i.e. >120%	Turn power off. Try to restart after one minute. Call Labconco if error message remains.
	Defective motor	Turn power off. Try to restart after one minute. Call Labconco if error message remains.

Other corrective actions for potential problems are as follows:

PROBLEM	CAUSE	CORRECTIVE ACTION
Unit will not operate	Unit not connected to electrical power	Connect unit to proper electrical receptacle.
	Circuit breaker blown	Correct electrical problem and reset circuit breaker by pressing button.
	Lid open	Close lid.
Excessive vibration	Sample tubes not located symmetrically in block	Reposition sample tubes.
	Sample block loose	Tighten all three mounting screws.
	Sample block not installed	Install sample block.
Sample odor in lab	Vent hose exhausting into lab area	Redirect hose to fume hood.
	Inoperable blower (RapidVap N_2)	Replace blower.

PROBLEM	CAUSE	CORRECTIVE ACTION
Sample in bottom of chamber	Gas pressure too high (RapidVap N_2)	Reduce pressure.
	Vortex speed too high	Reduce speed.
	Condensation forming inside lid (RapidVap Vacuum)	Install lid heater. See page 36.
Poor recovery rates	Sample going to dryness (RapidVap N_2)	Program RapidVap N_2 to prevent dryness.
	Sample sloshing out of tube	Decrease vortex speed.
	Heat setting is too high	Decrease heat.
Evaporation rate is reduced	Gas supply depleted (RapidVap N_2)	Replenish gas.
	Heater inoperable	Contact Labconco.
	Vacuum pump failure (RapidVap Vacuum)	Check pump.
No vacuum poor vacuum (RapidVap Vacuum)	Pump not on	Turn on pump.
	Control valve open	Check control valve.
	Leaks in lines or connectors	Locate and repair.
	Foreign material on lid gasket	Clean gasket and lid.
	Vacuum pump oil low	Add oil.
	Excessive contamination in vacuum pump oil	Replace oil.
	Pump not connected to RapidVap	Connect hose and power cord.

PROBLEM	CAUSE	CORRECTIVE ACTION
No gas flow (RapidVap N_2)	Gas depleted	Install new supply of gas.
	Sample position not activated	Activate position per page 30.
	Nozzle clogged	Unplug nozzle with fine wire.
	Valve inoperable	Contact Labconco
Gas flows continuously	Valve inoperable	Contact Labconco
	Control inoperable	Contact Labconco

APPENDIX A
RAPIDVAP VACUUM AND RAPIDVAP N_2 COMPONENTS

The following pages list components that are available for your RapidVap. The parts shown are the most common replacement parts. If other parts are required, contact Product Service.

RapidVap Vacuum and RapidVap N_2 Components

Item	Quantity	Part No.	Description
1	1	13023-00	Switch, Power
2	4	74953-00	Foot
3	1	79167-00	Fan Cooling
4	1	74838-00	PCB, Main (RapidVap Vacuum)
4A	1	74838-03	PCB, Main (RapidVap N_2 & RapidVap N_2/48)
4B	1	74838-04	PCB, Main (RapidVap Vacuum w/RS232)
4C	1	74838-05	PCB, Main (RapidVap N_2 & RapidVap N_2/48 w/ RS232)
5	8	74887-00	Isolator, Upper
6	8	74915-00	Isolator, Lower
7	1	13364-00	Cord, Power (115V)
7A	1	13365-00	Cord, Power (230V)
8	1	12926-00	Triac
9	1	79176-00	Diode Bridge
10	1	78252-00	Belt
11	1	12111-00	Motor
--	1	13444-06	Fuse, 12A, Type T, Slow Blow (Not Shown)

Appendix A: RapidVap Vacuum & RapidVap N_2 Components

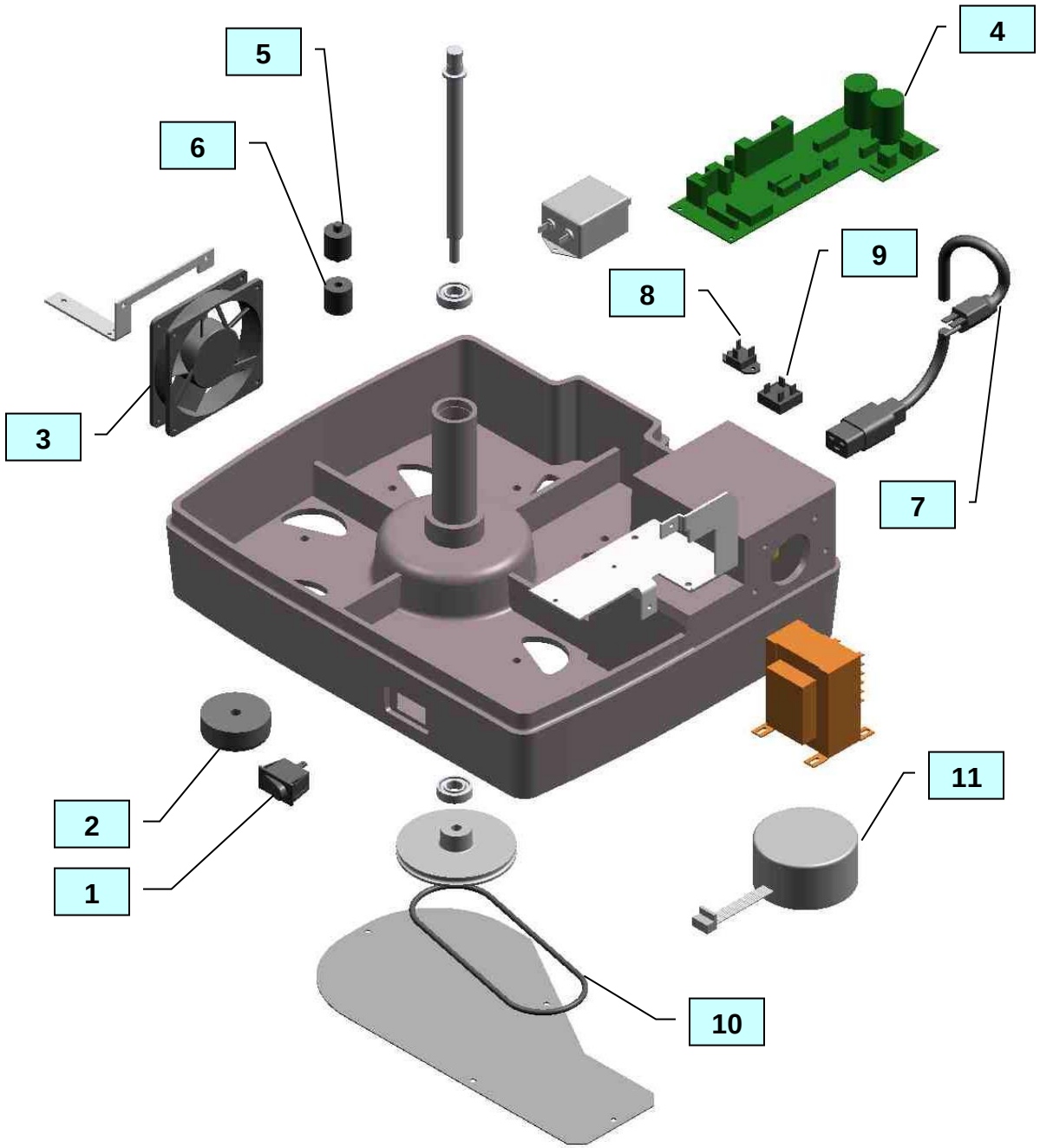

RapidVap Vacuum Components

Item	Quantity	Part No.	Description
21	1	74917-00	Temperature Sensor, Lower
22	1	74870-00	Temperature Sensor, Upper
23	1	74916-00	Vacuum Sensor
24	2	74882-00	Spring, Latch
25	2	74880-00	Latch
26	6	19271-05	Washer, Latch
27	2	74883-00	Knob, Latch
28	3	19092-21	Nut, Block
29	3	19116-00	Washer, Block
30	3	79046-01	Stud, Block
31	1	74979-00	Trim Ring
32	1	15532-00	Hose, Exhaust
33	1	74847-00	Shield, Lid
34	1	74846-00	Lid
34A	1	74844-00	Lid With Heater
35	1	79759-01	Thermal Fuse
36	1	73449-00	Valve, Vacuum
37	1	74920-02	PCB, Display/Control
38	1	74926-00	Label, Control Panel
39	1	13061-00	Relay, Vacuum Pump
--	1		Fuse, Main Vacuum PCB, 2A, Type T, Slow Blow (Not Shown)

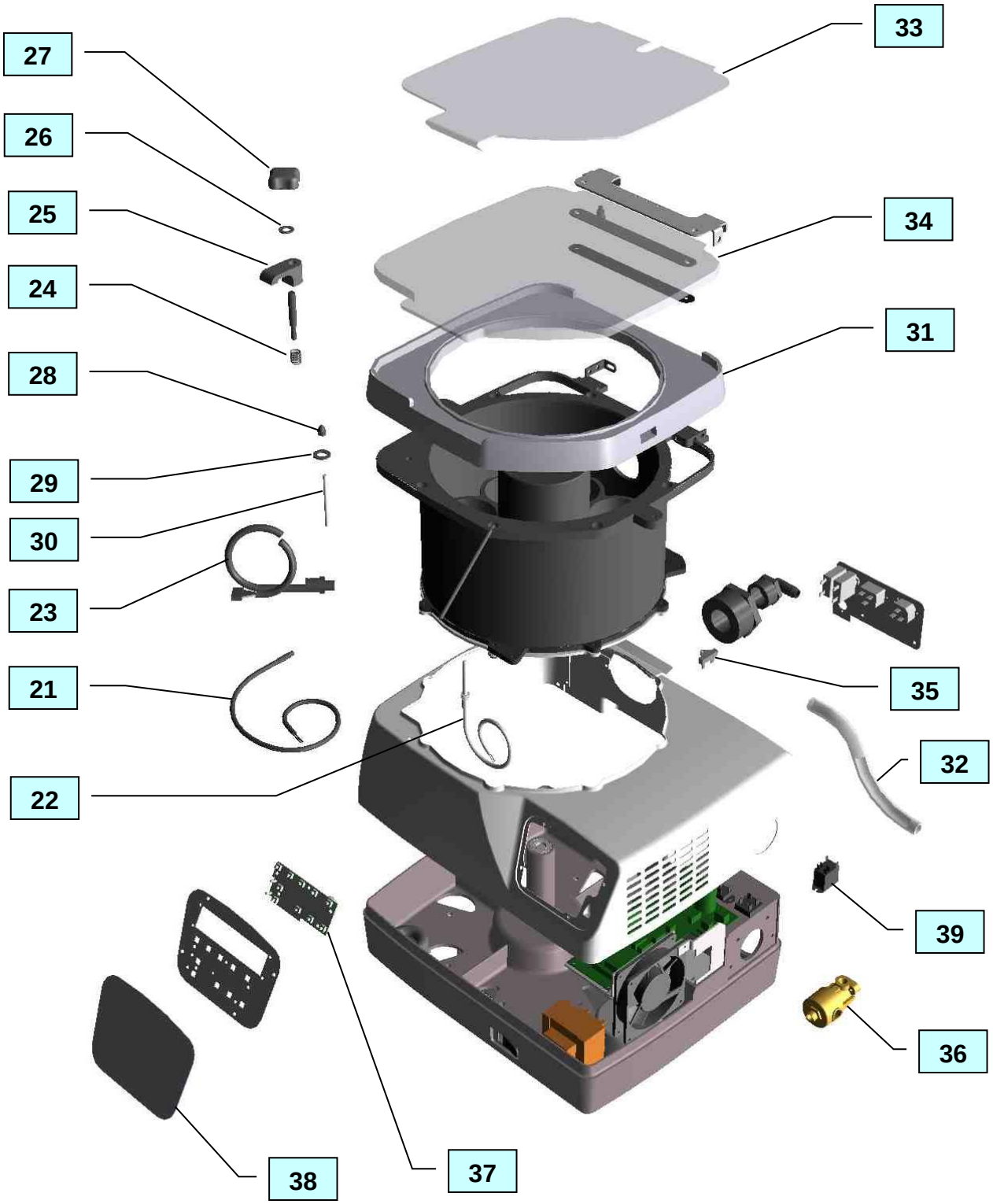
27
26
25
24
28
29
30
23
21
22
33
34
31
35
32
39
36
38
37

RapidVap N_2 and RapidVap N_2/48 Components

Item	Quantity	Part No.	Description
51	1	74917-00	Temperature Sensor, Lower
52	1	74870-00	Temperature Sensor, Upper
53	2	74882-00	Spring, Latch
54	2	74880-00	Latch
55	6	19271-05	Washer, Latch
56	2	74883-00	Knob, Latch
57	3	19092-21	Nut, Block (RapidVap N_2)
57A	3	74488-00	Guide Stud (RapidVap N_2/48)
58	3	19116-00	Washer, Block
59	3	79046-01	Stud, Block
60	1	74845-00	Lid (RapidVap N_2)
60A	1	74497-00	Lid (RapidVap N_2/48)
61	1	74979-00	Trim Ring
62	1	79131-01	Hose, Exhaust Short
63	1	74889-01	Valve Assembly, Nitrogen
64	1	79131-02	Hose Exhaust Long
65	1	79096-00	Blower, Exhaust
66	1	74920-02	PCB, Display/Control
67	1	74922-00	Label, Control Panel
68	1	79759-01	Thermal Fuse
--	1	13444-03	Fuse, Exhaust Blower, 4A, Type T, Slow Blow (Not Shown)

Appendix A: RapidVap Vacuum & RapidVap N_2 Components

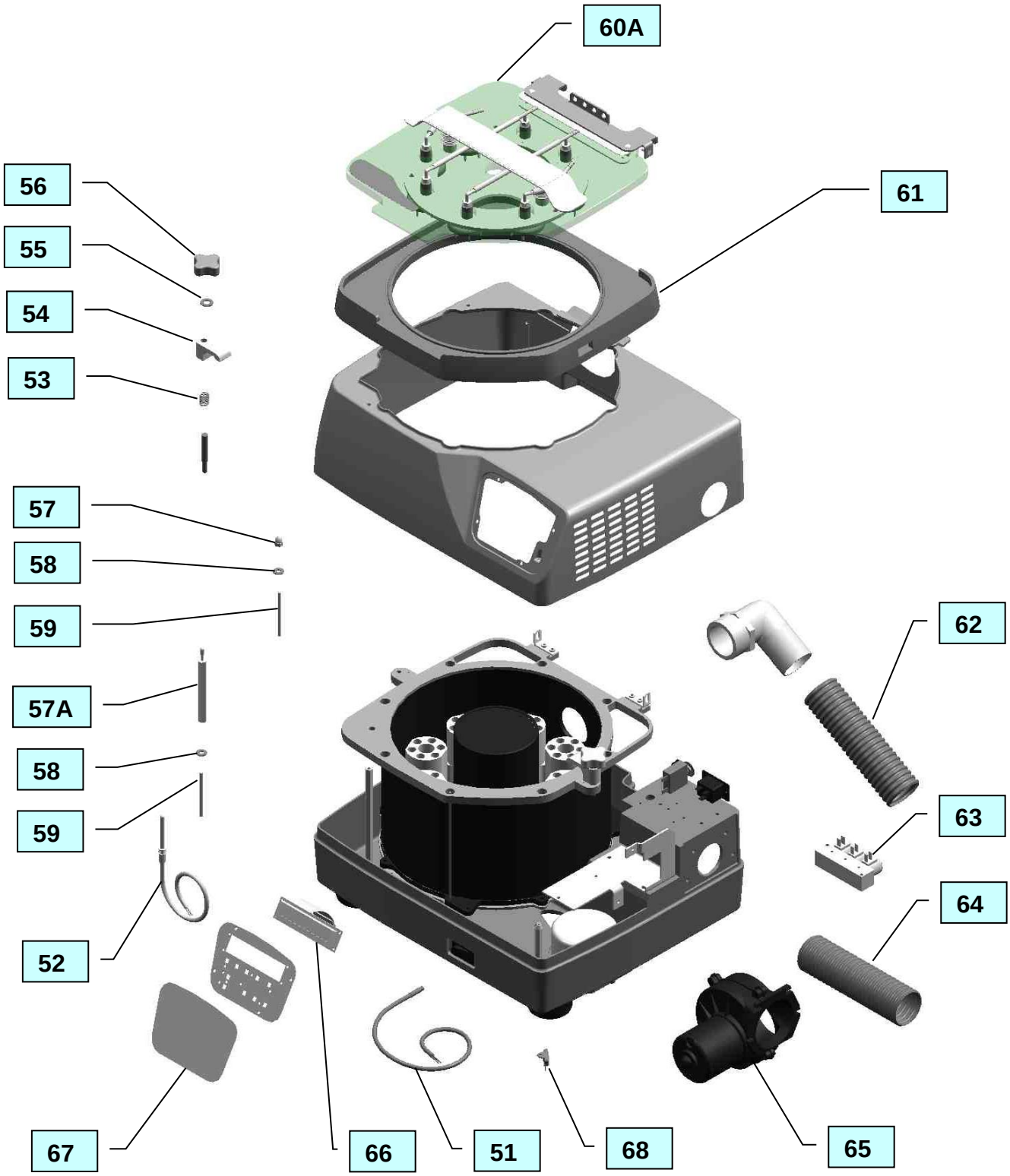

APPENDIX B
RAPIDVAP DIMENSIONS

RapidVap Vacuum

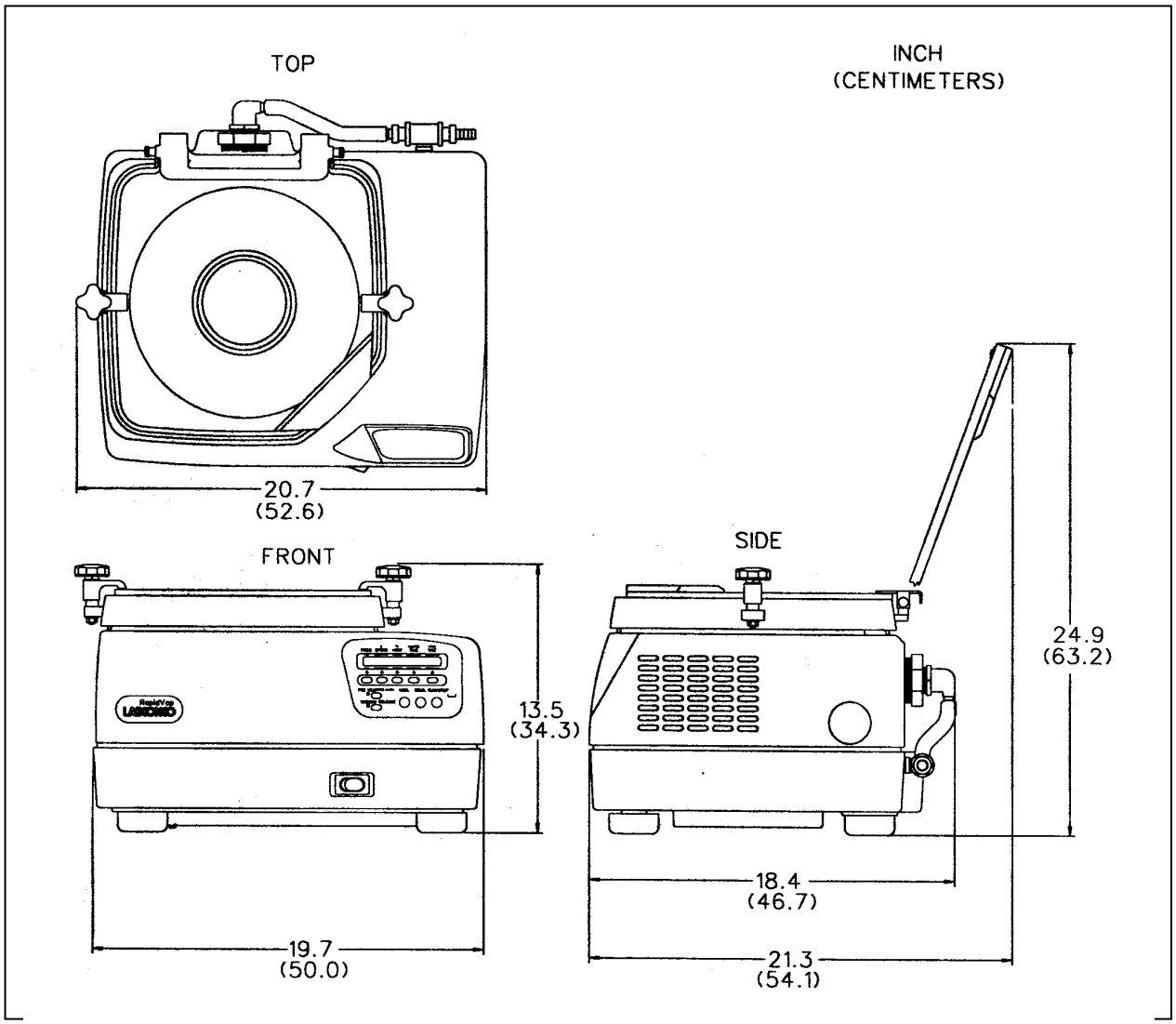

RapidVap N_2

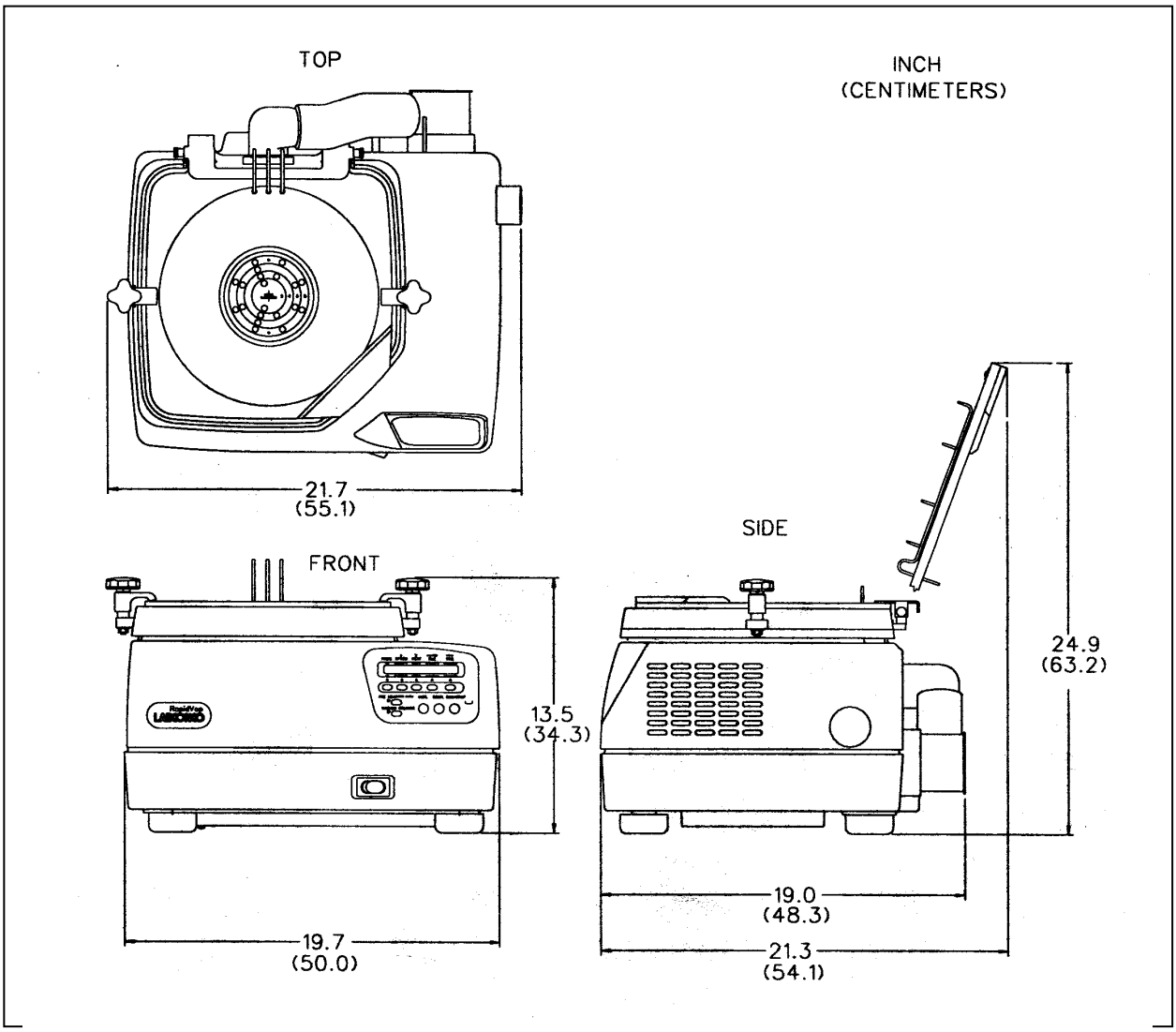
TOP
INCH
(CENTIMETERS)
21.7
(55.1)
SIDE
FRONT
24.9
(63.2)
13.5
(34.3)
19.0
(48.3)
19.7
(50.0)
21.3
(54.1)

APPENDIX C
RAPIDVAP SPECIFICATIONS

This Appendix contains technical information about the RapidVap including specifications, environmental operations conditions, wiring diagrams and evaporation rates.

Electrical Specifications

- Nominal amperage for 115V RapidVap Vacuum (model 79000-00 & 79000-10) excluding vacuum pumps: 8A
  Maximum amperage with vacuum pump: 16A
- Nominal amperage for 230V RapidVap Vacuum (model 79000-01 & 79000-11) excluding vacuum pumps: 4A
  Maximum amperage with vacuum pump: 8A
- Nominal amperage for 115V RapidVap Vacuum (model 79000-02 & 79000-12) with Lid Heater excluding vacuum pump: 8.6A
  Maximum amperage with vacuum pump: 16A
- Nominal amperage for 230V RapidVap Vacuum (model 79000-03 & 79000-13) with Lid Heater excluding vacuum pump: 4.3A
  Maximum amperage with vacuum pump: 8A
- Nominal amperage for 115V RapidVap N_2 (model 79100-00, 79100-10, 79100-12 & 79100-14): 8A
- Nominal amperage for 230V RapidVap N_2 (model 79100-01, 79100-11, 79100-13 & 79100-15): 4A
- Frequency (all models): 50/60 Hz
- Phase: Single
- Heater power: 1000 watts
- Lid heater power: 40 watts

Environmental Conditions

- Indoor use only.
- Maximum altitude: 6562 feet (2000 meters).
- Ambient temperature range: 41° to 104°F (5° to 40°C).
- Maximum relative humidity: 80% for temperatures up to 88°F (31°C), decreasing linearly to 50% relative humidity at 104°F (40°C).
- Main supply voltage fluctuations not to exceed ±10% of the nominal voltage.

- Transient overvoltages according to Installation Categories II (Overvoltage Categories per IEC 1010). Temporary voltage spikes on the AC input line that may be as high as 1500V for 115V models and 2500V for 230V models are allowed.
- Used in an environment of Pollution degrees 2 (i.e., where normally only non-conductive atmospheres are present). Occasionally, however, a temporary conductivity caused by condensation must be expected, in accordance with IEC 664.

N

Nitrogen Consumption

- Gas flow RapidVap N_2 with 8 active nozzles:
  0.55 SCFM @ 12 psi
  0.41 SCFM @ 6 psi

- Gas flow RapidVap N_2/48with 48 active nozzles:
  3.5 SCFM @ 20 psi
  2.5 SCFM @ 10 psi

Wiring Diagram (115V Models)

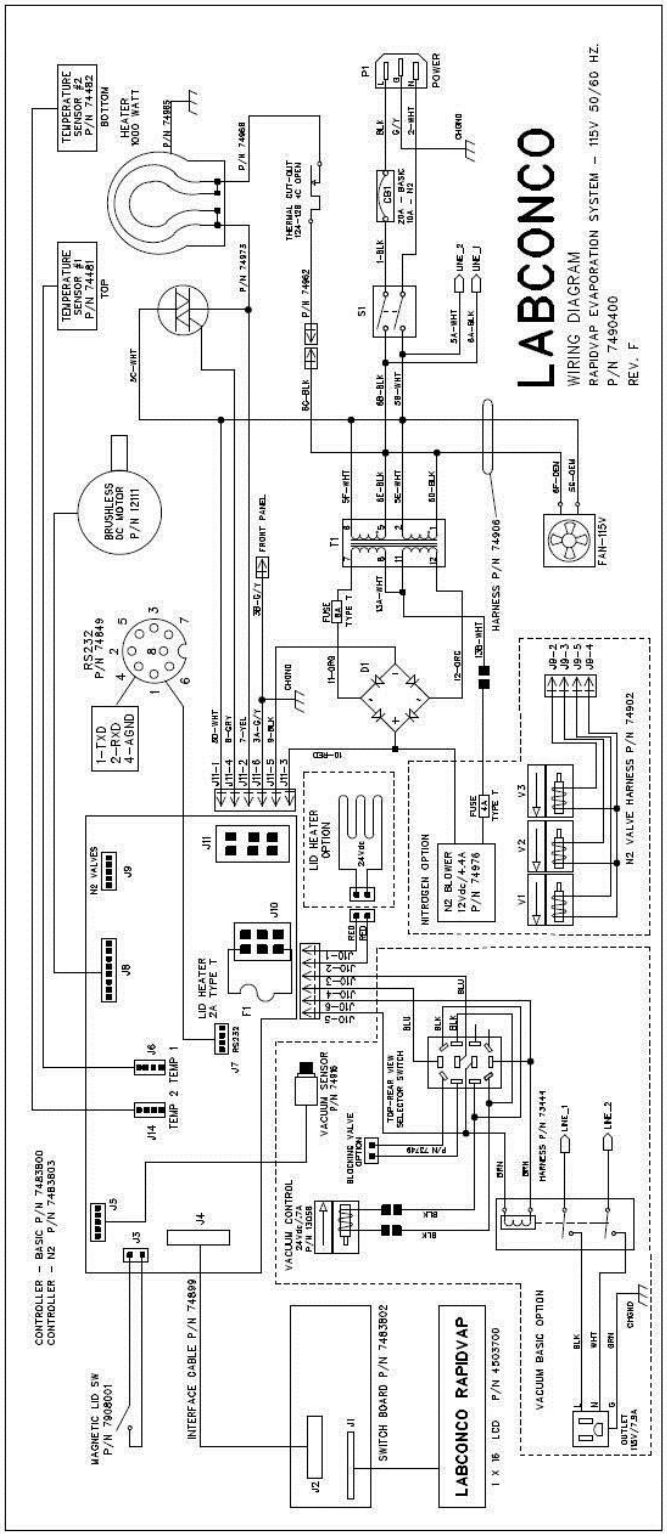

Wiring Diagram (230V Models)

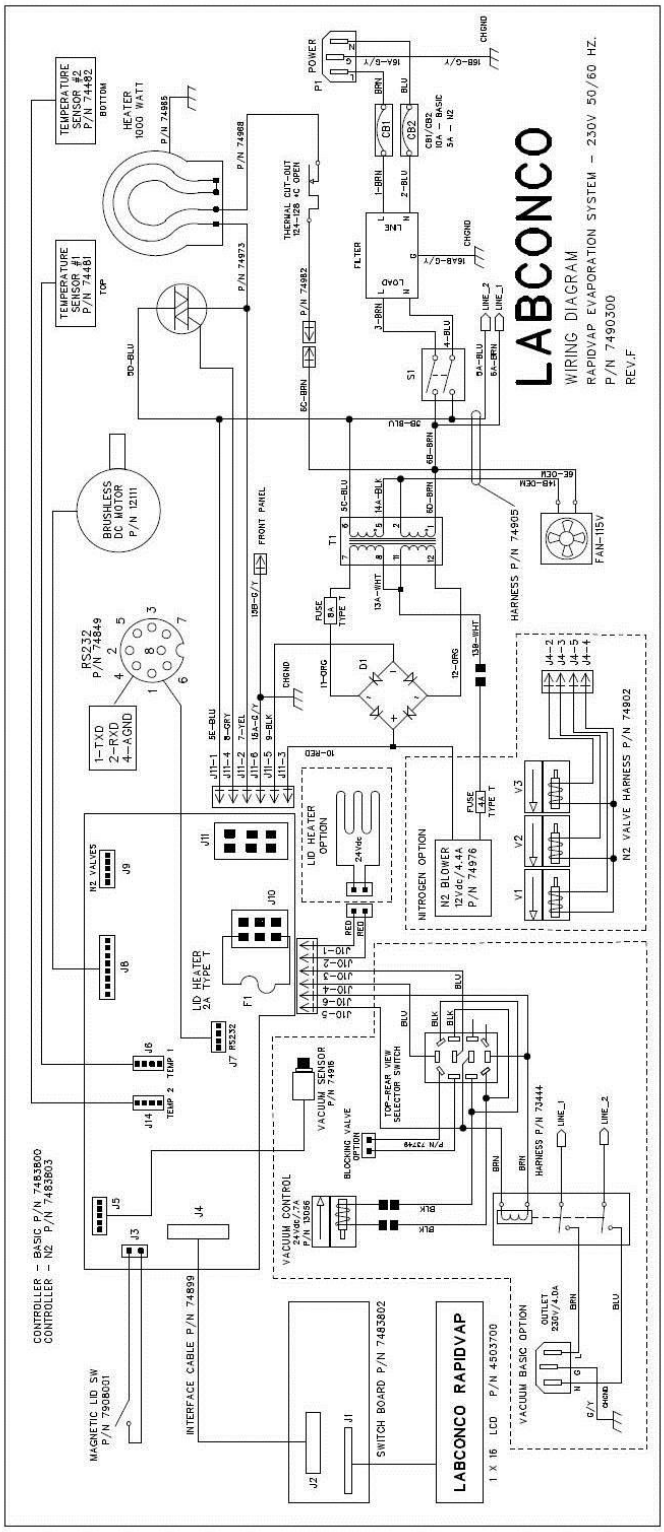

Evaporation Rates

RapidVap Vacuum Models

V

The following tables show the approximate time to evaporate various solvents in 75mm and 16mm sample tubes when the sample block is fully loaded. Other sample blocks are available for different size tubes. If they are used or if a different number of samples is run at one time, the evaporation times can be estimated from these charts or determined experimentally.

Evaporation Time – 75 mm dia. Sample Tube
(Time in Minutes)

Solvent:	Methylene Chloride	Toluene	Acetonitrile	Water
Block Preheat & Block Set Point Temperature:	50°C	80°C	75°C	80°C
Vacuum:	250 mbar	133 mbar	167 mbar	133 mbar
Starting Volume				
300ml	62	90	102	402
250	56	72	84	345
200	49	66	71	289
150	42	57	60	239
100	36	33	49	189
50	22	40	37	95

Number of samples: 8
Vortex speed: 28%
Vacuum pump: Labconco model – 79249-00
Rated free air flow – 88 L/min
Max. attainable vacuum – 31 mbar

V

Evaporation Time – 16 mm dia. Sample Tube
(Time in Minutes)

Solvent:	Methylene Chloride	Toluene	Acetonitrile	Water
Block Preheat & Block Set Point Temperature:	50°C	80°C	75°C	80°C
Vacuum:	200 mbar	200 mbar	330 mbar	133 mbar
Starting Volume				
10 ml	18	25	25	119
8	14	20	22	101
6	10	14	17	72
4	8	12	13	50
2	4	6	7	26

Number of samples: 69
Vortex speed: 95%
Vacuum pump: Labconco model – 79249-00
Rated free air flow – 88 L/min
Max. attainable vacuum – 31 mbar

RapidVap N_2 Models

N

The following tables indicate the approximate time required to evaporate various common solvents. Tables A and B show the average time required to evaporate 8 samples from the selected beginning volume to a level where the solvent is at the top of the Cool-Zone stem. Tables C shows the average time to evaporate various solvents in different length Cool-Zone stems. It shows the average time for solvents to evaporate from the top of the stem to the indicated remaining volume when 8 vials are run simultaneously. The following example illustrates the use of the charts:

> Assume that a starting volume of 300 ml methylene chloride is placed in a 600 ml sample vial with a 1.5 ml stem. The vial is covered with a cap. The desired endpoint volume is 0.5 ml. From Table A, the time to evaporate to the top of the stem is 59 minutes. From Table C, the time to evaporate from the top of the stem to 0.5 ml is 17 minutes. Adding the two times together, the total time to evaporate 300 ml of methylene chloride to 0.5 ml in a sample tube with a 1.5 ml stem is approximately 76 minutes.
>
> If fewer than eight samples are run at a time, the time to evaporate will become shorter.

N

Table A

Evaporation Time in Upper Portion of Sample Vial (600 ml Sample Tubes) (Time in Minutes)

Solvent:	Methylene Chloride	Ethyl Acetate	Hexanes	Acetone	Toluene	Water
Block Preheat & Block Set Point Temperature:	40°C	75°C	70°C	55°C	100°C	95°C
Starting Volume						
450 ml	91	82	54	90	109	623
400	80	65	52	75	80	531
350	69	56	35	64	69	437
300	59	48	29	54	60	379
250	51	40	22	45	50	323
200	43	33	19	38	41	270
150	36	26	16	31	32	221
100	28	19	11	23	23	173
50	18	12	7	14	13	106

Number of samples: 8
Nitrogen pressure: 10 psi at volumes 0 thru 300 ml
(see Note 1) 5 psi at volumes above 300 thru 350 ml
4 psi at volumes above 350 thru 400 ml
2 psi at volumes above 400 thru 450 ml
Vortex speed: 70% at volumes 0 thru 300 ml
(see Note 1) 36% at volumes above 300 thru 450 ml
Sample tubes covered with caps

Note 1: Even though the RapidVap N_2 is capable of processing starting volumes as high as 450 ml using the 600 ml sample vial, its optimum volume is 300 ml. Above 300 ml, the vortex speed must be reduced and the nitrogen pressure must be decreased to prevent the sample from splashing out. This data for starting volumes over 300 ml was generated by starting the evaporation at reduced levels of nitrogen pressure and vortex speed. As the solvent evaporated, the nitrogen pressure and vortex speed were increased.

N

Table B

Evaporation Time in Upper Portion of Sample Vial (600 ml Sample Tubes) (Time in Minutes)

Solvent:	Methylene Chloride	Ethyl Acetate	Hexanes	Acetone	Toluene	Water
Block Preheat & Block Set Point Temperature:	40°C	75°C	70°C	55°C	100°C	95°C
Starting Volume						
450 ml	58	56	33	68	75	420
400	53	48	29	61	63	352
350	48	40	24	54	52	321
300	41	35	21	47	45	266
250	35	31	19	43	40	230
200	30	26	16	38	35	193
150	25	22	14	34	28	153
100	19	17	11	29	22	120
50	10	9	7	16	15	68

Number of samples: 8
Nitrogen pressure: 10 psi at volumes 0 thru 300 ml
(see Note 1) 5 psi at volumes above 300 thru 350 ml
4 psi at volumes above 350 thru 400 ml
2 psi at volumes above 400 thru 450 ml
Vortex speed: 70% at volumes 0 thru 300 ml
(see Note 1) 36% at volumes above 300 thru 450 ml
Sample tubes: Not covered with caps

N

Table C

Evaporation Rate in Cool-Zone Stem
(600 ml Sample Tubes) (Time in Minutes)

	Solvent:	Methylene Chloride	Ethyl Acetate	Hexanes	Acetone	Toluene	Water
	Block Preheat & Block Set Point Temp:	40°C	75°C	70°C	55°C	100°C	95°C
Glassware	Ending Volume						
0.5 ml Stem	0.5	4	4	3	4	5	42
	Dry	10	9	7	9	10	78
1.5 ml Stem	1.5	4	4	2	3	5	23
	1.0	9	7	5	7	9	43
	0.5	17	13	8	12	15	75
	Dry	31	24	16	22	26	120
2.0 ml Stem	2.0	3	3	2	3	4	28
	1.0	17	11	8	15	14	80
	Dry	64	34	26	47	50	201
3.0 ml Stem	3.0	4	4	3	3	5	34
	2.0	20	12	10	16	17	76
	1.0	57	34	25	50	40	170
	Dry	128	81	52	108	89	339

Number of samples: 8
Vortex speed: 70%
Nitrogen pressure: 10 psi
Sample tubes: Covered or not covered with caps

Glassware Used:
0.5 ml (PN 79259-00) .77 in (1.9 cm) Long Stem
1.5 ml (PN 79139-00) 1.37 in (3.5 cm) Long Stem
2.0 ml (PN 79137-00) 1.62 in (4.1 cm) Long Stem
3.0 ml (PN 79135-00) 2.25 in (5.7 cm) Long Stem

RapidVap N_2/48 Models

N

The following tables show the approximate time to evaporate various solvents in 12mm and 20mm sample tubes when the sample block is fully loaded. Other sample blocks are available for different size tubes. If they are used or if a different number of samples is run at one time, the evaporation times can be estimated from these charts or determined experimentally. Evaporation rates may vary from tube to tube.

Evaporation Time RapidVap N_2/48 Models (12 mm Sample Tubes) (Time in Minutes)

Solvent:	Methylene Chloride	Toluene	Acetonitrile	Methanol	Hexane/ Ethyl Acetate 75:25	Hexane/ Ethyl Acetate 50:50
Block Preheat & Block Set Point Temp:	40°C	80°C	75°C	40°C	40°C	40°C
Starting Volume 2 ml	6	8	8	18	5	5

Number of samples: 48
Vortex speed: 100%
Nitrogen pressure: 8 psi

Evaporation Time RapidVap N_2/48 Models
(20 ml Sample Tubes) (Time in Minutes)

Solvent:	Methylene Chloride	Toluene	Acetonitrile	Methanol	Hexane/ Ethyl Acetate 75:25	Hexane/ Ethyl Acetate 50:50
Block Preheat & Block Set Point Temp:	50°C	80°C	75°C	40°C	40°C	40°C
Starting Volume						
10 ml	17	23	24	49	18	20
8	14	21	21			
6	11	18	18			
4	9	15	14			
2	5	9	8			

Number of samples: 48
Vortex speed: 100%
Nitrogen pressure: 20 psi

APPENDIX D
RAPIDVAP ACCESSORIES

V

This following accessories are available for the RapidVap Vacuum model.

PART #	DESCRIPTION
7491300	**Block.** 110-12 mm dia. tubes.
7485800	**Block.** 110-13 mm dia. tubes.
7491400	**Block.** 69-16 mm dia. tubes.
7496300	**Block.** 69-15 ml centrifuge tubes.
7496400	**Block.** 26-28 mm scintillation tubes.
7494500	**Block.** 8-600 ml tubes. Order tubes from Labconco.
7486400	**Block.** 8-170 ml tubes. Order tubes from Labconco.
	Block. Special orders (size and number of tubes). Contact Labconco.
7909200	**Sample Tube – Flat Bottom.** Borosilicate glass. 600 ml capacity. Package of one (1).
7913408	**Sample Tube – Flat Bottom.** Borosilicate glass. 600 ml capacity. Package of eight (8).

PART #	DESCRIPTION
7927000	**Sample Tube – Flat Bottom.** Borosilicate glass. 170 ml capacity. Package of one (1).
7927108	**Sample Tube – Flat Bottom.** Borosilicate glass. 170 ml capacity. Package of eight (8).
7393000	**Vacuum Pump.** Diaphragm pump - corrosion resistant. 115V, 60 Hz, 4.0 amps, single phase. 63 liters per minute, 1.5 mbar max vacuum.
7393001	**Vacuum Pump.** Diaphragm pump - corrosion resistant. 230V, 50/60 Hz, 3.0 amps, single phase. 63 liters per minute, 1.5 mbar max vacuum.
7587000	**Vacuum Pump.** Scroll pump. 115 VAC, 50/60 Hz, 10 amps, single phase. 189/195 liters per minute, 7 x 10^{-3} mbar max vacuum. Requires ½ fitting 1472701.
7587002	**Vacuum Pump.** Scroll pump. 230 VAC, 50/60 Hz, 6 amps, single phase. 189/195 liters per minute, 7 x 10^{-3} mbar max vacuum. Requires ½ fitting 1472701.
7587300	**Silencer.** For scroll pumps 7587000 and 7587002.
1472700	**Fitting.** For scroll pumps 7587000 and 7587002. For ½ I.D. hose.
7815300	**Secondary Trap Canister.** Includes stand and fittings. Requires an insert suitable for the application.
7814800	**Acid Trap Insert.** Installs inside secondary trap canister. Contains acid neutralizing desiccant.

PART #	DESCRIPTION
7814900	**Moisture Trap Insert.** Installs inside secondary trap canister. Contains desiccant.
7815000	**Radioisotope Trap Insert.** Installs inside secondary trap canister. Contains activated charcoal.
7815200	**Solvent Trap Insert.** Installs inside secondary trap canister. Contains molecular sieve.
7538000	**Secondary Vacuum Trap.** 9 ¾" h x 7 7/8" diameter with ¾" vacuum connections. Volume of inner pot holds 2.85 liters of dry ice and alcohol. Ice trapping capacity is over 900 ml. Shipping weight 9 lbs.
7538200	**Secondary Vacuum Trap.** 9 ¾" h x 7 7/8" diameter with 1/2" vacuum connections. Volume of inner pot holds 2.85 liters of dry ice and alcohol. Ice trapping capacity is over 900 ml. Shipping weight 9 lbs.
7538400	**Secondary Vacuum Trap.** 7 7/8" h x 6 5/8" diameter with 1/2" vacuum connections. Volume of inner pot holds 1.8 liters of dry ice and alcohol. Ice trapping capacity is 200 ml. Shipping weight 5 lbs.
7486500	**Lid Heater.** Includes glass lid with heater attached.
7873400	**Liquid Trap.** Capable of trapping 2,550 ml.
7970500	**Liquid Trap.** Capable of trapping 240 ml.
7348000	**Trapping Valve.** Requires a user supplied trap.

N

The following accessories are available for the RapidVap N_2.

PART #	DESCRIPTION
7486400	**Block.** 8–170 ml tubes. Order tubes from Labconco.
7927000	**Sample Tube – Flat Bottom.** Borosilicate glass. 170 ml capacity. Package of one (1).
7927108	**Sample Tube – Flat Bottom.** Borosilicate glass. 170 ml capacity. Package of eight (8).
7926600	**Sample Tube – End Point Stem 1.5 ml.** Borosilicate glass. 170 ml capacity. Package of one (1).
7926908	**Sample Tube – End Point Stem 1.5 ml.** Borosilicate glass. 170 ml capacity. Package of eight (8).
7909200	**Sample Tube – Flat Bottom.** Borosilicate glass. 600 ml capacity. Package of one (1).
7913408	**Sample Tube – Flat Bottom.** Borosilicate glass. 600 ml capacity. Package of eight (8).
7925900	**Sample Tube – End Point Volume 0.5 ml.** Borosilicate glass. 600 ml capacity. Package of one (1).
7926008	**Sample Tube – End Point Volume 0.5 ml.** Borosilicate glass. 600 ml capacity. Package of eight (8).
7913900	**Sample Tube – End Point Volume 1.5 ml.** Borosilicate glass. 600 ml capacity. Package of one (1).
7914008	**Sample Tube – End Point Volume 1.5 ml.** Borosilicate glass. 600 ml capacity. Package of eight (8).

PART #	DESCRIPTION
7913700	**Sample Tube – End Point Volume 2 ml.** Borosilicate glass. 600 ml capacity. Package of one (1).
7913808	**Sample Tube – End Point Volume 2 ml.** Borosilicate glass. 600 ml capacity. Package of eight (8).
7913500	**Sample Tube – End Point Volume 3 ml.** Borosilicate glass. 600 ml capacity. Package of one (1).
7913608	**Sample Tube – End Point Volume 3 ml.** Borosilicate glass. 600 ml capacity. Package of eight (8).
7487600	**Rack – For 600 ml Sample Tubes.** Holds eight (8) tubes.
7486300	**Rack – For 170 ml Sample Tubes.** Holds eight (8) tubes.
7925408	**Sample Tube Cap–PTFE – For 600 ml Sample Tubes.** Package of eight (8).
7926808	**Sample Tube Cap–PTFE – For 170 ml Sample Tubes.** Package of eight (8).
7926508	**Sample Tube Cap–Polyethylene – For 170 ml Sample Tubes.** Package of eight (8).
7925500	**Sample Tube Cap–Polyethylene – For 600 ml Sample Tubes.** Package of one (1).

N

The following accessories are available for the RapidVap N_2/48.

PART #	DESCRIPTION
7482100	**Block.** 48 – 12 x 75 mm tubes.
7482200	**Block.** 48 – 13 x 100 mm tubes.
7482300	**Block.** 48 – 16 x 150 mm tubes.
7482400	**Block.** 48 – 20 x 150 mm tubes.
7494500	**Block.** 8 – 600 ml glass tubes.
7909200	**Glass Tubes for Block 74945-00.** 600 ml flat bottom. Pkg. of 1.
7913408	**Glass Tubes for Block 74945-00.** 600 ml flat bottom. Pkg. of 8.