GE Medical Systems

TechnicW
PublicWions

Direction 2115: 84−100

Revision 2

AMX−4 SchemWics
(Model 2115090 Series)

Copyright© 1994, 1995 By GenerW Electric Co.

OperWing DocumentWion

Direction 2115684−100

Revision 2

AMX−4 Schematics (Model 2115090 Series)

IMPORTANT! . . . X-RAY PROTECTION

X-ray equipment if not properly used may cause injury. Accordingly, the instructions herein contained should be thoroughly read and understood by everyone who will use the equipment before you attempt to place this equipment in operation. The General Electric Company, Medical Systems Group, will be glad to assist and cooperate in placing this equipment in use.

Although this apparatus incorporates a high degree of protection against x-radiation other than the useful beam, no practical design of equipment can provide complete protection. Nor can any practical design compel the operator to take adequate precautions to prevent the possibility of any persons carelessly exposing themselves or others to radiation.

It is important that everyone having anything to do with x-radiation be properly trained and fully acquainted with the recommendations of the National Council on Radiation Protection and Measurements as published in NCRP Reports available from NCRP Publications, 7910 Woodmont Avenue, Room 1016, Bethesda, Maryland 20814, and of the International Commission on Radiation Protection, and take adequate steps to protect against injury.

The equipment is sold with the understanding that the General Electric Company, Medical Systems Group, its agents, and representatives have no responsibility for injury or damage which may result from improper use of the equipment.

Various protective material and devices are available. It is urged that such materials or devices be used.

TABLE OF CONTENTS

SECTION	TITLE	PAGE
1	INTRODUCTION	
	General	1−1
	Assembly Designators	1−2
2	AMX−4 OVERALL WIRING MODEL 2115090 SERIES	2−1
	AMX−4 OVERALL WIRING 2115090SCH	2−3
3	AMX1 A1 A1 DISPLAY CONTROLLER 46−264982G1	3−1
	AMX1 A1 A1 DISPLAY CONTROLLER 46−264982−S	3−3
4	AMX1 A1 A2 DISPLAY 46−232832G1	4−1
	AMX1 A1 A2 DISPLAY 46−232832−S	4−3
5	AMX1 A2 A1 CONTROLLER 46−264974G2	5−1
	AMX1 A2 A1 CONTROLLER 46−264974−S	5−3
6	AMX1 A3 A1 BATTERY CHARGER 46−288786G2	6−1
	AMX1 A3 A1 BATTERY CHARGER 46−288786−S	6−3
7	AMX1 A3 A2 ROTOR CONTROLLER 46−232786G2	7−1
	AMX1 A3 A2 ROTOR CONTROLLER 46−232786−S	7−3
8	AMX1 A4 A1 1 KHZ INVERTER 46−288764G1	8−1
	AMX1 A4 A1 1 KHZ INVERTER 46−288764−S	8−3
9	AMX1 A4 A2 KVP/FIL CONTROL 46−264986G1	9−1
	AMX1 A4 A2 KVP/FIL CONTROL 46−264986−S	9−3
10	AMX1 A4 A3 CAPACITOR BOARD 46−288504G1	10−1
	AMX1 A4 A3 CAPACITOR BOARD 46−288504−S	10−3
11	AMX1 A5 A1 DRIVE CONTROLLER 46−232834G1	11−1
	AMX1 A5 A1 DRIVE CONTROLLER 46−232834−S	11−3
12	AMX1 A5 A2 DRIVE POWER AMPLIFIER 46−232836G2	12−1
	AMX1 A5 A2 DRIVE POWER AMPLIFIER 46−232836−S	12−3
13	AMX1 A6 A1 HIGH VOLTAGE TRANSFORMER 46−270954G1	13−1
	AMX1 A6 A1 HIGH VOLTAGE TRANSFORMER 46−270954−S	13−3
14	AMX1 A2 S1 HALL EFFECT TUBE PARKED SENSOR 46−288962G1	14−1
	AMX1 A2 S1 HALL EFFECT TUBE PARKED SENSOR 46−288962−S	14−3
15	AMX2 A3 A1 BATTERY SENSE CIRCUIT 46−321370G1	15−1
	AMX2 A3 A1 BATTERY SENSE CIRCUIT 46−321370−S	15−3

REVISION HISTORY

REV	DATE	REASON FOR CHANGE
0	Sept. 2, 1994	Initial release.
1	Oct. 7, 1994	Made corrections to 46−264974−S in Section 5.
2	June 23, 1995	Changed name of Section 15.

LIST OF EFFECTIVE PAGES

PAGE NUMBER	REVISION NUMBER	PAGE NUMBER	REVISION NUMBER	PAGE NUMBER	REVISION NUMBER
Title Page	2				
i thru x	2				
1−1 and 1−2	2				
2−1 thru 2−10	2				
3−1 thru 3−4	2				
4−1 thru 4−4	2				
5−1 thru 5−10	2				
6−1 thru 6−6	2				
7−1 and 7−4	2				
8−1 and 8−4	2				
9−1 thru 9−6	2				
10−1 thru 10−4	2				
11−1 thru 11−6	2				
12−1 thru 12−6	2				
13−1 thru 13−4	2				
14−1 thru 14−4	2				
15−1 thru 15−4	2				

AMX−4
SCHEMATICS

SECTION 1
INTRODUCTION

ILLUSTRATION 1
AMX−4 IDENTIFICATION

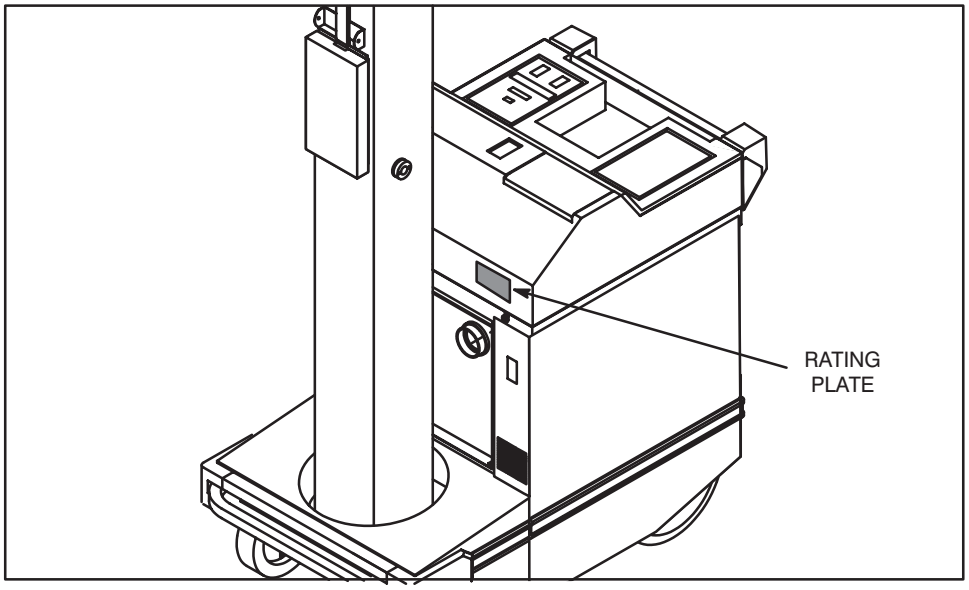

1−1 General

See Illustration 1. The AMX−4 is identified by one of the following Model Numbers 2115090, 2115090−2, 2115090−4, 2115090−5, 2115090−6, 2115090−7, 2115090−8, 2115090−9, 2115090−10, and 2115090−11 on the rating plate located on the top cover.

The AMX−4 contains operating safeguards providing maximum safety. Before servicing, be certain proper operating procedures are being used. Refer to Direction 2115603−100 *AMX−4 Operation (Models 2115090 Series)* or to Direction 2115602−100 *AMX−4 International Operation (Model 2115090 Series)* for proper operating procedures.

Satisfactory equipment performance requires the use of service personnel specially trained on x−ray apparatus. The GE Medical Systems, is responsible for the effects on safety, reliability, and performance only if the following conditions are met:

- The electrical wiring of the relevant rooms complies with all national and local codes.
- All assembly operations, extensions, re−adjustments, modifications, or repairs are carried out by GE Medical Systems, authorized service representatives.
- The equipment is used in accordance with the instructions for use. Refer to Direction 2115603−100 *AMX−4 Operation (Models 2115090 Series)* or to Direction 2115602−100 *AMX−4 International Operation (Models 2115090 Series)* for proper operating procedures.

CAUTION

Only trained and qualified personnel should be permitted access to the internal parts of this equipment.

ILLUSTRATION 2
ASSEMBLY DESIGNATORS

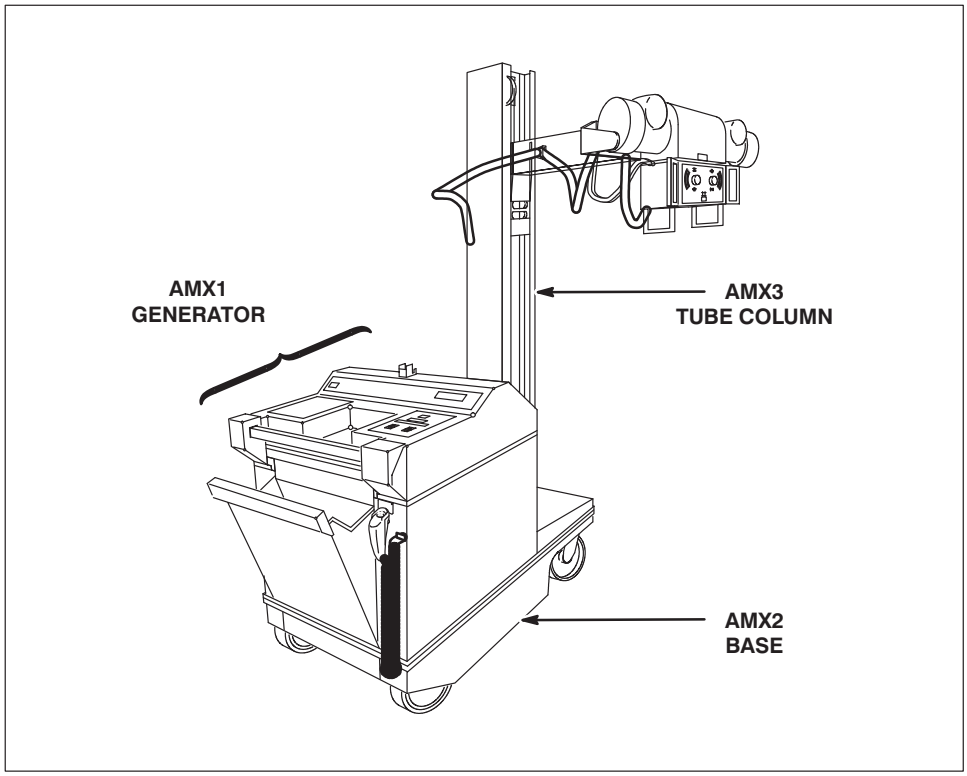

1−2 Assembly Designators

Schematics and Terminal Strips are arranged in Assembly Designator order. As-sembly Designators are codes which simplify component identification. The code is a convenient shorthand which defines each assembly or component. Assembly Designators are derived from the location of components and assemblies within a major assembly. Refer to Illustration 2 and the following list for AMX−4 codes:

- AMX1 Generator
  - AMX1 A1 Top Cover
  - AMX1 A2 Top Deck (under cover)
  - AMX1 A3 Left Side
  - AMX1 A4 Right Side
  - AMX1 A5 Rear
  - AMX1 A6 High Voltage Transformer
- AMX2 Base
  - AMX2 A1 Rear
  - AMX2 A2 Front
  - AMX2 A3 Battery
- AMX3 Column
  - AMX3 A1 Column
  - AMX3 A2 Tube Arm
  - AMX3 A3 Tube
  - AMX3 A4 Collimator

SCATHP O −
AMb (. P XCRAGG WERHOD

MP BCG −, , 0) 5) SCRHCS:

−, , 0) 5)	**−, , 0) 5) (7**
−, , 0) 5) (−	**−, , 0) 5) (8**
−, , 0) 5) (.	**−, , 0) 5) (5**
−, , 0) 5) (0	**−, , 0) 5) (,)**
−, , 0) 5) (1	**−, , 0) 5) (, ,**

OP 9 P ARB BRAWHOD

DRAWING NO. 2115090SCH
CONT ON SHEET 2 SH NO. 1

UNLESS OTHERWISE SPECIFIED USE THE FOLLOWING : –

APPLIED PRACTICES	SURFACES	TOLERANCES ON DIMENSIONS: DECIMALS (2 PLACES)	DECIMALS (3 PLACES)	ANGLES
46–208600	√	±	±	±

REV 2
2115090SCH
CONT ON SHEET 2 SH NO. 1

GENERAL ELECTRIC

TITLE SCHEMATIC DIAGRAM
OVERALL_SCHEMATICS_FOR_AMX_IV
FIRST MADE FOR AMX IV PRODUCTIVITY

2115090SCH
CONT ON SHEET 2 SH NO. 1

P/L ISSUED

2115090
2115090–2
2115090–4
2115090–5
2115090–6
2115090–7
2115090–8
2115090–9
2115090–10
2115090–11

THE REVISION NUMBER OF THIS SHEET IS THE CONTROL NUMBER OF THIS ENTIRE DOCUMENT. THIS REVISION NUMBER MUST INCREASE WHENEVER ANY SHEET IS CHANGED.

PCN #	–	–	180283	180288	–	–
DATE / SHT	27JUN94	29JUN94	11JUL94	2AUG94	–	–
2	A	0	0	1	–	–
3	A	0	1	2	–	–
4	A	0	0	0	–	–
5	A	0	0	0	–	–
6	A	0	0	0	–	–
7	A	0	0	0	–	–
8	A	0	0	0	–	–

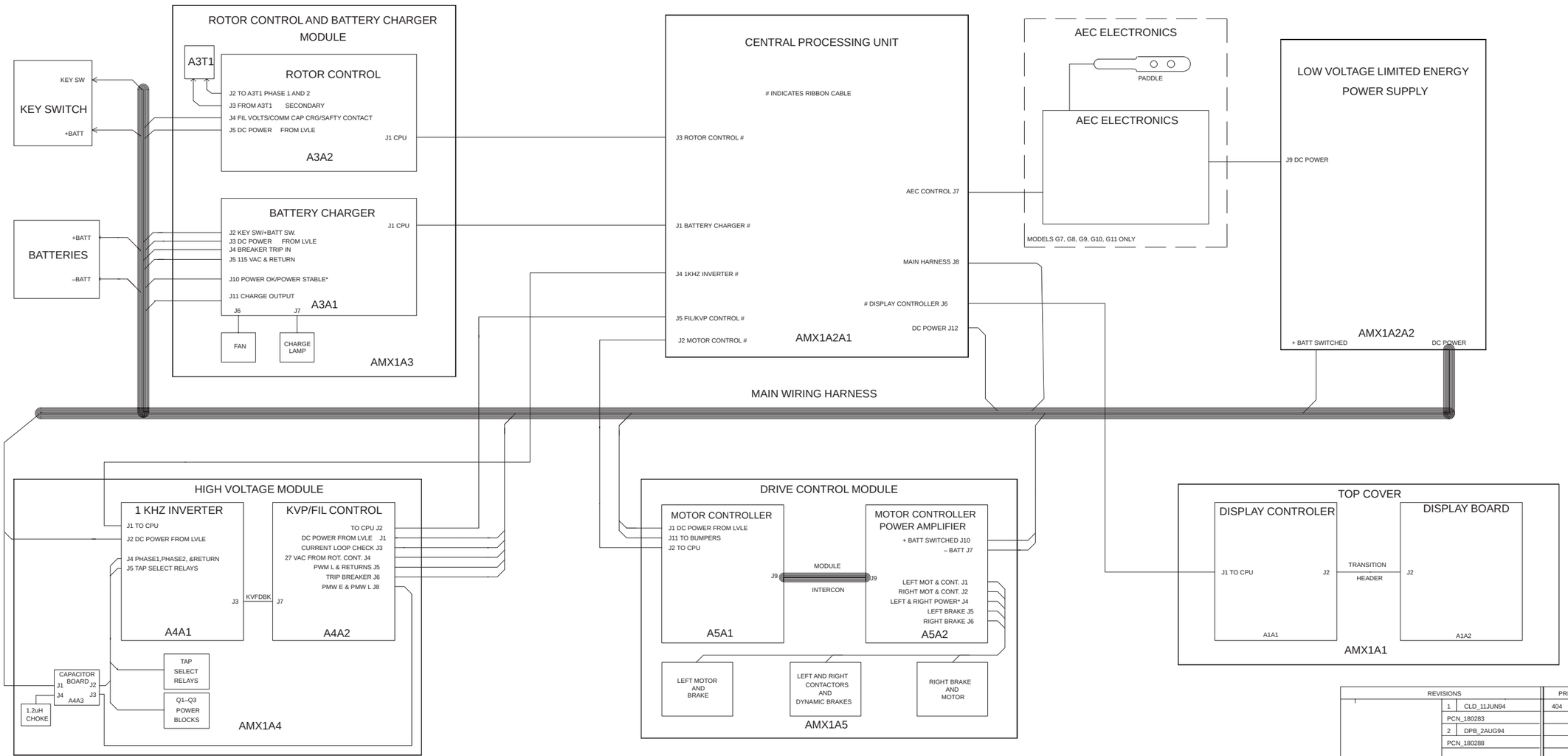

REVISIONS			PRINTS TO
	1	CLD_11JUN94	404
		PCN_180283	
	2	DPB_2AUG94	
		PCN_180288	

MADE BY C. DREWICZ_27JUN94
ISSUED N_ZETTEL_29JUN94

APPROVALS – –

MEDICAL SYSTEMS DIV OR DEPT.
MILWAUKEE, WISCONSIN LOCATION

2115090SCH
CONT ON SHEET 2 SH NO. 1

2115090SCH

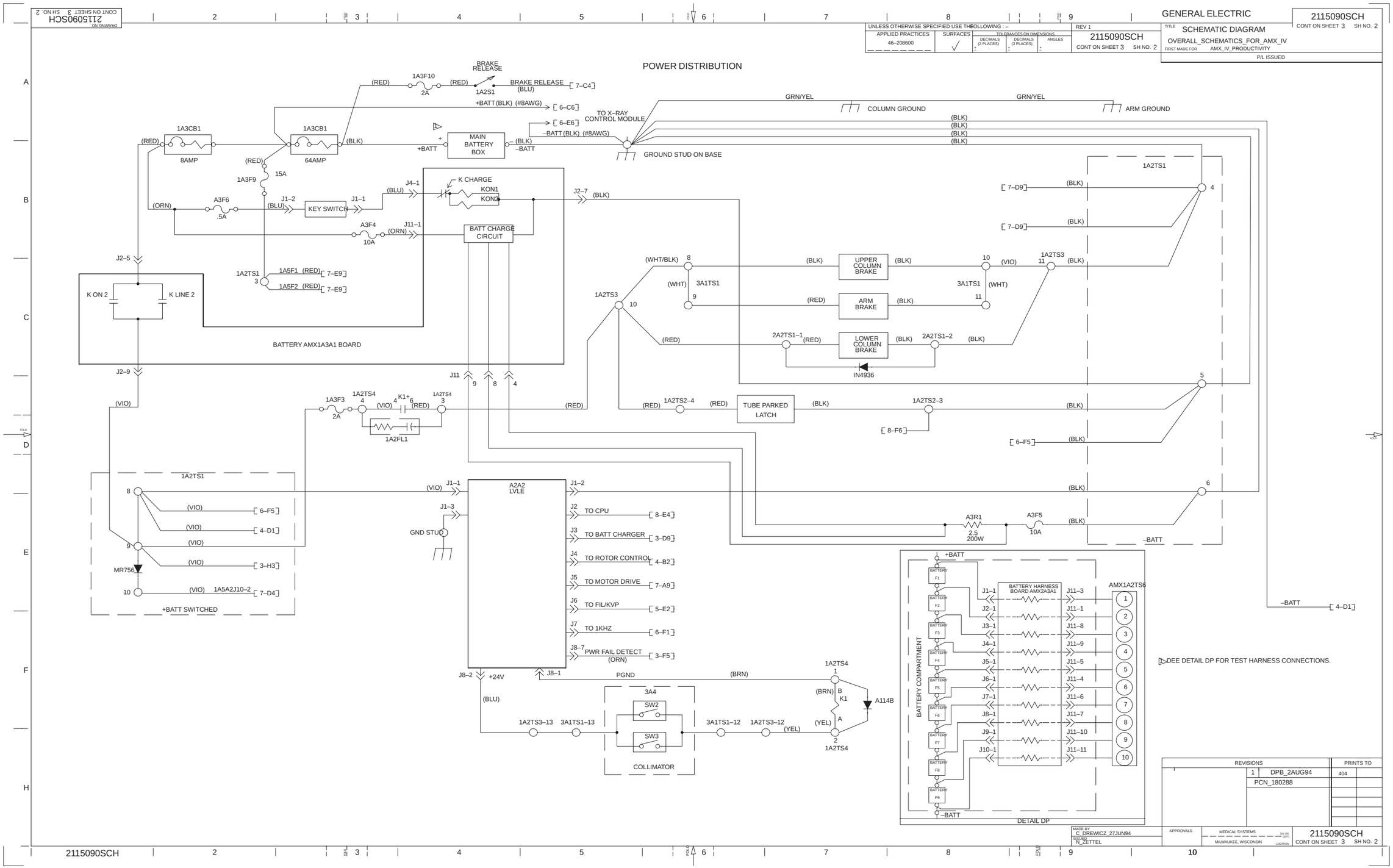
GENERAL ELECTRIC
SCHEMATIC DIAGRAM
OVERALL_SCHEMATICS_FOR_AMX_IV
AMX_IV_PRODUCTIVITY
2115090SCH
CONT ON SHEET 3 SH NO. 2
POWER DISTRIBUTION
BRAKE RELEASE
1A3F10
2A
1A2S1
BRAKE RELEASE (BLU)
7–C4
+BATT (BLK) (#8AWG)
6–C6
6–E6
–BATT (BLK) (#8AWG)
TO X–RAY CONTROL MODULE
GRN/YEL
COLUMN GROUND
ARM GROUND
GROUND STUD ON BASE
1A3CB1
8AMP
64AMP
MAIN BATTERY BOX
+BATT
–BATT
1A3F9
15A
A3F6
.5A
KEY SWITCH
J1–2
J1–1
J4–1
K CHARGE
KON1
KON2
J2–7
A3F4
10A
J11–1
BATT CHARGE CIRCUIT
J2–5
K ON 2
K LINE 2
1A2TS1
1A5F1 (RED)
1A5F2 (RED)
7–E9
BATTERY AMX1A3A1 BOARD
J2–9
J11
1A3F3
2A
1A2TS4
K1+
1A2FL1
1A2TS3
UPPER COLUMN BRAKE
ARM BRAKE
LOWER COLUMN BRAKE
IN4936
3A1TS1
2A2TS1–1
2A2TS1–2
TUBE PARKED LATCH
1A2TS2–4
1A2TS2–3
8–F6
6–F5
7–D9
1A2TS3
1A2TS1
+BATT SWITCHED
MR756
1A5A2J10–2
7–D4
A2A2 LVLE
J1–1
J1–3
GND STUD
J2 TO CPU 8–E4
J3 TO BATT CHARGER 3–D9
J4 TO ROTOR CONTROL 4–B2
J5 TO MOTOR DRIVE 7–A9
J6 TO FIL/KVP 5–E2
J7 TO 1KHZ 6–F1
J8–7 PWR FAIL DETECT (ORN) 3–F5
J8–2 +24V
J8–1
PGND
(BRN)
(BLU)
3A4
SW2
SW3
COLLIMATOR
1A2TS3–13
3A1TS1–13
3A1TS1–12
1A2TS3–12
(YEL)
A114B
A3R1
2.5
200W
A3F5
10A
–BATT
4–D1
BATTERY COMPARTMENT
BATTERY HARNESS BOARD AMX2A3A1
AMX1A2TS6
DETAIL DP
DEE DETAIL DP FOR TEST HARNESS CONNECTIONS.
REVISIONS
1 DPB_2AUG94
PCN_180288
PRINTS TO
404
MADE BY C_DREWICZ_27JUN94
ISSUED N_ZETTEL
APPROVALS
MEDICAL SYSTEMS
MILWAUKEE, WISCONSIN
2115090SCH
CONT ON SHEET 3 SH NO. 2

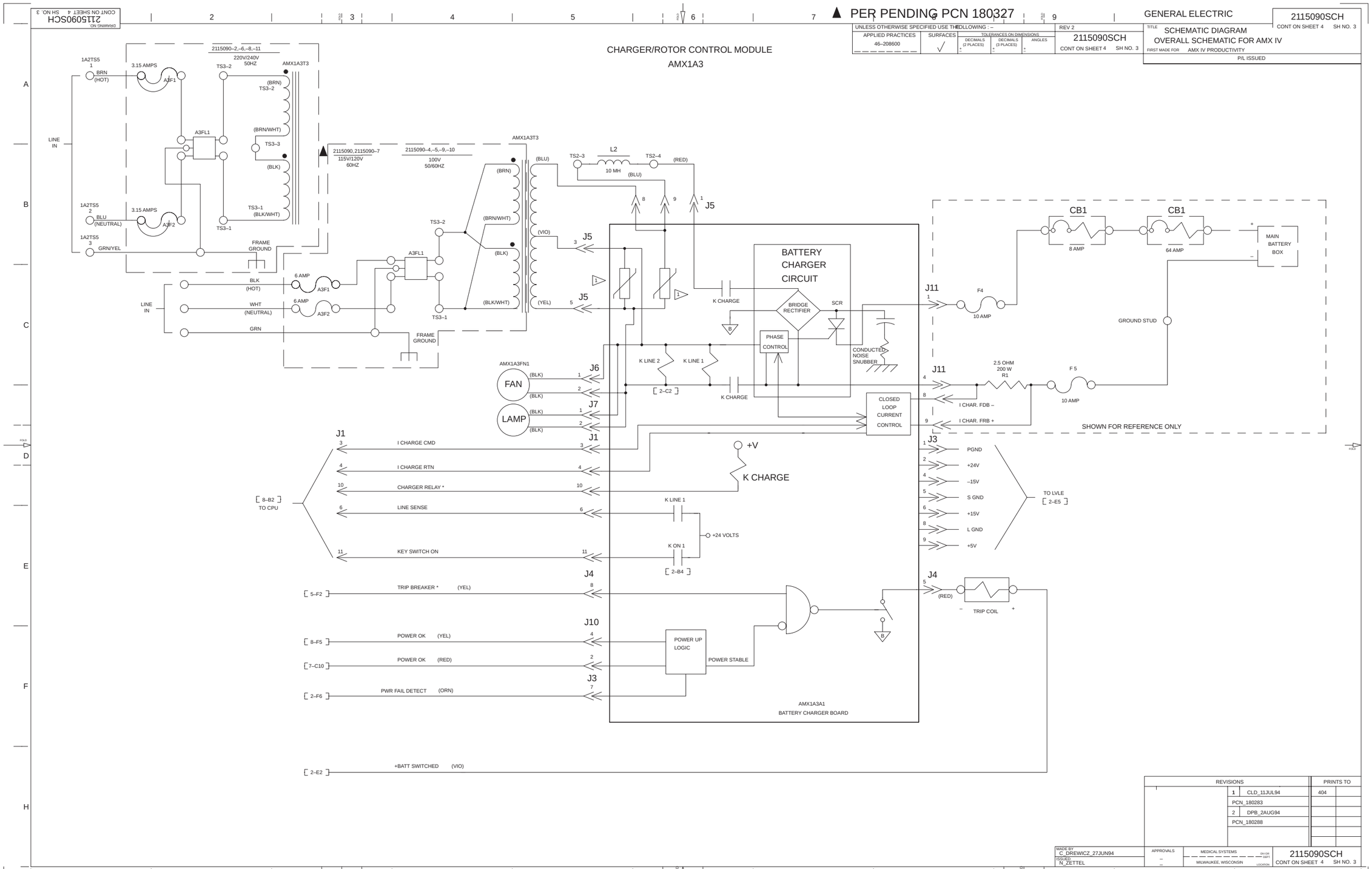
PER PENDING PCN 180327
GENERAL ELECTRIC
2115090SCH
CONT ON SHEET 4 SH NO. 3
UNLESS OTHERWISE SPECIFIED USE THE FOLLOWING : –
APPLIED PRACTICES
46–208600
SURFACES
TOLERANCES ON DIMENSIONS
DECIMALS (2 PLACES)
DECIMALS (3 PLACES)
ANGLES
REV 2
2115090SCH
CONT ON SHEET 4 SH NO. 3
TITLE
SCHEMATIC DIAGRAM
OVERALL SCHEMATIC FOR AMX IV
FIRST MADE FOR AMX IV PRODUCTIVITY
P/L ISSUED
CONT ON SHEET 4 SH NO. 3
2115090SCH
CHARGER/ROTOR CONTROL MODULE
AMX1A3
1A2TS5
BRN (HOT)
BLU (NEUTRAL)
GRN/YEL
3.15 AMPS
A3F1
A3F2
LINE IN
A3FL1
2115090–2,–6,–8,–11
220V/240V
50HZ
AMX1A3T3
TS3–2
TS3–3
TS3–1
(BRN)
(BRN/WHT)
(BLK)
(BLK/WHT)
FRAME GROUND
2115090,2115090–7
115V/120V
60HZ
2115090–4,–5,–9,–10
100V
50/60HZ
BLK (HOT)
WHT (NEUTRAL)
GRN
6 AMP
TS2–3
TS2–4
L2
10 MH
(BLU)
(RED)
(VIO)
(YEL)
J5
K CHARGE
BATTERY CHARGER CIRCUIT
BRIDGE RECTIFIER
SCR
PHASE CONTROL
CONDUCTED NOISE SNUBBER
K LINE 2
K LINE 1
2–C2
AMX1A3FN1
FAN
LAMP
J6
J7
J1
I CHARGE CMD
I CHARGE RTN
CHARGER RELAY *
LINE SENSE
KEY SWITCH ON
8–B2
TO CPU
+V
K CHARGE
K ON 1
+24 VOLTS
2–B4
J4
TRIP BREAKER *
5–F2
J10
POWER OK (YEL)
8–F5
POWER OK (RED)
7–C10
J3
PWR FAIL DETECT (ORN)
2–F6
POWER UP LOGIC
POWER STABLE
AMX1A3A1
BATTERY CHARGER BOARD
+BATT SWITCHED (VIO)
2–E2
CB1
8 AMP
64 AMP
MAIN BATTERY BOX
J11
F4
10 AMP
GROUND STUD
2.5 OHM
200 W
R1
F 5
I CHAR. FDB –
I CHAR. FRB +
CLOSED LOOP CURRENT CONTROL
SHOWN FOR REFERENCE ONLY
PGND
+24V
–15V
S GND
+15V
L GND
+5V
TO LVLE
2–E5
TRIP COIL
REVISIONS
1 CLD_11JUL94
PCN_180283
2 DPB_2AUG94
PCN_180288
PRINTS TO
404
MADE BY C_DREWICZ_27JUN94
ISSUED N_ZETTEL
APPROVALS
MEDICAL SYSTEMS
MILWAUKEE, WISCONSIN
2115090SCH
CONT ON SHEET 4 SH NO. 3

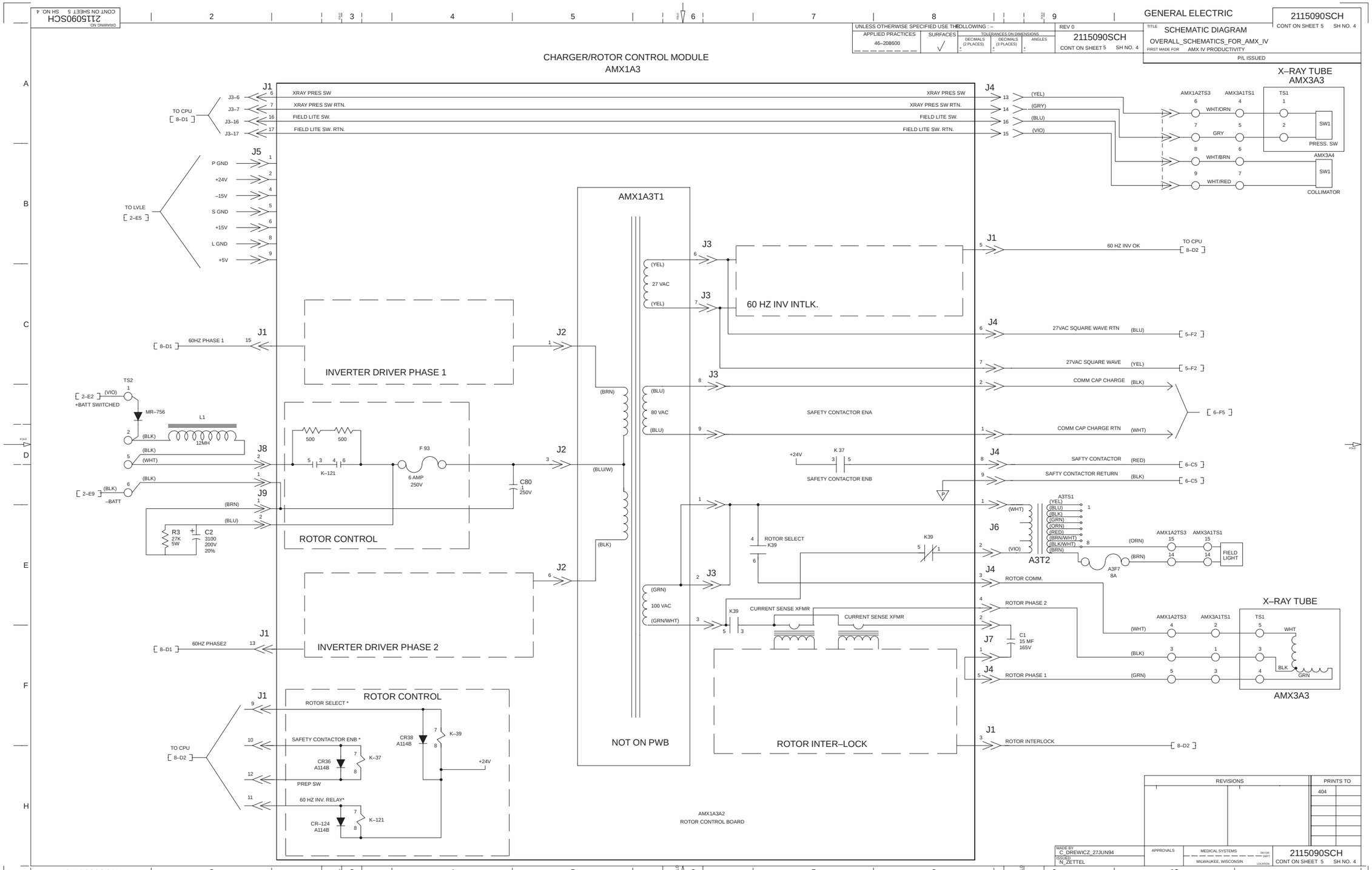
GENERAL ELECTRIC
2115090SCH
CONT ON SHEET 5 SH NO. 4
SCHEMATIC DIAGRAM
OVERALL_SCHEMATICS_FOR_AMX_IV
AMX IV PRODUCTIVITY
P/L ISSUED
REV 0
UNLESS OTHERWISE SPECIFIED USE THE FOLLOWING : –
APPLIED PRACTICES
46–208600
SURFACES
TOLERANCES ON DIMENSIONS
DECIMALS (2 PLACES)
DECIMALS (3 PLACES)
ANGLES
CHARGER/ROTOR CONTROL MODULE
AMX1A3
J1
J4
J5
J3
J2
J8
J9
J6
J7
TO CPU
8–D1
TO LVLE
2–E5
XRAY PRES SW
XRAY PRES SW RTN.
FIELD LITE SW.
FIELD LITE SW. RTN.
P GND
+24V
–15V
S GND
+15V
L GND
+5V
60HZ PHASE 1
60HZ PHASE2
AMX1A3T1
27 VAC
80 VAC
100 VAC
NOT ON PWB
60 HZ INV INTLK.
60 HZ INV OK
TO CPU
8–D2
INVERTER DRIVER PHASE 1
INVERTER DRIVER PHASE 2
ROTOR CONTROL
27VAC SQUARE WAVE RTN
5–F2
27VAC SQUARE WAVE
COMM CAP CHARGE
COMM CAP CHARGE RTN
6–F5
SAFETY CONTACTOR ENA
SAFETY CONTACTOR ENB
SAFTY CONTACTOR
SAFTY CONTACTOR RETURN
6–C5
ROTOR SELECT
K39
CURRENT SENSE XFMR
ROTOR COMM.
ROTOR PHASE 2
ROTOR PHASE 1
ROTOR INTERLOCK
ROTOR INTER–LOCK
X–RAY TUBE
AMX3A3
AMX1A2TS3
AMX3A1TS1
TS1
SW1
PRESS. SW
AMX3A4
COLLIMATOR
WHT/ORN
GRY
WHT/BRN
WHT/RED
A3TS1
A3T2
A3F7
8A
FIELD LIGHT
TS2
+BATT SWITCHED
–BATT
MR–756
L1
12MH
K–121
F 93
6 AMP
250V
C80
1
250V
R3
27K
5W
C2
3100
200V
20%
C1
15 MF
165V
ROTOR SELECT *
SAFETY CONTACTOR ENB *
PREP SW
60 HZ INV. RELAY*
CR38
A114B
CR36
A114B
CR–124
A114B
K–39
K–37
+24V
AMX1A3A2
ROTOR CONTROL BOARD
REVISIONS
PRINTS TO
404
MADE BY
C. DREWICZ 27JUN94
ISSUED
N. ZETTEL
APPROVALS
MEDICAL SYSTEMS
MILWAUKEE, WISCONSIN
2115090SCH
CONT ON SHEET 5 SH NO. 4

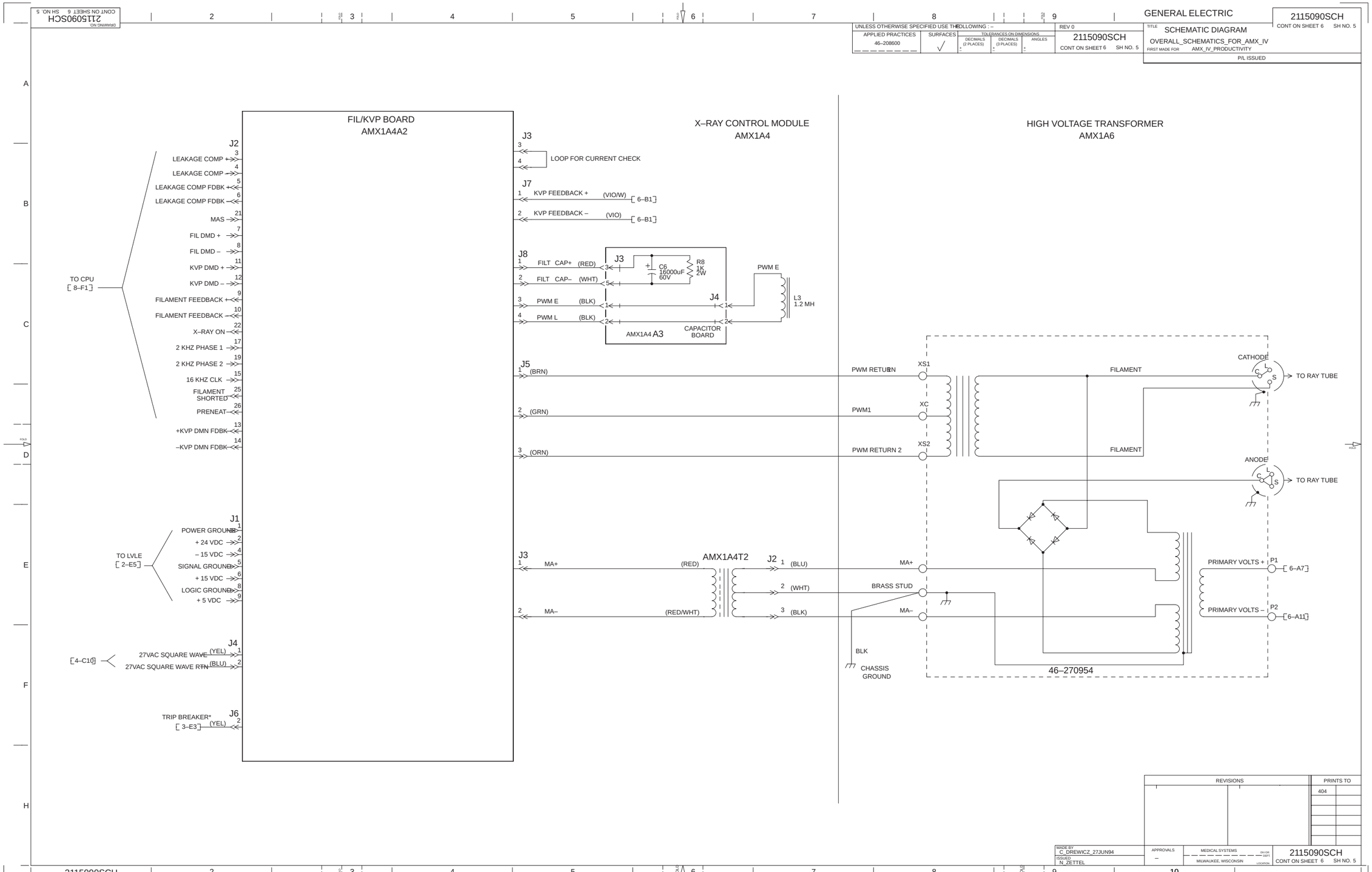
GENERAL ELECTRIC
2115090SCH
CONT ON SHEET 6 SH NO. 5
SCHEMATIC DIAGRAM
OVERALL_SCHEMATICS_FOR_AMX_IV
AMX_IV_PRODUCTIVITY
P/L ISSUED
REV 0
UNLESS OTHERWISE SPECIFIED USE THE FOLLOWING : –
APPLIED PRACTICES
46–208600
SURFACES
TOLERANCES ON DIMENSIONS
DECIMALS (2 PLACES)
DECIMALS (3 PLACES)
ANGLES
FIL/KVP BOARD
AMX1A4A2
X–RAY CONTROL MODULE
AMX1A4
HIGH VOLTAGE TRANSFORMER
AMX1A6
J2
LEAKAGE COMP +
LEAKAGE COMP –
LEAKAGE COMP FDBK +
LEAKAGE COMP FDBK –
MAS –
FIL DMD +
FIL DMD –
KVP DMD +
KVP DMD –
FILAMENT FEEDBACK +
FILAMENT FEEDBACK –
X–RAY ON –
2 KHZ PHASE 1
2 KHZ PHASE 2
16 KHZ CLK
FILAMENT SHORTED
PRENEAT–
+KVP DMN FDBK
–KVP DMN FDBK
TO CPU
[8–F1]
J3
LOOP FOR CURRENT CHECK
J7
KVP FEEDBACK + (VIO/W) [6–B1]
KVP FEEDBACK – (VIO) [6–B1]
J8
FILT CAP+ (RED)
FILT CAP– (WHT)
PWM E (BLK)
PWM L (BLK)
C6 16000uF 60V
R8 1K 2W
J4
AMX1A4 A3
CAPACITOR BOARD
PWM E
L3 1.2 MH
J5
(BRN)
(GRN)
(ORN)
PWM RETURN 1
PWM1
PWM RETURN 2
XS1
XC
XS2
FILAMENT
CATHODE
ANODE
TO RAY TUBE
J1
POWER GROUND
+ 24 VDC
– 15 VDC
SIGNAL GROUND
+ 15 VDC
LOGIC GROUND
+ 5 VDC
TO LVLE
[2–E5]
J3
MA+ (RED)
MA– (RED/WHT)
AMX1A4T2
J2
(BLU)
(WHT)
(BLK)
MA+
BRASS STUD
MA–
BLK
CHASSIS GROUND
PRIMARY VOLTS +
PRIMARY VOLTS –
P1
P2
[6–A7]
[6–A11]
J4
27VAC SQUARE WAVE (YEL)
27VAC SQUARE WAVE RTN (BLU)
[4–C10]
J6
TRIP BREAKER*
[3–E3]
(YEL)
46–270954
REVISIONS
PRINTS TO
404
MADE BY
C_DREWICZ_27JUN94
ISSUED
N_ZETTEL
APPROVALS
MEDICAL SYSTEMS
MILWAUKEE, WISCONSIN
2115090SCH
CONT ON SHEET 6 SH NO. 5

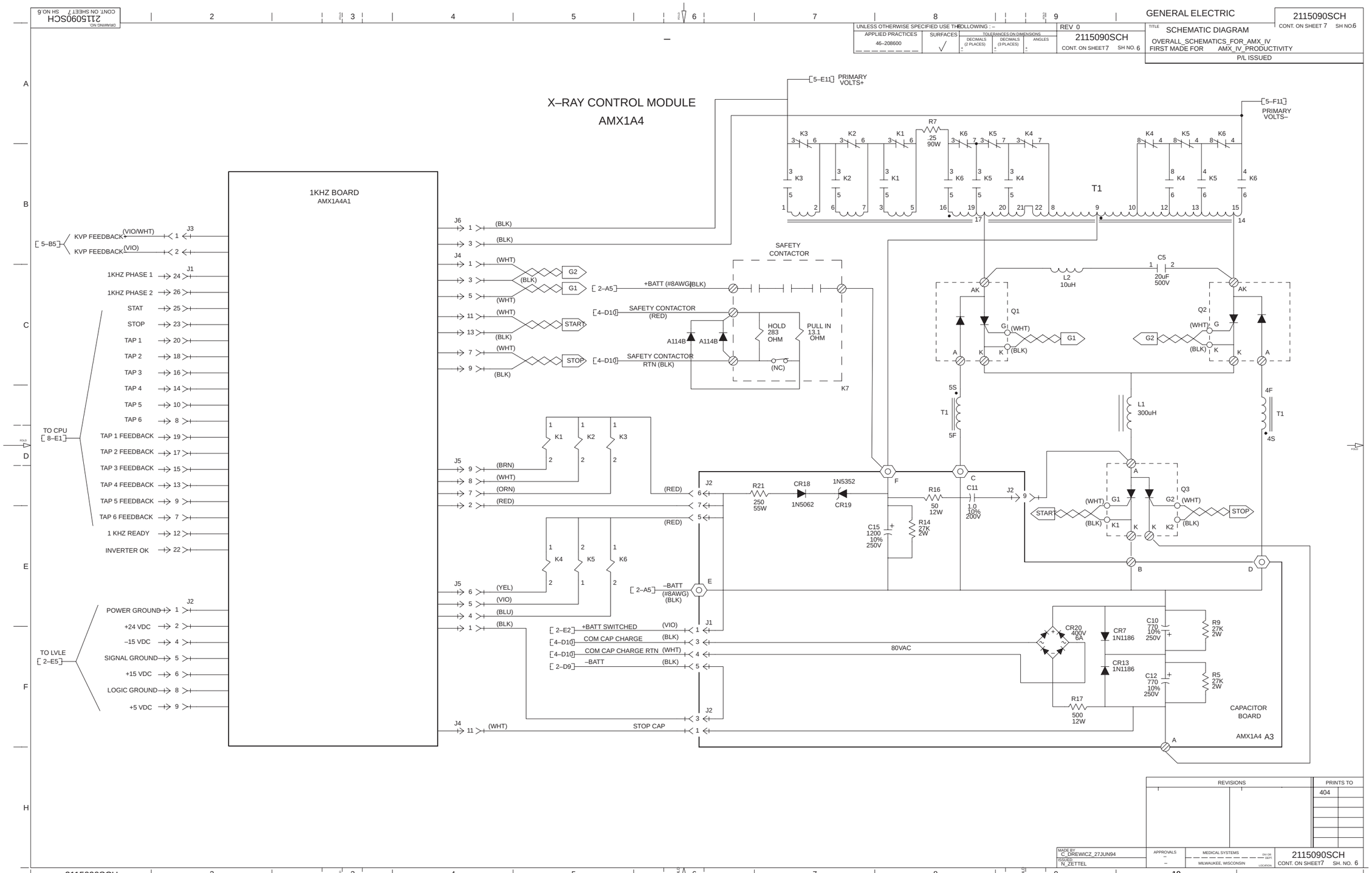
GENERAL ELECTRIC
2115090SCH
CONT. ON SHEET 7 SH NO.6
SCHEMATIC DIAGRAM
OVERALL_SCHEMATICS_FOR_AMX_IV
FIRST MADE FOR AMX_IV_PRODUCTIVITY
P/L ISSUED
REV 0
UNLESS OTHERWISE SPECIFIED USE THE FOLLOWING : –
APPLIED PRACTICES
46–208600
SURFACES
TOLERANCES ON DIMENSIONS
DECIMALS (2 PLACES)
DECIMALS (3 PLACES)
ANGLES
X–RAY CONTROL MODULE
AMX1A4
1KHZ BOARD
AMX1A4A1
[5–E11] PRIMARY VOLTS+
[5–F11] PRIMARY VOLTS–
R7 .25 90W
T1
K1
K2
K3
K4
K5
K6
KVP FEEDBACK (VIO/WHT)
KVP FEEDBACK (VIO)
[5–B5]
1KHZ PHASE 1
1KHZ PHASE 2
STAT
STOP
TAP 1
TAP 2
TAP 3
TAP 4
TAP 5
TAP 6
TAP 1 FEEDBACK
TAP 2 FEEDBACK
TAP 3 FEEDBACK
TAP 4 FEEDBACK
TAP 5 FEEDBACK
TAP 6 FEEDBACK
1 KHZ READY
INVERTER OK
TO CPU
[8–E1]
POWER GROUND
+24 VDC
–15 VDC
SIGNAL GROUND
+15 VDC
LOGIC GROUND
+5 VDC
TO LVLE
[2–E5]
SAFETY CONTACTOR
+BATT (#8AWG)(BLK)
[2–A5]
SAFETY CONTACTOR (RED)
[4–D10]
SAFETY CONTACTOR RTN (BLK)
HOLD 283 OHM
PULL IN 13.1 OHM
(NC)
A114B
K7
G1
G2
START
STOP
L2 10uH
C5 20uF 500V
Q1
Q2
Q3
5S
5F
4F
4S
L1 300uH
R21 250 55W
CR18 1N5062
1N5352
CR19
R16 50 12W
C11 1.0 10% 200V
C15 1200 10% 250V
R14 27K 2W
–BATT (#8AWG) (BLK)
[2–A5]
+BATT SWITCHED (VIO)
[2–E2]
COM CAP CHARGE (BLK)
[4–D10]
COM CAP CHARGE RTN (WHT)
[4–D10]
–BATT (BLK)
[2–D9]
80VAC
CR20 400V 6A
CR7 1N1186
CR13 1N1186
C10 770 10% 250V
C12 770 10% 250V
R9 27K 2W
R5 27K 2W
R17 500 12W
STOP CAP
CAPACITOR BOARD
AMX1A4 A3
REVISIONS
PRINTS TO
404
MADE BY C_DREWICZ_27JUN94
REVIEWED N_ZETTEL
APPROVALS
MEDICAL SYSTEMS
MILWAUKEE, WISCONSIN
2115090SCH
CONT. ON SHEET7 SH. NO. 6

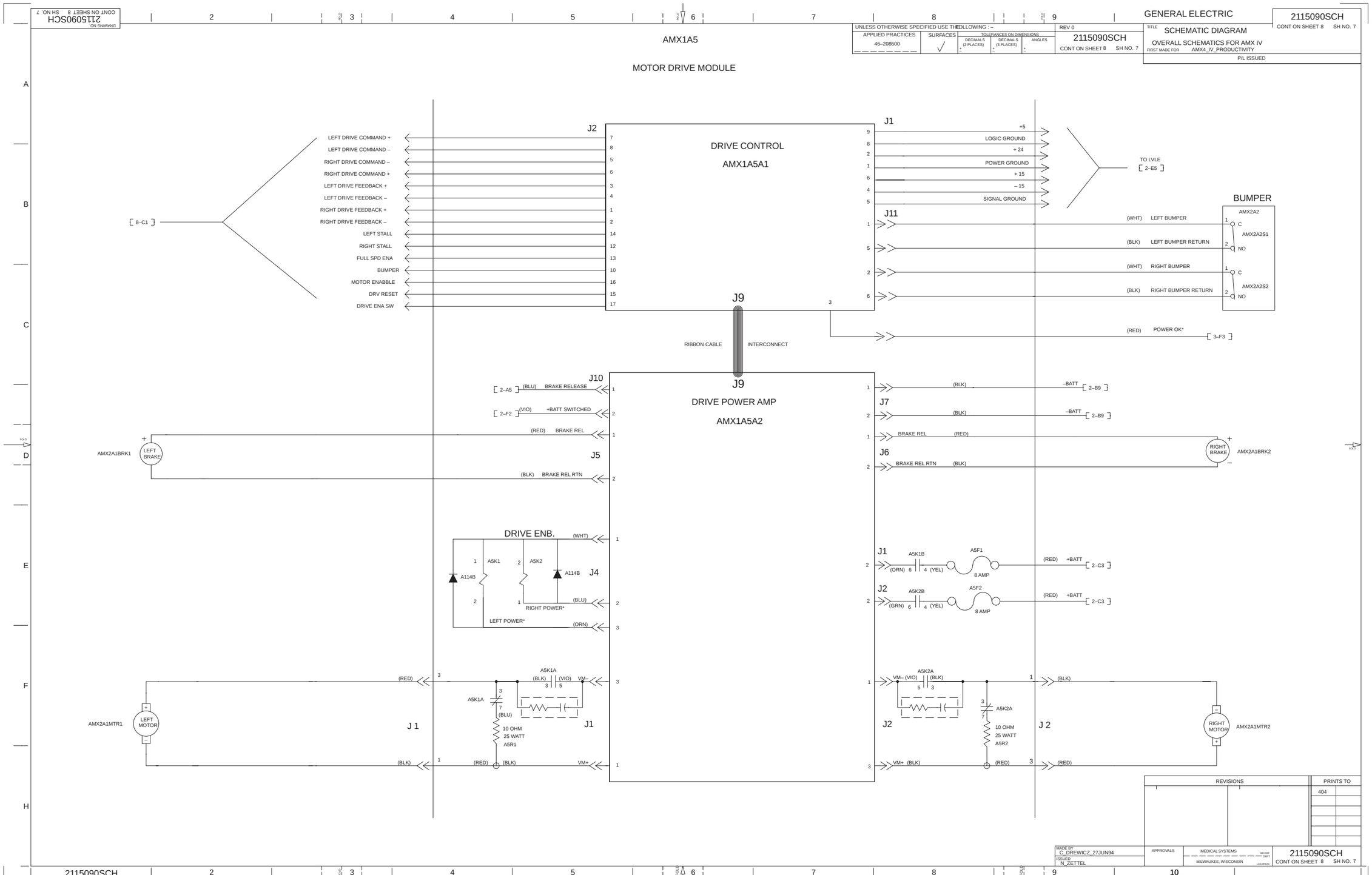
GENERAL ELECTRIC
2115090SCH
CONT ON SHEET 8 SH NO. 7
SCHEMATIC DIAGRAM
OVERALL SCHEMATICS FOR AMX IV
AMX1A5
MOTOR DRIVE MODULE
DRIVE CONTROL
AMX1A5A1
J2
J1
LEFT DRIVE COMMAND +
LEFT DRIVE COMMAND –
RIGHT DRIVE COMMAND –
RIGHT DRIVE COMMAND +
LEFT DRIVE FEEDBACK +
LEFT DRIVE FEEDBACK –
RIGHT DRIVE FEEDBACK +
RIGHT DRIVE FEEDBACK –
LEFT STALL
RIGHT STALL
FULL SPD ENA
BUMPER
MOTOR ENABBLE
DRV RESET
DRIVE ENA SW
8–C1
+5
LOGIC GROUND
+ 24
POWER GROUND
+ 15
– 15
SIGNAL GROUND
TO LVLE
2–E5
BUMPER
AMX2A2
AMX2A2S1
AMX2A2S2
(WHT) LEFT BUMPER
(BLK) LEFT BUMPER RETURN
(WHT) RIGHT BUMPER
(BLK) RIGHT BUMPER RETURN
(RED) POWER OK*
3–F3
J9
RIBBON CABLE
INTERCONNECT
DRIVE POWER AMP
AMX1A5A2
J10
2–A5 (BLU) BRAKE RELEASE
2–F2 (VIO) +BATT SWITCHED
(RED) BRAKE REL
(BLK) BRAKE REL RTN
J5
AMX2A1BRK1
LEFT BRAKE
J7
(BLK) –BATT 2–B9
J6
BRAKE REL (RED)
BRAKE REL RTN (BLK)
RIGHT BRAKE
AMX2A1BRK2
DRIVE ENB. (WHT)
A5K1
A5K2
A114B
J4
RIGHT POWER* (BLU)
LEFT POWER* (ORN)
A5K1B
A5F1
8 AMP
(ORN) 6 4 (YEL)
(RED) +BATT 2–C3
A5K2B
A5F2
(GRN) 6 4 (YEL)
AMX2A1MTR1
LEFT MOTOR
J 1
A5K1A
(BLK) (VIO) VM–
(BLU)
10 OHM
25 WATT
A5R1
(RED) (BLK) VM+
A5K2A
VM– (VIO) (BLK)
VM+ (BLK)
A5R2
J 2
RIGHT MOTOR
AMX2A1MTR2
REVISIONS
PRINTS TO
404
MADE BY C. DREWICZ 27JUN94
ISSUED N. ZETTEL
APPROVALS
MEDICAL SYSTEMS
MILWAUKEE, WISCONSIN
2115090SCH
CONT ON SHEET 8 SH NO. 7

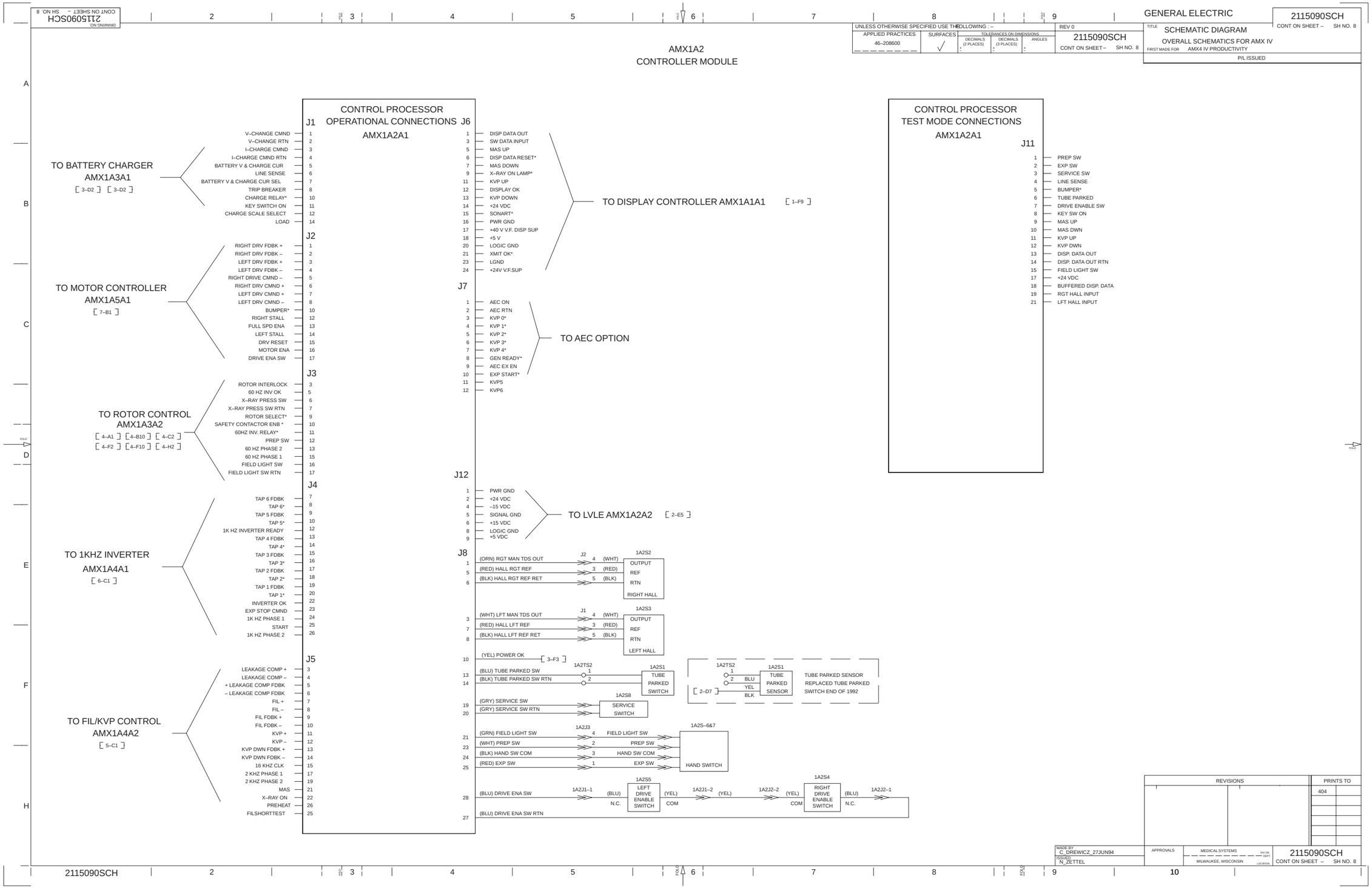
GENERAL ELECTRIC
2115090SCH
CONT ON SHEET – SH NO. 8
TITLE SCHEMATIC DIAGRAM
OVERALL SCHEMATICS FOR AMX IV
FIRST MADE FOR AMX4 IV PRODUCTIVITY
P/L ISSUED
UNLESS OTHERWISE SPECIFIED USE THE FOLLOWING : –
APPLIED PRACTICES 46–208600
SURFACES
TOLERANCES ON DIMENSIONS
DECIMALS (2 PLACES)
DECIMALS (3 PLACES)
ANGLES
REV 0
2115090SCH
CONT ON SHEET – SH NO. 8
DRAWING NO. 2115090SCH
CONT ON SHEET – SH NO. 8
AMX1A2
CONTROLLER MODULE
CONTROL PROCESSOR
OPERATIONAL CONNECTIONS
AMX1A2A1
J1
V–CHANGE CMND
V–CHANGE RTN
I–CHARGE CMND
I–CHARGE CMND RTN
BATTERY V & CHARGE CUR
LINE SENSE
BATTERY V & CHARGE CUR SEL
TRIP BREAKER
CHARGE RELAY*
KEY SWITCH ON
CHARGE SCALE SELECT
LOAD
TO BATTERY CHARGER
AMX1A3A1
[3–D2] [3–D2]
J2
RIGHT DRV FDBK +
RIGHT DRV FDBK –
LEFT DRV FDBK +
LEFT DRV FDBK –
RIGHT DRIVE CMND –
RIGHT DRV CMND +
LEFT DRV CMND +
LEFT DRV CMND –
BUMPER*
RIGHT STALL
FULL SPD ENA
LEFT STALL
DRV RESET
MOTOR ENA
DRIVE ENA SW
TO MOTOR CONTROLLER
AMX1A5A1
[7–B1]
J3
ROTOR INTERLOCK
60 HZ INV OK
X–RAY PRESS SW
X–RAY PRESS SW RTN
ROTOR SELECT*
SAFETY CONTACTOR ENB *
60HZ INV. RELAY*
PREP SW
60 HZ PHASE 2
60 HZ PHASE 1
FIELD LIGHT SW
FIELD LIGHT SW RTN
TO ROTOR CONTROL
AMX1A3A2
[4–A1] [4–B10] [4–C2]
[4–F2] [4–F10] [4–H2]
J4
TAP 6 FDBK
TAP 6*
TAP 5 FDBK
TAP 5*
1K HZ INVERTER READY
TAP 4 FDBK
TAP 4*
TAP 3 FDBK
TAP 3*
TAP 2 FDBK
TAP 2*
TAP 1 FDBK
TAP 1*
INVERTER OK
EXP STOP CMND
1K HZ PHASE 1
START
1K HZ PHASE 2
TO 1KHZ INVERTER
AMX1A4A1
[6–C1]
J5
LEAKAGE COMP +
LEAKAGE COMP –
+ LEAKAGE COMP FDBK
– LEAKAGE COMP FDBK
FIL +
FIL –
FIL FDBK +
FIL FDBK –
KVP +
KVP –
KVP DWN FDBK +
KVP DWN FDBK –
16 KHZ CLK
2 KHZ PHASE 1
2 KHZ PHASE 2
MAS
X–RAY ON
PREHEAT
FILSHORTTEST
TO FIL/KVP CONTROL
AMX1A4A2
[5–C1]
J6
DISP DATA OUT
SW DATA INPUT
MAS UP
DISP DATA RESET*
MAS DOWN
X–RAY ON LAMP*
KVP UP
DISPLAY OK
KVP DOWN
+24 VDC
SONART*
PWR GND
+40 V V.F. DISP SUP
+5 V
LOGIC GND
XMIT OK*
LGND
+24V V.F.SUP
TO DISPLAY CONTROLLER AMX1A1A1 [1–F9]
J7
AEC ON
AEC RTN
KVP 0*
KVP 1*
KVP 2*
KVP 3*
KVP 4*
GEN READY*
AEC EX EN
EXP START*
KVP5
KVP6
TO AEC OPTION
J12
PWR GND
+24 VDC
–15 VDC
SIGNAL GND
+15 VDC
LOGIC GND
+5 VDC
TO LVLE AMX1A2A2 [2–E5]
J8
(ORN) RGT MAN TDS OUT
(RED) HALL RGT REF
(BLK) HALL RGT REF RET
1A2S2
OUTPUT
REF
RTN
RIGHT HALL
(WHT) LFT MAN TDS OUT
(RED) HALL LFT REF
(BLK) HALL LFT REF RET
1A2S3
OUTPUT
REF
RTN
LEFT HALL
(YEL) POWER OK [3–F3]
(BLU) TUBE PARKED SW
(BLK) TUBE PARKED SW RTN
1A2TS2
1A2S1
TUBE PARKED SWITCH
[2–D7]
TUBE PARKED SENSOR
TUBE PARKED SENSOR REPLACED TUBE PARKED SWITCH END OF 1992
(GRY) SERVICE SW
(GRY) SERVICE SW RTN
1A2S8
SERVICE SWITCH
(GRN) FIELD LIGHT SW
(WHT) PREP SW
(BLK) HAND SW COM
(RED) EXP SW
1A2J3
FIELD LIGHT SW
PREP SW
HAND SW COM
EXP SW
1A2S–6&7
HAND SWITCH
(BLU) DRIVE ENA SW
1A2J1–1
1A2S5
LEFT DRIVE ENABLE SWITCH
1A2J1–2
1A2J2–2
1A2S4
RIGHT DRIVE ENABLE SWITCH
1A2J2–1
(BLU) DRIVE ENA SW RTN
CONTROL PROCESSOR
TEST MODE CONNECTIONS
AMX1A2A1
J11
PREP SW
EXP SW
SERVICE SW
LINE SENSE
BUMPER*
TUBE PARKED
DRIVE ENABLE SW
KEY SW ON
MAS UP
MAS DWN
KVP UP
KVP DWN
DISP. DATA OUT
DISP. DATA OUT RTN
FIELD LIGHT SW
+24 VDC
BUFFERED DISP. DATA
RGT HALL INPUT
LFT HALL INPUT
REVISIONS
PRINTS TO
404
MADE BY C. DREWICZ 27JUN94
ISSUED N. ZETTEL
APPROVALS
MEDICAL SYSTEMS
MILWAUKEE, WISCONSIN
2115090SCH
CONT ON SHEET – SH NO. 8

SECTION 3
DISPLAY CONTROLLER
AMX1 A1 A1
. 6(26. 982G1

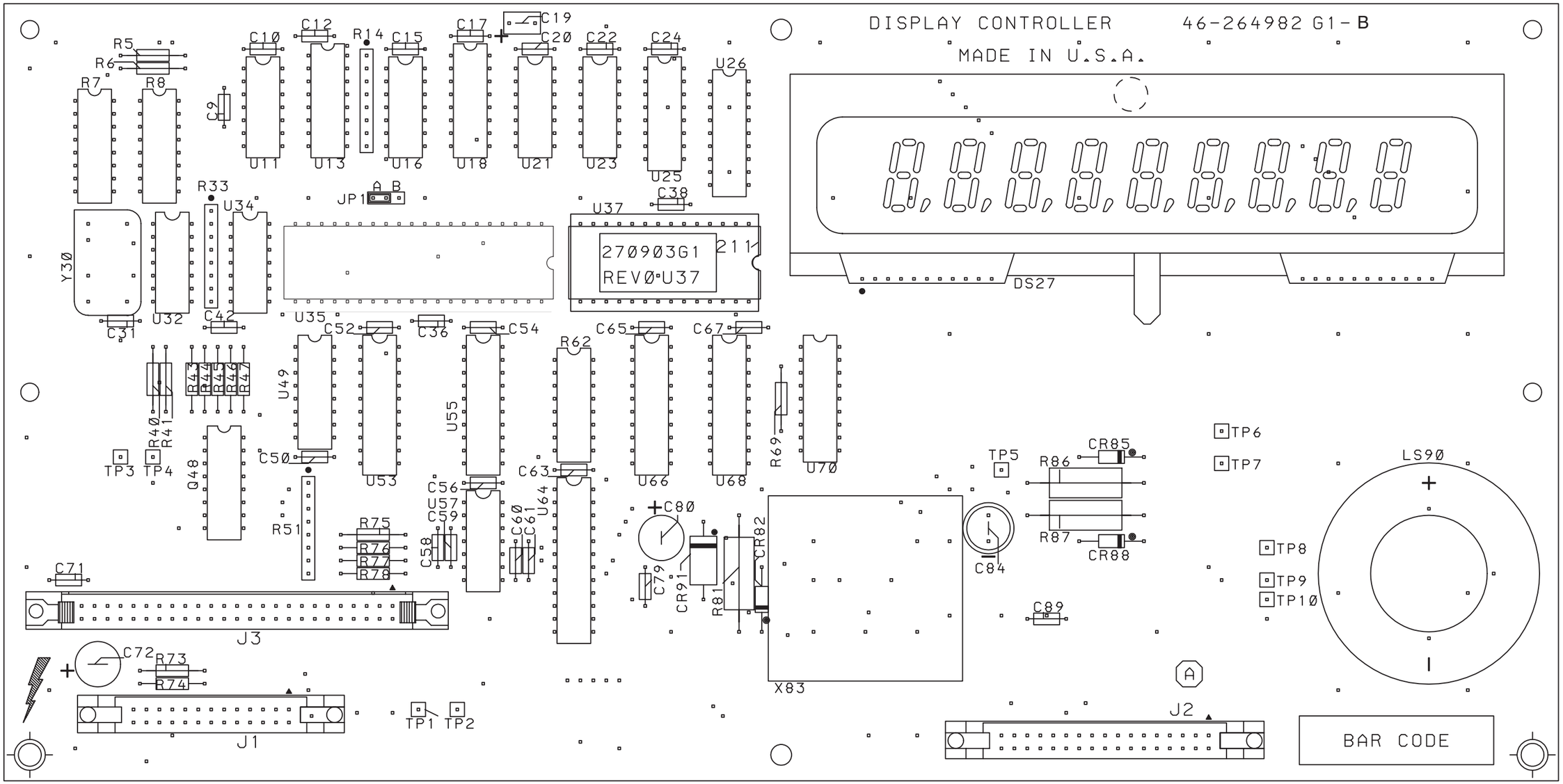

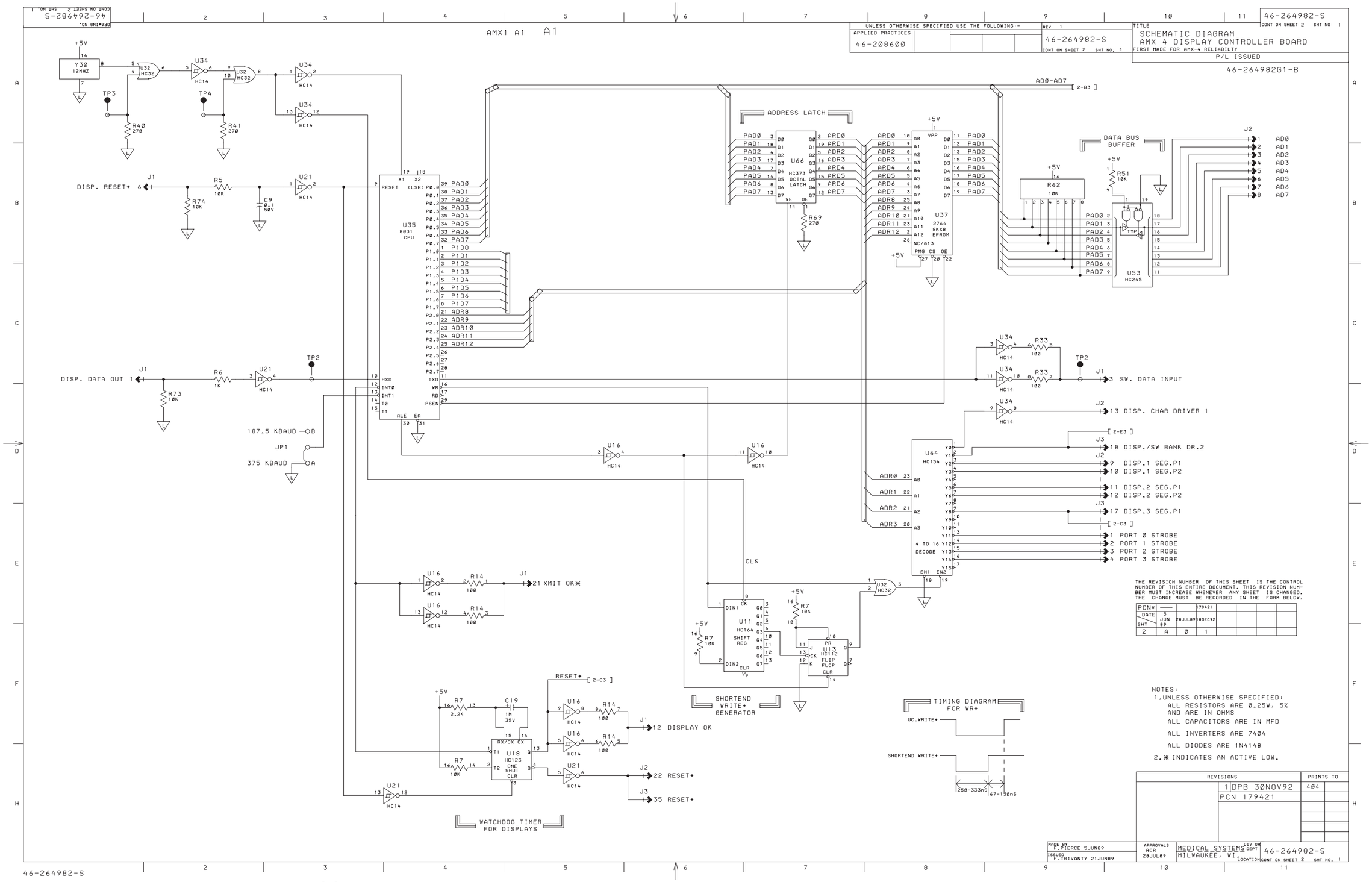
46-264982-S
CONT ON SHEET 2 SHT NO. 1
DRAWING NO.
AMX1 A1 A1
UNLESS OTHERWISE SPECIFIED USE THE FOLLOWING:-
APPLIED PRACTICES
46-208600
REV 1
46-264982-S
CONT ON SHEET 2 SHT NO. 1
TITLE
SCHEMATIC DIAGRAM
AMX 4 DISPLAY CONTROLLER BOARD
FIRST MADE FOR AMX-4 RELIABILTY
P/L ISSUED
46-264982G1-B
ADDRESS LATCH
DATA BUS BUFFER
U35 8031 CPU
U66 HC373 OCTAL LATCH
U37 2764 8KX8 EPROM
U53 HC245
U64 HC154 4 TO 16 DECODE
U11 HC164 SHIFT REG
U13 HC112 FLIP FLOP
U18 HC123 ONE SHOT
SHORTEND WRITE* GENERATOR
WATCHDOG TIMER FOR DISPLAYS
TIMING DIAGRAM FOR WR*
DISP. RESET*
DISP. DATA OUT
187.5 KBAUD
375 KBAUD
3 SW. DATA INPUT
13 DISP. CHAR DRIVER 1
18 DISP./SW BANK DR.2
9 DISP.1 SEG.P1
10 DISP.1 SEG.P2
11 DISP.2 SEG.P1
12 DISP.2 SEG.P2
17 DISP.3 SEG.P1
1 PORT 0 STROBE
2 PORT 1 STROBE
3 PORT 2 STROBE
4 PORT 3 STROBE
21 XMIT OK*
12 DISPLAY OK
22 RESET*
35 RESET*
THE REVISION NUMBER OF THIS SHEET IS THE CONTROL NUMBER OF THIS ENTIRE DOCUMENT. THIS REVISION NUMBER MUST INCREASE WHENEVER ANY SHEET IS CHANGED. THE CHANGE MUST BE RECORDED IN THE FORM BELOW.
PCN# 179421
DATE 5 JUN 89 20JUL89 10DEC92
SHT 2 A 0 1
NOTES:
1.UNLESS OTHERWISE SPECIFIED:
ALL RESISTORS ARE 0.25W, 5% AND ARE IN OHMS
ALL CAPACITORS ARE IN MFD
ALL INVERTERS ARE 7404
ALL DIODES ARE 1N4148
2.* INDICATES AN ACTIVE LOW.
REVISIONS
PRINTS TO
1 DPB 30NOV92 404
PCN 179421
MADE BY F.PIERCE 5JUN89
ISSUED F.TRIVANTY 21JUN89
APPROVALS RCR 20JUL89
MEDICAL SYSTEMS DIV OR DEPT
MILWAUKEE, WI LOCATION
46-264982-S
CONT ON SHEET 2 SHT NO. 1

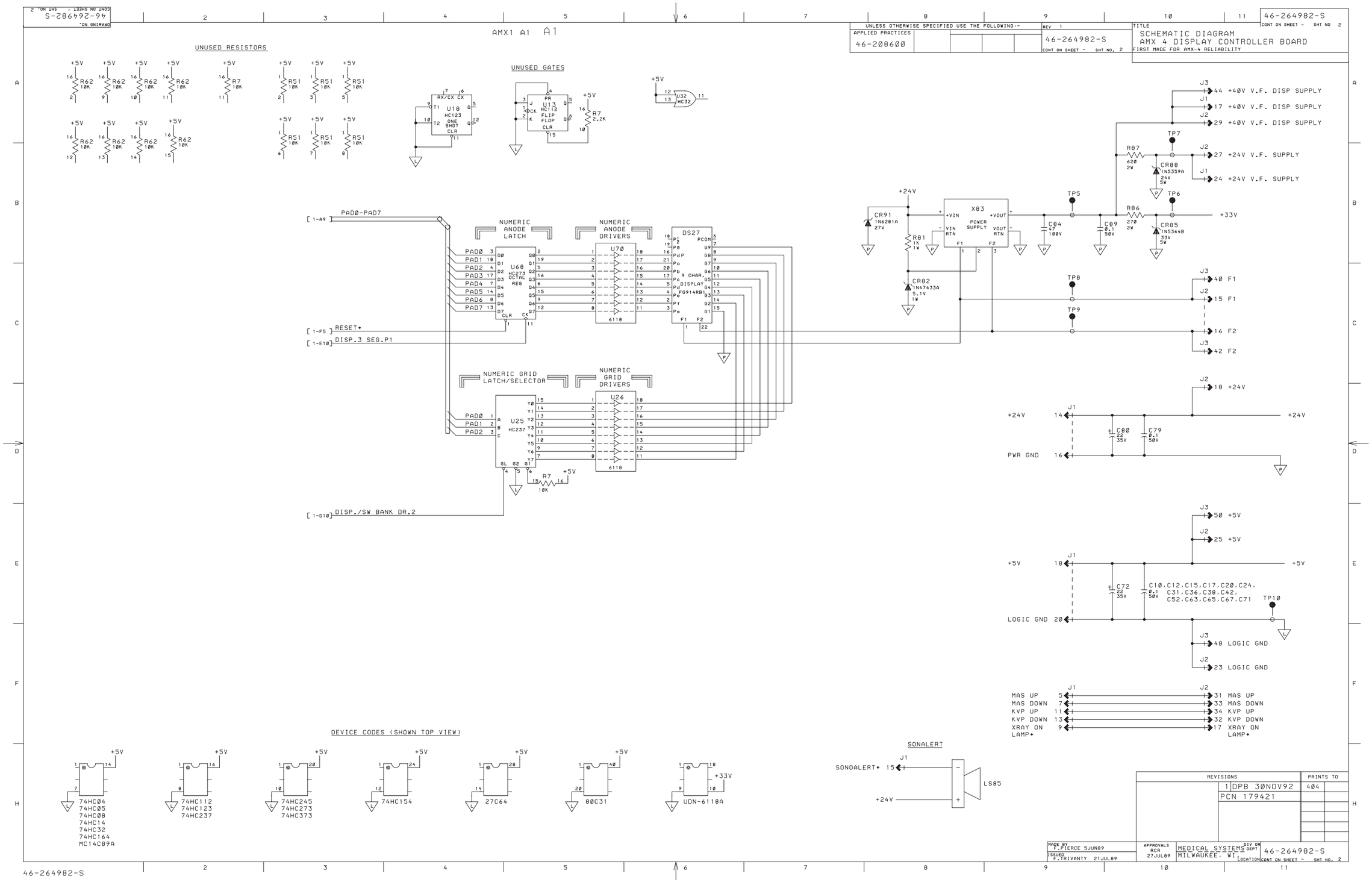
46-264982-S
CONT ON SHEET - SHT NO. 2
AMX1 A1 A1
UNLESS OTHERWISE SPECIFIED USE THE FOLLOWING:-
APPLIED PRACTICES
46-208600
REV 1
TITLE
SCHEMATIC DIAGRAM
AMX 4 DISPLAY CONTROLLER BOARD
FIRST MADE FOR AMX-4 RELIABILITY
UNUSED RESISTORS
UNUSED GATES
U18 HC123 ONE SHOT
U13 HC112 FLIP FLOP
U32 HC32
PAD0-PAD7
NUMERIC ANODE LATCH
NUMERIC ANODE DRIVERS
U68 HC273 OCTAL REG
U70 6118
DS27 9 CHAR. DISPLAY FG914RB1
RESET+
DISP.3 SEG.P1
NUMERIC GRID LATCH/SELECTOR
NUMERIC GRID DRIVERS
U25 HC237
U26 6118
DISP./SW BANK DR.2
X83 POWER SUPPLY
+40V V.F. DISP SUPPLY
+24V V.F. SUPPLY
+33V
F1
F2
+24V
PWR GND
+5V
LOGIC GND
MAS UP
MAS DOWN
KVP UP
KVP DOWN
XRAY ON LAMP+
DEVICE CODES (SHOWN TOP VIEW)
74HC04
74HC05
74HC08
74HC14
74HC32
74HC164
MC14C89A
74HC112
74HC123
74HC237
74HC245
74HC273
74HC373
74HC154
27C64
80C31
UDN-6118A
SONALERT
SONOALERT+
LS85
REVISIONS
1 DPB 30NOV92
PCN 179421
PRINTS TO
404
MADE BY P.FIERCE 5JUN89
ISSUED P.TRIVANTY 21JUL89
APPROVALS RCA 27JUL89
MEDICAL SYSTEMS
MILWAUKEE, WI
DIV OR DEPT
LOCATION
46-264982-S
CONT ON SHEET - SHT NO. 2

SECTION .
DISPLAY
AMX1 A1 A2
. 6(232832G1

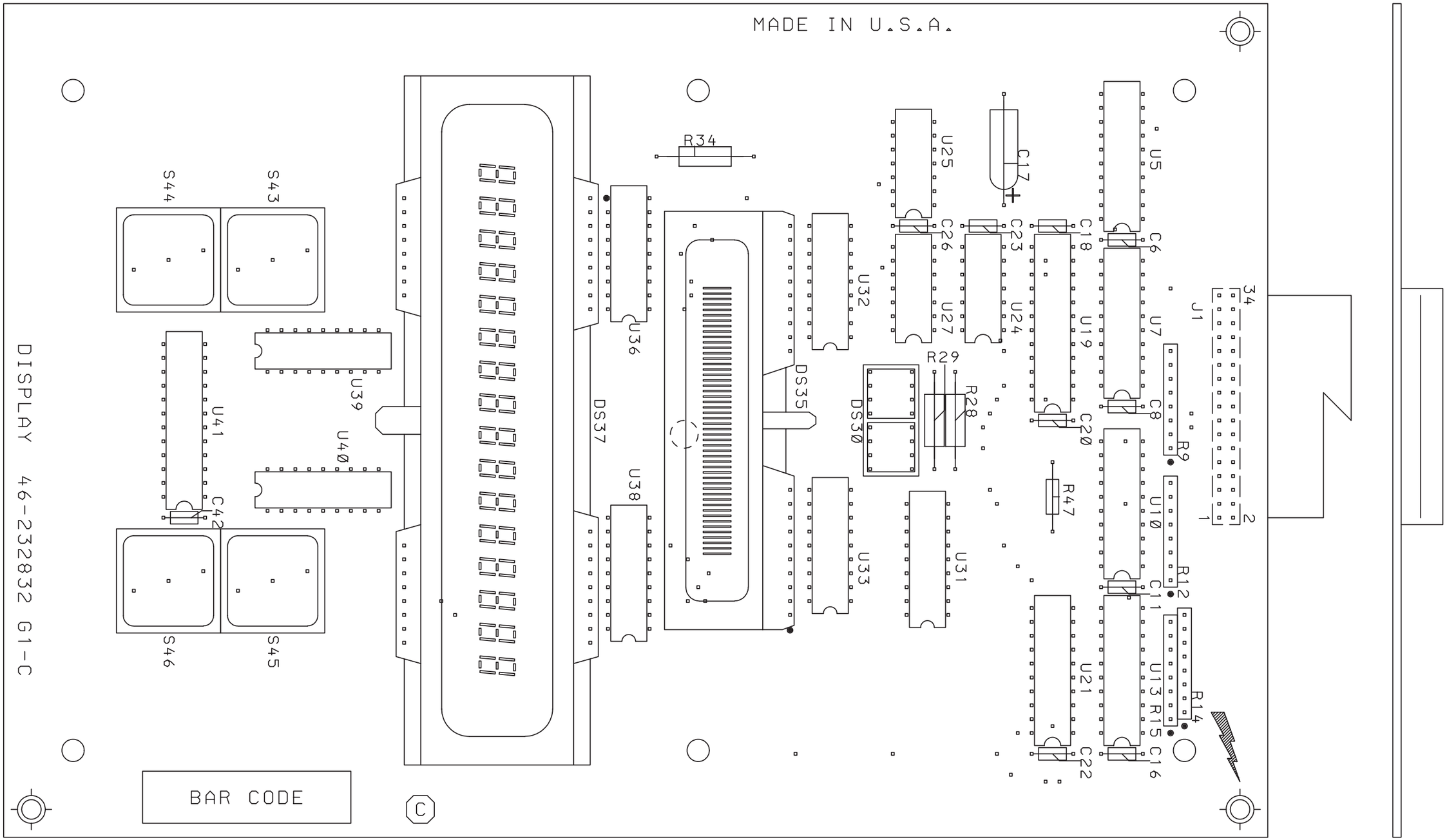

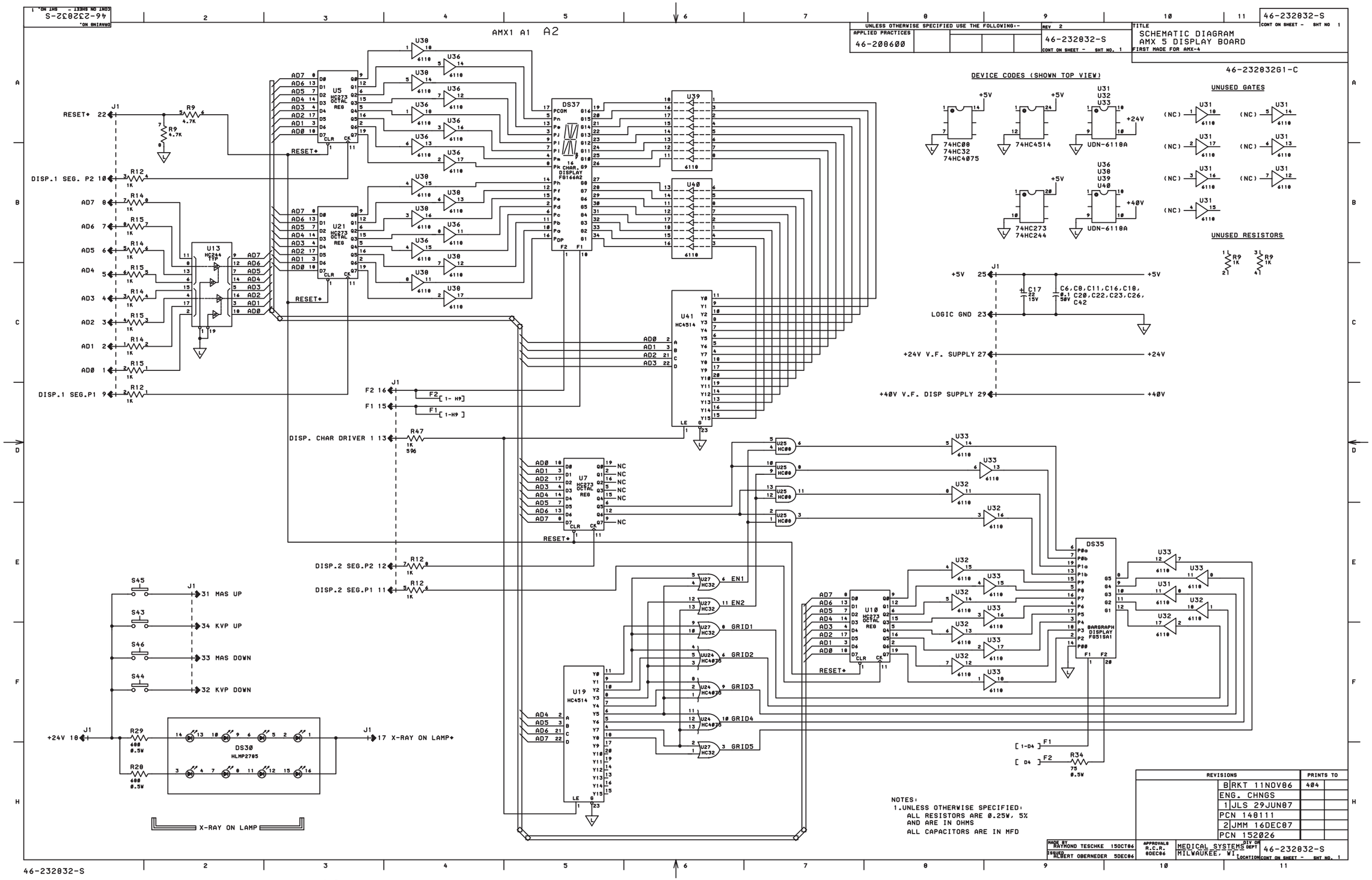
46-232832-S
CONT ON SHEET - SHT NO. 1
DRAWING NO.
AMX1 A1 A2
UNLESS OTHERWISE SPECIFIED USE THE FOLLOWING:-
APPLIED PRACTICES
46-208600
REV 2
46-232832-S
TITLE
SCHEMATIC DIAGRAM
AMX 5 DISPLAY BOARD
FIRST MADE FOR AMX-4
46-232832G1-C
DEVICE CODES (SHOWN TOP VIEW)
74HC00
74HC32
74HC4075
74HC4514
UDN-6118A
74HC273
74HC244
UNUSED GATES
UNUSED RESISTORS
LOGIC GND
+24V V.F. SUPPLY
+40V V.F. DISP SUPPLY
DISP. CHAR DRIVER 1
DISP.2 SEG.P2
DISP.2 SEG.P1
DISP.1 SEG. P2
DISP.1 SEG.P1
RESET+
MAS UP
KVP UP
MAS DOWN
KVP DOWN
X-RAY ON LAMP+
X-RAY ON LAMP
EN1
EN2
GRID1
GRID2
GRID3
GRID4
GRID5
DS37
DS35
DS30
U5
U21
U7
U10
U19
U41
U13
NOTES:
1.UNLESS OTHERWISE SPECIFIED:
ALL RESISTORS ARE 0.25W, 5%
AND ARE IN OHMS
ALL CAPACITORS ARE IN MFD
REVISIONS
PRINTS TO
B RKT 11NOV86 404
ENG. CHNGS
1 JLS 29JUN87
PCN 148111
2 JMM 16DEC87
PCN 152026
MADE BY RAYMOND TESCHKE 15OCT86
ISSUED ALBERT OBERNEDER 5DEC86
APPROVALS R.C.R. 8DEC86
MEDICAL SYSTEMS
MILWAUKEE, WI
46-232832-S

SECTION 5
CONTROLLER
AMX1 A2 A1
46(264974G2

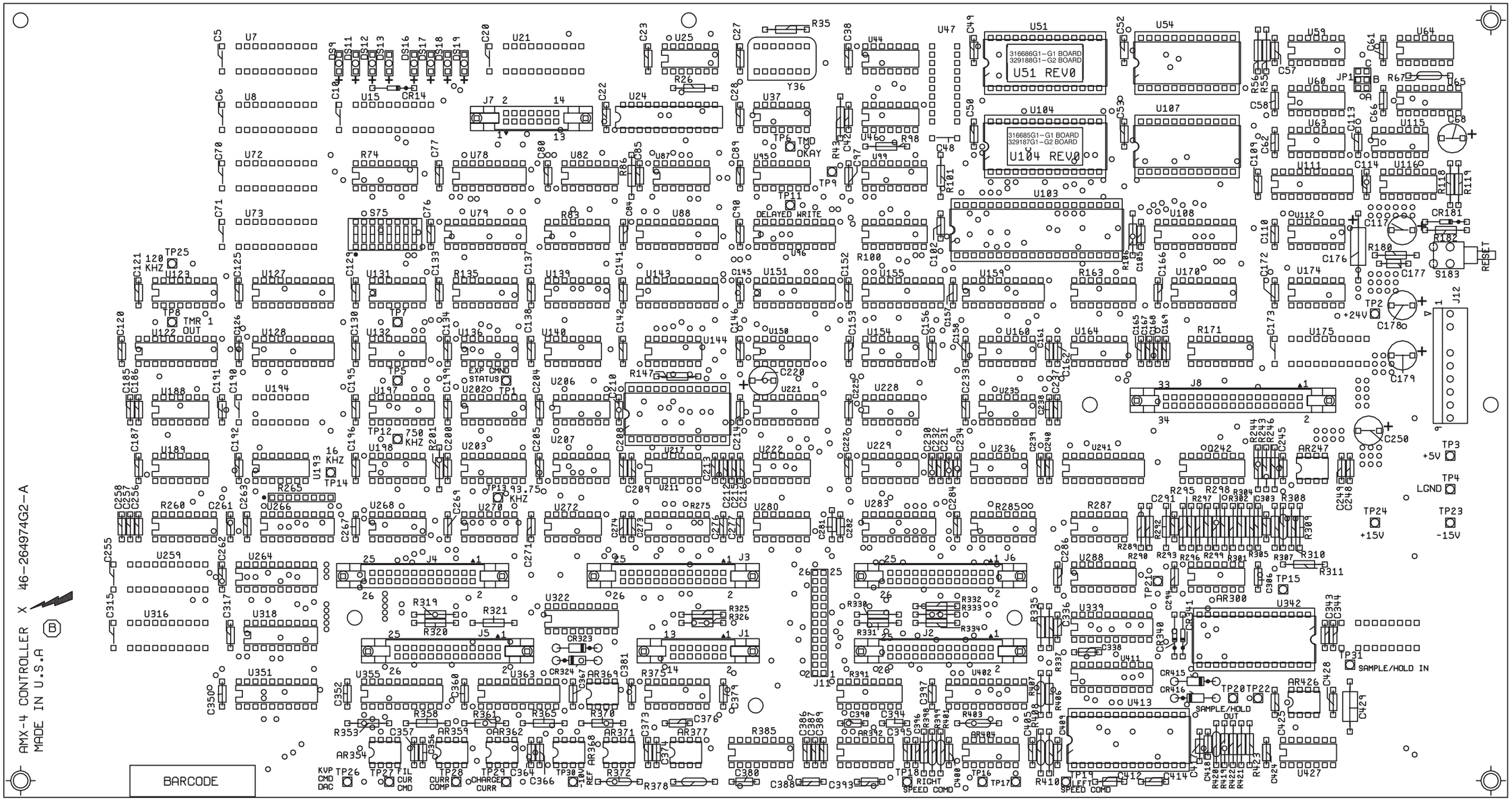

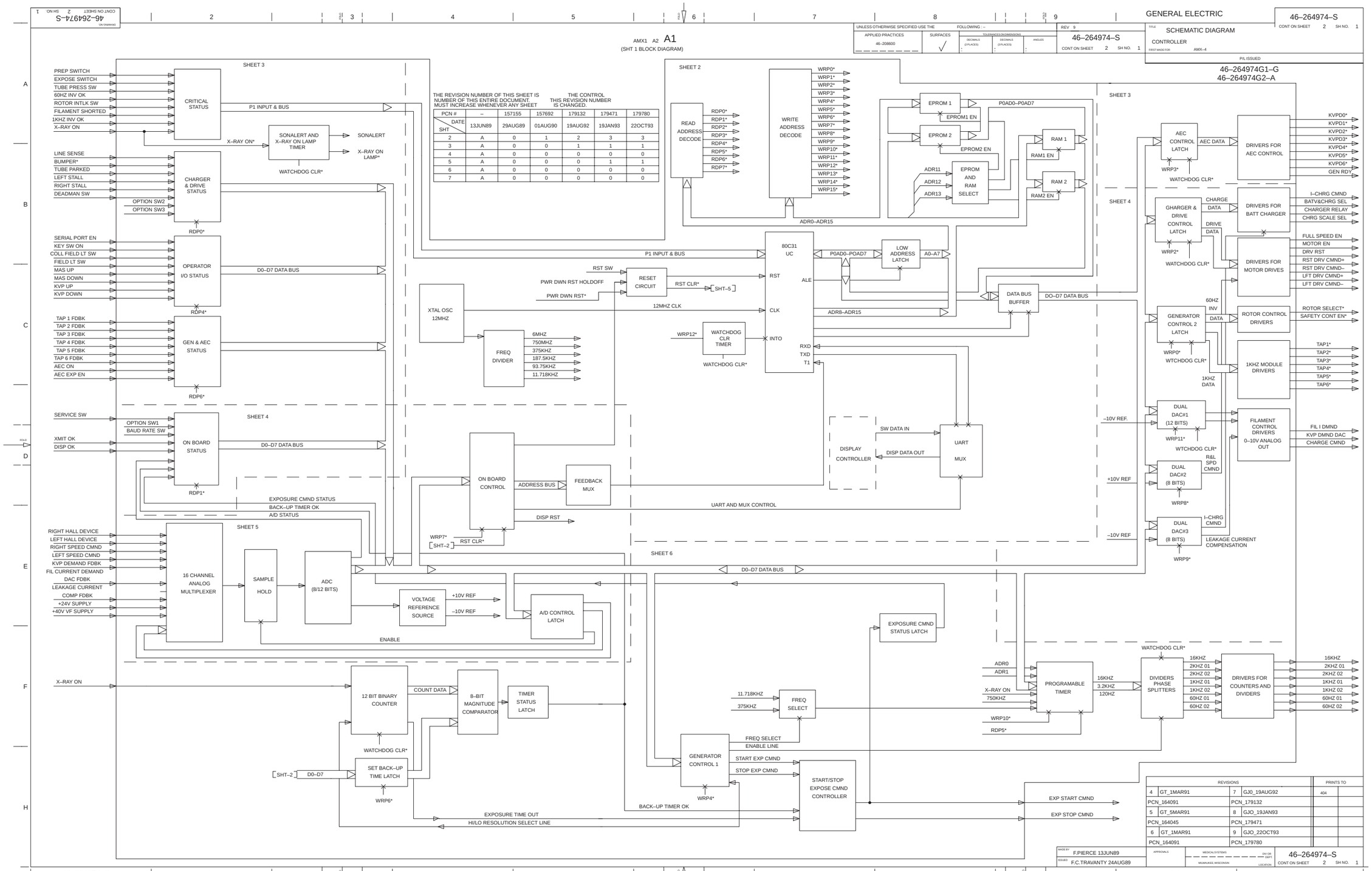
GENERAL ELECTRIC
46–264974–S
SCHEMATIC DIAGRAM
CONTROLLER
AMX–4
46–264974G1–G
46–264974G2–A
AMX1 A2 A1
(SHT 1 BLOCK DIAGRAM)
SHEET 2
SHEET 3
SHEET 4
SHEET 5
SHEET 6
CRITICAL STATUS
CHARGER & DRIVE STATUS
OPERATOR I/O STATUS
GEN & AEC STATUS
ON BOARD STATUS
16 CHANNEL ANALOG MULTIPLEXER
SAMPLE HOLD
ADC (8/12 BITS)
VOLTAGE REFERENCE SOURCE
A/D CONTROL LATCH
SONALERT AND X–RAY ON LAMP TIMER
SONALERT
X–RAY ON LAMP*
WATCHDOG CLR*
XTAL OSC 12MHZ
FREQ DIVIDER
RESET CIRCUIT
WATCHDOG CLR TIMER
READ ADDRESS DECODE
WRITE ADDRESS DECODE
EPROM 1
EPROM 2
EPROM AND RAM SELECT
RAM 1
RAM 2
80C31 UC
LOW ADDRESS LATCH
DATA BUS BUFFER
ON BOARD CONTROL
FEEDBACK MUX
DISPLAY CONTROLLER
UART MUX
AEC CONTROL LATCH
DRIVERS FOR AEC CONTROL
GHARGER & DRIVE CONTROL LATCH
DRIVERS FOR BATT CHARGER
DRIVERS FOR MOTOR DRIVES
GENERATOR CONTROL 2 LATCH
ROTOR CONTROL DRIVERS
1KHZ MODULE DRIVERS
DUAL DAC#1 (12 BITS)
DUAL DAC#2 (8 BITS)
DUAL DAC#3 (8 BITS)
FILAMENT CONTROL DRIVERS 0–10V ANALOG OUT
12 BIT BINARY COUNTER
8–BIT MAGNITUDE COMPARATOR
TIMER STATUS LATCH
SET BACK–UP TIME LATCH
FREQ SELECT
GENERATOR CONTROL 1
START/STOP EXPOSE CMND CONTROLLER
EXPOSURE CMND STATUS LATCH
PROGRAMABLE TIMER
DIVIDERS PHASE SPLITTERS
DRIVERS FOR COUNTERS AND DIVIDERS
THE REVISION NUMBER OF THIS SHEET IS NUMBER OF THIS ENTIRE DOCUMENT. MUST INCREASE WHENEVER ANY SHEET
THE CONTROL THIS REVISION NUMBER IS CHANGED.
PCN # – 157155 157692 179132 179471 179780
DATE 13JUN89 29AUG89 01AUG90 19AUG92 19JAN93 22OCT93
SHT 2 A 0 1 2 3 3
3 A 0 0 1 1 1
4 A 0 0 0 0 0
5 A 0 0 0 1 1
6 A 0 0 0 0 0
7 A 0 0 0 0 0
REVISIONS
4 GT_1MAR91 PCN_164091
5 GT_5MAR91 PCN_164045
6 GT_1MAR91 PCN_164091
7 GJ0_19AUG92 PCN_179132
8 GJO_19JAN93 PCN_179471
9 GJO_22OCT93 PCN_179780
PRINTS TO 404
F.PIERCE 13JUN89
F.C.TRAVANTY 24AUG89
46–264974–S

▲ Per PCN 180369

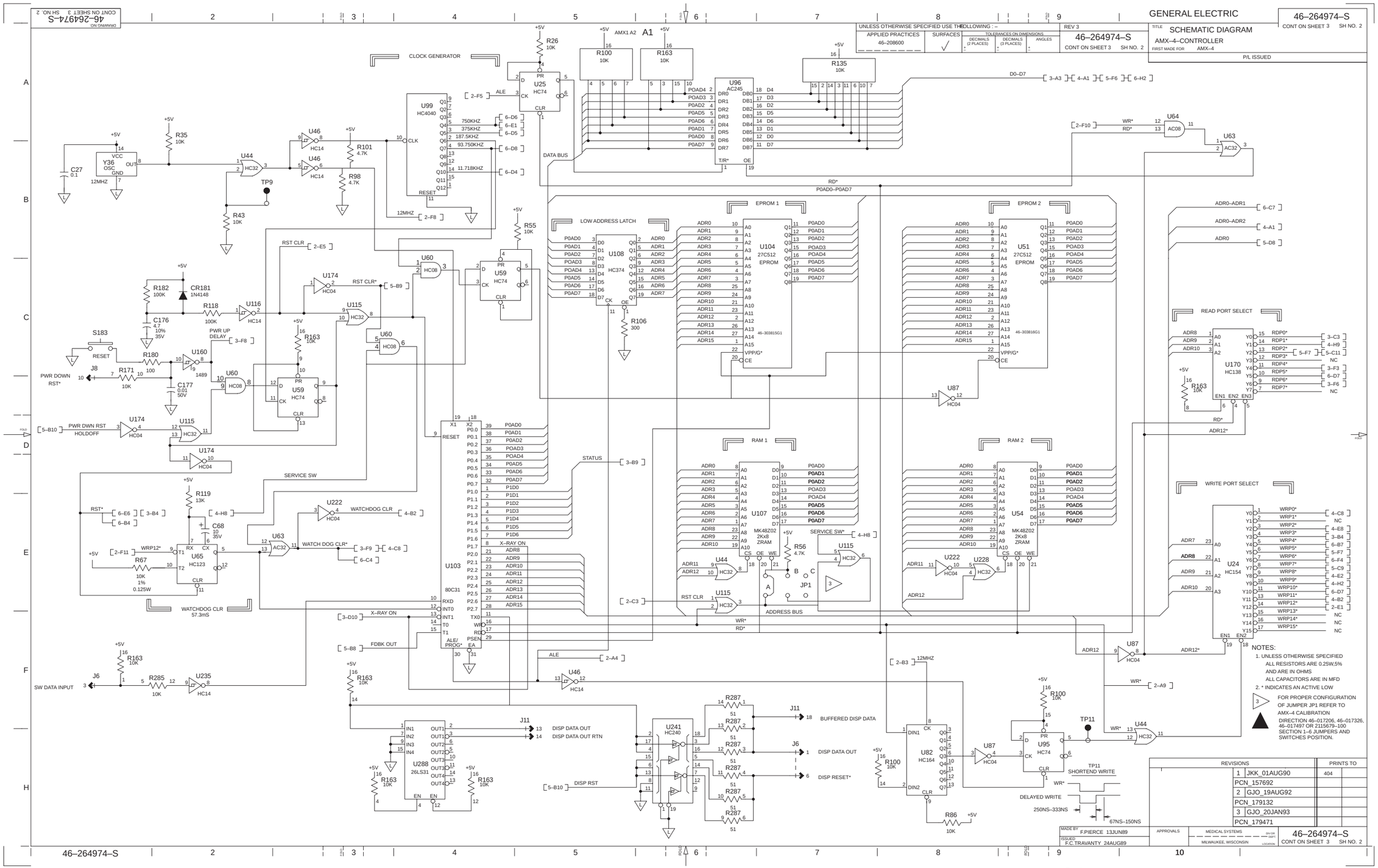

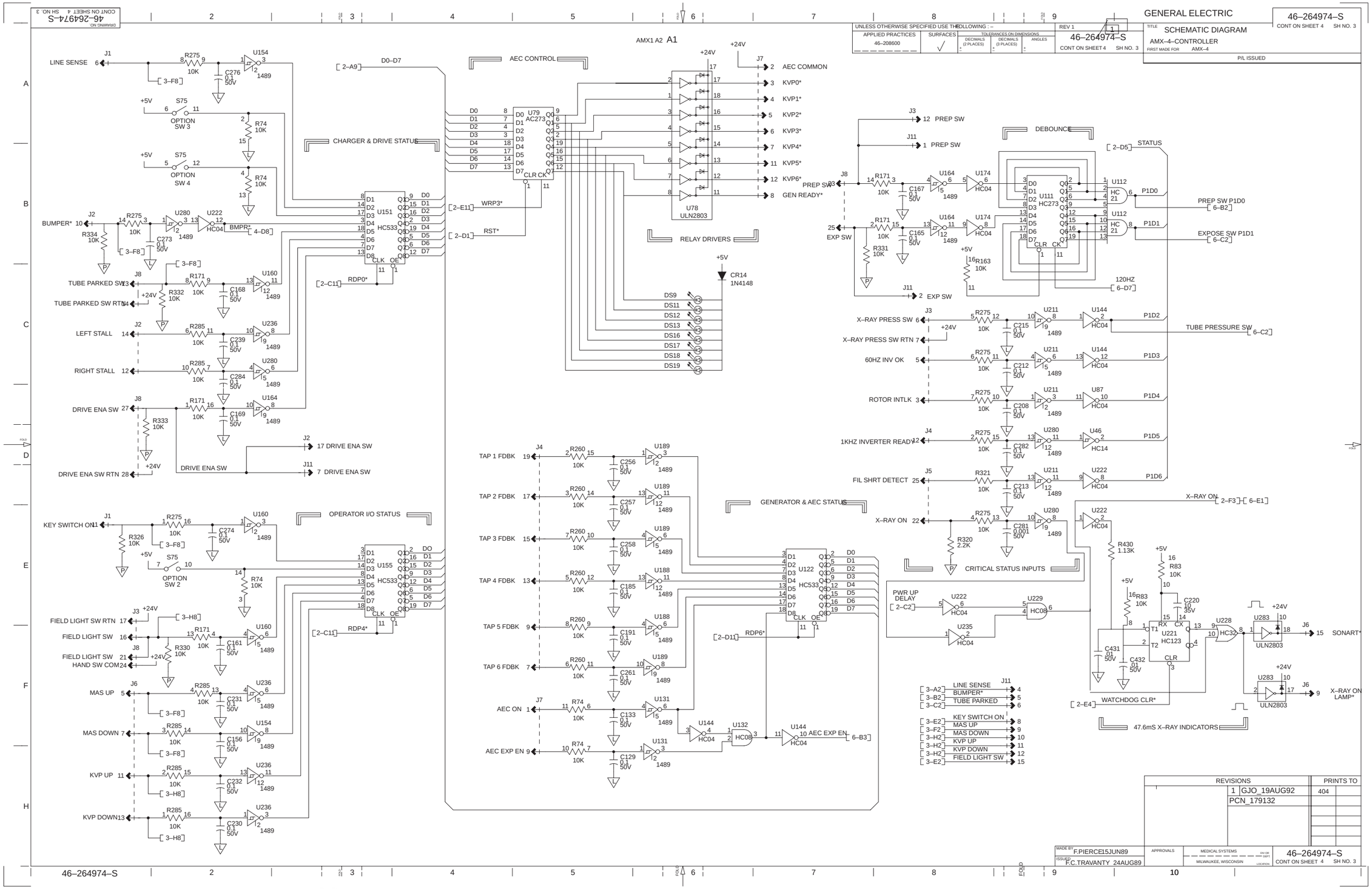
GENERAL ELECTRIC
46−264974−S
CONT ON SHEET 4 SH NO. 3
SCHEMATIC DIAGRAM
AMX−4−CONTROLLER
AMX1 A2 A1
LINE SENSE
BUMPER*
TUBE PARKED SW
TUBE PARKED SW RTN
LEFT STALL
RIGHT STALL
DRIVE ENA SW
DRIVE ENA SW RTN
KEY SWITCH ON
FIELD LIGHT SW RTN
FIELD LIGHT SW
FIELD LIGHT SW HAND SW COM
MAS UP
MAS DOWN
KVP UP
KVP DOWN
OPTION SW 3
OPTION SW 4
OPTION SW 2
CHARGER & DRIVE STATUS
OPERATOR I/O STATUS
AEC CONTROL
RELAY DRIVERS
AEC COMMON
KVP0*
KVP1*
KVP2*
KVP3*
KVP4*
KVP5*
KVP6*
GEN READY*
ULN2803
TAP 1 FDBK
TAP 2 FDBK
TAP 3 FDBK
TAP 4 FDBK
TAP 5 FDBK
TAP 6 FDBK
AEC ON
AEC EXP EN
GENERATOR & AEC STATUS
PWR UP DELAY
PREP SW
EXP SW
DEBOUNCE
STATUS
PREP SW P1D0
EXPOSE SW P1D1
120HZ
X−RAY PRESS SW
X−RAY PRESS SW RTN
TUBE PRESSURE SW
60HZ INV OK
ROTOR INTLK
1KHZ INVERTER READY
FIL SHRT DETECT
X−RAY ON
CRITICAL STATUS INPUTS
WATCHDOG CLR*
47.6mS X−RAY INDICATORS
SONART*
X−RAY ON LAMP*
REVISIONS
1 GJO_19AUG92
PCN_179132
PRINTS TO
MADE BY F.PIERCE15JUN89
ISSUED F.C.TRAVANTY 24AUG89
MEDICAL SYSTEMS
MILWAUKEE, WISCONSIN

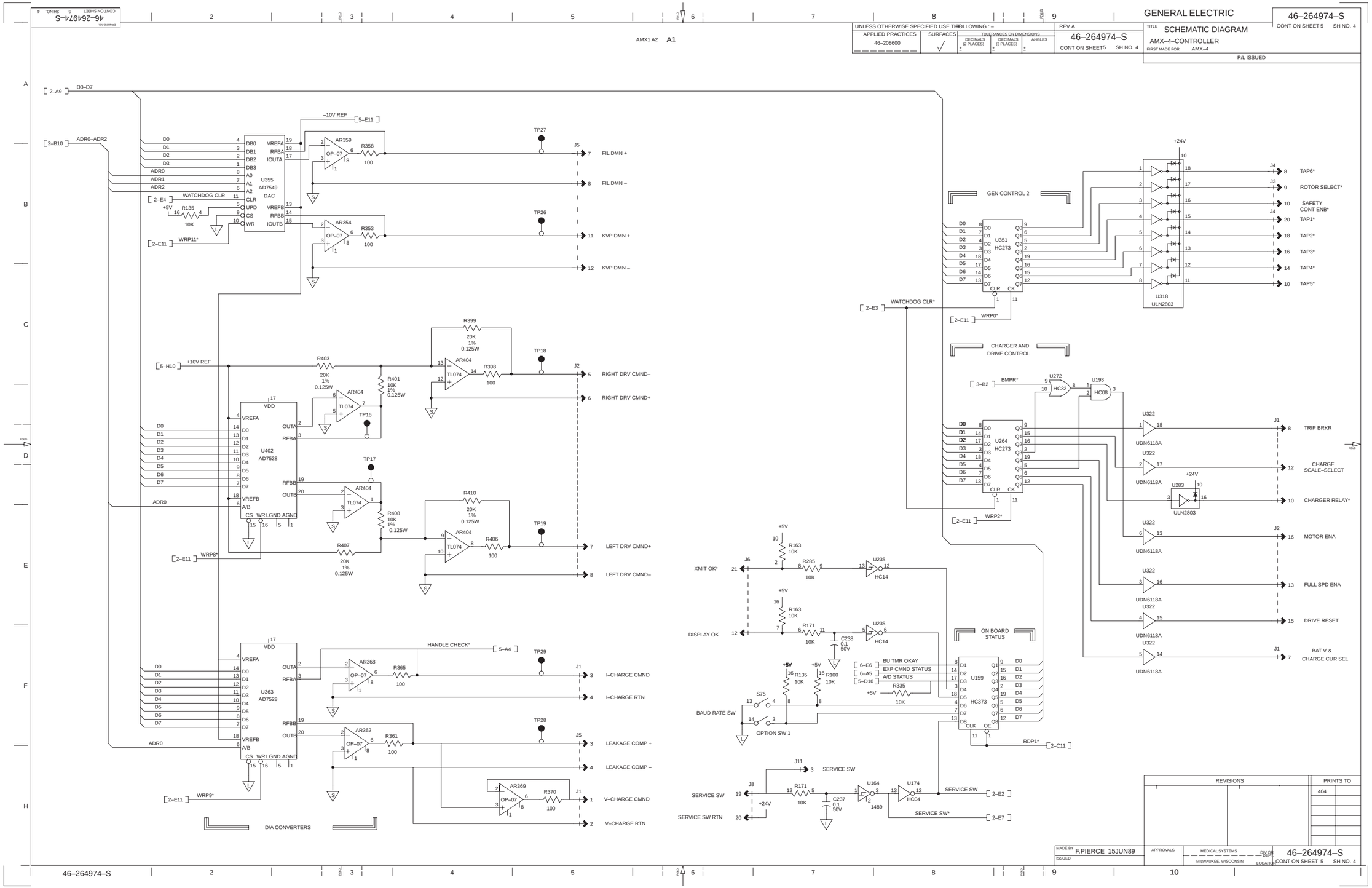
GENERAL ELECTRIC
46–264974–S
CONT ON SHEET 5 SH NO. 4
SCHEMATIC DIAGRAM
AMX–4–CONTROLLER
FIRST MADE FOR AMX–4
P/L ISSUED
UNLESS OTHERWISE SPECIFIED USE THE FOLLOWING : –
APPLIED PRACTICES
46–208600
SURFACES
TOLERANCES ON DIMENSIONS
DECIMALS (2 PLACES)
DECIMALS (3 PLACES)
ANGLES
REV A
46–264974–S
CONT ON SHEET5 SH NO. 4
AMX1 A2 A1
D0–D7
ADR0–ADR2
WATCHDOG CLR
WRP11*
–10V REF
U355 AD7549 DAC
AR359 OP–07 R358 100 TP27 J5 7 FIL DMN +
8 FIL DMN –
AR354 OP–07 R353 100 TP26 11 KVP DMN +
12 KVP DMN –
+10V REF
WRP8*
U402 AD7528
R403 20K 1% 0.125W
R401 10K 1% 0.125W
AR404 TL074 TP16
R399 20K 1% 0.125W
R398 100 TP18 J2 5 RIGHT DRV CMND–
6 RIGHT DRV CMND+
TP17
R408 10K 1% 0.125W
R407 20K 1% 0.125W
R410 20K 1% 0.125W
R406 100 TP19 7 LEFT DRV CMND+
8 LEFT DRV CMND–
HANDLE CHECK*
WRP9*
U363 AD7528
AR368 OP–07 R365 100 TP29 J1 3 I–CHARGE CMND
4 I–CHARGE RTN
AR362 OP–07 R361 100 TP28 J5 3 LEAKAGE COMP +
4 LEAKAGE COMP –
AR369 OP–07 R370 100 J1 1 V–CHARGE CMND
2 V–CHARGE RTN
D/A CONVERTERS
GEN CONTROL 2
U351 HC273
WRP0*
WATCHDOG CLR*
+24V
U318 ULN2803
J4 8 TAP6*
J3 9 ROTOR SELECT*
10 SAFETY CONT ENB*
J4 20 TAP1*
18 TAP2*
16 TAP3*
14 TAP4*
10 TAP5*
CHARGER AND DRIVE CONTROL
BMPR*
U272 HC32
U193 HC08
U264 HC273
WRP2*
U322 UDN6118A
J1 8 TRIP BRKR
12 CHARGE SCALE–SELECT
U283 ULN2803
10 CHARGER RELAY*
J2 16 MOTOR ENA
13 FULL SPD ENA
15 DRIVE RESET
J1 7 BAT V & CHARGE CUR SEL
XMIT OK*
J6
R163 10K
R285 10K
U235 HC14
DISPLAY OK
R171 10K
C238 0.1 50V
ON BOARD STATUS
BU TMR OKAY
EXP CMND STATUS
A/D STATUS
U159 HC373
R135 10K
R100 10K
R335 10K
BAUD RATE SW
S75
OPTION SW 1
RDP1*
SERVICE SW
J11
J8
R171 10K
C237 0.1 50V
U164 1489
U174 HC04
SERVICE SW RTN
SERVICE SW*
REVISIONS
PRINTS TO
404
MADE BY F.PIERCE 15JUN89
ISSUED
APPROVALS
MEDICAL SYSTEMS
MILWAUKEE, WISCONSIN
DIV CODE
DEPT
LOCATION
46–264974–S
CONT ON SHEET 5 SH NO. 4

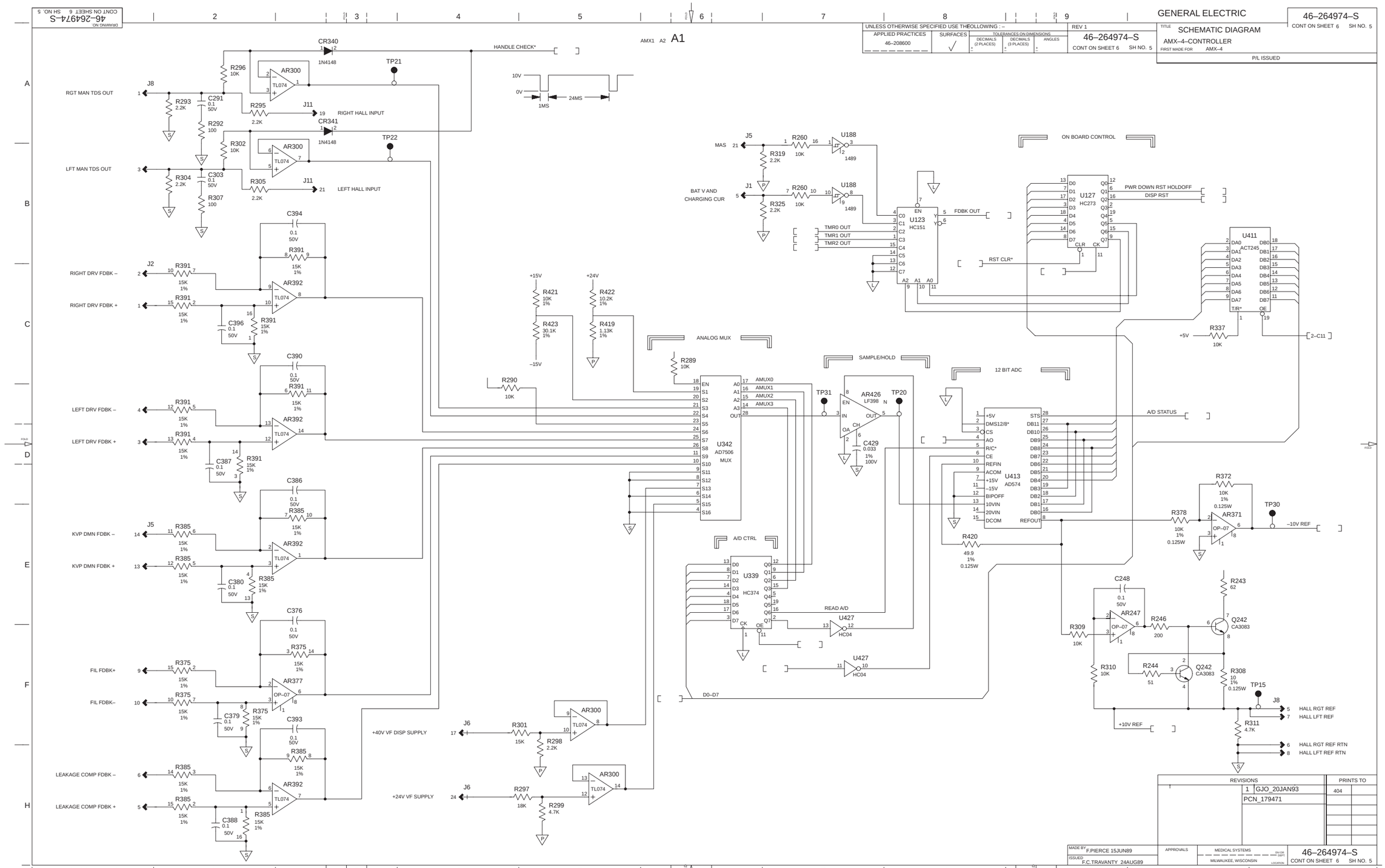
GENERAL ELECTRIC
46–264974–S
CONT ON SHEET 6 SH NO. 5
TITLE SCHEMATIC DIAGRAM
AMX–4–CONTROLLER
FIRST MADE FOR AMX–4
P/L ISSUED
UNLESS OTHERWISE SPECIFIED USE THE FOLLOWING : –
APPLIED PRACTICES 46–208600
SURFACES
TOLERANCES ON DIMENSIONS
REV 1
AMX1 A2 A1
HANDLE CHECK*
RGT MAN TDS OUT
LFT MAN TDS OUT
RIGHT HALL INPUT
LEFT HALL INPUT
RIGHT DRV FDBK –
RIGHT DRV FDBK +
LEFT DRV FDBK –
LEFT DRV FDBK +
KVP DMN FDBK –
KVP DMN FDBK +
FIL FDBK+
FIL FDBK–
LEAKAGE COMP FDBK –
LEAKAGE COMP FDBK +
+40V VF DISP SUPPLY
+24V VF SUPPLY
ANALOG MUX
SAMPLE/HOLD
12 BIT ADC
A/D CTRL
ON BOARD CONTROL
MAS
BAT V AND CHARGING CUR
FDBK OUT
TMR0 OUT
TMR1 OUT
TMR2 OUT
RST CLR*
PWR DOWN RST HOLDOFF
DISP RST
A/D STATUS
READ A/D
D0–D7
–10V REF
+10V REF
HALL RGT REF
HALL LFT REF
HALL RGT REF RTN
HALL LFT REF RTN
2–C11
REVISIONS
1 GJO_20JAN93
PCN_179471
PRINTS TO
MADE BY F.PIERCE 15JUN89
ISSUED F.C.TRAVANTY 24AUG89
APPROVALS
MEDICAL SYSTEMS
MILWAUKEE, WISCONSIN
46–264974–S
CONT ON SHEET 6 SH NO. 5

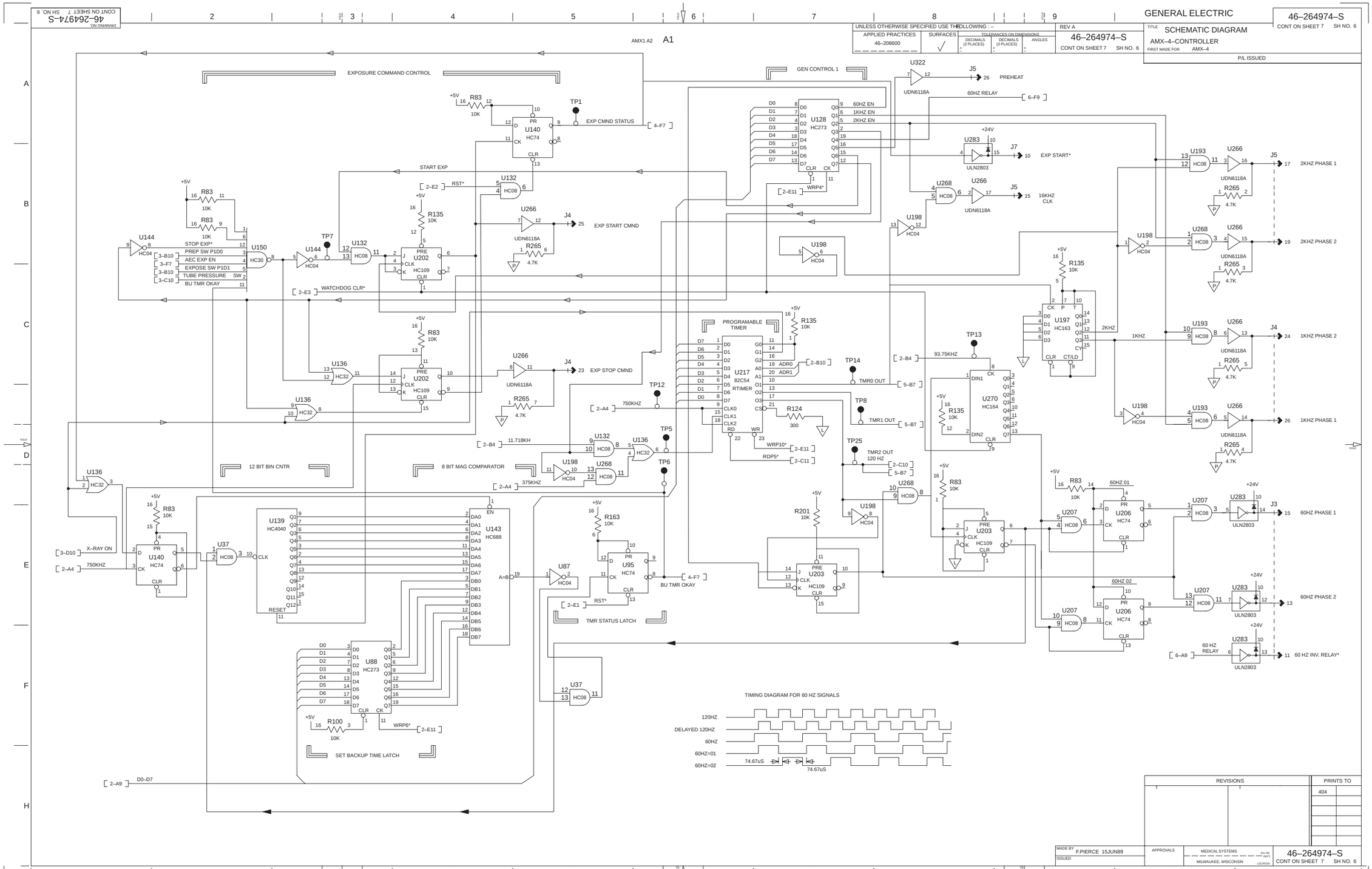
GENERAL ELECTRIC
46–264974–S
CONT ON SHEET 7 SH NO. 6
TITLE SCHEMATIC DIAGRAM
AMX–4–CONTROLLER
FIRST MADE FOR AMX–4
P/L ISSUED
REV A
46–264974–S
CONT ON SHEET 7 SH NO. 6
UNLESS OTHERWISE SPECIFIED USE THE FOLLOWING : –
APPLIED PRACTICES
46–208600
SURFACES
TOLERANCES ON DIMENSIONS
DECIMALS (2 PLACES)
DECIMALS (3 PLACES)
ANGLES
AMX1 A2 A1
EXPOSURE COMMAND CONTROL
GEN CONTROL 1
12 BIT BIN CNTR
8 BIT MAG COMPARATOR
PROGRAMABLE TIMER
SET BACKUP TIME LATCH
TMR STATUS LATCH
TIMING DIAGRAM FOR 60 HZ SIGNALS
120HZ
DELAYED 120HZ
60HZ
60HZ=01
60HZ=02
74.67uS
MADE BY F.PIERCE 15JUN89
ISSUED
APPROVALS
MEDICAL SYSTEMS
MILWAUKEE, WISCONSIN
REVISIONS
PRINTS TO
404
46–264974–S
CONT ON SHEET 7 SH NO. 6

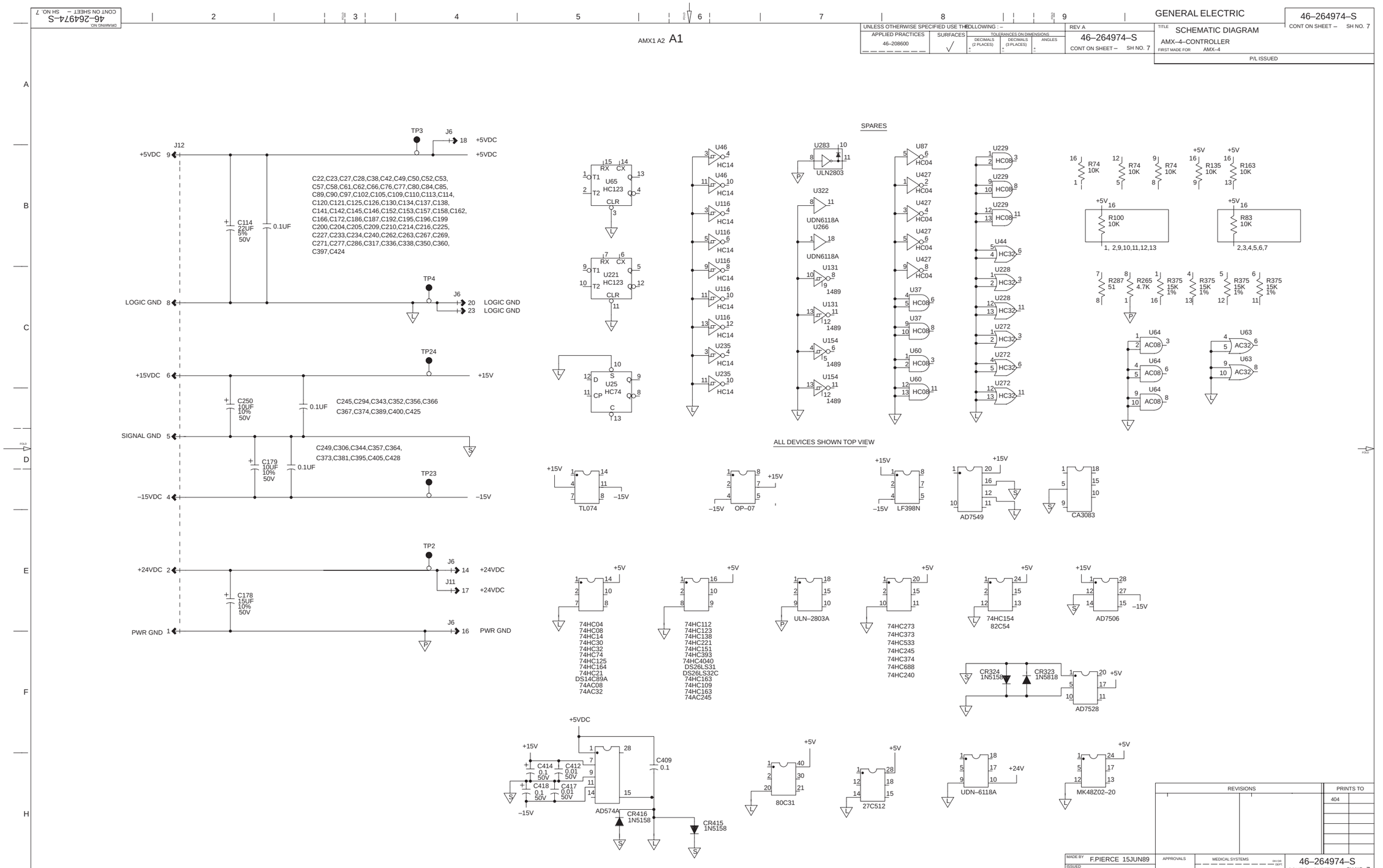
GENERAL ELECTRIC
46–264974–S
CONT ON SHEET – SH NO. 7
SCHEMATIC DIAGRAM
AMX–4–CONTROLLER
FIRST MADE FOR AMX–4
P/L ISSUED
REV A
UNLESS OTHERWISE SPECIFIED USE THE FOLLOWING : –
APPLIED PRACTICES
46–208600
SURFACES
TOLERANCES ON DIMENSIONS
DRAWING NO 46–264974–S
CONT ON SHEET – SH NO. 7
AMX1 A2 A1
J12
+5VDC
TP3
J6
C22,C23,C27,C28,C38,C42,C49,C50,C52,C53,
C57,C58,C61,C62,C66,C76,C77,C80,C84,C85,
C89,C90,C97,C102,C105,C109,C110,C113,C114,
C120,C121,C125,C126,C130,C134,C137,C138,
C141,C142,C145,C146,C152,C153,C157,C158,C162,
C166,C172,C186,C187,C192,C195,C196,C199
C200,C204,C205,C209,C210,C214,C216,C225,
C227,C233,C234,C240,C262,C263,C267,C269,
C271,C277,C286,C317,C336,C338,C350,C360,
C397,C424
C114 22UF 5% 50V
0.1UF
LOGIC GND
TP4
TP24
+15VDC
+15V
C250 10UF 10% 50V
C245,C294,C343,C352,C356,C366
C367,C374,C389,C400,C425
SIGNAL GND
C179 10UF 10% 50V
C249,C306,C344,C357,C364,
C373,C381,C395,C405,C428
TP23
–15VDC
–15V
TP2
+24VDC
+24VDC
J11
C178 15UF 10% 50V
PWR GND
U65 HC123
U221 HC123
U25 HC74
U46 HC14
U116 HC14
U235 HC14
SPARES
U283 ULN2803
U322 UDN6118A
U266 UDN6118A
U131 1489
U154 1489
U87 HC04
U427 HC04
U37 HC08
U60 HC08
U229 HC08
U44 HC32
U228 HC32
U272 HC32
R74 10K
R135 10K
R163 10K
R100 10K
R83 10K
R287 51
R265 4.7K
R375 15K 1%
U64 AC08
U63 AC32
ALL DEVICES SHOWN TOP VIEW
TL074
OP–07
LF398N
AD7549
CA3083
74HC04
74HC08
74HC14
74HC30
74HC32
74HC74
74HC125
74HC164
74HC21
DS14C89A
74AC08
74AC32
74HC112
74HC123
74HC138
74HC221
74HC151
74HC393
74HC4040
DS26LS31
DS26LS32C
74HC163
74HC109
74HC163
74AC245
ULN–2803A
74HC273
74HC373
74HC533
74HC245
74HC374
74HC688
74HC240
74HC154
82C54
AD7506
CR324 1N5158
CR323 1N5818
AD7528
C414 0.1 50V
C412 0.01 50V
C418 0.1 50V
C417 0.01 50V
C409 0.1
AD574A
CR416 1N5158
CR415 1N5158
80C31
27C512
UDN–6118A
MK48Z02–20
REVISIONS
PRINTS TO
404
MADE BY F.PIERCE 15JUN89
ISSUED
APPROVALS
MEDICAL SYSTEMS
MILWAUKEE, WISCONSIN
46–264974–S
CONT ON SHEET – SH NO. 7

SECTION 6
BATTERY CHARGER
AMX1 A3 A1
. 6(288786G2

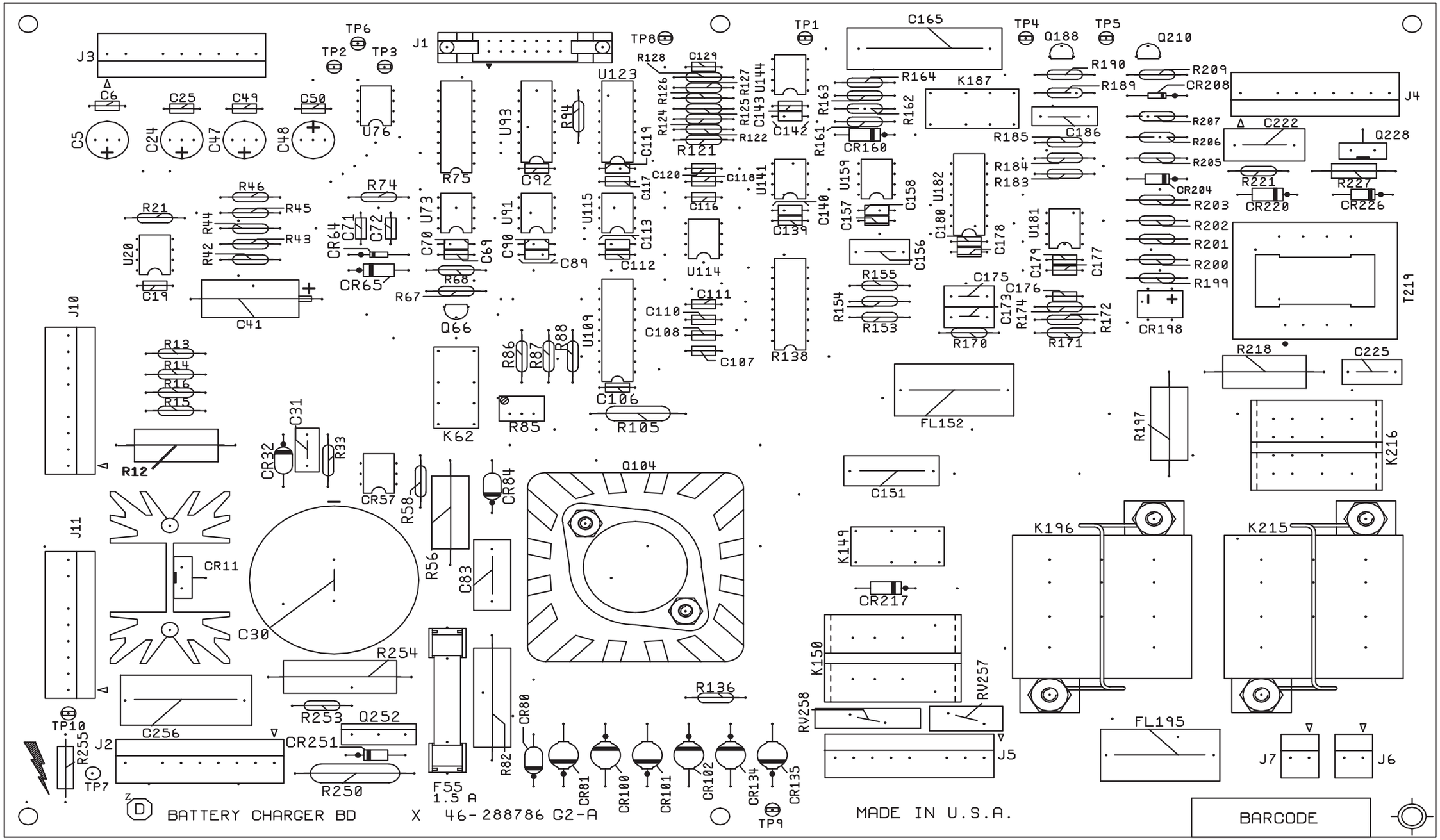

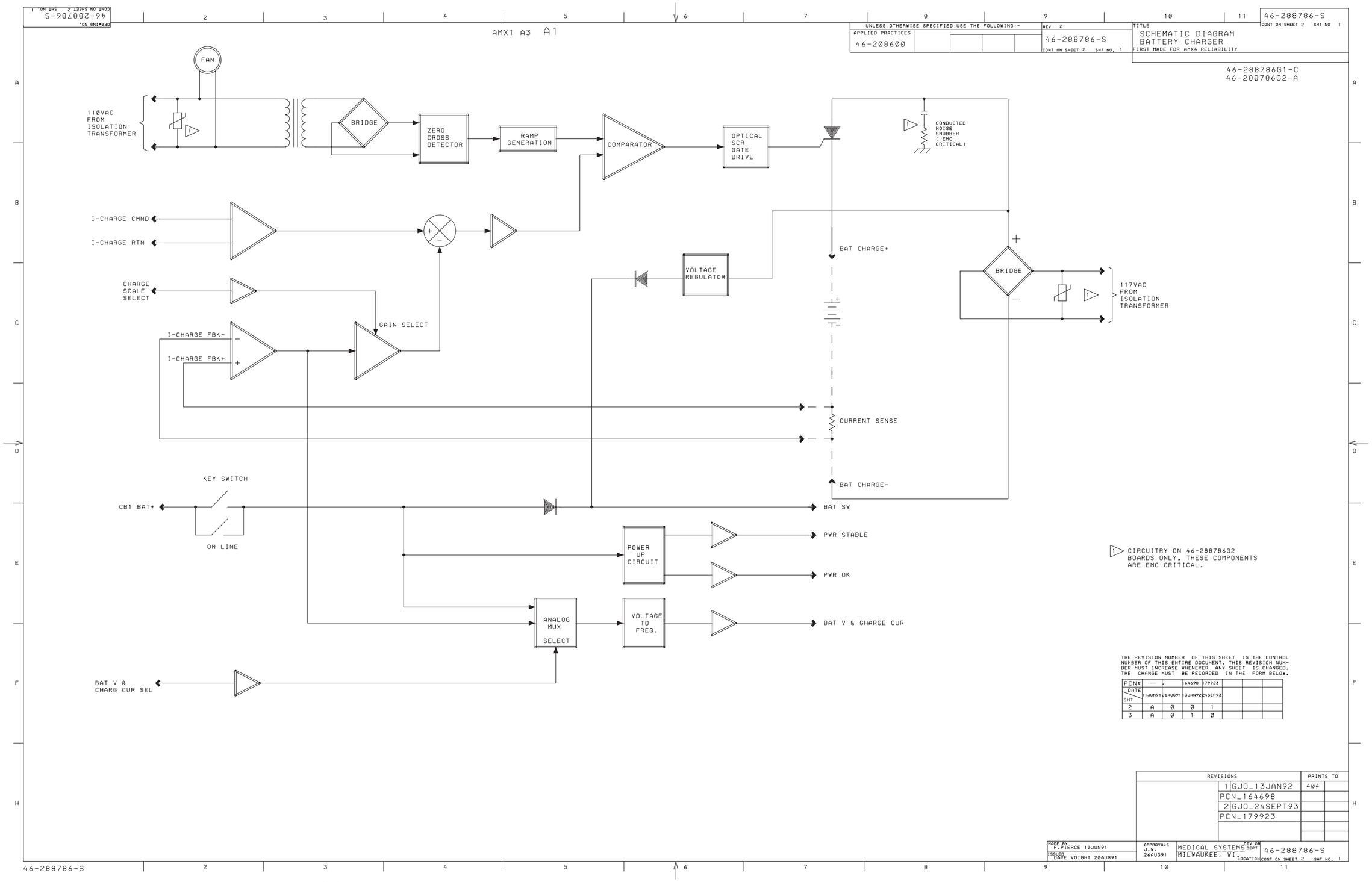
46-288786-S
CONT ON SHEET 2 SHT NO. 1
AMX1 A3 A1
UNLESS OTHERWISE SPECIFIED USE THE FOLLOWING:-
APPLIED PRACTICES
46-208600
REV 2
46-288786-S
CONT ON SHEET 2 SHT NO. 1
TITLE
SCHEMATIC DIAGRAM
BATTERY CHARGER
FIRST MADE FOR AMX4 RELIABILITY
46-288786G1-C
46-288786G2-A
FAN
110VAC FROM ISOLATION TRANSFORMER
BRIDGE
ZERO CROSS DETECTOR
RAMP GENERATION
COMPARATOR
OPTICAL SCR GATE DRIVE
CONDUCTED NOISE SNUBBER (EMC CRITICAL)
I-CHARGE CMND
I-CHARGE RTN
CHARGE SCALE SELECT
GAIN SELECT
I-CHARGE FBK-
I-CHARGE FBK+
VOLTAGE REGULATOR
BAT CHARGE+
BRIDGE
117VAC FROM ISOLATION TRANSFORMER
CURRENT SENSE
BAT CHARGE-
KEY SWITCH
CB1 BAT+
ON LINE
BAT SW
POWER UP CIRCUIT
PWR STABLE
PWR OK
ANALOG MUX SELECT
VOLTAGE TO FREQ.
BAT V & GHARGE CUR
BAT V & CHARG CUR SEL
CIRCUITRY ON 46-288786G2 BOARDS ONLY. THESE COMPONENTS ARE EMC CRITICAL.
THE REVISION NUMBER OF THIS SHEET IS THE CONTROL NUMBER OF THIS ENTIRE DOCUMENT. THIS REVISION NUMBER MUST INCREASE WHENEVER ANY SHEET IS CHANGED. THE CHANGE MUST BE RECORDED IN THE FORM BELOW.
PCN# — 164698 179923
DATE 11JUN91 26AUG91 13JAN92 24SEP93
SHT
2 A 0 0 1
3 A 0 1 0
REVISIONS
PRINTS TO
1 GJO_13JAN92 404
PCN_164698
2 GJO_24SEPT93
PCN_179923
MADE BY P.FIERCE 10JUN91
ISSUED DAVE VOIGHT 20AUG91
APPROVALS J.W. 26AUG91
MEDICAL SYSTEMS DIV OR DEPT
MILWAUKEE, WI LOCATION
46-288786-S
CONT ON SHEET 2 SHT NO. 1
46-288786-S

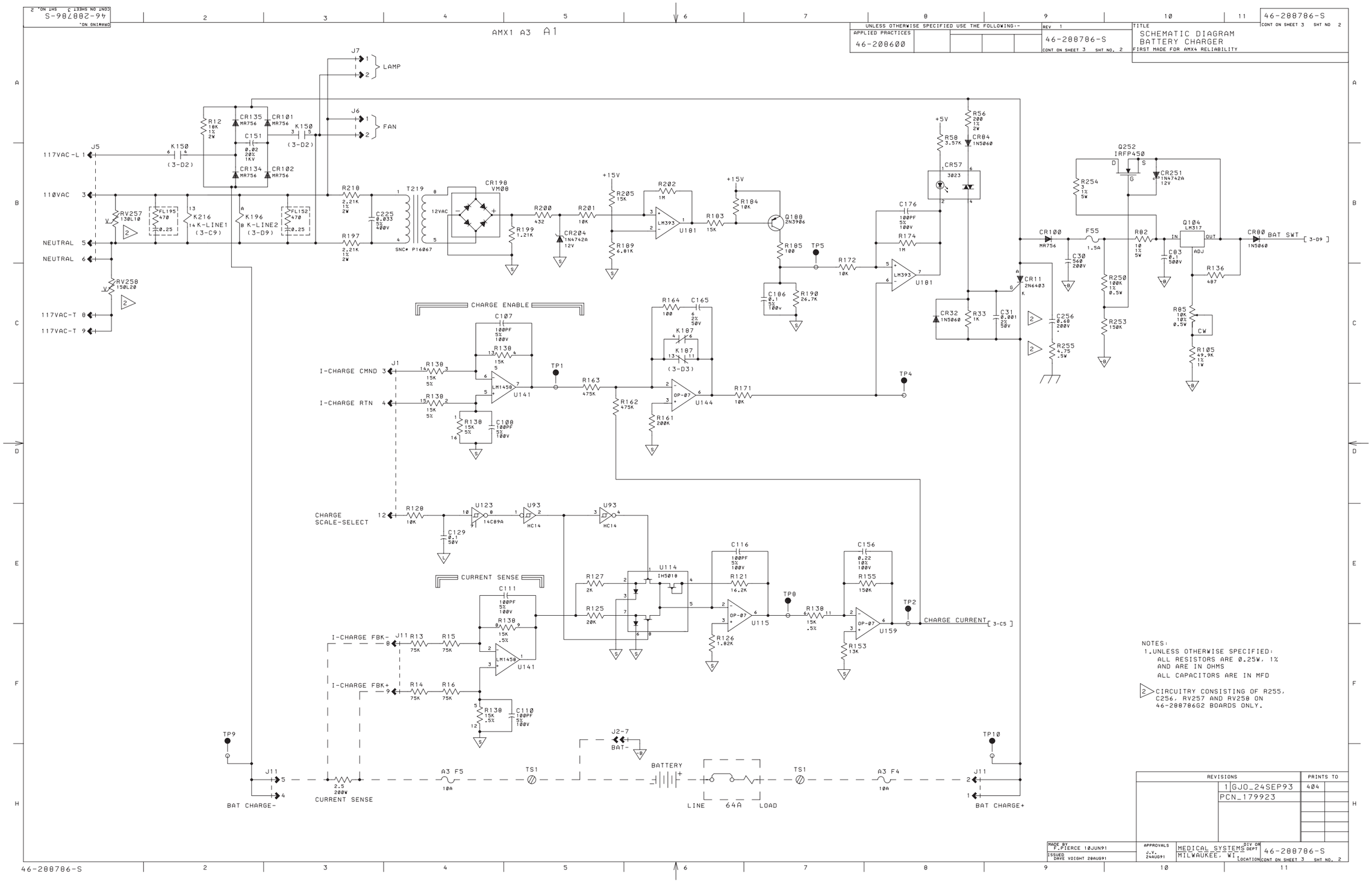
46-288786-S
CONT ON SHEET 3 SHT NO. 2
AMX1 A3 A1
UNLESS OTHERWISE SPECIFIED USE THE FOLLOWING:-
APPLIED PRACTICES
46-208600
REV 1
46-288786-S
CONT ON SHEET 3 SHT NO. 2
TITLE
SCHEMATIC DIAGRAM
BATTERY CHARGER
FIRST MADE FOR AMX4 RELIABILITY
LAMP
FAN
117VAC-L
110VAC
NEUTRAL
NEUTRAL
117VAC-T
117VAC-T
K-LINE1
K-LINE2
CHARGE ENABLE
I-CHARGE CMND
I-CHARGE RTN
CHARGE SCALE-SELECT
CURRENT SENSE
I-CHARGE FBK-
I-CHARGE FBK+
BAT CHARGE-
CURRENT SENSE
BATTERY
LINE
64A
LOAD
BAT CHARGE+
BAT SWT
CHARGE CURRENT
BAT-
NOTES:
1.UNLESS OTHERWISE SPECIFIED:
ALL RESISTORS ARE 0.25W, 1%
AND ARE IN OHMS
ALL CAPACITORS ARE IN MFD
CIRCUITRY CONSISTING OF R255, C256, RV257 AND RV258 ON 46-288786G2 BOARDS ONLY.
REVISIONS
PRINTS TO
1 GJO_24SEP93
PCN_179923
404
MADE BY F.PIERCE 10JUN91
ISSUED DAVE VOIGHT 20AUG91
APPROVALS J.V. 24AUG91
MEDICAL SYSTEMS DIV OR DEPT
MILWAUKEE, WI
LOCATION
46-288786-S
CONT ON SHEET 3 SHT NO. 2

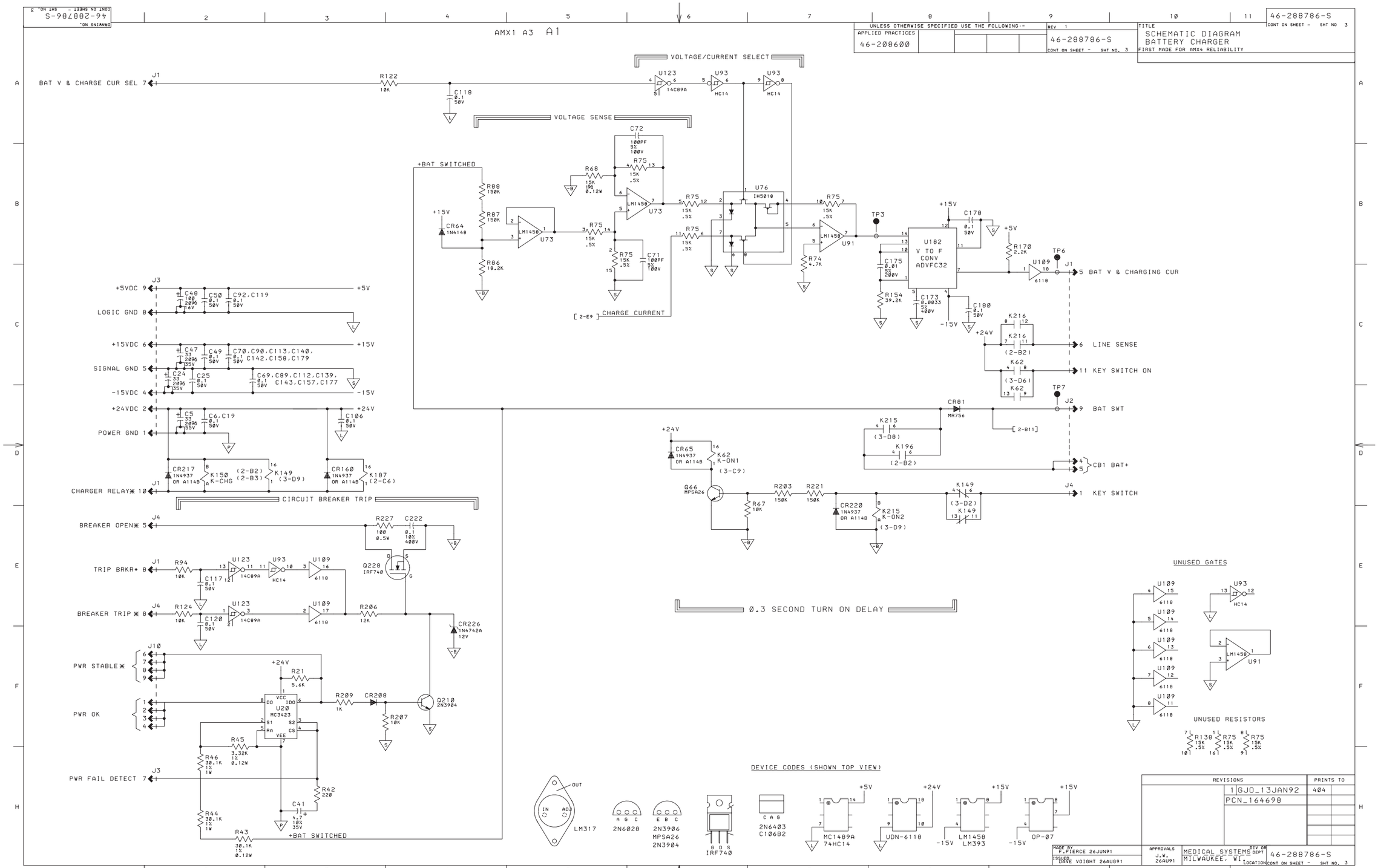
46-288786-S
AMX1 A3 A1
UNLESS OTHERWISE SPECIFIED USE THE FOLLOWING:-
APPLIED PRACTICES
46-208600
REV 1
TITLE
SCHEMATIC DIAGRAM
BATTERY CHARGER
FIRST MADE FOR AMX4 RELIABILITY
VOLTAGE/CURRENT SELECT
VOLTAGE SENSE
BAT V & CHARGE CUR SEL
CHARGE CURRENT
+BAT SWITCHED
U182
V TO F
CONV
ADVFC32
5 BAT V & CHARGING CUR
6 LINE SENSE
11 KEY SWITCH ON
9 BAT SWT
CB1 BAT+
KEY SWITCH
CIRCUIT BREAKER TRIP
CHARGER RELAY
BREAKER OPEN
TRIP BRKR+
BREAKER TRIP
PWR STABLE
PWR OK
PWR FAIL DETECT
0.3 SECOND TURN ON DELAY
UNUSED GATES
UNUSED RESISTORS
DEVICE CODES (SHOWN TOP VIEW)
LM317
2N6028
2N3906
MPSA26
2N3904
IRF740
2N6403
C106B2
MC1489A
74HC14
UDN-6118
LM1458
LM393
OP-07
REVISIONS
1 GJO_13JAN92
PCN_164698
PRINTS TO
404
MADE BY P.PIERCE 26JUN91
ISSUED DAVE VOIGHT 26AUG91
APPROVALS J.W. 26AU91
MEDICAL SYSTEMS
MILWAUKEE, WI
46-288786-S

SECTION 7
ROTOR CONTROLLER
AMX1 A3 A2
. 6(232786G2

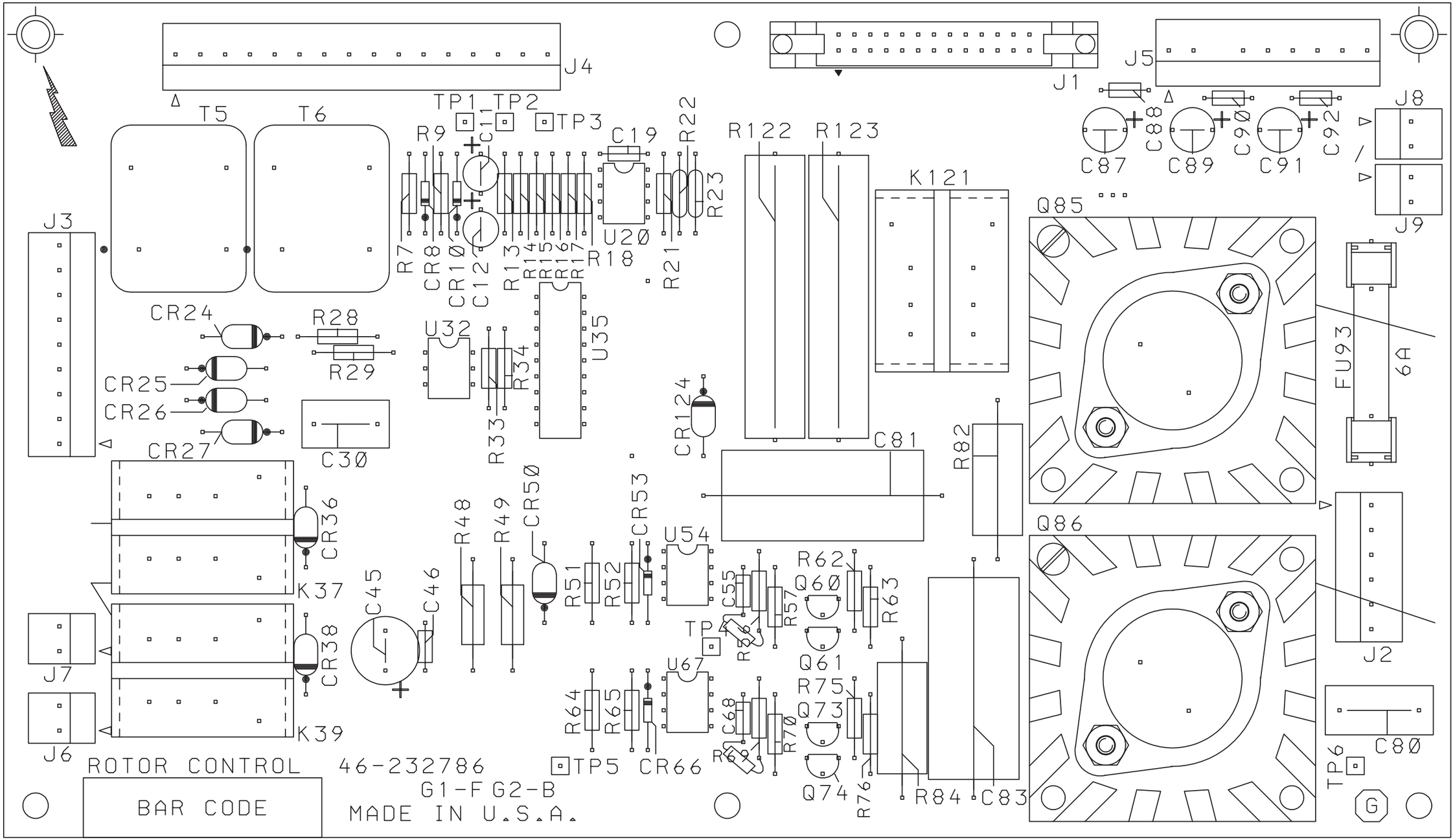

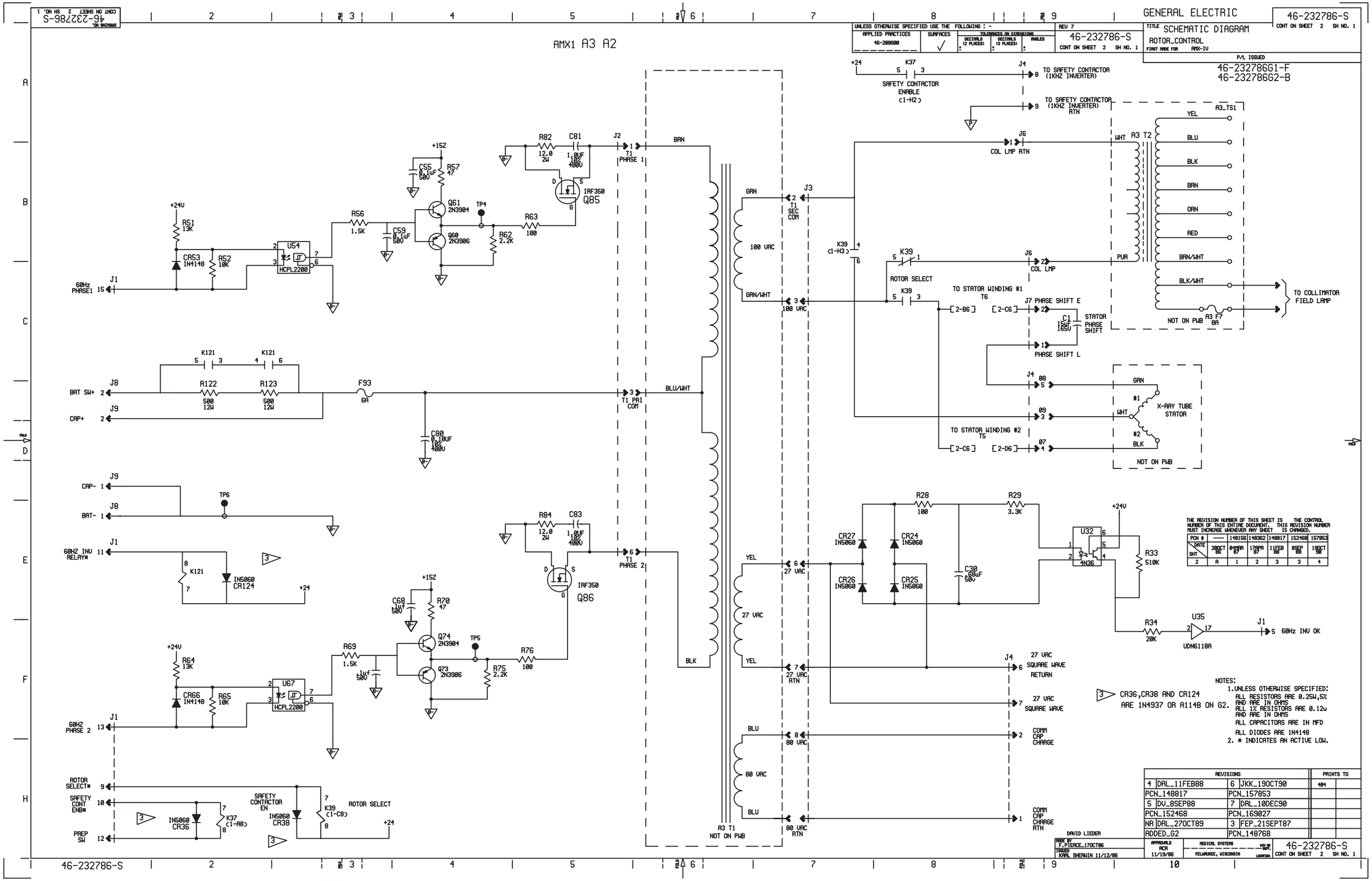
GENERAL ELECTRIC
46-232786-S
SCHEMATIC DIAGRAM
ROTOR_CONTROL
AMX1 A3 A2
TO SAFETY CONTACTOR (1KHZ INVERTER)
SAFETY CONTACTOR ENABLE (1-H2)
TO SAFETY CONTACTOR (1KHZ INVERTER) RTN
COL LMP RTN
COL LMP
ROTOR SELECT
TO STATOR WINDING #1 T6
TO STATOR WINDING #2 T5
PHASE SHIFT E
PHASE SHIFT L
STATOR PHASE SHIFT
X-RAY TUBE STATOR
NOT ON PWB
TO COLLIMATOR FIELD LAMP
60Hz PHASE1
BAT SW+
CAP+
CAP-
BAT-
60HZ INV RELAY*
60HZ PHASE 2
ROTOR SELECT*
SAFETY CONT ENB*
PREP SW
SAFETY CONTACTOR EN
ROTOR SELECT
60Hz INV OK
27 VAC SQUARE WAVE RETURN
27 VAC SQUARE WAVE
COMM CAP CHARGE
COMM CAP CHARGE RTN
A3 T1 NOT ON PWB
CR36,CR38 AND CR124 ARE 1N4937 OR A114B ON G2.
NOTES:
1.UNLESS OTHERWISE SPECIFIED:
ALL RESISTORS ARE 0.25W,5% AND ARE IN OHMS
ALL 1% RESISTORS ARE 0.12W AND ARE IN OHMS
ALL CAPACITORS ARE IN MFD
ALL DIODES ARE 1N4148
2. * INDICATES AN ACTIVE LOW.
REVISIONS
PRINTS TO
DAVID LIEDER
46-232786-S

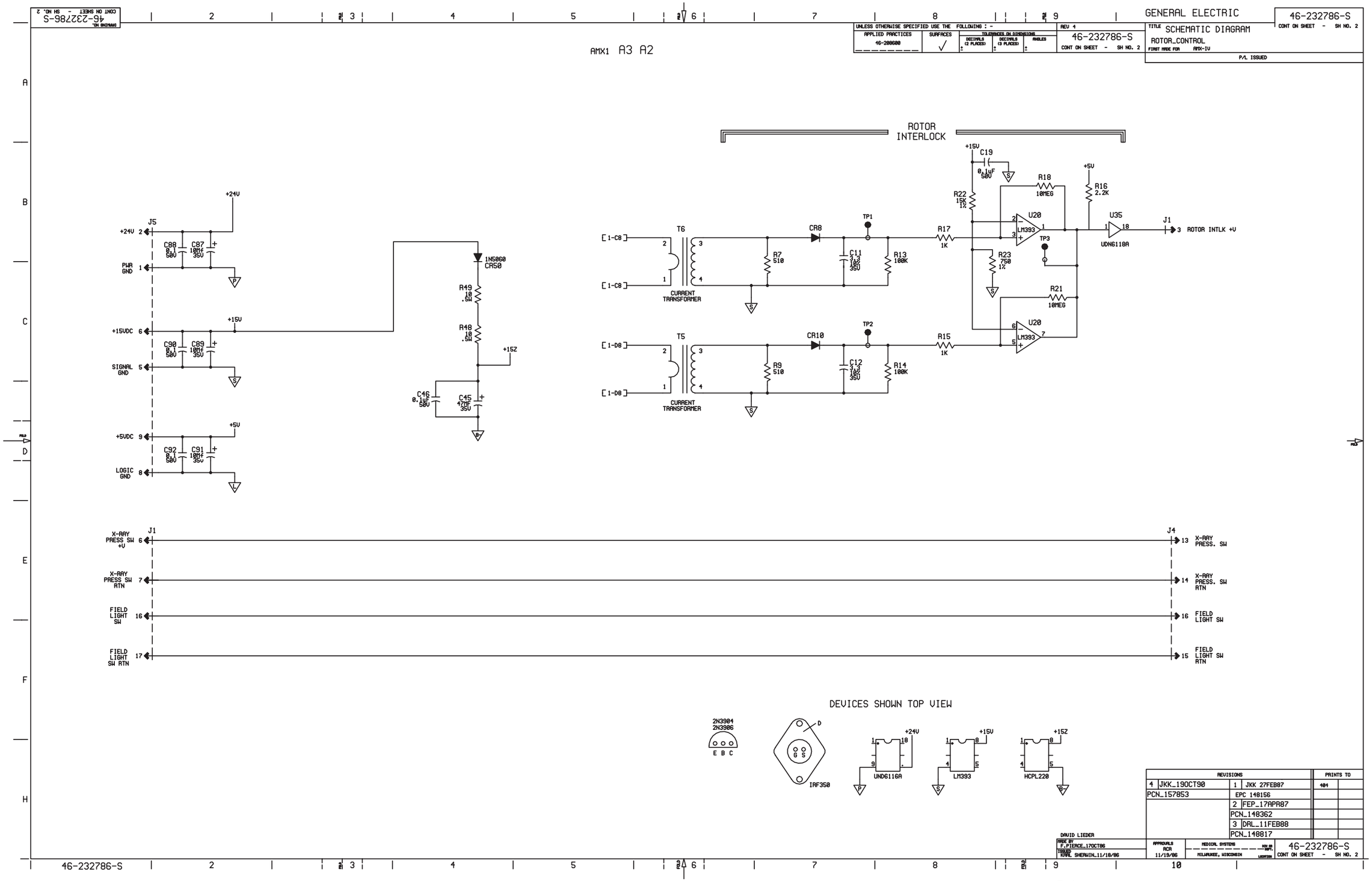
GENERAL ELECTRIC
46-232786-S
CONT ON SHEET - SH NO. 2
TITLE SCHEMATIC DIAGRAM
ROTOR_CONTROL
FIRST MADE FOR AMX-IV
P/L ISSUED
UNLESS OTHERWISE SPECIFIED USE THE FOLLOWING : -
APPLIED PRACTICES
46-200600
SURFACES
TOLERANCES ON DIMENSIONS
DECIMALS (2 PLACES)
DECIMALS (3 PLACES)
ANGLES
REV 4
46-232786-S
CONT ON SHEET - SH NO. 2
AMX1 A3 A2
ROTOR INTERLOCK
J5
+24V
PWR GND
+15VDC
SIGNAL GND
+5VDC
LOGIC GND
C88 0.1 50V
C87 10uF 35V
C90 0.1 50V
C89 10uF 35V
C92 0.1 50V
C91 10uF 35V
1N5060 CR50
R49 10 .5W
R48 10 .5W
+15Z
C46 0.1uF 50V
C45 470uF 35V
T6
T5
CURRENT TRANSFORMER
R7 510
R9 510
CR8
CR10
C11 5.3 10% 35V
C12 5.3 10% 35V
R13 100K
R14 100K
TP1
TP2
TP3
R17 1K
R15 1K
C19 0.1uF 50V
R22 15K 1%
R23 750 1%
R18 10MEG
R21 10MEG
R16 2.2K
U20
LM393
U35
UDN6118A
J1
ROTOR INTLK +V
X-RAY PRESS SW +V
X-RAY PRESS SW RTN
FIELD LIGHT SW
FIELD LIGHT SW RTN
J4
X-RAY PRESS. SW
X-RAY PRESS. SW RTN
FIELD LIGHT SW
FIELD LIGHT SW RTN
DEVICES SHOWN TOP VIEW
2N3904
2N3906
E B C
IRF350
UNDG116A
LM393
HCPL220
REVISIONS
PRINTS TO
4 JKK_19OCT90
PCN_157853
1 JKK 27FEB87
EPC 148156
2 FEP_17APR87
PCN_148362
3 DRL_11FEB88
PCN_148817
DAVID LIEDER
MADE BY F.PIERCE_17OCT86
ISSUED KARL SHERWIN_11/10/86
APPROVALS RCR 11/19/86
MEDICAL SYSTEMS
MILWAUKEE, WISCONSIN
46-232786-S
CONT ON SHEET - SH NO. 2

SECTION 8
1KHZ INVERTER
AMX1 A4 A1
46(288764G1

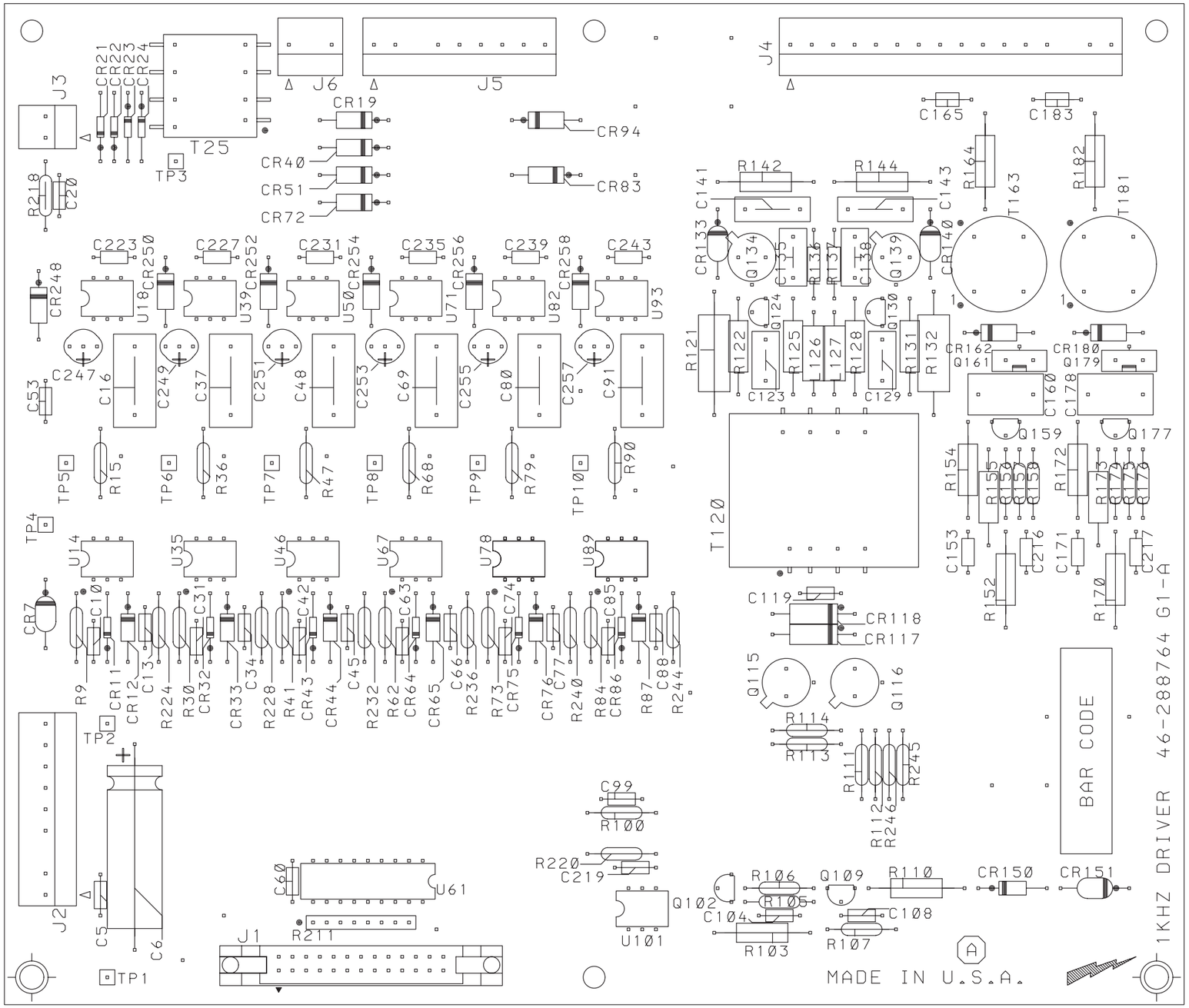

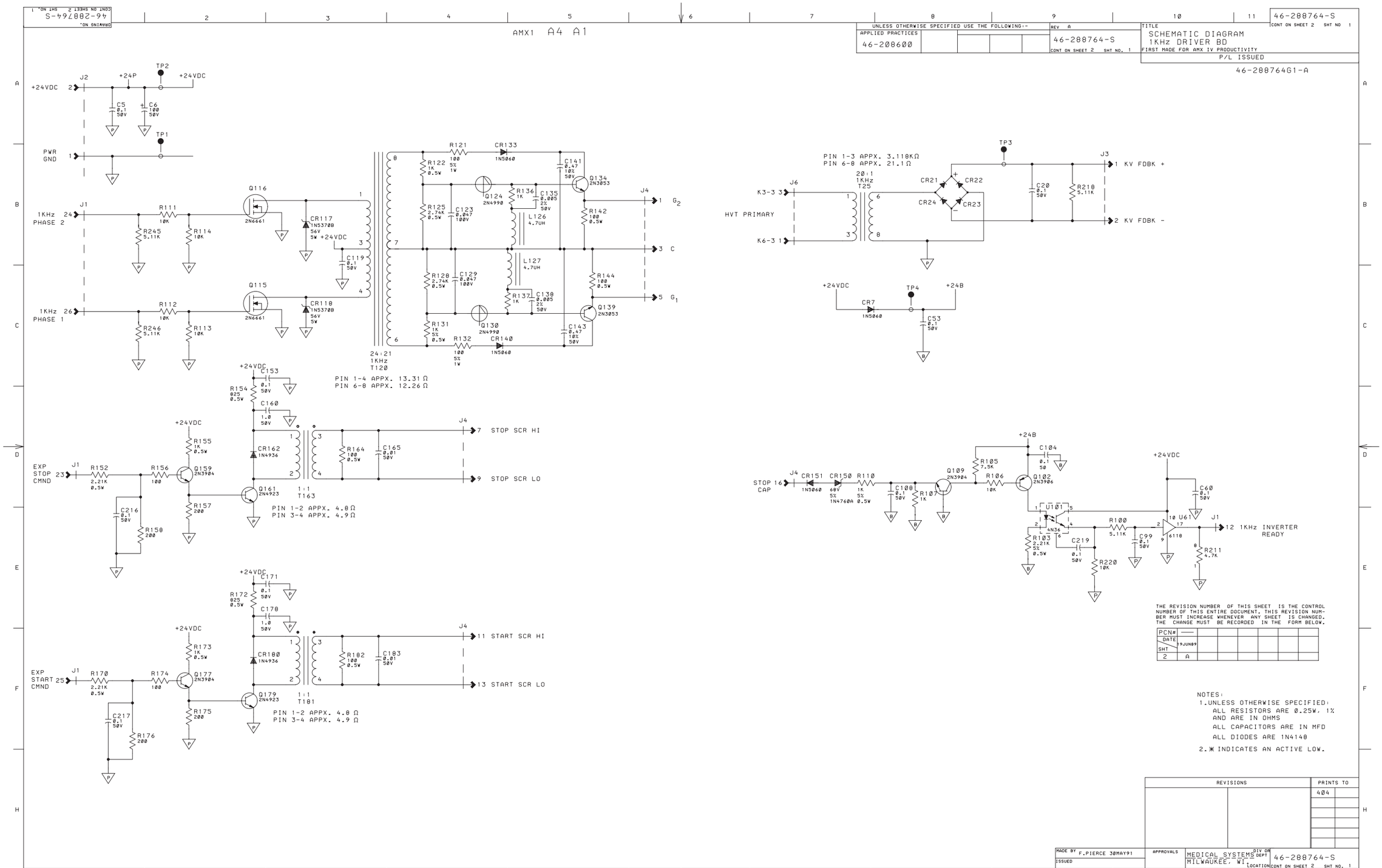
46-288764-S
AMX1 A4 A1
UNLESS OTHERWISE SPECIFIED USE THE FOLLOWING:-
APPLIED PRACTICES
46-208600
REV A
46-288764-S
TITLE
SCHEMATIC DIAGRAM
1KHz DRIVER BD
FIRST MADE FOR AMX IV PRODUCTIVITY
P/L ISSUED
46-288764G1-A
+24VDC
J2
+24P
TP2
C5 0.1 50V
C6 100 50V
TP1
PWR GND
1KHz PHASE 2
J1
R111 10K
R245 5.11K
R114 10K
Q116 2N6661
CR117 1N5370B 56V 5W
+24VDC
C119 0.1 50V
1KHz PHASE 1
R112 10K
R246 5.11K
R113 10K
Q115 2N6661
CR118 1N5370B 56V 5W
R121 100 5% 1W
CR133 1N5060
R122 1K 0.5W
Q124 2N4990
R136 1K
C135 0.005 2% 50V
C141 0.47 10% 50V
Q134 2N3053
R125 2.74K 0.5W
C123 0.047 100V
L126 4.7UH
R142 100 0.5W
L127 4.7UH
R128 2.74K 0.5W
C129 0.047 100V
R137 1K
C138 0.005 2% 50V
R144 100 0.5W
Q139 2N3053
R131 1K 5% 0.5W
Q130 2N4990
C143 0.47 10% 50V
R132 100 5% 1W
CR140 1N5060
24:21 1KHz T120
PIN 1-4 APPX. 13.31 Ω
PIN 6-8 APPX. 12.26 Ω
J4
1 G2
3 C
5 G1
PIN 1-3 APPX. 3.118KΩ
PIN 6-8 APPX. 21.1Ω
20:1 1KHz T25
HVT PRIMARY
K3-3
K6-3
J6
TP3
J3
CR21
CR22
CR23
CR24
C20 0.1 50V
R218 5.11K
1 KV FDBK +
2 KV FDBK -
+24VDC
CR7 1N5060
TP4
+24B
C53 0.1 50V
+24VDC
C153 0.1 50V
R154 825 0.5W
C160 1.0 50V
R155 1K 0.5W
CR162 1N4936
R164 100 0.5W
C165 0.01 50V
EXP STOP CMND
J1
R152 2.21K 0.5W
R156 100
Q159 2N3904
R157 200
C216 0.1 50V
R158 200
Q161 2N4923
1:1 T163
PIN 1-2 APPX. 4.8 Ω
PIN 3-4 APPX. 4.9 Ω
7 STOP SCR HI
9 STOP SCR LO
+24VDC
C171 0.1 50V
R172 825 0.5W
C178 1.0 50V
R173 1K 0.5W
CR180 1N4936
R182 100 0.5W
C183 0.01 50V
EXP START CMND
J1
R170 2.21K 0.5W
R174 100
Q177 2N3904
R175 200
C217 0.1 50V
R176 200
Q179 2N4923
1:1 T181
PIN 1-2 APPX. 4.8 Ω
PIN 3-4 APPX. 4.9 Ω
11 START SCR HI
13 START SCR LO
STOP CAP
J4
CR151 1N5060
CR150 68V 5% 1N4760A
R110 1K 5% 0.5W
C108 0.1 50V
R107 1K
Q109 2N3904
R105 7.5K
R106 10K
+24B
C104 0.1 50
Q102 2N3906
U101 4N34
R103 2.21K 5% 0.5W
C219 0.1 50V
R220 10K
R100 5.11K
C99 0.1 50V
+24VDC
C60 0.1 50V
U61 6118
J1
12 1KHz INVERTER READY
R211 4.7K
THE REVISION NUMBER OF THIS SHEET IS THE CONTROL NUMBER OF THIS ENTIRE DOCUMENT. THIS REVISION NUMBER MUST INCREASE WHENEVER ANY SHEET IS CHANGED. THE CHANGE MUST BE RECORDED IN THE FORM BELOW.
PCN# —
DATE 19JUN89
SHT 2 A
NOTES:
1.UNLESS OTHERWISE SPECIFIED:
ALL RESISTORS ARE 0.25W, 1%
AND ARE IN OHMS
ALL CAPACITORS ARE IN MFD
ALL DIODES ARE 1N4148
2.* INDICATES AN ACTIVE LOW.
REVISIONS
PRINTS TO
404
MADE BY F.PIERCE 30MAY91
ISSUED
APPROVALS
MEDICAL SYSTEMS
MILWAUKEE, WI
46-288764-S

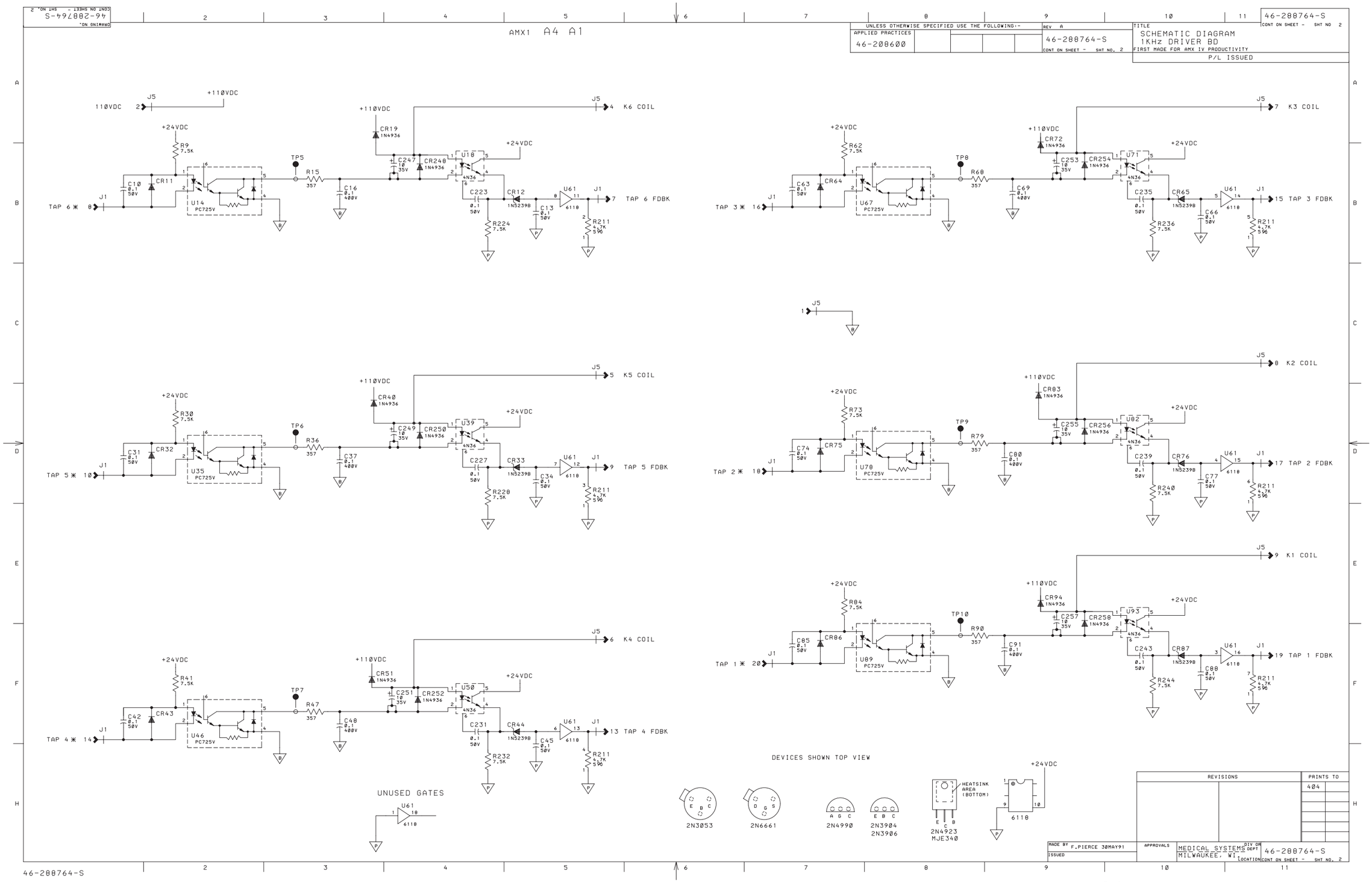
46-288764-S
CONT ON SHEET - SHT NO. 2
AMX1 A4 A1
UNLESS OTHERWISE SPECIFIED USE THE FOLLOWING:-
APPLIED PRACTICES
46-208600
REV A
46-288764-S
CONT ON SHEET - SHT NO. 2
TITLE
SCHEMATIC DIAGRAM
1KHz DRIVER BD
FIRST MADE FOR AMX IV PRODUCTIVITY
P/L ISSUED
110VDC
+110VDC
+24VDC
TAP 6 ✱
TAP 3 ✱
TAP 5 ✱
TAP 2 ✱
TAP 4 ✱
TAP 1 ✱
K6 COIL
K3 COIL
K5 COIL
K2 COIL
K4 COIL
K1 COIL
TAP 6 FDBK
TAP 3 FDBK
TAP 5 FDBK
TAP 2 FDBK
TAP 4 FDBK
TAP 1 FDBK
U14 PC725V
U67 PC725V
U35 PC725V
U78 PC725V
U46 PC725V
U89 PC725V
U18 4N36
U71 4N36
U39 4N36
U82 4N36
U50 4N36
U93 4N36
U61 6118
UNUSED GATES
DEVICES SHOWN TOP VIEW
2N3053
2N6661
2N4990
2N3904
2N3906
2N4923
MJE340
HEATSINK AREA (BOTTOM)
MADE BY F.PIERCE 30MAY91
ISSUED
APPROVALS
MEDICAL SYSTEMS
MILWAUKEE, WI
46-288764-S
REVISIONS
PRINTS TO
404

SECTION 9
KVP/FIL CONTROL
AMX, A. A−
. 6(−6. 986G,

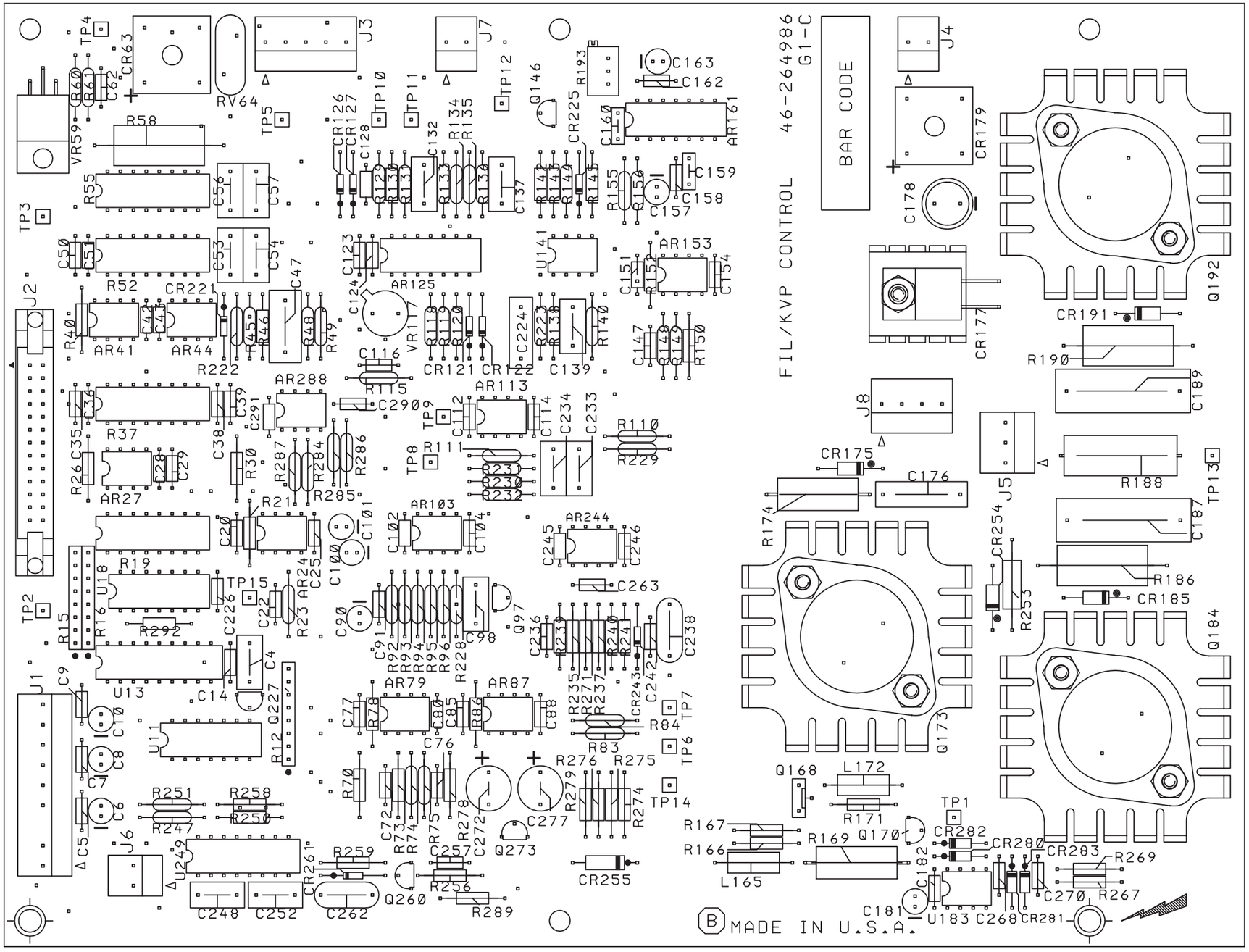

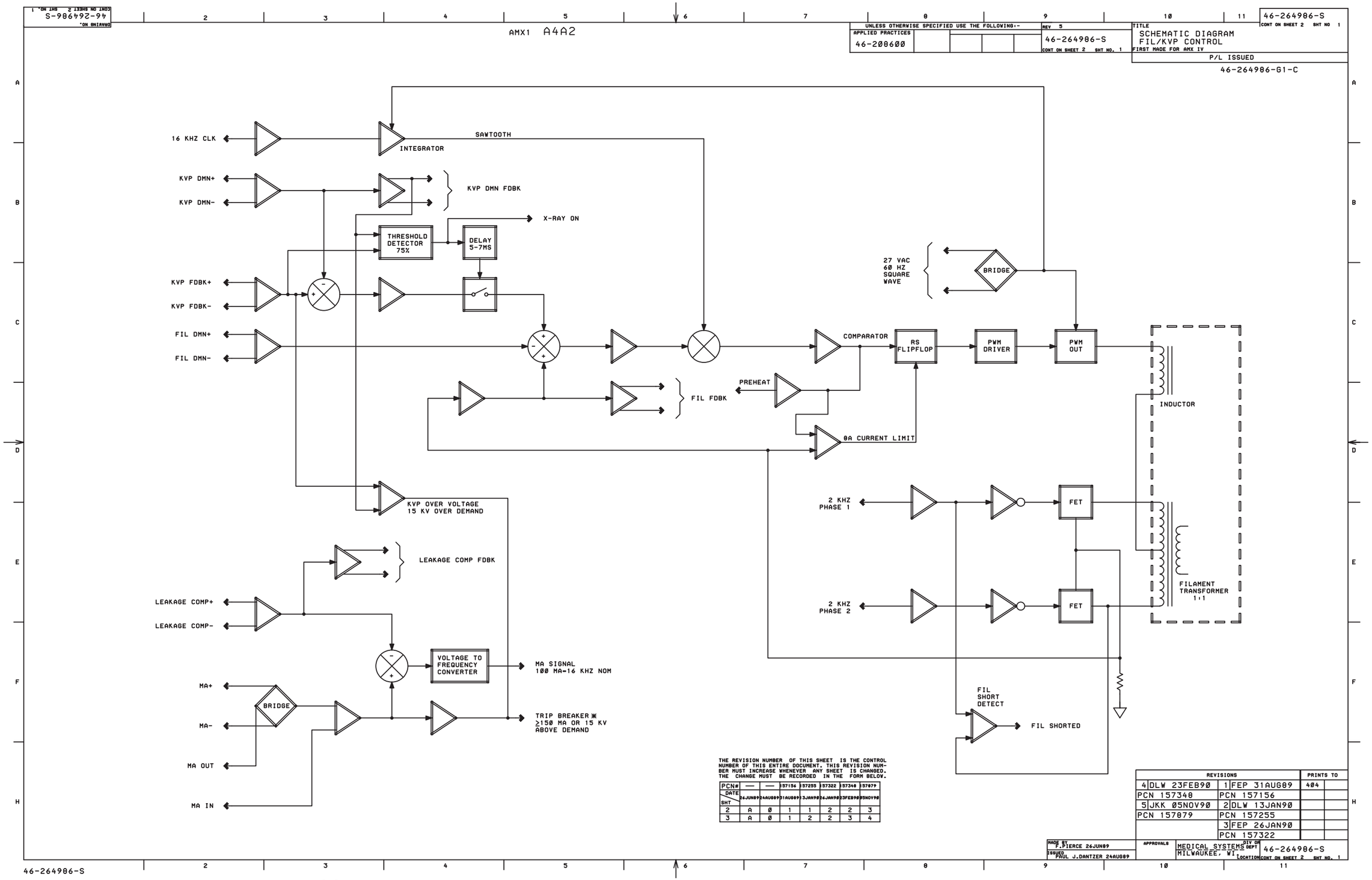
46-264986-S
CONT ON SHEET 2 SHT NO 1
AMX1 A4A2
UNLESS OTHERWISE SPECIFIED USE THE FOLLOWING:-
APPLIED PRACTICES
46-208600
REV 5
46-264986-S
CONT ON SHEET 2 SHT NO. 1
TITLE
SCHEMATIC DIAGRAM
FIL/KVP CONTROL
FIRST MADE FOR AMX IV
P/L ISSUED
46-264986-G1-C
16 KHZ CLK
INTEGRATOR
SAWTOOTH
KVP DMN+
KVP DMN-
KVP DMN FDBK
X-RAY ON
THRESHOLD DETECTOR 75%
DELAY 5-7MS
KVP FDBK+
KVP FDBK-
FIL DMN+
FIL DMN-
27 VAC 60 HZ SQUARE WAVE
BRIDGE
COMPARATOR
RS FLIPFLOP
PWM DRIVER
PWM OUT
INDUCTOR
PREHEAT
FIL FDBK
8A CURRENT LIMIT
KVP OVER VOLTAGE 15 KV OVER DEMAND
2 KHZ PHASE 1
2 KHZ PHASE 2
FET
FET
FILAMENT TRANSFORMER 1:1
LEAKAGE COMP FDBK
LEAKAGE COMP+
LEAKAGE COMP-
VOLTAGE TO FREQUENCY CONVERTER
MA SIGNAL 100 MA-16 KHZ NOM
MA+
MA-
BRIDGE
MA OUT
MA IN
TRIP BREAKER ≥150 MA OR 15 KV ABOVE DEMAND
FIL SHORT DETECT
FIL SHORTED
THE REVISION NUMBER OF THIS SHEET IS THE CONTROL NUMBER OF THIS ENTIRE DOCUMENT. THIS REVISION NUMBER MUST INCREASE WHENEVER ANY SHEET IS CHANGED. THE CHANGE MUST BE RECORDED IN THE FORM BELOW.
PCN# — — 157156 157255 157322 157348 157879
DATE 26JUN89 24AUG89 31AUG89 13JAN90 26JAN90 23FEB90 05NOV90
SHT
2 A 0 1 1 2 2 3
3 A 0 1 2 2 3 4
REVISIONS
4 DLW 23FEB90
1 FEP 31AUG89
PRINTS TO 404
PCN 157348
PCN 157156
5 JKK 05NOV90
2 DLW 13JAN90
PCN 157879
PCN 157255
3 FEP 26JAN90
PCN 157322
MADE BY F.PIERCE 26JUN89
ISSUED PAUL J.DANTZER 24AUG89
APPROVALS
MEDICAL SYSTEMS
MILWAUKEE, WI
DIV OR DEPT
LOCATION
46-264986-S
CONT ON SHEET 2 SHT NO. 1
46-264986-S

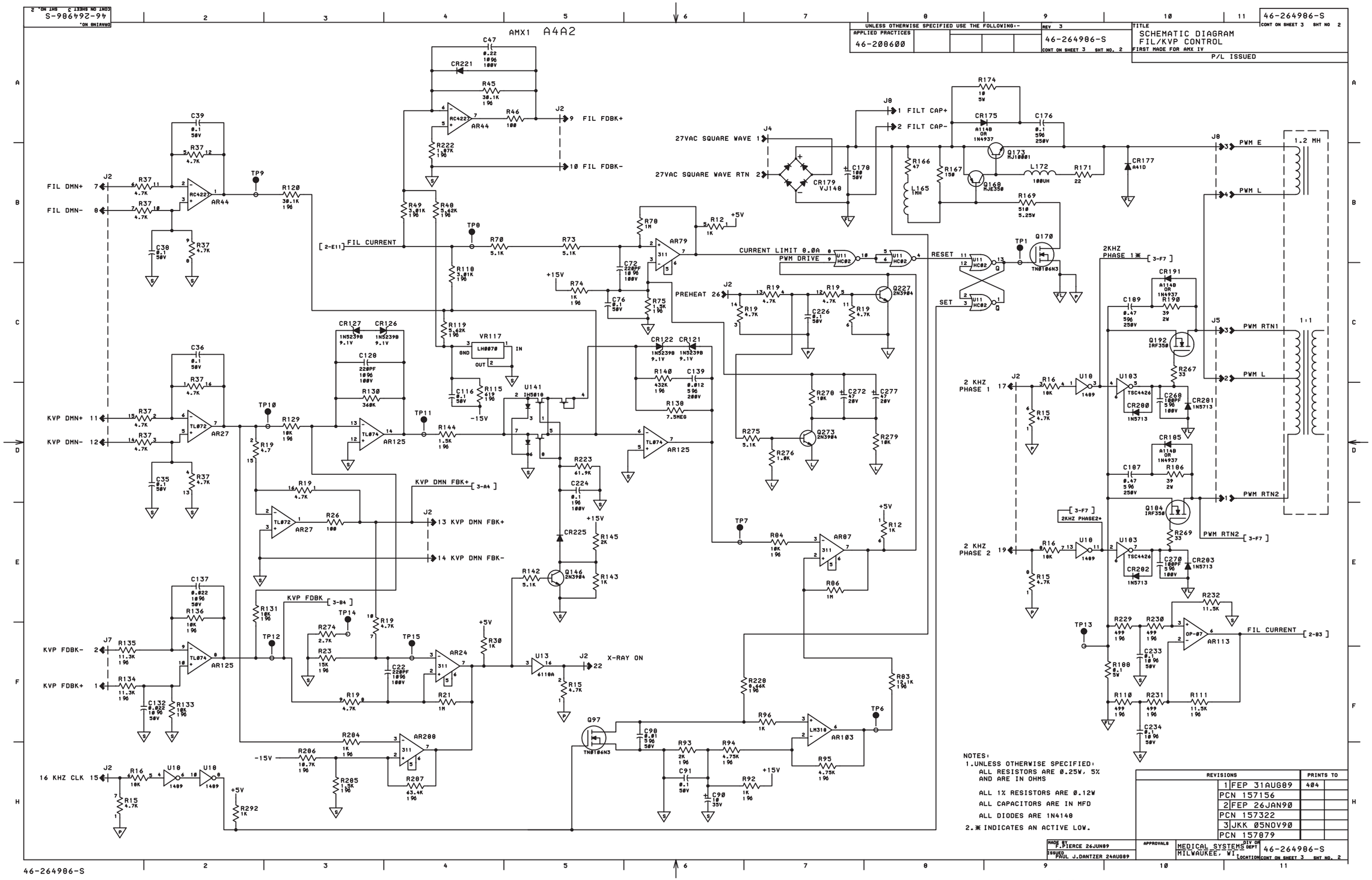
AMX1 A4A2
UNLESS OTHERWISE SPECIFIED USE THE FOLLOWING:-
APPLIED PRACTICES
46-208600
46-264986-S
CONT ON SHEET 3 SHT NO. 2
TITLE
SCHEMATIC DIAGRAM
FIL/KVP CONTROL
FIRST MADE FOR AMX IV
P/L ISSUED
FIL DMN+
FIL DMN-
KVP DMN+
KVP DMN-
KVP FDBK-
KVP FDBK+
16 KHZ CLK
FIL CURRENT
KVP DMN FBK+
KVP FDBK
FIL FDBK+
FIL FDBK-
KVP DMN FBK-
X-RAY ON
27VAC SQUARE WAVE 1
27VAC SQUARE WAVE RTN 2
FILT CAP+
FILT CAP-
CURRENT LIMIT 8.0A
PWM DRIVE
PREHEAT
RESET
SET
2KHZ PHASE 1
2 KHZ PHASE 1
2 KHZ PHASE 2
PWM E
PWM L
PWM RTN1
PWM RTN2
1.2 MH
1:1
NOTES:
1.UNLESS OTHERWISE SPECIFIED:
ALL RESISTORS ARE 0.25W, 5%
AND ARE IN OHMS
ALL 1% RESISTORS ARE 0.12W
ALL CAPACITORS ARE IN MFD
ALL DIODES ARE 1N4148
2.* INDICATES AN ACTIVE LOW.
REVISIONS
PRINTS TO
1 FEP 31AUG89 404
PCN 157156
2 FEP 26JAN90
PCN 157322
3 JKK 05NOV90
PCN 157879
MADE BY F.PIERCE 26JUN89
ISSUED PAUL J.DANTZER 24AUG89
APPROVALS
MEDICAL SYSTEMS DIV OR DEPT
MILWAUKEE, WI LOCATION
46-264986-S

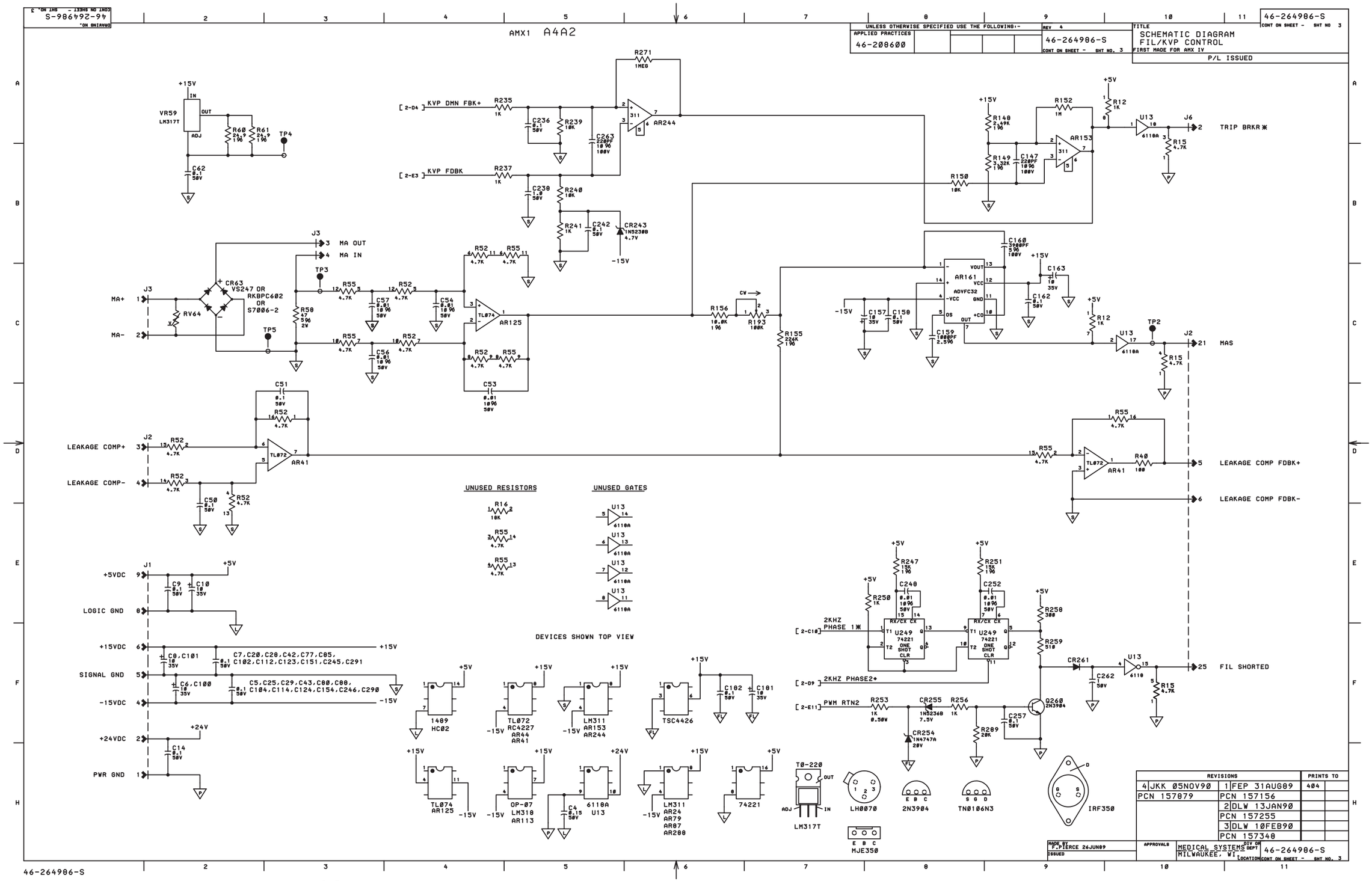
46-264986-S
CONT ON SHEET - SHT NO. 3
AMX1 A4A2
UNLESS OTHERWISE SPECIFIED USE THE FOLLOWING:-
APPLIED PRACTICES
46-208600
REV 4
46-264986-S
TITLE
SCHEMATIC DIAGRAM
FIL/KVP CONTROL
FIRST MADE FOR AMX IV
P/L ISSUED
KVP DMN FBK+
KVP FDBK
TRIP BRKR
MA OUT
MA IN
MA+
MA-
MAS
LEAKAGE COMP+
LEAKAGE COMP-
LEAKAGE COMP FDBK+
LEAKAGE COMP FDBK-
FIL SHORTED
+5VDC
LOGIC GND
+15VDC
SIGNAL GND
-15VDC
+24VDC
PWR GND
2KHZ PHASE 1
2KHZ PHASE2
PWM RTN2
UNUSED RESISTORS
UNUSED GATES
DEVICES SHOWN TOP VIEW
REVISIONS
PRINTS TO
4 JKK 05NOV90
PCN 157879
1 FEP 31AUG89
PCN 157156
2 DLW 13JAN90
PCN 157255
3 DLW 10FEB90
PCN 157348
404
MADE BY F.PIERCE 26JUN89
ISSUED
APPROVALS
MEDICAL SYSTEMS DIV OR DEPT
MILWAUKEE, WI LOCATION
46-264986-S
CONT ON SHEET - SHT NO. 3

SECTION ,)
CAPACITOR BOARD
AMX, A4 A3
46(−885) 4G,

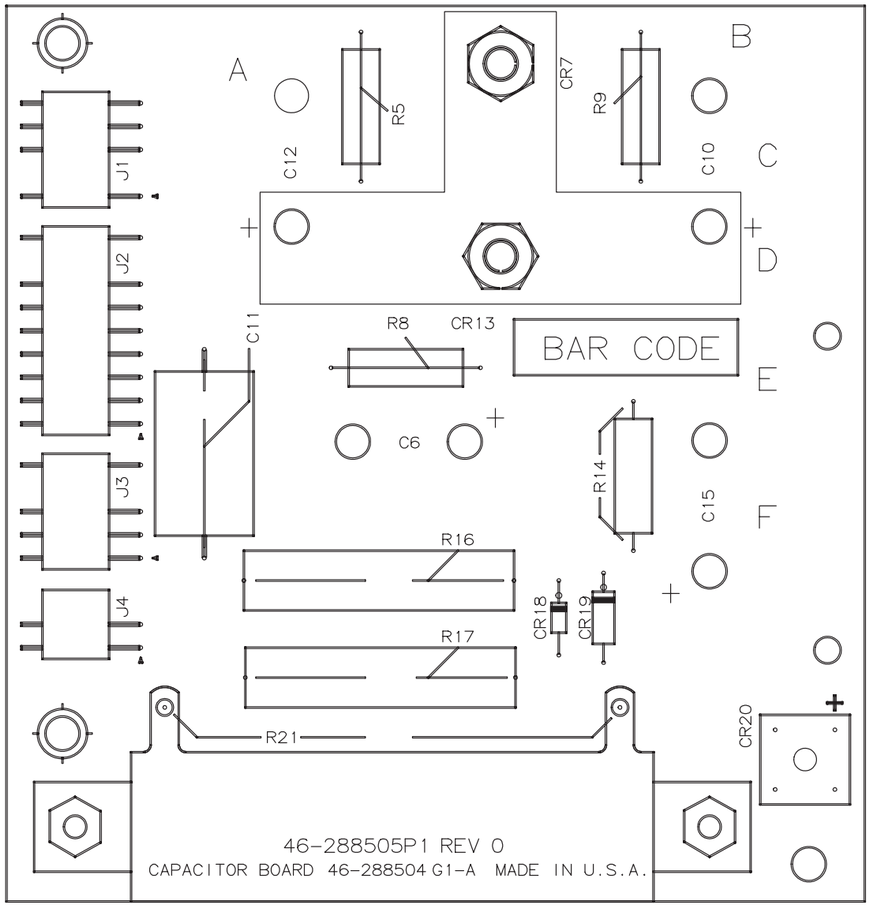

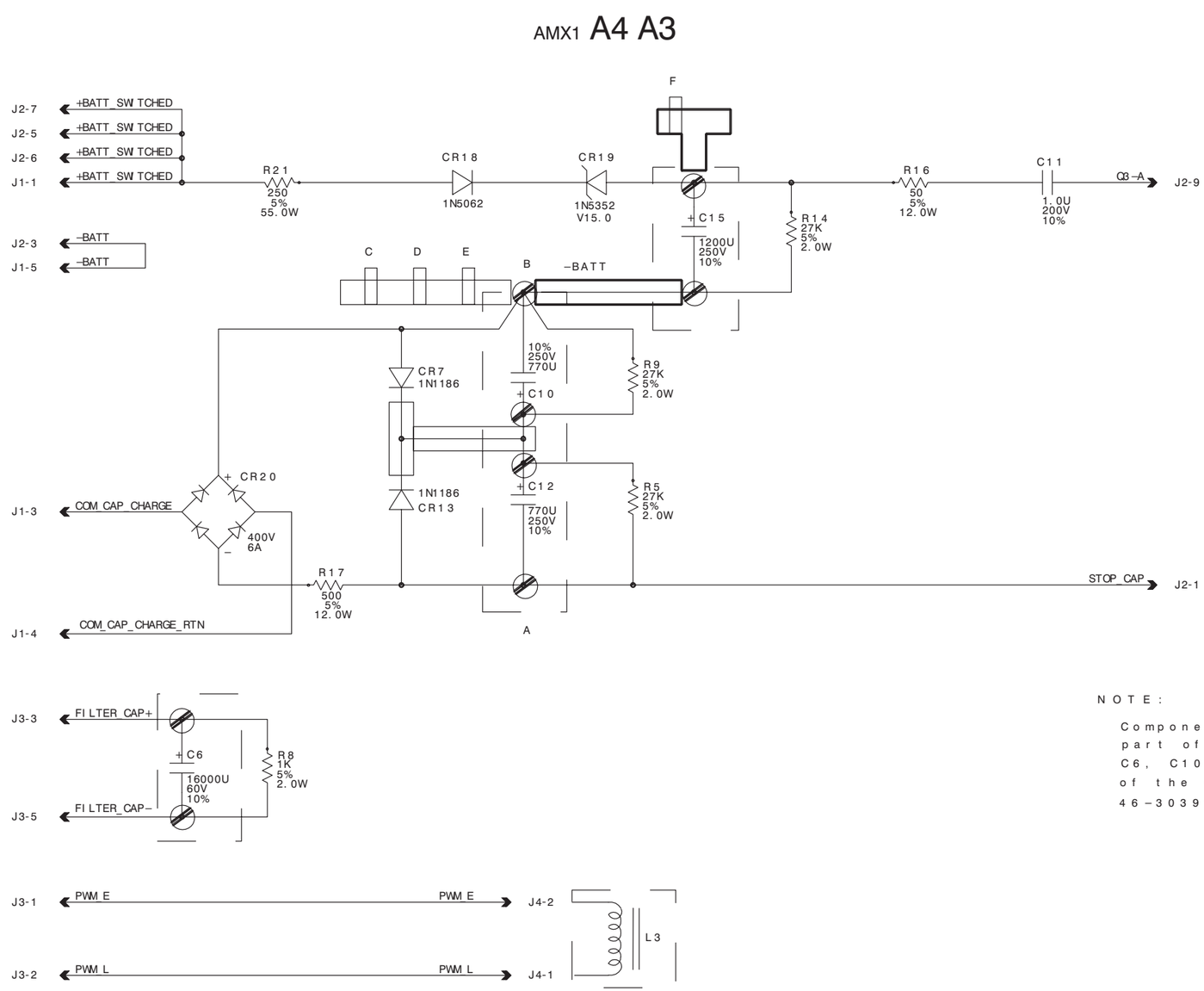

NOTE:

Components in dashed areas, are not part of this board assembly. C6, C10, C12, C15, L3 are part of the Capacitor module assembly 46−303913G1.

BLOCK PATHNAME	/user/amx_4/cap_bd SHEET 1 OF −				
REV A	CAPACITOR_BOARD	LOCATION CODE	APPROVALS	GE MEDICAL SYSTEMS	REVISIONS
DRAWING NO. 46−288504−S	FIRST MADE FOR AMX_IV_PRODUCTIVITY	AMX1−A4−A3		MILWAUKEE WI	
SHT. NO. 1 CONT. ON SHT. NO. −	MADE BY CINDY_DREW CZ DATE 25−FEB−91	ISSUED DATE	PRINTS TO 404		

SECTION 11
DRIVE CONTROLLER
AMX1 A0 A1
. 1(23283. G1

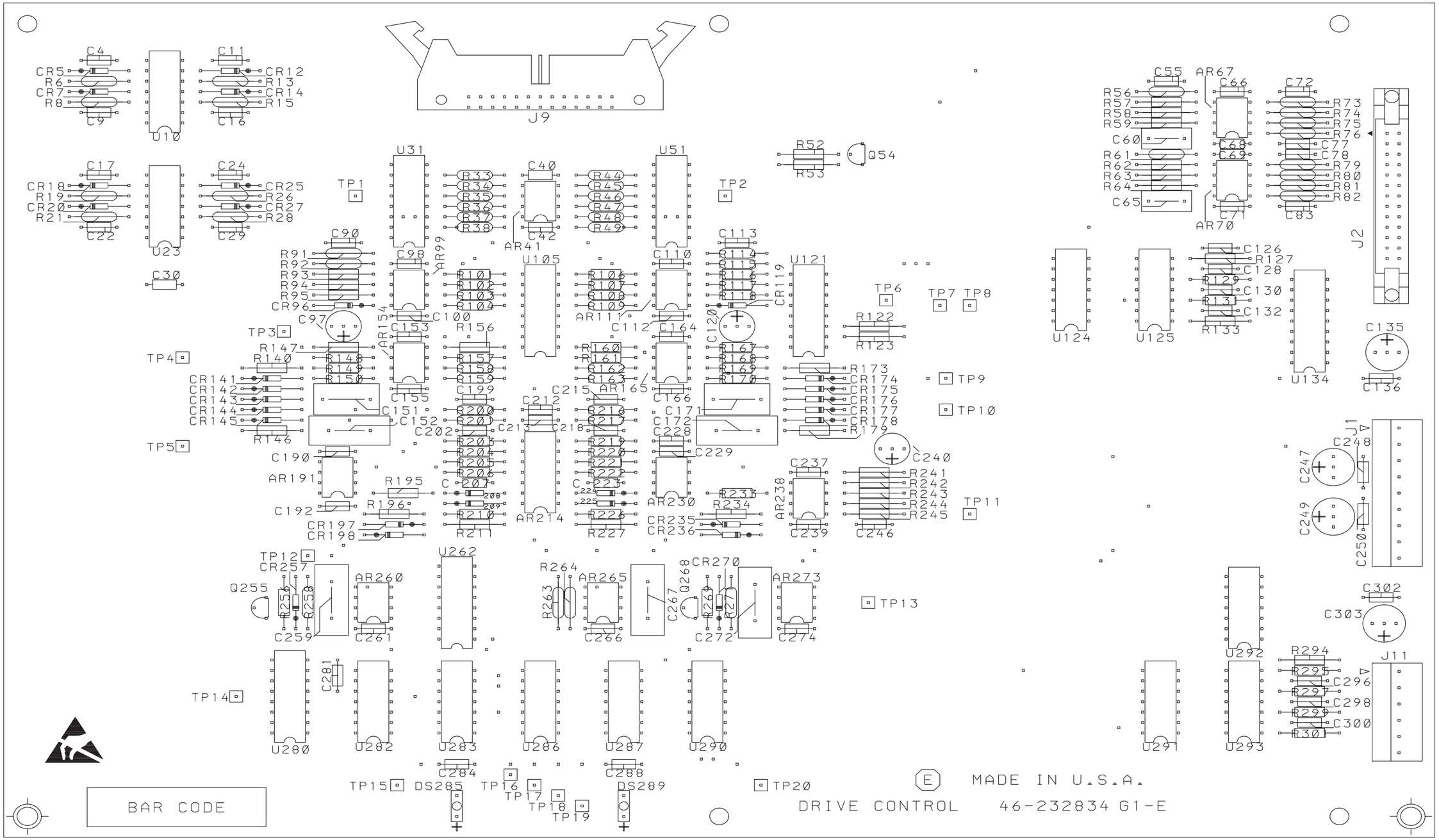

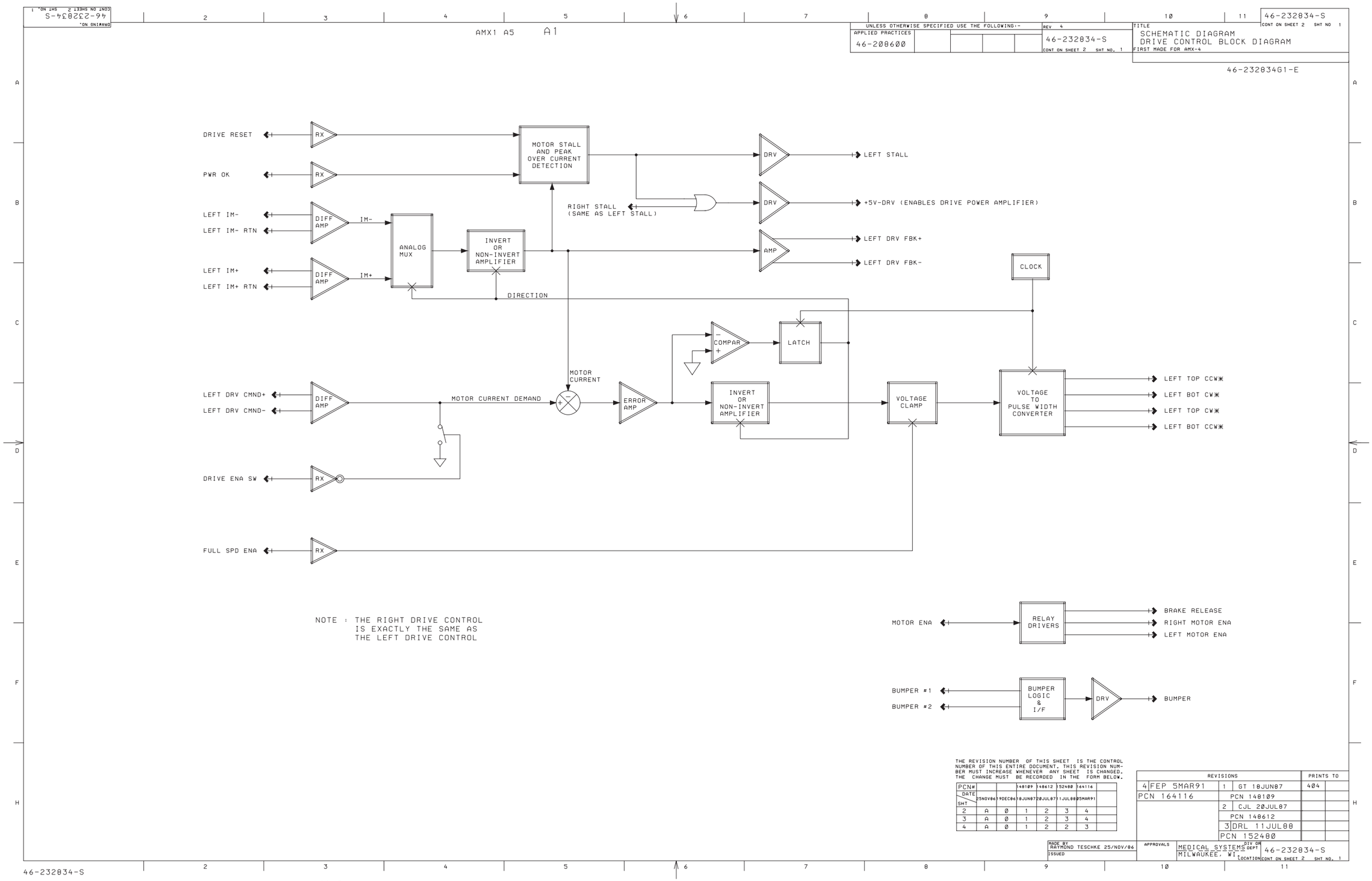
46-232834-S
CONT ON SHEET 2 SHT NO. 1
DRAWING NO.
AMX1 A5 A1
UNLESS OTHERWISE SPECIFIED USE THE FOLLOWING:-
APPLIED PRACTICES
46-208600
REV 4
46-232834-S
CONT ON SHEET 2 SHT NO. 1
TITLE
SCHEMATIC DIAGRAM
DRIVE CONTROL BLOCK DIAGRAM
FIRST MADE FOR AMX-4
46-232834G1-E
DRIVE RESET
PWR OK
LEFT IM-
LEFT IM- RTN
LEFT IM+
LEFT IM+ RTN
LEFT DRV CMND+
LEFT DRV CMND-
DRIVE ENA SW
FULL SPD ENA
RX
DIFF AMP
IM-
IM+
ANALOG MUX
INVERT OR NON-INVERT AMPLIFIER
MOTOR STALL AND PEAK OVER CURRENT DETECTION
RIGHT STALL (SAME AS LEFT STALL)
DIRECTION
MOTOR CURRENT
MOTOR CURRENT DEMAND
ERROR AMP
COMPAR
LATCH
DRV
AMP
LEFT STALL
+5V-DRV (ENABLES DRIVE POWER AMPLIFIER)
LEFT DRV FBK+
LEFT DRV FBK-
CLOCK
VOLTAGE CLAMP
VOLTAGE TO PULSE WIDTH CONVERTER
LEFT TOP CCW*
LEFT BOT CW*
LEFT TOP CW*
LEFT BOT CCW*
NOTE : THE RIGHT DRIVE CONTROL IS EXACTLY THE SAME AS THE LEFT DRIVE CONTROL
MOTOR ENA
RELAY DRIVERS
BRAKE RELEASE
RIGHT MOTOR ENA
LEFT MOTOR ENA
BUMPER #1
BUMPER #2
BUMPER LOGIC & I/F
BUMPER
THE REVISION NUMBER OF THIS SHEET IS THE CONTROL NUMBER OF THIS ENTIRE DOCUMENT. THIS REVISION NUMBER MUST INCREASE WHENEVER ANY SHEET IS CHANGED. THE CHANGE MUST BE RECORDED IN THE FORM BELOW.
PCN# 148109 148612 152480 164116
DATE 25NOV86 19DEC86 18JUN87 20JUL87 11JUL88 05MAR91
SHT
2 A 0 1 2 3 4
3 A 0 1 2 3 4
4 A 0 1 2 2 3
REVISIONS
4 FEP 5MAR91
PCN 164116
1 GT 18JUN87
PCN 148109
2 CJL 20JUL87
PCN 148612
3 DRL 11JUL88
PCN 152480
PRINTS TO
404
MADE BY RAYMOND TESCHKE 25/NOV/86
ISSUED
APPROVALS
MEDICAL SYSTEMS DIV OR DEPT
MILWAUKEE, WI LOCATION
46-232834-S
CONT ON SHEET 2 SHT NO. 1
46-232834-S

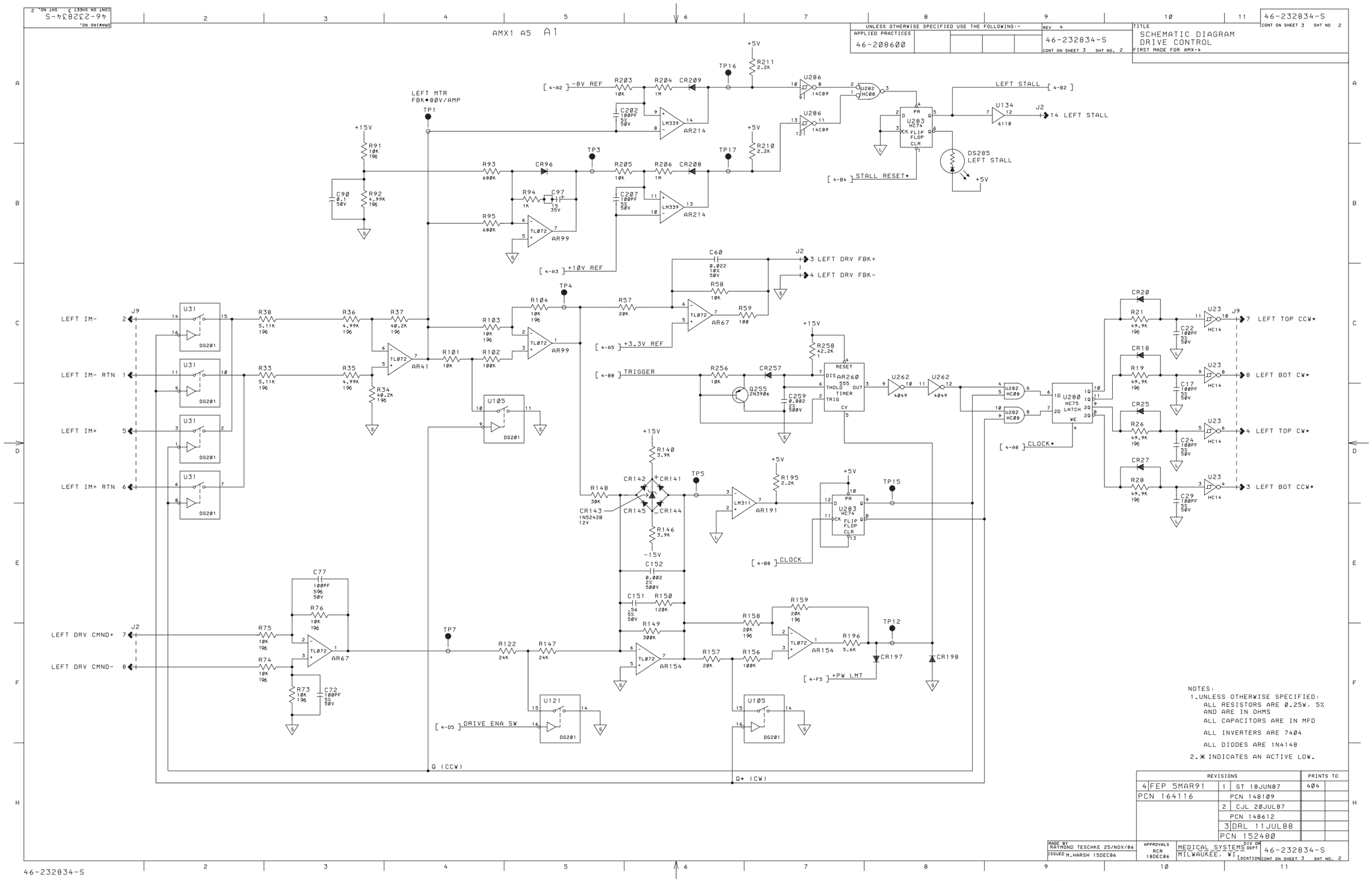
AMX1 A5 A1
UNLESS OTHERWISE SPECIFIED USE THE FOLLOWING:-
APPLIED PRACTICES
46-208600
46-232834-S
TITLE
SCHEMATIC DIAGRAM
DRIVE CONTROL
FIRST MADE FOR AMX-4
LEFT MTR FBK•80V/AMP
LEFT STALL
STALL RESET•
LEFT DRV FBK+
LEFT DRV FBK-
LEFT IM-
LEFT IM- RTN
LEFT IM+
LEFT IM+ RTN
LEFT DRV CMND+
LEFT DRV CMND-
TRIGGER
CLOCK•
CLOCK
DRIVE ENA SW
+PW LMT
LEFT TOP CCW•
LEFT BOT CW•
LEFT TOP CW•
LEFT BOT CCW•
Q (CCW)
Q• (CW)
NOTES:
1.UNLESS OTHERWISE SPECIFIED:
ALL RESISTORS ARE 0.25W, 5%
AND ARE IN OHMS
ALL CAPACITORS ARE IN MFD
ALL INVERTERS ARE 7404
ALL DIODES ARE 1N4148
2.* INDICATES AN ACTIVE LOW.
REVISIONS
PRINTS TO
4 FEP 5MAR91
PCN 164116
1 GT 18JUN87
PCN 148109
2 CJL 20JUL87
PCN 148612
3 DRL 11JUL88
PCN 152480
404
MADE BY RAYMOND TESCHKE 25/NOV/86
ISSUED M.HARSH 15DEC86
APPROVALS RCR 18DEC86
MEDICAL SYSTEMS
MILWAUKEE, WI
46-232834-S

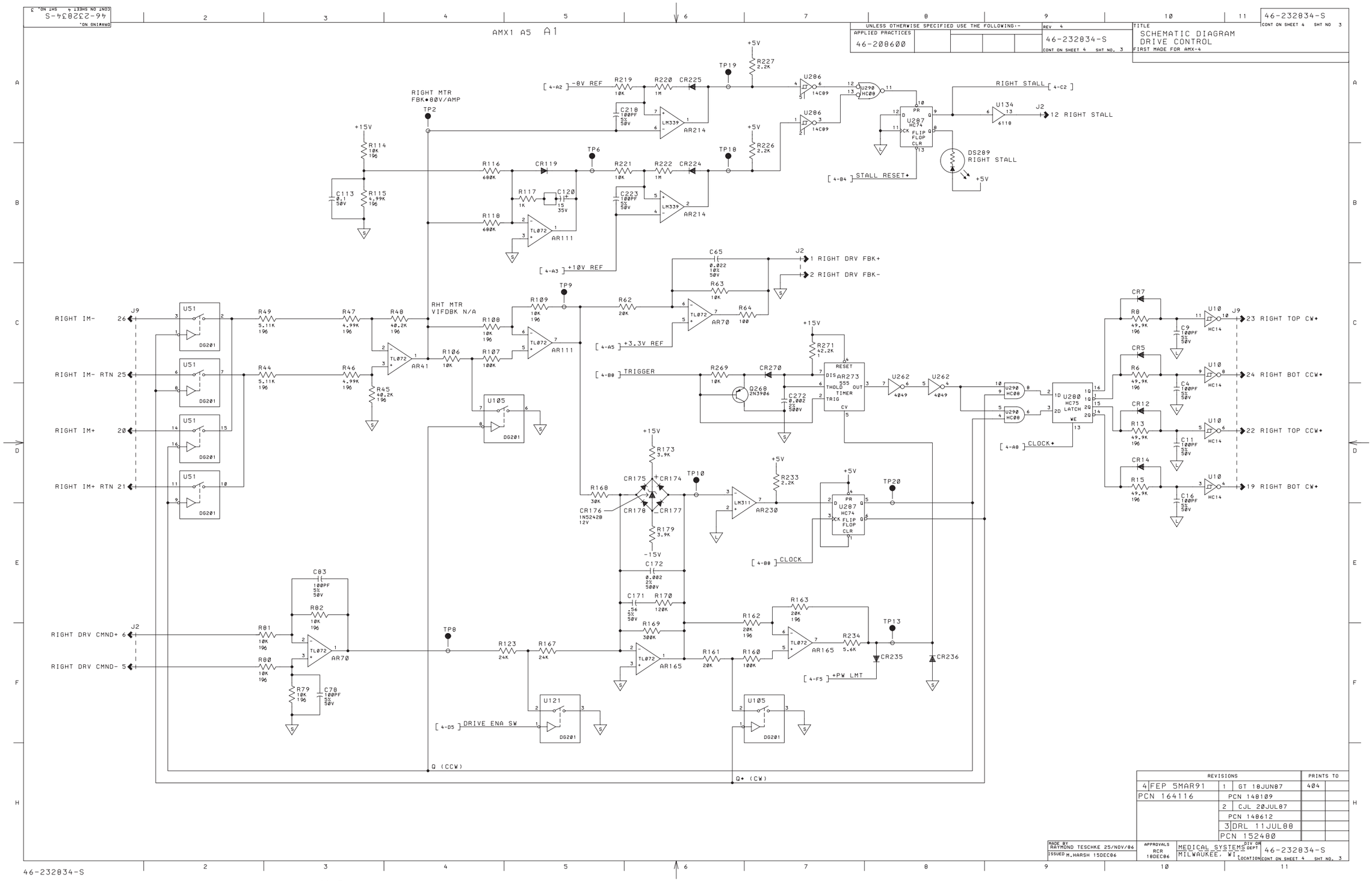
46-232834-S
SCHEMATIC DIAGRAM
DRIVE CONTROL
FIRST MADE FOR AMX-4
AMX1 A5 A1
RIGHT MTR FBK•80V/AMP
RHT MTR VIFDBK N/A
RIGHT STALL
12 RIGHT STALL
DS289 RIGHT STALL
STALL RESET+
+10V REF
1 RIGHT DRV FBK+
2 RIGHT DRV FBK-
+3.3V REF
TRIGGER
CLOCK+
CLOCK
+PW LMT
DRIVE ENA SW
RIGHT IM-
RIGHT IM- RTN
RIGHT IM+
RIGHT IM+ RTN
RIGHT DRV CMND+
RIGHT DRV CMND-
23 RIGHT TOP CW+
24 RIGHT BOT CCW+
22 RIGHT TOP CCW+
19 RIGHT BOT CW+
Q (CCW)
Q+ (CW)
REVISIONS
PRINTS TO
4 FEP 5MAR91
PCN 164116
1 GT 18JUN87
PCN 148109
2 CJL 20JUL87
PCN 148612
3 DRL 11JUL88
PCN 152480
MADE BY RAYMOND TESCHKE 25/NOV/86
ISSUED M.HARSH 15DEC86
APPROVALS RCR 18DEC86
MEDICAL SYSTEMS
MILWAUKEE, WI
46-232834-S

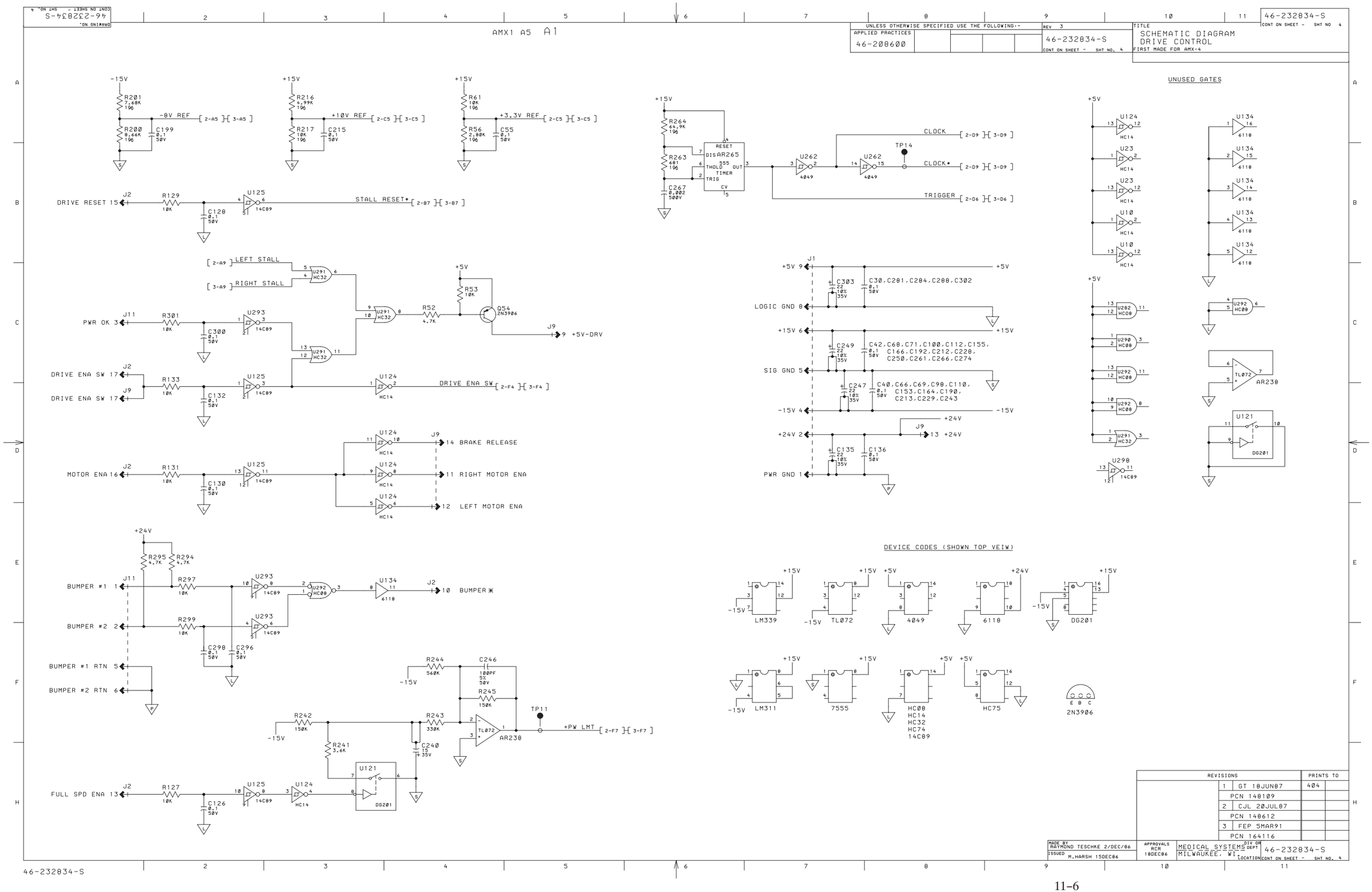
46-232834-S
AMX1 A5 A1
UNLESS OTHERWISE SPECIFIED USE THE FOLLOWING:-
APPLIED PRACTICES
46-208600
REV 3
TITLE
SCHEMATIC DIAGRAM
DRIVE CONTROL
FIRST MADE FOR AMX-4
UNUSED GATES
DEVICE CODES (SHOWN TOP VEIW)
DRIVE RESET 15
STALL RESET*
LEFT STALL
RIGHT STALL
PWR OK 3
+5V-DRV
DRIVE ENA SW 17
DRIVE ENA SW
MOTOR ENA 16
BRAKE RELEASE
RIGHT MOTOR ENA
LEFT MOTOR ENA
BUMPER #1
BUMPER #2
BUMPER #1 RTN
BUMPER #2 RTN
BUMPER *
FULL SPD ENA 13
+PW LMT
CLOCK
CLOCK*
TRIGGER
LOGIC GND 8
SIG GND 5
PWR GND 1
LM339
TL072
4049
6118
DG201
LM311
7555
HC08
HC14
HC32
HC74
14C89
HC75
2N3906
REVISIONS
PRINTS TO
MADE BY RAYMOND TESCHKE 2/DEC/86
ISSUED M.HARSH 15DEC86
APPROVALS RCR 18DEC86
MEDICAL SYSTEMS MILWAUKEE, WI.
46-232834-S

SECTION 12
DRIVE POWER AMPLIFIER
AMX1 A0 A2
. 1(232831G2

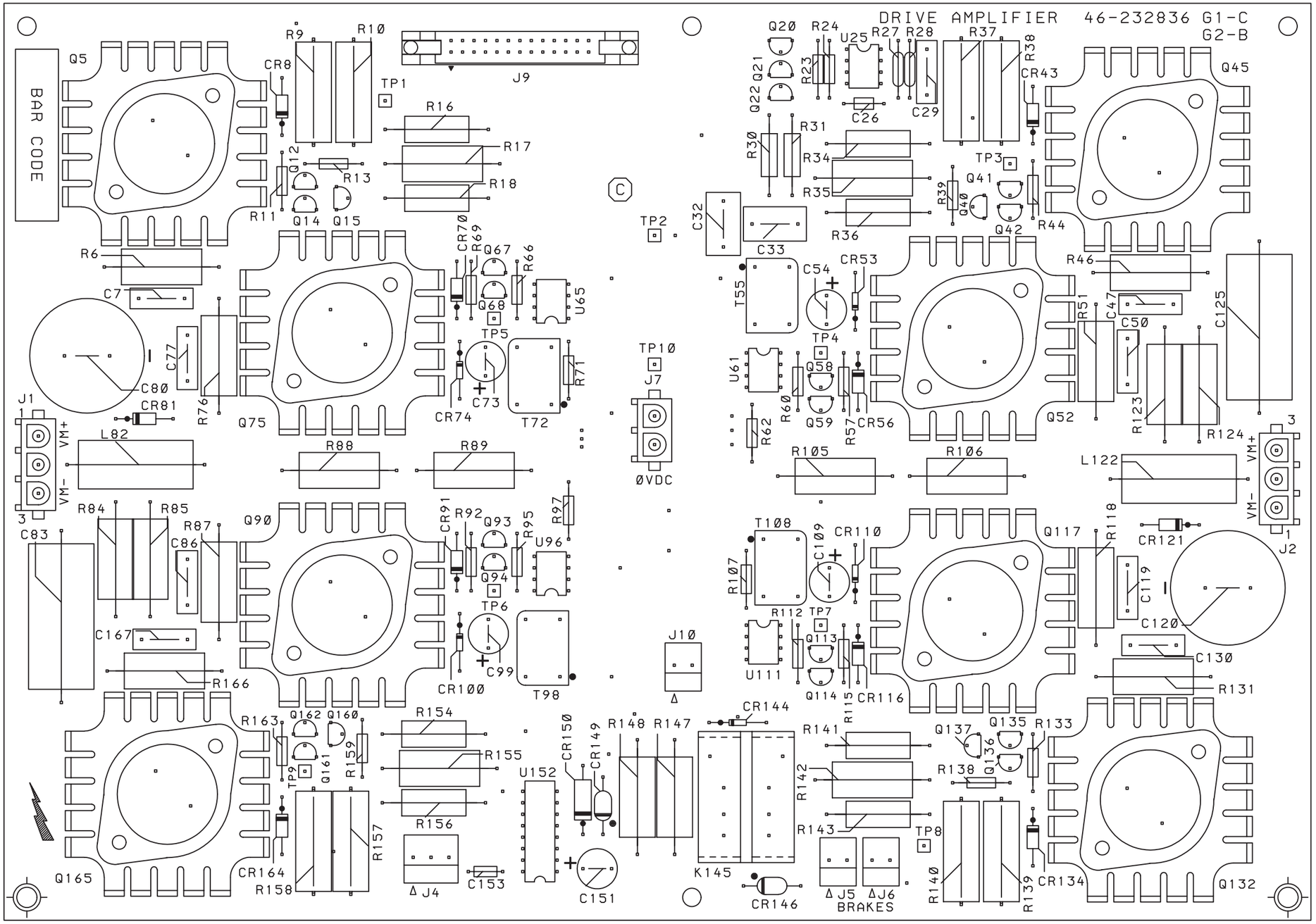

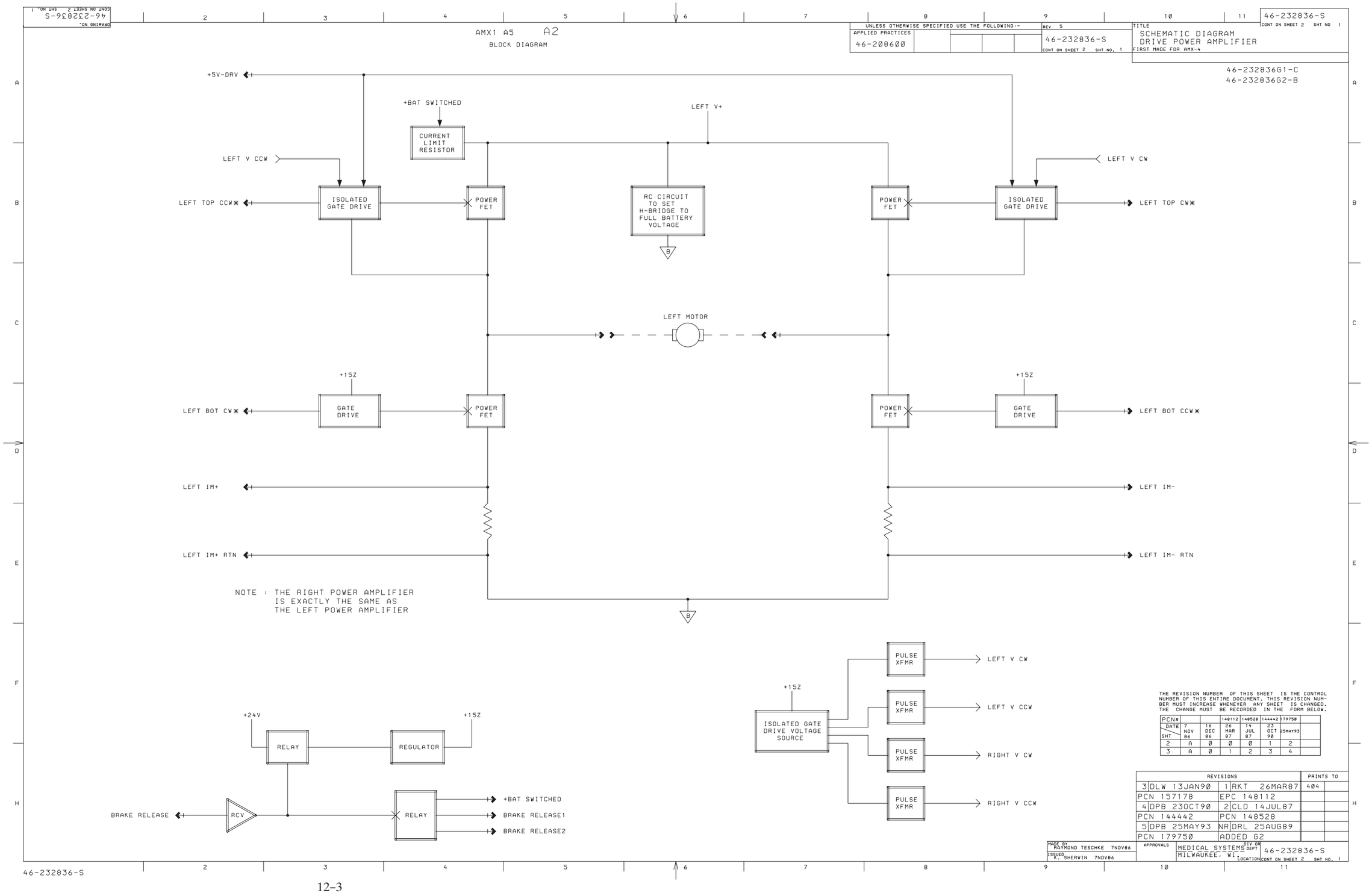
46-232836-S
AMX1 A5 A2
BLOCK DIAGRAM
UNLESS OTHERWISE SPECIFIED USE THE FOLLOWING:-
APPLIED PRACTICES
46-208600
REV 5
46-232836-S
TITLE
SCHEMATIC DIAGRAM
DRIVE POWER AMPLIFIER
FIRST MADE FOR AMX-4
46-232836G1-C
46-232836G2-B
+5V-DRV
+BAT SWITCHED
CURRENT LIMIT RESISTOR
LEFT V+
LEFT V CCW
LEFT V CW
LEFT TOP CCW*
ISOLATED GATE DRIVE
POWER FET
RC CIRCUIT TO SET H-BRIDGE TO FULL BATTERY VOLTAGE
LEFT TOP CW*
LEFT MOTOR
+15Z
LEFT BOT CW*
GATE DRIVE
LEFT BOT CCW*
LEFT IM+
LEFT IM-
LEFT IM+ RTN
LEFT IM- RTN
NOTE : THE RIGHT POWER AMPLIFIER IS EXACTLY THE SAME AS THE LEFT POWER AMPLIFIER
PULSE XFMR
LEFT V CW
LEFT V CCW
RIGHT V CW
RIGHT V CCW
ISOLATED GATE DRIVE VOLTAGE SOURCE
+24V
RELAY
REGULATOR
BRAKE RELEASE
RCV
+BAT SWITCHED
BRAKE RELEASE1
BRAKE RELEASE2
THE REVISION NUMBER OF THIS SHEET IS THE CONTROL NUMBER OF THIS ENTIRE DOCUMENT. THIS REVISION NUMBER MUST INCREASE WHENEVER ANY SHEET IS CHANGED. THE CHANGE MUST BE RECORDED IN THE FORM BELOW.
REVISIONS
PRINTS TO
3 DLW 13JAN90 1 RKT 26MAR87 404
PCN 157178 EPC 148112
4 DPB 23OCT90 2 CLD 14JUL87
PCN 144442 PCN 148528
5 DPB 25MAY93 NR DRL 25AUG89
PCN 179750 ADDED G2
MADE BY RAYMOND TESCHKE 7NOV86
ISSUED K. SHERWIN 7NOV86
APPROVALS
MEDICAL SYSTEMS MILWAUKEE, WI
46-232836-S

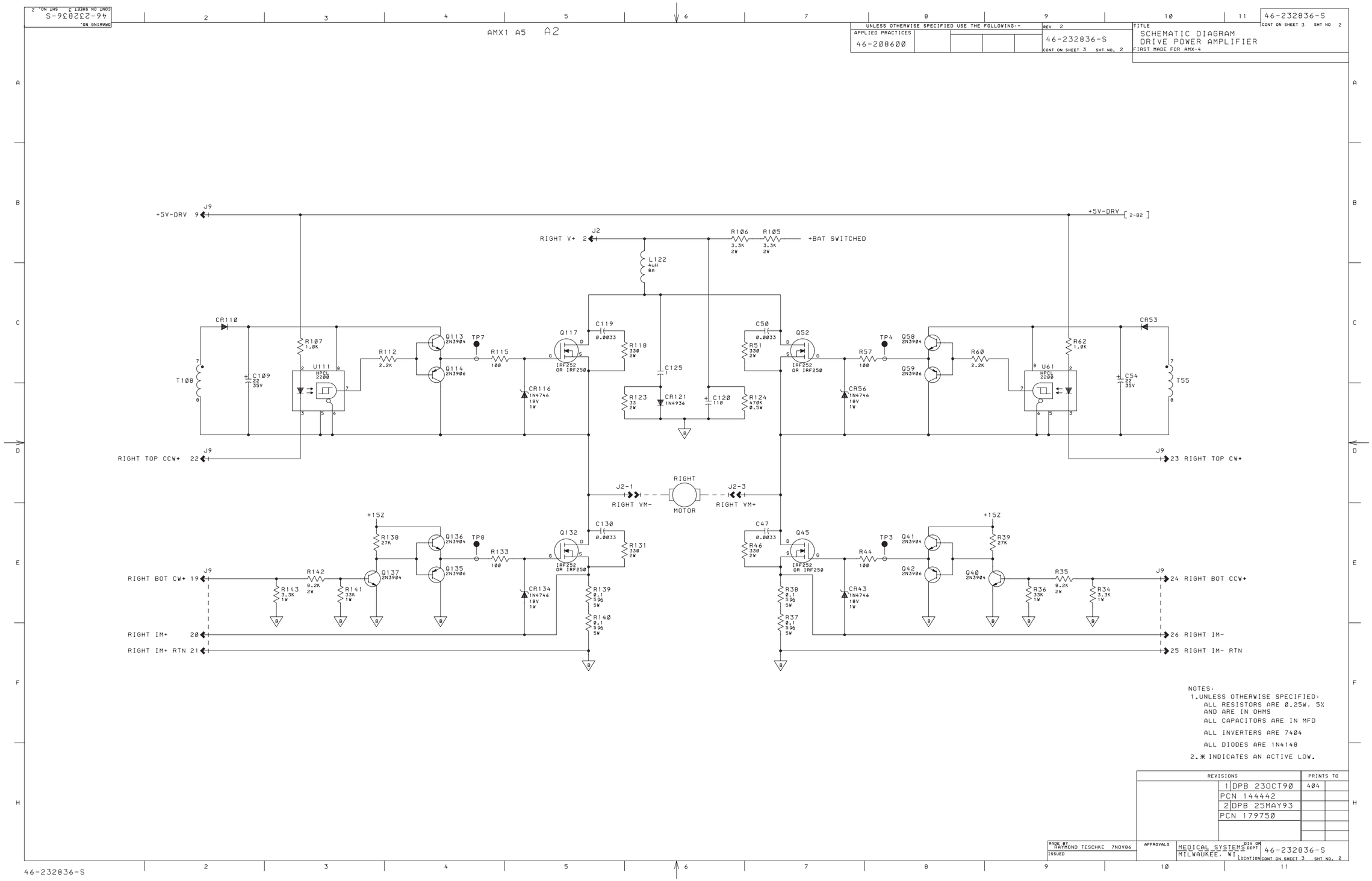
AMX1 A5 A2
UNLESS OTHERWISE SPECIFIED USE THE FOLLOWING:-
APPLIED PRACTICES
46-208600
REV 2
46-232836-S
CONT ON SHEET 3 SHT NO. 2
TITLE
SCHEMATIC DIAGRAM
DRIVE POWER AMPLIFIER
FIRST MADE FOR AMX-4
+5V-DRV 9 J9
+5V-DRV [2-B2]
RIGHT V+ 2 J2
R106 3.3K 2W
R105 3.3K 2W
+BAT SWITCHED
L122 4uH 8A
CR110
R107 1.0K
U111 HPCL 2200
C109 22 35V
T108
R112 2.2K
Q113 2N3904
Q114 2N3906
TP7
R115 100
Q117 IRF252 OR IRF250
C119 0.0033
R118 330 2W
CR116 1N4746 18V 1W
C125 1
R123 33 2W
CR121 1N4936
C120 110
R124 470K 0.5W
C50 0.0033
R51 330 2W
Q52 IRF252 OR IRF250
R57 100
TP4
CR56 1N4746 18V 1W
Q58 2N3904
Q59 2N3906
R60 2.2K
U61 HPCL 2200
R62 1.0K
CR53
C54 22 35V
T55
RIGHT TOP CCW+ 22 J9
23 RIGHT TOP CW+ J9
J2-1 RIGHT VM-
RIGHT MOTOR
J2-3 RIGHT VM+
+15Z
R138 27K
Q136 2N3904
Q135 2N3906
TP8
R133 100
Q132 IRF252 OR IRF250
C130 0.0033
R131 330 2W
RIGHT BOT CW+ 19 J9
R142 8.2K 2W
R143 3.3K 1W
R141 33K 1W
Q137 2N3904
CR134 1N4746 18V 1W
R139 0.1 5% 5W
R140 0.1 5% 5W
RIGHT IM+ 20
RIGHT IM+ RTN 21
C47 0.0033
R46 330 2W
Q45 IRF252 OR IRF250
TP3
R44 100
CR43 1N4746 18V 1W
R38 0.1 5% 5W
R37 0.1 5% 5W
Q41 2N3904
Q42 2N3906
R39 27K
Q40 2N3904
R36 33K 1W
R35 8.2K 2W
R34 3.3K 1W
24 RIGHT BOT CCW+ J9
26 RIGHT IM-
25 RIGHT IM- RTN
NOTES:
1.UNLESS OTHERWISE SPECIFIED:
ALL RESISTORS ARE 0.25W, 5%
AND ARE IN OHMS
ALL CAPACITORS ARE IN MFD
ALL INVERTERS ARE 7404
ALL DIODES ARE 1N4148
2.* INDICATES AN ACTIVE LOW.
REVISIONS
PRINTS TO
1 DPB 23OCT90 404
PCN 144442
2 DPB 25MAY93
PCN 179750
MADE BY RAYMOND TESCHKE 7NOV86
ISSUED
APPROVALS
MEDICAL SYSTEMS
MILWAUKEE, WI
46-232836-S
CONT ON SHEET 3 SHT NO. 2

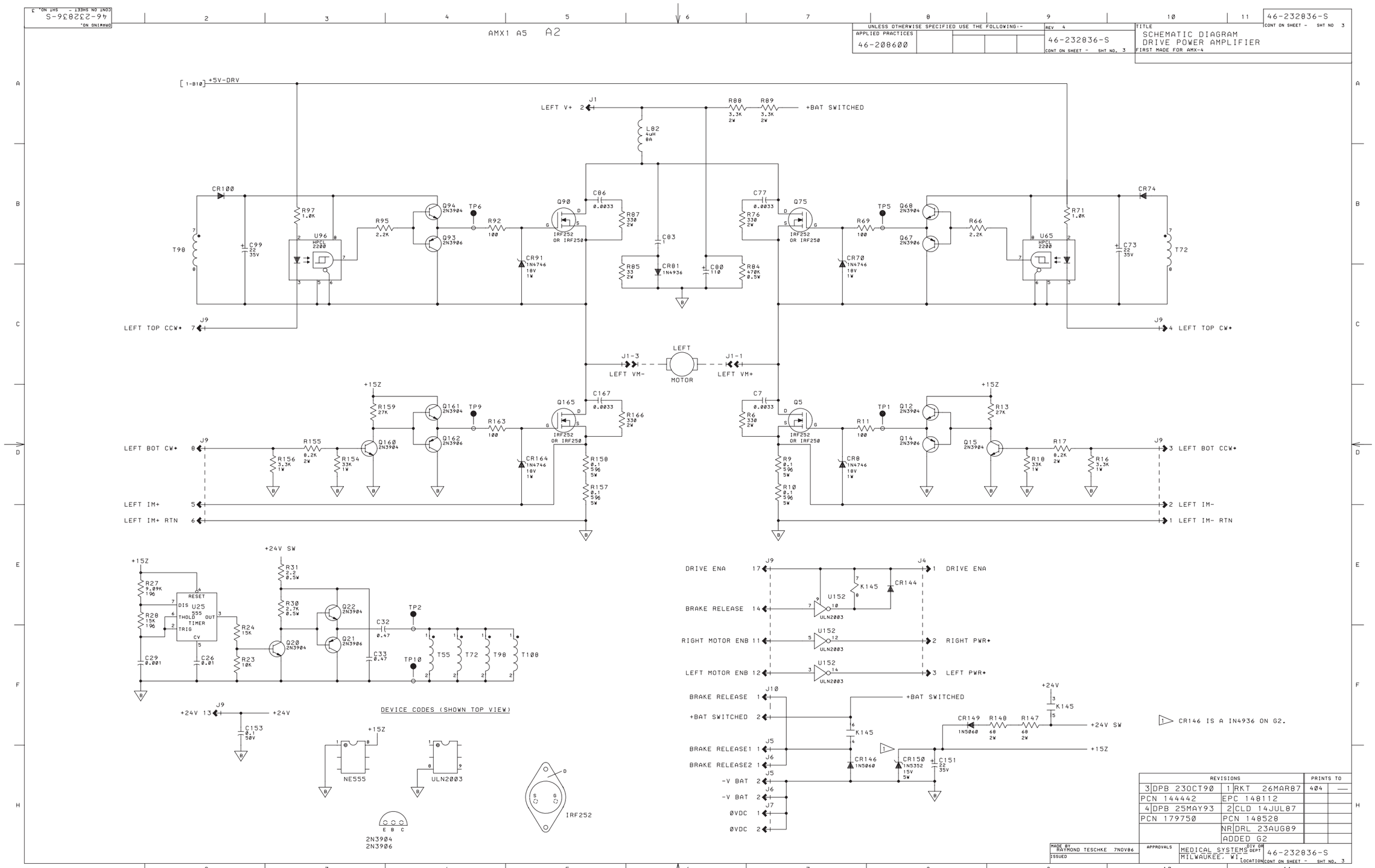
46-232836-S
CONT ON SHEET - SHT NO. 3
DRAWING NO.
AMX1 A5 A2
UNLESS OTHERWISE SPECIFIED USE THE FOLLOWING:-
APPLIED PRACTICES
46-208600
REV 4
46-232836-S
CONT ON SHEET - SHT NO. 3
TITLE
SCHEMATIC DIAGRAM
DRIVE POWER AMPLIFIER
FIRST MADE FOR AMX-4
[1-B10] +5V-DRV
LEFT V+
J1
R88 3.3K 2W
R89 3.3K 2W
+BAT SWITCHED
L82 40uH 8A
CR100
R97 1.0K
U96 HPCL 2200
R95 2.2K
Q94 2N3904
Q93 2N3906
TP6
R92 100
Q90 IRF252 OR IRF250
C86 0.0033
R87 330 2W
C83 1
R85 33 2W
CR81 1N4936
C80 110
R84 470K 0.5W
CR91 1N4746 18V 1W
T98
C99 22 35V
LEFT TOP CCW+
J9
C77 0.0033
R76 330 2W
Q75 IRF252 OR IRF250
TP5
R69 100
Q68 2N3904
Q67 2N3906
R66 2.2K
CR70 1N4746 18V 1W
CR74
R71 1.0K
U65 HPCL 2200
C73 22 35V
T72
LEFT TOP CW+
J1-3
LEFT VM-
LEFT MOTOR
J1-1
LEFT VM+
+15Z
R159 27K
Q161 2N3904
Q162 2N3906
TP9
R163 100
Q165 IRF252 OR IRF250
C167 0.0033
R166 330 2W
LEFT BOT CW+
R155 8.2K 2W
R156 3.3K 1W
R154 33K 1W
Q160 2N3904
CR164 1N4746 18V 1W
R158 0.1 5% 5W
R157 0.1 5% 5W
LEFT IM+
LEFT IM+ RTN
C7 0.0033
R6 330 2W
Q5 IRF252 OR IRF250
TP1
R11 100
Q12 2N3904
Q14 2N3906
R13 27K
Q15 2N3904
R17 8.2K 2W
R18 33K 1W
R16 3.3K 1W
R9 0.1 5% 5W
R10 0.1 5% 5W
CR8 1N4746 18V 1W
LEFT BOT CCW+
LEFT IM-
LEFT IM- RTN
+24V SW
R27 9.09K 1%
R28 15K 1%
U25 555 TIMER
RESET
DIS
THOLD
TRIG
OUT
CV
R31 2.2 0.5W
R30 2.7K 0.5W
R24 15K
R23 10K
C29 0.001
C26 0.01
Q20 2N3904
Q22 2N3904
Q21 2N3906
C32 0.47
C33 0.47
TP2
TP10
T55
T72
T98
T108
+24V 13
+24V
C153 0.1 50V
DEVICE CODES (SHOWN TOP VIEW)
NE555
ULN2003
IRF252
2N3904
2N3906
DRIVE ENA
BRAKE RELEASE
RIGHT MOTOR ENB
LEFT MOTOR ENB
U152 ULN2003
K145
CR144
RIGHT PWR+
LEFT PWR+
J10
J4
J5
J6
J7
+BAT SWITCHED
BRAKE RELEASE1
BRAKE RELEASE2
-V BAT
0VDC
CR146 1N5060
CR150 1N5352 15V 5W
C151 22 35V
CR149 1N5060
R148 68 2W
R147 68 2W
+24V
+24V SW
+15Z
CR146 IS A IN4936 ON G2.
REVISIONS
PRINTS TO
3 DPB 23OCT90
1 RKT 26MAR87
404
PCN 144442
EPC 148112
4 DPB 25MAY93
2 CLD 14JUL87
PCN 179750
PCN 148528
NR DRL 23AUG89
ADDED G2
MADE BY RAYMOND TESCHKE 7NOV86
ISSUED
APPROVALS
MEDICAL SYSTEMS
MILWAUKEE, WI
DIV OR DEPT
LOCATION
46-232836-S
CONT ON SHEET - SHT NO. 3

SECTION , 3
HIDH VOLTADE TRANSFORMER
AMX, A6 A,
46(–7) 554D,

NO BOARD DRAWIND

DRAWING NO. 46-270954-S
CONT ON SHEET - SHT NO. 1

UNLESS OTHERWISE SPECIFIED USE THE FOLLOWING:-
APPLIED PRACTICES
46-208600

REV A 0
46-270954-S
CONT ON SHEET - SHT NO. 1

TITLE
SCHEMATIC DIAGRAM
HIGH VOLTAGE TRANSFORMER ASM
FIRST MADE FOR AMX-4

46-270954-S
CONT ON SHEET - SHT NO 1

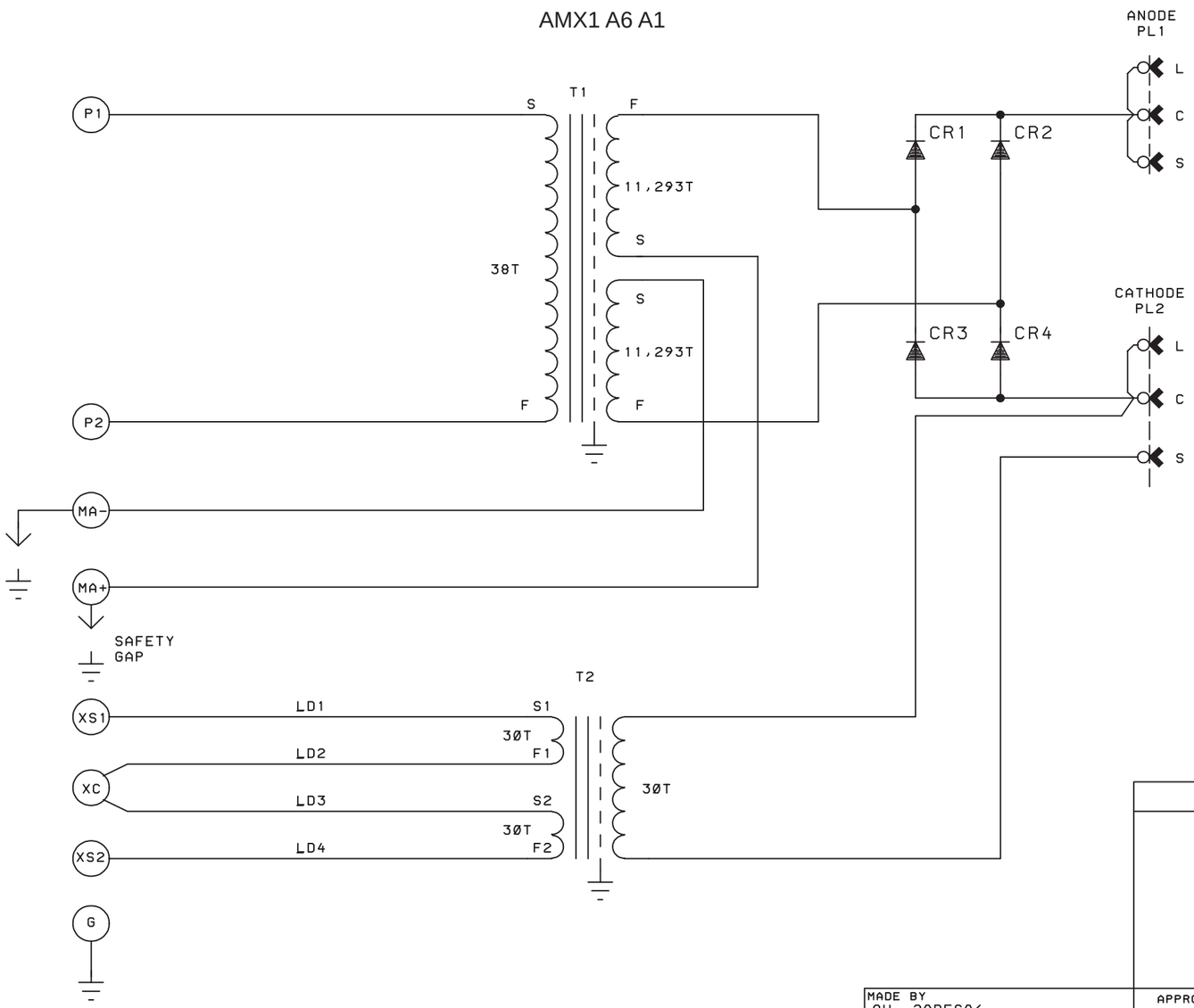

NOTES

1. T1-H.T.XFMR NS/NP = 594.37.
2. T2-FIL XFMR NS/NP = 1.0.
3. CR1,CR2,CR3,CR4 - 55R125 RECT ASM.
4. PL1,PL2 - H.V. CABLE RECEPTACLE.

REVISIONS		PRINTS TO	
		404	

MADE BY OU 29DEC86
ISSUED

APPROVALS

MEDICAL SYSTEMS DIV OR DEPT
MILWAUKEE, WI LOCATION

46-270954-S
CONT ON SHEET - SHT NO. 1

46-270954-S

SECTION 14
HALL EFFECT TUBE PARKED SENSOR
AMX1 A2 S1
46(288962G1

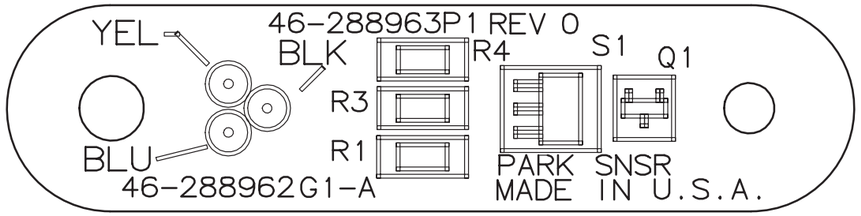

HALL EFFECT TUBE PARKED SENSOR BOARD 46(288962G1

AMX1 A2 S1
46(288962(S

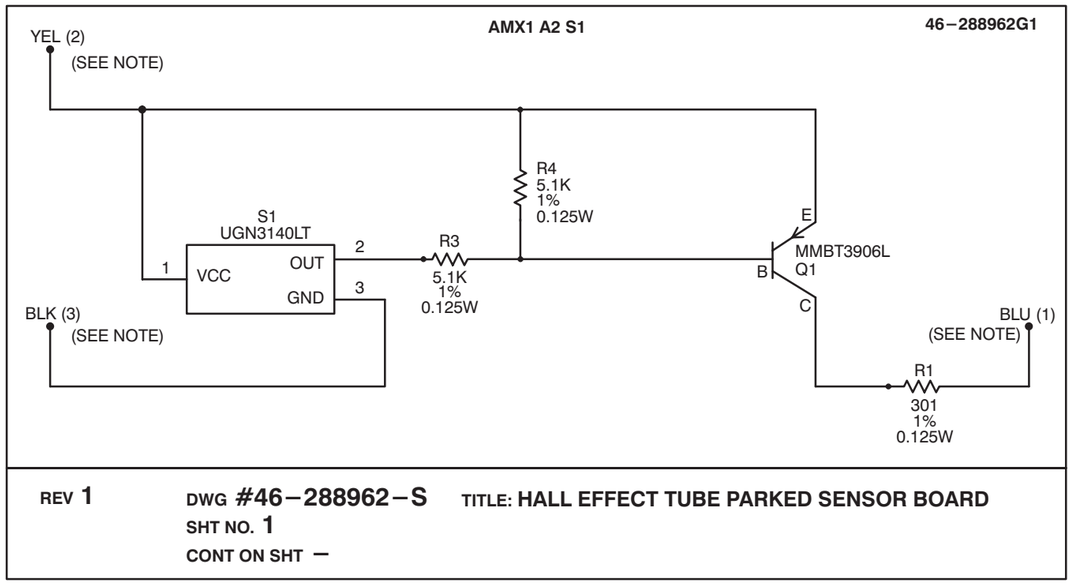

Note: Refer to the AMX−4 Overall Wiring Schematic 2115090SCH (Section 2) for the following:

- Blue lead (1) connects to AMX1 A2 TS2−1 (Sheet 8, Zone F6)
- Yellow lead (2) connects to AMX1 A2 TS2−2 (Sheet 8, Zone F6)
- Black lead (3) connects to AMX1 A2 TS2−3 (Sheet 2, Zone D7)

SECTION , 5
AMX−A3 A, BATTERY SENSE CIRCUIT
46(3−, 37) (S

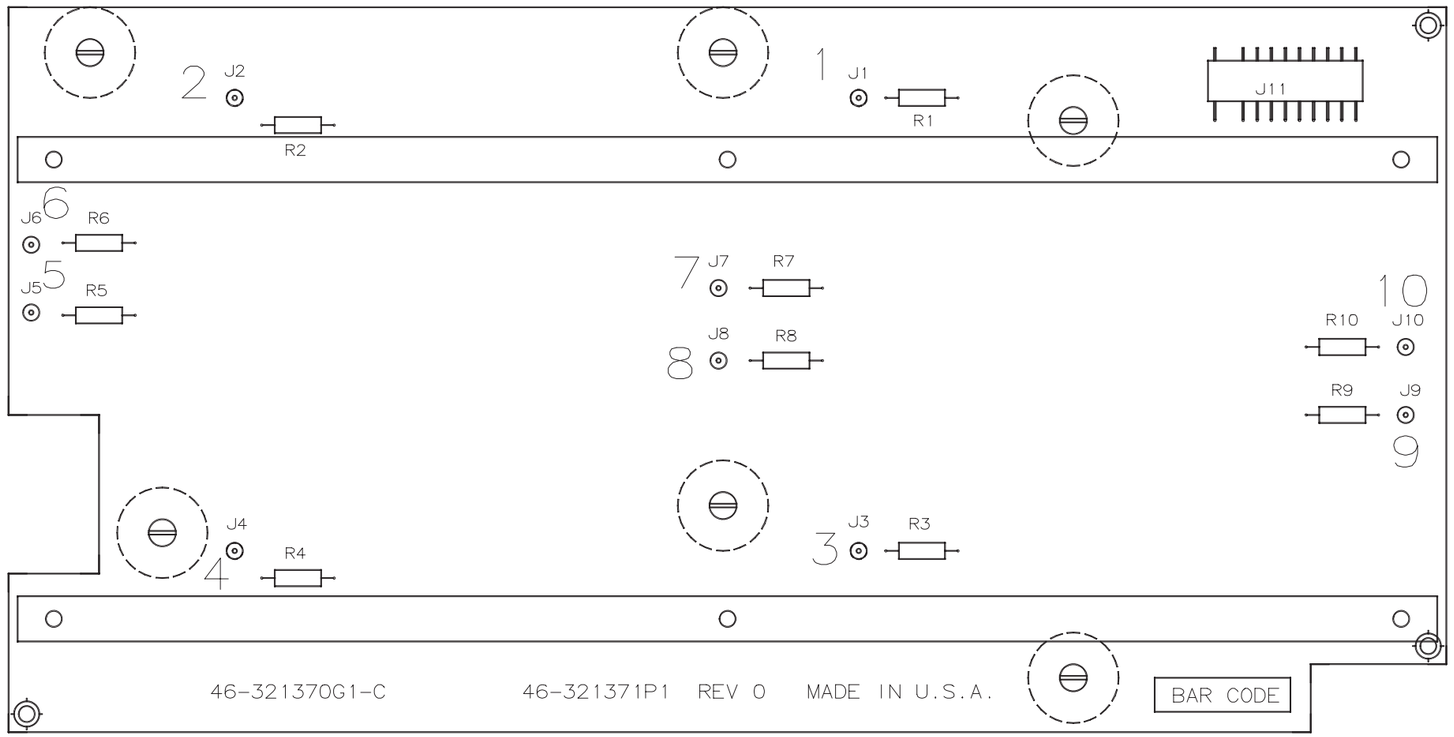

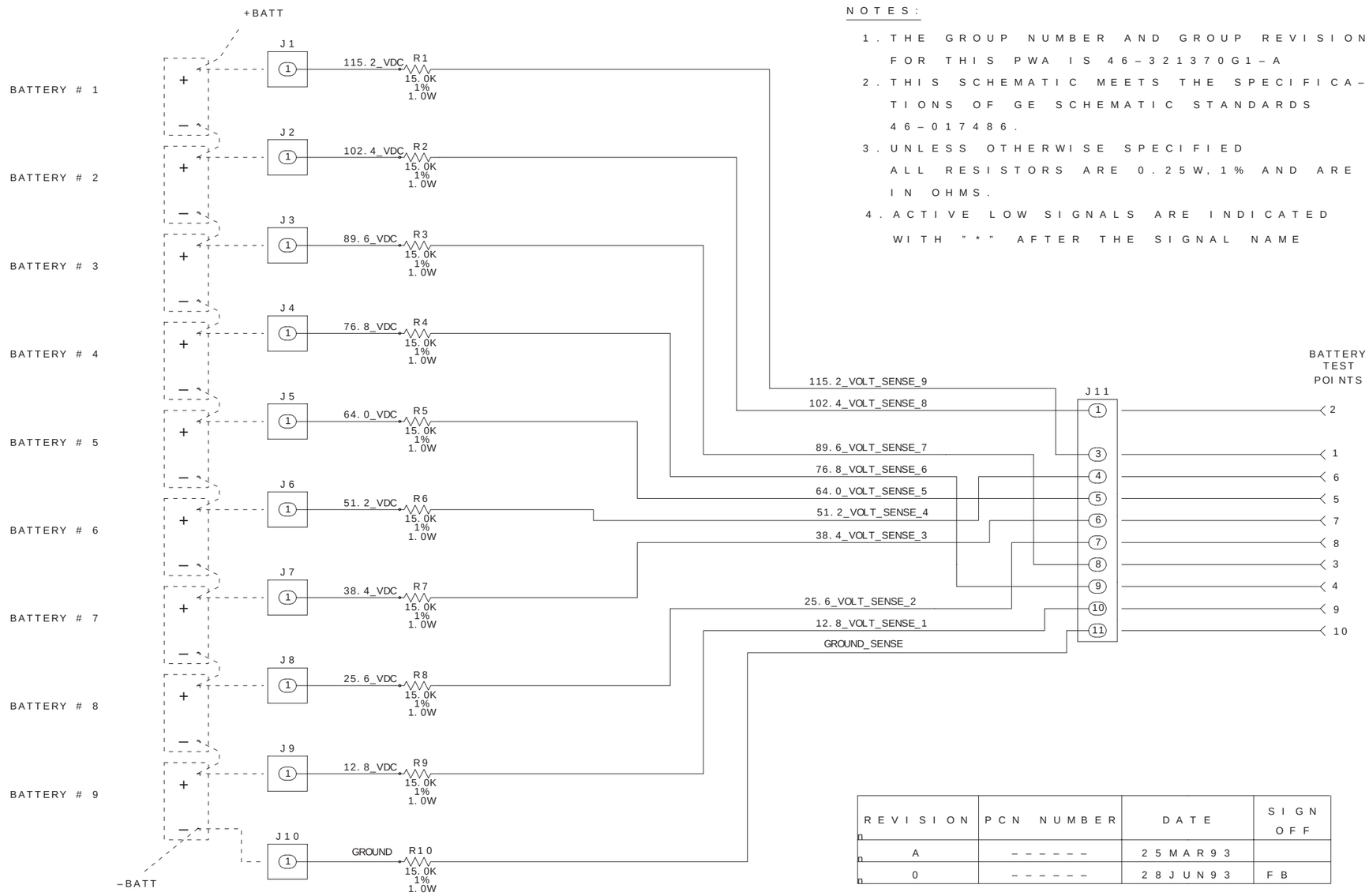

NOTES:

1. THE GROUP NUMBER AND GROUP REVISION FOR THIS PWA IS 46–321370G1–A
2. THIS SCHEMATIC MEETS THE SPECIFICATIONS OF GE SCHEMATIC STANDARDS 46–017486.
3. UNLESS OTHERWISE SPECIFIED ALL RESISTORS ARE 0.25W, 1% AND ARE IN OHMS.
4. ACTIVE LOW SIGNALS ARE INDICATED WITH "*" AFTER THE SIGNAL NAME

REVISION	PCN NUMBER	DATE	SIGN OFF
A	------	25MAR93	
0	------	28JUN93	FB

▲ PER PENDING PCN 180641

BLOCK PATHNAME				SHEET 1 OF 1
REV 0	▲ BATTERY SENSE	LOCATION CODE	APPROVALS	GE MEDICAL SYSTEMS
DRAWING NO. 46–321370–S	FIRST MADE FOR AMX4	XXXX–XXX–XXX		MILWAUKEE WI
SHT. NO. 1 CONT. ON SHT. NO. –	MADE BY D. VOIGHT DATE 24–FEB–93 / ISSUED FRED BOEHM DATE 28–JUN–93		PRINTS TO 404	REVISIONS

TOM HELMINIAK 28–JUN–93