Instructions For Use

Volume 1

UniCel DxC Synchron Access Clinical System Integrated Workstations

For *In Vitro* Diagnostic Use

This manual is intended for
UniCel DxC 660i
UniCel DxC 680i
UniCel DxC 860i
UniCel DxC 880i

A93829AC
March 2014

Beckman Coulter, Inc.
250 S. Kraemer Blvd.
Brea, CA 92821 U.S.A.

BECKMAN COULTER

Instructions For Use
UniCel DxC Synchron Access Clinical System
PN A93829AC (March 2014)

© 2014 Beckman Coulter, Inc.
All rights reserved

Trademarks
Beckman Coulter, the Beckman Coulter logo, Access, Synchron, UniCel, and DxC are trademarks of Beckman Coulter, Inc. and are registered in the USPTO. All other trademarks are the property of their respective owners.

Following is a list of Beckman Coulter trademarks

- AccuSense
- Microtube
- DxI
- SPINCHRON

Find us on the World Wide Web at:
www.beckmancoulter.com

EC REP
Beckman Coulter Ireland, Inc.
Mervue Business Park, Mervue Galway, Ireland 353 91 774068

Beckman Coulter do Brasil Com e Imp de Prod de Lab Ltda
Estr dos Romeiros, 220 - Galpao G3 - Km 38.5
06501-001 - Sao Paulo - SP - Brasil
CNPJ: 42.160.812/0001-44

製造販売元 : ベックマン・コールター株式会社
東京都江東区有明三丁目 5 番 7 号
TOC 有明ウエストタワー

贝克曼库尔特有限公司，
美国加利福尼亚州，Brea 市，S. Kraemer 大街 250 号，
邮编：92821 电话：(001) 714-993-5321

Revision History

Initial Issue, A47747AA, 2/08
Software version 3.0

A47747AB, 12/08
Software version 4.0

A47747AC, 1/10
Software version 4.9

A93829AA, 10/10
Software version 5.0

A93829AB, 10/12
Software version 5.0

Revised Laser Bar Code Caution Label and Laser Certification Label.

Added Note to Environmental Conditions section.

A93829AC, 03/14
Changes:

Software version 5.4
Removed references to discontinued CX and LX products.

CHAPTER 2, *Software Description:*

- Updated the Program Structure diagrams in Figures 2.13 through 2.20 in the 'Integrated Workstation Program Structure' section.

CHAPTER 4, Sample Programming and Processing*:*

- Clarified definition of rerunning a sample in Program Samples, 'Add Tests or Rerun a Sample' section: "The Rerun option allows re-analysis of any test, sample or rack..."

CHAPTER 5, *Quality Control*:

- Added information to note in Program QC section, 'Manually Programming Control Samples' procedure, Step 7, "Select Save F10 to save the control programming...": "Manually-programmed QC control IDs must be cleared manually."

CHAPTER 6, *Supplies:*

- Added new procedure to DxI Supplies and Conditions, 'Substrate' section: 'Change an In-Use Substrate Bottle'.
- Added warning to 'Wash Buffer' section: "Wash buffer contains ProClin 300 preservative..."
- Added procedure to 'Wash Buffer' section: 'Change an In-Use Bulk Wash Buffer Container'.
- Added information to 'Reaction Vessels' section: "When the hopper is full, there are enough RVs for at least three hours of continuous processing."
- Added information to Warning in 'Liquid Waste' section: "Reagents, calibrators, and controls used with the system may contain small quantities of sodium azide preservative..."
- Added information to Warning in 'Liquid Waste' section: "In some circumstances, it may be necessary to change the in-use liquid waste container..."

- Added procedure to 'Liquid Waste' section: 'Change an In-Use Bulk Liquid Waste Container'.
- Added information to Caution in 'Solid Waste', 'Change a Full Solid Waste Container': "Do not open the solid waste door while the system is initializing..."
- Added notes after Warnings in 'Rgts/Cal: DxI Tab Overview', 'Load a Reagent Pack' section: "The system prevents you from accidentally loading..." and "Loading a reagent pack does not automatically enable its assay..."
- Added information to 'Rgts/Cal: DxI Tab Overview' section,'Load a Reagent Pack' procedure, Step 2, "Mix the new, unpunctured packs..." and "NOTE Do not invert packs that have been punctured..."
- Added new step and Warning to 'Rgts/Cal: DxI Tab Overview' section,'Load a Reagent Pack' procedure, Step 6, "Carefully review the Reagent Supplies screen..."
- Added note to 'Load/Unload Reagent' section, 'Load/Unload Modular Chemistries (MC)' procedure, Step 8, "Use the hand-held bar code reader to scan the reagent bar code...": "The Lot # field has 6 characters only. Do not enter the alpha character of the lot number."

CHAPTER 7, *Calibration:*

- Updated the 'Load Calibrator from External Media' procedure to reflect current software.

CHAPTER 8, System Status, Instrument Commands, and Utilities*:*

- Added 'ISE Ratio Pump Count' row to Table 8.2 Counters in 'Cycle Count Description' section: "The total number of ISE Ratio Pump cycles when it aspirates and dispenses reagents, regardless of volume. The Ratio Pump must be replaced before 240,000 cycle counts by a trained BCI representative."
- Updated 'System Shutdown/Restart' section to standardize the 'Shut Down the DxC' and 'Restart the DxC' procedures. Added Extended Shutdown information.
- Added note to ‘Backup/Restore’, ‘Alignment Data’ section: "Beckman Coulter recommends that you backup data after every alignment procedure."

CHAPTER 9, Independent Mode*:*

- Updated Figure 9.1 'DxC Sample Loading Area and Run Button covers' in 'UCTA is Non-operational' procedure.

CHAPTER 10, *System Setup:*

- Added note to 'Calibrator Set Points Values' section: "IMPORTANT Any changes to the calibrator set points for a User Defined Reagent..."
- Clarified terminology in 'Auto Serum Index/ORDAC' AutoORDAC section.
- Clarified Analytical Range definition in 'Reportable Ranges Setup' section.
- Added important note to Chemistry Parameters, 'Calibrator Set Points' section: "Any changes to the calibrator values for a User Defined Reagent must be modified within the user-defined parameters setup. These must not be changed using the Rgts/Cal menu."
- Clarified 'Processing Parameters', 'Usable Result Range' section: "If any of the Usable Result Range fields are edited..."

CHAPTER 11, *System Reference:*

- In the Environmental Conditions section, Table 11.10 Working Environment, Temperature, Warm-up Time, Humidity and Elevation, clarified the limit for the rate of ambient temperature change: "+18°C to +32°C, less than or equal to 2°C change in 1/2 an hour".
- In the System Monitoring, 'DxI Codes Converted to DxC Codes for Integrated Workstation Reporting' section, added QSD 'Insufficient reagent dispensed' row to Table 11.21, DxI Codes Converted to DxC Codes for DxC 600i Reporting.

CHAPTER 12, *Maintenance:*

- Updated the Electronic Maintenance Log for Weekly, Monthly, Three-Month, and Six-Month Maintenance procedures.
- Updated the DxI Backup procedure to cover USB backup details.
- Added Caution to Daily Maintenance, 'Shake the DxI Solid Waste Container' procedure and 'Run DxI Clean Routine': "Do not open the solid waste door while either clean routine is in progress..."
- Added Warning to Daily Maintenance, 'Run DxI Clean Routine': "Ethanol and methanol are extremely flammable..."
- Added note to Daily Maintenance, 'Prime the Fluidics' procedure: "The Prime Fluidics procedure is only required if the Utility routine is not enabled."
- Added information and note to Daily Maintenance, 'Prime the Fluidics' procedure, Step 2, "Select one or more of the components you want to prime...": "Select the Wash Buffer Bubble Detector box to flush wash buffer past the wash buffer flow sensor..." and "NOTE Before priming the wash buffer flow sensor, make sure that the system has sufficient wash buffer..."
- Added information to note at the beginning of the Twice-Weekly Maintenance, 'Clean Flow Cell (Automated)' : "If you are doing... This procedure takes approximately 37 minutes to complete."
- Added note to Twice-Weekly Maintenance, 'Clean Flow Cell (Automated)', Step 3 'Select 10 Clean Flow Cell, Cups & CC Probes/Mixers.': "This selection always cleans the Flow Cell..."
- Added statement to 'Clean Probes (Exterior)' procedure Step 2, 'Wipe the outside...' "Do not use gauze, since it can snag the tip and damage the Mixer Paddle."
- Added 'Check Syringe Tightness' procedure to Weekly Maintenance.
- Added statement to Monthly Maintenance, 'Clean Probes (Exterior)' and 'Clean Mixers' procedures: "Do not use gauze..."
- Moved 'Clean Chloride Electrode Tip and Flow Cell Port' from Monthly Maintenance to As-Needed Maintenance.
- Updated photos in Monthly Maintenance, 'BUNm/UREAm Electrode Maintenance (DxC 800 Only)' procedure.
- Added 'Replace 500 µL Reagent Syringe Plunger' procedure to Three-Month Maintenance.
- Added 'Replace 100 µL Sample Syringes' procedure to Six-Month Maintenance.
- Added Caution statements to Four-Month Maintenance, 'Clean the MC Reagent Lines' procedure, Step 14, "If the six-month expiration date has occurred...": "If you are cleaning the glucose stir bar, remove the glucose sensor before removing the stir bar.
- Added Caution statements to 'Four-Month Maintenance', 'Clean the MC Reagent Lines' procedure, Step 15, "Perform the BUNm/UREAm electrode maintenance if maintenance is due....": "Loosen the BUNm/UREAm electrode retainer nut..."

- Updated Other: Yearly Maintenance, 'UCTA Carryover PVT Procedure', Step 11, "Use the following criteria to evaluate the results..."
- Added ‘Replace the BUNm/UREAm Electrode (DxC 800 Only)’ procedure to As Needed/As Required Maintenance.
- Updated the following procedures in ‘Other: 5,000 Test Interval Maintenance’: 'Replace DxI Duck Bill Valve' and 'Initialize the DxI System'.
- Updated the following procedures in ‘Other: 10,000 Test Interval Maintenance’: 'Install Clean DxI Aspirate Probes', 'Install Clean Aspirate Probes', 'Remove and Inspect DxI Dispense Probes', 'Check DxI Pump Fittings - Wash Buffer Reservoir', 'Check DxI Upper Aspirate Peri-Pump Fittings', 'Check DxI Reagent Pipettors and Clean Wash Towers' and 'Check DxI for Fallen RVs'.

CHAPTER 13, *Troubleshooting Calibration and Result Errors:*

- Added two rows to Table 13.10 Error Messages and Corrective Actions: 0x139F0085 "ISE Ratio Pump is approaching 240,000 cycle counts and needs replacement." and 0x139F0086 "ISE Ratio Pump has reached or exceeded 240,000 cycle counts and needs immediate replacement."

Safety Notice

Read all product manuals and consult with Beckman Coulter-trained personnel before you operate the instrument. Do not perform any procedure before carefully reading all instructions. Always follow the product labels and manufacturer's recommendations. Contact your Beckman Coulter representative if you have any questions.

Summary of Hazards

Introduction

This section describes the possible hazards of the UniCel Integrated Workstation. The hazards of individual procedures in this manual are included in **Warnings** or **Cautions** within the instructions for that task. Read this section and the Summary of Precautions in this chapter before you operate the system.

Bar Code Reader

Do not adjust or remove the housing of any bar code reader. The bar code readers use lasers and looking directly at the laser light can be hazardous. Assume that the laser may be ON at all times.

Biohazardous Materials

Observe all biohazard precautions when doing maintenance, service, or troubleshooting on the system. This includes but may not be limited to wearing gloves and eye shields, and washing hands after working on contaminated portions of the system.

Follow all laboratory policies and procedures to handle infectious and pathogenic materials.

Cap Piercers and Piercer Probes

The cap piercers in the CTS (Closed Tube Sampling) Assembly and the piercer probes in the UCTA (UniCel Closed Tube Aliquotter) are very sharp and are exposed to potentially biohazardous fluids. The points are sharp and extend below the assemblies. Keep your hands away from the bottom of the assemblies. To prevent injury or exposure, do not touch the points and always wear gloves.

Chemical Handling

Avoid skin contact with reagents and other chemical preparations. Wear protective equipment to work with reagents and other chemical preparations used with the system.

Refer to the related MSDS (Material Safety Data Sheets) for additional information.

CTS Auto-Gloss Handling

Handle the bottle of CTS Auto-Gloss carefully. Prevent spills. This lubricant is very slippery and difficult to clean from the floor.

DxI Warnings

- The DxI analyzer has moving parts that may cause injury. Do not operate the DxI with the covers or doors open.
- Opening the DxI analyzer covers abruptly shuts off power to the upper cabinet, and may cause damage if the system is not in the proper mode and the user interface is not displaying the correct screen. Follow maintenance procedures carefully to prevent system damage.
- The DxI ultrasonic transducers and various chassis areas including the power supply and the main blower carry high voltage. The chassis access panel must be in place before you plug in the intrument.
- To avoid the risk of a fire, replace the AC line fuse only with a fuse of the same type and rating: T 10A, 240V.
- Always plug the DxI into a grounded three-conductor outlet. DO NOT bypass the grounding prong on the plug.
- Do not operate the DxI with the vessel hopper door open.
- Do not defeat the safety interlock switches on the DxI covers.
- Replace substrate bottles only with the top cover closed to avoid spillage into the instrument.
- Ethanol and methanol are extremely flammable. Do not use near heat or flame. Do not ingest. Avoid contact with eyes, skin, and clothing. Use with adequate ventilation.
- Ethanol and methanol are extremely flammable. Do not fill sample tubes on the instrument or within the Sample Presentation Unit. Remove sample tubes immediately after completing the Special Clean routine.
- Do not open the solid waste door while the system is initializing, running a Daily Clean System routine, or running a Special Clean routine. Opening the solid waste door will cancel the routine and the system will enter the Not Ready mode.
- This procedure may expose you to potentially infectious materials. Handle and dispose of biohazard materials according to proper laboratory procedures. Use proper hand, eye and facial protection.
- The disposable aspirate probe brush becomes a biohazard after it has been used to clean aspirate probes. Discard the brush with your biohazard waste. Do not save a used brush for future use.
- The carriages contain many mechanical parts that could puncture the skin. Wear proper hand, eye, and facial protection. Always be careful when reaching for an RV.
- Be careful not to touch the circuit board beneath the vessel hopper when you reach for an RV. You can disturb important electronic connections if you brush against the board.
- Use extreme caution when you handle the air filter. The filter edges are sharp and can puncture the skin.

Electrical Ground

Never operate the system until the power cord is connected correctly to an electrical ground.

Electric Shock

Do not replace or service any components where contact with bare, live, hazardous parts can occur, possibly causing electric shock. Only qualified service personnel must perform this maintenance.

Flammable Materials

Do not use this system near flammable materials.

Hazardous/Biohazardous Substances

Clean spills of blood or other potentially hazardous substances on the DxC and the UCTA with a 10% bleach (sodium hypochlorite) solution or decontamination solution. Follow your laboratory procedure for hazardous materials disposal. If the system must be decontaminated, call your Beckman Coulter Service Representative for help.

NOTE Do not use bleach (sodium hypochlorite) on the DxI analyzer.

MC (Modular Chemistry) and ISE (Ion Selective Electrode) Modules

Keep your fingers away from the MC and ISE modules when you lower them to prevent pinching.

Moving Parts

Do not place hands near any moving part while the system is operating. Lower and/or close protective guards and covers during operation. Failure to properly seat covers could lead to erroneous results.

No Foam Reagent

Wear appropriate Personal Protective Equipment (PPE), including face and eye protection.

During system operation, the No Foam container is under pressure. Sudden loss of pressure can expose the skin or eyes to the No Foam solution. Before you load No Foam, you must correctly depressurize the container. Refer to Refill the No Foam Container for complete instructions. If you breathe the vapor, move to clean air. If the solution contacts your skin or eye, flush the affected area

completely with water for at least 15 minutes. In each case, get medical attention. Refer to the No Foam MSDS for additional information.

Power Cord

You must use a three-pronged (grounded) power cord to connect the instrument to a matching three-wire grounded outlet. Do not use an adapter to connect the power plug to a two-pronged outlet.

Sodium Azide Preservative

Reagents, calibrators and controls used with the system may contain small quantities (< 0.1%) of sodium azide preservative. Sodium azide preservative may form explosive compounds in metal drain lines. Refer to *National Institute for Occupational Safety and Health Bulletin*: Explosive Azide Hazards (8/18/76).

System Motors

To prevent possible injury, press the **STOP** button on the DxC or UCTA to disable the motors before attempting to clear any jams. Follow DxI maintenance procedures to disable motors before opening the main covers.

System Operations and Specifications

Follow the power requirements as stated in the Power Requirements section of the System Reference chapter in this manual, and the procedures and safety warnings throughout this manual.

If you use the equipment in a manner not specified by Beckman Coulter, Inc., the protection provided by the equipment may be impaired.

Waste B Disposal

The contents of the Waste B collection bottle are biohazardous. Handle appropriately.

Summary of Precautions

Introduction

This section summarizes the precautions that you should take when you operate the UniCel Integrated Workstation. Individual precautions associated with a specific procedure in this manual are included in **Caution** boxes within the procedures for that task. Read this section and the Summary of Hazards in this chapter before you operate the system.

AccuSense Glucose Sensor

Clean the reaction cup and stir bar when you replace the sensor. Remove the sensor before you remove the stir bar. To prevent damage to the glucose oxygen sensor membrane tip, do not insert stir bar removal tool, applicator stick, or any other object into the glucose reaction cup unless the sensor has been removed. Do not touch membrane tip of the AccuSense glucose oxygen sensor.

Air Filter Cleaning

Do not put a damp filter on the system. Remaining moisture can damage the system.

Alkaline Buffer Stability

The alkaline buffer reagent is stable for one month on the system. However, if the buffer reagent changes color from pink to a lighter shade of pink, replace it with a fresh bottle of reagent.

Aqueous Calibrator

Repetitive refrigeration of Synchron aqueous calibrators can cause crystal formation. Keep these calibrators at room temperature after you remove them from refrigerated storage. Once opened, the calibrator is stable for the period claimed in the accompanying package insert.

Bar Code Labels

Incorrectly read bar code labels can cause Sample IDs to be mistakenly identified. Always follow your laboratory's process to print, and Beckman Coulter's Bar Code Labeling guidelines to prevent incorrectly read labels.

Beckman Coulter Microtubes

- The sample height in the Microtube is critical for correct sample aspiration on all Synchron systems.
- Do not use non-Beckman Coulter, third party Microtubes, which are not designed and tested on Synchron Systems. These Microtubes can cause system damage or short sampling.

Blood Barrier Collection Tubes

When you use blood collection tubes that contain physical barriers, ensure that the barrier is tightly packed. Loose particles from the barrier can coat or plug instrument components.

BUNm/UREAm Electrode

Loosen the BUNm/UREAm electrode retainer nut approximately one-half turn and withdraw the electrode slightly before removing the stir bar. Make sure the BUNm/UREAm electrode is slightly

withdrawn before reinstalling the stir bar. This prevents possible damage to the delicate electrode tip. After you reinstall the stir bar, tighten the retainer nut to prevent leakage.

CC (Cartridge Chemistry) Subsystems Priming

If you select any two of the CC Subsystem items for priming, all three will prime automatically. Check to make certain that all three areas are ready to be primed if you select any two.

CO_2 Membrane Replacement

Do not touch the membrane surface when installing the quad-ring.

Covers, Doors and Shields

To ensure optimum performance of the system, operate the system with reagent doors and all shields and covers in place. To prevent possible motion errors, verify the proper positioning of any removed and reinstalled cover or shield. Failure to properly seat covers could lead to erroneous results.

CTS Cap Piercer

Only validated closed sample tubes can be processed on the UCTA or the CTS on the DxC System.

CTS Tracking Loss

For systems with 1-Blade Thick CTS, if the system loses network communication (and consequently loses CTS tracking), it may display a message that you must remove the sample cap if you move a tube to a different instrument.

- A normal shutdown or reboot does NOT lose CTS tracking or generate this message.
- If you leave the cap on a previously-pierced tube and the cap is pierced a second time, pieces of rubber can fall into the sample.
- You will be notified when full CTS Tracking is restored.

Diethylamine HCl and the Calcium ISE

Do not use controls containing diethylamine HCl. This chemical will damage the calcium ISE.

DxC System Backup

If you use a diskette to back up the system, after you insert the diskette into the floppy disk drive, select **OK** when prompted to prepare the floppy disk by ERASING it before copying data. Be sure the diskette does not contain critical data that is not available from another source.

If you are using a USB device, the system overwrites any existing backup files on the device.

DxC System Restoration

You can restore System Parameter and Alignment data from external media onto the system. Be aware that the Restore function does delete some or all files (depending on the areas restored) from the hard drive.

DxI Interlock Switches

The DxI analyzer is equipped with interlock switches to protect you from injury. If you open the covers of the instrument, the interlock switches stop all moving parts. If you open the covers while the intrument is processing samples, the system cancels all tests in progress.

Electrostatic Discharge (ESD)

To prevent damage due to electrical static discharge, always wear the wrist ground strap when directed in a procedure.

Environmental Conditions Precautions

Changes in ambient temperature and environmental conditions may result in a "reference drift" message. In this case, the electrolyte chemistries must be recalibrated.

Minimize laboratory temperature fluctuations as ISE recovery may drift from the time of calibration to the time the sample is tested. Reference the table below. Should your laboratory experience excessive temperature fluctuations, more frequent calibrations may be required.

Temperature Effect on Recovery After Calibration

Temperature effect on recovery after calibration	Sodium	Chloride	Potassium	CO_2	Calcium
Temperature increases after calibration	- 0.6 mmol/L per °C	- 0.4 mmol/L per °C	Not significant	- 0.5 mmol/L per °C	+ 0.06 mg/dL per °C
Temperature decreases after calibration	+ 0.6 mmol/L per °C	+0.4 mmol/L per °C	Not significant	+ 0.5 mmol/L per °C	- 0.06 mg/dL per °C

Exposed Working Surfaces

Use caution when you perform maintenance, service, or troubleshooting on the system near the UCTA load tray and DxC load area.

Fibrin Clots

Ensure samples are free of all visible fibrin. Clots can coat or plug the sample probes, flow cell, chemistry modules, EIC, or cuvette wash station, causing instrument malfunction or short sampling.

Installation Safety

This product is designed to be installed by a Beckman Coulter Field Service representative. Installation by anyone other than the authorized Beckman Coulter personnel invalidates any warranty covering the instrument.

ISE Reagent

Before you start any run, verify that the system has sufficient ISE reagent to complete the run. Operating the system with insufficient ISE reagent will cause erroneous assay results. In some cases, the system will report results without reagents.

MC Reagent Stir Bars

When you clean the MC reagent lines, cups, and stir bars, air accumulation in the lines may cause the stir bar to rise in the cup. Verify that the stir bar is positioned down into the bottom of the cup.

Narrow Margin Bar Codes

The sample bar code reader can read *narrow-margin bar codes*. Narrow-margin bar code labels must be high quality, and free from smudges, spots or other imperfections to insure accurate readings.

Patient Results

Patient results should be reviewed using delta checks. Note and question sequential abnormal results.

Printed Reports

Based on the system's units/precision setup, a result may be printed as either "high" or "low" even though the value on the report is within the defined limits. This is due to the rounding of results. For example, a potassium result of 5.14 mmol/L may be printed as 5.1 mmol/L in the "High" Result column in a patient report when its reference range is defined as 3.5 to 5.1 mmol/L. The potassium result of 5.14 mmol/L is greater than the upper reference range limit of 5.10 mmol/L but the value printed is rounded to 5.1 mmol/L due to the units/precision set up on the system.

Quality Control

Laboratory Quality Control practices should be commensurate with laboratory operation. Refer to assay Instructions for Use and CLIA '88 (update 1/24/2004 Section 493.1256).

Rack Replacement

Replace racks every five years. Do not use damaged racks on the system or in the SPINCHRON Centrifuge.

Radio Frequency Emmissions

The DxI analyzer generates, uses, and can radiate radio frequency energy. If the system is not installed and operated properly, this energy can cause interference with other equipment. In addition, other equipment can radiate radio frequency energy to which the DxI is sensitive.

If you suspect interference between the DxI and other equipment, Beckman Coulter suggests the following actions to correct the interference:

- Move the equipment so there is a greater distance between the equipment and the Integrated Workstation.
- Re-orient the equipment with respect to the Integrated Workstation.
- Be sure that the equipment is operating from a different power service connector than that of the Integrated Workstation.

Ratio Pump Quad-Ring Replacement

Be careful not to twist quad-rings or O-rings during installation, as this can result in reagent leakage or ratio pump failure.

Reagent Volume

Before you start any run, verify that the system has sufficient reagent to complete the run. Operating the system with insufficient reagent will cause erroneous test results. In some cases, the system will report results without reagents.

Do not handle MC reagent containers while the system is performing MC measurements.

Do not use expired reagents.

Residual Blood Contamination

Before you place closed tube samples on the system, check the top of the caps for any residual blood. Residual blood contamination in the sample can affect results. Remove blood with a cotton-tipped applicator stick moistened with DI water.

Sample Bar Code Reader

Do not tamper with or remove the housing of the Sample bar code reader.

Sample ID Reuse

If your LIS or normal workflow requires the reuse of sample IDs, you must clear the sample programming from the system before you reuse a sample ID. If you process two samples with the same sample ID, the new requests will be merged with tests from incomplete samples that previously used that ID.

Sample Integrity

To assure good sample integrity, review pre-analytical sample procedures with your nursing, phlebotomy and laboratory staff. Folow your tube manufacturer's handling procedures. Contact the sample tube manufacturer for educational materials and training.

Samples NOT received by Host (Laboratory Information System)

Do not clear samples until the results are received at the Host or printed. If you clear samples manually or through Host programming, results may be received at the Host and printed at the DxC without the sample ID. Depending on the Host implementation, you may lose sample results, or separate sample results may merge, creating duplicate tests or added tests.

Syringe Replacement

When you install syringes in the DxC analyzer, do not mix the two different syringe sizes. The MC and CC sample syringes (100 µL) are located on the back wall of the instrument. The CC reagent syringe (500 µL) is located on the right side of the instrument.

System Configuration Changes

Do not change the System Configuration Data except at the request or at the direction of Beckman Coulter, Inc. Incorrect information entry causes system errors.

System Errors

If the same error, such as a motion error, occurs repeatedly, refer to the instructions in the *Troubleshooting* chapter of this manual and the UniCel DxC Synchron Clinical Systems *Reference Manual*, or the DxI online help. If the error continues, contact your Beckman Coulter representative.

Transferring Information to or from External Media

When you use external media to transfer information to or from the DxC system, insure that only the media you intend to use is inserted in a drive. The DxC system searches first for a USB device,

then for a CD, and then for a diskette. When it finds a device, it stops searching, even if the device does not or cannot hold the information required. For example, if you have backup information on a diskette, but a CD is also inserted in the CD drive, the system cannot find the information on the diskette because it stops searching when it locates the CD, even if the CD does not contain the backup information.

When you export information from the DxC console to a USB device, you must transfer the information to a different PC. To view the alignment, system parameter, or QC archive files, you must copy the appropriate information from the storage PC and transfer it back to the DxC console.

When you download information to USB, the DxC system uses the same file names each time it downloads data. It will overwrite existing files on a USB device. To prevent overwriting the files on the storage PC, create a directory structure, for example:

- DxC QC Archive Data-Instrument Name
  - Date 1
  - Date 2
  - Date 3

Store the identically-named files under the individual dates.

NOTE Beckman Coulter recommends that you use a different USB device for each instrument. Do not alter any file name or content on files downloaded to USB devices. If a file or a file name is edited, the file cannot be uploaded to the instrument if it is needed later.

Urine Samples

After the system analyzes ten consecutive urine electrolytes, run one replicate of electrolytes on Synchron Aqua Cal 2 in the serum mode. This helps prevent chloride drift from the matrix effects of urine samples.

Symbols and Labels

Introduction

The following is a list of symbols and labels used on the UniCel Integrated Workstation. You will find them affixed to the appropriate components of the system, as described briefly below.

Primary Electrical Ground

This symbol identifies an electrical ground.

A_00044C.PNG

Keyboard Connection

This symbol identifies the connection between the computer and the keyboard.

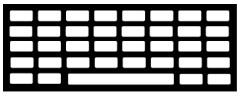

A010558L.PNG

Hold This Object Here

This black symbol, located on the bottom of each sample and reagent probe assembly, indicates the area to handle in order to rotate the probe.

A015097L.PNG

Do Not Hold This Object Here

This red symbol, located on the top of each sample and reagent probe assembly, indicates an area that should not be handled.

A015098L.PNG

High Voltage Electric Shock Risk

This symbol indicates high voltage is present or that there is a risk of electric shock when working in this area.

A_01374C.PNG

CAUTION

This symbol indicates a caution message and preceeds an explanation or other symbols that define the caution (see example below).

A_01361C.PNG

CAUTION Operate with All Covers in Place

This symbol is located on top of the work surface cover and the cover of the Cap Piercer. It indicates a caution to operate only with all covers in place to reduce risk of personal injury or biohazard. Failure to properly seat covers could lead to erroneous results.

A011459L.EPS

General Biohazard

This caution symbol indicates biohazardous risk from possible patient specimen contamination.

A011460L.PNG

Laser Bar Code Caution

A label reading, "CAUTION CLASS 2 LASER LIGHT WHEN OPEN. DO NOT STARE INTO BEAM" is placed near any opening through which a bar code reading beam emits. Do not stare into beam.

Sharp Objects Caution

This label, located on top of the cap piercing hardware and underneath the removable cover of the cap piercing tower, warns, "CAUTION. SHARP OBJECTS - REFER SERVICING AND MAINTENANCE TO QUALIFIED SERVICE PERSONNEL".

A012936L.PNG

ISE Cover Caution

This label, located on top of the ISE module frame and under the ISE cover, warns, "THE ISE COVER SHOULD REMAIN IN PLACE DURING SYSTEM OPERATION". Failure to properly seat covers could lead to erroneous results.

A012937L.PNG

Moving Parts Caution

This label, located inside the DxC offload track, on the left side of the back wall, warns, "CAUTION PARTS MOVE AUTOMATICALLY".

A015047L.PNG

MC Door Caution

This label, located on the top edge of the left hand (MC reagent) door on the DxC instrument, warns, "THIS DOOR SHOULD REMAIN CLOSED DURING SYSTEM OPERATION".

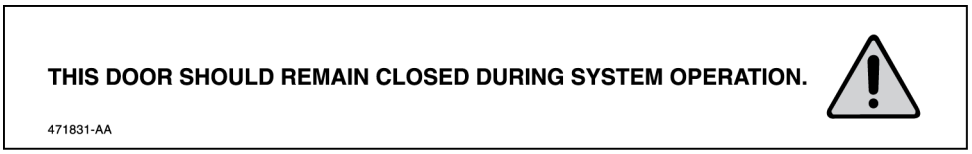

A012938L.PNG

Laser Certification Label

This label, located on the back, bottom edge of the DxC instrument, provides information about the laser.

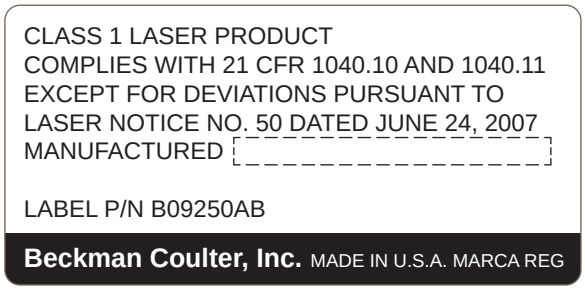

Read Manual Caution

This label, located on the hydropneumatics behind the center door of the DxC instrument, warns, "CAUTION - READ MANUAL BEFORE OPERATING".

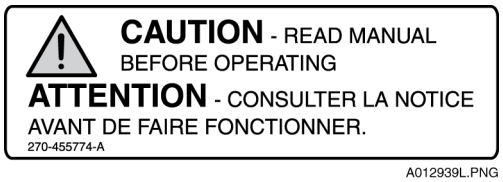

A012939L.PNG

Ethernet/Serial Port Label

This label, located on the right side of the DxC instrument, identifies connections for the Ethernet and serial ports.

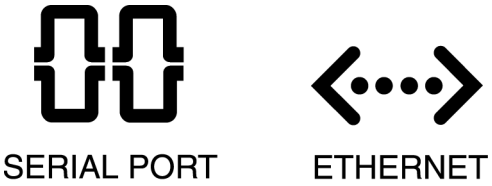

A012942L.PNG

Fluid Interface Label

This label, located on the center, back, bottom edge of the DxC instrument, identifies inlet and outlet ports on the system.

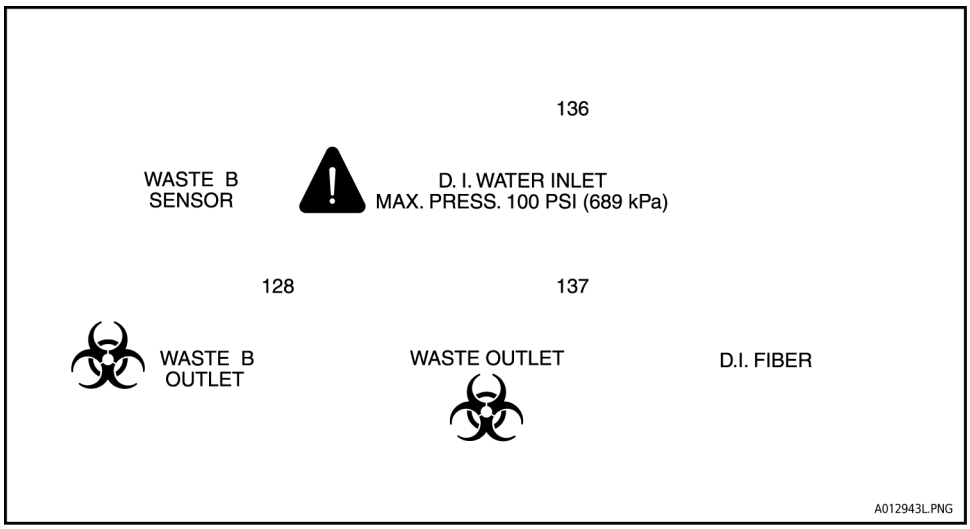

Recycling Label

This symbol is required in accordance with the Waste Electrical and Electronic Equipment (WEEE) Directive of the European Union. The presence of this marking on the product indicates:

1. the device was put on the European Market after August 13, 2005 and
2. the device is not to be disposed of via the municipal waste collection system of any member state of the European Union.

Customers must understand and follow all laws regarding the proper decontamination and safe disposal of electrical equipment. For Beckman Coulter products bearing this label, please contact your dealer or local Beckman Coulter office for details on the take-back program that facilitates the proper collection, treatment, recovery, recycling and safe disposal of these products.

Restriction of Hazardous Substances (RoHS) Labels

These labels and materials declaration table (the Table of Hazardous Susbtance's Name and Concentration) are to meet People's Republic of China Electronic Industry Standard SJ/T11364-2006 "Marking for Control of Pollution Caused by Electronic Information Products" requirements

RoHS Caution Label

This logo indicates that this electronic information product contains certain toxic or hazardous elements, and can be used safely during its environmental protection use period. The number in the middle of the logo indicates the environmental protection use period for the product. The outer circle indicates that the product can be recycled. The logo also signifies that the product should be recycled immediately after its environmental protection use period has expired. The date on the label indicates the date of manufacture.

RoHS Environmental Label

This logo indicates that the product does not contain any toxic or hazardous substances or elements. The "e" stands for electrical, electronic and environmental electronic information products. This logo indicates that this electronic information product does not contain any toxic or hazardous substances or elements, and is green and is environmental. The outer circle indicates that the product can be recycled. The logo also signifies that the product can be recycled after being discarded, and should not be casually discarded.

Documentation Symbols

Read all product manuals and consult with Beckman Coulter-trained personnel before attempting to operate instrument. Do not attempt to perform any procedure before carefully reading all instructions. Always follow product labeling and manufacturer's recommendations. If in doubt as to how to proceed in any situation, contact your Beckman Coulter representative.

Alerts for Warning, Caution, Important, and Note

⚠ WARNING

WARNING indicates a potentially hazardous situation which, if not avoided, could result in death or serious injury. May be used to indicate the possibility of erroneous data that could result in an incorrect diagnosis (does not apply to all products).

⚠ CAUTION

CAUTION indicates a potentially hazardous situation, which, if not avoided, may result in minor or moderate injury. It may also be used to alert against unsafe practices. May be used to indicate the possibility of erroneous data that could result in an incorrect diagnosis (does not apply to all products).

IMPORTANT IMPORTANT is used for comments that add value to the step or procedure being performed. Following the advice in the Important Notice adds benefit to the performance of a piece of equipment or to a process.

NOTE NOTE is used to call attention to notable information that should be followed during installation, use, or servicing of this equipment.

Contents

Revision History, iii

Safety Notice, vii

General Information, xxxvii

CHAPTER 1: System Description, 1-1

Introduction, 1-1
- DxC Analyzer, 1-2
- DxI Analyzer, 1-2
- UniCel CTA, 1-2

Integrated Workstation Sample Processing, 1-2

Component Analyzers, 1-4
- DxC Analyzer, 1-4
- DxI Analyzer, 1-6

CHAPTER 2: Software Description, 2-1

Introduction, 2-1

Integrated Workstation Main Screen, 2-1
- Common Screen Elements, 2-2
- Main Screen Elements, 2-8

DxI Main Menu, 2-13
- DxI Event Log, 2-13

Integrated Workstation Program Structure, 2-13

CHAPTER 3: Daily Start Up, 3-1

Introduction, 3-1

Start Up Procedure, 3-1

Clear Manually Assigned Racks, 3-2

Determine Integrated Workstation Supply and Calibration Status, 3-2

Replenish DxI Supplies and Reagents, 3-3

Perform DxI Daily Maintenance, 3-4

Replenish UCTA Supplies, 3-4

Replenish DxC Reagents, 3-5

Calibrate DxC Chemistries, 3-5

Calibrate DxI Assays, 3-6

Process Quality Control, 3-7

CHAPTER 4: Sample Programming and Processing, 4-1

Introduction, 4-1

Sample Processing Procedure, 4-2

Prepare Samples for Analysis, 4-2
- Check Sample Containers, 4-2
- Bar Code Labeling, 4-7

Prior to Programming, 4-8
- Rack Status, 4-8
- Identify Samples, 4-10

Program Samples, 4-11
- Samples with Host (LIS) Programming, 4-11
- Program Samples Manually, 4-12
- Add Tests or Rerun a Sample, 4-13

Additional Programming Information, 4-14
- DxI Communication, 4-14
- Chemistry Status, 4-15
- Sample Options, 4-15
- Batch Programming, 4-16

Process Samples, 4-18

Clear Samples, 4-18
- Introduction, 4-18
- Range of Sample IDs, 4-19
- Procedure for Clearing Samples, 4-19

Results Recall, 4-20
- Introduction, 4-20
- Limitations, 4-20
- Procedure for Recalling Results, 4-21
- Display Recalled Results, 4-22
- Edit Critical Rerun Result, 4-22
- Print Recalled Results, 4-23
- Send Results to the Host (LIS), 4-24
- Absorbance Versus Time, 4-25
- Statistical Summary Report, 4-26

CHAPTER 5: Quality Control, 5-1

Introduction, 5-1
- DxI Restrictions, 5-1

Process QC Procedure, 5-3

Define a Control, 5-3
- Introduction, 5-3
- Special or Unique Control Samples, 5-3
- Control Identifiers, 5-4
- Define a Control, 5-4
- Control ID Assignments, 5-5
- Edit a Control Definition, 5-6
- Modify Assigned Mean, Assigned SD or Constituent Code, 5-7
- Review a Control Definition, 5-9
- Print QC Ranges, 5-9
- Delete a Control, 5-10

Program QC, 5-10
- Auto Generation of Control, 5-10
- Manually Programming Control Samples, 5-11

Run Control Samples, 5-12
- Introduction, 5-12
- Run Control Samples With Bar Code Labels and Auto Generation of Control Enabled, 5-12

Manage Results, 5-13
- Introduction, 5-13
- QC File List, 5-13
- QC Summary, 5-14
- QC Chart (Levey-Jennings), 5-15
- QC Log, 5-16

Quality Assurance Program (QAP), 5-18
- QAP “Copy To External Media” Feature, 5-18

Archive Results, 5-20
- Archive QC, 5-20
- Review Archived Data, 5-21

CHAPTER 6: Supplies, 6-1

Overview, 6-1
- Workstation Console Rgts/Cal Screen, 6-1
- The Integrated Workstation Supply/Calibration Report, 6-2

DxI Supplies and Conditions, 6-2
- Overview, 6-2
- Rgts/Cal: Supplies Tab, DxI Supplies, 6-3
- Substrate, 6-7
- Wash Buffer, 6-13
- Reaction Vessels, 6-17
- Liquid Waste, 6-18
- Solid Waste, 6-21
- Rgts/Cal: DxI Tab Overview, 6-23

UCTA Supplies, 6-30

Rgts/Cal: Supplies Tab, UCTA Supplies, 6-30
Change the Wash Buffer at the UCTA Unit, 6-32
Change the Auto-Gloss Solution at the UCTA Unit, 6-34
Edit the Volume for the Auto-Gloss Solution at the UCTA Unit, 6-35

DxC Supplies and Reagents, 6-36
Reagent Load, 6-36
PreRun Checklist, 6-36
Rgts/Cal: DxC Tab Overview, 6-37
Sort Reagent Status, 6-38
Load/Unload Reagent, 6-39
Reagent Parameters, 6-49

CHAPTER 7: Calibration, 7-1

Introduction, 7-1

Load Calibrator from External Media, 7-2

Calibrator Assignment, 7-3

Calibration Status, 7-4
Introduction, 7-4
Calibration Status Messages, 7-4

Reagent and Calibration Status Warnings, 7-5
Introduction, 7-5
Conditions that Cause a Calibration Status Warning, 7-5

Request a Calibration, 7-5
Cancel a Calibration Request, 7-5

Calibration Failure Messages, 7-6
Introduction, 7-6
CC Subsystem Calibration Failure, 7-6
MC Subsystem Calibration Failure, 7-6

Within Lot Calibration, 7-7
Introduction, 7-7
Within Lot Calibration Frequency, 7-7
Enable Within Lot Calibration, 7-7
Within Lot Calibration Status Screen, 7-8
Within Lot Designations, 7-9
Within Lot Calibration Limitations, 7-10

Enzyme Validator, 7-11
Introduction, 7-11

Calibration Override, 7-12
Introduction, 7-12
Override a Calibration, 7-12
Remove Cal Overridden Status, 7-12

Chemistry Bypass, 7-13
Introduction, 7-13
Bypass a Chemistry, 7-13

Remove a Bypassed Status, 7-13

Extend Calibration Time, 7-14
Introduction, 7-14
Extend Calibration Time, 7-14
Remove an Extended Status, 7-14

Calibration Acceptance Limits, 7-15
Introduction, 7-15
View Calibrator Acceptance Limits, 7-15

Calibrator Set Point Modifications, 7-16
Introduction, 7-16
Modify Calibrator Set Points, 7-16

Slope/Offset Adjustment, 7-17
Introduction, 7-17
Slope/Offset Recommendations, 7-17

Reprint Calibration Reports, 7-18
Introduction, 7-18
Reprint Current Calibration Reports, 7-18
Reprint Previous Calibration Reports, 7-19

Archive Calibration , 7-20
Introduction, 7-20
Archive Calibration Reports, 7-20

CHAPTER 8: System Status, Instrument Commands, and Utilities, 8-1

Overview, 8-1

System Status, 8-1
Introduction, 8-1
Show Status Summary, 8-1
Possible Status Messages, 8-2
Return to Status Summary, 8-2
Status-Cycle Count, 8-2
Temperatures, 8-3
Power Subsystems, 8-4
Hydropneumatics Subsystem, 8-5
Cuvette Water Blank Status, 8-5
ICS/Smart Modules, 8-6
CTS Tracking, 8-6

Instrument Commands, 8-7
Commands, 8-7
Home, 8-8
Pause, 8-9
Stop Print, 8-10
Pause/Resume Waste B, 8-11
Enable/Disable Modules, 8-11
Unload All, 8-13
System Shutdown/Restart, 8-14

Utilities, 8-19
Prime, 8-20
Maintenance, 8-25
Event Log, 8-25
Alignment/Diagnostics/PVTs, 8-30
Metering, 8-31
Modem, 8-31
Backup/Restore, 8-31
Touch Screen Calibration, 8-35

CHAPTER 9: Independent Mode, 9-1

Introduction, 9-1

Independent Operating Modes, 9-1
UCTA is Non-operational, 9-1
DxI is Non-operational, 9-4
DxC is Non-operational (Chemistry Analytical Unit & Console), 9-5
DxC is Non-operational (Chemistry Analytical Unit Only), 9-7

DxC Sample Handling System, 9-9
DxC Load Area/Offload Track, 9-9
Priority Load Position, 9-9
Priority Load Button, 9-10
Pushers, 9-10
Sample Gate, 9-10

Sample Preparation by Container Type, 9-10

CHAPTER 10: System Setup, 10-1

Introduction, 10-1

System Setup Screen, 10-1
Introduction, 10-1
Auto Serum Index/ORDAC, 10-3
Setting the Default Sample Type, 10-4
Date/Time, 10-4
Demographics Setup, 10-5
Patient Results – Immediate Reporting Setup, 10-6
Panels, 10-7
Replicates, 10-8
Report Setup, 10-8
Reportable Ranges Setup, 10-9
Reference/Critical Ranges, 10-11
Sample Comments Setup, 10-12
Special Calculations Definition, 10-12
Version Information, 10-13
Units/Precision Setup, 10-13
User Defined Chemistries Setup, 10-13
Bar Code Setup, 10-14
Maximum Sample Program Age, 10-14
Reserved Rack Setup, 10-15

Host Communications, 10-15
Language/Keyboard Setup, 10-16
Printer Setup, 10-17
System Configuration, 10-17
Version Upgrade, 10-17
Status Alarm/Annunciator, 10-18
Chemistry Update, 10-18
Password Setup, 10-18
Auto Generation of Control, 10-20
DxI Priority/Reflex Test Setup, 10-20
UCTA Setup, 10-22

Configure the Chemistry Menu, 10-23
Introduction, 10-23
Configure a Beckman Coulter Chemistry, 10-23
Define Chemistry Print Name, 10-24
Insert a Chemistry, 10-24
Delete a Chemistry, 10-24

User-Defined Reagents, 10-27
Requirements and Precautions, 10-28
User-Defined Reagent Setup, 10-29
Chemistry Parameters, 10-30
Processing Parameters, 10-34
Error Detection Limits, 10-39
Wavelength Selection, 10-41
Determination of Extinction Coefficients, 10-42
Exit Check Criteria, 10-43
User Defined Reagent Removal, 10-45
Expanded User Defined Chemistry Feature, 10-46

CHAPTER 11: System Reference, 11-1

Introduction, 11-1

Intended Use, 11-1

Operational Conditions, 11-2
Shipping Damage, 11-2
Installation, 11-2
Clearances, 11-2
Sunlight and Drafts, 11-2
Drain, 11-3
Power Requirements, 11-3
Environmental Conditions, 11-5
Water Requirements, 11-5
Other System Specifications for IEC-1010 Compliance, 11-6

Theory of Operation, 11-6

Cartridge Chemistry: Calibration Theory, 11-8
Introduction, 11-8
Endpoint and First-Order Chemistries, 11-8

Endpoint and First-Order Calibration Formulas, 11-8
Non-Linear Chemistries, 11-14
Non-Linear Calibration Formulas, 11-14
Drugs of Abuse Testing (DAT) Chemistries, 11-17
Enzyme Verification, 11-17

Modular Chemistry: Calibration Theory, 11-17
Calibration Theory, 11-17
Calibration Error Detection, 11-17

DxI Immunoassay Calibration Theory, 11-17

Cartridge Chemistry: Principles of Measurement, 11-18
Spectrophotometric Methods, 11-18
Beer's Law, 11-18

System Component Reference, 11-18
DxC Systems, 11-18

Sample Handling Components, 11-19
Introduction, 11-19
DxC Bar Code Reader (Sample), 11-20
1-Blade Thick CTS (Closed Tube Sampling) or 1-Blade Narrow CTS Cap Piercer Assembly , 11-20
Sample Carousel, 11-21

Modular Chemistry (MC) System, 11-22
Introduction, 11-22
Reagent Storage Area, 11-22
Reagent Bar Code Reader (Modular), 11-23
Ratio Pump, 11-23
Electrolyte Injection Cup (EIC), 11-24
Flow Cell Assembly, 11-25
Chemistry Reaction Modules (Basic Components), 11-26

Cartridge Chemistry (CC) Reagent Handling System, 11-26
Introduction, 11-26
Reagent Cartridges, 11-27
Reagent Carousel and Reagent Bar Code Readers, 11-27
Reagent Probe Assembly, 11-28
Reagent Mixer Assembly, 11-29
Reagent Mixer Wash Cup, 11-29

Cuvette Reaction System, 11-29
Introduction, 11-29
Reaction Carousel, 11-29
Photometer Assembly, 11-30
LPIA (Large Particle Immuno Assay), 11-30
Cuvette Wash Station, 11-31

Hydropneumatic System, 11-32
Introduction, 11-32
Function, 11-33

UCTA (UniCel Closed Tube Aliquotter), 11-34

Operator Control Devices, 11-36
Control Buttons, 11-38

Rack ID Labels, 11-40

System Monitoring, 11-41
Test Result Errors, 11-41
Error Codes, 11-41
DxI Codes Converted to DxC Codes for Integrated Workstation Reporting, 11-41
Test Reports, 11-42

CHAPTER 12: Maintenance, 12-1

Introduction, 12-1
Basic Laboratory Practice, 12-1
Electronic Scheduled Maintenance Log, 12-2

General Instructions, 12-8

Daily Maintenance, 12-8
Back Up DxI, 12-8
Shake the DxI Solid Waste Container, 12-10
Run DxI Clean Routine, 12-10
Prime the Fluidics, 12-13

Twice Weekly Maintenance, 12-15
Clean Flow Cell (Automated), 12-15

Weekly Maintenance, 12-16
Check Reagent Levels, 12-16
Replace Cuvette Wiper, 12-17
Clean ALBm & TPm Cup Modules (DxC 800 only) , 12-19
Clean Probes (Exterior), 12-20
Clean Flow Cell, Cups and CC Probes/Mixers (Automated), 12-22
Check Chloride Calibration Span, 12-24
Check Syringe Tightness, 12-24
Install Clean DxI Aspirate Probes, 12-25

Twice Monthly Maintenance, 12-26
Clean the UCTA Aliquot and Piercer Probes, 12-26

Monthly Maintenance, 12-27
Replace Alkaline Buffer, 12-27
Adjust the Fluid Level of the Alkaline Buffer Damper Assembly, 12-31
Clean All Cup Modules, 12-34
Clean Mixers, 12-35
Calibrate Lamps and Sensor, 12-36
BUNm/UREAm Electrode Maintenance (DxC 800 Only), 12-37
Replace CTS Blade (1-Blade Narrow CTS Option), 12-43
Clean Chloride Electrode Tip and Flow Cell Port, 12-47

Two-Month Maintenance, 12-51
Replace CTS Blade/Wick (1-Blade Thick CTS Option), 12-51

Change/Clean DxC Air Filters, 12-55

Three-Month Maintenance, 12-57
Replace 500 µL Reagent Syringe Plunger, 12-57

Four-Month Maintenance, 12-62
Clean the MC Reagent Lines, 12-62

Other: Six-Month Maintenance, 12-67
Replace Calcium and Potassium Electrode Tips, 12-67
Replace Glucose Sensor, 12-73
Replace 100 µL Sample Syringes, 12-79

Other: Yearly Maintenance, 12-82
Replace the UCTA Aliquot Probes, 12-82
UCTA Carryover PVT Procedure, 12-89
Replace the UCTA Piercer Probes, 12-91
Replace UCTA Drain Pump Tubing, 12-94
Replace UCTA Sample and Wash Station Syringes, 12-98

Other: 5,000 Test Interval Maintenance, 12-101
Replace DxI Duck Bill Valve, 12-101
Initialize the DxI System, 12-109
Verify DxI System Performance, 12-110

Other: 10,000 Test Interval Maintenance, 12-110
Install Clean DxI Aspirate Probes, 12-111
Clean the Aspirate Probes, 12-121
Remove and Inspect DxI Dispense Probes, 12-124
Check DxI Pump Fittings - Wash Buffer Reservoir, 12-131
Check DxI Upper Aspirate Peri-Pump Fittings, 12-134
Check DxI Reagent Pipettors and Clean Wash Towers, 12-136
Check DxI for Fallen RVs, 12-139
Check DxI Liquid Waste Drawer, 12-141
Check DxI Wash Buffer Supply Drawer, 12-143
Clean DxI Air Filter, 12-144

As-Needed/As-Required Maintenance, 12-146
Introduction, 12-147
Action Log, 12-147
CC Probes Cleaning (Manual Program), 12-147
Replace the Chloride Electrode Tip, 12-149
Replace the Sodium Measuring/Reference Electrode, 12-152
Replace the BUNm/UREAm Electrode (DxC 800 Only), 12-158
Replace the CO2 Membrane, 12-167
Clean the EIC Port, 12-174
Clean the CO2 Alkaline Buffer Lines, 12-181
Clean the ISE Drain, 12-184
Flush the Flow Cell (Manual), 12-187
Flush the Sample and Reagent Probe, 12-190
Replace the Sample and Reagent Probe, 12-192
Clean the CC Sample Probe, Reagent Probes and Mixers, 12-196
Clean the MC Sample Probe Collar Wash Assembly, 12-196

Clean the Precipitate in PHOSm (DxC 800 Only), 12-198
Inspect the Cuvette Washer Probes, 12-199
Wash All Cuvettes With System Wash, 12-201
Wash the CC Reagent Cuvettes with CCWA, 12-202
Clean the Work Surfaces, 12-203
Decontaminate the Sample Racks, 12-204
Decontaminate the DxC Instrument, 12-204
Replace the CTS Wick, 12-208
Replace ISE Drain Pump Tube, 12-216
Replace the UCTA Pick and Place Head, 12-218
Clean the UCTA Left/Right Sample and Wash Syringes, 12-223
Flush the UCTA Left/Right Aliquot Probes, 12-224
UCTA Accuracy PVT Procedure, 12-226
Obstruction Detection and Correction (ODC), 12-229
Clean UCTA Waste Sump Exterior, 12-231
ISE Service, 12-232

CHAPTER 13: Troubleshooting Calibration and Result Errors, 13-1

Calibration Errors, 13-1
- Introduction, 13-1
- Calibration Error Checking, 13-1
- Calibration Error Flags, 13-1

MC Calibration, 13-2
- Overview, 13-2
- MC Calibration Checks, 13-2
- Back-to-Back, 13-2
- Calibrator Range (High/Low), 13-3
- DAC, 13-3
- Sample/Reference Deviation, 13-4
- Span, 13-4
- Calibration Reports, 13-4

Linear Calibration, 13-6
- Overview, 13-6
- Back-to-Back, 13-7
- Calibrator Range (High/Low), 13-7
- Span, 13-7
- Linear Calibration Report, 13-7

Non-Linear and Multipoint Calibrations, 13-9
- Overview, 13-9
- Non-Linear Calibration Checks, 13-10
- Multipoint Span, 13-10
- Recovery, 13-10
- Severe Recovery, 13-10
- Sensitivity, 13-10
- Severe Sensitivity, 13-10
- Math Errors, 13-10
- Calibration Report, 13-11

Troubleshooting Result Errors, 13-13
Result Errors, 13-13

Error Codes and Definitions, 13-14
Result Errors and Codes, 13-14

Error Code – Definitions, 13-17

Common Error Messages and Corrective Actions, 13-23
Online Manual Links, 13-23

Index

Related Documents

General Information

Scope of Manual

This manual covers basic operating instructions and maintenance guidelines for the UniCel DxC Synchron Access Clinical System Integrated Workstation. It does not include detailed operation, maintenance, and troubleshooting instructions. It does not discuss medical and diagnostic interpretation, or the clinical significance of chemistries or assays. See the reference materials in the Related Documents section for detailed information.

This manual is intended for medical laboratory personnel using the UniCel Integrated Workstation.

How to Use this Manual Online

Press the Help icon ? on the DxC menu bar to display the Integrated Workstation *Instructions For Use* manual.

To display the manual while a pop-up window is on the screen, press ALT + F1 .

Online Manual Links

The system may display an "Error -- The page cannot be displayed" pop-up message when you select the **Event ID** button to link to the online manual from an instrument pop-up error message, or when you select a link in the online manual. To continue, record the Event ID, select **OK** from the Error pop-up message, and then use the search feature of the online manual to find the topic you were seeking.

NOTE To view the instrument pop-up error Event ID number, use the Alt + F1 key combination to returrn to the the instrument screen.

DxI Online Help Feature

The DxI analyzer includes an online help feature with operating, maintenance, troubleshooting, and diagnostics information. Not all DxI online help topics are applicable to the UniCel Integrated Workstation.

To display the DxI online help, press the Help icon ? on the DxI menu bar at the DxI console.

Alerts for Warning, Caution, Important, and Note

⚠ WARNING

WARNING indicates a potentially hazardous situation, which, if not avoided, could result in death or serious injury. It may be used to indicate the possibility of erroneous data that could result in an incorrect diagnosis.

⚠ CAUTION

CAUTION indicates a potentially hazardous situation, which, if not avoided, may result in minor or moderate injury. It may also be used to alert against unsafe practices, or to indicate the possibility of erroneous data that could result in an incorrect diagnosis.

IMPORTANT IMPORTANT indicates comments that add value to the step or procedure being performed. Follow the advice in the Important Notice to add benefit to the performance of a piece of equipment or to a process.

NOTE NOTE calls attention to notable information to follow when you install, use, or service this equipment.

CHAPTER 1

System Description

Introduction

The series of UniCel DxC Integrated Workstations combine a DxC 600 or 800 analyzer, a DxI 600 or 800 analyzer, and a UniCel CTA (Closed Tube Aliquotter) into a single integrated system. These combinations can be customized for individual laboratory requirements as follows:

- DxC 660i--A DxC 600 + UCTA + DxI 600
- DxC 680i--A DxC 600 + UCTA + DxI 800
- DxC 860i--A DxC 800 + UCTA + DxI 600
- DxC 880i--A DxC 800 + UCTA + DxI 800

Figure 1.1 UniCel Integrated Workstation (DxC 880i shown)

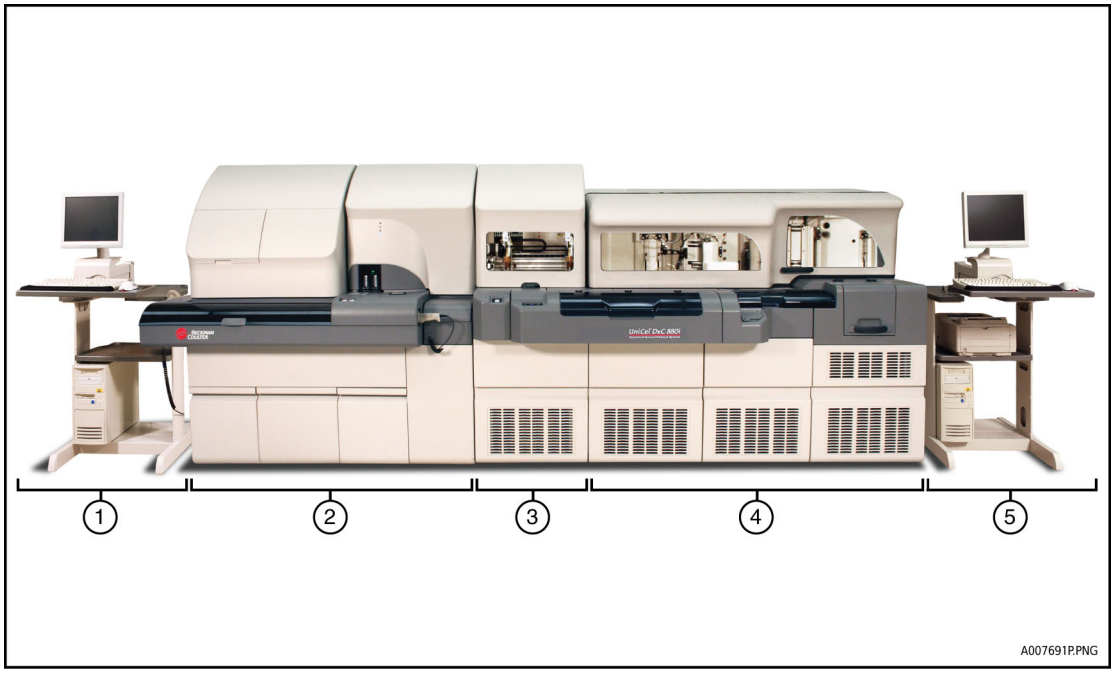

1. DxI console
2. DxI
3. UniCel CTA
4. DxC
5. Workstation console

DxC Analyzer

The DxC analyzer performs in vitro determination of a variety of general chemistries, therapeutic drugs, proteins, and other chemistries.

DxI Analyzer

The DxI analyzer is an automated system that performs a wide variety of immunoassays on body fluid samples.

UniCel CTA

The UniCel CTA eliminates uncapping and recapping from sample processing. It serves as a single point of entry for the Integrated Workstation.

The UniCel CTA is a sample aliquotter which first reads the sample ID for each sample container, creates an aliquot if the sample requires DxI processing, then transfers the sample container to the DxC for any further processing.

The UniCel CTA contains a sample rack shuttle, sample carousel, laser bar code reader, two aliquot probes and two piercer probes and two wash stations. It is self-contained and houses all electronics, hydroneumatics and fluid-handling utilities.

Integrated Workstation Sample Processing

Figure 1.2 UniCel Integrated Workstation Sample Processing

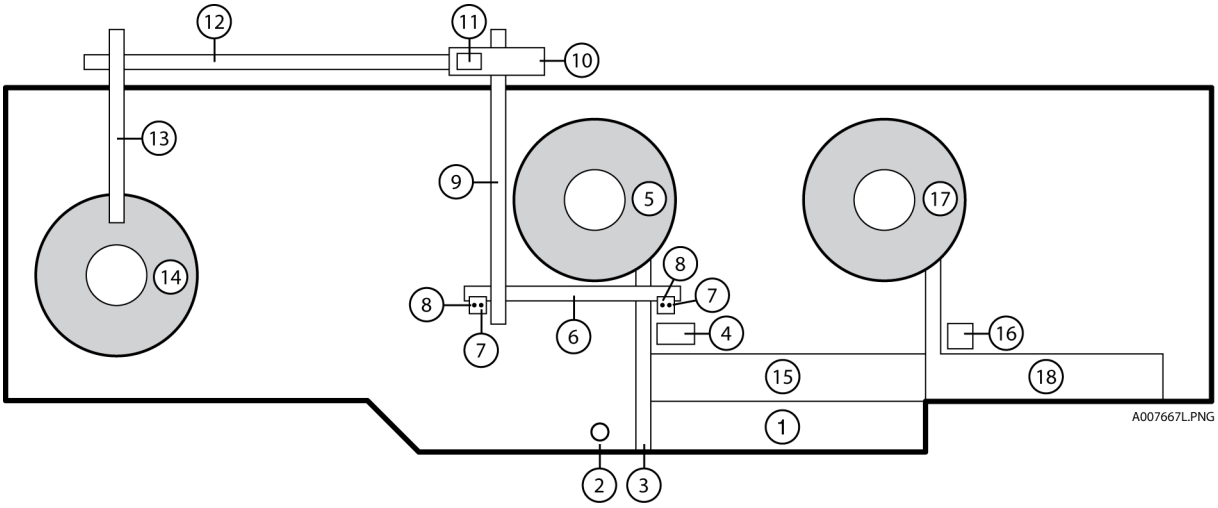

1. UCTA Load Tray
2. UCTA Run Button
3. UCTA Sample Rack Shuttle
4. UCTA Bar Code Reader
5. UCTA Sample Carousel
6. UCTA Dual Carriage Gantry
7. UCTA Piercer Probes
8. UCTA Aliquot Probes
9. UCTA SV Shuttle
10. UCTA Pick and Place
11. UCTA SV Nest
12. UCTA Transfer Shuttle
13. DxI Pick and Place
14. DxI Sample Storage
15. DxC Load Area
16. DxC Bar Code Reader
17. DxC Sample Carousel
18. DxC Off-load Area

To process a sample

- Place the sample in an appropriate sample rack. (See Table 4.2.)
- Load the sample rack in the UCTA load tray (1).
- Press the RUN button (2).
- The UCTA load pusher moves the sample rack to the UCTA shuttle (3).
- The UCTA shuttle moves the sample rack in front of the UCTA bar code reader (4) and into the UCTA sample carousel (5). The Integrated Workstation queries the Host for programming.
- ***If the sample must be tested at the DxI analyzer:***
  - The sample carousel moves the sample rack back under the UCTA dual carriage gantry (6).
  - One of the lubricated piercer probes (7) pierces the sample cap.
  - One of the aliquot probes (8) aspirates an aliquot of the sample, and dispenses it to a sample vessel (SV) in the SV shuttle (9).
  - The SV shuttle moves the SV back to the UCTA PnP (Pick and Place) (10).
  - The UCTA PnP transfers the SV to the SV nest (11).
  - The UCTA transfer shuttle (12) moves into position and the UCTA PnP moves the SV to the transfer shuttle.
  - The transfer shuttle moves the SV to the DxI PnP (13).
  - The DxI PnP moves the SV to DxI Sample Storage (14).
  - DxI analysis begins. See the DxI Analyzer section for more information.
- The UCTA shuttle moves the sample rack to the DxC load area (15).
- ***If the sample must be tested at the DxC analyzer:***
  - The DxC shuttle moves the sample rack past the DxC bar code reader (16).
  - The CTS (Closed Tube Sampling) assembly pierces the cap of the sample tube.
  - The DxC shuttle moves the sample rack into the DxC sample carousel (17).
  - DxC analysis begins. See the DxC Analyzer section for more information.
- The DxC shuttle moves the sample rack to the off-load area (18).

You can view the test status from the workstation console while the system is operating, and you can generate a report from each analyzer after processing is complete.

Component Analyzers

DxC Analyzer

Figure 1.3 UniCel DxC Analyzer (DxC 800 shown)

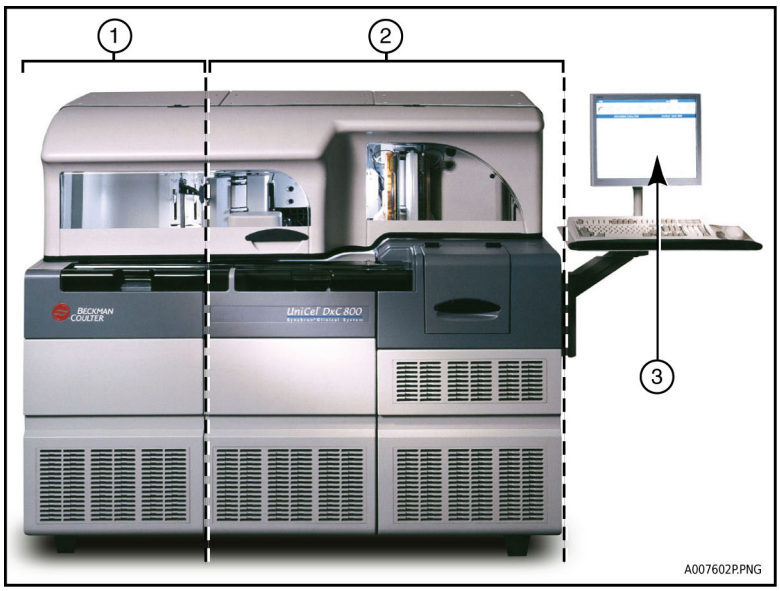

1. MC (Modular Chemistry) Section
2. CC (Cartridge Chemistry) Section
3. Workstation console

The DxC analyzer can process a wide variety of chemistries in a single run. It includes an MC (modular chemistry) section (1) and a CC (cartridge chemistry) section (2). The workstation console (3) controls basic operating functions for the Integrated Workstation.

Modular Chemistries (MC)

The MC section contains seven chemistry modules that determine eleven modular chemistries as follows.

Table 1.1 Methodology and Modules Used with Modular Chemistries

Chemistry	Methodology	Module
Sodium	ISE (Ion selective electrode)	ISE Flow cell
Potassium	ISE	ISE Flow cell
Chloride	ISE	ISE Flow cell
Carbon Dioxide	pH electrode	ISE Flow cell
Calcium	ISE	ISE Flow cell
Urea Nitrogen[a]	Conductivity electrode	Urea Nitrogen
Phosphorus[a]	Colorimetric	Phosphorus

Table 1.1 Methodology and Modules Used with Modular Chemistries *(Continued)*

Chemistry	Methodology	Module
Creatinine[a]	Colorimetric	Creatinine
Glucose	Oxygen sensor	Glucose
Total Protein[a]	Colorimetric	Total Protein
Albumin[a]	Colorimetric	Albumin

a. DxC 800 only

Cartridge Chemistries (CC)

The CC section performs optical rate, endpoint, and nonlinear analyses simultaneously. The reagents required for these analyses are stored in cartridges.

DxC Analyzer Sample Processing

Figure 1.4 DxC Analyzer Sample Processing (DxC 800 shown)

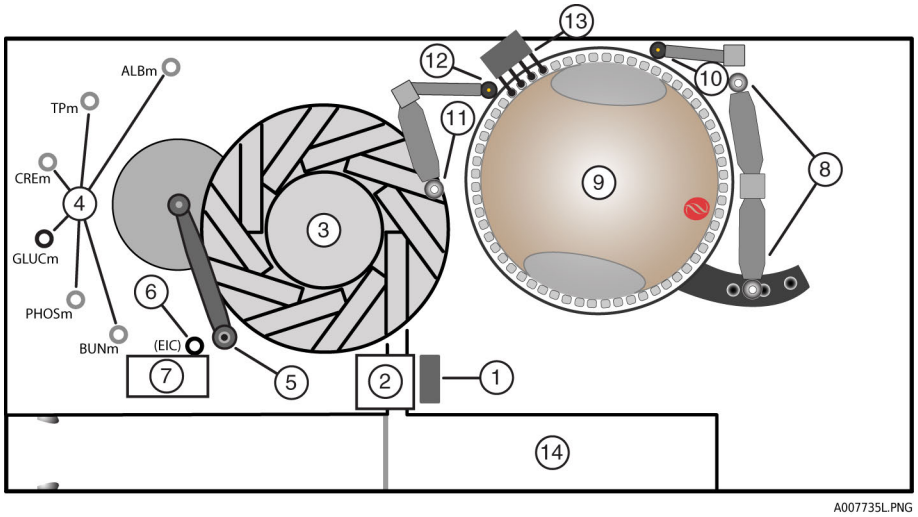

1. DxC Bar Code Reader
2. CTS (Closed Tube Sampling)
3. Sample Carousel
4. Reaction Cups (DxC 600 includes GLUCm only)
5. MC Sample Probe
6. EIC (Electrolyte Injection Cup)
7. ISE Flow Cell
8. CC Reagent Probes
9. Reaction Carousel
10. Reagent Mixer
11. CC Sample Probe
12. Sample Mixer
13. Cuvette Wash Station
14. DxC Off-load Area

To process a sample:

- The DxC shuttle moves the sample rack past the DxC bar code reader (1).
- The CTS (2) pierces the cap of the sample tube.
- The shuttle loads the rack onto the sample carousel (3).
- ***If the sample requires MC testing:***
  - The analyzer fills the reaction cups (4) with reagent. (The DxC 600 includes GLUCm only.)
  - The MC sample probe (5) aspirates and dispenses sample into the reaction cups and the EIC (Electrolyte Injection Cup)(6), as required.
  - The stir bars in the reaction cups spin to mix the sample and reagents. The analyzer records the reactions.
  - The analyzer drains and rinses the reaction cups.
  - The analyzer dilutes and buffers the sample in the EIC, then pumps it past the electrodes in the ISE flow cell (7).
  - The electrodes measure electrical signals that are converted to concentration.
- ***If the sample requires CC testing:***
  - The CC reagent probes (8) aspirate and dispense reagents into a reaction cuvette on the reaction carousel (9).
  - The reaction carousel spins 2 1/2 revolutions plus one cuvette in between each step to advance the cuvettes.
  - The reagent mixer (10) mixes the reagent in the cuvette.
  - The CC sample probe (11) aspirates and dispenses sample into the cuvette.
  - The sample mixer (12) mixes sample and reagent in the cuvette.
  - The analyzer records the reaction as the reaction carousel spins.
  - The cuvette wash station (13) drains, washes, rinses and dries the cuvette.
- The DxC shuttle moves the sample rack to the off-load area (14).

DxI Analyzer

The DxI analyzer provides continuous, random-access immunoassay processing. The DxI software includes a complete Help system of detailed operating and reference information that is not duplicated in this manual.

To display the DxI Help, press the Help icon ? on any screen on the DxI console.

When the DxI analyzer is operating as part of the Integrated Workstation, the following functions are not available (grayed out) at the DxI console.

Table 1.2 DxI Function Limits

From DxI Main Menu	Not Available With Integrated Workstation
Diagnostics	• LIS/LAS
Configure	• Bar Code Reader Setup, except for Read Sample IDs • Set WorkGroup Date/Time • Password Setup • Reports Setup/Report Header Information--the first four fields • Rack ID Setup--view only • Tests/Edit Units • Tests/Enable/Disable Tests • Tests/Gray Zone--view only • Tests/Ranges/LIS Range • Tests/Test ID • Tests/Default Sample Type • Derived Results • LIS/LAS • System Setup/Language • Filter/Expired Controls • Filter/Non-Expired Controls
Quality Control	• QC Setup/Edit Control, except for Designate Pipettor • Review Chart and Data • Compare Charts • Delete Comparison • Print

DxI Analyzer Sample Processing

Figure 1.5 DxI Analyzer Sample Processing (DxI 800 shown)

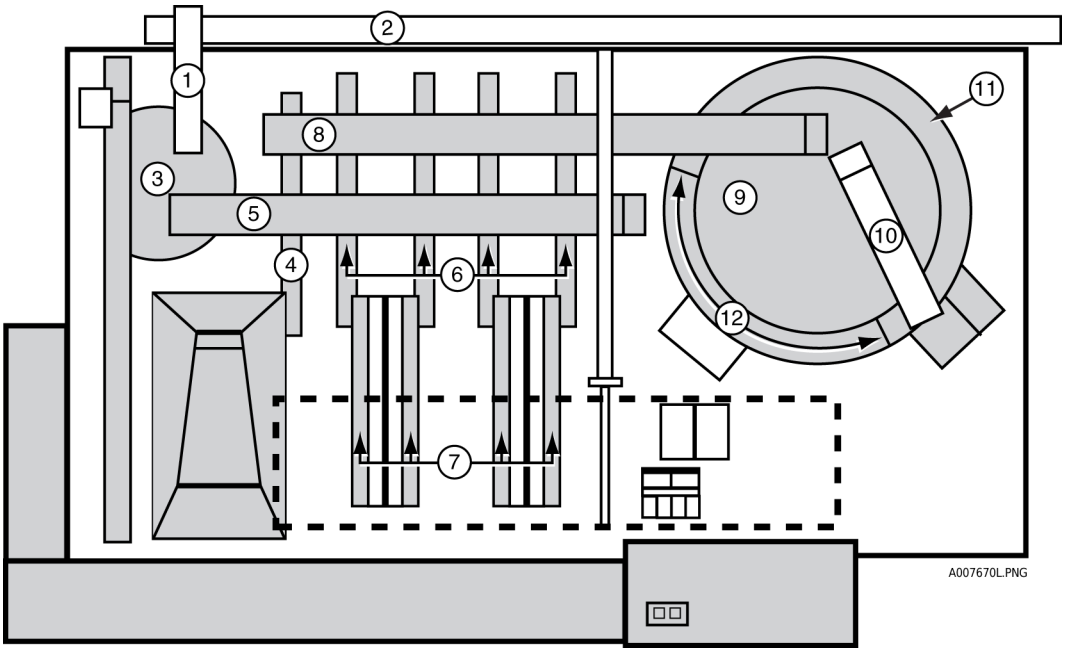

1. DxI Pick and Place
2. UCTA Transfer Shuttle
3. DxI Sample Storage
4. Supply Carriage
5. Sample Pick and Place
6. Reagent Carriages (DxI 600 includes two only)
7. Reagent Pipettor (DxI 600 includes two only)
8. Incubator Pick and Place
9. Analytical Module
10. Wash Pick and Place
11. Wash Carousel
12. Wash Arm

To process a sample:

- The DxI PnP (Pick and Place) (1) moves Sample Vessel (SV) from the UCTA transfer shuttle (2) to DxI Sample Storage (3).
- The Supply Carriage (4) moves an empty vessel to the Sample PnP (5).
- The Sample PnP moves the vessel to one of the four Reagent Carriages (6) for use as a Reaction Vessel (RV). (The DxI 600 includes only two Reagent Carriages.)
- The Sample PnP then moves the SV with the sample aliquot to the same Reagent Carriage.
- The system moves the Reagent Carriage and the correct reagent pack into position at the Reagent Pipettor (7). (The DxI 600 includes only two Reagent Pipettors.)
- The Reagent Pipettor transfers sample from the SV to the empty RV, then adds the required reagent components and mixes the sample and reagents.
- The Reagent Carriage moves the RV to the Incubator PnP (8), which moves it to the Analytical Module (9) for incubation.
- If required, the Sample PnP returns the SV to Sample Storage.
- Some assays (“two-step” assays) require that the RV return to the Reagent Pipettor for additional reagent, and then move back to the Analytical Module to incubate a second time.
- When incubation is complete, the Wash PnP (10) moves the RV to the Wash Carousel (11).
- The Wash Arm (12) washes the RV three times and adds substrate to the RV.

- When incubation is complete, the Luminometer reads the RLU (relative light unit) values.
- The Wash PnP moves the used RV to the Analytical Module.
- The Incubator PnP moves the used RV to waste.
- The Sample PnP moves the SV to waste when it is no longer needed.

CHAPTER 2

Software Description

Introduction

The UniCel Integrated Workstation system software consists of two real-time operating systems: one controls the DxI analyzer only, and the other controls the DxC analyzer, the UniCel CTA, and many of the Integrated Workstation functions. Each has a PC-based user interface (UI). You will perform most of your work at the workstation console.

Integrated Workstation Main Screen

Figure 2.1 Integrated Workstation Main Screen (DxC 880i screens shown throughout)

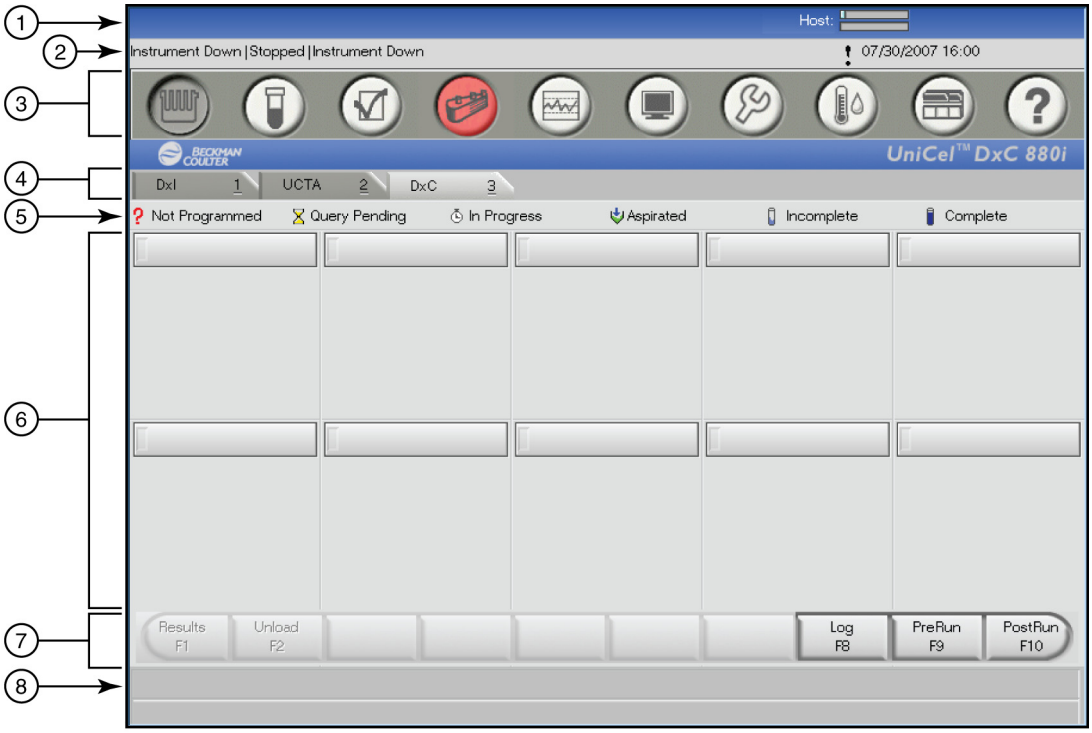

E007642S.PNG

1. Communication Line
2. Status Line
3. Menu Bar
4. Sample Status Tabs
5. Sample Status Icons
6. Rack Status Area (DxC tab)
7. Function Bar
8. Message Line

The main screen of the Integrated Workstation system displays the sample status for all samples loaded on the system. This screen includes elements common to all Integrated Workstation screens as well as sections specific to sample status.

Common Screen Elements

Communication Line

Figure 2.2 Communication Line on the Integrated Workstation Main Screen

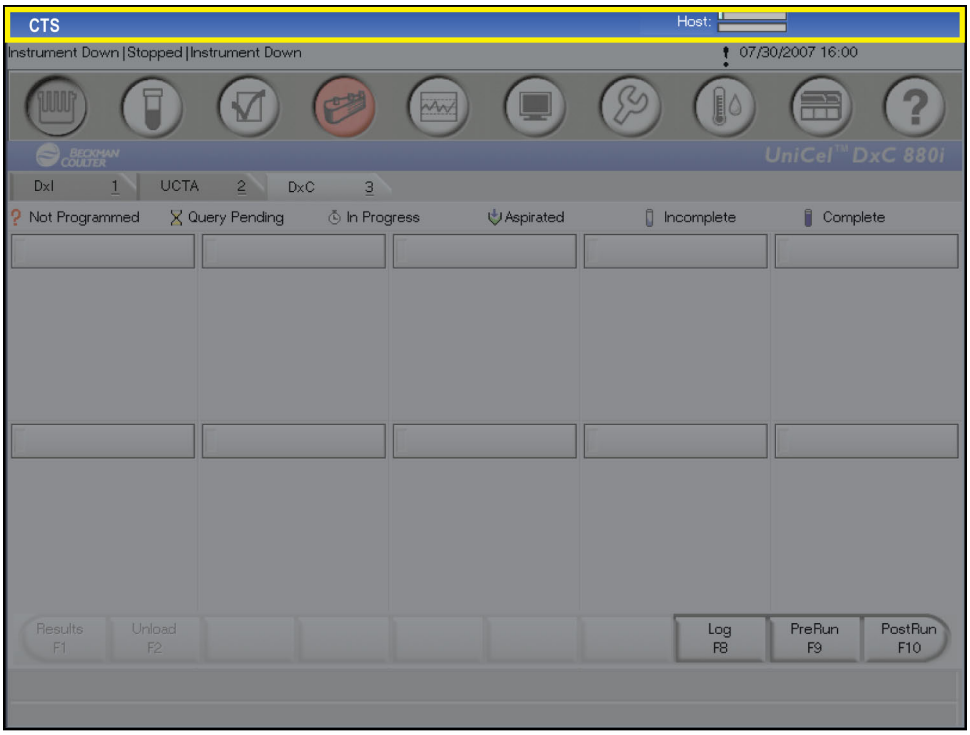

E007643S.PNG

The Communication Line shows status information for the DxC, CTS, and communication with the Host (Laboratory Information System).

Table 2.1 Communication Line Functions

Status Indicator	Status Description
CTS	**CTS Indicator** This indicator appears on the left side of the communication line when the CTS [1-Blade Thick CTS (Closed Tube Sampling) or 1-Blade Narrow CTS Cap Piercer Assembly] is enabled. If CTS appears within the international "No" symbol ( ), the CTS is not enabled. To enable Closed Tube Sampling, refer to Enable/Disable CTS in CHAPTER 11, *System Reference*.
1 Minute(s) to CC Reagent Load	**Reagent Load Status** This indicator appears in the middle of the communication line during the waiting period before a reagent can be loaded on the DxC.
Host:	**Host Communication Status** This indicator appears on the right side of the communication line. A blue bar indicates that the Host is sending information to the Integrated Workstation. A green bar indicates that the Host is receiving information from the Integrated Workstation. If the status appears within the international “No” symbol, the Host and the Integrated Workstation are not communicating.

Status Line

Figure 2.3 Status Line on the Integrated Workstation Main Screen

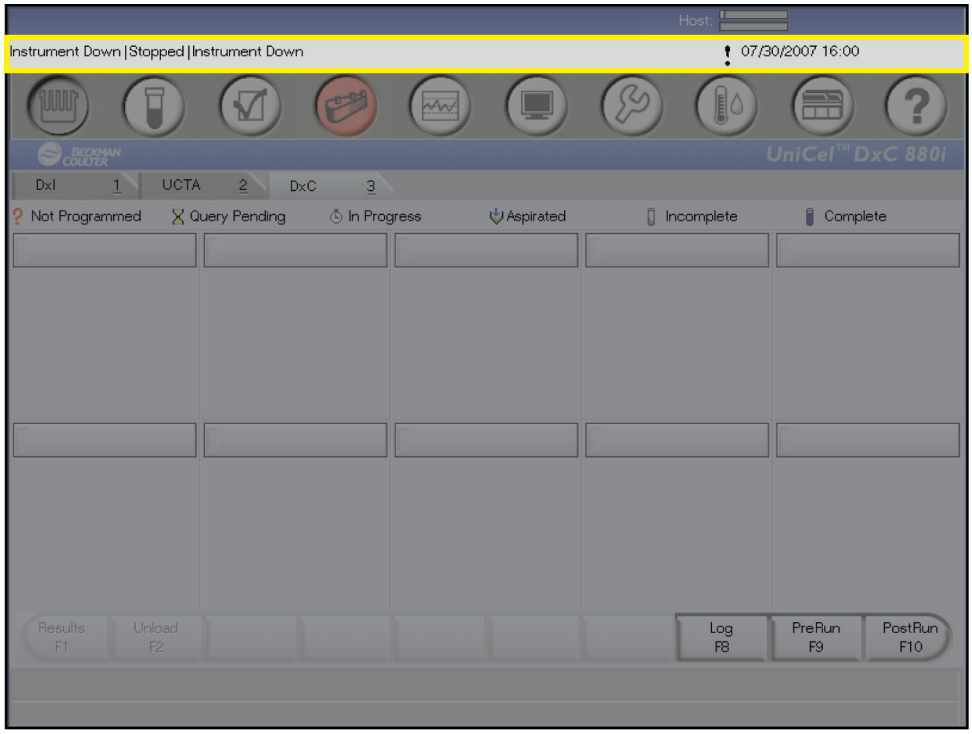

E007644S.PNG

The Status Line shows the status for each of the components, the printer, and the DxI Event Log.

Table 2.2 Status Line Functions

Status Indicator	Status Description
Instrument Status 	This indicator appears on the left side of the status line and displays the operating status of the individual system components as follows: DxI | UCTA | DxC The DxC section may be further divided when the Modular Chemistry (MC) and the Cartridge Chemistry (CC) functions do not have the same status, as follows: DxI | UCTA | MC/CC Running | Standby | Standby/Running.
Printing Status 	When this indicator appears at the middle of the status line, you must reboot the DxC system (See Shut Down the DxC and Restart the DxC) to restart printing.
DxI Console Status 	This indicator appears on the right side of the status line, next to the system date and time. The background reflects the status of the DxI Event Log, Sample Manager Exceptions, or Work Pending (QC Rerun only). NEUTRAL background indicates the DxI is operating normally; any Event Log messages are informational. YELLOW background indicates a condition that requires your attention soon. To review the DxI Event Log, Sample Manager Exceptions, or Work Pending, select the appropriate system status button from the DxI console. RED background indicates a serious fault or error condition that requires your immediate attention. To review the DxI Event Log, select the Event Log system status button (see DxI Event Log) from the DxI console.

Menu Bar

Figure 2.4 Menu Bar on the Integrated Workstation Main Screen

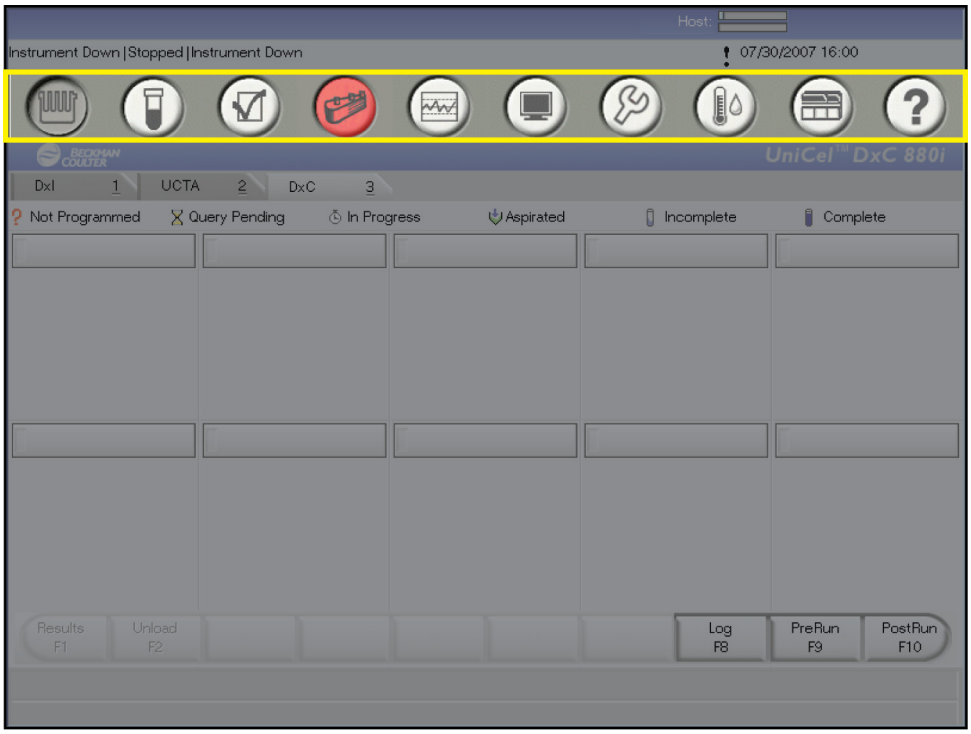

E007645S.PNG

The Menu Bar includes icons for major functions within the system. See Integrated Workstation Program Structure for a complete menu tree for each icon.

Table 2.3 Menu Bar Functions

Icon	Description
	Main Review sample status information. See Rack Status Area (DxC, UCTA tabs only) and Sample Status Area (DxI tab only).
	Samples Program samples and controls.See Program Samples.
	Results Recall test results. See Results Recall.
	Rgts/Cal Review supplies, reagent and calibration status, program calibration and perform supply maintenance. See Rgts/Cal: DxI Tab.
	QC Define and manage Quality Control.See Process QC Procedure.

Table 2.3 Menu Bar Functions *(Continued)*

Icon	Description
	Setup Configure the system. See System Setup Screen.
	Utils Perform functions such as DxC and UCTA priming, maintenance, alignment and diagnostics. See Utilities.
	Status Review DxC and UCTA hardware status information. See System Status.
	Instr Cmd Execute DxC and UCTA instrument commands.See Instrument Commands.
	Help View the Integrated Workstation *Instructions for Use*.

Function Bar

Figure 2.5 Function Bar on the Integrated Workstation Main Screen

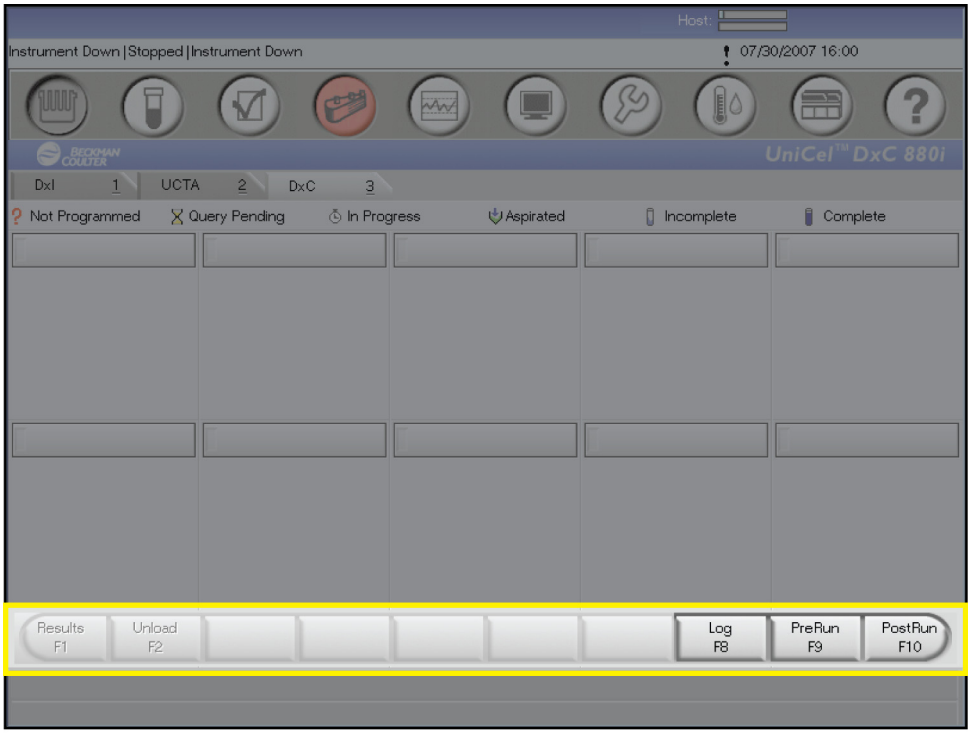

E007646S.PNG

The Function Bar includes buttons that are specific to the current screen. The number of active buttons and the label and function for each change on different screens. These buttons also correspond to the function keys on the PC keyboard. You can press the button on the screen or the indicated function key to start the function.

Message Line

Figure 2.6 Message Line on the Integrated Workstation Main Screen

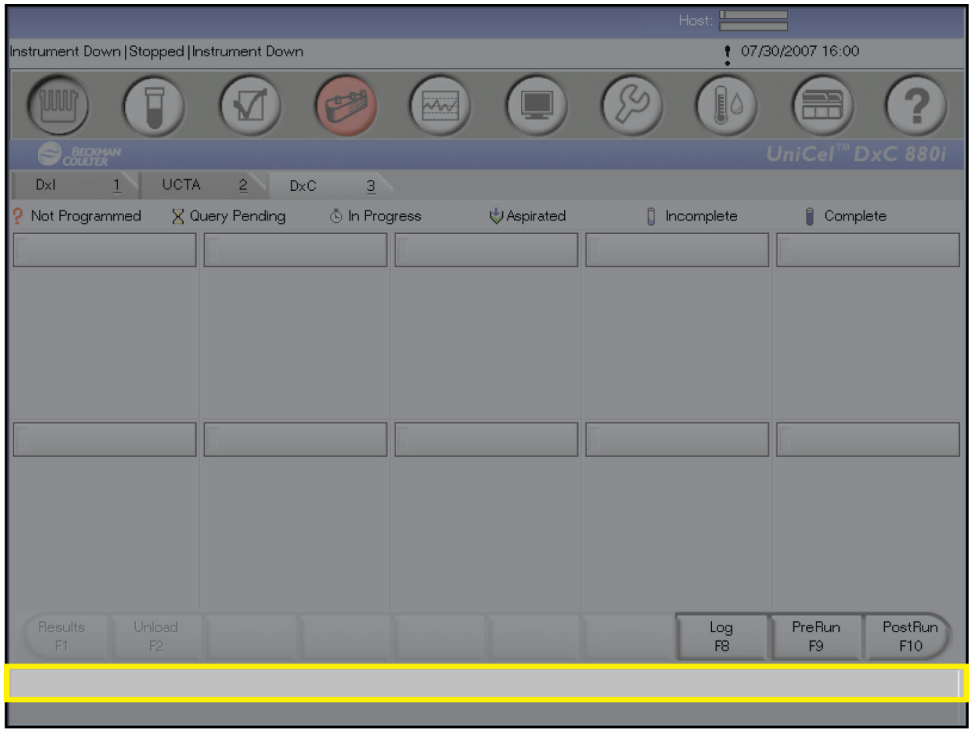

E007647S.PNG

The Message Line displays instructions for the next action required, or error message(s).

Main Screen Elements

The Main screen displays the status information for all samples loaded onto the system. Status information is sorted by instrument or process, and the information for each area is displayed on separate tabs.

Sample Status Tabs

Figure 2.7 Sample Status Tabs on the Integrated Workstation Main Screen

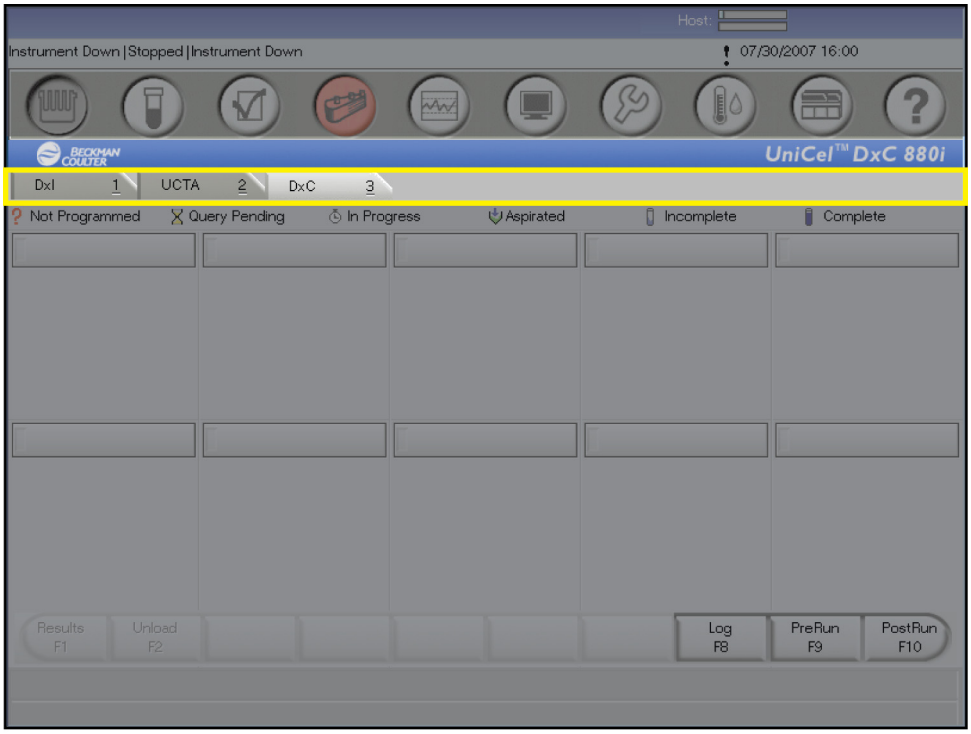

E007648S.PNG

The Main screen includes status tabs for the following areas:

Table 2.4 Sample Status Tabs

Tab	Area
DxI	Samples on the DxI sample storage and in processing
UCTA	Samples on the UCTA sample carousel
DxC	Samples on the DxC sample carousel

Sample Status Icons

Figure 2.8 Sample Status Icons on the Integrated Workstation Main Screen

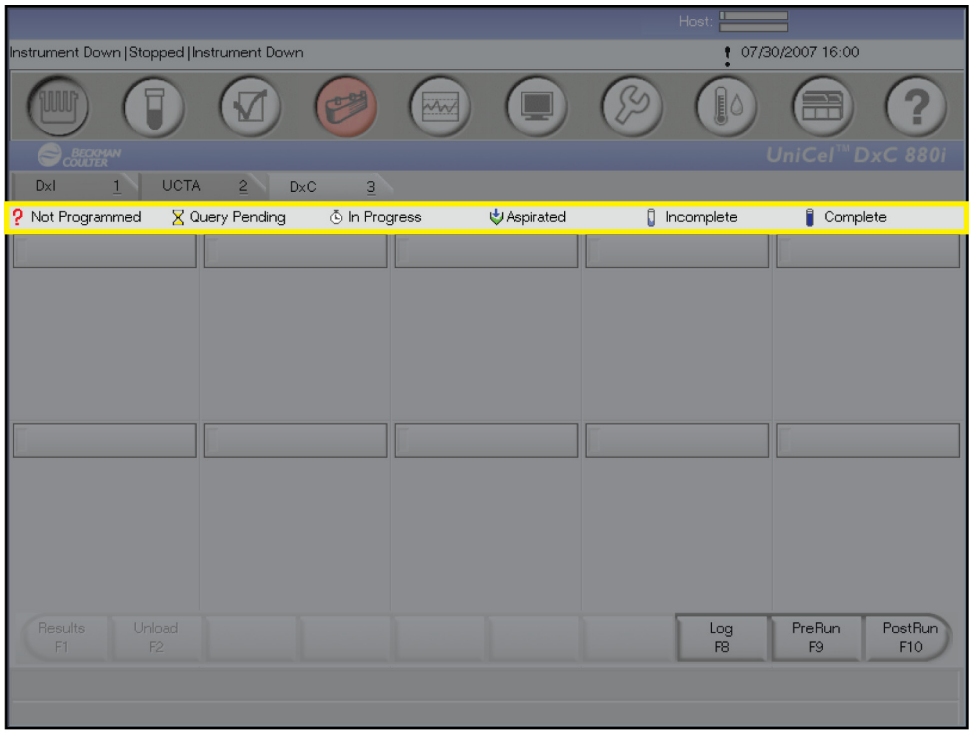

E007649S.PNG

Sample status is indicated by an icon to the left of the sample ID. The legend for the icons follows:

Table 2.5 Sample Status Icons

Status Indicator	Status Description
? Not Programmed	**Not Programmed** There is no programming for the sample ID.
Query Pending	**Query Pending** Waiting for programming to be downloaded from the Host.
In Progress	**In Progress** Testing or processing is in progress.
Aspirated	**Aspirated** (DxC, DxI tabs only) Sample has been aspirated for testing.
Incomplete	**Incomplete** System is unable to complete at least one test.

Table 2.5 Sample Status Icons *(Continued)*

Status Indicator	Status Description
Aliquoted	**Aliquotted** (UCTA tab only) Sample has been aliquotted for testing.
Complete	**Complete** All tests are complete.

Rack Status Area (DxC, UCTA tabs only)

Figure 2.9 Rack Status Area

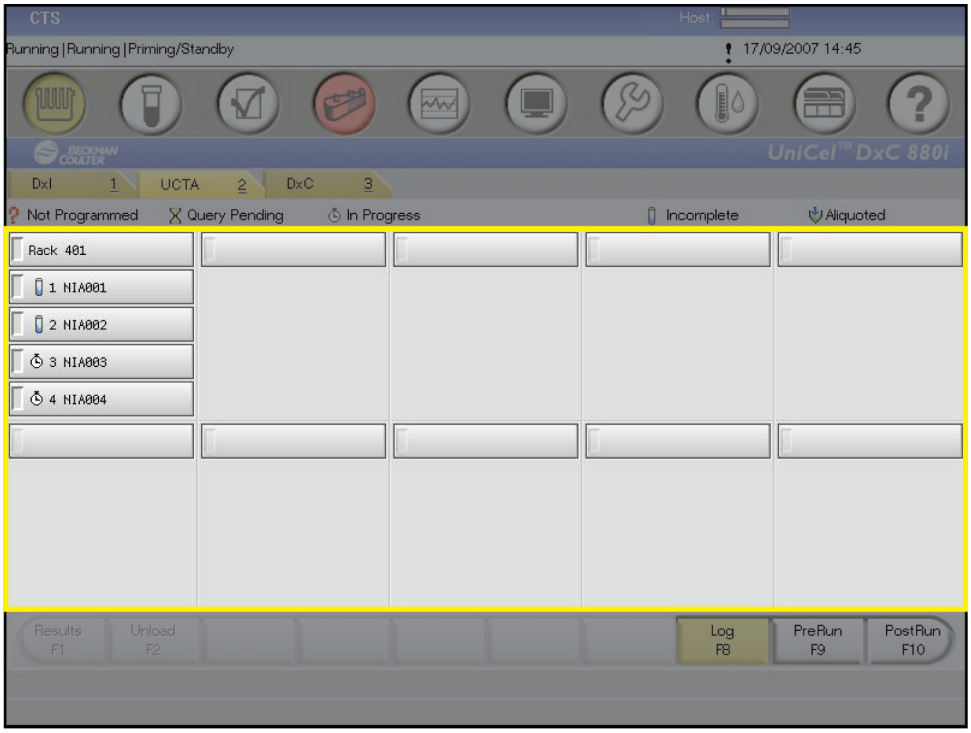

E007650S.PNG

Each box in the rack status area represents a slot on the sample carousel for the selected tab. When a rack is loaded, the rack number appears at the top of the corresponding box, and the samples on the rack are listed below the rack number.

NOTE Sample IDs are highlighted in yellow for STAT samples.

Sample Status Area (DxI tab only)

Figure 2.10 Sample Status Area

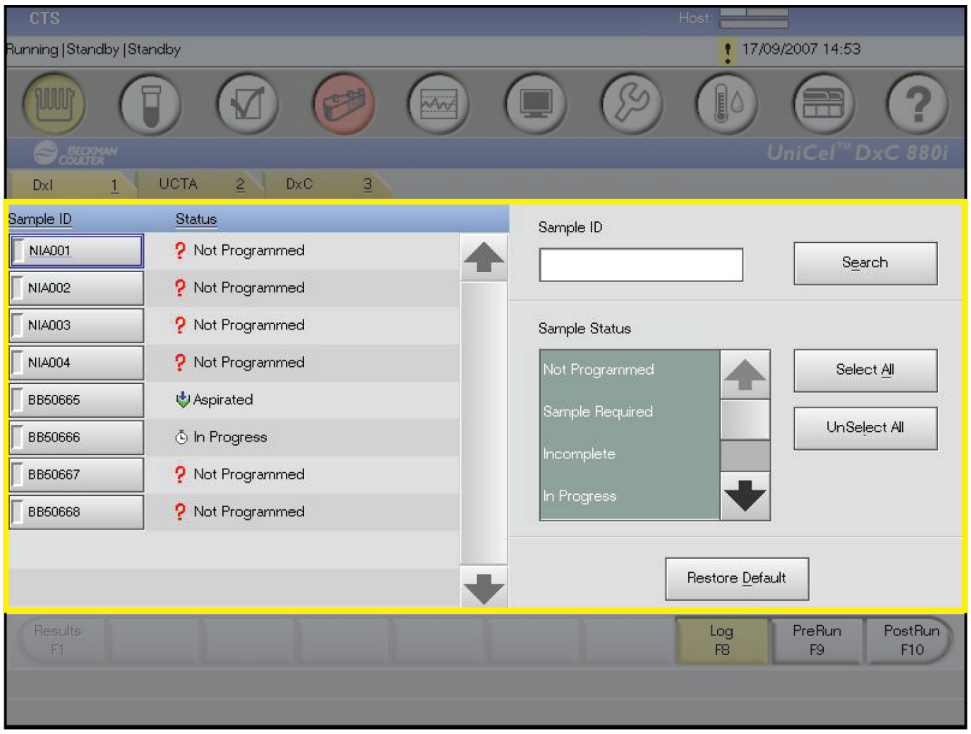

E007742S.PNG

The sample status area lists the samples programmed for processing on the DxI. To search for a specific sample, type the Sample ID in the **Sample ID** field and click (Search) . To display samples with a specific status, select the status in the **Sample Status** list. You can select multiple statuses, or use the (Select All) and (UnSelect All) buttons to select or deselect all statuses. The default is all statuses.

Select the **Sample ID** or **Status** heading to resort the samples in ascending or descending order by the chosen criterion.

NOTE Sample IDs are highlighted in yellow for STAT samples.

Main Screen Function Bar

Figure 2.11 Main Screen Function Bar on the Integrated Workstation Main Screen

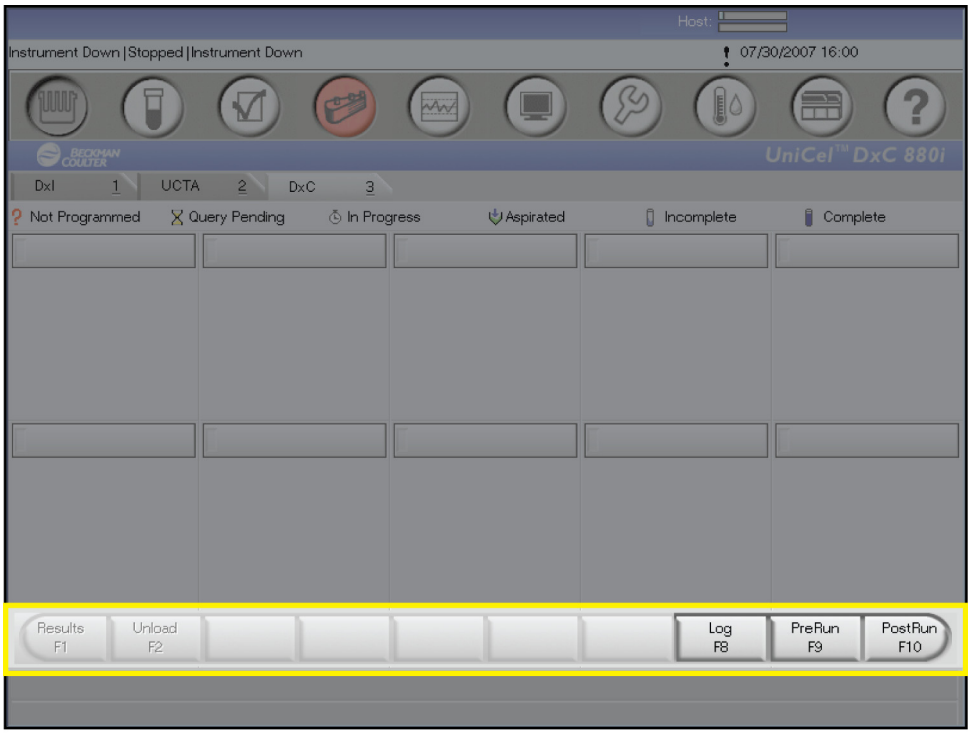

E007646S.PNG

Function buttons for the Main screen include:

Table 2.6 Main Screen Function Buttons

Status Indicator	Status Description
Results F1	**Results F1** Retrieves results for selected samples that are *In Progress* or *Aspirated* on the system.
Unload F2	**Unload F2** Unloads the selected rack at the next opportunity.
Log F8	**Log F8** Lists errors detected on samples, for example, incomplete tests, host query timeout, dulplicate sample ID, programming conflict. If the error is logged, the Log F8 key is highlighted in yellow. The yellow highlight disappears when the key is selected. The error will stay in the Sample Log screen for 12 hours.
PreRun F9	**PreRun F9** Prints information about the programmed tests for each reagent, to help determine reagent status before the run.
PostRun F10	**PostRun F10** Prints a list of samples that are Pending or Incomplete, with an explanation of the status.

DxI Main Menu

Use the DxI console for DxI calibration, maintenance, diagnostics, and when the UCTA is not functional. The DxI software includes a complete Help system of detailed operating and reference information that is not duplicated in this manual.

Figure 2.12 DxI Main Menu (DxI 800 shown)

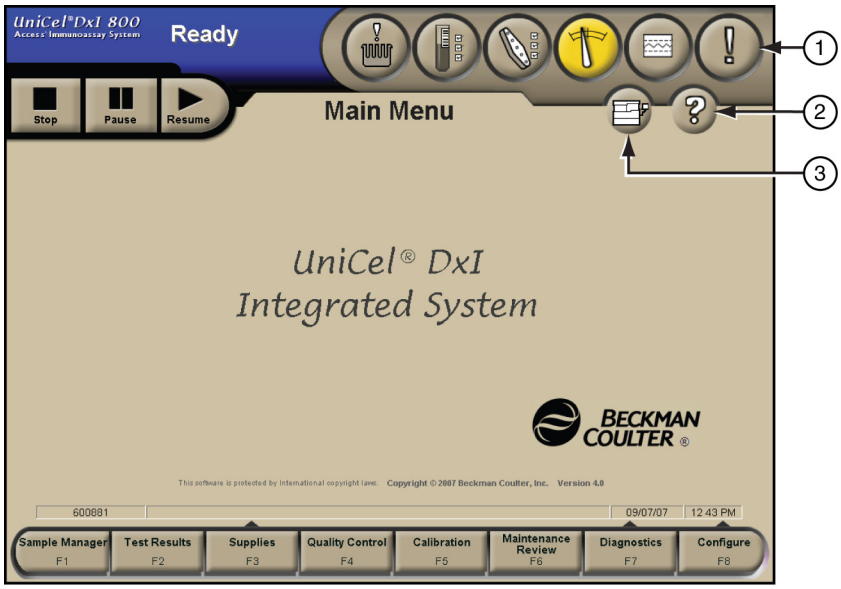

E007738S.PNG

1. Event Log system status button
2. Help button
3. UCTA/DxC status button

To display the DxI Help, press the Help button (2) on any screen on the DxI console.

To display the software version and system status for the DxC and the UCTA, select the UCTA/DxC status button (3).

DxI Event Log

The DxI Event Log displays information generated by the system, including troubleshooting information about caution or warning events. To display the Event Log, select the Event Log system status button (1).

The workstation console includes an icon that reflects the DxI Console Status.

Integrated Workstation Program Structure

The Menu Bar icons provide access to each of the functional areas of the system. The following illustrations diagram the menu tree for each icon.

Figure 2.13 DxC Integrated Workstation Program Structure (1 of 8)

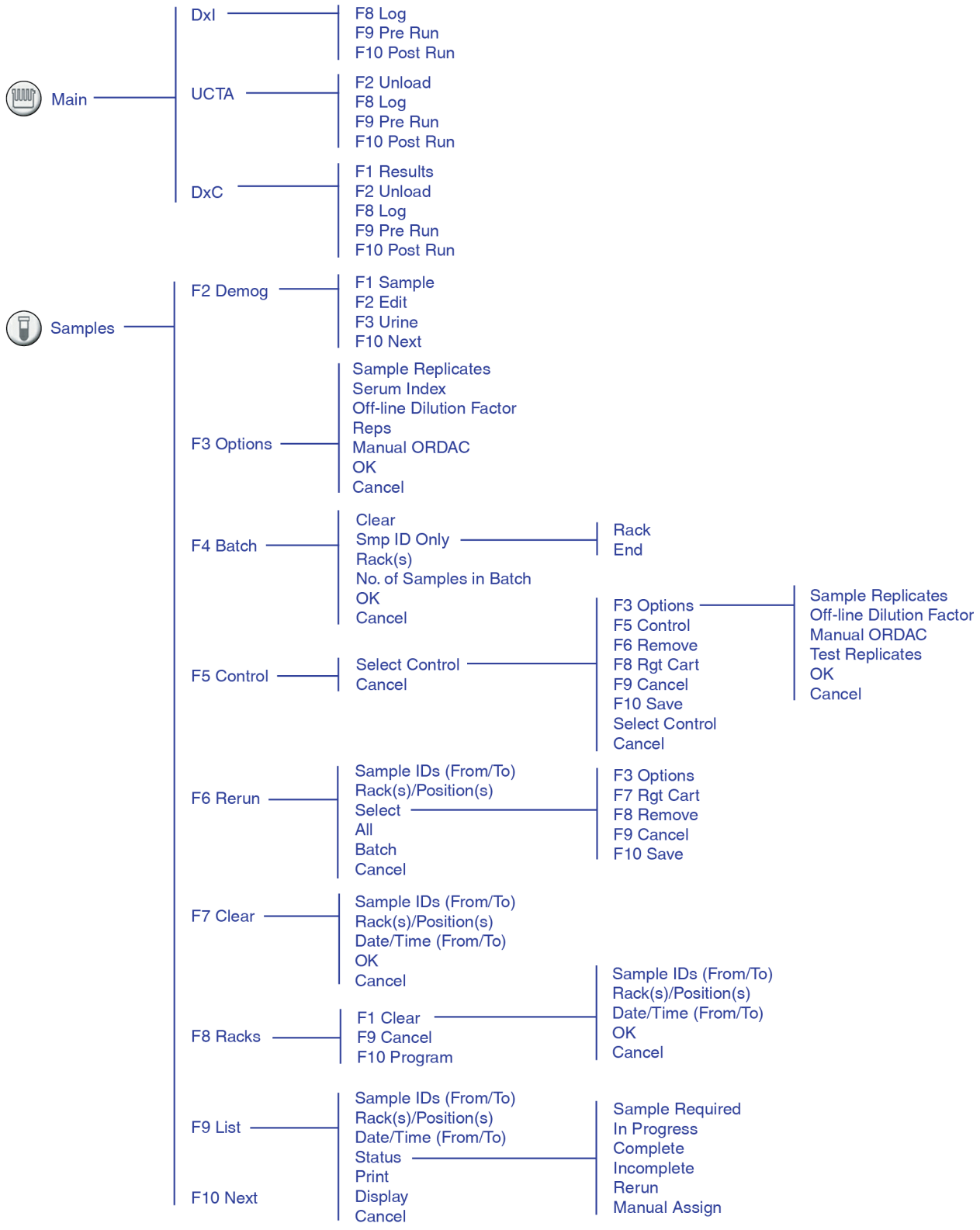

Figure 2.14 DxC Integrated Workstation Program Structure (2 of 8)

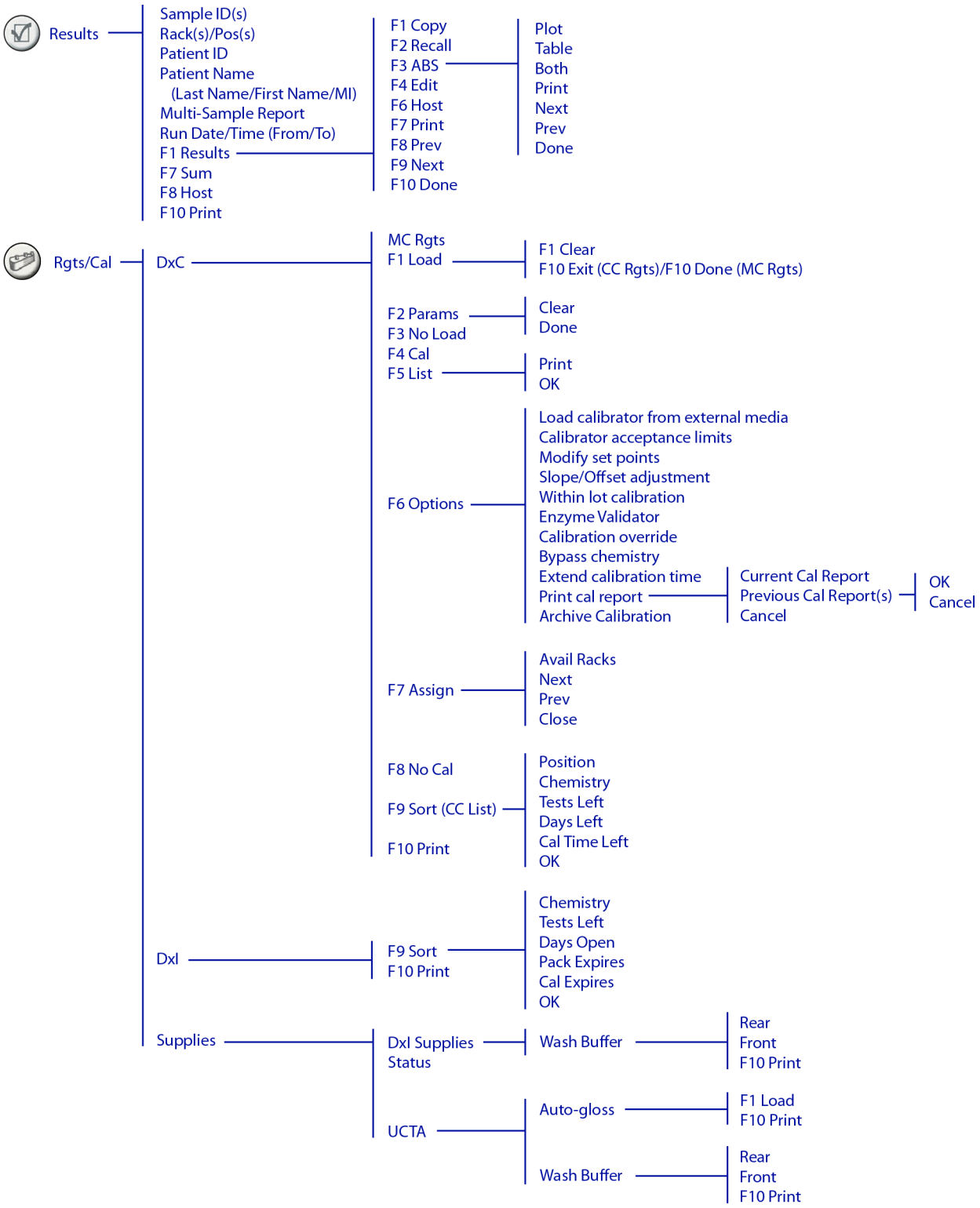

Figure 2.15 DxC Integrated Workstation Program Structure (3 of 8)

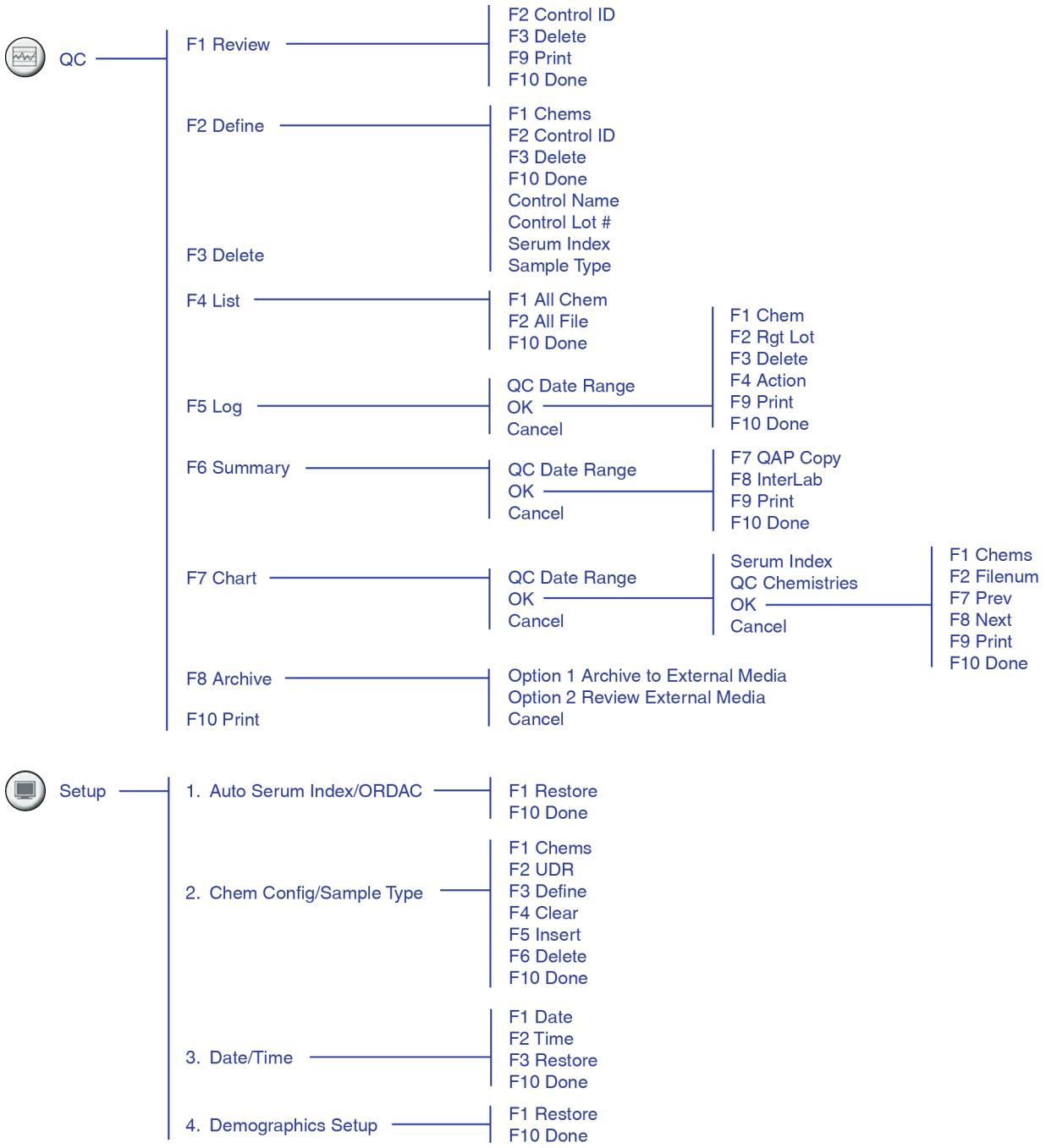

Figure 2.16 DxC Integrated Workstation Program Structure (4 of 8)

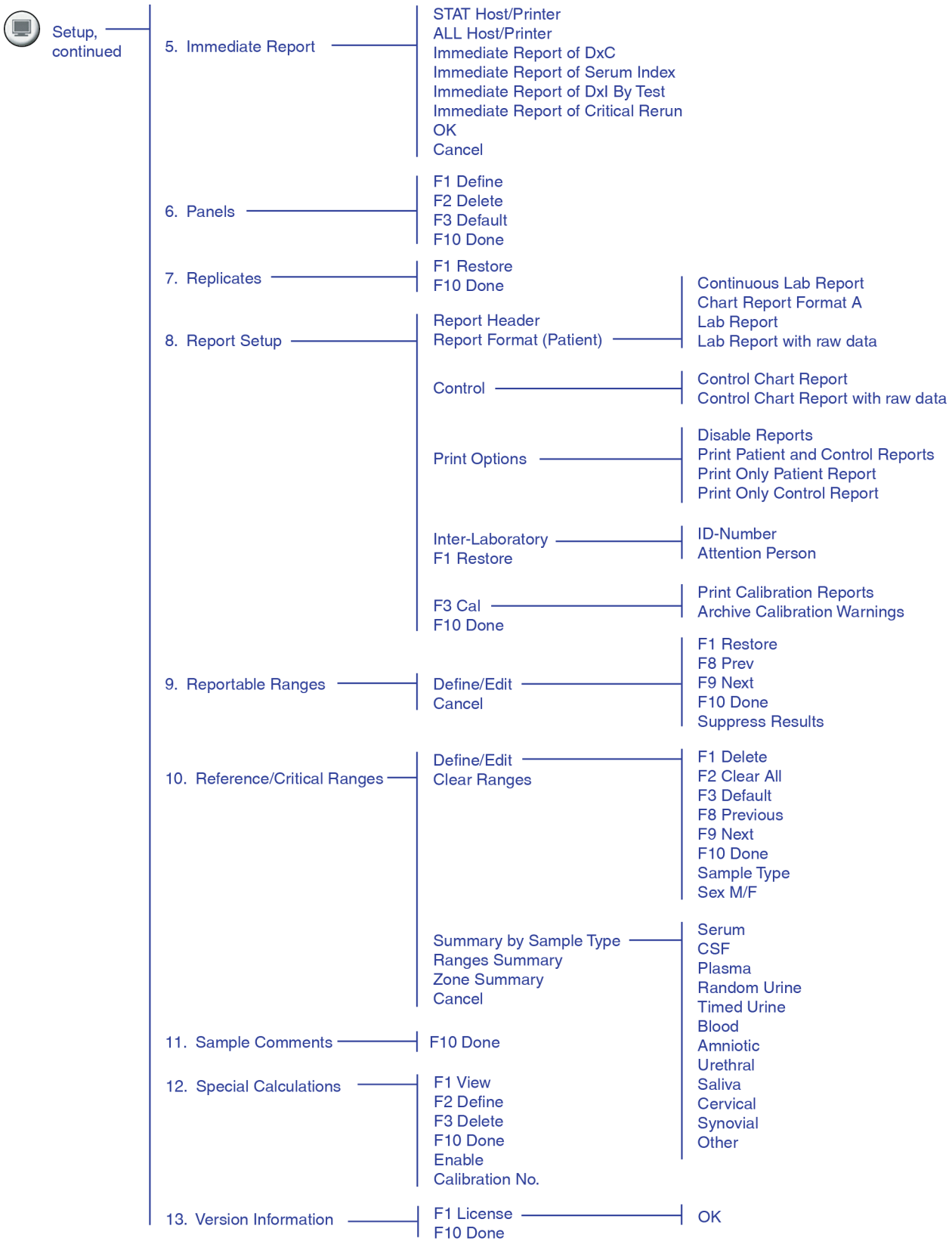

Figure 2.17 DxC Integrated Workstation Program Structure (5 of 8)

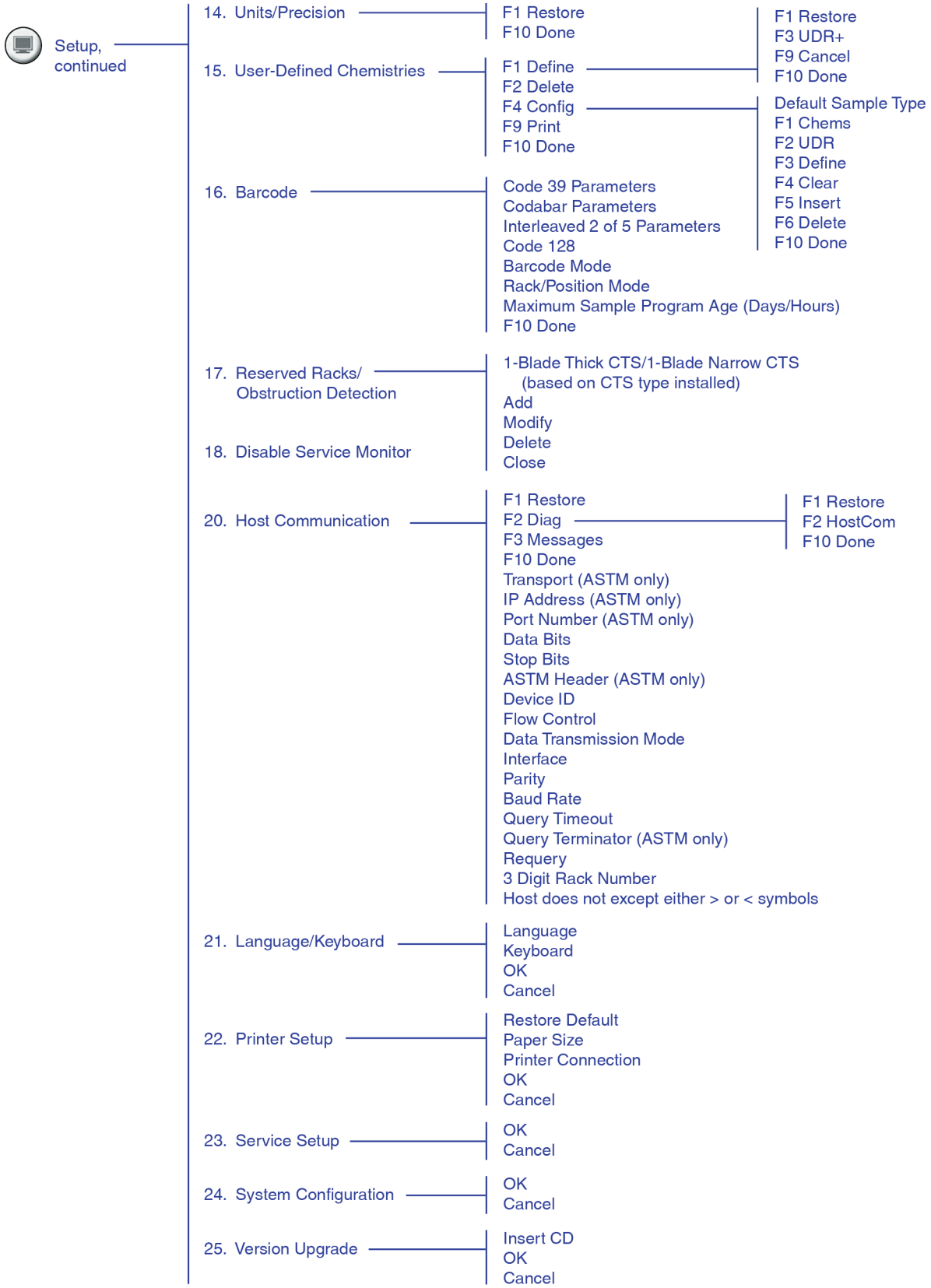

Figure 2.18 DxC Integrated Workstation Program Structure (6 of 8)

- Setup, continued
  - 26. Status Alarm/Annunciator
    - Alarm/No Alarm
    - Test
    - OK
    - Cancel
  - 27. Chem Update
    - System
      - DxC
        - Media
          - OK
          - Cancel
      - AAF
      - OK
      - Cancel
  - 28. Password Setup
    - OK
    - Cancel
  - 29. Auto Generation of Control
    - Control Samples
    - Multiple Cartridges
    - F10 Done
  - 30. DxI Priority/Reflex Test Setup
    - DxI Priority
    - Reflex
    - F10 Done
  - 31. UCTA Setup
    - UCTA Left Probe
    - UCTA Right Probe
    - OK
    - Cancel

- Utils
  - 1. Prime
    - F1 Prime
      - All CC Subsystems
      - All Hydropneumatic Subsystems
      - All MC Subsystems
      - Prime DxC
      - All UCTA Wash
      - All UCTA Auto-Gloss
      - CTS Auto-Gloss
      - CTS Blade Wash
      - Number of Primes to Repeat
    - F2 CC
      - Reagent Delivery Subsystem
      - Sample Delivery Subsystem
      - Cuvette Wash
      - Number of Primes to Repeat
    - F3 Hydro
      - Fill Canisters and reservoirs
      - CC Drain waste sump
      - CC Drain waste B sump
      - Drain gravity drain sump
    - F4 MC
      - Cup Selection:
        - ALBm (DxC 800 only)
        - CREm (DxC 800 only)
        - GLUCm
        - PHOSm (DxC 800 only)
        - TPm (DxC 800 only)
        - BUNm (DxC 800 only)
      - Prime Cup(s) with:
        - Reagent
        - DI Water
      - Sample Delivery Subsystem
      - ISE All
      - Electrolyte Buffer
      - Electrolyte Reference
      - EIC/SDC Wash
      - ISE CO2 Alkaline Buffer
      - Reference and Acid
      - Number of Primes to Repeat
    - F5 UCTA
      - Probe Wash
      - Auto-Gloss
    - Start Prime
    - Stop Prime
    - F10 Exit

Figure 2.19 DxC Integrated Workstation Program Structure (7 of 8)

- Utils, Continued
  - 2. Maintenance
    - 1. CTS Blade Replacement
    - 2. Cartridge Chemistry Probe Cleaning
    - 3. ISE Service
      - Electrode Maintenance Drain
      - Sample Dilution Cup (SDC) Maintenance
    - 4. Cup Maintenance
      - Prime20
      - Prime5
      - Drain
      - Rinse
      - Cancel
      - Albumin (DxC 800 only)
      - BUNm (DxC 800 only)
      - Creatinine (DxC 800 only)
      - Glucose
      - Phosphorus (DxC 800 only)
      - Total Protein (DxC 800 only)
    - 5. Hydropneumatic Maintenance
    - 6. Wash All Cuvettes
    - 7. Syringe Maintenance
      - Syringe or Syringe Plunger Replacement
    - 8. CUPs Lamp/Sensor Calibration
    - 9. CC Reagent Wash All Cuvettes
    - 10. Clean Flow Cell, Cups & CC Probes/Mixers
      - Albumin (DxC 800 only)
      - BUNm (DxC 800 only)
      - Creatinine (DxC 800 only)
      - Glucose
      - Phosphorus (DxC 800 only)
      - Total Protein (DxC 800 only)
      - CC Probes/Mixers
      - CC Cuvettes
      - Start
      - Close
      - Available Racks
      - Rack Number
      - ISE/MC Rack
      - CC Rack
    - F1 Action
    - F2 Log
      - Scheduled Maintneance Log
      - Initial/Date
      - Print
      - Approve
      - Done
    - F10 Exit
  - 3. Event Log
    - Display
    - Copy
    - Time
    - Clear
    - Print
    - Done
    - 1. Chemistry Errors
    - 2. Motion Errors
    - 3. Status Monitor Errors
    - 4. Other Instrument Errors
    - 5. Instrument Events
    - 6. LIS Comm. Errors
    - 7. Other Console Errors
    - 8. Input Device Events
    - 9. Other Console Events
    - 10. Sample Processing Events
    - 11. Deleted Results
    - 12. Dxl Communications
    - 13. UCTA Events
  - 4. Diagnostics
    - Functional Area
      - Sample System
      - Reagent System
      - Reaction System
      - Hydropneumatic System
      - ISE Module System
      - Modular Cup Chemistry Module
      - Valve and Fluidics
    - Sub-functional Area
      - Based on Functional Area selected
    - Test No.
      - Based on Sub-Functional Area selected
    - F10 Exit

Figure 2.20 DxC Integrated Workstation Program Structure (8 of 8)

- Utils, continued
  - 5. Alignment
    - Functional Area
      - Align All
      - Reaction Carousel
      - Cuvette Wash Station
      - Reagent Carousel
      - Sample Carousel
      - Sample Rack Handling
      - Sample Rack Barcode Reader
      - Cap Piercer
      - CC Sample Crane or Probe
      - CC Sample Crane Smart Module (B2)
      - MC Sample Crane or Probe
      - MC Sample Crane Smart Module (52)
      - Reagent A Crane or Probe
      - Reagent A Crane Smart Module (C2)
      - Reagent B Crane or Probe
      - Reagent B Crane Smart Module (C3)
      - CC Sample Mixer Crane or Body
      - CC Sample Mixer Smart Module (B3)
      - Reagent Mixer Crane or Body
      - Reagent Mixer Smart Module (C1)
      - UCTA Assemblies
    - Procedure No.
      - Based on Functional Area selected
    - F10 Exit
  - 6. PVT
    - Functional Area
      - Performance Verification Tests
      - UCTA Performance Verification Tests
    - Sub-Functional Area
      - Based on Functional Area Selected
    - Test No.
      - Based on Sub-Functional Area Selected
    - F10 Exit
  - 7. Modem
  - 8. Backup/Restore
    - System Parameters
    - Alignment Data Files
    - Backup
    - Restore
    - Cancel
  - 9. Metering
    - F1 Copy
    - F2 Replen
    - F3 Report
    - F4 Off
    - F5 Modem
    - F9 Cancel
    - F10 Done
    - Facility Name
    - Facility Address
    - Meter day-of-the-Month
    - Meter Period Duration
  - 10. Touch Screen Calibration
- Status
  - 1. Summary
  - 2. Count
  - 3. Temp
  - 4. Power
  - 5. Hydro
  - 6. SmrtMdl
  - 7. CuvStat
  - 8. CTS
  - F10 Print
- Instr Cmd
  - 1. Home
    - DxC 1
    - UCTA 2
    - Both 3
  - 2. Pause
  - 3. Stop Print
  - 4. Shutdown
  - 5. Pause Waste B
  - 6. Resume Waste B
  - 7. Enable/Disable Modules
  - 8. Unload All Racks
    - DxC 1
    - UCTA 2
    - Both 3
- Help
  - Back
  - Forward
  - Home
  - Print
  - Install
  - Properties
  - Return to DxC SW

CHAPTER 3

Daily Start Up

Introduction

These procedures ensure that your system has adequate supplies and calibrated reagent for your patient run, and include maintenance steps and quality control procedures to ensure continued optimal performance.

IMPORTANT This procedure assumes that the initial system setup has been completed.

Start Up Procedure

1. Clear manually assigned racks.
2. Determine integrated workstation supply and calibration status.
3. Replenish DxI supplies and reagents.
4. Perform DxI Daily Maintenance.
5. While the Clean System Routine is running, replenish UCTA supplies.
6. Replenish DxC reagents and supplies.
7. Calibrate DxC chemistries.
8. Calibrate DxI assays.

9 Process Quality Control.

Clear Manually Assigned Racks

Sample racks cannot be programmed while they retain previous programming. Clear sample racks to facilitate sample processing.

1 Select **Samples** from the menu bar.

2 Select **Clear F7**.

3 Type the Rack/Position(s) to be cleared. You can enter single or multiple racks. If you enter only the rack number, the system clears all positions in the rack.

4 Select **OK** to continue clearing. The system displays a confirmation screen.

5 Select **OK** to clear the rack(s).

Determine Integrated Workstation Supply and Calibration Status

Use this procedure to determine supply and reagent status and calibrations you must perform.

1 Print the Integrated Workstation supply/calibration report.

   a. At the workstation console, select the **Rgts/Cal** icon. On the screen, supplies and reagents highlighted in yellow require attention soon. Supplies and reagents highlighted in red indicate that supply is empty, requires calibration, or otherwise requires immediate attention.

   b. Select **Print F10**.

2 Review the following information on the report:

- Pages 1-2: DxC reagents and DxC chemistry calibration status.
- Page 3: DxI reagents and DxI assay calibration status
- Page 4: DxI supplies
- Page 5: UCTA supplies

Replenish DxI Supplies and Reagents

Refer to the Integrated Workstation Supply/Calibration Report, or to the DxI and Supplies tabs on the Rgts/Cal screen of the workstation console to determine which supplies and reagents on the DxI analyzer require replacement. Refer to the DxI Help system, on the DxI console, for complete instructions.

1 Change an Empty or Expired Substrate Bottle.

2 Change an Empty Bulk Wash Buffer Container.

3 Add RVs to the hopper.

4 Change a Full Bulk Liquid Waste Container (if your system is not plumbed to a drain).

5 Change a Full Solid Waste Container.

6 Load a Reagent Pack onto the instrument, as necessary.

Perform DxI Daily Maintenance

Follow these steps to perform daily maintenance on the DxI analyzer. Refer to the DxI Help system, on the DxI console, for complete instructions.

1. If the Utility Routine is not enabled, Prime the Fluidics.

   To check the Utility Routine, select **Maintenance Review F6** at the DxI console. If the **F6** button displays **Disable Utility Routine**, the Utility Routine is enabled and no action is required. If the **F6** button displays **Enable Utility Routine**, the Utility Routine is not enabled. Prime the Fluidics and select **Enable the Utility Routine F6** to enable the Utility Routine.

2. Back Up DxI.

3. Shake the DxI Solid Waste Container.

4. Program and process the appropriate Clean System Routine. See Run DxI Clean Routine.

5. Initial and date the Electronic Scheduled Maintenance Log. You can indicate in the Action Log what type of Clean System Routine you ran.

Replenish UCTA Supplies

While the Daily or Special Clean System Routine is running on the DxI, replace supplies and reagents on the UCTA and the DxC analyzer if they are low or expired. Refer to the Integrated Workstation Supply/Calibration Report, or to the Supplies tab on the Rgts/Cal screen of the workstation console to determine which supplies and reagents on the UCTA require replacement.

1. Change the Wash Buffer at the UCTA Unit, if empty.

2. Change the Auto-Gloss Solution at the UCTA Unit, if empty.

Replenish DxC Reagents

Refer to the Integrated Workstation Supply/Calibration Report, or to the Dxc tab on the Rgts/Cal screen of the workstation console to determine which supplies are low. You may need to replace MC reagents and supplies or CC cartridges.

1. Replace MC reagents. See Load/Unload Modular Chemistries (MC).
2. Replace CC cartridges. See Load/Unload Cartridge Chemistries (CC).

Calibrate DxC Chemistries

Refer to the Integrated Workstation Supply/Calibration Report, or to the DxC tab on the Rgts/Cal screen on the workstation console to determine which chemistries require calibration.

1. Select **Rgts/Cal** from the menu bar.
2. Select the chemistries to be calibrated. If necessary, use the up and down arrows to select more chemistries.
3. Select **Cal F4**.
4. Select **List F5** to review the calibrator load list. If the calibrator has a lot number, make sure the lot number on the bottle agrees with the lot number seen on the screen. If it does not agree, load the calibrator information. See Load Calibrator from External Media.
5. Use appropriate bar code labeled tubes for all calibrators. If bar code labels are not available, place in assigned rack and position. See Calibrator Assignment for more information.
6. Place calibrator into sample cups.
7. Place the rack in the UCTA load tray with the rack bar code label to the right.
8. Press **RUN**.

9 Verify that all the chemistries you calibrated now show the status of **Calibrated**:

   a. At the workstation console, select the **Rgts/Cal** icon. Select the DxC tab on the Calibration screen.

   b. Review the chemistries you calibrated.

Calibrate DxI Assays

Refer to the Integrated Workstation Supply/Calibration Report, or to the DxI tab on the Rgts/Cal screen of the workstation console to determine which assays require calibration.

This procedure is performed at the DxI console.

1 From the Main Menu, select **Sample Manager F1** to display the Sample Manager screen.

2 Select **New Request F3**, then select **Calibration F2** to display the Request Calibration window.

3 Select the calibrator lot for this calibration request, then select **OK F1**.

4 On the Test Requests screen, type the rack ID in the **Enter ID** field and press (Enter). If the calibrator requires a second rack, the cursor moves to a second **Enter ID** field.

   - To enter a second rack ID, type the rack ID and press (Enter).
   - To change the calibrator lot, select another lot from the list in the **Calibrator Lot** field. If the lot number is not listed, add the calibrator to the system. See the DxI Online Help system for instructions.
   - To change the reagent lot for this calibration request, select the **Change Reag. Lot** button.

5 Place the calibrator samples in the racks in the order identified on the Test Request screen in Step 4.

6 To request additional calibrations, repeat this procedure beginning at Step 2.

7 When you are done entering calibration requests, exit the Test Requests screen.

8 Load the racks on the DxI SPU (Sample Presentation Unit).

9 When calibration is complete, verify that all the assays you calibrated now show the status of **Calibrated**:

a. At the workstation console, select the **Rgts/Cal** icon. Select the DxI tab on the Calibration screen.

b. Review the assays you calibrated.

Process Quality Control

Run Quality Control samples when your laboratory protocol indicates that control material should be analyzed. Beckman Coulter highly recommends a daily analysis of at least two levels of control. In addition, run these controls with each new calibration, with each new lot of reagents, and after specific maintenance or troubleshooting activities.

NOTE Before you can process QC samples, they must be defined in the system. This procedure assumes you have enabled Auto Generation of Control and you have bar coded quality control tubes. See Define a Controlfor more information.

1 Place cups that contain QC material in bar code labeled tubes. All tube bar code labels must be visible through the slots on the same side of the rack as the rack bar code label.

2 Place rack(s) in the UCTA load tray with the bar code labels to the right.

3 Press **RUN**.

The instrument automatically runs tests that are:

- Defined for the control.
- Loaded and calibrated.
- Contain sufficient volume to run the controls.

CHAPTER 4

Sample Programming and Processing

Introduction

This chapter describes how to prepare, program and process test samples.

Sample programming identifies the samples, selects tests to run, describes samples, and designates how to run samples. Your samples may be programmed through a Host computer such as a Laboratory Information System (LIS), or directly from the Integrated Workstation. The minimum information required to save a sample program on the Integrated Workstation includes:

- a sample ID
- and one test selection

Assign test selections by panel or by individual test. You can describe and define samples through sample type, sample comment, patient ID, and patient demographic functions. You can program a sample as a control sample or as a STAT for priority processing.

You can use the Sample Options feature to modify sample replicates and test replicates, enter an off-line dilution factor, select/deselect serum index, and program a manual ORDAC (Over Range Detection and Correction). You can program samples in a batch, rerun samples, and clear samples. You can request a Load List that shows pending tests, as needed.

⚠ WARNING

If your Host (LIS) or normal workflow requires the reuse of sample IDs, the sample programming should be cleared from the Integrated Workstation at a time interval that is less than the shortest time of sample ID reuse. The Integrated Workstation over-write feature is not sufficient to successfully reuse sample IDs. If this warning is not followed, results from the new request are merged with tests from incomplete samples that previously used that ID. In addition, patient demographics at the instrument are from the previous use of the sample ID. Since demographics are not uploaded from the instrument, it is possible for these merged results to be uploaded to the Host which would contain the current demographics.

Sample Processing Procedure

1. Prepare Samples for Analysis.
2. Load samples into appropriate racks.
3. If necessary, Program Samples into the system.
4. Place samples in the UCTA load tray, with priority samples first.

Prepare Samples for Analysis

Check Sample Containers

NOTE Only validated sample containers may be used on the Integrated Workstation. See Preparation of Sample Containers for the complete list of validated containers.

Sample Tubes Validated for Cap Piercing

On the UCTA, the piercer probes pierce sample caps and the aliquot probes aspirate sample directly from the tubes. On the DxC, the CTS (Closed Tube Sampling) assembly cuts the cap and the sample probe aspirates a sample directly from the tube. With these procedures, samples are processed faster and more safely.

NOTE Cap piercing (both the UCTA and the DxC CTS) can be disabled. See Enable/Disable CTS.

Cap Piercer Validated Sample Tubes
Only validated closed sample tubes can be processed on the UCTA or the CTS on the DxC System. However, capped and uncapped tubes, 0.5 mL, and 2.0 mL sample cups can be placed directly in the same rack if the rack is defined as 75 mm or 100 mm in the Reserved Rack Setup screen. Refer to the UniCel DxC Synchron Clinical Systems *Reference Manual* for this procedure.

⚠ CAUTION

Before placing validated closed tubes on the Integrated Workstation, check the top of the cap for any residual blood. Residual blood can contaminate the sample and affect results, or damage instrument components. If blood is present, remove it by using a cotton-tipped applicator stick moistened with DI water. When running in the CTS mode, if tubes off-loaded from the Integrated Workstation have water or droplets of water on the caps, disable the CTS and contact Beckman Coulter Support Center. Note: Auto-Gloss on a cap is normal.

Minimum Sample Volume

Tubes and cups must contain a minimum sample volume to run tests. To determine the volume of sample required, refer to the UniCel DxC Integrated Workstation *Sample Template*.

Rack Types

You must place containers in properly-defined racks.

Define racks in the Reserved Rack Setup screen. Refer to the UniCel DxC Synchron Clinical Systems *Reference Manual* for this procedure.

You can use sample container labels to identify differently defined racks. Refer to the UniCel DxC Synchron Clinical Systems *Reference Manual* and the UniCel DxI *Instructions for Use* for rack label part numbers.

Table 4.1 has several examples of rack labels for the Integrated Workstation.

Table 4.1 Integrated Workstation Rack Label Examples

Rack Labels	Use for:
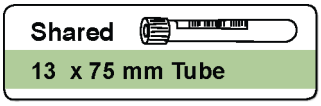	Primary tube 13 x 75 mm Secondary tube 12 or 13 x 75 mm
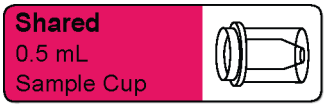	0.5 mL Sample Cup (PN 651412)
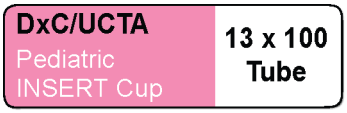	1.0 mL Pediatric Insert Cup (conical bottom--PN 81916) in a 12 or 13 x 75 mm tube
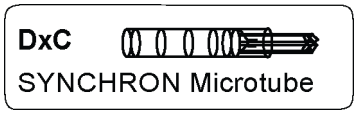	Synchron Microtube

Sample Preparation by Container Type

Table 4.2 shows how to prepare different sample containers. The table is sectioned as follows:

Shared	Containers that can be used through the UCTA, or in the DxC or DxI independently.
UCTA/DxC	Containers that can be used through the UCTA, or in the DxC independently.

Containers that can be used on the the DxC only or the DxI only are listed in Table 9.1, CHAPTER 9, *Independent Mode*.

Table 4.2 Preparation of Sample Containers

If running a sample from a...	Then...
Shared	
Primary Tube 13 x 75 mm Becton Dickinson VACUTAINER with HEMOGARD[a] and Greiner VACUETTE[b] are validated for 1-Blade Thick CTS A014510L.PNG	• Use the UniCel DxC Integrated Workstation *Sample Template* to determine adequate sample volume. • Place into a 13 x 75 mm rack. • Remove the cap. — if not using CTS. — if not validated for CTS. — if loading directly onto DxI.
Primary Tube 13 x 75 mm Becton Dickinson VACUTAINER with HEMOGARD Buffered Sodium Citrate (9NC) (4.5 mL draw)	• Use the UniCel DxC Integrated Workstation *Sample Template* to determine adequate sample volume. • Place into a 13 x 75 mm rack. • Remove the cap.
Primary Tube 13 x 100 mm Becton Dickinson VACUTAINER with HEMOGARD and Greiner VACUETTE are validated for 1-Blade Thick CTS A014510L.PNG	• Use the UniCel DxC Integrated Workstation *Sample Template* to determine adequate sample volume. • Place into a 13 x 100 mm rack. • Remove the cap. — if not using CTS. — if not validated for CTS. — if loading directly onto DxI.
Primary Tube 16 x 100 mm Becton Dickinson VACUTAINER with HEMOGARD is validated for 1-Blade Thick CTS A014510L.PNG	• Use the UniCel DxC Integrated Workstation *Sample Template* to determine adequate sample volume. • Place into a 16 x 100 mm rack. • Remove the cap. — if not using CTS. — if not validated for CTS. — if loading directly onto DxI.
Primary Tube 92 x 15 mm Sarstedt S-Monovette[c] is validated for 1-Blade Narrow CTS	• Use the UniCel DxC Integrated Workstation *Sample Template* to determine adequate sample volume. • Place into a 16 x 100 mm rack. • Remove the cap. — if not using CTS. — if not validated for CTS. — if loading directly onto DxI.
Secondary Tube 12 x 75 mm 13 x 75 mm A014496L.PNG	• Use the UniCel DxC Integrated Workstation *Sample Template* to determine adequate sample volume. • Place into a 13 x 75 mm rack. • Check for fibrin or other materials resulting from storage.

Table 4.2 Preparation of Sample Containers *(Continued)*

If running a sample from a...	Then...
Sample Cup 0.5 mL (PN 651412) 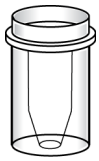 0.5 mL E007662L.PNG	• Use the UniCel DxC Integrated Workstation *Sample Template* to determine adequate sample volume. • Place the cup into the appropriate 13 mm rack (setup dependent). • Make sure there are no bubbles in sample cup.
Sample Cup 2.0 mL (PN 652730 or 81902) 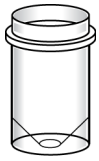 2.0 mL E007663L.PNG	• Use the UniCel DxC Integrated Workstation *Sample Template* to determine adequate sample volume. • Place the cup into the appropriate 13 mm rack (setup dependent). • Make sure there are no bubbles in sample cup.
1.0 mL Insert Cup (PN 81915) in 12 x 75 mm or 13 x 75 mm Tube	• Use the UniCel DxC Integrated Workstation *Sample Template* to determine adequate sample volume. • Place into a 13 x 75 mm rack. • Make sure there are no bubbles in the insert cup. • Do not overfill.
1.0 mL Insert Cup (PN 81915) in 13 x 100 mm Tube	• Use the UniCel DxC Integrated Workstation *Sample Template* to determine adequate sample volume. • Place into a 13 x 100 mm rack. • Make sure there are no bubbles in the insert cup. • Do not overfill.
2.0 mL Insert Cup (PN 81917) in 16 x 100 mm Tube	• Use the UniCel DxC Integrated Workstation *Sample Template* to determine adequate sample volume. • Place into a 16 x 100 mm rack. • Make sure there are no bubbles in the insert cup. • Do not overfill.
DxC/UCTA Only	
Primary Tube 75 x 15 mm[d] Sarstedt S-Monovette is validated for 1-Blade Narrow CTS	• Use the UniCel DxC Integrated Workstation *Sample Template* to determine adequate sample volume. • Place into special 5.5 mL rack (cannot be loaded directly onto DxI Sample Presentation Unit). • Remove the cap. — if not using CTS. — if not validated for CTS.
1.0 mL Pediatric Insert Cup (PN 81916) in 12 x 75 mm or 13 x 75 mm Tube	• Place into a 13 x 75 mm rack. • Make sure there are no bubbles in the insert cup. • Do not overfill.

Table 4.2 Preparation of Sample Containers *(Continued)*

If running a sample from a...	Then...
1.0 mL Pediatric Insert Cup (PN 81916) in 13 x 100 mm Tube	• Place into a 13 x 100 mm rack. • Make sure there are no bubbles in the insert cup. • Do not overfill.
0.5 mL or 2.0 mL Sample Cup in 5 mL Transfer Tube (PN 979272)	• Place into a 16 mm rack. • Make sure there are no bubbles in the sample cup.

a. Registered trademark of the Becton Dickinson Corporation.
b. Registered trademark of the Greiner Corporation.
c. Registered trademark of the Sarstedt Corporation.
d. Requires a special amber/purple 5.5 mL rack (PN A18642)

Bar Code Labeling

Bar code labels are highly accurate and efficient for identifying and processing laboratory samples. However, the system must be able to identify and read every bar code label to process each sample correctly. The following paragraphs provide some basic information pertaining to bar code labels. Additional bar code information can be found in the UniCel DxC Synchron Clinical Systems *Reference Manual*.

⚠ CAUTION

A misread label can cause one sample ID to be read as another. The laboratory's process for printing, placing, and meeting all bar code specifications is important to achieve highly accurate reading. Follow the bar code label specifications in the UniCel DxC Synchron *Reference Manual* to keep the rate of misread labels to a minimum.

Bar Code Label Placement

Apply bar code labels to each sample tube in the correct location so that the bar code reader can read the bar code. The following diagram (Figure 4.1) describes how to place the label on a sample tube.

Figure 4.1 Bar Code Label Placement

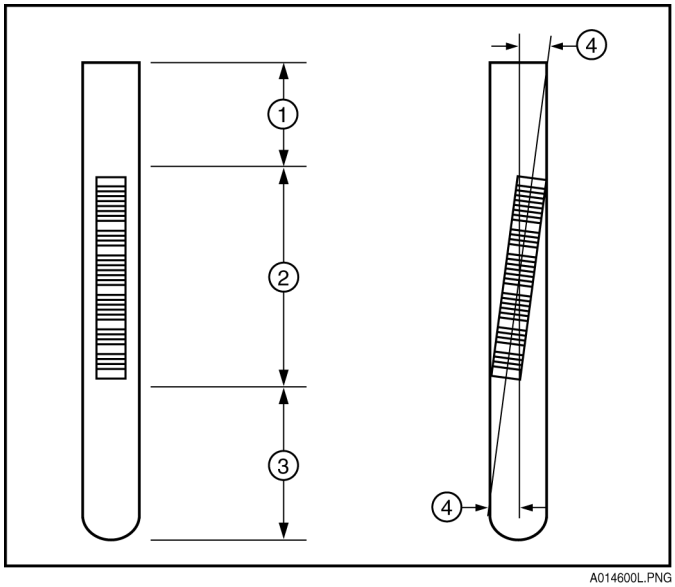

1. 14 mm (0.55 inch) Minimum
2. Label Placement Area
3. 20 mm (0.78 inch) Minimum
4. 7.5 Degree Maximum

Prior to Programming

Prior to programming, determine which racks are available for programming.

Rack Status

You can assign patient samples, controls, or calibrators to racks which you then load onto the system for sample processing. Each rack is uniquely numbered (1-999) and can be assigned samples in a maximum of four positions. The Rack Status screen shows information about the current programming for a rack and how many positions within a rack are available for programming. Racks can be viewed and cleared from this screen. Only manually assigned samples or controls need to be cleared from racks.

Figure 4.2 Rack Status Screen

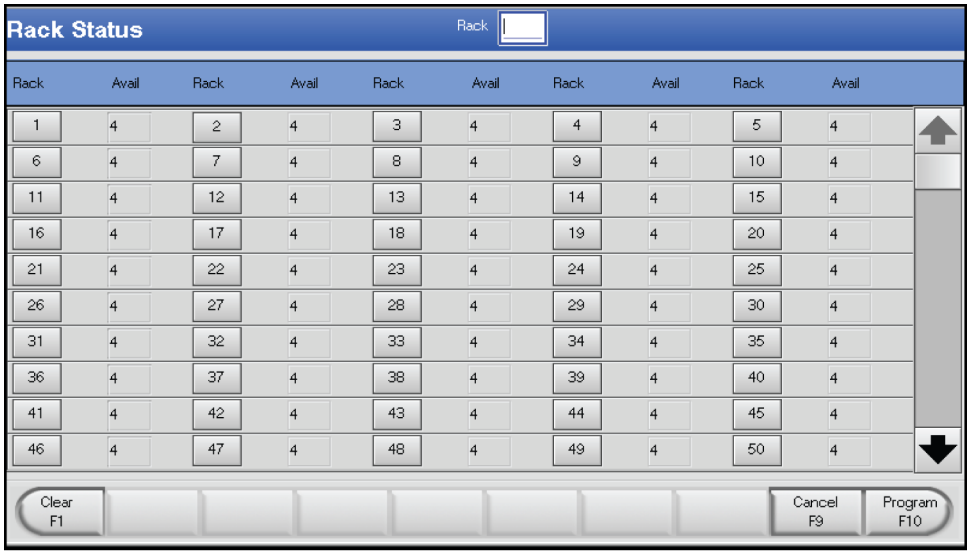

E007664S.PNG

1 At the workstation console, select **Samples** from the menu bar.

2 Select **Racks F8**.

3 Select a rack or type a specific rack number in the **Rack** field to view Sample Status. Refer to Table 4.3, for a description of each Sample Status. Press (Page Up) or (Page Down) to view additional rack numbers.

4 Clear racks as necessary:

- Select **Clear F1**.
- Type rack or sample ID and select **OK**.
- Select **OK** again to confirm deletion of sample programs.

Table 4.3 Sample Status Designations

Sample Status	Meaning
In Progress	Testing or processing is in progress.
Incomplete	System is unable to complete at least one test.
Complete	All tests are complete.
Reserved for Cal	Rack/Position is assigned to a calibrator.
Sample Required	Sample is programmed but not yet run by the system.
Rerun	Test rerun has been requested for the sample.
Removed	Sample has been unloaded but some tests are still being processed.
Manual Assign	Sample ID has been manually assigned to a Rack/Position.

Identify Samples

Introduction

You can identify samples by a sample ID or by a rack/cup position or both. A sample ID is a unique name used to identify the sample. Sample IDs may be specified with a maximum of 15 alphanumeric characters.

Rack and Position Mode and Bar Code Mode setup options affect where the cursor starts within sample programming. If rack and position priority is chosen during system setup, the cursor begins at the **Rack** field. If Bar Code Priority is chosen, the cursor appears at the **Sample ID** field, skipping the rack and position assignment.

Refer to Bar Code Setup for additional information on setting up sample identification features.

If a rack has a readable bar code and a manual rack position assignment for the same sample position, the system verifies that the bar code and the manual assignment match. If there is a discrepancy, the rack is offloaded and the operator notified with a message. If the bar code and the manual assignment agree, the rack remains on the carousel and is processed.

Limitations

The instrument stores up to 10,000 unique sample IDs. When this limit is exceeded, the system overwrites the oldest sample program. Duplicate sample IDs are not allowed. If sample IDs are reused by the laboratory, set the Maximum Sample Program Age to help alert you to conflicts.

⚠ WARNING

If your Host (LIS) or normal workflow requires the reuse of sample IDs, the sample programming should be cleared from the workstation console at a time interval that is less than the shortest time of sample ID reuse. The Integrated Workstation over-write feature is not sufficient for successfully reusing sample IDs. If this warning is not followed, results from the new request are merged with tests from incomplete samples that previously used that ID.

Valid Characters for Entries

Valid and Invalid characters for entries are listed in the table below:

Table 4.4 Valid and Invalid Entries

Type of Entry	These are Valid ASCII Character Codes...	Except for These Invalid Characters and Character Codes...
Sample ID	33 thru 126	A *space* and $, ; * ? [ ] \^ | &
Other	32 thru 175	ASCII Character Codes 44 and 127

NOTE The system automatically converts lowercase letters into uppercase.

Create Sample IDs

When creating sample IDs, use a format that distinctly differs from that used for Calibrator and Control IDs. This prevents the reporting of erroneous results due to calibrators or controls being run as patient samples, or patient samples run as calibrators or controls.

Examples:
Calibrator Bar Code ID: MULTICAL
Sample Bar Code ID: 0000001

Program Samples

Samples with Host (LIS) Programming

Bar Coded Samples

If the sample is bar coded and has been programmed in the Host, no programming is required at the Integrated Workstation.

Generally, you need not clear previous sample programming before you place a bar coded sample on the instrument. If your lab reuses sample IDs, however, you must clear previous programming.

Assign Rack and Position Manually

If the sample is not bar coded, or the bar code is unreadable, you must manually assign a rack and position.

1 Select **Samples** from the menu bar.

2 Select **Racks F8**.

3 Select a rack with an open position or enter the rack number.

4 Type the sample ID into the selected rack/position.

5 Select **OK** to accept the assignment.

6 Select **Program F10** to return to the Program Sample screen.

7 Place the samples into assigned rack positions.

Program Samples Manually

If you have no Host, if the Host is not available, or if there is no sample programming, you must program samples manually.

1 Select **Samples** from the menu bar.

2 If the sample has a readable bar code:

- Type the sample ID.

If the sample has no bar code or bar code can not be read:

- Type the sample ID.
- Type the rack and position in the **Rack** and **Pos** fields.

3 If the sample is stat, select the **STAT** check box.

4 Select **Sample Type** from the pull-down menu.

- If you select **Timed Urine**, the system displays the Timed Urine Calculations dialog box. Enter the fields and select **OK** to return to the Program Sample screen.

5 If you need to enter comments, select **Sample Comment** from the pull-down menu.

6 To enter Demographics, select **Demog F2**. Type the information provided and select **Sample F1** to return to the Program Sample screen.

NOTE You must enter newborn age in hours. The system does not recognize 0 days.

7 Select each assay and/or select a panel. To access additional chemistries, use the up and down arrows to move to other pages.

8 Select **Next F10**.

9 To program additional samples, repeat Steps 2-8.

10 Place the samples into assigned rack positions.

Add Tests or Rerun a Sample

The Rerun option allows reanalysis of any test, sample or rack that is complete and has valid results. When rerun, the results obtained will overwrite existing results; original results will no longer be available. When the rerun sample is complete, a collated report of all final test results for the sample will print with the rerun chemistries designated by an (R) next to the new result.

1 Select **Samples** from the menu bar.

2 Select **Rerun F6**.

3 Type the sample ID, rack, or rack and position for rerun. You can program one or more samples to rerun.

4 Select tests to rerun:

- To rerun all completed tests, press **All**.
- To add or rerun specific tests, press **Select**. All previous programming is highlighted. Deselect tests you do not want to rerun. You can also select **Remove F8** to remove all previous programming, and then select the tests you do want to run. Select **Save F10** to accept programming and exit screen.

Rerunning Samples Through CTS

Beckman Coulter does not recommend repiercing capped tubes. A CTS Tracking database monitors pierced tubes. The sample ID stays in this database for seven days for a tube that has been pierced.

- If you run a tube again, it will not be pierced again.

- If you're using a new, unpierced tube with this particular sample ID, the system will not pierce it. You must remove the cap.

When you clear a particular sample ID manually through Sample Programming, the CTS Tracking information is also cleared for that sample ID.

- If you rerun a previously pierced tube that has been cleared, the system will repierce it. You must remove the cap.

NOTE If a sample ID is cleared at the Host (LIS), the sample ID is NOT cleared in the CTS Tracking database.

If you need to clear the CTS database (for example, if the Host system's counter rolls over and uses the same sample IDs again), clear the sample IDs at any of the instruments connected by the tracking network.

Additional Programming Information

DxI Communication

If the Integrated Workstation loses communication with the DxI analyzer, All DxI test in progress are flagged with TEST STOPPED and the sample status may become INCOMPLETE. If the communication loss is transient and not due to a system failure, the DxI may continue to process these tests. When communication is restored, the Integrated Workstation will receive the results, and the sample status will become COMPLETE if appropriate.

Exercise caution when modifying programming for samples with DxI tests in progress when communication has been lost with the DxI analyzer. If you clear the program, the Integrated Workstation will not be able to receive results for any current DxI tests for the sample. If possible, do not make any programming changes until communication is restored and the DxI analyzer has completed processing tests for the sample.

Chemistry Status

Figure 4.3 Program Samples Screen

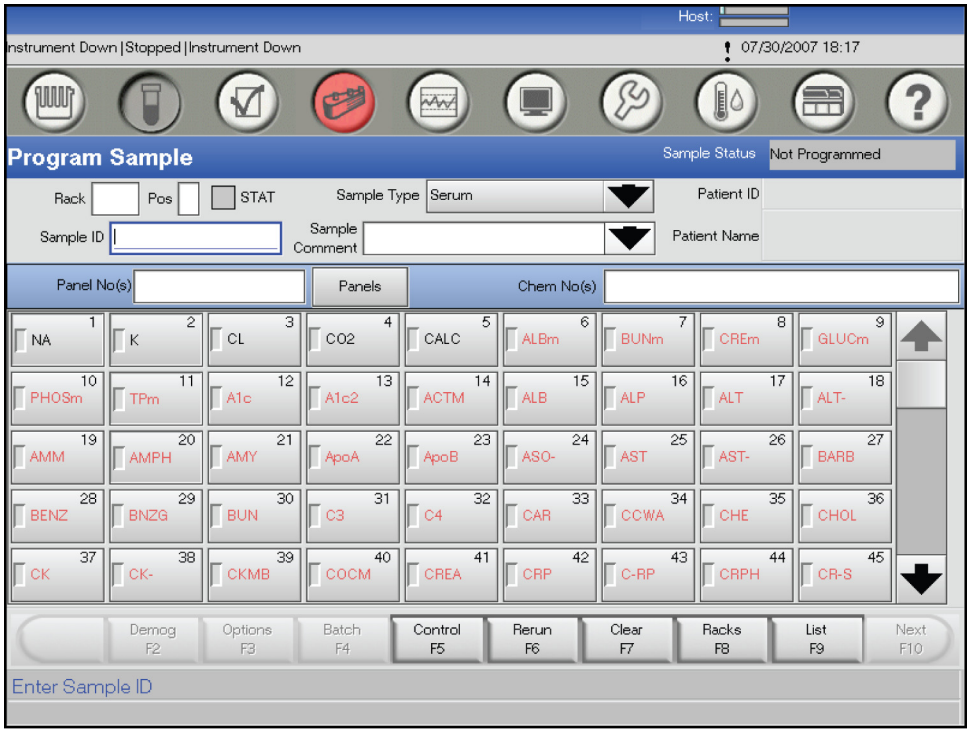

E007665S.PNG

- The chemistry name appears in *red* when the test cannot be run. A test cannot be run when the reagent is not loaded, or when the reagent or calibration status does not permit it to run. Refer to Reagent and Calibration Status Warnings for the reason the test cannot be run.
- The indicator bar turns from gray to *blue* when you select a chemistry.
- The indicator bar turns from blue to *yellow* when the test is set for manual ORDAC (Over Range Detection and Correction). See Program a Manual ORDAC.

Sample Options

As you are programming samples, you have several options available through the **Options F3** function button:

- Enter an Off-line Dilution Factor
- Program a Manual ORDAC
- Program Samples for Serum Index
- Program Sample or Chemistry Replicates

Enter an Off-line Dilution Factor

To apply an off-line dilution factor to the results of a specified sample, select **Options F3** and type the dilution factor in the **Off-line Dilution Factor** field. The dilution factor represents an off-line

dilution that you have prepared. The default dilution factor is 1X. The system multiplies each result for the sample by the dilution factor you entered.

NOTE The dilution factor remains as part of the sample programming and must be removed if you perform additional testing on the undiluted sample. However, if you add any tests at the Host, the dilution factor will be reset to 1.

IMPORTANT The system also multiplies results that include the "less than" (<) sign. For example, a CRP result with a sample dilution of 4, that should be reported out as "<0.5", is reported out as "<2.0".

Program a Manual ORDAC

For samples with analytes of known concentration that exceed the analytic range, you can select the manual ORDAC feature. To program a manual ORDAC, select **Options F3** and select the **Manual ORDAC** check box next to the appropriate chemistry.

ORDAC compensates for extremely high concentrations either by taking a smaller sample volume, or by diluting the sample online online. Select manual ORDAC on the Sample Options screen to run the test in ORDAC the first time it is run. Tests selected for Automatic ORDAC are run undiluted first and then rerun using ORDAC if recovery is out of range. Auto ORDAC is configured during system setup.

ORDAC is NOT available for uric acid that is run on urine samples.

NOTE All ORDAC results are designated in the instrument code section on the appropriate results report.

Program Samples for Serum Index

To program specified samples for serum index, select **Options F3** and select the **Serum Index** check box.

Program Sample or Chemistry Replicates

To program a number of replicates for a specific chemistry, select **Options F3** and enter the number of replicates in the **Reps** field next to the chemistry name.

To program a number of replicates for all tests programmed for a sample ID, select **Options F3** and enter the number of replicates in the **Sample Replicates** field.

Batch Programming

Use batch programming to program multiple samples with the same tests, sample type, and programming options. Any panel, comment, demographics, sample options, sample type, or chemistry programmed will apply to all sample positions designated within the batch. You can edit this information, and the sample identification and description of each sample, individually after the batch programming is completed.

Use the following procedure to perform batch programming.

1 Select **Samples** from the menu bar.

2 Select the tests, sample type, and any other data that is common for all samples in the batch, including sample options information.

3 Select **Batch F4**. The system displays a list of available racks for batch programming. You can also clear racks from this screen.

- To clear racks, continue with Step 4.
- To batch program, continue with Step 5.

4 To clear racks, type the specific rack numbers in the **Rack(s)** field and select **Clear**. A message appears, and verifies that the racks will be cleared. Select **OK** to clear the racks and return to the Program Batch window.

5 You can program a batch with sample IDs only, or both sample IDs and rack/position designations, as follows:

Identification	Procedure
Rack/position with sample IDs	• Type rack numbers and number of samples desired in the batch. • Select **OK** and type specific sample IDs.
Sample IDs only	• Select **SmpID Only**. • Type specific sample IDs. • Select **Rack** to assign specific racks to the IDs or leave rack/positions empty.

6 To end sample ID entry and to save the batch programming, select **End**.

NOTE You can enter patient demographics for a particular sample ID at any time from the Program Sample screen by typing a sample ID in the **Sample ID** field and selecting **Demog F2**.

Process Samples

1. Load tubes in a rack. If the samples have bar codes, make sure the bar code labels are visible through the slot on the same side of the rack as the rack bar code label.

2. For tubes validated for cap piercing (see Sample Tubes Validated for Cap Piercing), check the caps for visible blood.
   - If blood is present, clean the caps with a cotton tipped applicator stick moistened with deionized water.

   For tubes not validated for cap piercing, remove the caps.

3. Place the rack in the UCTA load tray with the rack bar code label to the right. Place priority samples in the load tray first.

4. For a STAT sample when the system is running and there are other racks in the UCTA load tray:
   - Press the UCTA **PRIORITY** button.
   - Move the racks so the STAT rack can be placed in front of the other racks.

5. Press **RUN**.

Clear Samples

Introduction

If your laboratory reuses sample IDs, you must clear samples. When racks have been used for manually assigned positions, you must clear the racks for reuse. See Rack Status for procedure.

You cannot clear calibrator assignments from within Sample Programming.

IMPORTANT When you clear data, first view the load list for the intended range of samples to verify exactly what will be cleared. The samples recalled on the load list will be cleared.

Range of Sample IDs

The system can retrieve a range of Alphanumeric or Numeric sample IDs for the List, Clear, and Recall functions.

Numeric sample IDs:

- Are listed in numeric order.
- You must include leading zeros in the **From** field. For example, 1 thru 1000 will not include sample 0099, but 0001 thru 1000 will.

Alpha or Alphanumeric sample IDs:

- Are listed in dictionary order. For example A, AB, B...
- Numbers come before letters. For example 1, 900, 1A, A...
- You must include all characters in the **To** field. For example, range A thru Z would not include ZEBRA, but range A thru ZZZZZZZZZZZZZZ would.

IMPORTANT Do not mix a pure numeric entry with an alphanumeric entry. For example, 0 through 1A includes all numeric samples.

Procedure for Clearing Samples

1. Select **Samples** from the menu bar.

2. Select **Clear F7**.

3. You can clear samples by sample ID(s), Rack/Position, or by Date/Time created. Type the specific criteria for deletion.

   IMPORTANT Clearing Rack/Position does not clear programming for sample IDs that have been programmed in those positions. Samples must be cleared by sample ID. However, when you clear by sample ID, it does clear the rack/position in which the sample ID was located.

Deletion Criteria	Procedure for Sample Clearing
Sample ID	• Type the sample ID(s) to clear. You can enter single or multiple IDs. Use a comma (,) to separate a list of IDs.
Range of Sample IDs (Refer to Range of Sample IDs in this chapter for additional information.)	• Type the first sample ID in the **From** field. • Type the last sample ID in the **To** field.

Deletion Criteria	Procedure for Sample Clearing
Rack/Position(s)	• Type the Rack/Position(s) to clear. You can enter single or multiple racks. — If you only specify the rack, the system clears programming for all positions in that rack. — You can enter a range of racks. Separate rack numbers by a comma to define a series and/or by a dash to define a range (*Example*: 1,2, 5-8)
Time/Date Programs Created	• Type the time and date range of samples to clear.

4 Select **OK** to clear the selected samples. The system displays a confirmation screen.

5 Select **OK**.

Results Recall

Introduction

Use Results Recall to recall, review, update, and print patient and control results. You can recall, view, and print results by:

- individual Sample ID or a list of Sample IDs (See Range of Sample IDs.)
- rack and position
- Patient ID
- Patient Name or
- run date and time.

Limitations

The system keeps a maximum of 150,000 results and 10,000 sample programs. When these limits are exceeded, the system chronologically overwrites existing results.

When you clear a sample program by sample ID, you cannot recall results by sample ID. You can still recall results by patient ID or patient name.

To avoid retrieving inconsistent sample data, recall results using sample ID or verify the sample ID when you recall results by rack and position.

If you create a control program at the DxI console, the results will NOT be associated with a control program on the Integrated Workstation. The system will perform all QC processing and will display any applicable notes, but the software subsystems that operate on sample programs, such as Sample Programming and Results Recall, will not be able to retrieve and display the results. The results will only be available through the Quality Control function on the workstation console.

Procedure for Recalling Results

1 Select **Results** from the menu bar.

2 You can recall results by sample ID(s), Rack/Position, Patient ID, Patient Name, or by Run Date/Time. Type the specific criteria.

Selection Criteria	Procedure for Recalling Results
Sample ID	• Type the sample ID(s) to recall. You can enter single or multiple IDs. Use a comma (,) to separate a list of IDs.
Range of Sample IDs (Refer to Range of Sample IDs in this chapter for additional information.)	• Type the first sample ID in the **From** field. • Type the last sample ID in the **To** field.
Rack/Position(s)	• Type the Rack/Position(s) to recall. You can enter single or multiple racks. — If you only specify the rack, the system recalls results for all positions in that rack. — You can enter a range of racks. Separate rack numbers by a comma to define a series and/or by a dash to define a range (*Example*: 1,2, 5-8)
Patient ID	• Type the patient ID to recall. You can enter only one patient ID. • If the patient has more than one sample ID in the system, select the Multi-Sample Report check box to display results for all samples.
Patient Name	• Type the last name of the patient to recall. You can include a first name and middle initial to narrow the search, but you must enter a last name. The system does not search by first name only. You can request only one patient name at a time.
Run Date/Time	• Type the date and time range of results to recall.

3 Select a function button from the bottom of the screen.

- **Results F1** - to view results on the screen.
- **Sum F7**- to send statistical summary to printer.
- **Host F8** - to send results to the Host.
- **Print F10** - to send results to a printer.

Display Recalled Results

When you select **Results F1** to view results on the screen (see Procedure for Recalling Results), you have the following options:

- **Disk F1** - to copy absorbance versus Time data to floppy disk.
- If there are tests running, **Recall F2** - to update the sample on the screen with new results since the sample was first shown.
- **ABS F3** - to view the Absorbance versus Time plot.
- **Edit F4** - to edit.
- **Host F5** - to send QC results to the Host.
- **Host F6** - to send patient results to the Host.
- **Print F7** - to send results to a printer.
- **Prev F8** - to view a previously shown sample.
- **Next F9** - to view other samples if more than one sample was recalled.
- **Done F10** - to return to the Recall Results By screen.

Edit Critical Rerun Result

Introduction

When you rerun a sample using Critical Rerun, the two results are shown in the Recall Results screen. The first result is always listed at the top and the rerun result is listed under the first result. You can delete one of the results and keep the other result. Only one of the two results can be deleted.

For Critical Rerun Result with DAT samples, printed results have a positive or negative flag for all results. On the screen, the first result is flagged positive or negative. The second (rerun) result, however, has no interpretation; only a rate and a critical rerun remark are shown. Use the printed report to compare the two interpretations. If they are both positive or both negative, delete the second result.

Delete Critical Rerun Result

Follow the steps below to delete one of the two results of a sample which was rerun with Critical Rerun Result.

1. From the Recall Results By dialog box, select the results to be viewed, as described in Procedure for Recalling Results, Step 2.
2. Select **Results F1** to view requested samples.
3. Locate the desired sample that has two results. Select one of its results to delete.
4. Select **Edit F4** to delete the selected result.
5. Type the operator ID initials.

   Select **OK** to return to the Delete Results dialog box; select **OK** again to return to the Recall Results dialog box with the result deleted.

   NOTE The deleted result with the initials of the operator are sent to an Event Log called Deleted Results.
6. Select **Done F10** when completed.

Print Recalled Results

All recalled results may be printed.

1. Select **Results** from the menu bar.
2. To print using the default report format:
   - Go to Step 4.

   To print using Patient Multi-Sample report format
   - Continue with Step 3.
3. If you selected the Patient Multi-Sample Report check box, enter the specific Patient ID. Select **Print F10**.

   Select samples to be compiled into the report.

   All selected Patient Results are compiled into a single report.

4 From the Recall Results By dialog box, select the results to be viewed, as described in Procedure for Recalling Results, Step 2.

5 Select **Print F10**. The selected results are printed in the format selected in System Setup.

NOTE Patient Multi-Sample reports print a maximum of 15 chemistry results and 5 special calculation results per page. Additional results print on subsequent pages.

Send Results to the Host (LIS)

Introduction

Results may be sent to the Host in two ways:

- Recall and send whole groups of data.
- Recall and send individual sample data.

Send Data

1 Select **Results** from the menu bar.

2 To send whole groups of data:

- Type the range of racks, Sample IDs, or run dates/times.
- Select **Host F8**.

To send individual sample data:

- Type the Sample ID, patient ID, run date/time or rack/position.
- Select **Host F8**.

Absorbance Versus Time

To get data to help troubleshoot completed chemistry results, use the Absorbance versus Time feature.

Recall Data

1. Recall the results of the desired sample (use the Results Recall criteria as described in the Procedure for Recalling Results, Step 2).

2. To output a file to external media (USB or diskette), select **Copy F1**.

   NOTE Absorbance Versus Time cannot be saved to a CD.

   When you download information to USB, the DxC system uses the same file names (avt0001.dat) each time it downloads data. It will overwrite existing files on a USB device. To prevent overwriting the files on the storage PC, create a directory structure, for example:

   - DxC Absorbance Versus Time-Instrument Name
     - Date 1
     - Date 2
     - Date 3

   Store the identically-named files under the individual dates.

3. When the system displays the results of the desired sample, select the desired chemistry(ies). Selected chemistries are highlighted.

4. Select **ABS F3**.

   NOTE The Absorbance vs. Time Plot is shown for the first selected chemistry.

5. To see the Absorbance Plot Summary Data:

   - Select the down arrow.

   To see the Absorbance vs. Time Table:

   - Select the **Table** tab.

6 To output Absorbance vs. Time Plot and Absorbance vs. Time Table to a printer:

- Select **Both**.

To output either Absorbance vs. Time Plot or Absorbance vs. Time Table to a printer, depending on which is on the screen:

- Use the **Plot** or **Table** tab at top of screen to go from the plot to the table.
- Select **Print**.

Statistical Summary Report

Introduction

The Statistical Summary Report feature allows the user to select a range of samples that will produce a calculated mean, Standard Deviation, and Coefficient of Variation for a group of selected samples. The information is automatically printed out on a report. This can be valuable when assessing the performance of the system, or as an aid in establishing population variances.

Print Statistical Summary

1 Select **Results** from the menu bar.

2 Type the range of desired results, as described in Procedure for Recalling Results, Step 2.

NOTE The maximum range of samples that can be recalled is 100. If there are more than 100 samples in the range, the following message appears:
"*Exceeds maximum limit. Not all samples will print.*"

3 Select **Sum F7** from the Recall Results By dialog box.

A Statistical Summary Report is printed.

CHAPTER 5

Quality Control

Introduction

Quality controls are samples that are used to monitor system performance and verify calibration. The system presents Quality Control (QC) data in both a summary format and in a chart format. It applies Westgard QC rules to the data to help determine assay and system reliability.

Run QC samples when your laboratory protocol indicates that control material should be analyzed. Beckman Coulter recommends a daily analysis of at least two levels of control materials. You should also run controls with each new calibration, each new lot of reagents, and after specific maintenance or troubleshooting activities. Your laboratory should determine its own control frequency based on the CLSI (formerly NCCLS) Guideline C24-A3 STATISTICAL QUALITY CONTROL FOR QUANTITATIVE MEASUREMENT PROCEDURES.

Perform all QC definition at the workstation console.

DxI Restrictions

QC Definition is view-only at the DxI console. You must perform QC Definition at the workstation console. You can view Sample ID (Control Name), Tests, Units, Mean and SD on the DxI console. Control Expiration Date is not defined on the DxI console or DxI reports.

QC definitions and QC data points must be deleted at the workstation console. They cannot be deleted at the DxI console. The DxI Review Chart and Data, Compare Chart, and Delete Comparison functions are available.

You can flag controls at the workstation console, using DxC flags, only. You cannot filter on flagged controls at the DxI console.

If you program the DxI QC Rerun feature through the DxI console, you must load the controls directly onto the DxI SPU, not the UCTA. You can rerun QC from the DxI console for a specific DxI pack and pipettor.

If you manually program a DxI control at the DxI console, the results are not available through Results Recall on the workstation console. You can view them through the Quality Control function on either the DxI console or the workstation console.

Control Definition Limitations

NOTE Do not include spaces in Control Names for QC controls that include DxI assays. Control Names with spaces will not run on the DxI analyzer.

The Integrated Workstation lists controls by the control number to which they are assigned. The DxI system does not assign control numbers. The Integrated Workstation sends control definitions containing DxI assays to the DxI system in the order they were defined, which may not be the same order in which they appear on the workstation console.

For example, if you define:

Step 1: Control Number 1 (workstation console) - CardiacControllevel1
Step 2: Control Number 3 (workstation console) - CardiacControllevel3
Step 3: Control Number 2 (workstation console) - CardiacControllevel2

The workstation console will show:

1 CardiacControllevel1
2 CardiacControllevel2
3 CardiacControllevel3

But the DxI console will show:

CardiacControllevel1
CardiacControllevel3
CardiacControllevel2

QC definitions and QC data points must be deleted at the workstation console. They cannot be deleted at the DxI console. The DxI Review Chart and Data, Compare Chart, Delete Comparison, and Print functions are not available.

Corresponding QC Field Names

Workstation Console	DxI Console
Control Name	Sample ID or Control
Lot Number	Patient ID/Lot Number or Control Lot

Process QC Procedure

1. Define a Control, if necessary.
2. Program QC, if necessary.
3. Run Control Samples.
4. Manage Results.
5. Archive Results.
6. Prepare Quality Assurance Program (QAP) data, if necessary.

Define a Control

Introduction

Before you process a control, it must be defined on the system. You can define up to 100 controls. To save a control definition, you must enter a control name, lot number, QC file number, sample type, and at least one chemistry selection per control. You can define up to 175 chemistries per control.

You can edit controls to add or delete individual chemistries, and modify the mean, SD, and constituent codes.

Special or Unique Control Samples

Include only compatible chemistries together in the same control definition. Create separate control definitions for pre-treated samples (for example, IBCT), diluted samples, samples of different sample types, or for assays that are not run on a regular basis.

Control Identifiers

Control identifiers are fields used together to identify a specific control. This information includes:

- Control Name
- Control Lot
- Sample Type

Define a Control

1 Select **QC** from the menu bar.

2 Select an available control number from the QC screen.

3 Select **Define F2**.

4 Type the name of the control in the **Control Name** field. The control name or the lot number must be unique. A control with only DxC chemistries can have up to 20 alphanumeric characters in the name. A control with any DxI assays can have up to 15 alphanumeric characters in the name.

NOTE Do not enter the following characters in the **Control Name** field:

' : " $ & * ; ? [\ ] ^ |

Do not enter spaces for Control Names that include DxI assays.

5 Type the control lot number in the **Control Lot #** field. The control lot number has a maximum of 12 alphanumeric characters.

6 Serum Index is an optional function. If serum index is applicable to your control material, select the **Serum Index** check box.

For additional information on serum index, refer to the Synchron Clinical Systems *Chemistry Reference Manual*.

IMPORTANT When you define a control, you must select the Sample Type **before** selecting the chemistries (step 8). If you do not, the default sample type is Serum.

7 Move to the **Sample Type** field. Select the sample type from the pull-down list.

8 Select **Chems F1** to display a list of configured chemistries. To add or remove a chemistry, select it from the **QC Chemistries** list and add it to the **QC Selected Chemistries** list, or select it from the **QC Selected Chemistries** list and remove from the list. Use the scroll bar to access all chemistries.

9 Select **OK** to save the chemistry selections and return to the Define/Edit Controls screen.

10 Type the following information in the appropriate fields for all chemistries shown:

Field	Description
QC File Number	Type a QC file number for each chemistry. • The QC file number must be a unique 3-digit number from 001 to 999. • If a QC file number has already been assigned, the system will not accept it a second time.
Assigned Mean	Type the assigned mean for the chemistry level and lot. The system adds zeroes to the end of the number to show maximum precision (X.XXX).
Assigned SD	Type the assigned standard deviation, ±1SD. The system adds zeroes to the end of the numbers to show maximum precision (X.XXXX).
Constituent Code	The constituent code is an optional, secondary method to identify an analyte.

11 Select **Done F10** to leave the definition screen and save the control. If the control definition is not complete, the system displays a warning message specifying the missing information.

- If a chemistry is missing a QC File Number, you can select **OK** to delete the chemistry, or **Cancel** to return to the Define/Edit Controls screen to add the file number.
- If a chemistry has no Mean or SD, you can select **OK** to delete the chemistry, **Save** to save the chemistry with a Mean of 0.0000 and an SD of 99999, or **Cancel** to return to the Define/Edit Controls screen to add the information.

If you need to assign bar code labels to the control, continue to Control ID Assignments.

Control ID Assignments

Introduction

Control IDs are the bar code labels assigned to controls. You can define up to eight bar codes per control. Control IDs are required for Auto Generation of Control.

Bar Code Assignment

1. Select **Control ID F2** from the Define/Edit Controls dialog box to display the Control ID dialog box.

2. You can type up to eight unique control IDs with a maximum of 15 alphanumeric characters. Press (Tab) after each entry to move between fields.

   Control IDs should be as descriptive as possible. Use a format for your *Control* Bar Code IDs that is distinctly different from *Sample* IDs, to prevent confusion between the two. This will prevent the reporting of erroneous results should controls be run as patient samples, or patient samples be run as controls.

   Example:
   Control Bar Code ID: SYNCHRON01
   Sample Bar Code ID: 0000001

3. To print the Control ID Assignment list, press the (PrtScn) key.

4. Select **OK** to exit the screen and save the control IDs.

Edit a Control Definition

Introduction

You can edit the assigned mean, SD, constituent code, and control IDs of a previously defined control. You cannot edit the QC File Number, lot number, sample type, or control name associated with any defined control.

Edit Precautions

- Changing the mean and/or standard deviation may affect flagging of subsequent QC statistical data.
- If you change the previously defined mean or SD to zero, the system will set the mean to zero, and the SD to 99999.
- The system will compare subsequent data points to the new mean and SD.

Modify Assigned Mean, Assigned SD or Constituent Code

1. Select **QC** from the menu bar.
2. Select the control number beside the **Control Name** and select **Define F2**.
3. Select the field for modification.
4. Type the modified assigned mean, standard deviation (1 SD), or constituent code.
5. The system displays the Define/Edit Controls dialog box to determine how the changes will be applied to subsequent data. Select the desired option.
6. The Define/Edit Controls screen displays the changes you have made.

   NOTE If you modified the assigned mean and SD and did not delete the existing data points, all previous flagging will remain based on original assigned mean and SD.

7. Select **Done F10** to exit the Define/Edit Controls dialog box.

Add Chemistry(ies)

1. Select **QC** from the menu bar.
2. Select the control number beside the **Control Name** and select **Define F2**.
3. Select **Chems F1** to display a list of configured chemistries. To add a chemistry, select the chemistry from the **QC Chemistries** list and add it to the **QC Selected Chemistries** list. Use the scroll bar to access all chemistries.
4. Select **OK** to save the chemistry selections and return to the Define/Edit Controls screen.

5 Type the following information in the appropriate fields for all chemistries shown:

Field	Description
QC File Number	Type a QC file number for each chemistry. • The QC file number must be a unique 3-digit number from 001 to 999. • If a QC file number has already been assigned, the system will not accept it a second time.
Assigned Mean	Type the assigned mean for the chemistry level and lot. The system adds zeroes to the end of the number to show maximum precision (X.XXX).
Assigned SD	Type the assigned standard deviation, ±1SD. The system adds zeroes to the end of the numbers to show maximum precision (X.XXXX).
Constituent Code	The constituent code is an optional, secondary method to identify an analyte.

6 Select **Done F10** to leave the definition screen and to save the control.

Remove Chemistry(ies)

NOTE You cannot remove chemistries that have any programming. You must first clear programming for the control. See Delete a Chemistry.

1 Select **QC** from the menu bar.

2 Select the control number beside the **Control Name** and select **Define F2**.

3 Select **Chems F1** to display a list of configured chemistries.

4 To remove chemistries, select the chemistry from the **QC Selected Chemistries** list. Use the scroll bar to access all chemistries. The system displays a confirmation message.

5 Select **OK** to confirm your choice.

6 Type an operator ID of 1 to 3 alphanumeric characters and press (Enter).

7 Select **Remove** to remove the chemistry.

8 Repeat Steps 4-7 to remove additional chemistries.

9 Select **OK** to save the chemistry selections and return to the Define/Edit Controls screen.

10 Select **Done F10** to save the control and exit the Define/Edit Controls screen.

Review a Control Definition

1 Select **QC** from the menu bar.

2 Select the control number.

3 Select **Review F1**.

The system displays all current information and selected chemistries, including serum indices.

- Select **Control ID F2** to view the control IDs.
- Select **Delete F3** to clear a control.
- Select **Print F9** to print a control definition.
- No cursor is visible because you cannot change any information.

4 Select **Done F10** to exit the Review Controls screen.

Print QC Ranges

You can print QC ranges for all defined controls.

1 Select **QC** from the menu bar.

2 Select the control number.

3 Select **Print F10**.

4 To print additional control ranges, repeat Steps 2 and 3.

Delete a Control

Introduction

You can remove previously defined controls from the system, and clear QC ranges and applicable data for current QC data. You can also delete controls through the Define/Edit and Review QC functions.

You cannot delete controls with any programming. You must first clear the control ID at the Program Sample screen.

Delete a Control

1 Select **QC** from the menu bar.

2 Select the control number to clear.

3 Select **Delete F3**.

4 The following message appears to confirm the clearing of the selected control:
"*All QC Files for Control will be deleted. Archiving is suggested. Delete this control?*" Select **OK** to delete the control.

5 Type an operator ID of 1 to 3 alphanumeric characters and press Enter.

Program QC

Auto Generation of Control

When you enable Auto Generation of Control and Control ID Assignments, the instrument automatically runs chemistries that are:

- Defined for the control
- Loaded and calibrated

- Contain sufficient volume to run the controls.

These controls do not require any additional programming.

Through Auto Generation of Control, you can also enable an automatic Multiple Cartridge option for DxC chemistries. Multiple Cartridge automatically runs all cartridges onboard and runnable for any chemistries for an auto generated control.

To autogenerate controls through the DxI SPU (Sample Presentation Unit), load sample containers labeled with the Control ID into the SPU.

NOTE To program a specific chemistry when Auto Generation of Control is enabled, use the Manually Programming Control Samples procedure.

Manually Programming Control Samples

1. Select **Samples** from the menu bar.

2. Clear the selected control ID.
   - Select **Clear F7**.
   - Type the control ID into the **Sample ID(s)** field. You can enter multiple IDs, separated by commas.
   - Select **OK**.
   - Select **OK** to confirm.

3. Select **Control F5**.

4. Select the number next to the **Control Name** field to select from predefined Control Names. If necessary, use the scroll bar to view additional Control Names.

   The Program Control screen opens. Make sure the Control Lot number on the screen is the same as the lot number on the Control bottle.

5. Type the rack/position number if the bar code is not available, or select the control ID from the pull-down menu.

6. Select chemistries to run.

   NOTE For DxC only, the system automatically runs the oldest cartridge onboard for the selected chemistry. Specific cartridges (other than default) may also be selected. Select **Rgt Cart F8** to display the available cartridges. Then select the desired cartridges and select **OK**.

7 Select **Save F10** to save the control programming and return to the Program Sample screen.

IMPORTANT If the system cannot complete all tests programmed for the control (for example: calibration required, cal time exceeded or disabled), the next time you run the control ID, the system will run only the incomplete tests. Manually-programmed QC control IDs must be cleared manually.

8 Load the controls into the UCTA load tray and push the UCTA **Run** button.

Run Control Samples

Introduction

When you have defined the control, you can run the control sample with or without bar code labels. The following procedure describes how to run a control sample with bar code labels. To run a sample without bar codes, see Manually Programming Control Samples.

Run Control Samples With Bar Code Labels and Auto Generation of Control Enabled

1 Place cups that contain QC material in bar code labeled tubes. All tube bar code labels must be visible through the slots on the same side of the rack as the rack bar code label.

2 Place rack(s) in the UCTA load tray with the bar code labels to the right.

3 Press **RUN**.

NOTE If all tests programmed for an Auto Generated control ID do not complete testing (for example, reagent not onboard, calibration required, cal time exceeded or disabled), the next time you run the control ID, the system will Auto Generate all tests for the control and run them again. You must manually clear any manually programmed control ID that is incomplete before you run the sample again, in order to Auto Generate all tests for the control.

Manage Results

Introduction

You can review information from current QC data on the hard drive, or archived QC data on external media. You can print archived QC data, but you cannot change it. You can review, delete or print current QC data.

QC File List

Introduction

Use QC File List to view or print a list of QC files by control name, chemistry name or QC file number. You can display the QC File List from either the hard drive or external media.

QC File Definition

A QC file is a grouping of control information for a particular chemistry in a particular control (for example, control lot number, mean, SD, cumulative sums).

The QC file number is the unique number you assign to a particular QC file. Refer to Define a Control in this chapter. A control can be associated with one or more QC files.

Display QC File Lists

1. Select **QC** from the menu bar.

2. Select **List F4**.

3. If you did not select a control, the system displays all chemistries in all controls, with chemistries in alphabetical order. The QC File list appears with all defined controls listed in ascending order. Use the scroll bar to view additional file numbers.

4. To configure the list:
   - To display the QC File list sorted by chemistry, select **All Chem F1**.
   - To display the QC File list sorted by QC file number, select **All File F2**.

   Use the scroll bar to access additional chemistries if necessary.

QC Summary

Introduction

- The QC Summary report contains a summary of the mean, SD, CV and (N)umber of results for any control run within a specified date interval. The printed report also contains the cumulative mean, SD, CV and (N)umber of accumulated results.
- The QC Summary is also available in the Inter-Laboratory format. To enter the Inter-Laboratory reference number and contact person to be included in the Inter-Laboratory QC Summary, access Report Setup through System Setup.

Accessing the QC Summary

1. Select **QC** from the menu bar.

2. Select the control number for the QC Summary. If necessary, use the scroll bar to view additional controls.

3. Select **Summary F6**.

4. Type a **From** date and a **To** date using the dd/mm/yy format. The default From/To date is the current date. Press (Tab) to move between fields. Select **OK** to view the QC Summary.

   If no data is available, the following message appears:
   "*No Data Available*."

5. To print a hard copy of the summary, select **Print F9**.

   To print the Inter-Laboratory format of the QC Summary, select **InterLab F8**.

6. Select **Done F10** to exit the QC Summary dialog box.

QC Chart (Levey-Jennings)

Introduction

QC Chart shows the results of a control for a specified period in a graphic form, showing the position of data points relative to the assigned mean and standard deviation. The results are listed by date and time, most recent results first. QC Chart is available from either the DxC console or archived files on external media (USB or diskette).

NOTE Color flagging is based on assigned mean and SD at time of run. If assigned mean and/or SD are modified, the flag color will not change.

Accessing QC Charts

1. Select **QC** from the menu bar.
2. Select the control number for the QC chart.
3. Select **Chart F7**.
4. The default **From** date is one month from the current date, and the default **To** date is the current date. Change the dates as necessary. Press (Tab) to move between data fields. Select **OK**.
5. The system lists all the chemistries defined in the **QC Selected Chemistries** list for the selected control. Select all chemistries which should NOT be charted, and then select **Remove**. You can also select **Remove ALL** to deselect all chemistries, then add the chemistries you want to chart.

   NOTE User-defined chemistries which have been cleared cannot be retrieved for QC Chart.
6. Select **OK** to display the QC Chart(s).

   NOTE If no data exists for the dates entered, the message "*No Data Available*" appears.
7. Select **Next F8** to access all requested QC charts. Each of the requested charts appear in the order of the control chemistry configuration.
8. Select **Print F9** to print a copy of the Chart.
9. Select **Chems F1** to specify a new QC date range and chemistries for charting.

10 Select **Filenum F2** to specify a new QC date range and file numbers for charting.

11 Select **Done F10** to exit the QC Chart dialog box.

QC Log

Introduction

QC Log shows results with information about the relationship of those results to the assigned mean, SD and previous results for a specified date interval. Also shown are data point deletions. You can view or print the QC Log from either the DxC console or archived files on external media (USB or diskette). You can delete data points from the hard disk only. You can add an action log comment from the QC Log screen.

NOTE Color flagging of results is based on assigned mean and/or SD at time of run. If assigned mean or SD is modified, flag color will not change.

Accessing QC Logs

1 Select **QC** from the menu bar.

2 Select the control number.

3 Select **Log F5**.

4 Type a From date and a To date in the date range fields. The default From/To date is the current date. Press (Tab) to toggle between fields. Select **OK** to continue.

5 You can view the QC Log by Chemistry or by Reagent Lot.

The default view is in alphabetical order by chemistry, with most recent data entries first. The Log also shows the date, time run, result, units, and interpretation of the data (relationship of the result to the assigned mean and previous results).

To view the QC Log by Reagent Lot:

- Select **Rgt Lot F2**.
- Type the From and To dates.
- Select **OK** to view.

6 Data is shown by chemistry with reagent lot listed in ascending order.

- Use the scroll bar to access additional data.

  Data are shown as follows:

  — Data points > 2 SD appear in yellow.

  — Data Points > 3 SD appear in red.

  — Data Points > 2 SD with Precision or Accuracy flags appear in red.

Delete a Data Point

IMPORTANT Delete QC data points only when the system is in *Standby* or *Stopped* state. Deleting a chemistry data point from a QC control file that has the same chemistry/control combination actively running on the system may cause the system to update the QC files incorrectly.

1 From the QC Log screen, select the chemistry button for the appropriate data point.

2 Select **Delete F3**.

3 Type an operator ID of 1 to 3 alphanumeric characters and press (Enter) .

4 The following message appears verifying the deletion of the data point:
"*QC data point will be deleted. Archiving is suggested. Delete QC data point?*" Select **OK** to delete the data point.

5 The data point will still appear within the QC Log. It will, however, be marked with the date and time of deletion and the ID of the operator who deleted it. The data point will no longer be included in any calculations or summaries.

NOTE This feature is not available for external media; however, it is not grayed out. If you select the feature for external media, the system does not display an error message.

Add a QC Action Log Comment

1 From the QC Log screen, select the chemistry button for the appropriate data point.

2 Select ***Action F4**.

3 The system displays the QC Action Log. There are 30 characters in the field.

- Write a comment about the data point.
- Select **OK** to save the comment.

An asterisk appears next to the units for data points that have comments.

4 To exit the QC Log screen, select **Done F10**.

NOTE This feature is not available for external media, however, it is not grayed out. If you select the feature for external media, the system does not display an error message.

Quality Assurance Program (QAP)

QAP "Copy To External Media" Feature

Introduction

Use the QAP Copy to External Media feature to copy QC data to external media (USB or diskette). You can then upload this data to the Beckman Coulter website for processing as part of the Inter-Laboratory QC data reduction program.

NOTE QAP data cannot be copied to a CD. Diskettes must be DOS-formatted 3.5 inch.

Create a QAP File

⚠ CAUTION

When you transfer data to external media, all data on the external media created prior to the current day will be deleted. Either use new media for each new data transfer OR be sure that the data on previously used media has already been uploaded to the Beckman Coulter website.

NOTE You can store multiple files created from the same analyzer OR files created from multiple analyzers on the same media, provided that the files are created on the SAME day. Otherwise, the data will be deleted. Data from multiple analyzers will be identified by instrument serial number and sequence number on the external media.

1 Select **QC** from the menu bar.

2 Select the control number containing the data you wish to transfer.

3 Select **Summary F6**.

4 Type the QC Date Range for the data you wish to transfer **FROM** mm/dd/yy **TO** mm/dd/yy.

5 Select **OK** to continue.

6 Select **QAP Copy F7**.

7 Type the two digit month and the four digit year the data represents.

IMPORTANT The system will not accept a date more than 24 months prior to the current date, or any future date.

8 Select **OK** to continue.

9 Follow the prompt on the screen and insert external media into the appropriate drive.

IMPORTANT The system displays a message if an error occurs with the external media.

10 Select **OK** to continue.

11 If the copy is successful, the following message appears:
"*QAP External Media creation complete.*"
Select **OK** to exit this screen.

12 Select **Done F10**.

13 If necessary, repeat Steps 2-12 above to add additional data to the same media.

The external media is now ready for data to be uploaded to the Beckman Coulter website.

NOTE The system downloads files with names such as:
00020901.dat
00020902.dat.

Archive Results

Archive QC

Introduction

The Archive QC function archives control definition (control name, lot number, sample type, QC File number, QC Log selected chemistries, assigned mean and SD, constituent code, and cumulative mean, SD and N) and results to external media (USB or diskette). You can archive QC data from the hard disk only. You can use the archived media to review data, but not to modify QC files. The system must be in *Standby* to archive QC data.

NOTE You cannot archive QC data on a CD.

The QC database can store at least 35,000 results. If a new result is processed and the QC Results database is full, the oldest result related to the same QC File number will be overwritten. If the QC Results database is full and no results are associated with the QC File number of the new result in process, the new result will not be saved. The system displays a message that the new result was not saved. When this dialog box notification appears, it may be appropriate to archive.

When you export information from the DxC console to a USB device, you must transfer the information to a different PC. To view the QC archive files, you must copy the appropriate information from the storage PC and transfer it back to the DxC console.

When you download information to USB, the DxC system uses the same file names (**archaa** and **toc**) each time it downloads data. It will overwrite existing QC Archive files on a USB device. To prevent overwriting the files on the storage PC, create a directory structure, for example:

- DxC QC Archive Data-Instrument Name
  - Date 1
  - Date 2
  - Date 3

Store the identically-named files under the individual dates.

Archive QC

This procedure archives all the controls that are defined.

1. Select **QC** from the menu bar.
2. Select **Archive F8**.
3. Select **1 Archive to External Media**.

4 Type an operator ID of 1 to 3 alphanumeric characters and press (Enter). The system displays the Backup dialog box.

5 To continue the archive process, select **OK**.

6 Insert the external media and select **OK**. If you use a diskette, the system formats the disk, erasing any current data, and then archives the QC data to it. The system displays a message when backup is complete.

7 Select **OK**. The system displays a message asking if you want to delete QC data from the hard disk.

⚠ CAUTION

You can modify QC data on the hard disk only. Once you have archived the data and deleted it from the hard disk, you can no longer make any changes to it.

8 Select **OK** to delete QC data. The system displays a date range dialog box.

9 Type the QC Date Range for the data you wish to transfer **FROM** mm/dd/yy **TO** mm/dd/yy. Select **OK** to delete the data.

If you are using a USB, see Introduction for instructions on transferring information.

Review Archived Data

Introduction

You can review archived data from diskette, or copied from a storage PC to USB. You must copy both the archaa and toc files in order to view the data. You can review cumulative statistics for a control file, and view and print the QC File List, QC Log, QC Summary, QC Chart and Control Ranges. You cannot modify the archived control files.

Review Archived Data

1 Select **QC** from the menu bar.

2 Select **Archive F8**.

3 Select **2 Review External Media**.

4 Insert the archive media and select **OK** at the prompt.

5 The system displays information about the archive files (date archived, operator ID, software version). Review this information to determine whether you have selected the correct media.

- If the media is correct, select **Cancel** to stop the review process and return to the Archive menu.
- If the media is not correct:
  - Replace the media and select **OK**.
  - Review the information shown as described above.

6 Select **External Media** from the **QC Data Source** pull-down menu. The system displays a confirmation message.

7 Select **OK**. The system displays a message as data restoration is in progress. Restoration can take up to five minutes.

8 Select any of the following options:

- **Review F1** to review archived control definition.
- **List F4** to view archived QC File lists.
- **Log F5** to view the Log for the archived data.
- **Summary F6** to view a summary of the archived data.
- **Chart F7** to view a specific archived control chart.
- **Print F10** to print archived control ranges.

Refer to the appropriate sections in this chapter for specific instructions on each of the listed functions.

CHAPTER 6

Supplies

Overview

All three components of the Integrated Workstation use supplies that must be replenished. In addition, the Integrated Workstation generates waste that must be properly disposed. Use the Rgts/Cal screen on the workstation console and the Integrated Workstation Supply/Calibration Report.

Workstation Console Rgts/Cal Screen

To display the Rgts/Cal screen, select the **Rgts/Cal** icon:

Figure 6.1 Rgts/Cal Screen

E007751S.PNG

This screen includes three tabs:

- The DxI tab lists the reagents used by the DxI analyzer.

- The Supplies tab lists the supplies used by the DxI analyzer and the UCTA.
- The DxC tab lists the reagents and supplies used by the DxC analyzer.

The following sections cover the tabs in detail, as they relate to each component.

The Integrated Workstation Supply/Calibration Report

The Supply/Calibration report is a printout of the entries on all the **Rgts/Cal** tabs. To print a copy of the report, select **Print F10**.

The report is organized as follows:

- Pages 1-2: DxC reagents and DxC chemistry calibration status.
- Page 3: DxI reagents and DxI assay calibration status
- Page 4: DxI supplies
- Page 5: UCTA supplies

System Mode: Any Mode

DxI Supplies and Conditions

Overview

The DxI system uses reagent and bulk supplies to process samples. Reagent supplies are the on-board reagent packs. Bulk supplies are the supplies the system consumes and the waste it generates during processing. There are three consumable bulk supplies:

- Substrate
- Wash buffer
- Reaction vessels (RVs)

There are two different types of bulk waste:

- Liquid waste
- Solid waste

The system uses two bulk liquid waste containers and a solid waste container to collect the waste generated during sample processing. To prevent interruptions for needed supplies, monitor the status indicators and respond by adding or changing supplies promptly.

NOTE In some systems the liquid waste may be directly plumbed to the drain, requiring no liquid waste containers.

This section contains information associated with daily system startup. You can find additional information related to supplies in the DxI console help system. For information about the Bulk Supplies screen and the System Status panel see the DxI online Help.

If the **Rgts/Cal** icon is red or yellow, select it and look for tabs that are red or yellow. Select the tab(s) that are red or yellow and look for chemistries or supplies that are red or yellow.

Rgts/Cal: Supplies Tab, DxI Supplies

Use the Supplies tab to view the status of the bulk supplies and waste containers.

To display the Supplies tab:

1 Select the **Rgts/Cal** icon.

2 Select the Supplies tab.

Figure 6.2 Supplies Tab

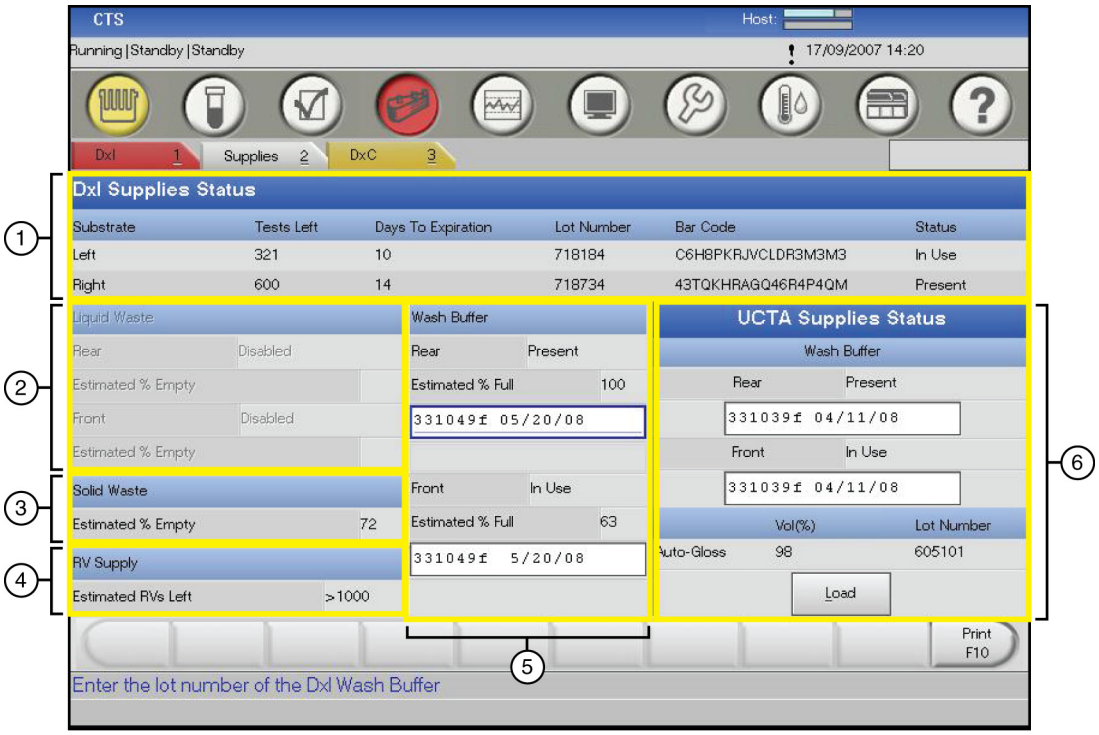

1. Substrate section
2. Liquid Waste section
3. Solid Waste section
4. RV Supply section
5. Wash Buffer section
6. UCTA Supplies Status section

Table 6.1 Supplies Tab Descriptions

Item	Description
(1) Substrate	**Left/Right** Displays a line of statistics for each substrate bottle separately.
(1) Substrate: Tests Left	**Tests Left** Displays the number of tests the system can process with the substrate supply. • This field becomes yellow if its associated on-board substrate bottle is empty. If there is only one on-board bottle, the field becomes yellow if the bottle has fewer than 60 tests remaining. • This field becomes red if all on-board bottles are empty.
(1) Substrate: Days to Expiration	**Days to Expiration** Displays the number of days until an open substrate bottle expires. The expiration date is based upon the day the bottle was loaded onto the system. • This field becomes yellow if an open bottle expires in three days or sooner. • This field becomes red if an open bottle is expired. **NOTE** If a substrate bottle is disabled, this field will not turn yellow or red until the bottle is enabled.
(1) Substrate: Lot Number	**Lot Number** Displays the lot number of each substrate bottle. • This field becomes yellow if the substrate bar code was not read, if a bar code error occurs, or if the lot expires in three days or sooner. **NOTE** If the bar code was not read, or if a bar code error occurs, a question mark (?) is displayed in the field. • This field becomes red if the lot is expired.
(1) Substrate: Bar Code	**Bar Code** Displays the bar code for each bottle of substrate.
(1) Substrate: Status	**Substrate Bottles** Displays the substrate status for the two on-board substrate positions (Left and Right). **Status** Displays one of five possible status values: • **In Use** - The system is using the bottle to process tests. • **Present** - A bottle is present, but is not in use. • **Not Present** - There is no bottle in the substrate position. • **Empty** - The bottle is empty, and must be changed. • **Disabled** - The substrate position is disabled and cannot be used.

Table 6.1 Supplies Tab Descriptions *(Continued)*

Item	Description
(2) Liquid Waste: Status	**Bulk Liquid Waste Containers** Displays the liquid waste status for the two on-board liquid waste positions (Rear and Front). **NOTE** Facing the instrument as the drawer pulls out, the front liquid waste container is closest to you. **NOTE** In some systems the liquid waste may be directly plumbed to the drain, requiring no liquid waste containers. These fields will be grayed out if they do not apply. **Status** There are five possible status values: • **In Use** - The system is using the container to collect liquid waste. • **Present** - A container is present, but is not in use. • **Not Present** - There is no container in the liquid waste position. • **Full** - The container is full, and must be changed. • **Disabled** - The container position is disabled and cannot be used.
(2) Liquid Waste: Estimated % Empty	**Estimated % Empty** Displays a percentage estimate of the available space in the on-board bulk liquid waste containers. **NOTE** In some systems the liquid waste may be directly plumbed to the drain, requiring no liquid waste containers. These fields will be grayed out if they do not apply. • The field becomes yellow if one of the on-board containers is almost full. • The field becomes red when all on-board containers are full. If there is only one on-board container, the field becomes red when the container has 9% of its volume available for collecting waste.
(3) Solid Waste	**Solid Waste Container** Displays the solid waste status for the on-board solid waste container. **Estimated % Empty** Displays a percentage estimate of the available space in the solid waste container. • This field becomes yellow when the container has 10% of its space available to collect waste. • This field becomes red when the container is full.

Table 6.1 Supplies Tab Descriptions *(Continued)*

Item	Description
(4) RV Supply	**Vessel Hopper** Displays the RV level in the vessel hopper. **Estimated RVs Left** If there are more than 1,000 RVs in the vessel hopper, the field reads **>=1000**. If there are fewer than 1,000 RVs, the field displays an estimate of the remaining number of RVs. • This field becomes yellow if there are fewer than 1,000 RVs remaining in the hopper. • This field becomes red if there are fewer than 100 RVs remaining in the hopper.
(5) Wash Buffer: Status	**Wash Buffer** Displays the wash buffer status for the two on-board wash buffer positions (Rear and Front). **NOTE** Facing the instrument as the drawer pulls out, the front wash buffer is closest to you. **Status** There are five possible status values: • **In Use** - A container is present and in use. • **Present** - A container is present but is not in use. • **Not Present** - There is no container in the wash buffer position. • **Empty** - The container is empty, and must be changed. • **Disabled** - The container position is disabled and cannot be used.
(5) Wash Buffer: Estimated % Full	**Estimated % Full** Displays a percentage estimate of the available wash buffer in the loaded bulk wash buffer containers. • This field becomes yellow if one of the on-board containers is low. • This field becomes red if all on-board containers are low. If there is only one on-board container, the field becomes red when the container has 10% of its volume available for processing.
(5) Wash Buffer: Lot Number	**Lot Number** Enter the Wash Buffer lot number for each of the two on-board wash buffer positions. This is a free text field.
(6) UCTA Supplies Status	See UCTA Supplies.

Substrate

The DxI system uses substrate to measure the amount of analyte in a processed test. All procedures in this section are performed at the DxI console.

A substrate bottle is stored refrigerated to maintain its stability. Prior to use, a bottle is equilibrated to room temperature in the substrate equilibration area located below the reagent load door. The equilibration area of the DxI instrument is partitioned, and holds up to two bottles of substrate in the DxI 600, or four bottles of substrate in the DxI 800 (see Figure 6.5, Substrate Bottle Equilibration Area (DxI 800 shown). An unopened substrate bottle can remain at room temperature for 14 days.

When the bottle has equilibrated, you can load it on the system. You should have two bottles on board the instrument at all times. When one bottle is empty, the system automatically switches to the second bottle, and you can change the empty one. In some circumstances, it may be necessary to change the in-use substrate bottle. You can change the in-use bottle through the user interface on the Bulk Supplies screen at the DxI console. Once you change an in-use substrate bottle it must be discarded. See the DxI online Help for complete instructions.

All substrate bottles are labeled with a bar code. The system uses the information on the bar code label to track lot number, serial number, expiration date, and the number of tests remaining in the bottle.

Change an Empty or Expired Substrate Bottle

If there is a sufficient substrate supply, the system continues to process tests while you change the empty or expired bottle.

Use this procedure to change an empty or expired substrate bottle.

System Mode: Any Mode

⚠ CAUTION

In the following step, do not force the substrate door open if it does not raise automatically. Consult the Rgts/Cal DxI tab to confirm which bottle to change.

⚠ CAUTION

When the substrate door is raised the system drains substrate from the lines back into the substrate bottle. This contaminates the remaining volume of substrate. If you raise the door to the in-use substrate bottle, you cannot reload the in-use bottle. Always discard the in-use bottle and load a fresh one.

---

1 Do not grasp the substrate load door handle (Figure 6.3, 4). Instead, place a finger below the handle and push up against the pressure until the door lifts approximately 1/4 inch. At this height, the system automatically raises the door.

2 Push inward on the front of the substrate load tray, then release quickly. The system releases the tray approximately one inch. Grasp the sides of the tray and pull out gently.

3 Lift the empty or expired bottle out of the tray and discard it.

Figure 6.3 To change a Substrate Bottle (Dxl 800 shown)

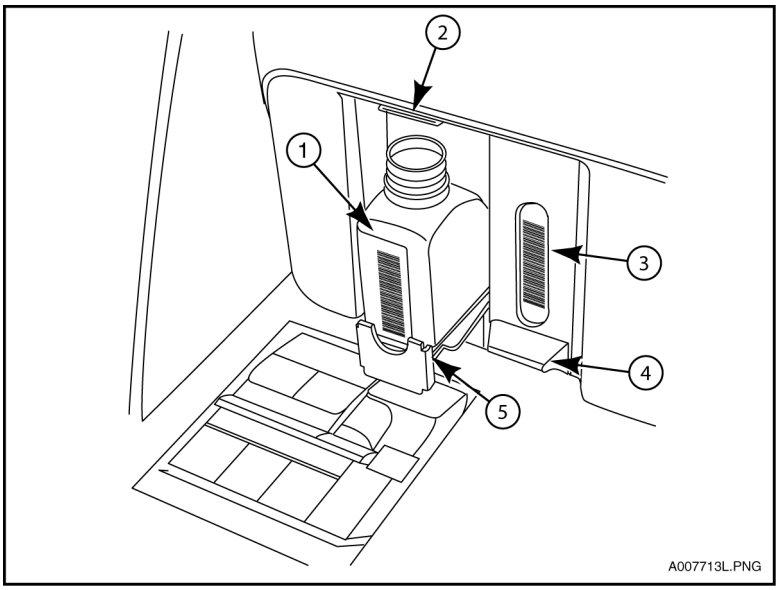

1. Substrate bottle
2. Substrate load door handle, raised
3. Substrate load door, closed
4. Substrate load door handle, closed
5. Substrate load tray

4 Lift up on the reagent load door (2). If the reagent tray in-use light is green, wait until the light turns off before opening the door.

Figure 6.4 Reagent Load Area

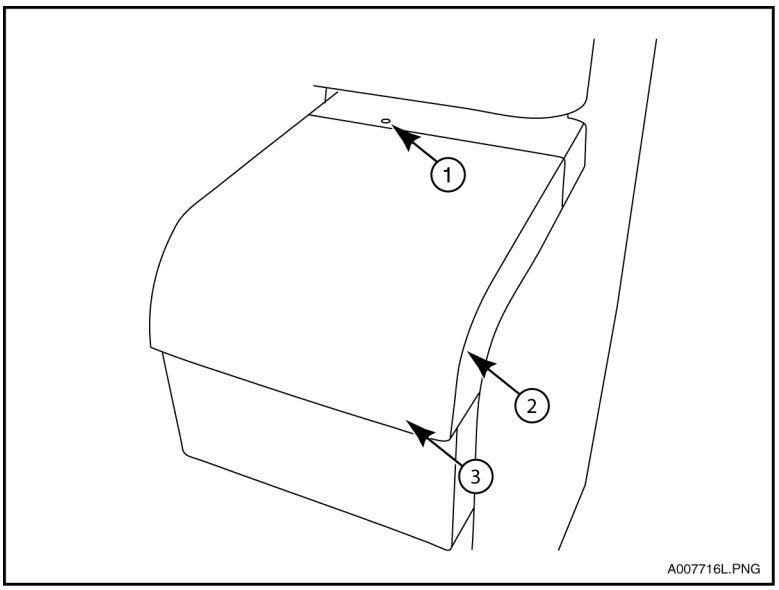

1. Reagent tray in-use light
2. Reagent load door
3. Load door bottom edge

5 Remove a full bottle from the substrate equilibration area.

Figure 6.5 Substrate Bottle Equilibration Area (DxI 800 shown)

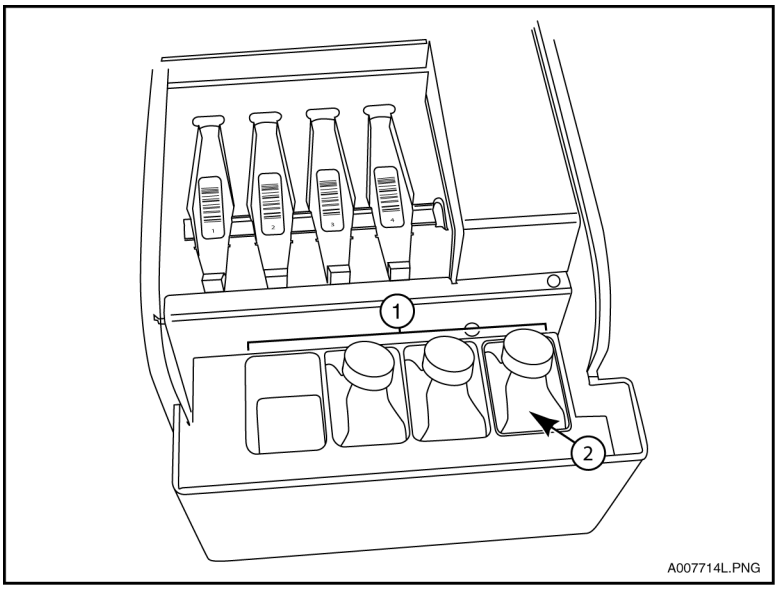

1. Substrate equilibration area
2. Substrate bottle

6 Close the reagent load door.

7 Remove the cap from the new bottle and discard it.

8 Place the new bottle in the load tray with the bar code label facing out.

9 Push the load tray in until it locks in place.

10 Keep your fingers away from the open door. The system automatically lowers the door after a three second delay.

11 Scan the bar code label through the window in the substrate load door. For more information, see the Scan the Substrate Bar Code Label procedure.

12 Remove a new, unequilibrated substrate bottle from storage and write the current date and time on the label.

13 Lift up on the reagent load door. If the reagent tray in-use light is green, wait until the light turns off before opening the door.

14 Replace the equilibrated bottle you removed in step 5.

15 Close the reagent load door.

Scan the Substrate Bar Code Label

Use this procedure to scan the substrate bar code label with the substrate bar code reader.

NOTE You have 30 seconds to scan the substrate bar code label after the system closes the substrate load door. If you do not scan the bar code within 30 seconds, a substrate time-out error occurs. The substrate load door opens automatically and a message is sent to the Event Log. For more information, see the Resolve Substrate Bar Code Errors procedure.

System Mode: Any Mode

1 Begin this procedure as the substrate load door is closing on a newly loaded substrate bottle. For more information, see the Change an Empty or Expired Substrate Bottle procedure.

2 Remove the substrate bar code reader from its holder in front of the DxI reagent load area.

3 Rotate the bar code reader approximately 90 degrees until the trigger is horizontal to the floor.

4 Aim the bar code reader at the bar code label that is visible through the substrate load door. Hold the reader approximately 1 to 8 inches (2.5 to 20.3 cm) from the label.

5 Squeeze and hold the trigger, center the red light (indicating the scanning area) within the lines of the bar code, and then release the trigger.

The bar code reader beeps if the bar code is read successfully and updates the substrate information on the Bulk Supplies screen on the DxI console, or the Supplies tab on the workstation console.

NOTE If the system reads the bar code successfully but does not accept it, a substrate bar code scan error occurs. For more information, see the Resolve Substrate Bar Code Errors procedure.

6 Return the substrate bar code reader to its holder.

Resolve Substrate Bar Code Errors

Two substrate bar code errors can occur while you change a substrate bottle.

- Timeout errors for bar codes not successfully scanned within 30 seconds of closing the substrate load door.
- Scan errors for bar codes that the system cannot read.

Use this procedure to resolve a substrate bar code error.

System Mode: Any Mode

1 Begin this procedure when the DxI console displays either the Bar Code Timeout window or the Bar Code Scan Error window while you are changing the substrate bottle. For more information, see the Scan the Substrate Bar Code Label procedure.

Figure 6.6 Substrate Bar Code Error (Scan View) Window

E007721S.PNG

Table 6.2 Substrate Bar Code Error (Scan View) Window Descriptions

Item	Description
Open substrate door	(Option) Select to open the substrate load door. If a bar code timeout error has occurred, this option is not available.
Rescan bottle	(Option) Select to rescan the substrate bar code label.
Enter bar code	(Option) Select to manually enter the substrate bar code using the keyboard.

2 Select an option to resolve the error.

- If a timeout error occurred because the bar code label was not visible to scan, remove the bottle and place it correctly in the tray. For more information, see the Change an Empty or Expired Substrate Bottle procedure. Then select the **Rescan Bottle** option and scan the bottle again.
- If a timeout error occurred because you did not scan a visible bar code label within 30 seconds, select the **Rescan Bottle** option and scan the bottle again.
- If a bar code scan error occurred, select the **Enter Barcode** option and type the bar code from the keyboard.

3 Select **Done F1**.

NOTE If you have not returned the substrate bar code reader to its holder, do so now.

Change an In-Use Substrate Bottle

You cannot change the in-use substrate bottle if the second bottle is empty or was not loaded, if the second position is disabled, or if the bar code was not scanned.

NOTE When you change an in-use substrate bottle, the system cancels all of the tests remaining in the bottle. The bottle cannot be used again and must be discarded.

Use this procedure to change an in-use substrate bottle.

System Mode: Any Mode

⚠ CAUTION

To avoid contaminating the substrate supply, always discard partial bottles of substrate. Do not combine partial bottles or try to load a partial bottle on another instrument.

1. From the Bulk Supplies screen, select **Change In-Use Bottle F3**.
2. Select **Substrate F1**. The Switch Substrate window opens, informing you that the substrate remaining in the in-use bottle cannot be used.
3. Select **OK F1** to continue switching the in-use substrate bottle.
4. The system changes the in-use bottle and updates the **Status** field on the Bulk Supplies screen.
5. Change and discard the old bottle. For more information, see the Change an Empty or Expired Substrate Bottle procedure.

Wash Buffer

The DxI system uses wash buffer to:

- Dilute samples or reagents
- Wash away unbound material in the RVs
- Wash the pipettor probes
- Prime the system

The wash buffer supply drawer is on the lower right as you face the instrument. The drawer holds two 10-liter bulk wash buffer containers, which is enough for at least three hours of continuous processing.

You should have two containers on board the instrument at all times. The system draws wash buffer from one container. When the container is empty, the system automatically switches to the second, and you can change the empty one. In some circumstances, it may be necessary to change the in-use wash buffer container. Perform this procedure at the DxI console. You can change the in-use container through the user interface on the Bulk Supplies screen. For more information, see the DxI online Help.

⚠ WARNING

Wash buffer contains ProClin 300[1] preservative, which may cause sensitization by skin contact. After contact with skin, wash immediately with soap and water. Wear suitable gloves.

Change an Empty Bulk Wash Buffer Container

If there is a sufficient wash buffer supply, the system continues to process tests while you change the empty bulk wash buffer container.

Use this procedure to change an empty bulk wash buffer container.

System Mode: Any Mode

1. Pull out the wash buffer supply drawer.
2. Remove the perforated cardboard panels at the top and the sides of a new wash buffer container.
3. Gently mix the new wash buffer container.
4. Place the new wash buffer container on the floor next to the open supply drawer and the container you are replacing.
5. Grasp the cap on the new container and pull upward until the plastic neck is completely extended.
6. Remove the cap and inner seal from the new container.
7. Press the disconnect button to release the fitting and tubing from the cap/draw tube assembly on the empty container. If the fitting does not release, pull up gently on the fitting while pressing the disconnect button.

1 ProClin is a registered trademark of Rohm & Haas company or its subsidiaries or affiliates.

8 Lift the empty container from the supply drawer and replace it with the new container.

⚠ CAUTION

To avoid contaminating the wash buffer supply, do not touch the draw tube in the following steps. Handle the cap/draw tube assembly by the cap only.

9 Unscrew the cap/draw tube assembly on the empty container and carefully remove it from the container. Be sure to lift the draw tube completely out of the container before moving it.

Figure 6.7 To change the Bulk Wash Buffer Container

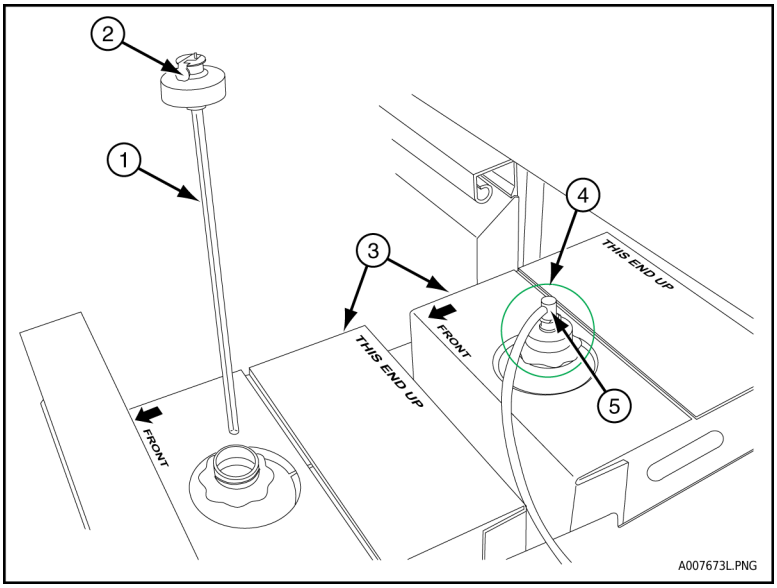

1. Draw tube
2. Disconnect button
3. Bulk wash buffer containers
4. Cap/draw tube assembly
5. Cap fitting and tubing

10 Lower the cap/draw tube assembly into the new container and tighten the cap.

11 Connect the fitting into the cap/draw tube assembly on the new container.

12 Carefully push in the drawer. Be sure that none of the wash buffer tubing is pinched between the drawer and the wall.

13 Discard the empty container.

14 If desired, enter the lot number of the new wash buffer on the **Supplies** tab on the **Reagent/ Calibration** screen.

Change an In-Use Bulk Wash Buffer Container

You cannot change the in-use bulk wash buffer container if the second wash buffer container is empty or was not loaded, if the second position is disabled.

Use this procedure to change the in-use bulk wash buffer container.

System Mode: Any Mode

WARNING

Wash buffer contains ProClin 300[1] preservative, which may cause sensitization by skin contact. After contact with skin, wash immediately with soap and water. Wear suitable gloves.

1 From the Bulk Supplies screen, select **Change In-Use Bottle F3**.

2 Select **Wash Buffer F3**.

3 The system changes the in-use wash buffer container and updates the **Status** field on the Bulk Supplies screen.

4 Change the old container. For more information, see the Change an Empty Bulk Wash Buffer Container procedure.

1 ProClin is a registered trademark of Rohm & Haas company or its subsidiaries or affiliates.

Reaction Vessels

The DxI system uses reaction vessels (RVs) to:

- Store sample on board the instrument
- Prepare sample dilutions
- Incubate sample with assay-specific reagents during processing

RVs are used as sample vessels (SVs) for the integrated system.

The vessel hopper is located above the sample presentation unit (SPU) on the left side of the instrument. The hopper holds up to two bags of approximately 1,000 RVs each. When the hopper is full, there are enough RVs for at least three hours of continuous processing.

Add RVs

Use this procedure to add RVs to the vessel hopper.

WARNING

To avoid contaminating the RV supply, add full, previously unopened RV bags to the hopper whenever it is possible. If you add a previously opened bag of RVs to the hopper, be sure the bag was closed to protect the RVs from dust and other contaminants.

System Mode: Any Mode

---

1 Open the vessel hopper door by lifting upward.

Figure 6.8 Adding RVs to the Hopper

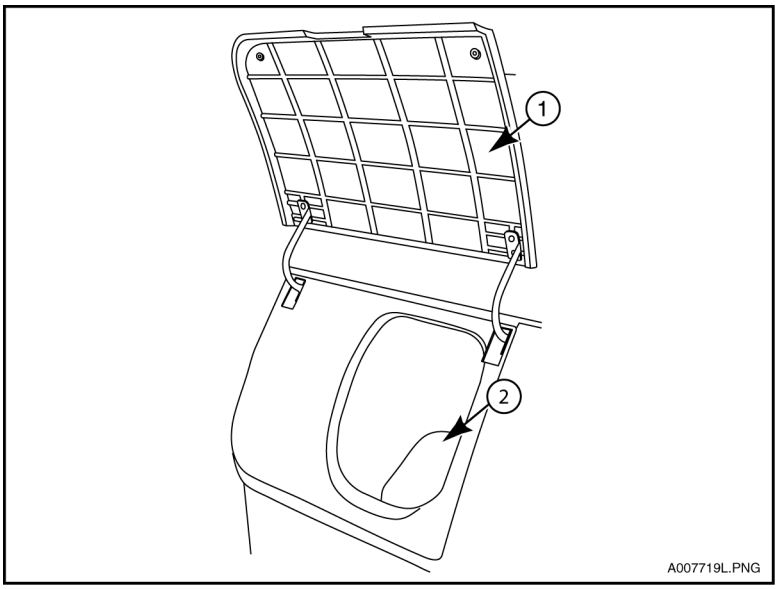

1. Vessel hopper door
2. Vessel hopper

2 Carefully open a bag of RVs.

⚠ CAUTION

In the following step, only add DxI system RVs to the hopper. If you add other RVs or containers, the instrument will malfunction.

3 Carefully pour the RVs into the hopper using a side-to-side motion. This prevents the RVs from accumulating in only one area of the hopper, and keeps the RV level relatively even.

4 Close the vessel hopper door.

Liquid Waste

NOTE In some systems the liquid waste may be directly plumbed to the drain, requiring no liquid waste containers.

The DxI system collects all liquid waste for proper disposal. Liquid waste is generated when:

- The pipettors are washed between processing steps
- Unreactive fluids are washed from the RVs

⚠ WARNING

Consider the liquid waste to be potentially infectious. Handle and dispose of liquid waste according to proper laboratory procedures. Proper hand, eye, and facial protection is required.

Reagents, calibrators, and controls used with the system may contain small quantities of sodium azide preservative. Sodium azide preservative may form explosive compounds in metal drain lines.

The liquid waste drawer is on the lower left as you face the instrument. The drawer on the DxI instrument holds two reusable bulk liquid waste containers. The system dispenses liquid waste into one container at a time. When the container is full, the system automatically switches to the second, and you can change the full one. In some circumstances, it may be necessary to change the in-use liquid waste container. You can change the in-use container through the user interface on the Bulk Supplies screen.

Change a Full Bulk Liquid Waste Container

If there is sufficient volume available for collecting waste, the system continues to process tests while you change the full bulk liquid waste container.

Use this procedure to change a full bulk liquid waste container.

WARNING

This procedure may expose you to potentially infectious materials. Handle and dispose of biohazard materials according to proper laboratory procedures. Use proper hand, eye, and facial protection.

WARNING

Thoroughly flush any decontaminant from the liquid waste container before you store the container. If you reuse a container without flushing it, any remaining decontaminants may react with chemicals dispensed into the waste container. The resulting chemical reactions may create gases harmful to you or the instrument.

System Mode: Any Mode

1. Pull out the liquid waste drawer.
2. Place an empty liquid waste container on the floor adjacent to the open liquid waste drawer and the container you are replacing.
3. Press the disconnect button (Figure 6.9, 5) to release the fitting and tubing from the cap assembly. If the fitting does not release, pull up gently on the fitting while pressing the disconnect button.
4. Lift the full container from the drawer and replace it with the empty container.
5. Connect the fitting into the cap assembly on the empty container.
6. Carefully push in the drawer. Be sure that none of the liquid waste tubing is pinched between the drawer and the wall.
7. Decontaminate the contents of the full bulk liquid waste container according to proper laboratory procedures before disposing of the liquid waste.
8. Dispose of the liquid waste according to proper laboratory procedures.
9. Rinse the just-emptied container thoroughly by filling it with tap water and discarding the contents to remove any traces of the decontaminant.

WARNING

Thoroughly flush any decontaminant from the liquid waste container before you store the container. If you reuse the container without flushing it, any remaining decontaminants may react with chemicals dispensed into the waste container. The resulting chemical reactions may create gases harmful to you or the instrument.

10 Store the clean container for future use.

Figure 6.9 Changing the Bulk Liquid Waste Container

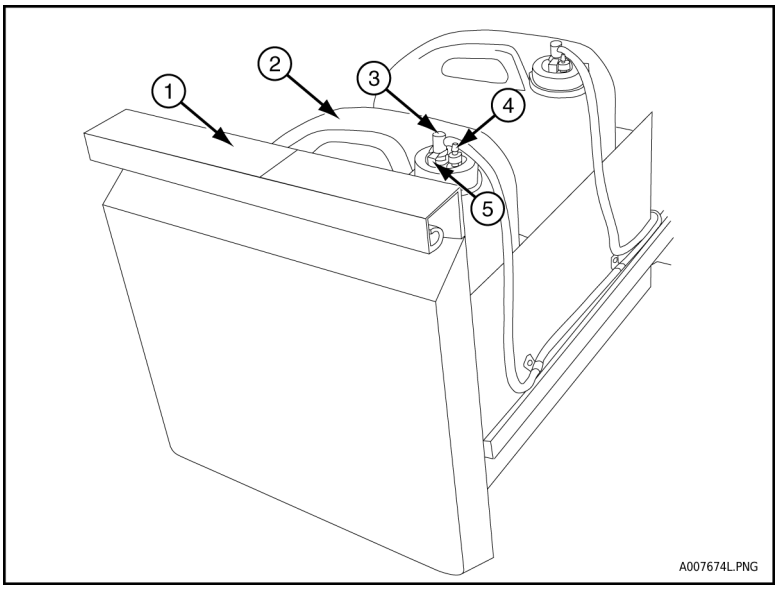

1. Liquid waste drawer
2. Bulk liquid waste container
3. Cap fitting and tubing
4. Vent
5. Disconnect button

Change an In-Use Bulk Liquid Waste Container

You cannot change the in-use bulk liquid waste container if the second liquid buffer container is full or was not loaded, if the second position is disabled.

Use this procedure to change the in-use bulk liquid waste container.

System Mode: Any Mode

1 From the Bulk Supplies screen, select **Change In-Use Bottle F3**.

2 Select **Liquid Waste F2**.

3 The system changes the in-use liquid waste container and updates the **Status** field on the Bulk Supplies screen.

4 Change the old container. For more information, see the Change a Full Bulk Liquid Waste Container procedure.

Solid Waste

The solid waste container collects the empty reagent packs, used RVs, and condensation generated by the DxI and UCTA system during processing.

WARNING

Consider the solid waste to be potentially infectious. Handle and dispose of solid waste according to proper laboratory procedures. Proper hand, eye, and facial protection is required.

The solid waste container is a large plastic bin lined with a biohazardous waste bag. There is only one container for solid waste. The container is stored behind the pull-down door located between the liquid waste and wash buffer supply drawers. When the container is full, the system continues processing tests but does not process any new test requests.

CAUTION

Do not overfill the solid waste container. Excess solid waste may obstruct the waste chute.

Change a Full Solid Waste Container

The system continues processing tests while you change the full solid waste container, but does not initiate any new test requests. The system does not dispose of any solid waste until the empty container is in place again.

Use this procedure to change the solid waste container bag.

⚠ WARNING

This procedure may expose you to potentially infectious materials. Handle and dispose of biohazard materials according to proper laboratory procedures. Use proper hand, eye, and facial protection.

⚠ CAUTION

If you change a full solid waste container while the system is in the Running or Paused mode, be sure to complete the procedure within five minutes. Solid waste may accumulate and obstruct the waste chute if it takes longer than five minutes to change the container.

Do not open the solid waste door while the system is initializing, running a Daily Clean System routine, or running a Special Clean routine. Opening the solid waste door will cancel the routine and the system will enter the Not Ready mode.

System Mode: Any Mode

1 Open the solid waste door by pulling down on the handle.

2 Slide the container out of the storage area.

Figure 6.10 Changing the Solid Waste Container

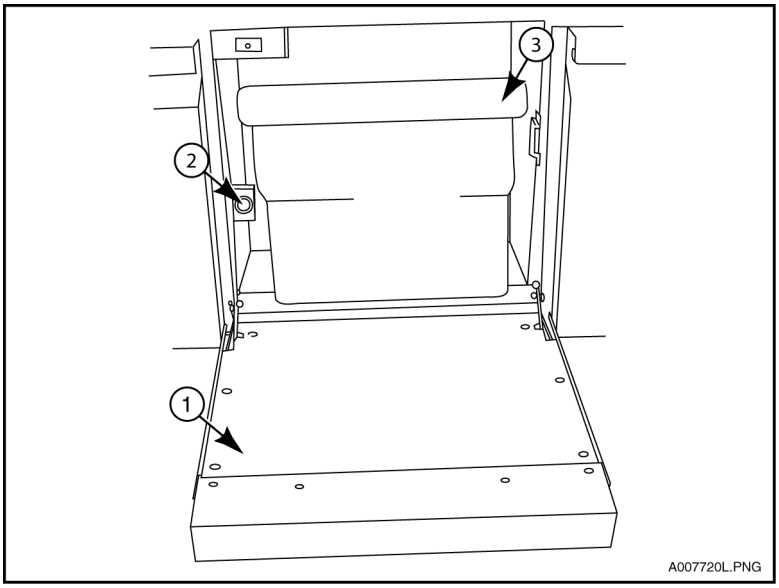

1. Solid waste door
2. Green reset button
3. Solid waste container

3 Seal the biohazard bag lining the container by tying two ends of the bag together in a knot.

4 Lift the sealed biohazard bag out of the plastic bin.

5 Line the container with a new biohazard bag. Expand the bag so it reaches the sides of the container.

6 Slide the container back into the storage area.

7 Press the green reset button mounted on the left side of the storage area.

NOTE If you do not press the reset button, the system will not reset the system indicators. If you changed a full container, the system will not process any new test requests until you press the reset button.

8 Close the solid waste door.

Rgts/Cal: DxI Tab Overview

The reagent supplies are the on-board reagent packs. A reagent pack is a container that holds up to five assay-specific reagents in individual wells.

WARNING

Consider the assay-specific reagents inside the reagent packs to be potentially infectious. Handle and dispose of reagent packs according to proper laboratory procedures. Proper hand, eye, and facial protection is required.

You can monitor reagent supplies on the Rgts/Cal DxI tab. The screen contains 50 positions that correspond to the 50 slots in the reagent storage chamber. An empty position indicates an available slot in the storage chamber.

Rgts/Cal: DxI Tab

Use the Rgts/Cal DxI tab to:

- View specific details about the on-board reagent packs
- Print the Integrated Workstation Supply/Calibration report

To display the DxI tab:

1 Select the **Rgts/Cal** icon.

2 Select the DxI tab.

Figure 6.11 Reagent and Calibration Status DxI Tab

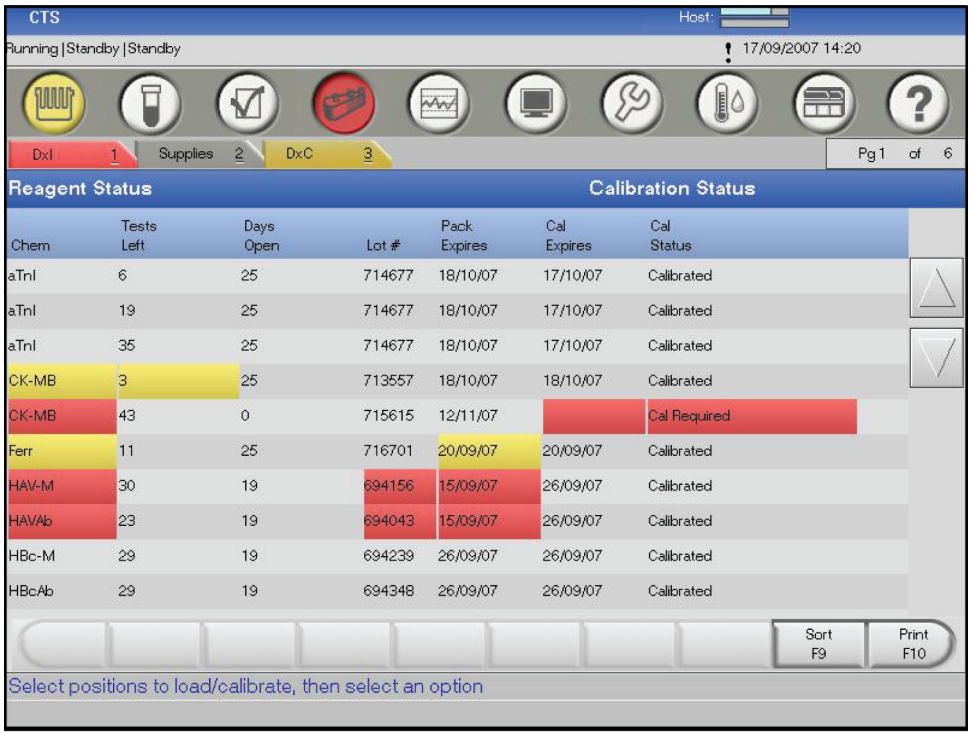

E007744S.PNG

Table 6.3 Reagent Supplies Screen Descriptions

Chem	(Column) Displays the reagent test name. In the case of primary and secondary tests, such as Folate and its secondary test RBC Folate, both names are displayed.
Tests Left	(Column) Displays the number of tests remaining in the reagent pack. The number changes as the system uses the reagent. • This field becomes yellow if there are 10 tests or fewer remaining for all on board packs with the same lot number. • This field becomes red if there are no tests remaining in the pack.
Days Open	(Column) Displays the number of days since the system first punctured each reagent pack.
Lot #	(Column) Displays the reagent pack lot number. • This field becomes yellow if the pack lot number expires in three days or sooner. • This field becomes red if the pack lot number is expired. If the bar code was not read, *Unknown* displays in the field.

Table 6.3 Reagent Supplies Screen Descriptions *(Continued)*

Pack Expires	(Column) Displays the expiration date for each reagent pack. The expiration date is the lot expiration date or the open pack expiration date, whichever is earliest. The open pack expiration date is the date the system first punctured the reagent pack, plus the number of days defined in the Assay Protocol File. • This entry becomes yellow if the open pack stability expires in three days or sooner. • This entry becomes red if the open pack stability is expired.
Cal Expires	(Column) For on-board packs, displays the expiration date of the active calibration. • This entry becomes yellow if the calibration expires in three days or sooner. • This entry becomes red if the calibration is expired.
Cal Status	(Column) Displays the calibration status of the reagent. The entry is in red if the calibration is expired, required, or has failed.
SortF9	(Button) Select the pack attribute by which the reagents are sorted on the screen.
Print **F10**	(Button) Select to print the Integrated Workstation Supply/Calibration report.

Load a Reagent Pack

If there is sufficient reagent available, the system continues to process tests while you load another reagent pack.

Use this procedure to load reagent packs onto the instrument.

⚠ WARNING

This procedure may expose you to potentially infectious materials. Handle and dispose of biohazard materials according to proper laboratory procedures. Use proper hand, eye, and facial protection.

⚠ WARNING

Do not load partial packs from another system onto your instrument.

NOTE The system prevents you from accidentally loading empty or expired reagent packs. You can use a pack that expires while it is onboard the instrument by overriding the expired condition. However, selecting to override an expired condition does not permit you to load a pack that expires while it is offboard, even if another pack from the same lot is onboard when the expiration occurs.

NOTE Loading a reagent pack does not automatically enable its assay. If the assay is disabled, you must enable it on the Tests Setup screen.

System Mode: Any Mode

1 Check the status of the reagent tray in-use light:

Off: The door is not locked. You can load reagent packs.

Green: The system is processing tests and the door is locked. Wait until the light turns off before loading reagent packs.

Figure 6.12 Reagent Load Area

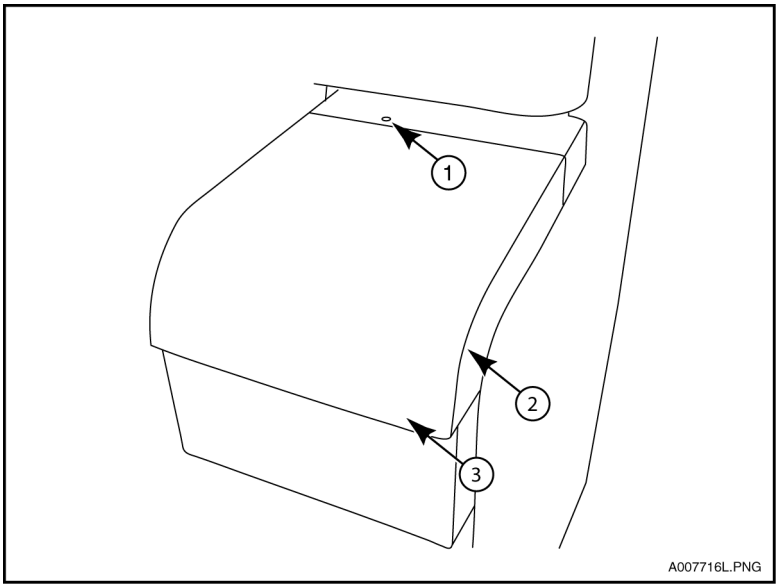

1. Reagent tray in-use light
2. Reagent load door
3. Load door bottom edge

2 Mix the new, unpunctured packs by gently inverting them several times to dislodge particles from the seal or sides of the well. It is not necessary to completely resuspend the particles.

NOTE Do not invert packs that have been punctured. Do not vigorously shake packs or use a vortex mixer.

3 Open the reagent load door by lifting up on the bottom edge.

⚠ WARNING

In the following step, do not load partial packs from another system onto your instrument.

⚠ CAUTION

To avoid damaging the reagent packs in the following step, be sure they are properly seated in the tray positions.

4 Place up to four reagent packs in the tray on the DxI instrument. Place the packs in the numbered tray positions so the narrow end is at the back of the tray and the bar code label faces up.

Figure 6.13 Loading a Reagent Pack

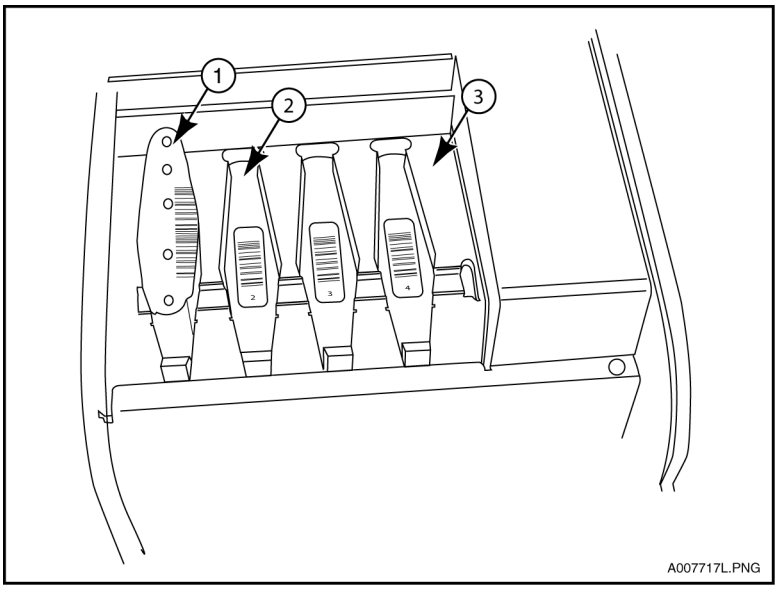

1. Reagent pack
2. Reagent pack position
3. Reagent load tray

5 Close the reagent load door.

The system moves the packs inside the instrument and reads the bar code labels. For each successfully loaded pack, a Reagent Pack button is added to the Reagent Supplies screen. For more information, see the Rgts/Cal: DxI Tab.

If you load an empty or expired pack, the system moves the pack to the reagent storage chamber and a Reagent Pack button with a question mark (?) in the **Test Name** field is added to the Reagent Supplies screen. The pack cannot be used for normal processing. You can unload the pack at your next opportunity. For more information, see the Unload a Reagent Pack procedure.

6 Carefully review the Reagent Supplies screen to make sure the information for the reagent pack just loaded is correct.

WARNING

If you loaded a used pack, make sure the number of tests displayed for the pack is less than 50. Erroneous, but believable, results may be obtained if a used pack is incorrectly identified as a new pack containing 50 tests. If a used pack is identified as a new pack, unload it and use this procedure to load a fresh pack.

Unload a Reagent Pack

The system automatically unloads empty reagent packs and places them in the solid waste container. Use this procedure to manually unload a reagent pack. All information for the unloaded pack remains in the database until you manually delete it from inventory.

WARNING

This procedure may expose you to potentially infectious materials. Handle and dispose of biohazard materials according to proper laboratory procedures. Use proper hand, eye, and facial protection.

System Mode: Any Mode

1 From the Reagent Supplies or Reagent Inventory screen on the DxI console, select the **Reagent Pack** button for the pack you intend to unload.

NOTE You can unload up to four reagent packs at a time on the Reagent Supplies screen.

NOTE You can unload only one reagent pack at a time on the Reagent Inventory screen.

NOTE If a reagent pack is in-use (identified by the in-use [padlock] icon on the Reagent Supplies screen), you cannot unload it from the system.

2 Select **Unload Reagent Pack F2**.

The reagent tray in-use light turns green. A progress window is displayed while the system retrieves the selected pack and delivers it to the loading area.

NOTE If one or more of the selected packs cannot be unloaded, the **Unload Reagent Pack F2** button is not available.

3 When the reagent tray in-use light turns off, open the load door by lifting up on the bottom edge (see Figure 6.12, Reagent Load Area).

NOTE If you unload packs while the system is in the **Running** mode, it may take longer than normal for the system to unlock the reagent load door.

NOTE If you do not open the door within one hour, the system returns the pack to the reagent storage chamber.

4 Remove the reagent pack from the tray.

5 Close the reagent load door.

The system deletes the corresponding Reagent Pack button from the Reagent Supplies screen.

NOTE If you close the door before removing each pack from the tray, the remaining packs are returned to the reagent storage chamber.

6 If you intend to use an unloaded pack again, store it upright in the refrigerator. Use the pack before it expires.

Unload All Reagent Packs

Use this procedure to unload all reagent packs from the system. The system unloads the packs, but maintains all pack information in the database.

WARNING

This procedure may expose you to potentially infectious materials. Handle and dispose of biohazard materials according to proper laboratory procedures. Use proper hand, eye, and facial protection.

System Mode: Ready, Not Ready

1 From the Reagent Supplies screen, select **Unload All Reagent Packs F3** to display the Unload All Packs window.

Figure 6.14 Unload All Packs Window

E007708S.PNG

Table 6.4 Unload All Packs Window Descriptions

Moving Packs to Tray	(Field) Monitors the system as it moves packs to the tray. When the packs are ready to unload, a message instructs you to unload packs now.
Unload all Packs - % Complete	(Field) Monitors the system as it removes all reagent packs from the reagent storage chamber.
Packs to Unload	(Field) Displays the number of reagent packs remaining in the reagent storage chamber.
Cancel F8	(Button) Select to stop unloading the remaining on board reagent packs.

2 When the reagent tray in-use light turns off, open the reagent load door by lifting up on the bottom edge (see Figure 6.12, Reagent Load Area).

3 Remove the packs from the reagent tray and close the reagent door.

The system deletes the corresponding Reagent Pack buttons from the Reagent Supplies screen, and starts moving the next set of reagent packs from the reagent storage chamber to the tray.

NOTE The system waits until the reagent load door is closed to continue unloading reagent packs.

NOTE If you do not open the door within one hour, the system returns the packs to the reagent storage chamber and cancels the operation.

4 Repeat steps 2 and 3 until all packs are removed from the instrument.

5 Select **Exit F1**.

UCTA Supplies

Rgts/Cal: Supplies Tab, UCTA Supplies

Use the Supplies Tab to check the UCTA supplies.

1 Select **Rgts/Cal** from the menu bar.

2 Select the **Supplies** tab on the **Reagent/Calibration** screen to view the supply status. A supply highlighted in yellow indicates that the supply is getting low. A supply highlighted in red indicates that the particular supply is too low or empty and requires immediate attention.

Figure 6.15 Rgts/Cal Supplies Tab: UCTA Supplies Status

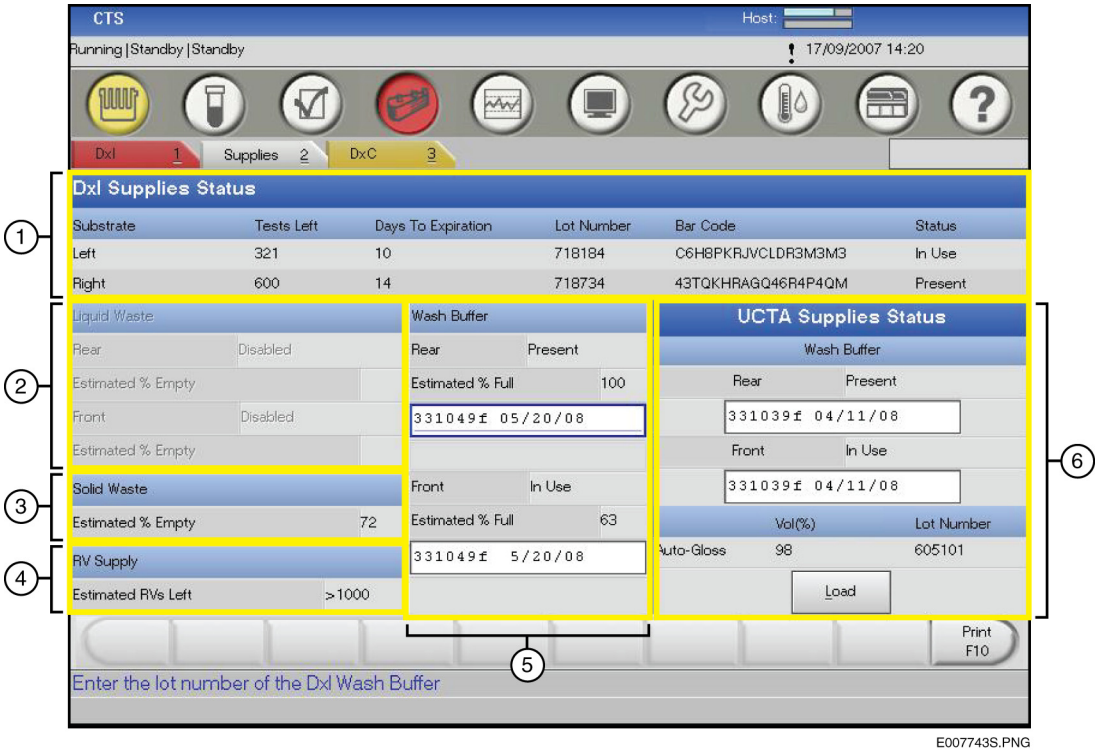

1. Substrate section
2. Liquid Waste section
3. Solid Waste section
4. RV Supply section
5. Wash Buffer section
6. UCTA Supplies Status section

Table 6.5 UCTA Supplies Status Descriptions

Item	Description
(6) Wash Buffer Status	Displays the wash buffer level in the two on-board UCTA wash buffer positions (Rear and Front). **NOTE** Facing the instrument as the drawer pulls out the front wash buffer is closest to you. There are four possible status values: • **In Use** - A container is present, and in use. • **Present** - A container is present, but is not in use. • **Not Present** - There is no container in the wash buffer position. • **Empty** - The container is empty, and must be changed.
(6) Wash Buffer Lot Number	Enter the Wash Buffer lot number of each of the two on-board UCTA wash buffer positions. This is a free text field.
(6) Auto-Gloss Vol (%)	Displays the estimated percent of the remaining Auto-Gloss.If the volume displayed does not match the actual Auto-Gloss volume, you can Change the Auto-Gloss Solution at the UCTA Unit.
(6) Auto-Gloss Load	(Button) Select to change the Auto-Gloss solution. See Edit the Volume for the Auto-Gloss Solution at the UCTA Unit for more information.

Change the Wash Buffer at the UCTA Unit

The Wash Buffer is used to wash the UCTA probes. The wash buffer assembly is located underneath the UCTA unit. The UCTA Supply tab becomes yellow if one wash buffer container is empty and red if both containers are empty.

1. Open the door underneath the UCTA. The Wash Buffer Supply is mounted on the lower sliding tray.
2. Pull out the lower sliding tray.
3. Lift the empty container from the lower sliding tray and place it on the floor adjacent to the sliding tray.
4. Remove the perforated cardboard panels at the top and the sides of a new wash buffer container.
5. Gently mix the new wash buffer container.

6 Place the new wash buffer container onto the lower sliding tray.

NOTE Be sure the container is facing front.

7 Grasp the cap on the new container and pull upward until the plastic neck is completely extended.

8 Remove the neck guard from the empty container.

9 Slip in the neck guard on the plastic neck of the new container.

Figure 6.16 Inserting Neck Guard

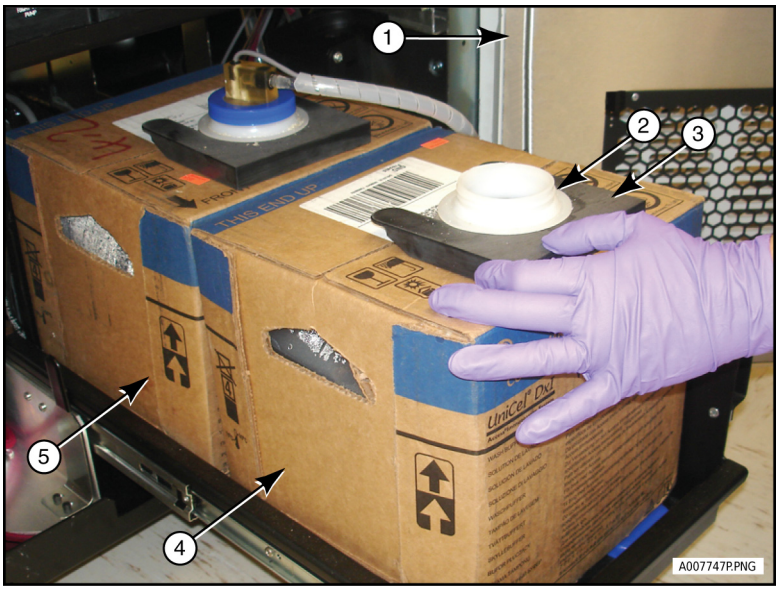

1. UCTA Door
2. Plastic Neck
3. Neck Guard
4. Front Wash Buffer
5. Rear Wash Buffer

10 Remove the cap and inner seal from the new container.

⚠ CAUTION

To avoid contaminating the wash buffer supply and introducing air into the wash buffer line, do not touch, wipe or shake the draw tube in the following steps. Handle the cap/draw tube assembly by the cap only.

11 Unscrew the cap/draw tube assembly on the empty container and carefully remove it from the container. Be sure to lift the draw tube completely out of the container before moving it.

12 Lower the cap/draw tube assembly into the new container and tighten the cap.

13 Carefully push in the lower sliding tray. Be sure that none of the wash buffer tubing is pinched between the drawer and the wall.

14 Discard the empty container.

15 If desired, enter the lot number of the new wash buffer on the **Supplies** tab on the **Reagent/Calibration** screen.

Change the Auto-Gloss Solution at the UCTA Unit

Auto-Gloss solution is used to lubricate the piercer probes on the UCTA unit. Use this procedure the replace the Auto-Gloss solution. Refer to Figure 6.17.

Replace and Load the Auto-Gloss Solution

1 Select **Rgts/Cal** from the menu bar.

2 Select the **Supplies** tab on the screen.

3 Under the UCTA Supplies Status Auto-Gloss section select **Load**. A Load UCTA Auto-Gloss data screen appears.

4 Open the UCTA door. Pull out the upper sliding tray. The Auto-Gloss bottle is behind the syringes.

Figure 6.17 UCTA Auto-Gloss

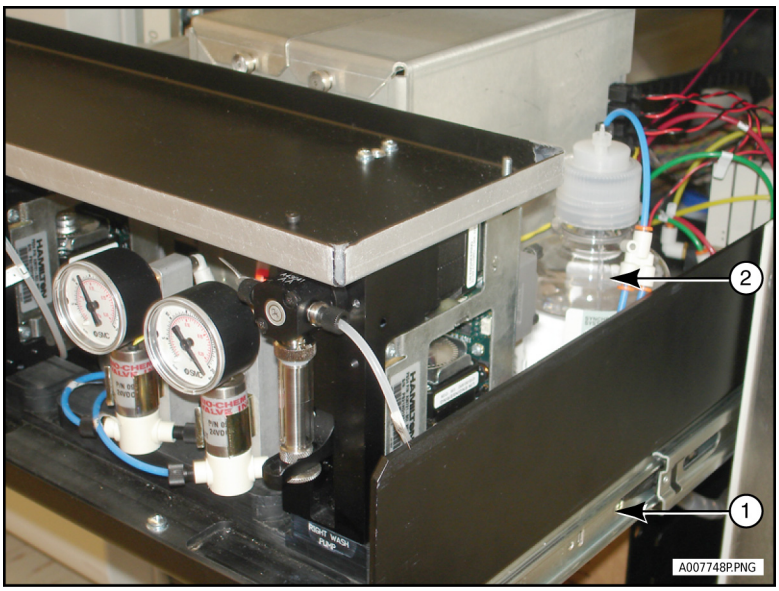

1. Upper Sliding Tray
2. Auto-Gloss Bottle

5 Unfasten the cap and remove the old bottle.

6 Install the new Auto-Gloss bottle and tighten the cap. Use the DxC hand-held bar code reader to scan the Auto-Gloss bottle. The data appears on the screen.

7 Select **Done F10**.

Edit the Volume for the Auto-Gloss Solution at the UCTA Unit

If the UCTA Auto-Gloss volume shown on the Rgts/Cal Supplies tab does not match the actual Auto-Gloss volume, you can enter the correct volume using this procedure. Refer to Figure 6.17.

1 Select **Rgts/Cal** from the menu bar.

2 Select the **Supplies** tab on the screen.

3 Under the UCTA Supplies Status Auto-Gloss section select **Load**. A Load UCTA Auto-Gloss data screen appears.

4 Enter the correct volume for the UCTA Auto-Gloss in the **Vol.** field.

5 Select **Done F10**.

DxC Supplies and Reagents

Reagent Load

This section describes how to load reagents onto the DxC Integrated Workstation system using the DxC tab of the Reagent Load/Calibration screen. The DxC system loads and removes both cartridge (CC) and modular (MC) chemistries bulk reagents. Reagent information encoded on the container label can be read by the bar code reader or entered manually from the keyboard.

Cartridge reagents:

- are stored in wedge-shaped cartridges containing three separate compartments.
- include a majority of chemistries (excluding the electrolytes).
- include user-defined reagents.

Modular reagents:

- Modular reagents are stored inside the lower left compartment of the DxC in 2 L bottles.
- Other solutions associated with modular reagents include:
  - No Foam
  - CTS Auto-Gloss (used to lubricate CTS blade)
  - Wash Concentrate II
  - Alkaline Buffer

No Foam, CTS Auto-Gloss, and Wash Concentrate II are stored in bottles in the DxC Hydropneumatics compartment. The Alkaline Buffer is stored in a bottle within the ISE Module.

Always check reagent status before starting a run. Make sure reagent is loaded for all tests ordered and that all reagents have sufficient volume to complete the number of tests in the run.

PreRun Checklist

Before testing samples, generate a Pre Run Checklist to determine if reagents should be loaded or calibrated. From the Main screen, select **PreRun F9**.

Rgts/Cal: DxC Tab Overview

If the DxC tab is red or yellow, select it and look for chemistries that are highlighted red or yellow. Refer to Figure 6.18. Red highlighted chemistries will not run. Yellow highlighted chemistries will run, but check the reagent status before starting. Load new reagent if the reagent volume is not enough to run pending tests.

To display the DxC tab:

1 Select the **Rgts/Cal** icon.

2 Select the DxC tab.

Figure 6.18 Reagent Load/Calibration DxC Tab

E007751S.PNG

This section contains multiple pages. Pages 1-2 are MC reagents; pages 3-8 are CC reagents. You can make load requests simultaneously or independently for the MC and CC sides of the instrument. Load MC and CC reagents while the system status is in *Standby* or *Running*. The system automatically senses the level of reagent in all the cartridges. Reagent status messages are listed in Table 6.6.

Table 6.6 Reagent Status Messages

Message	Description
Load Requested	Reagent position has been requested for reagent load but the system is running.
Parameters Required	Parameters for a reagent cartridge are missing and were not loaded when the cartridge was loaded.
Reagent Ok	No error flags present.
Reagent Expired	Reagent has exceeded shelf life stability date.
Days Exceeded	Reagent has been on system longer than acceptable.
0 Tests Available	Reagent has been used completely; reagent cartridge is empty.
Level Pending	Reagent cartridge has been loaded and is waiting to be level-sensed.
Level Sense Error	Level sense check failed to properly detect reagent in one or more compartments.
n/a	Reagent status is not applicable for a chemistry (for example, an electrolyte chemistry).

Sort Reagent Status

The order in which CC reagents are shown on the DxC tab can vary according to operator selection.

1. Select **Rgts/Cal** from the menu bar.

2. Select the DxC tab. Go to p. 3-8 on the screen.

3. Select **Sort F9**. A dialog box appears.

4. Select the sorting option in which the CC Chems should be shown.
   - Position (on reagent carousel).
   - Chemistry (Lists CC Chems alphabetically. The oldest cartridge is listed on top, for multiple carts of the same Chem.)
   - Tests Left (number of tests left in cartridge). The cartridge with the fewest tests is listed first.
   - Days Left (onboard stability or expiration date, whichever comes first).
   - Cal Time Left (oldest Cal date listed first).

   NOTE The option selected is shown in ascending order or alphabetical order. When the sorting option is selected, the sorting order is retained until the operator changes it.

5 Select **OK**.

Load/Unload Reagent

MC Reagents Information

The DxC System loads and unloads Modular Chemistries (MC) using the bar code system. The reagent bar code information includes:

- Serial Number
- Lot Number
- Expiration Date
- Reagent Name

Figure 6.19 MC Reagent Information

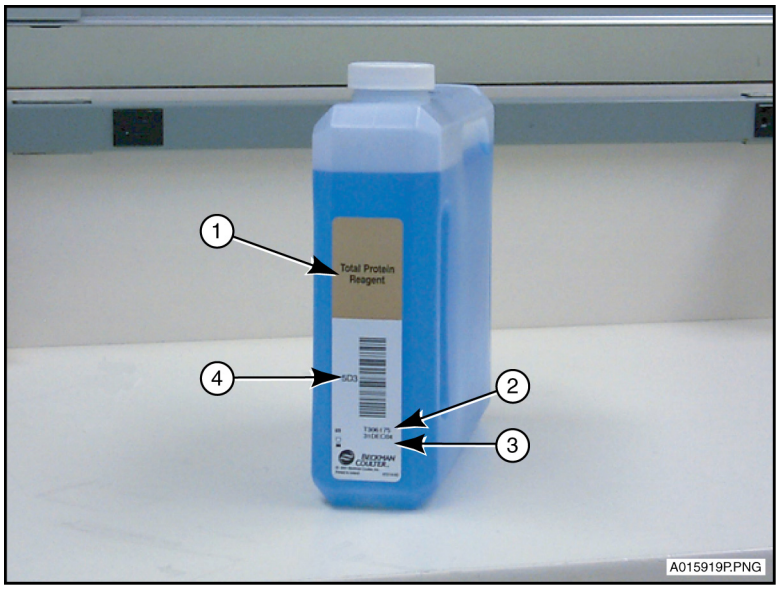

1. Reagent Name
2. Lot Number
3. Expiration Date
4. Serial Number

Reagent information is encoded on the label and read by the bar code reader when the reagent is loaded. This information makes each container unique and allows the DxC to maintain an accurate inventory of MC reagents.

Modular Chemistry (MC) Reagents

The Modular Chemistries (MC) reagents are stored in either 500 mL or 2 L bottles.

Figure 6.20 DxC 800 Leftmost Compartment

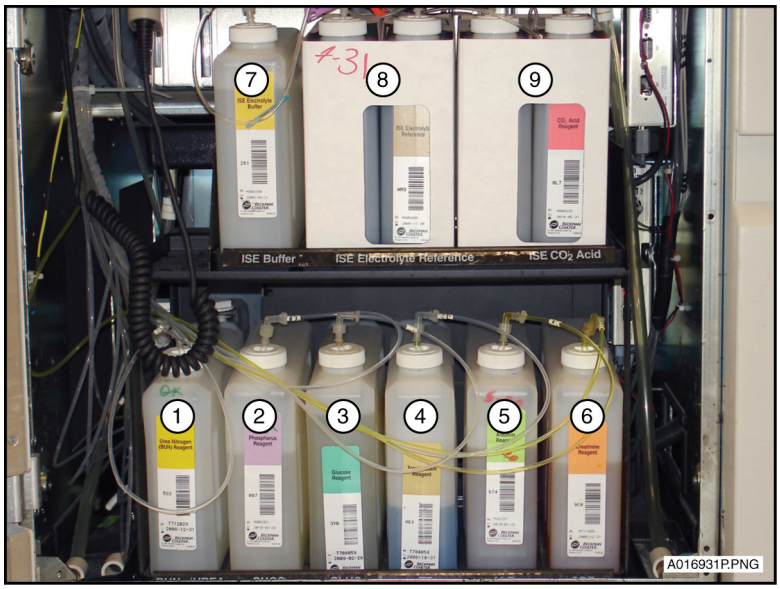

1. BUNm/UREAm
2. PHOSm
3. GLUCm
4. TPm
5. ALBm
6. CREm
7. Electrolyte Buffer
8. Electrolyte Reference
9. CO_2 Acid

Figure 6.21 DxC 600 Leftmost Compartment

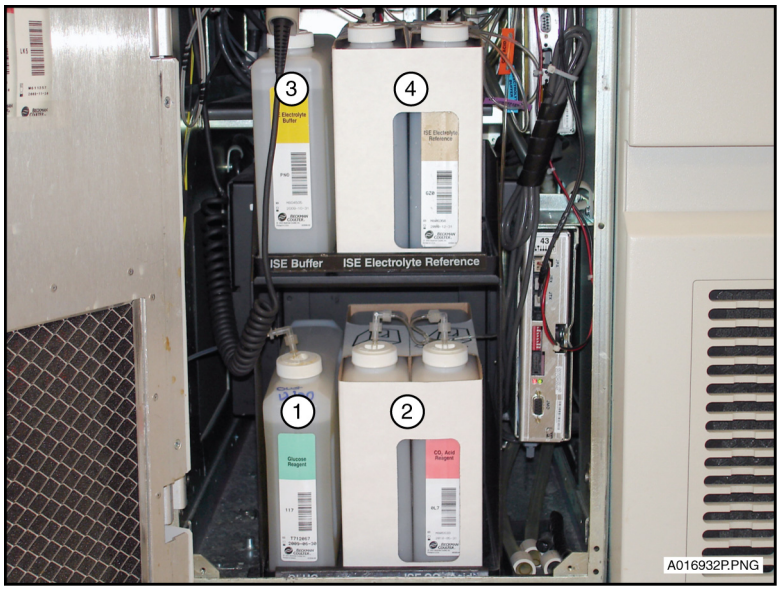

1. GLUCm
2. CO_2 Acid
3. Electrolyte Buffer
4. Electrolyte Reference

Replace Alkaline Buffer

To replace the Alkaline Buffer see Replace Alkaline Buffer.

Good Reagent Handling

Follow these instructions to prevent flow cell contamination.

Figure 6.22 DO -- Disconnect straws from fittings and remove reagents from tray

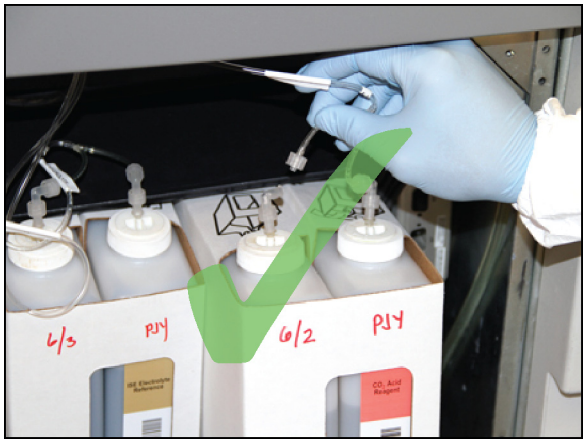

Figure 6.23 DO -- Unscrew caps and place into new reagent bottles without touching straws

Figure 6.24 DO NOT -- Handle straws with dirty gloves

Figure 6.25 DO NOT -- Handle straws with bare hands

Figure 6.26 DO NOT -- Combine reagents

Select modular chemistry reagent bottles from the **Rgts/Cal** screen and replace as necessary according to volume. The system automatically tracks reagent volume levels after you set the initial volume. When you replace a reagent bottle, the system assumes the bottle is 100% full. If the new bottle is not 100% full, you can adjust the volume.

NOTE If you request the DxC analyzer to pause during an MC reagent load, the analyzer can be stuck in the reagent load state. To correct this problem, (1) Press the STOP button, (2) home the DxC analyzer, then (3) repeat the request to load MC reagent.

Load/Unload Modular Chemistries (MC)

IMPORTANT You must wear a CLEAN pair of gloves to load new reagents.

1. Select **Rgts/Cal** from the menu bar.

2. Select the DxC tab. Select the **MC Rgts** button.

3. Select **Load F1**.

4. Open the leftmost door on the DxC to access modular reagents. Refer to Figure 6.20.

   NOTE Wash Concentrate and Auto-Gloss are located behind the DxC center door.

5. Disconnect the straws from the fittings and remove the reagents from the tray. Do not scan the bar code of the reagent bottle when removing it.

⚠ CAUTION

To avoid contaminating the reagent, do not touch the draw tube in the following steps. Handle the cap/draw tube assembly by the cap only. Do not put the straw on the instrument or on the ground. Do not pool reagents.

6. Replace the old bottle with the new bottle. Unscrew the caps of both bottles and place the cap from the old bottle onto the new bottle.

7. Replace the reagents on the tray and connect the fittings to the straws.

8. Use the hand-held bar code reader to scan the reagent bar code of each new bottle. The system “beeps” to indicate a successful bar code read.

Check the monitor to verify that the reagent data shows. When the bar code is scanned, the reagent screen updates with current reagent information. If the bar code can not be scanned, manually clear the reagent by selecting **Clear F1**, type new information (see Figure 6.19).

NOTE The **Lot #** field has 6 characters only. Do not enter the alpha character of the lot number.

9 Close the door and select **Done F10**. For loaded chemistries, continue to Step 10.

10 For loaded chemistries, calibrate and run QC before processing patient samples.

Refill the No Foam Container

The No Foam Container shown in Figure 6.27 (2) is refilled by pouring a fresh bottle of No Foam solution into the empty container on the instrument.

Figure 6.27 No Foam Container (DxC 800 shown)

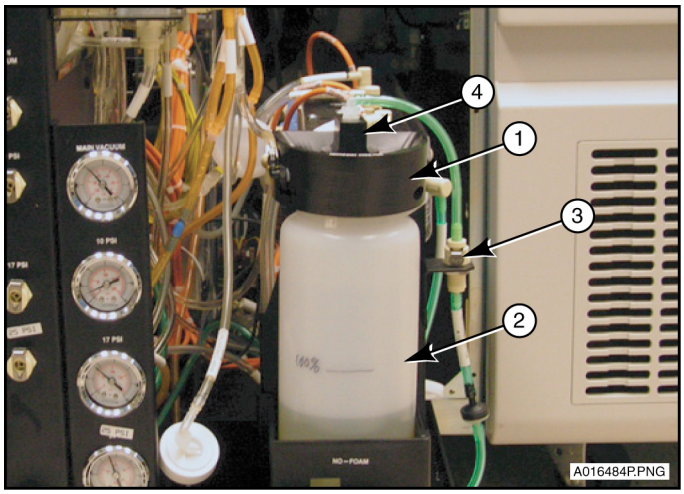

1. Lid
2. No Foam Container
3. Quick Connector
4. Cap

⚠ CAUTION

Wear appropriate Personal Protective Equipment (PPE), including face and eye protection.

The No Foam Container is pressurized during system operation and must be properly depressurized prior to servicing to avoid sudden depressurization and potential exposure of the skin or eyes to the No Foam solution. To release the air pressure, disconnect the white quick connector located at the supply side of the container. If inhaled, move exposed individual to fresh air. If skin or eye contact with the solution occurs, flush the affected area thoroughly with water for at least 15 minutes. In both cases seek medical attention. Refer to the No Foam Material Safety Data Sheets (MSDS) for additional information.

Refer to Figure 6.27 and refill the No Foam Container as follows:

1. Select **Rgts/Cal** from the menu bar.

2. Select the DxC tab. Select the **MC Rgts** button.

3. Select **Load F1**.

4. Open the center door on the DxC to access the No Foam Container.

5. Lift the lever on the hydropneumatic drawer and pull the drawer out.

   NOTE If you pull the drawer all the way out, it will lock. To unlock the drawer, push in the locks on each side of the drawer and push the drawer in.

6. Wipe off any dust from around the top of the No Foam Container lid.

7. Vent the No Foam Container by disconnecting the quick connector (3) at the supply side of the container. Refer to Figure 6.27.

   NOTE The connector may be located on either side of the No Foam Container.

8. Using the No Foam Container Cap Wrench, loosen the Cap (4) of the No Foam Container by turning the wrench counterclockwise.

   NOTE Make sure the wrench is flush with the No Foam cap.

9. Unscrew the cap (4) from the top of the lid (1).

10 Using the hand-held bar code reader, scan the bar code on the new No Foam bottle.

11 Pour the contents of the bottle into the No Foam Container (2).

12 Wipe off any spillage.

13 Replace the cap and hand tighten (4). Do not use the wrench to tighten the cap.

14 Reattach the quick connector (3).

15 Slide the drawer back into the instrument and close the door.

16 Select **Done F10**.

CC Reagents Information

DxC Systems use the cartridge bar code to identify and record data regarding reagent name, lot number, expiration date (for example, 200601), and serial number of the cartridge. Refer to Figure 6.28 and Figure 6.29. Additionally, the system retains calibration status of loaded and unloaded cartridges.

- Reagents can be loaded while the system is *Running* or in *Standby*.
- Check *Chemistry Information Sheets* for reagent preparation instructions.
- Caps must be removed from the cartridge before loading.
- Check cartridges for bubbles in the reagent compartments before loading. Use an applicator stick to remove bubbles.

Figure 6.28 CC Reagent Information

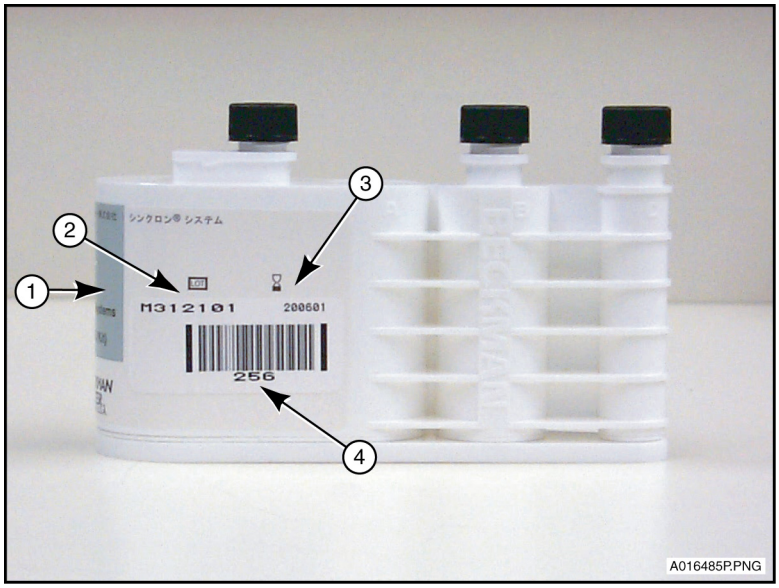

1. Reagent Name
2. Lot Number
3. Expiration Date
4. Serial Number

Figure 6.29 CC Reagent Information

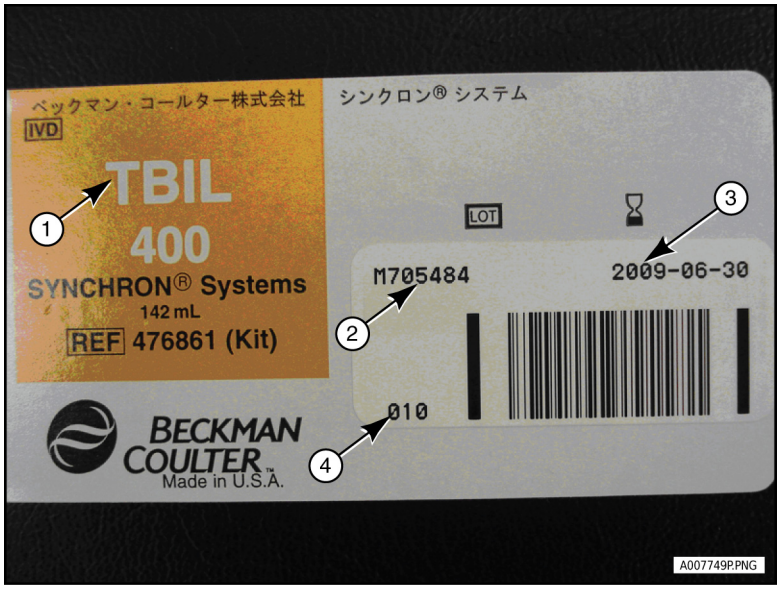

1. Reagent Name
2. Lot Number
3. Expiration Date
4. Serial Number

Load/Unload Cartridge Chemistries (CC)

1 Select **Rgts/Cal** from the menu bar.

2 Select the DxC tab.

3 Select all positions to be loaded or unloaded. The selected positions are highlighted. Use the up and down arrows to access screens for additional chemistries.

4 Select **Load F1**.

5 To unload reagent:

- When the screen prompts you to remove the cartridge (1), open the reagent carousel door. The cartridge to unload is positioned on either the upper or lower reagent carousel. A blinking bar code reader indicates which carousel position to unload from the upper and lower reagent carousel. Top positions (2) are 31 to 59. Bottom positions (3) are 1 to 30. Grasp the cartridge at top and bottom, lift up a little and pull back. Refer to Figure 6.30.
- As the cartridge is moved in front of the bar code reader, a beep will indicate that the bar code is read. Check the screen to verify reagent data is removed from the position selected. If the bar code does not read, manually clear the position. To manually clear, select **Clear F1**.

Figure 6.30 Reagent Carousel

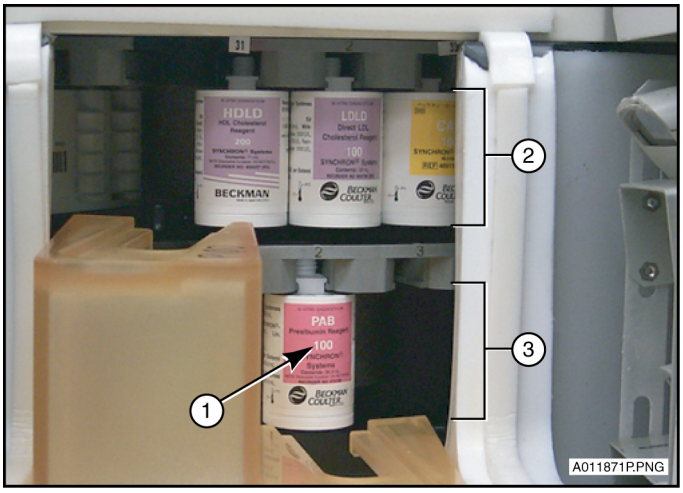

1. Cartridge
2. Top Positions
3. Bottom Positions

6 To load reagent:

- When the screen prompts you to load the cartridge, open the reagent carousel door. Move the cartridge in front of the bar code reader. A beep indicates that the bar code is read.
- Check the screen to verify reagent data is added to the selected position. If the bar code does not scan, enter the new information (see Figure 6.28 and Figure 6.29).

  NOTE This field has 6 characters only. Do not enter the alpha character of the lot number.

7 Close the reagent carousel door.

8 If multiple positions are selected to load or unload, repeat step 4-6.

9 Before you process samples, calibrate and run QC if needed.

Reagent Parameters

Calibration parameters specific for a particular reagent lot are included with certain multipoint, non-linear reagent cartridges. These parameters are referred to as Reagent Lot Specific Parameters. The Reagent Lot Specific Parameters, contained in four bar codes, are included on a card in the Reagent Kit.

These parameters:

- are loaded as part of a reagent load whenever the parameters are not found in the database.
- can be loaded using the hand-held bar code reader or entered manually.

Load Reagent Parameters

1 Select **Rgts/Cal** from the menu bar.

NOTE If parameters are loaded as part of the reagent cartridge load, proceed directly to step 3.

2 Select the DxC tab.

3 Select **Params F2**.

4 After the reagent cartridge loads successfully, a **Load Reagent Parameters** dialog box appears. Enter data for cartridges that require parameter entry.

To automatically load reagent parameters:

- Use the hand-held bar code reader to scan each of the four bar codes.

- The blue bar indicator on the number button indicates the parameter was scanned successfully.

Unacceptable bar codes are not read and a message appears.

5 To manually load reagent parameters:

- Type the parameter information, from the parameter card, on each line of the **Load Reagent Parameters** dialog box.

  NOTE Readable parameters coincide with each bar code on the card.

- The blue bar indicator on the number button indicates the parameter was entered successfully.

6 Select **Done** to exit and save information.

CHAPTER 7

Calibration

Introduction

NOTE This chapter applies to the DxC analyzer only. To request a calibration for the DxI analyzer, complete DxI assay calibration information can be found in the DxI online Help.

System calibration is used to standardize the analysis of samples to existing conditions. Refer to the Synchron Clinical Systems *Chemistry Information Sheets* for detailed information regarding such conditions. In general, system calibration is required when:

- A new Cartridge Chemistry (CC) reagent cartridge is used (except when within lot calibration applies).
- A new Modular Chemistry (MC) reagent is loaded.
- At recommended calibration frequency intervals.
- Indicated by control results.
- Defined per your laboratory policy.
- Electronic or module adjustment is performed.
- A Calibration set point is modified.
- Specific maintenance procedures as defined in CHAPTER 12, *Maintenance* of this manual are performed.

Calibration options are identified in the Cal Options box. To access a cal option, select **Options F6** from the Reagent Status screen. Then select the pull-down menu in the Cal Options box to select the desired cal option. The cal options are:

- Load Calibrator from External Media
- Calibrator acceptance limits
- Modify set points
- Slope/offset adjustment
- Within lot calibration
- Enzyme validator
- Calibration override
- Bypass chemistry
- Extend calibration time

- Print cal report
- Archive Calibration

Load Calibrator from External Media

Some serum based calibrators require calibrator information to be loaded on the system. This information comes from a calibrator diskette packaged in the calibrator box. The calibrator information needs to be loaded only one time per lot number.

- To check what lot number is currently loaded on the system, select the **Rgts/Cal** icon from the menu bar, then select **Options F6**. Use the pull-down menu to select "Calibrator Acceptance Limits." To find the calibrator, use either the **Prev** and **Next** button or use the pull-down menu and select the calibrator name.
- To load a new lot number of calibrator, locate the calibrator diskette in the calibrator box and follow the procedure below.

The DxC must be in *Standby*.

1. Select **Rgts/Cal** from the menu bar. Select the DxC tab.
2. Select **Options F6**.
3. From the menu select **Load Calibrator from External Media**.
4. If you are using a diskette, verify that the lot number on the diskette is the same as the lot number on the calibrator bottle. Insert the diskette into the DxC console disk drive. Select **OK**.
5. Remove the external media from the drive.
   - If no other information needs to be loaded,
     - Select **Cancel**.
   - If additional calibrator information need to be loaded,
     - Select **OK** and repeat step 5.

Calibrator Assignment

To calibrate a reagent, first assign the rack/position or calibrator ID (bar code label). The assignments can be reused or new assignments can be programmed with each new calibration. The calibration racks must be properly defined for the container you are using.

1. Select **Rgts/Cal** from the menu bar. Select the DxC tab.
2. Select **Assign F7**.
3. Use the down arrow option button to open list of calibrators.
4. Select the calibrator.
5. Enter the calibrator ID or the rack/position number.
   - If using a bar code label, the label must match the assigned calibrator ID.
   - If a rack/position is assigned, the calibrator must be placed in this assigned position.
6. Repeat steps 3-5 to assign additional calibrators.
7. When calibration assignment is complete, select **Close**.

Calibration Status

Introduction

Access calibration status and reagent status from the Rgts/Cal screen. Review calibration status to determine which chemistries require calibration.

Calibration Status Messages

Table 7.1 Calibration Status Messages

Message	Explanation
Requested	Indicates that calibration is pending and calibrators have been identified.
Calibrated	Indicates that the chemistry has been calibrated and has not exceeded its calibration time period.
Cal Required	Appears when: • a new cartridge is loaded. • a user-defined cartridge is loaded. • a non-overrideable calibration failure has occurred.
Cal Overridden	Operator-initiated; results are based on the failed calibration.
Chem Bypassed	Operator-initiated; allows analysis to proceed on all other chemistries without having to deprogram the bypassed chemistry. A bypassed chemistry can be recalibrated, but not extended or overridden.
Cal Failed	Indicates that calibrator values for a chemistry have exceeded calibration acceptance limits.
Cal Timed Out	Indicates time remaining has exceeded the recommended calibration period.
Cal Time Extended	Operator-initiated; indicates that the recommended calibration period has been extended. The chemistry must have a valid current calibration to be extended.
Within Lot Pending	Indicates calibration has been requested for another cartridge with the same lot number. Applies only to chemistries with within lot capability.
Disabled	System-initiated or operator-initiated; allows analysis to proceed on all other chemistries without having to deprogram the disabled chemistry. To continue to process a disabled chemistry, the operator must enable the chemistry through the **Instr Cmd** icon. When the disabled status is removed, the chemistry returns to the current calibration status.
n/a	Indicates calibration does not apply.

Reagent and Calibration Status Warnings

Introduction

When a reagent or chemistry calibration needs attention, a yellow or red warning highlight appears in the applicable place on the **Reagent Status/Calibration Status** dialog box.

The highlight color depends on the reagent or calibration status.

Conditions that Cause a Calibration Status Warning

The table below lists the Calibration Status conditions and their related highlights.

Table 7.2 Conditions and Highlights for Calibration Status Warnings

IF the Calibration Status has...	THEN the Highlight is...	Which Means...
Cal Required	Red	The chemistry cannot be processed now.
Chem Bypassed		
Cal Failed		
Cal Timed Out		
Disabled		
Cal Overridden	Yellow	The chemistry needs attention, but the process can continue.
Cal Time Extended		
No warning condition or N/A	—[a]	The chemistry is OK and the process runs normally.

a. — = No Highlight

Request a Calibration

See Calibrate DxC Chemistries.

Cancel a Calibration Request

1. Select **Rgts/Cal** from the menu bar. Select the DxC tab.
2. Select the appropriate requested chemistries to be canceled.
3. Select **No Cal F8** to cancel calibration request.

Chemistries currently selected and programmed for calibration may be canceled only if the calibration is not yet in progress.

Calibration reports for a given calibrator do not print until all calibrations are complete for each chemistry requested.

Calibration Failure Messages

Introduction

If there is a failure during calibration, for modular chemistry (MC) or cartridge chemistry (CC), there is a pop-up message which shows:

- The chemistry that failed and
- The associated error code(s).

NOTE If there is a DxI calibration failure, the system displays a yellow error log message.

CC Subsystem Calibration Failure

The CC subsystem warns the operator of a failed calibration. If a chemistry fails, a pop-up message appears after a completed calibrator level. The message includes:

- Calibrator name
- Chem name
- Reagent Position

MC Subsystem Calibration Failure

The MC Subsystem warns the operator of a failed calibration. If a chemistry fails, a pop-up message appears after a completed calibrator level. The message includes:

- Chem name
- Calibration error
- Calibrator Name and Level Number

IMPORTANT Refer to CHAPTER 13, *Troubleshooting Calibration and Result Errors* for additional information on Calibration Error messages.

Within Lot Calibration

Introduction

The Within Lot Calibration option provides multiple reagent load of cartridges of the same lot number without having to calibrate each cartridge. The calibration factor established from a fresh cartridge (less than 8 hours on board the instrument) is stored and applied to subsequently loaded cartridges of the same lot.

Within Lot Calibration Frequency

The length of time a within lot calibration factor remains valid (its within lot calibration frequency) depends on the chemistry. During this interval any newly loaded cartridge with the same lot number will receive the calibration status *Calibrated*. At the end of this frequency period, a new within lot calibration factor must be established from a fresh cartridge.

The calibration frequency of a particular cartridge has priority over the within lot calibration frequency. If a cartridge selected for within lot calibration is still loaded at the end of its individual calibration frequency period, that cartridge must be recalibrated (this will not affect the within lot calibration factor).

Enable Within Lot Calibration

The system status must be *Standby*.

1. Select **Rgts/Cal** from the menu bar. Select the DxC tab.
2. Select **Options F6**.
3. Select **Within lot calibration** from the pull-down menu.
4. From the **Configured Chemistries** list, select a desired chemistry name. Refer to Figure 7.1.
5. Select **Add** to move the chosen Chemistry to the **Selected Chemistries** area.
6. Repeat steps 4 and 5 for other chemistries, if appropriate.

7 Select **OK** to enable the within lot option for the selected chemistry.

Figure 7.1 Within Lot Calibration Dialog Box

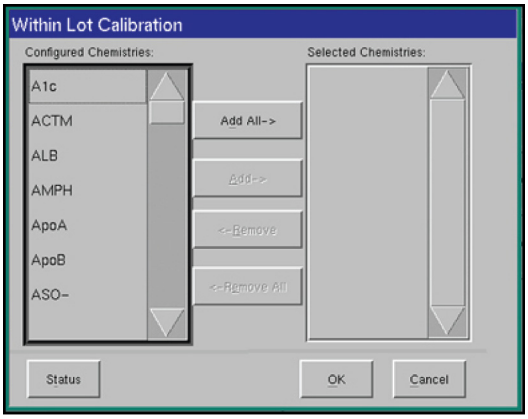

E007752S.PNG

NOTE If the within lot calibration mode is disabled for a chemistry, any existing cartridges that are using the within lot calibration factor will retain that factor until the cartridge is depleted or until another calibration is requested. When a chemistry is deselected, the following message appears:
"*If chemistries are deselected, a new calibration factor will need to be generated for all subsequent reagent packs loaded. Do you want to save changes to within lot chemistries?*"

Within Lot Calibration Status Screen

The Within Lot Calibration Status screen has a summary of the within lot calibration time which remains. This summary is for the cartridge chemistry/lot number combinations that have within lot calibration factors applied.

1 Select **Rgts/Cal** from the menu bar. Select the DxC tab.

2 Select **Options F6**.

3 Select **Within lot calibration** from the pull-down menu.

4 Select **Status**.

The within lot chemistries appear by the within lot calibration time remaining, the oldest calibration date listed first. The lot number and the serial number of the cartridges are shown. Refer to Figure 7.2.

5 Select **Close** to exit the pop-up window and return to the Within Lot Calibration screen.

Figure 7.2 Within Lot Calibration Status Screen

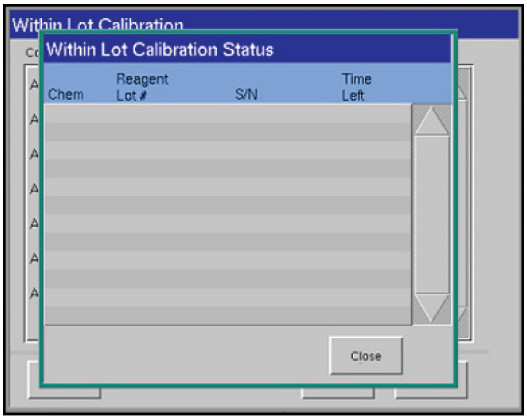

E007753S.PNG

6 Select **Cancel** to return to the **Reagent Status** and **Calibration Status** screens.

Within Lot Designations

The designations *wf, w*, and *ws* follow the reagent lot numbers of those chemistries selected for within lot calibration. These designations are defined below.

Table 7.3 Definitions of Within Lot Designations

Designation	Description
wf	Reagent has been enabled for within lot calibration and the cartridge has been "freshly" loaded. Any *wf*-designated cartridge can be used to establish a within lot calibration factor. A cartridge receives this designation if: • it was loaded onto the system for the first time after within lot calibration was turned on. • no more than 8 hours have lapsed since it was first loaded onto the system.

Table 7.3 Definitions of Within Lot Designations *(Continued)*

Designation	Description
w	Reagent has been enabled for within lot calibration. A cartridge receives this designation if: • it was loaded for the first time after a within lot calibration was established. • more than 8 hours have lapsed since it was first loaded onto the system.
ws	Reagent has been enabled for within lot calibration but is a stand-alone (the calibration factor currently used applies only to this cartridge). A reagent receives this designation if: • the cartridge was loaded before the within lot calibration function was turned on. • more than 8 hours have lapsed since the cartridge was first loaded (it has a *w* designation), and the cartridge is recalibrated. • more than 8 hours have lapsed since the cartridge was first loaded (it has a *w* designation) and a fresh reagent of the same lot is calibrated for within lot use. • the calibration status for the reagent becomes *Cal timed out*. • within lot calibration expires.

Within Lot Calibration Limitations

Only one within lot calibration factor per lot can be stored in memory. Any time a fresh cartridge is calibrated for within lot use, the previous within lot calibration factor is overwritten.

Table 7.4 Reagent Calibration Requirements

If...	Then...
a newly loaded cartridge has the same lot number as a cartridge with previous within lot calibration,	the new cartridge automatically receives the correct calibration status; calibration is not necessary.
the calibrator set point is modified,	within lot calibration factor is lost and the calibration status becomes *Cal Required*. This does not apply to the slope and offset adjustment.
the lot number of the reagent is new to the system,	calibration status is *Cal Required* for all cartridges of that lot on the system.

IMPORTANT When you start to do a calibration on a fresh cartridge, you must complete it within 8 hours.

Enzyme Validator

Introduction

The Enzyme Validator option provides the ability to obtain IFCC/DGKCh (refer to Additional Information below) equivalent answers for selective enzymes, or to obtain IFCC/DGKCh equivalent answers for the non-IFCC/non-DGKCh formulation enzymes.

- The Synchron Enzyme Validator set is a human serum, albumin-based value assigned material and is used like a calibrator.
- The feature can be turned on or off for applicable chemistries; the default is off.
- The Enzyme Validator Kit includes diskettes which provide set points for the selective enzymes.

IMPORTANT When the enzyme reagent is configured and loaded, and the Enzyme Validator feature turns on, Enzyme Validator ID assignments and calibration requests can be performed in the same manner as any calibrator. See Calibrator Assignment and Request a Calibration.

1. Select **Rgts/Cal** from the menu bar. Select the DxC tab.
2. Select **Options F6**.
3. Select **Enzyme Validator**.
4. From the **Configured Chemistries** list, select a desired chemistry name.
5. Select **Add** to move the chosen Chemistry to the **Selected Chemistries** area.
6. Repeat steps 4 and 5 for other chemistries, if appropriate.
7. Select **OK** to enable the Enzyme Validator option for the selected chemistry.

Additional Information

DGKCh (Deutsche Gesellschaft für Klinische Chemie - German Clinical Chemistry Association)

IFCC (International Federation of Clinical Chemistry), a committee that establishes formulation standards in Europe.

Calibration Override

Introduction

This section applies to the DxC only, for DxI overriding options see the DxI console help.

The Calibration Override option allows the system to override a failed calibration and obtain results based on the failed calibration factors. *Calibration Override* is available only when an attempt to calibrate the chemistries has been previously made and failed, the status *Cal Failed* is shown. A chemistry with any other status, including *Cal Required*, cannot be overridden. The calibration can be overridden while the system status is *Standby* or *Running*.

IMPORTANT Overriding a calibration is not usually justified. However, there may be an emergency situation when a delay caused by calibration is unacceptable to the laboratory. The magnitude of error which is deemed acceptable when overriding a failed calibration is totally under the control of the laboratory. Therefore, the Override function should be used with caution.

Override a Calibration

1. Select **Rgts/Cal** from the menu bar. Select the DxC tab.
2. Select the Chem position to override.
3. Select **Options F6**.
4. Select **Calibration override** from the pull-down menu.

Remove Cal Overridden Status

The Cal Overridden status can only be removed by successfully recalibrating the chemistry or by selecting Chem Bypass. A flag indicating that a particular chemistry has been overridden will appear in the Instrument Code area on the appropriate Summary or Patient Chartable Results report. Although a Cal Overridden status can be bypassed, the Cal Overridden flag is only removed by a successful calibration.

Chemistry Bypass

Introduction

In the event of a chemistry or system issue, Chemistry Bypass permits the continuation of analysis of programmed tests without having to deprogram a problematic chemistry. The chemistry can be bypassed while the system status is *Standby* or *Running*.

- The system will not aspirate sample or dispense reagents for bypassed chemistries. They will not be marked as *Pending*.
- Bypassed chemistries are logged on the Post-Run Summary Report.
- Bypassed chemistries must be calibrated to process samples.

Bypass a Chemistry

1. Select **Rgts/Cal** from the menu bar.
2. Select the Chem position to bypass.
3. Select **Options F6**.
4. Select **Bypass chemistry** from the pull-down menu.

Remove a Bypassed Status

Recalibrate the chemistry to remove a bypassed status.

Extend Calibration Time

Introduction

The Extend Calibration Time option allows the extension of a calibration that has exceeded the recommended calibration time. The system shows a warning message approximately fifteen minutes prior to the calibration timeout. At this point, the operator can recalibrate the chemistry in question or extend the calibration time.

A calibration time can be extended if the current calibration for the chemistry:

- is valid but timed out
- is valid and not yet timed out

Extend Cal is not allowed if calibration has already been requested. If a chemistry is allowed to time out, subsequent results will not be processed; however, extending the calibration time will allow results to process and print.

Extend Calibration Time

1. Select **Rgts/Cal** from the menu bar.
2. Select Chem position to extend.
3. Select **Options F6**.
4. Select **Extend calibration time** from the pull-down menu.

   The calibration status will show the updated information. A flag indicating that calibration time has been extended will appear in the Instrument Code section on the appropriate Summary or Patient Chartable Results report.

Remove an Extended Status

Calibration extension is indefinite. Recalibrate chemistry to remove an extended status.

Calibration Acceptance Limits

Introduction

Calibration absorbance or ADC values are compared to preprogrammed back-to-back, span, and range limits to determine acceptable performance. If calibration errors in accuracy, precision, sensitivity, or linearity are detected by the system computer, error flags are generated. Calibration Acceptance provides a reference to the acceptable limits for calibration.

View Calibrator Acceptance Limits

1. Select **Rgts/Cal** from the menu bar.
2. Select **Options F6**.
3. Select **Calibrator acceptance limits** from the pull-down menu.

   Chemistries appear with chemistry name, setpoint value(s), and appropriate limits.
4. Select **Next** or **Prev** to locate the calibrator of interest.

   OR

   Select the **Calibrator Name** pull-down menu at the top of the screen to view the List of Calibrators.
5. Select **Close** to exit the screen.

Calibrator Set Point Modifications

Introduction

The Calibrator Set Point Modifications option allows editing of the programmed calibrator set points, except for user-defined chemistries. This option can be used to alter any chemistry provided it:

- has calibration data.
- uses three or less calibrator levels.
- is configured on the system.

IMPORTANT The user-defined chemistry set points must be modified within the user-defined parameters setup.

Modify Calibrator Set Points

IMPORTANT Altering a programmed calibrator set point is not usually justified. However, there may be a situation when a calibration value needs to be reassigned. Set Point Modification should not be used routinely to correct instrument correlation. The magnitude of error which is deemed acceptable when modifying a set point is totally under the control of the laboratory and, therefore, the Set Point Modification function should be used with caution.

1. Select **Rgts/Cal** from the menu bar.

2. Select **Options F6**.

3. Select **Modify set points** from the pull-down menu.

4. Select **Next** or **Prev** to locate the calibrator of interest.

   OR

   Select the **Calibrator Name** pull-down menu at the top of the screen to view the List of Calibrators.

5. Move the cursor to the set point to be modified and type the desired value.
   - If a previously modified set point is to be returned to the original default value for that chemistry, select desired chemistry button and then select **Restore Defaults** button. Select **OK** to confirm.
   - The default values have more significant figures than shown on the screen. Therefore, select **Restore Defaults**, rather than typing the default values.

6 Select **Close** to exit the screen.

- Calibration status changes to *Cal Required*.
- A flag indicating that specific set points have been modified will appear in the Instrument Code section on the results report.

Slope/Offset Adjustment

Introduction

The Slope/Offset Adjustment option allows adjustment of the slope (m) or the y-intercept offset (b) of the regression equation used for results calculations. Modifications are made on a per chemistry basis. The default value for the slope is equal to "1" and the default value for offset is equal to "0."

IMPORTANT Adjusting the slope and offset for a chemistry may result in a mismatch of normal range values previously established.

Slope/Offset Recommendations

When slope and offset modification is desired, the slope and offset values to be used must be experimentally derived from statistically significant patient correlation studies. It is recommended that patient samples are run over a period of several days by both methods, using controls to monitor accuracy. A good range of data should be achieved by analyzing below normal, normal, and above normal samples. Patient sample data (only) should be used for linear regression analysis with Synchron values as *y* values and other method values as *x* values. A minimum of 40 patient samples is recommended. From this analysis, the regression equation in the following form is obtained:

$$y = mx+b$$

where:

y	=	Synchron value
x	=	other method value
m	=	slope of regression line
b	=	y-intercept of regression line (offset)

To obtain the desired slope and offset values for entry into the **Slope/Offset Adjustment** screen, the equation above must be rearranged as follows:

$$x = (y - b) / m$$
$$x = (y \times 1 / m) + (-b / m)$$

Slope = 1 / m (value to be entered)

Offset = -b / m (value to be entered)

The Synchron values need to be multiplied by the slope value and then the offset value is added:

Reported sample result = Synchron calculated sample result x (slope) + offset.

1 Select **Rgts/Cal** from the menu bar.

2 Select **Cal Options F6**.

3 Select **Slope/Offset adjustment** from the pull-down menu.

4 Move cursor to the slope and/or offset to be modified.

OR

Press (Page Up) or (Page Down) from the keyboard or use the screen scroll bar to locate the Chem. Type the desired value in the appropriate **Slope** and **Offset** fields.

- If a previously modified slope or offset is to be returned to the original default value for that chemistry, select the desired chemistry button and then select the **Restore Defaults** button. Select **OK** to confirm.

5 Select **Close** to exit screen.

Reprint Calibration Reports

Introduction

This section applies to the DxC only. To review or print DxI calibration reports, see the DxI online Help.

The five most recent calibration reports for a given calibrator (chem position) may be printed for an historical perspective.

Reprint Current Calibration Reports

1 Select **Rgts/Cal** from the menu bar.

2 Select the chem position(s) to print.

NOTE When requesting reports of recent MC calibrations, select only one chemistry per report format. This prevents duplicate copies. For example, if NA is selected, the report contains all five ISE chemistries.

3 Select **Options F6**.

4 Select **Print cal report** from the pull-down menu.

5 Select **Current Cal Report** from the Print cal report dialog box. The report(s) automatically prints.

Reprint Previous Calibration Reports

1 Select **Rgts/Cal** from the menu bar.

2 Select **Options F6**.

3 Select **Print cal report** from the pull-down menu.

4 Select **Previous Cal Report(s)** from the Print Cal Report dialog box.

5 Select the desired Configured Chemistry name(s) from the Previous Calibration Report dialog box.

NOTE When requesting reports of recent MC calibrations, select only one chemistry per report format. This prevents duplicate copies. For example, if NA is selected, the report contains all five ISE chemistries.

6 Select **Add** to move the chosen Chemistry(ies) to the Selected Chemistries area, then select **OK**.

7 Select 1, 2, 3, 4 or 5 most recent reports to print from the Print Previous Calibration Report dialog box. The report(s) automatically prints.

Archive Calibration

Introduction

This section applies to the DxC only. To archive DxI calibration reports, see the DxI online Help.

The DxC system can store up to 200 days of calibration data. On the 200th day, any new calibration report will overwrite the oldest calibration report in the archive directory on the hard disk. When 180 days have passed since the last calibration archive, the system displays warning messages that the oldest calibration reports will soon be deleted. (You can disable these messages through Archive Calibration Setup.)

To preserve calibration data, use the Archive Calibration function to save calibration reports to external media (USB). You cannot view calibration data that had been archived to external media on the DxC console. You can view or print the data from another PC.

NOTE Once calibration reports are archived, the system deletes them from the hard drive. This does not affect the Reprint Previous Calibration Reports feature.

Archive Calibration Reports

1. Select **Rgts/Cal** from the menu bar.
2. Select **Options F6**.
3. Select **Archive Calibration** from the pull-down menu. The system displays the Archive Calibration dialog box.
4. Attach a USB to the USB port of the DxC computer and select **OK**. The system displays a progress bar as it downloads the calibration reports.
5. Do not remove the USB until the system displays the message that archiving is complete. When the system displays the message, remove the USB and select **OK** to return to the **Rgts/Cal** screen.

CHAPTER 8

System Status, Instrument Commands, and Utilities

Overview

The System Status, Instrument Commands, and Utilities features provide real-time summaries and control of essential instrument components for the DxC analyzer and the UCTA.

NOTE This chapter does not include information and controls for the DxI analyzer. For equivalent DxI functions, see the DxI console and the DxI Online Help.

System Status

Introduction

Status Summary provides a high level summary of the status of the system temperatures, power, hydropneumatic, and ICS/Smart Module components on a real-time basis in that all parameters are updated every eight seconds. Cycle count information and cuvette cleanliness data are also provided.

IMPORTANT The **Status** icon on the menu bar is highlighted whenever a warning or error condition exists on the Status screen. A highlighted status icon should be investigated by the operator, as further action may be necessary to correct the warning or error condition.

Show Status Summary

1. Select **Status** from the menu bar.
2. A summary of the monitored areas appears.

Possible Status Messages

The following table lists the possible status messages and their meanings.

Table 8.1 Status Messages

Status	Description
Error	Parameters which exceed allowable limits are called errors. If any of the parameters in a monitored area exceed the allowable limit, *Error* appears with a *red* highlight.
Warning	Parameters which are out of recommended limits but still within allowable limits are called Warnings. If any of the parameters in a monitored area are out of recommended limits but still within allowable limits and there are no other parameters that are in a error condition, *Warning* is shown with a *yellow* highlight. Not all parameters have both a recommended range and an allowable range.
OK	If all of the parameters are within limits, *OK* is shown.

NOTE If any of the monitored areas show a *Warning* or *Error* status, select the tab for that area. This shows each parameter for the monitored area and indicates the specific parameter that is out of limits.

Return to Status Summary

When viewing the detailed status information, it is possible to return to the Status Summary by selecting the **Summary** tab.

Status-Cycle Count

Introduction

The Status-Cycle Count provides an approximation of an instrument's usage. This information can be useful for estimating maintenance frequencies or anticipating component failure. Cycle counts may be periodically collected by Beckman Coulter using the instrument modem.

Show Cycle Count

1. Select **Status** from the menu bar.
2. Select the **Count** tab. A summary of the monitored areas appears.

Cycle Count Description

Table 8.2 Counters

Counter	Description
Modular Chem	Each result for each cup is counted separately. Even if ORDAC is triggered, the counter only increments for the one result.
ISE	A count of the number of samples run through the ISE module. Whether it is a single chemistry per sample or a sample running all five chemistries, the ISE cycle count increments only one time per sample processed through the ISE module.
Cartridge Chem	Each cartridge chemistry reagent dispensed is counted.
Blade Count	• This is the number of caps pierced by the blade(s). • For 1-Blade CTS, the system sets this counter to zero when the blade is replaced. To replace the blade for 1-Blade CTS, refer to CHAPTER 12, *Maintenance*.
CTS Count	The total number of caps pierced by the Cap Piercer Module.
Sample Count	The total number of sample containers that have been scanned by a sample ID bar code reader.
UCTA Rack	The total number of racks loaded onto the UCTA sample carousel (including both those from which the UCTA aliquots samples and those it transfers to the DXC).
UCTA Aliquotter	The total number of aliquots made by the UCTA, including both probes.
ISE Ratio Pump Count	The total number of ISE Ratio Pump cycles when it aspirates and dispenses reagents, regardless of volume. The Ratio Pump must be replaced before 240,000 cycle counts by a trained BCI representative.

Temperatures

Introduction

The actual temperature of each of the various components is shown along with:

- the valid range.
- parameters that are out of limits.

A *yellow* highlight indicates a warning condition and a *red* highlight indicates an error condition.

IMPORTANT While the system is in the *Stopped* state, temperatures will not be accurate. If the system boots directly into the *Stopped* state, no temperatures are shown for the systems that caused the *Stopped* state. If the system goes to *Stopped* from *Standby* or *Running*, the temperatures shown reflect the previous state and will NOT be updated while the system is *Stopped*.

Show Temperature Status

Follow the steps below to monitor instrument components (for example, reaction carousel, cups, cuvette wash).

1. Select **Status** from the menu bar.
2. Select the **Temp** tab. A summary of the monitored areas appears.

Power Subsystems

Introduction

Status for the Power Subsystem shows:
- the actual voltage for each power distribution bus with the valid range.
- the status of the power supplies, peltiers and fans.
- parameters that are out of limits.

A *yellow* highlight indicates a warning condition. A *red* highlight indicates an error condition.

Also shown is the status of the eight power supplies - OK, Warning, or Error with the same highlight colors.

Show the Power Subsystem Status

1. Select **Status** from the menu bar.
2. Select the **Power** tab. A summary of the monitored areas appears.

Hydropneumatics Subsystem

Introduction

Status for the Hydropneumatics Subsystem shows the status for all of the reservoirs, canisters, and sumps. A *yellow* highlight indicates a warning condition and a *red* highlight indicates an error condition.

The following parameters are shown:

- external DI water system status, if enabled.
- status of the various hydro float switches.
- DI water resistivity measured on the instrument and its valid range.
- actual air and vacuum pressures and their valid ranges.

Show the Hydropneumatics Subsystem Status

1 Select **Status** from the menu bar.

2 Select the **Hydro** tab. A summary, by component name, of the monitored areas appears.

What to Do If a Parameter is Out of Limits

The range for air and vacuum levels are only valid when the system is in *Standby* and the hydropneumatics are on. The hydropneumatics are automatically turned off after the system has been in *Standby* for more than 15 minutes. While the hydro is off, all pressure and vacuum readings show zero and a status of *OK*. To turn the hydro back on, either select a prime or press the DxC **RUN** button. Values fluctuate while the system is running.

For adjustment of the air and vacuum pressures, refer to the UniCel DxC Synchron Clinical Systems *Reference Manual*. If the Waste B exit sump shows *Paused*, it has been stopped either automatically by the system when the Waste B container is full, or by operator request. For additional information, refer to Pause/Resume Waste B in this chapter.

Cuvette Water Blank Status

Introduction

Cuvette Water Blank Status identifies cuvettes that have failed water blank. The Cuvette Water Blank Status screen displays absorbance readings at each wavelength for each cuvette. The **Fcnt** column identifies the number of consecutive failures for a cuvette, highlighted in red.

Show the Cuvette Water Blank Status

1 Select **Status** from the menu bar.

2 Select the **CuvStat** tab. The system displays the Cuvette Water Blank Status screen.

ICS/Smart Modules

Introduction

ICS/Smart Module status monitors the power to the Smart Modules and the ability to communicate to and from the Smart Module. Should the Smart Module lose power or the ability to send or receive messages, an error appears.

Show the ICS/Smart Module Status

Follow the steps below to view the status of instrument components (for example, Reagent Probe, cup modules). A *yellow* highlight indicates a warning condition and a *red* highlight indicates an error condition.

1 Select **Status** from the menu bar.

2 Select the **SmrtMdl** tab. A summary of the monitored areas appears.

CTS Tracking

Introduction

The CTS Tracking feature is used with DxC instruments that have the 1-Blade CTS option. It makes sure that a sample tube is only pierced one time. This feature operates when up to four DxC instruments are connected in a network.

NOTE If notified that CTS Tracking is lost, remove the cap of a sample tube before moving it to another instrument.

Do Not Clear the Sample ID Manually

Before you run a sample whose cap has been pierced, be sure that its sample ID has not been cleared.

- If you clear a sample ID at the Host the sample ID is NOT cleared in the CTS Tracking database.
- If you manually clear the sample ID for a tube, the sample ID IS cleared in the CTS Tracking database. The instrument will treat the sample as if it was a new tube and will pierce its cap again.

For each DxC instrument in the network, CTS Tracking status shows its:

- Serial number
- Last update (day, date and time)
- Instrument status

Show the CTS Tracking Status

1. Select **Status** from the menu bar.
2. Select the **CTS** tab. The CTS Tracking status of the instruments in the network appears.

What to do if a Parameter is Out of Limits

If a status is other than OK, examine the network for:

- A loose connector
- A break in the network cable or
- A console error

Instrument Commands

Instrument commands are high level system commands that are used to control the instrument and printer.

Commands

Select **Instr Cmd** from the menu bar.

The following commands are available:

- **Home** – moves all mechanical assemblies to a known position.
- **Pause** – DxC: stops additional tests from starting; any tests with reagent already added will complete. UCTA: stops additional aliquots.

- **Stop Print** – prevents print requests in the queue from being sent to the printer.
- **Shutdown** – restarts the system (warm boot) or safely powers off the system.
- **Pause Waste B** – allows the external Waste B container to be emptied while the system is running.
- **Resume Waste B** – resumes the dumping of Waste B to the external container.
- **Enable/Disable Modules** – enables or disables modules.
- **Unload All Racks** – unloads all racks.

Home

Introduction

Home is used to move mechanical assemblies to a known "home" position and primes the system. This function can be used for the DxC, the UCTA, or both instruments simultaneously.

Why Use Home

Home is useful in the following situations:

- to attempt recovery from a motion error.
- to return the system or one component of the instrument from a *Stopped* state to *Standby.*

Home

IMPORTANT If the **STOP** button is pressed immediately after selecting **Home**:

- Wait at least 10 seconds.
- Press the **STOP** button again.

This makes sure that the system correctly reaches the *Stopped* state.

NOTE If one side of the DxC (MC or CC) is *Stopped* and the other side is running, the Home command operates on the side that is *Stopped.* The other side of the instrument continues to run.

1 Select **Instr Cmd** from the menu bar.

2 Select **1 Home**.

3 Select **1 DxC**, **2 UCTA**, or **3 Both**.

The instrument status(es) changes to *Homing*. If the home completes successfully, the instrument(s) will be in *Standby*. Should an error occur, the status will be *Stopped* and the appropriate error message appears.

Pause

Introduction

Pause provides a way to prevent new tests from being started on the DxC, or new aliquots from being made on the UCTA, without wasting sample or reagent as pressing STOP does. Those tests that already had reagent pipetted will run to completion, but no new tests will be scheduled. This feature can pause the MC side, the CC side or both the MC and CC sides of the DxC. The system will transition the paused side(s) of the instrument from *Running* to *Pausing* and eventually will reach *Standby*. To reach *Standby* status as soon as possible, cuvette washing stops as soon as the last result is available. Cuvettes may be left dirty.

IMPORTANT Do not request a *Pause* and leave the DxC sitting for a long period of time without washing the cuvettes. If cuvettes are left sitting with reactant, evaporation will occur, leaving encrustation on the sides of the cuvette that may require washing by hand.

Dirty cuvettes are washed automatically when the system status is *Running* or cuvettes can be washed when the Maintenance option **Wash All Cuvettes** is selected.

When to Use Pause

Use *Pause* when the DxC or the UCTA must be interrupted but there is not an immediate need to stop the samples in process. Correct uses of *Pause* include:

- When maintenance is needed but the system is already running.
- When a rack must be removed from the sample carousel but is not needed immediately.
- To avoid wasting reagent.

When NOT to Use Pause

Do not use Pause when there is danger involved or when the situation can be handled with another function.

Table 8.3 Alternatives Instead of Pause for Some Situations

Situation...	Instead of Pause...
Imminent danger to a person or the instrument.	Press the **STOP** button or turn off power.
Reagent needs to be loaded while the system is running.	Perform a reagent load as usual and the system automatically interrupts reagent additions to allow the reagent load to continue. Upon completion of the reagent load, the system will resume running samples.
Sample on the sample carousel is needed immediately.	From the Main screen select the rack with the sample needed and select **Unload F2**. Note that any tests that have been started for the samples in the rack that have not yet had sample added will be aborted. The rack, however, will be available within approximately 40 seconds.

Pause

1 Select **Instr Cmd** from the menu bar.

2 Select **2 Pause**.

3 Select the instruments or components you need to pause:

- **1 MC Only**,
- **2 CC Only**
- **3 Both MC and CC**
- **4 UCTA**

  OR
- **5 MC, CC, and UCTA**.

NOTE Press **RUN** to continue the run after a Pause.

Stop Print

Introduction

Stop Print will stop print requests that are still in the print queue and prevent them from being sent to the printer. This feature is useful in stopping print requests composed of many pages, such as the entire Event Log, some QC reports, or preventing multiple print requests.

How Stop Print Works

Print requests are stored in the printer queue in the console. As portions of these requests are ready to print, they are sent to the printer buffer and ultimately printed.

Stop Print deletes all of the print requests in the queue. Any portions of the print request already in the printer buffer, which could be several pages, will be printed.

Stop Print

1 Select **Instr Cmd** from the menu bar.

2 Select **3 Stop Print**.

Pause/Resume Waste B

Introduction

The Waste B option allows for some of the waste to be collected in an external bottle instead of going immediately down the drain. It is only necessary to use the Pause Waste B option if your system is configured with a Waste B collection bottle. Pause Waste B prevents the instrument from filling the collection bottle to allow for exchange of bottles. Resume Waste B is used to return to normal operation after Waste B removal was paused or to recover from certain flood conditions.

IMPORTANT If the Waste B option is paused and the Waste B exit sump is full, the system will not run until the Resume Waste B option is selected.

Pause Waste B

1. Select **Instr Cmd** from the menu bar.
2. Select **5 Pause Waste B**.

Waste B removal will be paused until Resume Waste B is selected. Pause Waste B will be gray, to indicate it is already paused.

Resume Waste B

1. Select **Instr Cmd** from the menu bar.
2. Select **6 Resume Waste B**.

The system will return to its normal operational state.

Enable/Disable Modules

Enable/Disable allows the user to Enable and Disable an individual subsystem module, the MC side, or the CC side. This function allows some subsystems to operate while others are disabled due to error conditions.

Additional Information

The user can manually enable or disable the following items:

- One or more individual MC modules (cups and ISE)
- All of the MC side

- Photometer
- LPIA Module
- All of the CC side
- Lower Reagent Carousel (1-30)

Notes:

- ❑ A module should be enabled or disabled only when the system is in *Standby* or is *Stopped*.
- ❑ All programming for Disabled modules is aborted. Modules or subsystems in the *Disable* mode will not run, prime, or perform desired maintenance/diagnostic procedures.

When the MC module is enabled, the related reagent is primed 4 times. When the CC subsystem is enabled, the system runs startup primes.

With an error, for example *Reagent too full*, the DxC automatically disables a module or subsystem. The Rgts/Cal status screen changes to *Disable* (refer to CHAPTER 6, *Supplies* for additional information).

IMPORTANT When an MC Module or CC subsystem is enabled, the calibration status will not be lost. Check the calibration status screen prior to running the system.

IMPORTANT When a module is Enabled, the system will go to *Standby* as it prepares for a prime. The system will not accept work requests at this time.

Disable Modules

1. Select **Instr Cmd** from the menu bar.
2. Select **7 Enable/Disable Modules**.
3. Select the desired module button to disable.
4. Select **OK** to Disable the desired modules.
5. Select **OK** to confirm Modules shown in the message box.

Enable Modules

IMPORTANT After enabling a chemistry or a module, run controls to verify proper operation.

If a reagent is loaded while the module is disabled, prime the module eight times after the module has been enabled.

Starting from a *Stopped* state, a module is not enabled until the system is homed and goes to *Standby*.

1. Select **Instr Cmd** from the menu bar.
2. Select **7 Enable/Disable Modules**.
3. Select the box of the desired module with a *Disabled* status to enable a module (remove blue indicator bar).
4. Select **OK** to enable the desired modules.
5. After Enable is requested, there is an eight-second delay before the system starts to prime.

   NOTE Do not press **RUN** during this eight-second delay. Samples will not be run (NOT ACCEPTED error) because the system is priming.

Unload All

Introduction

Unload All is used when the instrument is in *Standby*. It removes all the sample racks, from the sample carousel, to the offload track. It can be used:

- When access to a sample is required, or
- After a system error, if a rack is shown on the Main screen, but it is not physically on the carousel.

Unload All Racks

1. Select **Instr Cmd** from the menu bar.
2. Select **8 Unload All Racks**.
3. Select **1 DxC**, **2 UCTA**, or **3 Both**.

4 All racks on the sample carousel are removed. An empty sample carousel is shown on the Main screen.

NOTE You may need to review *Incomplete* samples and reload samples as necessary.

System Shutdown/Restart

Use the Shutdown procedure to place the system into a state where it is safe to restart or turn power off. The system closes files to prevent data corruption.

To shut down the Integrated Workstation, you must shut down all three modules (DxI, UCTA, DxC). Shut down the system only if instructed to do so by a Beckman Coulter Technical Support Representative or by the system documentation. Reboot is not recommended. To restore power, see Startup Procedure.

IMPORTANT When you perform a shutdown, read and follow the instructions on the screens.

Extended Shutdown

If you need to shut down the DxC analyzer for an extended period, contact your local Beckman Coulter Technical Support for assistance. To shut down the DxI analyzer for an extended period, see *Shutting Down the System for an Extended Period* in the DxI Online Help.

NOTE You can shut down the DxI and the DxC simultaneously at the respective consoles. You MUST shut down the DxI instrument before you shut down the DxI PC.

Shutdown Procedure

1 Shut Down the DxI.

2 Shut Down the UCTA.

3 Shut Down the DxC.

Shut Down the DxI

NOTE

- You need the Integrated Workstation password to use this feature. If you do not know the password, contact your lab supervisor.
- When you shut down the PC and the instrument at the same time, shut down the instrument first.
- Shutting down the instrument turns off the refrigeration in the reagent storage chamber and other areas.

The system may be in *Ready* or *Not Ready* mode.

This procedure is performed at the DxI console.

---

1 From the Main Menu, select **Configure F8**.

---

2 Select **PC Admin F7** to show the PC Admin screen.

---

3 From the PC Admin screen, select **System Admin F8** and then select **Shut Down Instrument F2** to show the Shut Down Instrument Software window.

---

4 Enter the system password, then select **OK F1**.

NOTE If there is no connection between the UI software and the DxI instrument, the system shows a message that the connection was lost. The system cancels the shutdown operation. If this occurs, contact Beckman Coulter Technical Support before you attempt to shut down the system with the power switch.

---

5 When the software shows a message to turn off the instrument power switch, select **OK F1** to exit the message window.

---

6 The instrument power switch is behind the lower right door as you face the DxI instrument. Open the door and locate the power switch.

---

7 Press the lower part of the switch to turn the power off (O position). The system mode area of the system software screen turns red, but no system mode is shown.

---

8 From the PC Admin screen, select **System Admin F8**. If the software does not respond, use the Shut Down the DxI PC with the Computer Keyboard procedure.

9 Select **Shut Down PC F1** to show the Shut Down window.

IMPORTANT Do not select the **Shut down the instrument software** box.

10 Select **Yes F1**.

11 To shut off the power to the PC, press and hold the power switch for at least 20 seconds. Verify that the green LED is off; if it is not, hold the power switch in longer.

If any messages appear, select **OK** to clear them.

Wait at least 20 seconds before restarting the PC and the instrument. For more information, see Restart the DxI.

Shut Down the DxI PC with the Computer Keyboard

If the UI software does not respond, use this procedure to shut down the PC with the computer keyboard.

NOTE Use the computer keyboard to shut down the PC only if you have no other alternative.

1 Simultaneously press the Ctrl, Alt, and Delete keys on the computer keyboard.

NOTE If the keyboard does not respond, shut down the PC by turning off the power. Press and hold the power switch for at least 10 seconds. Then wait at least 20 seconds before restarting the PC.

2 Select **Shut Down**.

3 Select **Shut Down**.

4 Select **OK**.

5 When the message appears, press and hold the power switch until the green LED light goes off.

Shut Down the UCTA

1 Press the UCTA power switch off (O position).

Shut Down the DxC

1 Verify that the system is in *Standby*, *Stopped,* or the *Instrument Down* state.

2 Select **Instr Cmd** from the menu bar.

3 Select **4 Shutdown**.

4 Select **OK**. The Shutdown in Progress screen appears with the message:
"Please wait for further instructions. DO NOT TURN THE POWER OFF."
The system status goes to *Shutdown*.

5 From the **Select Reboot or Shutdown** dialog box, select the appropriate option:

- Select **Shutdown** to prepare the system to have the power turned off. When the message, "*Shutdown Complete: It is now safe to reboot your computer*" appears on the screen:
  - Turn off the console power: press and hold the power button until the light goes out.
  - Turn the instrument main power switch (1) behind the far right door to the OFF (O) position. Refer to Figure 8.1.
- Select **Reboot** to return the system to an operational state. The system automatically reboots and returns to the **Main** screen.

Figure 8.1 DxC ON/OFF (O/|) Switch

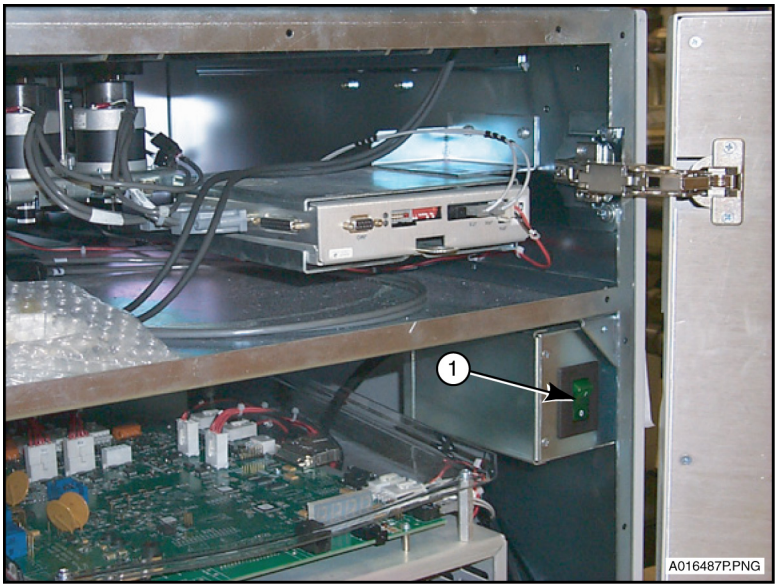

1. Main Power ON/OFF (O/|) Switch

Startup Procedure

The first software routine executed from a power-on or reset condition is the bootup. Boot software places the instrument into a functional state by performing system initialization, running boot diagnostics, and loading the operating system.

NOTE You can restart the DxI and and the DxC simultaneously, from the respective consoles.

1. Restart the DxI.
2. Restart the DxC.
3. Restart the UCTA.

Restart the DxI

IMPORTANT Do not select any buttons on the PC touchscreen or press any keys while the instrument restarts and initializes. After you start this procedure, the system pauses for approximately two minutes as it resets the software. Then the system enters the *Not Ready* mode and begins the system initialization process.

- During system initialization, the system homes mechanical devices and shows a flashing message in the system mode area. When most system devices complete initialization, the system enters the *Ready* mode.
- While in *Ready* mode, the system continues to initialize any remaining devices and shows a flashing message in the system mode area. When this message disappears, system initialization is complete.

1. Verify that the main upper covers of the DxI are closed.
2. Open the lower right door as you face the DxI and turn the power switch ON (| position). The system restarts and initializes. Immediately proceed to Step 3.
3. Restart the DxI PC. Press the power switch until the green LED light comes on.
4. Verify that the system is in the *Ready* mode and no message is shown in the system mode area. If the instrument does not initialize successfully, contact Beckman Coulter Technical Support.

5 Wait for the system to restore the internal temperatures. If the instrument was shut down for a short period of time, it will take 15-20 minutes for the system to restore the internal temperatures. Do not load samples on the instrument until all temperature zones are in range. To view the temperature zones, select **Maintenance Review F6** at the DxI console.

Restart the DxC

IMPORTANT When the system is in *Startup* status, you cannot perform any operation that requires interacting with the instrument.

If a temperature error occurs immediately after system boot-up, no action is required because the system temperature has not yet equilibrated. During temperature equilibration, which takes approximately 30 minutes, temperature errors should be ignored.

1 Turn the instrument main power switch behind the far right door to the ON (|) position. Refer to Figure 8.1.

2 If the monitor is off, turn it on.

3 Press the power button to turn on the console. If you have an external UPS, make sure that it is turned on.

4 If the printer is off, turn it on.

Restart the UCTA

1 When the DxI is in *Ready* mode and the DxC is in *Standby*, switch the UCTA power switch to ON (| position).

NOTE Clear any messages associated with the shutdown.

Utilities

The Utilities option provides the software tools to prime hardware subsystems and to prepare them for proper system readiness. Utilities can also be used to program the instrument for maintenance, to perform diagnostics and alignments, to view the Event Log, to back up and restore data, and to track reagent metering.

Prime

Introduction

The Prime feature of the Utilities menu permits the user to manually request a prime. From the main Prime screen, you can prime an entire subsystem, or an individual component (refer to the tables below). This feature is only available when the system status is in *Standby*.

Table 8.4 Prime for the CC Subsystems

CC Subsystems	Function
Reagent Delivery Subsystem	Washes the reagent probes and mixer, primes the reagent syringe.
Sample Delivery Subsystem	Washes the CC sample probe and mixer, primes the sample syringe.
Cuvette Wash Station	Primes cuvette wash Probes 1 and 2 with wash and Probe 3 with water.

Table 8.5 Prime for the Hydropneumatics Subsystem

Hydropneumatics Subsystem	Function
Fill canisters and reservoirs	Fills water, wash, and diluted wash.
CC Drain waste sump	Drains waste sump and exit sump.
CC Drain Waste B sump	Drains Waste B sump and exit sump.
Drain gravity drain sump	Drains the gravity sump.

Table 8.6 Prime for the Cups of the MC Subsystems

MC Subsystems	Function
Cups	
ALBm	Primes Albumin Reagent and/or water.
CREm	Primes Creatinine Reagent and/or water.
GLUCm	Primes Glucose Reagent and/or water.
PHOSm	Primes Phosphorus Reagent and/or water.
TPm	Primes Total Protein Reagent and/or water.
BUNm/UREAm	Primes BUN/UREA Reagent and/or water.

Table 8.7 Prime for Other Components of the MC Subsystems

MC Subsystems	Function
ISE Module (all)	Primes all reagents used by the ISE module.
Electrolyte Buffer	Primes Electrolyte Buffer Reagent.
Electrolyte Reference	Primes Electrolyte Reference Reagent.
EIC Wash	Primes DI water to the EIC.

Table 8.7 Prime for Other Components of the MC Subsystems *(Continued)*

MC Subsystems	Function
ISE CO_2 Alkaline Buffer	Primes the CO_2 electrodes with Alkaline Buffer Reagent.
Reference and Acid	Primes both Electrolyte Reference and CO_2 Acid Reagent.
Sample Delivery Subsystem	Washes the MC sample probe with wash, primes the sample syringe.

Table 8.8 Prime for UCTA Subsystems

Probe Wash: Right Probe	Washes the right aliquot probe.
Probe Wash: Left Probe	Washes the left aliquot probe.
Auto-Gloss: Right Blade	Primes the right piercer probe. One prime supplies the same quantity of lubricant as supplied with each cap pierce.
Auto-Gloss: Left Blade	Primes the left piercer probe. One prime supplies the same quantity of lubricant as supplied with each cap pierce.

Table 8.9 Prime for CTS Auto-Gloss and Blade Wash

CTS Auto-Gloss	Primes the blade wick. One prime supplies the same quantity of lubricant as supplied with each cap pierce.
CTS Blade Wash	Washes the CTS blade.

Priming All Subsystems

If the entire group of subsystems, such as all Cartridge Chemistry (CC) subsystems, needs to be primed, it is easiest to simply select the group of subsystems for prime instead of having to select each individual subsystem. Follow the steps below to prime a group of subsystems.

1 Select **Utils** from the menu bar.

2 Select **1 Prime**.

3 Select one or a combination of the following check boxes:

- **All CC Subsystems**
- **All Hydropneumatic Subsystems**
- **All MC Subsystems**
- **Prime DxC**
- **All UCTA Wash**
- **All UCTA Auto-Gloss**
- **CTS Auto-Gloss**
- **CTS Blade Wash**

4 Type the desired number of primes (1-99) in the **Number of primes to repeat** field. This does not apply for Hydro primes.

5 Select **Start Prime**. The system status changes to *Priming*.

6 Upon completion of the requested prime, the number of primes remaining will be blank and the system status returns to *Standby*.

Priming CC Subsystems

The CC Subsystem option allows independent priming of CC Reagent Delivery Subsystem, CC Sample Delivery Subsystem and Cuvette Wash.

⚠ CAUTION

If any two of the CC Subsystem items are selected, all three will prime automatically. Check to make certain that all three areas are ready to be primed if any two are selected.

1 Select:

- **Utils** from the menu bar,
- **1 Prime**,
- **CC F2**.

2 Select one or a combination of the following check boxes:

- **Reagent Delivery Subsystem**
- **Sample Delivery Subsystem**
- **Cuvette Wash**.

3 Type the desired number of primes (1-99) in the **Number of primes to repeat** field.

4 Select **Start Prime**. The system status changes to *Priming* and the number of primes remaining are shown.

5 Upon completion of the requested prime, the number of primes remaining will be blank and the system status returns to *Standby*.

Priming Hydropneumatic Subsystems

The Hydropneumatics Subsystem allows independent priming of each of its components. Follow the steps below to prime any combination of the components.

1 Select:

- **Utils** from the menu bar,
- **1 Prime**,
- **Hydro F3**.

2 Select any or all of the hydropneumatic subsystems.

- **FIll canisters and reservoirs**
- **CC Drain waste sump**
- **CC Drain Waste B sump**
- **Drain gravity drain sump**.

3 Select **Start Prime**. Although the instrument status remains in *Standby*, the hydro prime will begin.

Priming MC Subsystems

MC Subsystem Prime allows the priming of the cup modules, the ISE flow cell and EIC, and the Sample Delivery Subsystem.

- If a cup selection is made and neither reagent or DI water is specified, only DI water will be primed into the cup.
- If both reagent and DI water are selected, both will be primed and the cup(s) will be left full of DI water.
- Whenever Acid is primed, Reference must also be primed to prevent acid shocking the electrodes. Therefore there is no Acid-only option.
- Only one ISE selection can be made at a time. However the **ISE All** option can be used to select the entire list.

1 Select:

- **Utils** from the menu bar,
- **1 Prime**,
- **MC F4**.

2 Select the desired cup(s) and specify Reagent and/or DI water.

- **ALBm** (DxC 800 only)
- **CREm** (DxC 800 only)
- **GLUCm**
- **PHOSm** (DxC 800 only)
- **TPm** (DxC 800 only)
- **BUNm/UREAm** (DxC 800 only)

AND/OR

Select a single ISE option by choosing a check box.

- **ISE All**
- **Electrolyte Buffer**
- **Electrolyte Reference**
- **EIC Wash**
- **ISE CO2 Alkaline Buffer**
- **Reference and Acid**

AND/OR

Select the **Sample Delivery Subsystem** check box.

3 Type the desired number of primes (1-99) in the **Number of primes to repeat** field.

4 Select **Start Prime**. The system status changes to *Priming* and the number of primes remaining appears.

5 Upon completion of the requested prime, the number of primes remaining will be blank and the system status returns to *Standby*.

Priming UCTA Subsystems

The UCTA Subsystem allows independent priming of each of its components. Follow the steps below to prime any combination of the components.

1 Select:

- **Utils** from the menu bar,
- **1 Prime**,
- **UCTA F5**.

2 Select any or all of the UCTA subsystems.

Probe Wash:

- **Right Probe**
- **Left Probe**

AND/OR

Auto-Gloss:

- **Right Blade**
- **Left Blade**

3 Type the desired number of primes (1-99) in the **Number of primes to repeat** field.

4 Select **Start Prime**. Although the instrument status remains in *Standby*, the prime will begin.

Stopping a Prime

When a Prime has started, you can stop the Prime before the selected number of replicates has completed.

From any of the prime screens, select **Stop Prime**.

The replicate that is currently processing will complete and any remaining primes will be canceled.

Maintenance

Maintenance is routine instrument cleaning and replacement of parts as they become worn. Proper maintenance is essential for optimal instrument performance.

Additional Information

Refer to the CHAPTER 12, *Maintenance* in this manual for maintenance instructions.

Event Log

The Event Log is a record of events and errors that are logged (for example, CAU: DI Water Canister Level Low. Message ID 0x01FA000E.) This logged information can be used as a troubleshooting tool if a problem is encountered while operating the instrument.

The entire Event Log can be viewed, printed, or copied to disk. It is possible to select only a portion of the Event Log to work with by specifying classes and/or a date and time range.

Event Log Classes

Table 8.10 Event Log Classes

Class Number	Event Log	# of entries
1	Chemistry Errors	10,000
2	Motion Errors	10,000
3	Status Monitor Errors	10,000
4	Other Instrument Errors	10,000
5	Instrument Events	120,000
6	LIS Comm. Errors	180,000
7	Other Console Errors	10,000
8	Input Device Events	15,000
9	Other Console Events	10,000
10	Sample Processing Events	60,000
11	Deleted Results	10,000
12	DxI Communications	20,000
13	UCTA Events	40,000

Event Information

Table 8.11 Information in the Event Log

Event information	Definition
Num	Sequential number identifying the "order", with number one representing the most recent entry.
Class	Number corresponding to the 1-13 event classes listed on the Event Log main screen (for example, Instrument Events).
Date	The Month, Day, and Year the event occurred.
Time	The time the event occurred in Hours, Minutes, and Seconds.
Description	Identifies the event or error that occurred.

Select Specific Event Classes

1 Select:

- **Utils** from the menu bar,
- **3 Event Log**.

2 Select the desired Classes. If no Classes are specified, all classes in the Event Log will be retrieved.

3 Select **Display** to view the desired event.

Information Options

After you select the Event Classes, you can format the information using the following options.

Table 8.12 Event Classes Information Options

Option	Description
Display	Display Events - for reviewing events on the screen.
Copy	Copy to External Media - for saving events to external media (USB or diskette) as a permanent record, for viewing on another system or sending to Beckman Coulter. **NOTE** Events cannot be saved to CD. Diskettes must be MS-DOS formatted.
Time	Date and Time selection - for selecting events for a specified date and time period.
Clear	Clear Events - for removing unwanted event information. To clear information, select the event class(es) to be deleted and select the clear confirmation window. **NOTE** If you chose to clear events, your system may be inaccessible for up to an hour.
Print	For creating a paper copy. **NOTE** To save paper, before selecting **Print**, verify that only the desired event classes for the appropriate time period are selected.
Done	To exit.

Show Events

1 Select the Event Log classes and a date/time range, if desired. (See Specify the Date/Time.)

2 Select **Display** from the Event Log dialog box.

3 To transfer information to external media, select **Copy to Media** from the Display Events dialog box and follow the instructions under Copy to Media.

4 To print the information, select **Print**. This will print the entire selection, not just the page currently shown.

5 When finished viewing the information, select **Close**.

Additional Information

For additional information about corrective action for non-recoverable errors found in the Event Log, refer to the CHAPTER 13, *Troubleshooting Calibration and Result Errors* in this manual.

Copy to Media

Follow the steps below to copy the Events to external media (USB or diskette). Copy will create a new file called *elog1*. The file can then be opened using a word processing or spreadsheet program or can be sent to Beckman Coulter for further investigation.

When you export information from the DxC console to a USB device, you must transfer the information to a different PC.

When you download information to USB, the DxC system uses the same file names each time it downloads data. It will overwrite existing files on a USB device. To prevent overwriting the files on the storage PC, create a directory structure such as:

- DxC Event Log-Instrument Name
  - Date 1
  - Date 2
  - Date 3

Store the identically-named files under the individual dates.

---

1 From the Event Log dialog box, select the event log classes and a date/time range if desired. (See Specify the Date/Time.)

---

2 Select **Copy** from the Event Log dialog box.

OR

Select **Copy to Media** from the Display Events dialog box.

---

3 Insert the external media into the appropriate drive.

---

4 Select **OK** to transfer information.

---

5 While the transfer is occurring the message, "*Copying to External Media Please Wait...*" appears.

NOTE If damaged or write-protected media is accidentally used to copy Event Log information, the message "*Copying to External Media Please Wait...*" appears continuously. To exit from this condition, select **Cancel**.

6 Upon completion, "*Copy Done*" briefly appears before the screen returns to the Event Log dialog box.

If you are using a USB, see the information above for instructions on transferring the information.

Specify the Date/Time

It is possible to select a date and time range to show only data from that time period. This specification can be used alone to view all events for the specified date and time range or can be combined with Class selections to view only those events which occurred for selected classes during the specified date and time range.

When selecting a date and time the following rules apply:

- if a **From** date is entered but no **End** date, only data for that date is retrieved.
- if a **To** date is specified, a **From** date is required.
- if hours are entered, but no minutes, 00 minutes is used.

After selecting the desired Event Classes, follow the steps below to specify the desired date and time period.

1 Select **Time** from the Event Log dialog box.

2 Type desired time period. Press (Tab) to advance the cursor to each field.

3 Select **OK** to accept the time period.

4 Select **Display** to view selected information. When finished viewing the information, select **Close**.

Clear Events

The Clear option is used to remove unwanted event information. It removes all events in the selected classes even if a date/time range has been entered. If no classes are specified, the entire Event Log is cleared.

NOTE The use of this feature is discouraged since Clear deletes important system information that can be used for trending analysis. If you chose to clear events, your system may be inaccessible for up to an hour.

1. Select the desired Event Log classes.
2. Select **Clear** from the Event Log dialog box. (See Specify the Date/Time.)
3. Verify events to be cleared.
4. Select **OK** to remove specified events.

Print an Event Log

The Print option will send the data in the currently selected classes and date/time range to the printer. If no selections are made, the entire Event Log will be printed.

Print is available from both the Event Log dialog box without having to view the data first, or can be selected from the Display Events dialog box. Print always sends the complete selection to the printer. If a print of the current page/screen is required, press (PrtScn) from the keyboard.

IMPORTANT Use the Print function carefully when in the Event Log. Because there is a maximum of 100,000 events, printing the entire Event Log will take several minutes and many pages of paper to complete the report.

1. Select the desired Event Log classes and a date/time range if desired. (See Specify the Date/Time.)
2. Select **Print** from the Event Log dialog box.

   OR

   Select **Print** from the Display Events dialog box.

   To stop the printer,
   - Select **Instr Cmd** from the menu bar,
   - Select **3 Stop Print**.

Alignment/Diagnostics/PVTs

Diagnostics and Alignment

- Diagnostics are tests used to confirm or isolate instrument problems.
- Alignment allows for adjustment of the various mechanical components.
- PVTs are Performance Verification Tests used to assess instrument performance.

Additional Information

Refer to the UniCel DxC Synchron Clinical Systems *Reference Manual* to access diagnostic testing procedures and alignment instructions.

Metering

Reagent Metering

Reagent Metering provides reagent dispense counting and replenishment adjustments for those instruments that are on a cost-per-test contract. Metering is only initialized on those instruments with a cost-per-test contract.

Metered-Use Instruction Manual

Refer to the Synchron Clinical Systems *Metered-Use Manual* for instructions on usage.

Modem

The modem attached to the system provides the ability to electronically retrieve instrument data and transmit it to Beckman Coulter.

Currently, there is no configuration required for the modem. Therefore, this option is grayed out. The modem is automatically initialized upon instrument restart.

Backup/Restore

Introduction

The Backup/Restore option provides the ability to store data to external media (USB or diskette) for use at a later time, should an error occur that causes the loss of data. Backup is the process of saving data to external media for safe storage. Restore takes previously backed up data and places it back into the system. The information is divided into two categories: System Parameters and Alignment Data. If you are using diskettes, each category must be stored on separate diskettes.

NOTE Backup information cannot be saved to a CD.

When you export information from the DxC console to a USB device, you must transfer the information to a different PC. To restore the backup files, you must copy the appropriate information from the storage PC and transfer it back to the DxC console.

When you download information to USB, the DxC system uses the same file names (**ALIGN_archaa**, **ALIGN_toc**, **SYSPARAM_archaa**, and **SYSPARAM_toc**) each time it downloads data. It will overwrite existing backup files on a USB device. To prevent overwriting the files on the storage PC, create a directory structure, for example:

- DxC Backup Data-Instrument Name
  - SW Version 1

— SW Version 2
— SW Version 3

Store the identically-named files under the individual dates.

System Parameters

System Parameters contains setup, e-maintenance log, reagent, and calibration information.

Alignment Data

Alignment Data includes all alignment information including photometer data.

IMPORTANT Beckman Coulter recommends that you backup data after every alignment procedure.

Back Up the System

The backup procedure should be performed following installation of a new software version, a change in alignments or a change in system parameters, especially setup parameters. To perform a backup, follow the steps below.

NOTE If the information is stored on diskettes, alignment files are on a separate diskette from System Parameters. Depending on the instrument configuration, System Parameters may require more than one diskette.

IMPORTANT If you are using a USB, erase the information on the USB **before** using it for system backup.

IMPORTANT Do not start a backup of System Parameters or Alignments while the printer is printing. If the printer is printing, it will correctly stop before backup but will not restart when the backup is completed. You must restart the system to return to normal operation.

---

1 Select:

- **Utils** from the menu bar,
- **8 Backup/Restore**.

---

2 Select the **System Parameters** box.

AND/OR

Select the **Alignment Data Files** box.

---

3 Select **Backup**. The system displays a warning message indicating that all Host communication, and Print functions will be disabled.

---

4 Select **OK**. A slight delay occurs as the system prepares for the backup.

5 When prompted, insert external media into the appropriate drive. If you selected both System Parameters and Alignment Data Files, the system copies Alignment information first.

⚠ CAUTION

Selecting OK will prepare a diskette by ERASING it before copying data.

IMPORTANT **If you are using a USB to perform both Alignment and System Parameters data backup, DO NOT erase the USB between the two backup procedures.**

6 Select **OK to create the backup files**.

7 When the backup is complete, the system displays a confirmation message. Select **OK**.

8 Remove the media.

- If you are using a diskette, label it with the following information:
  - date of backup
  - type of backup - System Parameters and/or Alignment Data
  - current software and chemistry database version
  - instrument serial number
- If you selected both System Parameters and Alignment Data, the system completes the Alignment Data diskette first.
  - Store the diskettes in a safe place.
- If you selected both System Parameters and Alignment Data, repeat Steps 5-8 for the System Parameters.

If you are using another form of external media, see Introduction for instructions on transferring the information.

Restore the System

System Parameter and Alignment data can be restored from external media onto the system.

⚠ CAUTION

Restoring System Parameters deletes all sample programming and results from the hard drive. This includes QC, reagents onboard, and the calibration status.

NOTE If the software version on the backup is different from the current software version, the Restore function for System Parameters cannot be performed.

Restore the System at the Integrated Workstation Console

1 Select:

- **Utils** from the menu bar,
- **8 Backup/Restore.**

2 Select the **System Parameters** box.

AND/OR

Select the **Alignment Data Files** box.

3 Select **Restore.**

4 Insert the backup media into the appropiate drive. If you are using diskettes, and you selected both System Parameters and Alignment Data Files, insert the Alignment diskette first.

5 Select **OK.** The system displays the date the backup was performed, type of backup, instrument serial number, database version, and chemistry database version.

6 Select **OK.** The system prompts you to confirm you want to restore the database. Note that the restore operation deletes the entire database.

7 Select **OK.** The restore will begin.

8 Upon completion of the Restore, a window appears prompting for the external media to be removed. Remove the external media and select **OK.** The system automatically restarts.

⚠ CAUTION

If you are renewing a DxC database (either by re-installing the software, installing a new console, or restoring the database from a backup) on an Integrated Workstation, you must also clear the results database on the DxI.

Clear DxI Results Database

Perform this procedure at the DxI console.

NOTE You need the system password to perform this function. If you do not know the password, contact your lab supervisor.

1 Select **Configure F8** from the DxI Main Menu, then select **PC Admin F7.**

2 Select **Auto-Delete Setup F5**.

3 Type the system password, then select **OK F1**.

4 Print the screen to use as a reference to recreate the current settings after you have cleared the results database.

5 In the Auto-Delete Setup window, select the check boxes for **Patient samples** and **QC samples**.

6 To delete stored information, type **1** in the **days** field for **Patient samples**, and **30** in the **days** field for **QC samples**.

7 Select **OK F1**. The system displays a confirmation window.

8 Select **Yes F1** to close the confirmation window.

9 Select the Event Log button. When all qualified samples have been deleted, the system displays an event log message.

10 Select **Menu** on the right side of the screen, then select **Configure F8**, PC Admin F7, and **Auto-Delete Setup F5** to display the Auto-Delete Setup window.

11 Use the printed screen from Step 4 to recreate the original settings.

12 Select **OK F1**. The system displays a confirmation window.

13 Select **Yes F1** to close the confirmation window.

Touch Screen Calibration

Use this function to calibrate the Integrated Workstation touch screen monitor. Select **Utils** from the menu bar, then select**10 Touch Screen Calibration** and follow the instructions on the screen.

CHAPTER 9

Independent Mode

Introduction

The Integrated Workstation is designed so that individual components can continue to operate when one component is down. This chapter describes how to operate different configurations of components when the full system cannot be run.

Independent Operating Modes

UCTA is Non-operational

NOTE When you process samples on the DxC and DxI directly:

- Refer to the appropriate sample container information for each system (See Table 9.1, Preparation of DxC Sample Containers, or Table 9.2, Preparation of DxI Sample Containers, and Table 4.2, Preparation of Sample Containers.)
- Use appropriately defined racks for loading samples onto the DxI SPU and the DxC Load Area.
- Refer to the appropriate Sample Templates for volume requirements.

NOTE If the UCTA becomes non-operational during sample processing:

- Remove samples from the UCTA load tray.
- Allow samples being processed by the DxI and DxC to go to completion.
- If the UCTA is running, select:
  - **Instrument Commands**
  - **Pause**
  - **UCTA**

  If the UCTA returns to *Standby*, unload racks from the UCTA sample carousel. (See Unload All Racks.)

  If the UCTA goes to *Stopped*, select:
  - **Home**
  - **UCTA**

When the UCTA returns to *Standby*, unload racks from the UCTA sample carousel. (See Unload All Racks.)

- If you cannot unload the racks, contact Beckman Coulter Technical Support for assistance.

1 Press the UCTA **Stop** button.

2 When the DxC and DxI system statuses are *Standby*, print a Load List from the workstation console or the Host (LIS) for incomplete samples.

3 Remove the DxC load area cover. Refer to Figure 9.1. Loosen the captive screws (1) and remove the cover.

Figure 9.1 DxC Sample Loading Area and Run Button covers

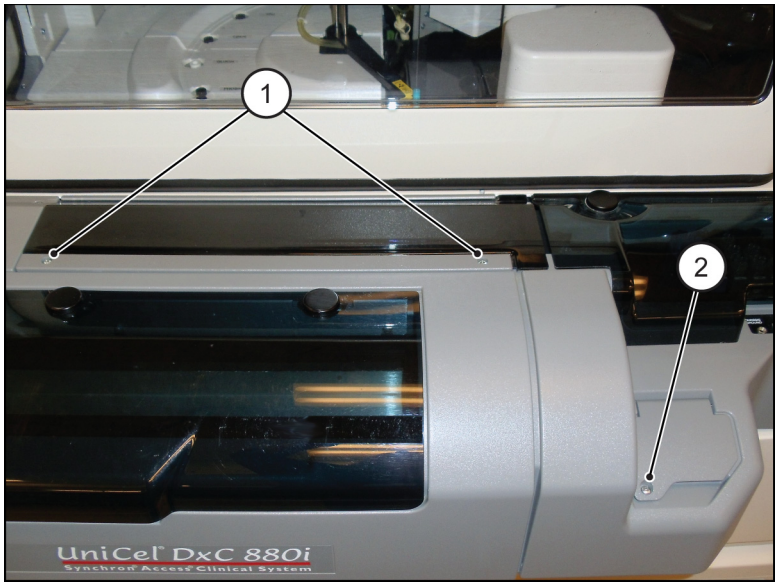

1. Load area cover screws
2. Run button cover screw

4 Uncover the DxC **Run** button. Refer to Figure 9.1. Loosen the captive screw (2) on the **Run** button cover and lift the cover.

5 To process samples:

- Load samples that require both DxC chemistries and DxI assays onto the DxI SPU before you run them on the DxC.
- For samples with bar codes:
  - **DxI:** Place them in appropriate DxI racks and load them onto the DxI SPU.

⚠ CAUTION

You must remove caps from sample tubes before loading them onto the DxI SPU. A capped tube can damage the DxI.

— **DxC:** Place them in appropriate DxC racks and load them onto the DxC load area. Press the DxC **Run** button.

- For samples with no bar codes or with unreadable bar codes, program samples manually at the workstation console, then:

  — **DxI:** Place them in appropriate DxI racks and load them onto the DxI SPU.

⚠ CAUTION

You must remove caps from sample tubes before loading them onto the DxI SPU. A capped tube can damage the DxI.

— **DxC:** Place them in appropriate DxC racks and load them onto the DxC load area. Press the DxC **Run** button.

6 When the UCTA is operational, replace the DxC load area cover.

7 Cover the DxC **Run** button.

8 Shut down and restart the Integrated Workstation. See System Shutdown/Restart.

9 When all Integrated Workstation system statuses are *Standby* (DxI/UCTA/DxC), load samples onto the UCTA load tray.

DxI is Non-operational

NOTE When you process samples on the DxC directly:

- Refer to the appropriate sample container information for the DxC only. (See Table 9.1, Preparation of DxC Sample Containers, and Table 4.2, Preparation of Sample Containers.)
- Use appropriately defined racks for loading samples onto the DxC load area.
- Refer to the appropriate Sample Templates for volume requirements.

NOTE If the DxI becomes non-operational during sample processing:

- Remove samples from the UCTA load tray.
- Allow samples being processed to go to completion.
- If the UCTA is running, select:
  - **Instrument Commands**
  - **Pause**
  - **UCTA**

  If the UCTA returns to *Standby*, unload racks from the UCTA sample carousel. (See Unload All Racks.)

  If the UCTA goes to *Stopped*, select:
  - **Home**
  - **UCTA**

  When the UCTA returns to *Standby*, unload racks from the UCTA sample carousel. (See Unload All Racks.)
- If you cannot unload the racks, contact Beckman Coulter Technical Support.

---

1 When the UCTA and the DxC system statuses are *Standby*, print a Load List from the workstation console or the Host (LIS) for incomplete samples.

---

2 Disable DxI Priority (if enabled). At the workstation console, select:

- **Setup**
- **30 DxI Priority/Reflex Test Setup**
- Deselect the **DxI Priority** check box.

---

3 To process samples:

- Press the UCTA **Stop** button.
- Remove the DxC load area cover. Refer to Figure 9.1. Loosen the captive screws (1) and remove the cover.
- Uncover the DxC **Run** button. Refer to Figure 9.1. Loosen the captive screw (2) on the **Run** button cover and lift the cover.
- For samples that require both DxC chemistries and DxI assays:
  - Run the samples on an alternative immunoassay analyzer before you run them on the DxC, OR

— Pipette an aliquot to run when the DxI is operational. Store the aliquot properly based on sample requirement.

- Place samples with bar codes in appropriate racks and load them onto the DxC load tray. Press the DxC **Run** button.
- For samples with no bar codes or with unreadable bar codes, program samples manually at the workstation console, then place them in appropriate racks and load them onto the DxC load tray. Press the DxC **Run** button.

4 When the DxI issue is resolved and the UCTA and DxC system statuses are *Standby or Stopped*, enable DxI Priority (optional). At the workstation console, select:

- **Setup**
- **30 DxI Priority/Reflex Test Setup**
- Select the **DxI Priority** check box.

5 Shut down and restart the Integrated Workstation. See System Shutdown/Restart.

6 When all Integrated Workstation system statuses are *Standby* (DxI/UCTA/DxC), load samples onto the UCTA load tray.

DxC is Non-operational (Chemistry Analytical Unit & Console)

NOTE When you process samples on the DxI directly:

- Refer to the appropriate sample container information for the DxI only. (See Table 9.2, Preparation of DxI Sample Containers and Table 4.2, Preparation of Sample Containers.)
- Use appropriately defined racks for loading samples onto the DxI SPU.

NOTE If the DxC becomes non-operational during sample processing:

- Remove samples from the UCTA load tray.
- Allow samples being processed to go to completion.
- When the UCTA goes to *Standby*, remove the DxC load area cover (see Figure 9.1, 1) and remove any racks found in the DxC load area. Replace the DxC load area cover.
- If you cannot remove the racks, contact Beckman Coulter Technical Support.

⚠ CAUTION

You must remove caps from sample tubes before loading them onto the DxI SPU. A capped tube can damage the DxI.

1 When the DxI system status (at the DxI console) is *Ready*, print a Load List from the Host (LIS) for incomplete samples.

2 Enable DxI Report (if disabled). At the DxI console Main Menu, select:

- **Configure F8**
- **System Setup F1**
- **Reports Setup F7**
- Select the **Continuous Sample Report** check box.

3 Program samples manually at the DxI console.

4 Place samples in appropriate DxI racks and load them onto the DxI SPU.

- Load samples that require both DxC chemistries and DxI assays onto the DxI SPU before you run them on an alternative chemistry analyzer.

⚠ CAUTION

You must remove caps from sample tubes before loading them onto the DxI SPU. A capped tube can damage the DxI.

5 When the DxC issue is resolved and the DxI system status (at the DxI console) is *Ready*, disable DxI Report (optional). At the DxI console Main Menu, select:

- **Configure F8**
- **System Setup F1**
- **Reports Setup F7**
- Deselect the **Continuous Sample Report** check box.

6 Shut down and restart the Integrated Workstation. See System Shutdown/Restart.

7 When all Integrated Workstation system statuses are *Standby* (DxI/UCTA/DxC), load samples onto the UCTA load tray.

DxC is Non-operational (Chemistry Analytical Unit Only)

NOTE When you process samples on the DxI directly:

- Refer to the appropriate sample container information for the DxI only. (See the Table 9.2, Preparation of DxI Sample Containers and Table 4.2, Preparation of Sample Containers.)
- Use appropriately defined racks for loading samples onto the DxI SPU.
- Refer the appropriate Sample Templates for volume requirements.

NOTE If the DxC becomes non-operational during sample processing:

- Remove samples from the UCTA load tray.
- Allow samples being processed to go to completion.
- If the UCTA is running, select:
  - **Instrument Commands**
  - **Pause**
  - **UCTA**

  If the UCTA returns to *Standby*, unload racks from the UCTA sample carousel. (See Unload All Racks.)

  If the UCTA goes to *Stopped*, select:
  - **Home**
  - **UCTA**

  When the UCTA returns to *Standby*, unload racks from the UCTA sample carousel. (See Unload All Racks.)
- If you cannot unload the racks, contact Beckman Coulter Technical Support.
- When the UCTA goes to *Standby*, remove the DxC load area cover (see Figure 9.1, 1) and remove any racks found in the DxC load area. Replace the DxC load area cover.

⚠ CAUTION

You must remove caps from sample tubes before loading them onto the DxI SPU. A capped tube can damage the DxI.

---

1 When the DxI and UCTA system statuses are *Standby*, print a Load List from the workstation console or the Host (LIS) for incomplete samples.

---

2 To process samples:

- Place samples with bar codes in appropriate DxI racks and load them onto the DxI SPU.

- For samples with no bar codes or with unreadable bar codes, program samples manually at the workstation console, then place them in appropriate DxI racks and load them onto the DxI SPU.

⚠ CAUTION

You must remove caps from sample tubes before loading them onto the DxI SPU. A capped tube can damage the DxI.

3 When the DxC issue is resolved and the DxI system status is *Standby/Ready*, and the UCTA system status is *Standby* or *Stopped*, shut down and restart the Integrated Workstation. See System Shutdown/Restart.

4 When the all Integrated Workstation system statuses are *Standby* (DxI/UCTA/DxC), load samples onto the UCTA load tray.

DxC Sample Handling System

DxC Load Area/Offload Track

When viewed from the front of the system, the load area is on the left and holds up to 25 sample racks in preparation for presentation to the DxC system.

There is also space for 25 sample racks in the offload track as they are removed from the Sample Carousel upon completion.

IMPORTANT When loading racks onto the load area, make sure that they are placed firmly down into the load area.

Figure 9.2 DxC Sample Loading Area

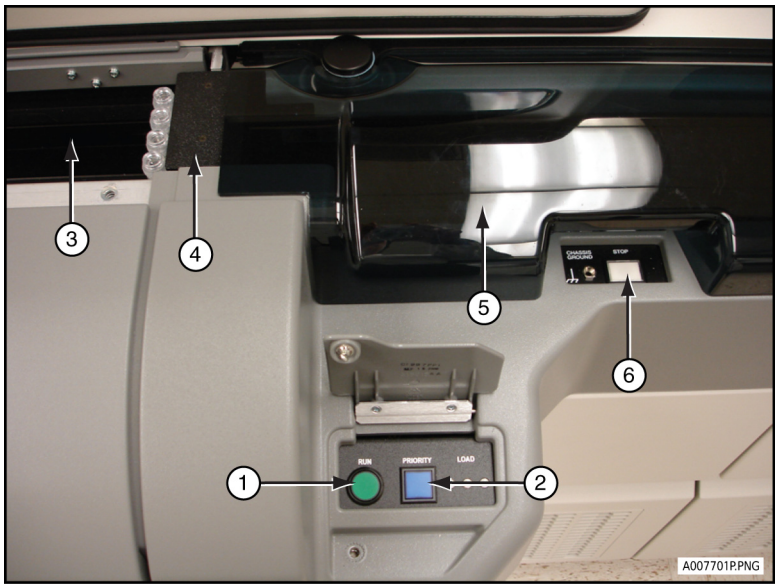

1. DxC Run Button (cover lifted)
2. Priority Load Button
3. DxC Load Area Cover
   (DxC Load Area below cover)
4. Sample Gate
5. Offload Track
6. Stop Button

Priority Load Position

Between the Load Area and the Sample Gate is the Priority Load position. This position is used in conjunction with the PRIORITY LOAD button when a rack is to be loaded onto the Sample Carousel into a *reserved priority position* so that it can be run in a higher priority than other racks on the Load Area. Refer to Figure 9.2.

Priority Load Button

Typically, rack placement and removal is under microprocessor control. The operator may use the reserved positions in the sample carousel by pressing the PRIORITY LOAD button and placing the priority rack in the space provided by the system. The rack loads into one of the reserved positions on the Sample Carousel.

PRIORITY LOAD only prioritizes the loading of the rack. It does not alter the sample priority (STAT or routine) previously designated in Sample Programming.

Pushers

Pushers collect and move to the Sample Gate any racks loaded onto the system. They are activated when the RUN button is pressed. Refer to Figure 9.2.

Sample Gate

The Sample Gate is the mechanism that moves racks from the load tray to the shuttle during the load process. It also moves samples from the shuttle to the offload track during the unload process.

Sample Preparation by Container Type

Table 9.1 shows how to prepare different sample containers that can be used in the DxC independently.

Table 9.2 shows how to prepare different sample containers that can be used in the DxI independently.

Shared containers that can be used through the UCTA and in the DxC and DxI independently are listed in Table 4.2, CHAPTER 4, *Sample Programming and Processing*.

NOTE Containers must be placed in properly defined racks. Racks are defined in System Setup, through the Reserved Racks function. Refer to the UniCel DxC Synchron Clinical Systems *Reference Manual* for this procedure.

NOTE The dead volume is defined as the minimum amount of sample that must be present to prevent level sensing and probe motion errors. This volume is not used for testing.

Table 9.1 Preparation of DxC Sample Containers

If running a sample from a...	Then...
Primary Tube 16 x 75 mm open tube	• Use the UniCel DxC *Sample Template* to determine adequate sample volume. • Place into a 16 x 75 mm rack. • Remove the cap.
Primary Tube 13 x 65 mm Sarstedt S-Monovette	• Use the UniCel DxC *Sample Template* to determine adequate sample volume. • Place into a 13 x 75 mm rack. • Remove the cap.
Primary Tube 13 x 90 mm Sarstedt S-Monovette	• Use the UniCel DxC *Sample Template* to determine adequate sample volume. • Place into a 13 x 100 mm rack. • Remove the cap.
Synchron Microtube 5 mL	• Place into a 13 x 100 mm rack. • 60 µL dead volume.
0.5 mL Sample Cup (PN 651412) in 16 x 100 mm Tube	• Place into a 16 x 100 mm rack. • Make sure there are no bubbles in the sample cup. • 50 µL dead volume.
0.5 mL Sample Cup (PN 651412) in 5 mL Transfer Tube (PN 979272)	• Make sure there are no bubbles in the sample cup. • 50 µL dead volume.
0.5 mL Sample Cup (PN 651412) in 0.5 mL Cup Insert (PN 476406) (reusable) 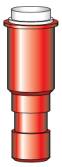 A011538L.PNG	• Place the Cup Insert into a 16 x 100 mm rack. • Make sure there are no bubbles in the sample cup. • 20 µL dead volume.
2.0 mL Insert Cup (PN 81917) in 16 x 100 mm Tube	• Place into a 16 x 100 mm rack. • Make sure there are no bubbles in the sample cup. • 150 µL dead volume.
2.0 mL Sample Cup (PN 652730 or PN 81902) in 16 x 100 mm Tube	• Place into a 16 x 100 mm rack. • Make sure there are no bubbles in the sample cup. • 150 µL dead volume.
2.0 mL Sample Cup (PN 652730 or PN 81902) in 5 mL Transfer Tube (PN 979272)	• Make sure there are no bubbles in the sample cup. • 150 µL dead volume.
1.0 mL Insert Cup (PN 81915) in 12 or 13 x 75 mm Tube	• Make sure there are no bubbles in the insert cup. • 250 µL dead volume.
1.0 mL Insert Cup (PN 81915) in 13 x 100 mm Tube	• Make sure there are no bubbles in the insert cup. • 250 µL dead volume.
1.0 mL Pediatric Insert Cup (PN 81916) in 12 or 13 x 75 mm Tube	• Make sure there are no bubbles in the insert cup. • 50 µL dead volume.
1.0 mL Pediatric Insert Cup (PN 81916) in 13 x 100 mm Tube	• Make sure there are no bubbles in the insert cup. • 50 µL dead volume.

Table 9.1 Preparation of DxC Sample Containers *(Continued)*

If running a sample from a...	Then...
Becton Dickinson Microtainer Tube[a] (BDPN 365958) 2 mL with adapter (PN 472987) open tube	• Use the UniCel DxC *Sample Template* to determine adequate sample volume. • Place into a 100 mm rack.
Terumo Capiject[b] with adapter (PN 472987) open tube	• Use the UniCel DxC *Sample Template* to determine adequate sample volume. • Place into a 100 mm rack.
10.25 x 47 mm Becton Dickinson Vacutainer Tube with adapter (PN 472987) open tube	• Place into a 13 x 100 mm rack. • Use the 10.25 x 65 mm tube on the UniCel DxC *Sample Template* to determine adequate sample volume.
10 x 64 mm Becton Dickinson Vacutainer Tube open tube	• Use the UniCel DxC *Sample Template* to determine adequate sample volume. • Place into a 13 x 75 mm rack.
10 x 65 mm (3 mL tube) Terumo Veniject Tube open tube	• Use the 10 x 65 mm tube on the UniCel DxC *Sample Template* to determine adequate sample volume. • Place into a 13 x 75 mm rack.
2.0 mL Insert Cup (PN 81917) in 15 x 85 mm Tube	• Place into a 16 x 100 mm rack. • Make sure there are no bubbles in the insert cup. • 150 µL dead volume.
12 or 13 x 75 mm pour off Tube	• Place into a 13 x 75 mm rack. • 460 µL dead volume.

a. Registered trademark of the Becton Dickinson Corporation.
b. Registered trademark of the Terumo Corporation.

Table 9.2 Preparation of DxI Sample Containers

If running a sample from a...	Then...
Primary Tube 15.3 x 92 mm open tube 5 mL S.62.611 Sarstedt	• Use the UniCel DxI *Sample Volume Guide* to determine adequate sample volume. • Remove the cap.
Primary Tube 13 x 100 mm open tube	• Use the UniCel DxI *Sample Volume Guide* to determine adequate sample volume. • Place in a 13 x 100 mm rack. • Remove the cap.
Primary Tube 16 x 75 mm open tube	• Use the UniCel DxI *Sample Volume Guide* to determine adequate sample volume. • Place in a 16 x 75 mm rack. • Remove the cap.
Primary Tube 16 x 100 mm open tube	• Use the UniCel DxI *Sample Volume Guide* to determine adequate sample volume. • Place in a 16 x 100 mm rack. • Remove the cap.
Primary Tube 75 x 15 mm open tube 5.5 mL Sarstedt S-Monovette	• Use the UniCel DxI *Sample Volume Guide* to determine adequate sample volume. • Place in a 16 x 75 mm rack. • Remove the cap.
3.0 mL Sample Container in 16 x 100 mm Rack	• Use the UniCel DxI *Sample Volume Guide* to determine adequate sample volume. • Make sure there are no bubbles in the insert cup.
Autoaliquot Tube	• Use the UniCel DxI *Sample Volume Guide* to determine adequate sample volume.Make sure there are no bubbles in the insert cup. • Place in a 13 x 100 mm rack.
Pediatric Insert Cup (PN 81916) in a Rack Adapter	• Use the UniCel DxI *Sample Volume Guidelines* to determine adequate sample volume.Make sure there are no bubbles in the insert cup. • Place in a 13 x 100 mm rack.
Primary Tube 11.5 x 66 mm 3.5 mL Sarstedt open tube	• Use the UniCel DxI *Sample Volume Guide* to determine adequate sample volume. • Place in a 13 x 75 mm rack.
SBCL 16 x 85 mm Tube open tube	• Use the UniCel DxI *Sample Volume Guide* to determine adequate sample volume. • Place in a 16 x 100 mm rack.
Low Volume Sample Vessel	• Use the UniCel DxI *Sample Volume Guide* to determine adequate sample volume. • Place in a Low Volume Sample Rack.

CHAPTER 10

System Setup

Introduction

Use these functions to set up the UniCel DxC Integrated Workstation.

To modify Auto ORDAC, Chemistry Configuration/Sample Type, Date/Time, Demographics Setup, Immediate Report, Replicates, Report Setup, Reportable Ranges, Reference/Critical Ranges, Units/Precision, Bar Code, Reserved Racks, Language/Keyboard, Printer Setup, DxI Priority/Reflex Test Setup, Auto Generation of Control, or UCTA Setup, the system must be in *Standby*, *Startup*, *Stopped*, *Instrument Down*, or *Homing* mode.

System Setup Screen

Introduction

This section summarizes the System Setup options depicted on the System Setup screens shown below:

Figure 10.1 System Setup Screen (scrolled to the top)

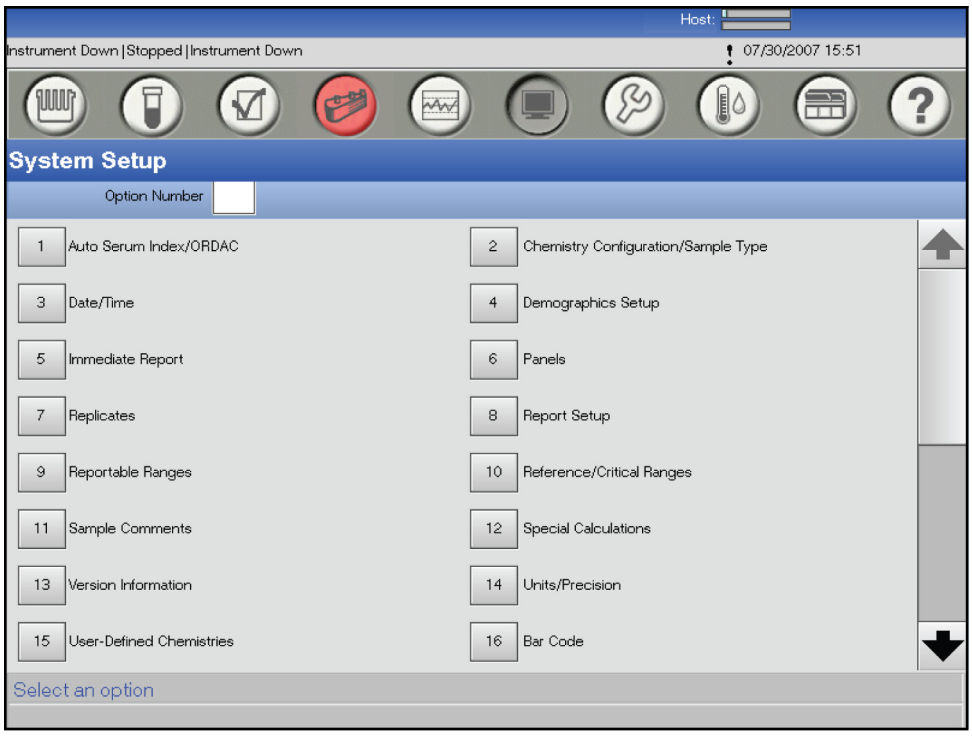

E007689S.PNG

Figure 10.2 System Setup Screen (scrolled to the bottom)

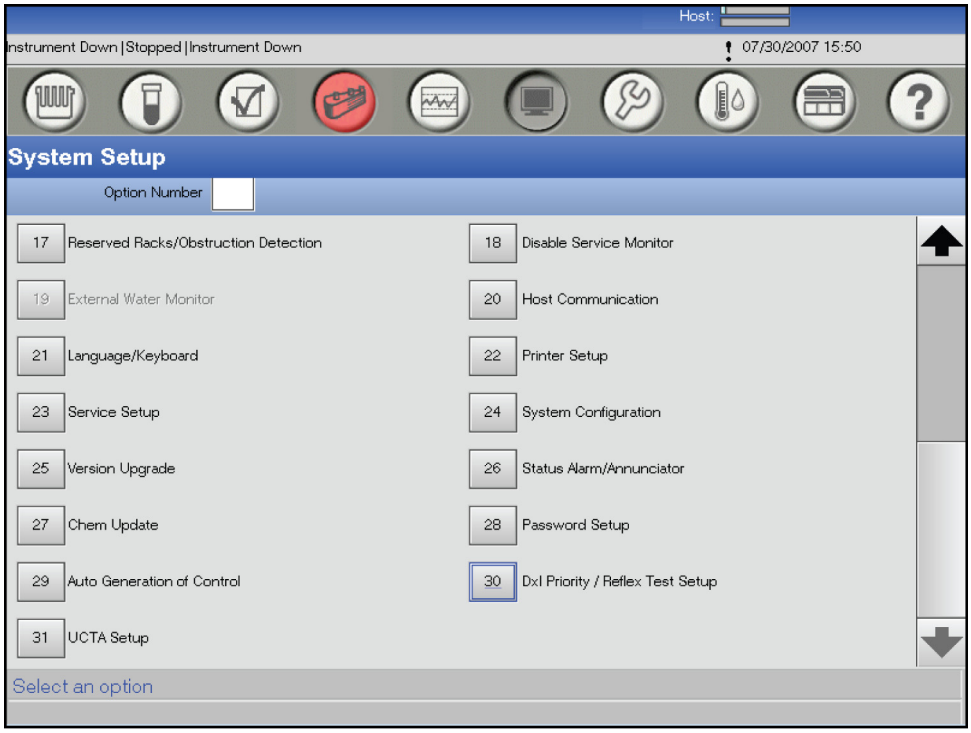

E007750S.PNG

For additional information on using the System Setup option, refer to the UniCel DxC Synchron Clinical Systems *Reference Manual*.

NOTE Validate any changes you make to your instrument setup with other components of your system (LIS, middleware, etc.).

Auto Serum Index/ORDAC

Auto ORDAC

Use Auto ORDAC (Over Range Detection and Correction) to enable or disable the automatic ORDAC function for specified chemistries (refer to the Synchron Clinical Systems *Chemistry Information Sheets* for a list of chemistries offering ORDAC). When a chemistry result exceeds the system limit and Auto ORDAC is enabled, the sample automatically reruns with either:

- a smaller sample size or
- an online sample dilution (chemistry dependent).

IMPORTANT The Analytical Range for each analyte is a high and low system limit found in the respective Chemistry Information Sheets (CIS). These are the ranges that Beckman Coulter has verified can be achieved by the system. There is no flagging associated with values exceeding these limits.

The Instrument Printable Range for each analyte are internal system limits. These ranges actually exceed the analytical ranges by a factor. This allows for precision variations and still permits a result to print even though it slightly exceeds the analytical range. Results outside this range are suppressed. The suppressed results are flagged OIR HI or OIR LO (**O**ut of **I**nstrument **R**ange). For information on defining Reportable Ranges, see Reportable Ranges Setup.

When you enable Auto ORDAC for Ig-A and Haptoglobin, the URDAC (Under Range Detection and Correction) feature is also enabled. Ig-A and Haptoglobin URDAC is used to analyze samples with concentrations below the analytical range. In this case, the system takes a larger sample volume.

A result that exceeds the Analytical Range, but not the Printable Range, will not trigger ORDAC. These samples can be rerun with the manual ORDAC option in Sample Programming or as an offline dilution. A 1:2 dilution is recommended. Chemistries designated with Manual ORDAC at the time of programming are run at the ORDAC sample volume.

From the System Setup screen, select **1 Auto Serum Index/ORDAC** to enable or disable ORDAC. The default for Auto ORDAC is **OFF**.

The Automatic ORDAC screen may be viewed at any time, however the system must be in *Standby* to modify the ORDAC selection.

NOTE Auto ORDAC is not valid for uric acid that is run on urine samples. The system displays an “invalid” chemistry message.

Auto Serum Index

The Auto Serum Index function may apply to the control material used in your lab. Enable the Auto Serum Index function to automatically analyze every serum and plasma sample for the detection of hemolysis, icterus and lipemia. The report includes numeric values (indices) for the relative concentrations (range).

The values are printed below the Special Calculations area of a patient report. The values are printed with the test results for a control sample.

Auto Serum Index is intended for sample integrity assessment only; not for patient diagnosis.

IMPORTANT When running the system with Automatic Serum Index enabled, remember to disable the serum index feature when choosing options to set the replicates. This prevents running indices needlessly.

For additional information on Serum Index, refer to the Synchron Clinical Systems *Chemistry Reference Manual*.

From the System Setup screen, select **1 Auto Serum Index/ORDAC** to enable/disable Auto Serum Index.

To enable or disable Auto Serum Index, the system must be in *Standby* or *Stopped*.

The default for Auto Serum Index is **OFF**.

Setting the Default Sample Type

Introduction

Default Sample Type allows for definition of the default sample type for all programmed samples. The sample type may be changed for individual samples while in the sample programming function.

NOTE This function sets the default sample type for both the DxC and the DxI. You cannot change the default sample type at the DxI console.

In sample programming, when you select the OTHER sample type, the system uses the parameters of the default sample type. (For instance, if the default sample type is serum, the system uses the serum reference ranges.)

Setup

To set the default sample type, from the System Setup screen, select **2 Chemistry Configuration/ Sample Type**. Select the **Default Sample Type** pull-down menu at the top of the screen.

Date/Time

Introduction

The Date/Time option allows the user to set the date and time, select the date and time formats that appear on all screens and reports, and restore date and time defaults.

The first time the instrument is powered up, the user must set the date and time. When set, changes to accommodate situations such as converting to daylight-savings time are performed through this option. The Date and Time screen may be viewed at any time, but may only be modified when the system status is *Standby* or *Stopped*.

NOTE This function sets the date and time for both the DxC and the DxI. You cannot change the date or time at the DxI console.

Setup

To display the Date and Time screen, from the System Setup screen select **3 Date/Time.** Then press **Date F1** or **Time F2** respectively to change the date and/or time for the system. Or you can press the **Restore F3** key to restore the default display format.

Default Date Display Formats:

- **Order:** Month Day Year
- **Day Format:** Leading Zero (01)
- **Month Format:** Leading Zero (01)
- **Year Format:** 1990
- **Separator:** /

Default Time Display Formats:

- **Time Format:** 24 Hour
- **Hour Format:** Leading Zero (01)
- **Separator:** :

IMPORTANT Changes to system date and/or time may affect reagent expiration date, calibration, quality control data, within-lot calibration status, and on-board stability dates for reagents.

Demographics Setup

Introduction

Use the Demographics Setup option to select the demographics fields that appear in the demographics display/printout of the Program Samples function.

Setup

From the System Setup screen, select **4 Demographics Setup** to enable, disable and restore defaults to demographic fields.

To change demographic field settings, the system must be in *Standby* or *Stopped*.

The system default is **ALL** demographics fields shown.

Patient Results – Immediate Reporting Setup

Introduction

Use Immediate Report to configure the system to print and/or send results to the Host as they are completed on the system. When these options are not selected, test results are not printed or sent to the Host until all tests are completed for the sample ID.

Immediate Patient Results Reporting to Host and/or Printer

From the System Setup screen, select **5 Immediate Report** to change settings for Immediate Reporting.

To change Immediate Reporting settings, the system must be in *Standby* or *Stopped*.

The default is all immediate reporting disabled (no boxes checked).

Select **Immediate Report of DxC** to send to the Host and/or printer any MC chemistry as soon as it is completed, and then send a final report of all DxC results when sample testing is complete.

Select **Immediate Report of Serum Index** to send to the Host and/or printer any Serum Index result as soon as it is completed.

Select both **Immediate Report of DxC** and **Immediate Report of Serum Index** to send to the Host and/or printer any MC and any Serum Index results as soon as they are completed, followed by a final report with all results when sample testing is completed.

Select **Immediate Report of DxI by Test** to send to the Host and/or printer any DxI assay as soon as it is completed.

When you select an Immediate Reporting option, the system defaults to **ALL** in the Host section to send to the Host all chemistries as soon as they are completed, whether or not they are programmed as STAT. You can change the selection to **STAT** in the Host section to send to the Host all chemistries programmed as STAT as soon as they are completed, or select **STAT** in the Printer section to print all chemistries programmed as STAT as soon as they are completed, or select **ALL** in the Printer section to print all chemistries as soon as they are completed, whether or not they are programmed as STAT.

Select **Immediate Report of Critical Rerun** to send to the Host only any Critical Result Rerun as soon as it is completed.

The system reports *Pending Test* for chemistries which are not complete at the time of interim STAT or ALL printed reports. The report includes any results that are complete at the time the report is generated. The system prints a final report with all results when sample testing is complete.

Panels

Introduction

The Panels option allows grouping of analytes commonly programmed and run together.

Define, Edit or Delete a Panel

You can define a maximum of 50 panels, and must assign a unique name to each.

1. Select **Setup** from the menu bar.
2. Select **6 Panels** from the System Setup screen.
3. Select a panel number(s) to define or modify, then select **Define F1** to define/edit or **Delete F2** to delete the panel(s).
4. When you select **Define F1**, the system displays the Panels screen.
   - If necessary, enter a panel name in the Panel Name field.
   - In the **Configured Chemistries** list box, select the chemistr(ies) you want to add to the panel and select the **Add** button to move them to the **Selected Chemistries** list box.
   - To remove a chemistry from the panel, select the chemistr(ies) in the **Selected Chemistries** list box and select the **Remove** button to move them to the **Configured Chemistries** list box, or select **Remove All** to move all the chemistries to the Configured Chemistries list box.
   - Select **Done F10** to return to the Panels Summary screen.
5. When you select **Delete F2**, the system displays a confirmation message. Select **OK** to delete the panel(s) and return to the Panels Summary screen.
6. Select **Done F10** to return to the System Setup screen.

Selecting a Default Panel

You can select one of the defined panels as the Default Panel. The DxC system selects the Default Panel as the test(s) to run when the sample ID has no programming assigned, or after a Host Query time-out.

From the System Setup screen, select **6 Panels**. From the resulting Panel Summary screen, select the panel that you want to serve as the default and press **Default F3**. The ">" character shows to the left of the selected Default Panel.

Replicates

Introduction

The Replicates option allows the operator to set up the number of replicates per sample, which is applied to all sample programs. The replicates per sample may also be edited by accessing a specific sample program.

A maximum of 20 replicates may be assayed from a sample. All results are printed and maintained in memory for recall.

Setup

From the System Setup screen, select **7 Replicates** to define the number of replicates or restore the system Default Replicates value.

The Replicates option may be viewed at any time.

The system must be in *Standby* or *Stopped* state to change replicates.

The default for replicates is **1**.

Report Setup

Introduction

This feature allows the operator to select the following options:

- Configure printing of Patient and Control Reports
- Define a Report Header to print at the top of each report

  NOTE This function sets the first four lines of the Report Header for both the DxC and the DxI. You cannot change this information at the DxI console.

  The following table lists the corresponding Report Header fields.

Table 10.1 Corresponding Report Header Fields

Workstation Console	DxI Console
Facility Name	Institution
Facility Address (line 1)	Lab Name
(line 2)	Address1
(line 3)	Address2

- Select from a variety of Patient Report formats, including printing continuous Lab Reports instead of printing each report on a separate page.
- Select from a variety of Control Report formats

- Define *Inter-Laboratory* information to print in a report
- Enable or disable Archive Calibration warnings and printing of Calibration Reports

Default settings:

- **Facility Name:** blank
- **Facility Address:** blank
- **ID Number:** blank
- **Attention Person**: blank
- **Patient Report format:** Lab Report
- **Control Report format:** Control Chart Report

Setup

From the System Setup screen, select **8 Report Setup** to make selections or changes to report setup specifications.

Report Setup may be viewed at any time.

The **Print Options** (enable/disable) may be changed when the system is in *Standby*.

The system must be in *Standby*, *Startup, Instrument Down, Homing* or *Stopped* to edit Patient or Control Report formats, Archive Calibration options, or the Inter-Laboratory information.

Archive Calibration Setup

From the System Setup screen, select **8 Report Setup**, then select **Cal F3** to display the Archive Calibration Setup dialog box.

The system always saves Calibration Reports electronically. **Print Calibration Report** is enabled by default, to print the Calibration Reports to paper. Deselect **Print Calibration Report** to stop printing the Calibration Reports on paper.

Archive Calibration Warnings is enabled by default, and displays warning messages when the time since the last archive reaches 180 days. Deselect **Archive Calibration Warnings** to disable these warning messages.

Reportable Ranges Setup

NOTE This setup applies to the DxC analyzer only. To configure the DxI reportable ranges, see the DxI Online Help.

Introduction

The three types of range limits that can be applied to each analyte are:

- Analytical Range
- Instrument Printable Range
- Reportable Range

Analytical Range

The Analytical Range for each analyte is a high and low system limit found in the respective Chemistry Information Sheets (CIS). These are the ranges that Beckman Coulter has verified can be achieved by the system. There is no flagging associated with values exceeding these limits.

Refer to the Synchron Clinical Systems *Chemistry Information Sheets* for Analytical Ranges by analyte.

Instrument Printable Range

The Instrument Printable Range is an internal system limit, specified in the Reportable Range Setup screen. The Instrument Printable range exceeds the Analytical Ranges by a factor. This allows for the printing/reporting of a result slightly above or below the Analytical Range, given small precision variations. A result outside of the Instrument Printable Range is suppressed. The suppressed results are flagged OIR HI or OIR LO (**O**ut of **I**nstrument **R**ange).

Reportable Range

NOTE QC is not evaluated per Reportable Range. QC will not suppress or flag based on an operator-defined Reportable Range.

The Reportable Range is operator-defined and represents the range verified at the operator's site. The Reportable Range may or may not be the same as the Analytical Range. A result exceeding the Reportable Range is flagged *ORR HI* or *ORR LO* (**O**ut of **R**eportable **R**ange).

The Reportable Range feature is available on all configured chemistries except drugs of abuse (DAT) and Beckman Coulter Performance Verification Tests (PVT).

The Reportable Range feature is available for User Defined Reagents (UDR). When any UDR parameter is edited, the instrument automatically changes the Reportable Range information to the Usable Result Range defined for the UDR. The Reportable Range must be re-entered if the values are different from the Usable Result Range.

Suppress Results Option

For each analyte and sample type, the operator may enable or disable the Suppress Results option. Results exceeding the Reportable Range are always flagged. If the **Suppress Results** check box is not checked, the result number is printed on the report and sent to the LIS along with the remark. When the **Suppress Results** check box is checked, instead of a numeric result the report will show Result Suppressed and the numeric result is not sent to the LIS.

The Suppress Result option is not available for any chemistry that can report a less-than (<) or greater-than (>) result. See the CIS for the individual chemistry for details.

The default for a **Reportable Range** is the **Printable Range**.

The default for **Suppress Results** is **OFF** (box is not checked).

The system must be in *Standby* or *Stopped* to edit these ranges.

Define, Edit or Suppress a Reportable Result

1. Select **Setup** from the menu bar.
2. Select **9 Reportable Ranges** from the System Setup screen.
3. In the Configured Chemistries list box, select the chemistr(ies) you want to edit and select the **Add** button to move them to the Selected Chemistries list box, or select **Add All** to move all the chemistries to the Selected Chemistries list box.
4. Select **Define/Edit** to display the Define/Edit Reportable Ranges screen for the first selected chemistry. Enter or change the reportable ranges as necessary.
5. Select **Next F9** to display the next chemistry, or **Done F10** to return to the Reportable Ranges screen.
6. Select **Cancel** to return to the System Setup screen.

Reference/Critical Ranges

Reference and Critical Ranges

Use Reference/Critical Ranges to define the normal and critical ranges for each analyte by age group, gender and sample type. You can define up to 32 age ranges, and select one reference range as the default.

Establish reference ranges based on your facility's population demographics.

The system uses the Critical Range limits in conjunction with the Critical Rerun option. When test results exceed the limits of the Critical Range, the system automatically reruns the analyte. You can delete one result or send both to the Host.

NOTE If you have enabled Immediate Report of Rerun (see Patient Results – Immediate Reporting Setup), the system automatically sends both results to the Host.

For complete instructions to establish Reference and Critical Ranges, refer to the UniCel DxC Synchron Clinical Systems *Reference Manual*, CHAPTER 3, *Detailed System Setup*.

Sample Comments Setup

Introduction

The Sample Comments option allows the operator to define a maximum of 20 comments for use in the Program Sample screen.

Setup

From the System Setup screen, select **11 Sample Comments** to define, edit or delete sample comments. Up to 25 alphanumeric characters, including spaces and punctuation, are allowed.

Sample Comments may be modified at any time.

Special Calculations Definition

Introduction

The DxC reports two types of special calculations with a sample:

- Predefined by Beckman Coulter
- User defined

The system can maintain up to 40 special calculations. You can enable or disable the predefined special calculations, but you cannot modify or delete them from the system. You can define and modify additional special calculations.

When you enable a special calculation, the system reports the value only when you program and run the appropriate chemistries for the equation with a given sample ID.

NOTE If you have both CO_2 and CO_2E loaded on your system, the Anion Gap special calculation uses CO_2. You must create a user-defined special calculation for CO_2E.

If you have only CO_2E loaded on your system, you must create a user-defined Anion Gap special calculation for CO_2E.

The system uses the full precision of the test's results when performing special calculations. If you manually calculate, using results that have been rounded, the results will be similar but will not match exactly.

For complete instructions to establish special calculations, refer to the UniCel DxC Synchron Clinical Systems *Reference Manual*, CHAPTER 3, *Detailed System Setup*.

Version Information

The Version Information screen provides a condensed reference to the software version number and the chemistry database number.

To display the Version Information screen, from the System Setup screen, select **13 Version Information**. To view the DxC license information, select **License F1**.

Units/Precision Setup

Introduction

Use the Units/Precision option to select the units and number of decimal places for each viewed and printed result.

When you alter the units, all features affected by the change, such as reference ranges and calibration values, automatically convert to match the new units.

NOTE The DxI stores results information in the units selected at the time the result was generated. These units do not convert if the units are changed after the fact. To match the units at both consoles, you must change the units at the workstation console to the previous units used.

This function sets the Units/Precision for both the DxC and the DxI. You cannot change this information at the DxI console.

Units cannot be changed for chemistries that are defined for a control in QC.

Setup

From the System Setup screen, select **14 Units/Precision** to modify units and number of decimal places.

The Unit Selection/Precision may be viewed at any time.

The system must be in *Standby* or *Stopped* to change unit selection or decimal places.

User Defined Chemistries Setup

Introduction

You can define a maximum of 71 chemistries on the Integrated Workstation.

Setup

Select **15 User-Defined Chemistries** from the System Setup screen.

For detailed information about User Defined chemistries, refer to User-Defined Reagents.

Bar Code Setup

Introduction

The Bar Code Setup option allows the operator to:

- Enable/disable sample bar code mode of operation
- Enable/disable sample bar code types
- Configure sample bar code parameters
- Restore defaults

The four sample bar code types that may be used on the Integrated Workstation are:

- Code 39
- Codabar
- Interleaved 2 of 5
- Code 128

Any combination of bar code types may be enabled.

Setup

From the System Setup screen, select **16 Bar Code** to enable/disable bar code types, to further define bar code parameters.

Bar Code Setup may be viewed at any time.

The system must be in *Standby* or *Stopped* to make modifications.

Bar Code Setup Defaults:

- **Bar Code mode:** Enabled
- **All bar code symbologies:** Enabled

NOTE When you enable **Bar Code Mode**, the Program Sample screen cursor appears in the **Sample ID** field. When you enable **Rack/Position Mode**, the cursor appears in the **Rack** field.

Maximum Sample Program Age

Introduction

This feature refers to the age of the sample program. You can define the period of time during which a sample ID can be reloaded on the system. If the period exceeds the Maximum Sample Program Age Limit, the system notifies you that the time limit has been exceeded so you can take appropriate action, such as clearing the Sample ID.

This feature is useful when *Sample ID*s are reused regularly.

Setup

From the System Setup screen, select **16 Bar Code** and select **Maximum Sample Program Age** to enable this feature. The operator can enter the time limit in hours or days.

The system must be in *Standby* to make changes.

The default is *disabled*.

Reserved Rack Setup

Refer to the UniCel DxC Synchron Clinical Systems *Reference Manual* for this procedure.

Host Communications

Introduction

Table 10.2 following lists the Host communications parameters, the options of each, and the default values.

Table 10.2 DxC Host Communications Parameter Options for ASTM, LX20/DxC, CX7 Compatible

Parameter	Serial Options	TCP/IP Options	Default
Transport	Serial or TCP/IP		Serial
IP Address	NA[a]	NNN.NNN.NNN.NNN	Blank
Port #	NA	Up to 5 digits Range: 0-65535	12003
Data Bits	7 or 8	NA	8[b]
Stop Bits	1 or 2	NA	1[b]
ASTM Header	Short or Long		Short
3 Digit Rack Number	Selected or Not Selected (CX7 Compatible only)		Not Selected
Device ID	0-99		0
Flow Control	Software (XON/XOFF), Hardware (RTS/CTS)[c] or none	NA	Software (XON/XOFF)
Data Transmission Mode	Transmission OFF, Unidirectional, Bidirectional or Bidirectional with Query		Bidirectional
Interface	CX7 Compatible LX20 ASTM		CX7 Compatible
Parity	None, Odd or Even	NA	None[b]
Baud Rate	300, 1200, 2400, 4800, 9600, 19200	NA	9600
Query Timeout	2½, 4 or 6 minutes		2½ minutes

Table 10.2 DxC Host Communications Parameter Options for ASTM, LX20/DxC, CX7 Compatible *(Continued)*

Parameter	Serial Options	TCP/IP Options	Default
Requery (Automatic Requery of Host)	Selected or Not Selected		Not Selected
Query Terminator	Selected or Not Selected ASTM only		Selected
< or > symbols	Host does NOT accept either < or > symbols		Selected

a. NA= Not Applicable
b. For Data Bits, Stop Bits and Parity, the Default Options are recommended settings when serial transport is selected.
c. For Flow Control, do not select the Hardware (RTS/CTS) option. With the Hardware option, ESD interference may affect the performance.

Setup

From the System Setup screen, scroll down and select **20 Host Communication** to select parameters or restore defaults.

The system must be in *Standby* or *Stopped* to make modifications.

Refer to the UniCel DxC Synchron Clinical Systems *Host Interface Specifications* for comprehensive documentation for the Host parameters.

NOTE The Lexmark printer cannot print on B5 paper.

Language/Keyboard Setup

Introduction

The Language/Keyboard Setup option allows the operator to select from the following languages for instrument operation:

- English
- French
- German
- Italian
- Spanish
- Japanese
- Simplified Chinese

NOTE This function sets the languages and keyboard for both the DxC and the DxI. You cannot change this information at the DxI console.

Setup

From the System Setup screen, scroll down and select **21 Language/Keyboard** to select and activate the desired language or keyboard.

Changing from Japanese to any other language or keyboard will require a reloading of the operating software.

The system must be in *Standby* or *Stopped* to make modifications. You must reboot the system for changes to take effect. See Shut Down the DxC and Restart the DxC.

Printer Setup

Introduction

The Printer Setup option allows selection of paper size.

Setup

From the System Setup screen, scroll down and select **22 Printer Setup** to select one of three paper sizes.

The system must be in Standby to make modifications.

The default paper size is **U. S. Domestic (8 ½ x 11 inches)**.

For laser printers use laser printer quality paper.

NOTE The Lexmark printer cannot print on B5 paper.

System Configuration

⚠ CAUTION

Changes to the information in this area should only be done at the request or at the direction of Beckman Coulter, Inc. Entry of incorrect information will lead to system errors.

Version Upgrade

Please refer to the UniCel DxC *Software Installation Procedure* shipped with the CD-ROM.

Status Alarm/Annunciator

Introduction

The Status Alarm/Annunciator option allows the operator to:

- Select from 5 different audible alarm patterns
- Test the audible alarm
- Disable the audible alarm

Setup

From the System Setup screen, scroll down and select **26 Status Alarm/Annunciator** to select an alarm pattern, test or disable the alarm.

The system default is NO ALARM.

Changes to the alarm may be made at any time.

Although the system will continue providing pop-up notes requiring operator attention, disabling the alarm will not sound an audible alert.

Chemistry Update

Please refer to the UniCel DxC *Software Installation Procedure* shipped with the CD-ROM.

Password Setup

Introduction

This function establishes passwords for both the DxC and DxI instruments. You cannot create passwords at the DxI console.

The Password Setup option allows the operator to:

- Assign up to 100 user names and their passwords
- Assign Administrator or Operator level privileges to each user name
- Define/edit or delete user name/password setup
- Enable/disable security for accessibility to certain system functions and setups

The following features may be password secured:

- Results--Edit
- Rgts/Cal--Modify Set Points
- Rgts/Cal--Slope/Offset Adjustment
- Rgts/Cal--Within Lot Calibration
- Rgts/Cal--Enzyme Validator
- QC
- System Setup
- Utils--Clear Event Log

Define/Edit Password Setup

To define, edit or delete user names, passwords, privilege levels and accessibility levels, follow the procedure below.

NOTE You need the system password to use this feature. If you do not know the password, contact your lab supervisor.

---

1 Select **Setup** from the menu bar.

---

2 Select **28 Password Setup** from the System Setup screen.

---

3 Enter an Administrator password in the Administrator Password dialog box. Select **OK**.

---

4 The Password Setup dialog box shows the list of the users with password security.

- Select **New F1** to enter the password setup for a new user.

  OR
- To edit the password setup for a user, select the user's password number.
- Select **Define F2**.

---

5 In the Define/Edit Password dialog box, enter the information requested.

- Select **Administrator** in the **Title** field to allow the user to modify password setup.

  OR
- Select **Operator** in the **Title** field to NOT allow the user to modify password setup.
- Select **OK**.

6 The new or edited user is now in the Password Setup screen in alphabetical order by last name.

Refer to the UniCel DxC Synchron Clinical Systems *Reference Manual* for additional information on deleting users from the Password List, and enabling and disabling password security for functions.

Auto Generation of Control

Introduction

When this feature is enabled, if a sample is loaded with a defined control ID, the instrument will *automatically* run any chemistry that is on-board and runnable for that control.

When Auto Generation of Control is enabled, the automatic Multiple Cartridge option is available for DxC chemistries. With the Multiple Cartridge option enabled, the system automatically runs all cartridges on-board and runnable for any chemistries for an Auto Generated control. Enabling Multiple Cartridge without Auto Generation has no effect on the manual programming of control samples.

Setup

From the System Setup screen, scroll down and select **29 Auto Generation of Control** to enable/disable either feature.

The system must be in *Standby* or *Stopped* to make modifications.

The default is *disabled*.

DxI Priority/Reflex Test Setup

DxI Priority

Use the DxI Priority/Reflex option to ensure the system processes programmed samples on the DxI analyzer first.

1 Select **Setup** from the menu bar.

2 Select **30 DxI Priority/Reflex Test Setup**.

3 Select the **DxI Priority** check box on the screen and **Done F10**.

IMPORTANT If DxI Priority is enabled, and the DxI is not operational, the system will not process samples programmed for general chemistries and immunoassays.

DxI-to-DxI Reflex Testing Defined at the DxI Console:

If a DxI assay result may require reflex testing, the Integrated Workstation can be configured to aspirate a reserve volume of sample to hold for the prospective reflex tests, based on rack definition. (See the UniCel DxC Synchron Clinical Systems *Reference Manual* for rack setup instructions.) The Integrated Workstation does not aspirate reserve volume for controls defined at the workstation console.

NOTE You can configure DxI-to-DxI reflex testing based on test results only, not patient demographics.

The SV remains on the DxI analyzer until it is determined if it needs to perform the reflex test. At that point, the DxI performs the reflex test or discards the SV. Refer to the DxI Online Help for further details.

Configure DxI Reserve Volume

Use this procedure to configure the Integrated Workstation to aspirate reserve volume for samples that may require reflex testing on the DxI. Perform this procedure at the DxI console.

1. Select **Configure F8** from the DxI Main Menu, then select **Reflex Tests F5**.
2. Select **Reserve Volume Setup F3.**
3. Check the **Enable Reserve Volume** check box.
4. If you have configured Standard racks, type the standard volume amount in the **Standard Amount (µL) to Draw** field.

   NOTE The **Standard Amount (µL) to Draw** field determines the maximum reserve volume the system will aspirate for standard racks.
5. Select **OK F1**.

Reflex Testing Defined at the DL2000/Remisol Advance or Host:

You can define reflex rules externally to the Integrated Workstation at the DL2000 Data Manager/ Remisol Advance, or at the Host. You can set up DxC-to-DxC, DxC-to-DxI, or DxI-to-DxI to run reflex tests. Refer to the DL2000 *Operations Manual* or your Host (LIS) *Operations Manual* for further details.

Set Up the Integrated Workstation to Set Up the Reflex Test on the DL2000/Remisol Advance or Host

1. Select **Setup** from the menu bar.
2. Select **30 DxI Priority/Reflex Test** Setup.
3. Check the box next to the chemistry to recirculate the rack on the system.
4. Select **Done F10**.
5. Select **20 Host Communication**.
6. Select the **Requery** box on the screen and **Done F10**.

The Integrated Workstation automatically recirculates the sample racks that contain a sample programmed with a reflex conditioned test. When the initial test is completed, the DL2000/Remisol Advance or Host determines if the reflex test needs to be performed. The Integrated Workstation queries the DL2000/Remisol Advance or Host again for the reflex test. If the Integrated Workstation receives the reflex test programming, it performs the reflex test for that sample. If it does not receive additional tests for that sample, it offloads the rack. If the sample becomes *Incomplete*, the system offloads the sample and without performing a reflex test.

NOTE When the Integrated Workstation re-queries DL2000/Remisol Advance or the Host, it deletes the prior test programming for the sample. The prior programming CANNOT be recalled. These results should be available at DL2000/Remisol Advance or Host.

UCTA Setup

Use this function to enable or disable the UCTA Aliquot/Piercer Probe units. You can enable/disable an individual probe unit, or both probe units.

The Disable Probe function is a tool for chemistry diagnostics. Disable a probe only if you suspect carryover or other chemistry performance issues.

Do not disable a non-functioning probe. Use Independant Mode, if necessary, until you can fix or replace the non-functioning probe.

Enable/Disable UCTA Probes

1. Select **Setup** from the menu bar.
2. Select **31 UCTA Setup** from the System Setup screen.
3. Select **UCTA Left Probe** to disable the left probe unit. Select **UCTA Right Probe** to disable the right probe unit. To enable the probe units, deselect them.
4. Select **OK** to return to the System Setup screen.

Configure the Chemistry Menu

Introduction

- Use the Chemistry Configuration/Sample Type function to install tests from a comprehensive list of available chemistries.
- You can select up to 180 chemistries and position them onto the menu, customized to match the test order on the lab request forms.
- Modular chemistries (MC) are permanently configured on the system. You can relocate these chemistries on the configuration screen, but you cannot remove them.
- You can only configure BUNm or UREAm one at a time. To replace one with the other, reload the software and select the appropriate chemistry during installation.
- You can view the Chem. Configuration/Default Sample Type screen at any time, but you can modify it only when the system status is *Standby* or *Stopped*.

Configure a Beckman Coulter Chemistry

You can configure the chemistry menu, available in Sample Programming, Quality Control, Panel Definition and other screens. To define Beckman Coulter chemistries, select **2 Chemistry Configuration/Sample Type** from the System Setup screen. Place the cursor in an open field in the Chem. Configuration/Default Sample Type screen and press **Chems F1**. Select the chemistry from the pop-up list.

NOTE You must enable DxI assays from this menu also. You cannot enable assays from the DxI console.

Configure a User Defined Chemistry (UDR)

To define a User Defined Chemistry (UDR), select **15 User-Defined Chemistries** from the System Setup screen.

To configure the UDR, select **2 Chemistry Configuration/Sample Type** from the System Setup screen. On the Chem. Configuration/Default Sample Type screen, select **UDR F2** to display a list of all User Defined Chemistries on the system. Refer to User-Defined Reagents in this chapter for additional information on user-defined parameters.

NOTE Do not use the OTHER sample type with UDRs. It is not supported by the system.

Define Chemistry Print Name

Use the Define Print Names function to define the chemistry name that appears on the chartable report. You can give each chemistry a name of up to 15 characters. To define the chemistry print name, select **2 Chemistry Configuration/Sample Type** from the System Setup screen. Select **Define F3** from the Chem. Configuration/Default Sample Type screen, then enter the chemistry name in the **Print Name** field.

Insert a Chemistry

The **Insert F5** function inserts a blank position for adding a chemistry to the menu.

Delete a Chemistry

To use the Delete Chemistry function, first clear the calibration, sample programming and control (QC) information for the chemistry from the system. Beckman Coulter recommends that you remove chemistries from the system following the sequence and procedures below to prevent problems with deleting chemistries from the QC definition:

IMPORTANT Control samples in the "sample required," "incomplete" or "rerun" status may prevent the removal of the chemistry from the QC definition.

Remove the Chemistry from Reagent/Calibration (Example: DIGN)

1. Select **Rgts/Cal** from the menu bar.

2. Ensure the cal status of the chemistry DIGN is not "Requested." To cancel a calibration request:
   - Select the position for the appropriate requested and assigned chemistry to be canceled.
   - Select **No Cal F8** to cancel the calibration request. Chemistries currently selected may be canceled only if the calibration is not yet in progress.

3. Remove calibrator assignments. To clear calibrator bar code ID and/or rack and position:
   - Select **Assign F7**.

- Select **Next** or **Prev** to locate the calibrator of interest.

  OR
- Select the **Calibrator Name** pull-down menu at the top of the Assign Barcode/Rack dialog box to view the List of Calibrators.
- To clear the fields select the **Calibrator ID, Rack** and **Position** fields for each level of calibrator and press (Delete) on the keyboard.
- Select **Close** to exit and save information.

4 Remove the reagent cartridge. To remove the reagent cartridge DIGN:

- Select the position for the chemistry to be removed.
- Select **Load F1**.
- When prompted by the instrument to remove the reagent cartridge, open the reagent carousel door to remove the cartridge. The reagent cartridge may be scanned off if it has a bar code or select **Clear F1** to remove reagent data.
- Close the reagent carousel door.

Remove the Chemistry from Sample Programming (Example: DIGN)

IMPORTANT All samples in the *Sample Required, Incomplete* and *Rerun* status need to be cleared before the chemistry can be deleted. Samples in the *In Progress* or *Removed* status should be allowed to proceed to *Complete* or *Incomplete* status.

1 Select **Samples** from the menu bar.

2 Select **List F9**.

3 Select the **Status** field pull-down menu at the bottom of the Load List dialog box to view the List of Sample Status.

4 Select *Sample Required* for a list of samples.

5 Select **Display** to show the load list on the screen. The Load List may then be printed by selecting **Print** to print, or **OK** to exit.

6 Repeat Steps 1-5 in this section to request load lists for samples in the *Incomplete* and *Rerun* status. For Step 5:

- Select *Incomplete* for a list of samples.
- Select *Rerun* for a list of samples.

7 Look for the chemistry to be de-configured, **DIGN**, in each load list and clear these samples. Refer to Procedure for Clearing Samples in CHAPTER 4, *Sample Programming and Processing* for information on how to clear sample programming.

Remove the Chemistry from the Quality Control (QC) program

If a control is defined solely for that chemistry and is no longer needed, the entire control definition should be deleted.

1 Select **QC** from the menu bar.

2 Select the control number to be cleared.

3 Select **Delete F3**.

4 The following message appears to confirm the clearing of the selected control:
"*All QC files for the control will be deleted. Archiving is suggested. Delete this control?*"
Select **OK** to delete the control.

5 If the control was deleted, enter an operator ID.

Delete a Single Chemistry

If the control definition contains the chemistry along with other chemistries that should not be deleted, you can delete a single chemistry.

1 Select **QC** from the menu bar.

2 Select the control number.

3 Select **Define F2**.

4 Select **Chems F1** to display the QC Chemistries screen.

5 To remove a chemistry, select the name in the **QC Selected Chemistries** list box.

6 The following message appears to confirm the clearing of the selected chemistries from the control: "*QC data and statistics for this chemistry will be deleted. Archiving is suggested. Deselect this chemistry?*"

- Select **OK**.
- and select **Remove** to remove the chemistry.
- Select **OK** to exit the screen.
- Select **Done F10** to return to the Main Menu.

Delete a chemistry from the system

1 Select **Setup** from the menu bar.

2 Select **2 Chemistry Configuration/Sample Type**.

3 Select Configured chemistry position number.

4 Select **Delete F6**.

5 Select **Done F10** to return to the System Setup screen.

IMPORTANT Before de-configuring a chemistry, remove stored patient results containing that chemistry from the system. To delete patient results, refer to Clear Samples.

User-Defined Reagents

You can define up to 71 chemistries on the Integrated Workstation using an endpoint or rate, and calibrated or non-calibrated methodology. You must define a set of parameters which fully characterizes an analyte. When you define the parameters, they are stored in memory by the chemistry name you designated in UDR Definition. You can then configure tests on the test selection menu using the chem name for programming along with the Beckman Coulter-defined chemistries. You can also define and use quality control, reference ranges, ORDAC, and special calculations with these configured chemistries.

You can configure up to 10 of the 71 user-defined chemistries with the Expanded User Defined Chemistry feature. Refer to the end of this chapter for further information.

Requirements and Precautions

Minimum Requirements for Operation

You must define the following parameters to use the User-Defined Reagent feature.

- chem name
- primary wavelength
- secondary wavelength (except for the LPIA Module)
- reagent dispense volume
- sample volume
- blank start and blank end read times
- reaction start and reaction end read times.

If you define additional parameters, the reagent must pass Exit Check criteria. Refer to Exit Check Criteria in this chapter.

User-Defined Reagent Cartridges

Place the user-defined reagent in generic, non-bar code labeled, three-compartment cartridges that you load onto the system manually. These cartridges are available in a box of 12 (PN 442835).

Mark the label on the cartridge with the reagent name and expiration date. The following table lists maximum and minimum fill volumes, required to allow for accurate level sensing.

Table 10.3 Fill Volumes for Accurate Level Sensing

	Compartment A	Compartment B	Compartment C
Maximum Fill Volume	110 mL	18 mL	4 mL
Minimum Fill Volume	6 mL	1 mL	0.3 mL

IMPORTANT Since Beckman Coulter does not manufacture or otherwise control the reagents that may be used in user defined reagent cartridges, Beckman Coulter makes no warranty whatsoever with respect to such reagent's performance (including test results), their effect on the system or required system maintenance or the frequency thereof, or their effect on operator safety. User assumes full responsibility for use of the proper test protocol and test result generation for the reagent(s) selected by the user and for any errors or omissions associated therewith. BECKMAN COULTER EXPRESSLY DISCLAIMS ALL WARRANTIES WITH RESPECT TO THIS PRODUCT WHETHER EXPRESS OR IMPLIED, INCLUDING WARRANTIES OF MERCHANTABILITY OR FITNESS FOR A PARTICULAR PURPOSE.

IMPORTANT Non-Beckman Coulter reagents, calibrators, and controls can contain components, not listed on the insert, which may carry over into the system causing chemical or spectral interference. This carryover could adversely affect results on a properly performing system. Contact the manufacturers of user-defined reagents for disclosure of potentially interfering substances, such as preservatives.

User-Defined Reagent Setup

Define a User-Defined Reagent

1. Select **Setup** from the menu bar.
2. Select **15 User-Defined Chemistries**.
3. Select the Number to be defined.
4. Select **Define F1**.
5. Type information for the user-defined reagent as defined on the following screens:
   - Chemistry Parameters
   - Processing Parameters
   - Error Detection Limits
6. Select **Done F10** to save and exit.
   - If an area is incomplete or incorrect, a flag appears indicating the error.
     - Perform the appropriate action to continue.
     - Refer to Exit Check Criteria in this chapter for additional information.

Edit a User-Defined Reagent

User-defined reagent parameters may be edited if:

- The reagent is not on board.

  OR
- The reagent is loaded on board and the system is in *Standby* or *Stopped*. To modify the number of calibrations used, the calibrator assignments must be removed.

Chemistry Parameters

Define a Chemistry Test Name

A test name cannot begin with a numeric entry or be defined the same as an existing chemistry test name. The test name is stored and retrieved in upper case letters only. The designated test name is used as the chemistry code as described in CHAPTER 4, *Tables/Codes,* in the UniCel DxC Synchron Clinical Systems *Host Interface Specifications* manual.

Table 10.4 Allowable Entries for a Chemistry Test Name

A maximum of four alphanumeric characters, including "-".
The first character MUST be an alphabetical character.

Reaction Type

Refer to CHAPTER 2, *Theory of Operation*, Cartridge Chemistry: Principles of Measurement in the UniCel DxC Synchron Clinical Systems *Reference Manual* for a detailed explanation of each type.

Table 10.5 Reaction Type Options

Reaction Type	Description
Endpoint 1	Blank absorbance is not subtracted from Reaction 1 absorbance.
Endpoint 2	Blank absorbance is subtracted from Reaction 1 absorbance.
Endpoint 3	Blank absorbance is volume corrected and then subtracted from Reaction 1 absorbance.
Endpoint 4	Blank absorbance is subtracted from Reaction 2 absorbance.
Endpoint 5	Reaction 1 absorbance is subtracted from Reaction 2 absorbance.
Rate 1	Blank rate is not subtracted from Reaction 1 rate.
Rate 2	Blank rate is subtracted from Reaction 1 rate.
Rate 3	Blank rate is volume corrected and then subtracted from Reaction 1 rate.
Rate 4	Blank rate is subtracted from Reaction 2 rate.
Rate 5	Reaction 1 rate is subtracted from Reaction 2 rate.

Units

Changing previously defined units for a user defined reagent is not allowed if the chemistry is included in a current control definition. In addition, changing units invalidates recalled results and deletes associated reference ranges.

Table 10.6 Options for Units

mg/dL	µg/mL	IU/mL	negative	mg/mL
mg/L	ng/mL	U/mL	pg/mL	ng/L
g/dL	µg/dL	Rate	pg/dL	RLU
g/L	µg/L	ng/dL	pmol/L	S/CO
mmol/L	nmol/L	µIU/mL	%Uptake	AU/mL
µmol/L	U/L	mIU/mL	%GHb	AU/L
mEq/L	other	Ku/L	%A1c	mAU/L
nKat/L	%	nIU/dL	GPL	mAUL/mL
µKat/L	mA	mIU/L	MPL	(i) SI
IU/L	mA/min	positive	APL	% Supp
SGU	SMU	SAU		

Precision

Precision specifies the number of decimal places for reporting results.

Table 10.7 Options for Precision

X
X.X
X.XX
X.XXX

Reaction Direction

A positive reaction direction indicates increasing absorbance with time. A negative reaction direction indicates decreasing absorbance with time.

Table 10.8 Options for Reaction Direction

Positive
Negative

Math Model

Refer to Cartridge Chemistry: Calibration Theory in CHAPTER 11, *System Reference* for a detailed explanation of each selection.

Table 10.9 Options for Math Models

Linear
Math Model 1 - 4 Parameter Log-logit function
Math Model 2 - 5 Parameter Logit function
Math Model 3 - 5 Parameter Exponential function
Math Model 8 - Alternative to Model 2, 5 Parameter Logit function
Math Model 9 - Extension to Model 1, 4 Parameter Log-logit function
DAT Math Model

Primary Wavelength

The primary wavelength is used to measure the desired chromophore.

Table 10.10 Options for Primary Wavelengths for the Photometer

340, 380, 410, 470, 520, 560, 600, 650, 670, 700 or 940[a] nm

a. Refer to Expanded User Defined Chemistry Feature for more information.

Secondary Wavelength

The secondary wavelength is used for flash correction of the primary absorbance values. The primary and secondary wavelength cannot be equal.

Table 10.11 Options for Secondary Wavelengths

340, 380, 410, 470, 520, 560, 600, 650, 670, or 700 nm

Calculation Factor

A calculation factor should be entered if no calibrators are defined. If a calculation factor is not defined, the system will not accept the default value of 0, and the user must type 1. For downgoing reactions, the entry must be a negative number.

For calculating the appropriate factor for rate chemistries, a derivation of the Beer's Law formula as applied to bichromatic chemistries can be used as follows:

$$\frac{T.V.}{S.V.} \times \frac{1000}{0.5(e_1 - e_2)}$$

E014426L.PNG

where:

e_1 = The extinction coefficient of the chromophore at the primary wavelength.

e_2 = The extinction coefficient of the chromophore at the secondary wavelength.

Extinction coefficients for the chromophore MUST be obtained from the reagent manufacturer or determined experimentally (refer to Determination of Extinction Coefficients in this chapter).

T.V. = Total reaction volume (sample plus reagent, µL)

S.V. = Sample volume (µL)

0.5 = Cuvette pathlength (cm)

1000 = Units correction factor

Table 10.12 Allowable Entries for a Calculation Factor

-99999.000 to 99999.000, except 0

Number of Calibrators

- If no calibrators are used, type 0.
  - A linear math model allows no more than two calibrators.
  - A non-linear math model requires five or more calibrators.
- If two or more calibrators are used, span values are shown.
- If five or more calibrators are used, recovery and sensitivity statistics are also shown.

Table 10.13 Options for the Number of Calibrators

0, 1, 2, 3, 5, or 6

Calibrator Set Points

IMPORTANT Any changes to the calibrator values for a User Defined Reagent must be modified within the user-defined parameters setup. These must not be changed using the Rgts/Cal menu.

The set points must be entered in the same units as specified in the Units parameter. Type the set points for the number of calibrators stated above in ascending order (low to high). This facilitates proper placement of the calibration samples on the rack, since the load list does not denote the cup order of the user-defined calibrators. All other set points are disregarded.

Table 10.14 Allowable Entries for the Calibrator Values

-9999.000 to 9999.000

Calibration Time Limit

Calibration time limit is the number of hours the chemistry can be run before recalibration is required. If this time is exceeded, the chemistry cannot be run. This parameter is not applicable if the number of calibrators is zero. (Refer to CHAPTER 6, *Supplies* for calibration procedures.)

IMPORTANT If the UDR is removed from the instrument, calibration is lost. To enable Cal Save, refer to Expanded User Defined Chemistry Feature in this chapter.

Table 10.15 Allowable Entries for the Calibration Time Limit

1 to 336 hours

Processing Parameters

First Inject: Component

The First Inject component designates the compartment of the cartridge which will be pipetted first.

Table 10.16 Options for the First Inject Component

A, B, or C

First Inject: Dispense Volume

The combined volume of all inject reagents must be between 200 and 327 µL. If Second Inject and Third Inject reagents are not used, the minimum volume for First Inject is 200 µL.

Table 10.17 Allowable Entries for the First Inject Dispense Volume

125 to 327 µL

Second Inject: Component

The Second Inject component designates the compartment of the cartridge which will be pipetted second. If Second Inject is not used, the default compartment selection is *None* and should not be modified.

Table 10.18 Options for the Second Inject Component

None, A, B, or C

Second Inject: Dispense Volume

The combined volume of all inject reagents must be between 200 µL and 327 µL.

Table 10.19 Allowable Entries for the Second Inject Dispense Volume

6 to 75 µL

Second Inject: Add Time

Add Time programs the reagent dispense time into the cuvette. Refer to Figure 10.3.

- The Second Inject may be added at the same time as First Inject or a minimum of 8 seconds after sample has been pipetted. (Time is entered in increments of 1 second; however, the reagent is added at the 8-second interval closest to the time defined. Sample addition occurs at 1 second.)
- A positive number indicates a Second Inject reagent component is added after sample add.
- An add time value of -180 dispenses reagent at the same time as First Inject reagent component.

Table 10.20 Allowable Entries for Add Time for the Second Inject

-180, 9 to 738 seconds

IMPORTANT When defining a UDR, the second inject is automatically moved to the third inject if only the first and second injects are defined.

Figure 10.3 Timing Chart

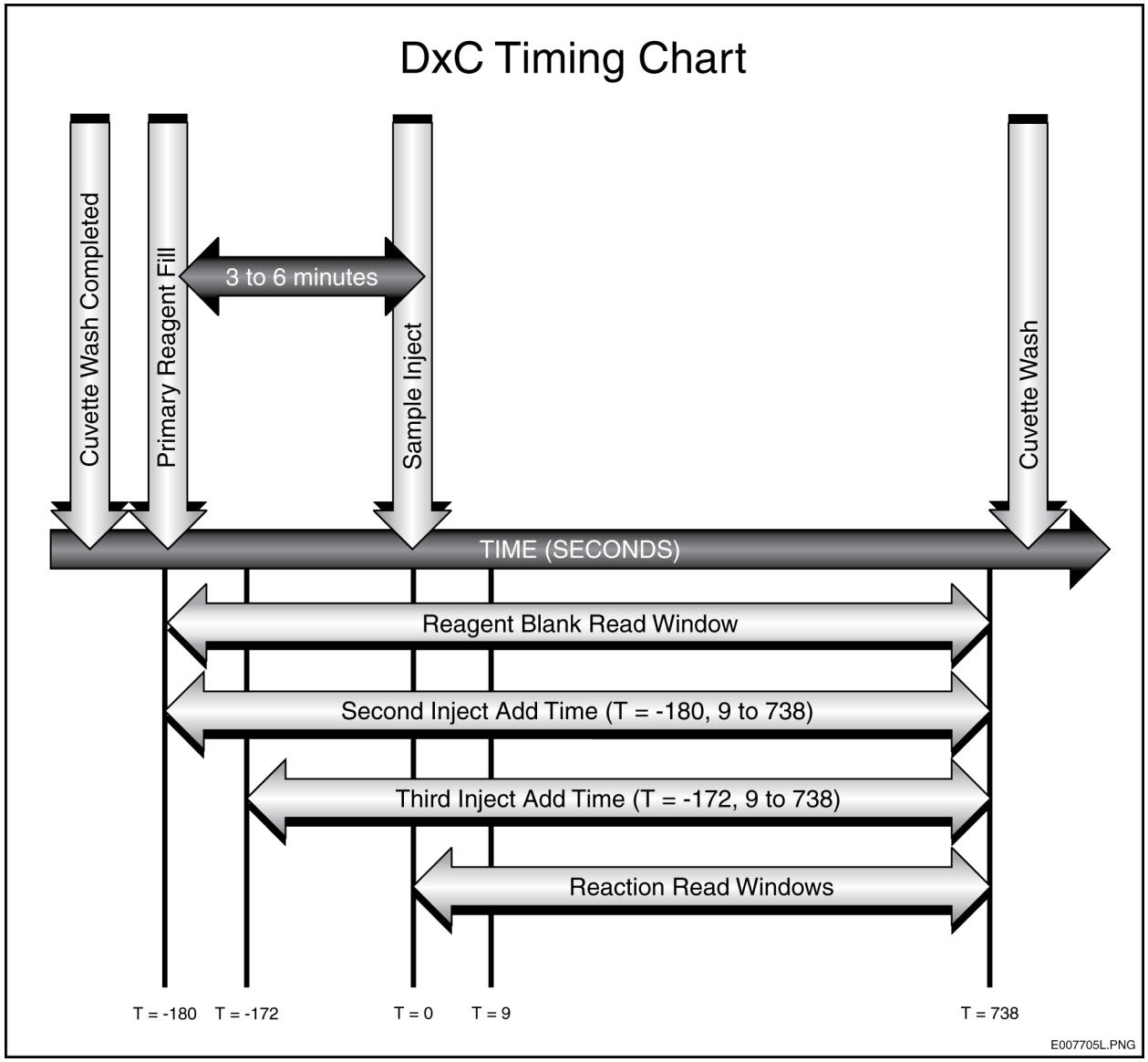

Third Inject: Component

This designates the compartment of the cartridge which will be pipetted third. If Third Inject is not used, the default compartment selection is *None* and should not be modified.

Table 10.21 Options for the Third Inject Component

None, A, B, or C

Third Inject: Dispense Volume

The combined volume of all inject reagents must be between 200 and 327 µL.

Table 10.22 Options for the Third Inject Dispense Volume

6 to 75 µL

Third Inject: Add Time

Add Time programs the reagent dispense time into the cuvette.

- The Third Inject may be added a minimum of 8 seconds after reagent(s) and/or sample have been pipetted. (Time is entered in increments of 1 second; however, the reagent is added at the 8-second interval closest to the time defined. Sample addition occurs at 1 second.)
- A positive number indicates Third Inject reagent component is added after sample add.
- Third Inject add time must be greater than Second Inject add time.

Table 10.23 Allowable Entries for Add Time for the Third Inject

-172, 9 to 738 seconds

Sample Volume

Total volume of sample and reagents A, B, and C cannot exceed 330 µL. Volume is specified in increments of 1 µL.

Table 10.24 Allowable Entries for Sample Volume

3 to 40 µL

Blank Read Times

Blank read times indicate when the blank absorbance is to be read.

- Time -180 to -1 is a reagent blank.
- Time 1 is when sample is added to the cuvette.
- Time 1 to 720 is a sample blank.
- Time is entered in 1-second intervals, but readings begin and end at the closest 8-second interval.
- Read times should not coincide with a pipetting cycle.

Table 10.25 Blank Read Times

	Allowable Entry
Start Read	-180 to 1704 seconds, except 0
End Read	-180 to 1720 seconds, except 0

Initial Read Times

The initial read time is defined in the initial read time window for the rate or end point measurement. The end time must be at least 8 seconds greater than the start time.

Table 10.26 Initial Read Times

Allowable Entry	
Start Read	1 to 1704 seconds
End Read	9 to 1720 seconds

If the initial read times are not entered, the default values are defined as follows:

- Reaction starts with sample addition (sample is added at cycle 1). Initial read starts at cycle 1 and ends at cycle 2.
- Reaction starts with trigger reagent (trigger reagent is added at cycle N). The initial read starts at cycle N and ends at cycle N + 1.

Reaction Read Times

Reaction read times indicate when the reaction is to be read.

- Time 1 is when sample has been added to the cuvette.
- Time is entered in 1-second intervals, but readings begin at the next 8-second interval.

Table 10.27 Reaction Read Times

Allowable Entries		
	Single Cycle Test	**Double Cycle Test[a]**
Start Read	1 to 1704 seconds	1 to 1604 seconds
End Read	1 to 1720 seconds	721 to 1620 seconds

a. Overall system throughput is decreased. Cuvettes next to the test cuvette are left empty to prevent the test cuvette from being washed in the first cycle.

Usable Result Range

Usable result range specifies the analytical range of the reagent. Results are suppressed and flagged as out-of-instrument range low (OIR LO) or out-of-instrument range high (OIR HI), respectively, if these ranges are exceeded.

If any of the Usable Result Range fields are edited, the instrument automatically changes the Reportable Range information from System Setup to the Usable Result Range defined for the UDR. The Reportable Range must be re-entered if the values are different from the Usable Result Range.

Table 10.28 Usable Result Range

	Allowable Entry
Lower Limit	0.000 to 99999.999
Upper Limit	0.000 to 99999.999

Error Detection Limits

Blank (Absorbance or Rate)

Blank specifies the minimum and maximum absorbance or rate (method dependent) for the blank measured during the blank read window. If these values are exceeded, the results are suppressed and flagged as blank absorbance/rate high (BL ABS HI or BL RATE HI) or blank absorbance/rate low (BL ABS LO or BL RATE LO).

Mean deviation is a measure of noise in the read window.

Table 10.29 Allowable Entries for Blank Window

Low Limit	-1.500 to 2.200
High Limit	-1.500 to 2.200
Mean Deviation	0.000 to 2.200

Reaction (Absorbance or Rate)

Reaction specifies the minimum and maximum absorbance or rate (method dependent) measured during the reaction read window.

- For upgoing rate or endpoint reactions, if the reaction absorbance is less than the Low Limit then results are suppressed and flagged as RX ABS LO. Likewise, if the High Limit is exceeded, the result is suppressed and flagged RX ABS HI.
- For downgoing rate methods, the Low Limit indicates the maximum rate observed during the reaction read window.
- For downgoing endpoint methods, the Low Limit indicates the maximum absorbance observed during the reaction read window.

Mean deviation is a measure of noise in the read window.

Table 10.30 Allowable Entries for Reaction

Low Limit	-1.500 to 2.200
High Limit	-1.500 to 2.200
Mean Deviation	0.000 to 2.200

Initial Rate High and Substrate Depletion

The initial rate parameter specifies maximum rate of absorbance change measured within the first cycle after the last component (sample or reagent) is added. When this value is exceeded, results are suppressed and flagged *Initial Rate High* (INIT RATE HI).

The delta absorbance specifies the maximum acceptable difference between the Reaction HIGH ABS, measured just after sample or starter reagent addition, and the final absorbance measured at the end of the reaction read window. When this value is exceeded, results are suppressed and flagged *Substrate Depletion* (SUB DEPL).

Table 10.31 Allowable Entries for Initial Rate and Delta Absorbance

Initial Rate[a]	-99.999 to 99.999
Delta Abs	0.000 to 2.200

a. For downgoing reactions, the initial rate should be a negative number.

Multipoint Spans

Multipoint span limits specify the allowable difference in absorbance or rate between respective multipoint calibrator levels:

- 1 and 2
- 2 and 3
- 3 and 4
- 4 and 5
- 5 and 6
- 6 and 1

Values are only shown for the number of calibrators specified under **No. # of Calibrators**. A change in calibrator number resets the spans to zero (0.000).

The sign (positive or negative) of multipoint spans are dependent upon the direction of change between two successive calibrators. For example, if the response for Cal 2 data < Cal 1 data, the multipoint span must be negative.

Table 10.32 Allowable Entries for Multipoint Span Limits

-1.500 to 2.200

IMPORTANT The system may accept incorrect calibration data if:

- multipoint span values are not entered during UDR setup,
- span values of zero are entered, and/or
- the samples are not loaded correctly during the run.

Wavelength Selection

Introduction

The UniCel DxC provides a selection of ten wavelengths ranging throughout the UV-visible spectral region from which to measure the absorbance of a desired analyte. These are 340, 380, 410, 470, 520, 560, 600, 650, 670, and 700 nm. In order to run a user-defined reagent, two wavelengths are required: the primary or analysis wavelength, and the secondary or reference wavelength.

Primary Wavelength Selection

Knowledge of the spectral curve of the chromophore of interest facilitates proper selection of wavelengths. The primary wavelength is selected based on the maximum absorbance peak obtained using the desired chromophore. The secondary wavelength, which will vary depending on the properties of the chromophore, is used to compensate for variations in the light intensity each time the xenon lamp is flashed. For a detailed description of the principles of flash correction, refer to CHAPTER 2, *Theory of Operation* in the UniCel DxC Synchron Clinical Systems *Reference Manual*.

Secondary Wavelength Selection

To select the optimal secondary wavelength for a given analyte, the following criteria are recommended:

- The secondary wavelength should be as close to the primary wavelength as possible without overlapping the spectral curve of the desired chromophore. The secondary reference wavelength should be near the base of the analytical absorption curve. If the wavelength selected resides on the spectral curve, a loss of sensitivity may result.
- In order to minimize any optical interference due to the presence of another absorption curve, the selection of the secondary wavelength will depend on the location of the other curve in relation to the primary wavelength of the desired chromophore. If the second curve overlaps the primary wavelength, there may be an interference; however, proper selection of the secondary wavelength can function as a "bichromatic" measurement effectively minimizing or eliminating absorbance due to the interfering substance. In this instance, the secondary wavelength should be on the interfering curve at or near a point where the absorbance is at the same level as the crossover absorbance on the primary wavelength. If, however, the second curve does not interfere at the primary wavelength, the secondary wavelength should not be selected within the area encompassed by that curve.

- The shortest distance between the two selected wavelengths (without overlapping the spectral curve) optimizes the flash characteristics of the lamp, providing better precision of the absorbance data. It is strongly recommended that precision and correlation data be accumulated to verify proper selection of the wavelengths as well as all of the defined parameters.

Summary

- A secondary wavelength closer to the primary wavelength reduces noise and increases accuracy.
- Obtaining the maximum absorbance difference increases sensitivity.
- Avoid secondary wavelengths with peak spectral interferences within the primary spectral curve.
- Select a secondary wavelength that produces a net absorbance that is close to the net absorbance of the primary wavelength.

Determination of Extinction Coefficients

Introduction

In general, there are two ways to determine the molar absorptivity or extinction coefficient "e" for a given chemistry at each of the wavelengths required for analysis.

Option 1

Prepare a stock, standard solution of the chromophore. From this stock solution, prepare a working standard solution at the same molar concentration recommended by the reagent manufacturer. Obtain absorbance values on this working standard solution within a narrow-bandpass, manual spectrophotometer which uses 1 cm pathlength cuvettes. Calculate the extinction coefficient for the appropriate wavelength as follows:

$$e = \frac{\text{Absorbance of chromophore}}{\text{Concentration of standard solution (mmol / L)} \times \text{pathlength}}$$

E014427L.PNG

This method may only be used when the chromophore is measurable in a stable form. When the chromophore is not attainable in a stable form and may only be measured in a dynamic state, the second method of determining extinction coefficients is suggested. For additional information, refer to *Textbook of Clinical Chemistry*, Norbert W. Tietz, 1999.

Option 2

Prepare the reagent according to the manufacturer's instructions. With a manual spectrophotometer or automated instrument, obtain the delta absorbance per minute on at least ten replicates of a normal or high normal sample at each of the appropriate wavelengths selected. Average the delta absorbance per minute obtained at each wavelength. The extinction coefficient at the secondary wavelength may be calculated by use of a factor or correction coefficient (R) derived from the ratio of the delta absorbance per minute at the secondary and primary wavelengths. The following formula may be used:

$e_2 = e_1 \times R$

where:

e_2 = Extinction coefficient at the secondary wavelength

e_1 = Extinction coefficient at the primary wavelength [a]

$$R = \frac{\text{Delta absorbance / minute at secondary wavelength}}{\text{Delta absorbance / minute at primary wavelength}}$$

E014428L.PNG

a. The extinction coefficient of the chromophore at the primary wavelength is usually specified by the reagent manufacturer.

Exit Check Criteria

Introduction

When preparing to save a chemistry protocol after editing, the parameters are checked for correctness, completeness, and consistency. Chemistry protocols that fail any Exit Check criteria are not allowed to run. The following requirements specify the Exit Check criteria and parameters presented for modification when the user elects to correct detected protocol errors.

Wavelengths

- The primary wavelength must not be *None*.
- The secondary wavelength must not be *None*.
- The primary wavelength must be different from the secondary wavelength.

Calibration

- The calibration time limit must be greater than zero hours if the number of calibrator levels is greater than zero.
- The sequence of calibrators must be in ascending target value order.
- Calibrator target values must be unique -- no two calibrator levels can have the same analyte target value (setpoint).
- Models 1, 2, 3, 8 & 9 and DAT do not support negative setpoints.

- If the math model is either Model 1 or Model 9, the number of calibrators must be five or six levels only.
- If the math model is Model 2, Model 3, or Model 8, the number of calibrators must be exactly six levels.
- If the math model is DAT, the number of calibrators must be exactly three levels. The middle level defines the cutoff between positive and negative. The lowest and highest levels are used to measure the reagent sensitivity.
- If the math model has been specified as LINEAR, the number of cal levels must be 0, 1 or 2.
- If the math model is DAT, the result units must be mA/min (rate) or mA (absorbance).

Blank

- The reagent blank end time must exceed the reagent blank start time by a minimum of one processing cycle.
- The blank absorbance high limit must be greater than the blank absorbance low limit.
- The rate low limit cannot exceed the high limit for positive reaction direction chemistries.
- The rate low limit must exceed the high limit for negative reaction direction chemistries.

Measurement

- The reaction end-read time must exceed the reaction start-read time by a minimum of one processing cycle.
- The reaction absorbance high limit must be greater than the reaction absorbance low limit.
- The usable result range upper limit must be greater than the usable result range lower limit.

Volumes

- If a reagent injection (first, second and third) specifies a reagent component to be dispensed, component A, B or C is specified, the corresponding dispense volume must be greater than zero. Reagent volumes of 0 µL indicate a volume that is not set.
- The sum of all reagent volumes added prior to the reagent blank read must be greater or equal to 200 µL.
- The sum of sample volume and all reagent volumes must not exceed 330 µL.
- The first, second and third reagent inject components must be from different compartments of the reagent package.
- The first reagent inject must be from a larger reagent compartment than either the second or third reagent inject. The relative capacities of the reagent package compartments are: A > B > C.
- If a single trigger is defined, it should be defined in the third inject column. If it is defined in the second inject column, the system transfers the information to the third inject column upon exit.

User Defined Reagent Removal

Remove a User Defined Reagent

A user defined reagent must be deconfigured from the chemistry menu prior to removal.

1. Remove UDR reagent cartridge from system.
2. Delete UDR information from the following areas:
   - reference ranges
   - calibration assignments
   - sample programming and
   - quality control.
3. Select **Setup** from the menu bar.
4. Select **2 Chem Configuration/Sample Type**.
5. Select the chemistry to be deleted.
6. Select **Delete F6** to remove the UDR from the chemistry menu.
7. Select **Done F10** to return to the System Setup screen.
8. Select **15 User-Defined Chemistries**.
9. Select the number of the chemistry to be deleted.
10. Select **Delete F2**.
11. Select **OK** to delete the chemistry, then select **Done F10** to exit.

Expanded User Defined Chemistry Feature

Introduction

The Expanded User Defined Chemistry (or UDR for User Defined Reagent) feature adds any or all of the following options for up to 10 UDR chemistries:

- Retain calibration data when a cartridge is removed from the instrument.
- ORDAC capability.
- Onboard dilution of samples.
- Selection of 940 nm as the primary wavelength.

The options are enabled when **UDR+ F3** is selected from the Define/Edit User-Defined Chemistry screen. An Expanded UDR chemistry is denoted by a "+" placed in front of the UDR name when viewed in the User-Defined Chemistries screen.

Cal Save

Cal Save allows the calibration parameters to be retained when the cartridge is removed from the instrument. When the cartridge is reloaded within the calibration time limit, recalibration is not required.

Enable/Disable Cal Save

1. The instrument must be in *Standby* or *Stopped* mode.
2. Select **Setup** from the menu bar.
3. Select **15 User Defined Chemistries**.
4. Select the number to be defined.
5. Select **Define F1**.
6. Select **UDR+ F3**.
7. On page 1 of the Chemistry Parameters screen, select the **Cal Save** check box.

ORDAC

ORDAC (Over Range Detection and Correction) allows a sample to be repeated with a smaller sample volume if the first result exceeds the defined usable result range. Just like Beckman Coulter chemistries, ORDAC can be turned on for automatic use through System Setup, or manually requested in the Sample Program.

Enable/Disable UDR ORDAC

1. The instrument must be in *Standby* or *Stopped* mode.
2. Select **Setup** from the menu bar
3. Select **15 User Defined Chemistries**.
4. Select the number to be defined.
5. Select **Define F1**.
6. Select **UDR+ F3**.
7. Go to page 2, Processing Parameters, and type the ORDAC sample volume, 2-40 µL. The volume entered must be smaller than the initial sample volume.
8. Go to page 3, Error Detection, and type the ORDAC Low and High Limit.

On Board Dilution

On Board Dilution allows all samples for the UDR to be diluted prior to analysis. An aliquot of diluent is placed into a cuvette. Then the Sample is dispensed into the diluent and mixed. On the next cycle, the diluted sample is aspirated from the first cuvette and dispensed into another cuvette containing the reagent. The diluent can be either a cartridge of DIL1 (PN 467826) or Component A in the UDR cartridge.

Enable/Disable On Board Dilution

1. The instrument must be in *Standby* or *Stopped* mode.
2. Select **Setup** from the menu bar.

3 Select **15 User-Defined Chemistries**.

4 Select the number to be defined.

5 Select **Define F1**.

6 Select **UDR+ F3**.

7 Go to page 2, Processing Parameters, and select **Dilute F2**. A new window appears.

8 Type the volume of neat sample to use for the dilution, 3-40 µL.

9 Type the volume of diluent to use for the dilution, 140-300 µL. The dilution factor automatically calculates and shows on the screen.

10 Select either check box to define where the diluent will be aspirated from.

- ❑ **UDR Component A** (default)

  OR

- ❑ **DIL1 Cartridge**

11 Select **OK** to return to the Define/Edit User Chemistry screen.

CHAPTER 11

System Reference

Introduction

This chapter describes the intended use, operational conditions, calibration theory, and principle of measurement for the Integrated Workstation. It also describes the system components. Detailed information is located in the UniCel DxC Synchron Clinical Systems *Reference Manual.*

WARNING

If the equipment is used in a manner not specified by Beckman Coulter, Inc., the protection provided by the equipment may be impaired.

Intended Use

The UniCel DxC Integrated Workstation combines a UniCel DxC 600 or UniCel DxC 800 analyzer and a UniCel DxI 600 or UniCel DxI 800 analyzer into a single instrument presentation. Samples are loaded from a single point of entry through a UCTA (UniCel Closed Tube Aliquotter). The UCTA functions as the sample processing manager by aliquotting and routing samples to the DxC and the DxI analyzers according to programming requirements.

The UniCel DxC 600 or DxC 800 Synchron Clinical System is a fully automated, computer-controlled clinical chemistry analyzer intended for the *in vitro* determination of a variety of general chemistries, therapeutic drugs, and other chemistries of clinical interest in biological fluids such as serum, plasma, urine, or cerebrospinal fluid (sample type is chemistry dependent).

The UniCel DxI 600 or DxI 800 Access Immunoassay System is an *in vitro* diagnostic device used for the quantitative, semi-quantitative, and qualitative determination of various analyte concentrations found in human bodily fluids.

Operational Conditions

Shipping Damage

Each DxC Integrated Workstation is carefully examined and checked by Beckman Coulter, Inc. before it is shipped. When you receive your new DxC Integrated Workstation, visually inspect the shipping container for damage. If there is damage, notify the Beckman Coulter Service representative before he or she arrives at your facility to install your system.

If there is no damage to the shipping container, the Beckman Coulter Service representative will supervise the unpacking of your system. If it is damaged in any way, file a complaint with the carrier. If there is no damage, a visual and operational check of your system will be performed.

Installation

Table 11.1 Installation Requirements

Item	Requirement
Installed by	The DxC Integrated Workstation is installed completely by Beckman Coulter
Installation Category	II

Clearances

Table 11.2 System Clearances

Area Affected	Clearance Needed
Sides	Minimum of 18 inches (45.7 cm) clearance, both sides.
Back	Minimum of 14.5 inches (36.8 cm).
Top	Minimum of 22 inches (55.9 cm) from highest point of system.
Front	Minimum of 25 inches (63.5 cm) to open doors.

Sunlight and Drafts

Do not place the system in direct sunlight or in drafts. Both of these conditions may affect the temperature control of the system.

Drain

Liquid waste exits the DxC Integrated Workstation by three separate effluent streams:

Table 11.3 System Waste Disposal

Item	Description
DxC	Waste drain 16 L/hour Maximum drain height of 36 inches (91.4 cm)
UCTA	May be plumbed into existing DxC effluent stream
DxI	Plumbed to DxI Waste Container May be plumbed into existing DxC effluent stream

The DxC System should be located near a sink or floor drain to accommodate the waste effluent at a minimum rate of 16 liters/hour.

The drain must not be placed any higher than 36 inches (91.4 cm) above the floor.

Power Requirements

Table 11.4 Power Requirements – DxC Analytic Instrument

Item	Requirement
Operating range	200-240 VAC ± 10% (180-264 VAC) 14 A at low line, exclusive of power on surge
Frequency	50/60 Hz
BTU generated	10,500 BTU/hour
Power connector	20 A current rating, NEMA L6-20R twistlock in-line connector

Table 11.5 Power Requirements – DxC Console (PC System and Monitor)

Item	Requirement
Operating range	100-120 VAC ± 10% (90-132 VAC); 4A OR 200-240 VAC ± 10% (180-264 VAC); 2A
Frequency	50/60 Hz
BTU generated	1,500 BTU/hour
Power connector	15 A current rating, IEC 320 standard connector

Table 11.6 Power Requirements – UCTA Component

Item	Requirement
Operating range	NAO Market 110-120 VAC, OUS 220-240 VAC
Frequency	50/60 Hz
BTU generated	2900 BTU/hour
Power connector	15A current rating, IEC 320 standard connector

Table 11.7 Power Requirements – Lexmark E350 Printer

Item	Requirement
Operating range	NAO Market 90-135 VAC OUS Market 110-120 VAC, 220-240 VAC
Frequency	55 ± 8 Hz
BTU generated	1775 BTU/hour (printing); 41 BTU/hour (standby); 34 BTU/hour (power save)
Power connector	Standard 3-prong cord; OUS Region specific, requires local sourcing

Table 11.8 Power Requirements – DxI Analytic Instrument

Item	Requirement
Operating range	100-120 VAC ± 10% (90-132 VAC); 7A (nominal) OR 200-240 VAC ± 10% (180-264 VAC); 3.5A (nominal)
Frequency	50/60 Hz
BTU generated	2730 BTU/hour
Power connector	15A current rating, IEC 320 standard connector

Table 11.9 Power Requirements – DxI Console (PC System and Monitor)

Item	Requirement
Operating range	100-120 VAC ± 10% (90-132 VAC); 4A OR 200-240 VAC ± 10% (180-264 VAC); 2A
Frequency	50/60 Hz
BTU generated	1500 BTU/hour
Power connector	15A current rating, IEC 320 standard connector

Notes on the System Power

The system can operate from any standard 3-wire electrical outlet and is wired as shipped from the factory to operate on 220 VAC, 50/60 Hz.

IMPORTANT Line Voltage from the electrical outlet should be free of spikes, fluctuations, and dropouts for protection of the electronic circuitry.

⚠ CAUTION

Only operate the system from a 3-wire power source. DO NOT use a 2-prong adapter or a 2-wire AC power source.

Environmental Conditions

Table 11.10 Working Environment, Temperature, Warm-up Time, Humidity and Elevation

Item	Specification
Working Environment	Indoor use only
Ambient temperature	+18°C to +32°C, ≤ 2°C change in 1/2 an hour
Warm-up time	30 minutes (time to reach operating temperature)
Relative humidity	20-85% relative, non-condensing
Elevation	< 4,200 ft (1280 m) > 4,200 ft (1280 m) altitude modification required

NOTE These specifications apply to the DxC analyzer only. For specifications for the DxI analyzer, refer to the DxI online help.

Water Requirements

Table 11.11 Water Requirements

Item	Specification
Flow Rate	0.6 L/min peak flow rate, 16 L/hr minimum continuous flow rate
Temperature	+15°C to +25°C
Water pressure	30-90 psi.

Table 11.12 Water Quality Requirements

CLSI (CLRW) 4TH Ed. C03 --A4 **Formerly NCCLS (Type I & II)**		
Notes	**Replaces Type I & II.** **4th Ed. C03 --A4**	
	CLSI **CLRW**	Beckman Coulter Requirements
Organic Impurities Total Organic Carbon (TOC)	500 ng/g TOC (Total Organic Carbon) parts perbillion (ppb)	Not Applicable

Table 11.12 Water Quality Requirements *(Continued)*

CLSI (CLRW) 4TH Ed. C03 --A4 **Formerly NCCLS (Type I & II)**		
Notes	**Replaces Type I & II.** **4th Ed. C03 --A4**	
Microbiological Impurities Maximum microbial content colony forming unit (CFU/mL)	10 CFU/mL	10 CFU/mL
Ionic Impurities Minimum resistivity, megohm.centimeter (MΩ .Cm@25C)	10 MΩ .Cm	1.0 MΩ .Cm
Particulate & Colloid Content	Purification process requirement only: water filtration using 0.22 µm pore size to remove microorganisms and particulates	Purification process requirement only: water filtration using 0.22 µm pore size to remove microorganisms and particulates
pH	Not Applicable	Not Appiicable
Maximum silicate (mg/mL) SiO_2	Not Applicable	Not Applicable

UCTA and DxI - None required.

Other System Specifications for IEC-1010 Compliance

Table 11.13 IEC-1010 Specifications

Item	Specification
Pollution Degree	2
EN55011	Meets Class A
Maximum Sound Pressure	≤ 65 dBA with covers down
Maximum Leakage Current	240 V, 50 Hz: 330 µA

Theory of Operation

The entire operating process is described in the following flow chart. When sample preparation and calibration activities are completed, programmed samples are loaded onto the UCTA load tray. Press the **RUN** button on the UCTA to start the testing process.

If an immunoassay sample needs to be tested, the UCTA pierces the cap on the sample tube, aliquots the sample into an SV, and sends it to the DxI analyzer. If a general chemistry sample needs to be tested, the UCTA sends the sample to the DxC analyzer.

You can view the test status from the workstation console while the system is operating. You can generate a test report for both analyzers after testing has been completed. If a test must be rerun, place the sample rack back onto the UCTA load tray to rerun the test.

Figure 11.1 Integrated Workstation System Operating Process

Cartridge Chemistry: Calibration Theory

Introduction

Calibration determines the relationship between measured reaction responses and known concentrations. Calibration factors are derived from this relationship. These factors are used to convert the measured reaction responses to final concentration results.

Calibrated chemistries include endpoint and first-order rate chemistries, drugs, DATs, and specific proteins. Zero-order rate chemistries include enzymes, which are precalibrated and require no routine calibration. Enzyme verification can be performed on some of the enzymes to conform to International Federation of Clinical Chemistry (IFCC) guidelines at +37°C.

Endpoint and First-Order Chemistries

Calibration of endpoint and first-order rate chemistries involve the use of a single-level calibrator solution or a two-level calibrator kit. Each analyte in the calibrator solution has a known concentration value associated with it. With each new lot of calibrator solution, the values are transferred from disk and stored in memory for later use in the calibration procedure.

For most calibrated cartridge chemistries, the system will set calibration factors based on four calibrator replicates per calibrator level. The instrument will determine and discard the highest and lowest of the four replicates. The remaining two values are called the usable calibrator replicates. All four replicates will appear on the report but the average of the two usable replicates is used to determine the calibration factor.

For other chemistries, calibration is based on two calibrator replicates per calibrator level. No replicates are discarded. The average value of the calibrator replicates is used to determine the calibration factor.

Endpoint and First-Order Calibration Formulas

The calibration factor is determined by using one of the following equation sets where reaction and blank are used from the usable replicates.

Table 11.14 Calculation of Calibration Factors for Endpoint and Rate Chemistries

Type	Formula
Nonblanked Endpoint Chemistries	**FOR HIGH CALIBRATOR LEVEL:** Reaction ABS = ABS_{rep1} Reaction ABS = ABS_{rep2} $(ABS_{rep1} + ABS_{rep2}) \times 0.5 = ABS_{avg}(hi)$ **FOR LOW CALIBRATOR LEVEL:** Reaction ABS = ABS_{rep1} Reaction ABS = ABS_{rep2} $(ABS_{rep1} + ABS_{rep2}) \times 0.5 = ABS_{avg}(lo)$ $\text{Cal Factor (Slope)} = \frac{\text{Cal Set Point (hi)} - \text{Cal Set Point (lo)}}{ABS_{avg}(hi) - ABS_{avg}(lo)}$ E014416L.PNG Offset = Cal Set Point (hi) - [Cal Factor × $ABS_{avg}(hi)$] Sample values are calculated by the following equation: (Reaction ABS × Cal Factor) + offset = sample value **IMPORTANT** For single point linear calibration, the low calibrator is a fixed zero point and the offset is equal to zero.
Blanked Endpoint Chemistries	**FOR HIGH CALIBRATOR LEVEL:** (Reaction ABS - Blank ABS) = Delta ABS_{rep1} (Reaction ABS - Blank ABS) = Delta ABS_{rep2} (Delta ABS_{rep1} + Delta ABS_{rep2}) × 0.5 = Delta $ABS_{avg}(hi)$ **FOR LOW CALIBRATOR LEVEL:** (Reaction ABS - Blank ABS) = Delta ABS_{rep1} (Reaction ABS - Blank ABS) = Delta ABS_{rep2} (Delta ABS_{rep1} + Delta ABS_{rep2}) × 0.5 = Delta $ABS_{avg}(lo)$ $\text{Cal Factor (Slope)} = \frac{\text{Cal Set Point (hi)} - \text{Cal Set Point (lo)}}{\text{Delta } ABS_{avg}(hi) - \text{Delta } ABS_{avg}(lo)}$ E014417LPNG Offset = Cal Set Point (hi) - [Cal Factor × Delta $ABS_{avg}(hi)$] Sample values are calculated by the following equation: [(Reaction ABS - Blank ABS) × Cal Factor] + offset = sample value **IMPORTANT** For single point linear calibration, the low calibrator is a fixed zero point and the offset is equal to zero.

Table 11.14 Calculation of Calibration Factors for Endpoint and Rate Chemistries *(Continued)*

Type	Formula
Blanked Endpoint Chemistries (with Volume Correction)	**FOR HIGH CALIBRATOR LEVEL:** $\text{Blank Correction Factor} = \frac{\text{Blank Volume}}{\text{Total Reaction Volume}}$ $= \frac{\text{Volume of Reagent(s) (and Sample) at Blank Read}}{\text{Volume of Total Reagent and Sample at Reaction Read}}$ E007123L.PNG [Reaction ABS - (Blank ABS × Blank Correction Factor)] = Delta ABS_{rep1} [Reaction ABS - (Blank ABS × Blank Correction Factor)] = Delta ABS_{rep2} (Delta ABS_{rep1} + Delta ABS_{rep2}) × 0.5 = Delta ABS_{avg}(hi) **FOR LOW CALIBRATOR LEVEL:** [Reaction ABS - (Blank ABS × Blank Correction Factor)] = Delta ABS_{rep1} [Reaction ABS - (Blank ABS × Blank Correction Factor)] = Delta ABS_{rep2} (Delta ABS_{rep1} + Delta ABS_{rep2}) × 0.5 = Delta ABS_{avg}(lo) $\text{Cal Factor (Slope)} = \frac{\text{Cal Set Point (hi)} - \text{Cal Set Point (lo)}}{\text{Delta } ABS_{avg}\text{(hi)} - \text{Delta } ABS_{avg}\text{(lo)}}$ E014417LPNG Offset = Cal Set Point (hi) - [Cal Factor × Delta ABS_{avg}(hi)] Sample values are calculated by the following equation: [[Reaction ABS - (Blank ABS × Blank Correction Factor)] × Cal Factor] + offset = sample value **IMPORTANT** For single point linear calibration, the low calibrator is a fixed zero point and the offset is equal to zero.

Table 11.14 Calculation of Calibration Factors for Endpoint and Rate Chemistries *(Continued)*

Type	Formula
Nonblanked Rate Chemistries	**FOR HIGH CALIBRATOR LEVEL:** Reaction Rate = $Rate_{rep1}$ Reaction Rate = $Rate_{rep2}$ $(Rate_{rep1} + Rate_{rep2}) \times 0.5 = Rate_{avg}(hi)$ **FOR LOW CALIBRATOR LEVEL:** Reaction Rate = $Rate_{rep1}$ Reaction Rate = $Rate_{rep2}$ $(Rate_{rep1} + Rate_{rep2}) \times 0.5 = Rate_{avg}(lo)$ $\text{Cal Factor (Slope)} = \frac{\text{Cal Set Point (hi)} - \text{Cal Set Point (lo)}}{Rate_{avg}(hi) - Rate_{avg}(lo)}$ E014418L.PNG Offset = Cal Set Point (hi) - [Cal Factor × $Rate_{avg}(hi)$] Sample values are calculated by the following equation: (Reaction Rate × Cal Factor) + offset = sample value **IMPORTANT** For single point linear calibration, the low calibrator is a fixed zero point and the offset is equal to zero.

Table 11.14 Calculation of Calibration Factors for Endpoint and Rate Chemistries *(Continued)*

Type	Formula
Blanked Rate Chemistries	**FOR HIGH CALIBRATOR LEVEL:** (Reaction Rate - Blank Rate) = Delta $Rate_{rep1}$ (Reaction Rate - Blank Rate) = Delta $Rate_{rep2}$ (Delta $Rate_{rep1}$ + Delta $Rate_{rep2}$) × 0.5 = Delta Rate $_{avg}$(hi) **FOR LOW CALIBRATOR LEVEL:** (Reaction Rate - Blank Rate) = Delta $Rate_{rep1}$ (Reaction Rate - Blank Rate) = Delta $Rate_{rep2}$ (Delta $Rate_{rep1}$ + Delta $Rate_{rep2}$) × 0.5 = Delta $Rate_{avg}$(lo) $\text{Cal Factor (Slope)} = \frac{\text{Cal Set Point (hi)} - \text{Cal Set Point (lo)}}{\text{Delta Rate}_{avg}\text{(hi)} - \text{Delta Rate}_{avg}\text{(lo)}}$ E014419L.PNG Offset = Cal Set Point (hi) - [Cal Factor × Delta $Rate_{avg}$(hi)] Sample values are calculated by the following equation: [(Reaction Rate - Blank Rate) × Cal Factor] + offset = sample value **IMPORTANT** For single point linear calibration, the low calibrator is a fixed zero point and the offset is equal to zero.

Table 11.14 Calculation of Calibration Factors for Endpoint and Rate Chemistries *(Continued)*

Type	Formula
Blanked Rate Chemistries (with Volume Correction)	**FOR HIGH CALIBRATOR LEVEL:** $$\text{Blank Correction Factor} = \frac{\text{Blank Volume}}{\text{Total Reaction Volume}} = \frac{\text{Volume of Reagent(s) (and Sample) at Blank Read}}{\text{Volume of Total Reagent and Sample at Reaction Read}}$$ E007123L.PNG [Reaction Rate - (Blank Rate × Blank Correction Factor)] = Delta Rate_{rep1} [Reaction Rate - (Blank Rate × Blank Correction Factor)] = Delta Rate_{rep2} (Delta Rate_{rep1} + Delta Rate_{rep2}) × 0.5 = Delta Rate_{avg}(hi) **FOR LOW CALIBRATOR LEVEL:** [Reaction Rate - (Blank Rate × Blank Correction Factor)] = Delta Rate_{rep1} [Reaction Rate - (Blank Rate × Blank Correction Factor)] = Delta Rate_{rep2} (Delta Rate_{rep1} + Delta Rate_{rep2}) × 0.5 = Delta Rate_{avg}(lo) $$\text{Cal Factor (Slope)} = \frac{\text{Cal Set Point (hi)} - \text{Cal Set Point (lo)}}{\text{Delta Rate}_{avg}\text{(hi)} - \text{Delta Rate}_{avg}\text{(lo)}}$$ E014419L.PNG Offset = Cal Set Point (hi) - [Cal Factor × Delta Rate_{avg}(hi)] Sample values are calculated by the following equation: [[Reaction Rate - (Blank Rate × Blank Correction Factor)] × Cal Factor] + offset = sample value **IMPORTANT** For single point linear calibration, the low calibrator is a fixed zero point and the offset is equal to zero.

Non-Linear Chemistries

Non-linear chemistries include drugs and specific protein assays. Unlike the first-order rate and endpoint chemistries, which exhibit a linear response to increasing concentration, the calibration curves for non-linear chemistries exhibit logarithmic (S-shaped) or other nonlinear relationships. For this reason, curve fitting interpolation techniques are employed to construct the calibration curve.

For some non-linear calibrations, the curve parameters for a reagent lot are calculated during manufacturing. The curve parameters are encoded on a card in bar code form, shipped in the reagent box and loaded onto the system. A single point calibration is then run to adjust for instrument-to-instrument variation. If necessary, the calibration includes the sample diluent (DIL1), used as a blank, that is subtracted from all calibrator or sample responses.

- Multi-point chemistry calibration consists of five or six different levels of calibrators. These chemistries set calibration based on single replicates of each calibrator level.
- Single-point chemistry calibration consists of one or two levels of calibrators. These chemistries set calibration based on two to four replicates of each calibrator level.

Non-Linear Calibration Formulas

The standard curve is determined by use of one of several nonlinear math models. The system uses an iterative technique to calculate the curve parameters. A modified Newton iteration is used to choose values. The best-fitting calibration curve is determined by minimizing the sum of the difference between the observed response and the calculated response of each standard.

The following symbols are used in the math models presented below:

R	=	sample response
Conc	=	standard or sample concentration
R_0	=	calculated response for a zero sample
K_c	=	scale parameter
a, b, c	=	parameters which define the nonlinear elements of the math model

Table 11.15 Math Models for Non-Linear Chemistries

Type	Formula
Model #1	Math Model #1 is the four-parameter log-logit function most commonly used with reagents that use antibodies. $$R = R_0 + K_c \left[\frac{1}{1 + e^{-a-b*\ln(conc)}} \right]$$ E014420L.PNG Sample values are determined using the calculated curve parameters and the math model. Values may be calculated directly as this model can be solved for concentration.
Model #2	Math Model #2 is a five-parameter logit function. $$R = R_0 + K_c \left[\frac{1}{1 + e^{-a-b*\ln(conc) - c(conc)}} \right]$$ E014421L.PNG This function cannot be solved directly for concentration. The instrument uses an iterative method to determine the sample value.
Model #3	Math Model #3 is a five-parameter exponential function. $$R = R_0 + K_c \left[e^{a*\ln(conc) + b*\ln(conc)^2 + c*\ln(conc)^3} \right]$$ E014422L.PNG This function cannot be solved directly for concentration. The instrument uses an iterative method to determine the sample value.
Models #4 through #7	These Models are reserved for future development.
Model #8	Math Model #8 is an alternative to model #2, the five-parameter logit function. $$R = R_0 + K_c \left[\frac{1}{1 + e^{-a-b*\ln(conc)}} \right]^c$$ E014423L.PNG This function cannot be solved directly for concentration. The instrument uses an iterative method to determine the sample value.

Table 11.15 Math Models for Non-Linear Chemistries *(Continued)*

Type	Formula
Model #9	Math Model #9 is an extension to model #1, the four-parameter log-logit function. $R = R_0 + K_c \left[\frac{1}{1 + c * e^{-a-b*\ln(conc)}} \right]$ E014424L.PNG The "c" is allowed to be either +1 or -1. If c = +1, then this is equivalent to model #1. If c = -1, an alternative function is being used. This function cannot be solved directly for concentration. The instrument uses an iterative method to determine the sample value.
Polynomial Exponential (PXP)	$R = b0 + P_n(x)e^{-a*(conc)}$ $P_n(x)$ = Polynomial of degree N E014476L.PNG
Quadratic (POLY2)	$R = b0 + b1*(conc) + b2*(conc)^2$ E014477L.PNG
Lorentz	$R = R_0 + \frac{K_c}{\pi} \{\arctan(c*conc + a) + \frac{\pi}{2}\}$ E014478L.PNG
Double Inflection Model DP4	$R = \frac{K_{c1}}{1 + \frac{a_1}{conc}} + \frac{K_{c2}}{1 + \frac{a_2}{conc}}$ E011537L.PNG

Drugs of Abuse Testing (DAT) Chemistries

The Drugs of Abuse Testing (DAT) assays require three levels of calibrators. The calibration measures the separation between calibrators to measure reagent integrity. The calibration factor generated is non-functional for sample result calculation.

The cutoff value for each DAT chemistry represents the mean reaction rate of the low calibrator, reported in mA/min units on patient and control reports. The reaction rate of the samples is compared to the reaction rate of the low (cutoff) calibrator and reported out as POSITIVE or NEGATIVE. Cutoff values are stored in memory until the next successful calibration.

Enzyme Verification

Enzyme verification is a means of adjusting enzyme chemistry reporting units to IFCC/DGKCh methods. This feature is available for ALP, ALT-, AST-, CHE, CK-, GGT and LD. Verification also allows results to be adjusted for country specific correlation needs.

Verification is similar to calibration except that normalization factors are applied to the sample result in the form of a slope and offset adjustment, whereas calibration factors would be applied to the reaction response.

Modular Chemistry: Calibration Theory

Calibration Theory

Modular chemistries are calibrated using two to three levels of calibrator (chemistry dependent). Four replicates per level are assayed. Data from two middle replicates of each level is used to set the system response. The highest and lowest replicates are discarded. Error checks are performed on the two middle replicates to verify successful calibration.

Calibration Error Detection

The analog signals generated by the calibrator measurements are converted to digital form. The resulting ADC values are compared to pre-programmed back-to-back, span and range limits to determine the calibration acceptability.

DxI Immunoassay Calibration Theory

See the DxI online help for a complete description of DxI immunoassay calibration theory.

Cartridge Chemistry: Principles of Measurement

Spectrophotometric Methods

Spectrophotometric methods rely on the principle that a sample, such as a patient sample, a control, or a calibrator, when mixed with one or more appropriate chemical reagents, produces a substance that has the ability to absorb light at specific wavelengths. This substance is referred to as a *chromophore*.

Beer's Law

According to Beer's Law, the amount of light absorbed by the chromophore is proportional to the concentration of the constituent being measured. The system can measure this as an endpoint or a rate of formation.

$$A = abc$$

where

A	=	absorbance of the chromophore
a	=	absorptivity of the absorbing substance at the specific measuring wavelength(s)
b	=	cuvette light pathlength (cm)
c	=	constituent concentration (M)

System Component Reference

DxC Systems

A UniCel DxC System can be divided into the following components:

- Sample Handling Components
- Modular Chemistry System
- Cartridge Chemistry Reagent Handling System
- Hydropneumatic System
- Operation and Control Components
- Large Particle Immuno Assay Module (LPIA)*
- Closed Tube Sampling (CTS)

* Equivalent to Near Infrared Particle Immuno Assay (NIPIA).

Figure 11.2 UniCel DxC Analyzer (DxC 800 shown)

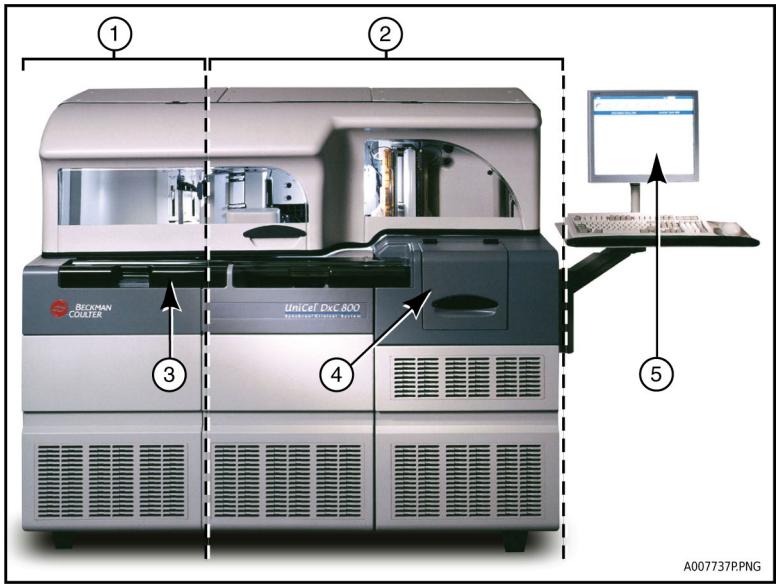

1. Modular Chemistry (MC) Section
2. Cartridge Chemistry (CC) Portion
3. DxC Load Area
4. Dual Reagent Carousel
5. Workstation console

Sample Handling Components

Introduction

The DxC Sample Handling components used in the Integrated Workstation include:

- Bar code reader
- Cap piercer assembly
- Sample Carousel
- Sample probe/mixer assemblies

The sample handling module provides samples for analysis, and provides temporary storage of completed samples. A detailed description of each component is presented in the following paragraphs.

DxC Bar Code Reader (Sample)

⚠ CAUTION

Do not tamper with or remove the housing of the Sample Bar Code Reader.

The Bar Code Reader is a Class II fixed-beam laser scanner. It is used to read the rack bar code, the sample bar code, and the background bar codes as the rack travels past. The rack bar code and sample bar code are used to identify the sample and link it to the appropriate sample programming.

There are two background bar codes that are used to determine whether a rack position is empty or occupied, and if occupied, whether the sample is in a cup or tube.

Refer to Documentation Symbols in the Symbols and Labels section, for a description of the CAUTION labels for the bar code reader.

1-Blade Thick CTS (Closed Tube Sampling) or 1-Blade Narrow CTS Cap Piercer Assembly

⚠ CAUTION

This Cap Piercer contains a razor sharp blade assembly.

⚠ CAUTION

To avoid damage to the blade, do NOT use this Cap Piercer assembly with foil-capped tubes.

The 1-Blade Thick CTS or 1-Blade Narrow CTS Cap Piercer assembly pierces capped tubes allowing the sample probe access to the sample without the need for cap removal. Tubes with caps must be loaded in racks that have had the size correctly defined. Both open and closed tubes can be in the same sample tube rack.

Table 11.16 Tubes Validated for Closed Tube Sampling

Cap Piercer Configuration	Tube Type	Tube Size
1-Blade Thick CTS	Becton Dickinson VACUTAINER with HEMOGARD[a]	13 x 75 mm 13 x 100 mm 16 x 100 mm
	Greiner VACUETTE[b]	13 x 75 mm 13 x 100 mm
1-Blade Narrow CTS	Sarstedt S-Monovette[c]	75 x 15 mm[d] 92 x 15 mm

a. Registered trademark of the Becton Dickinson Corporation.
b. Registered trademark of the Greiner Corporation.
c. Registered trademark of the Sarstedt Corporation.
d. This tube requires a special 5.5 mL rack (PN A18642).

Refer to Documentation Symbols in the Symbols and Labels section, for a description of the CAUTION labels for the Cap Piercer.

Enable/Disable CTS

To enable or disable the CTS:

1. Select **Setup** from the menu bar.
2. Select **17 Reserved Rack Setup** from the System Setup screen.
3. Select **Cap Piercer** to enable the CTS, or deselect it to disable the CTS.

   NOTE The UCTA Piercer Probes [see UCTA (UniCel Closed Tube Aliquotter)] cannot be disabled.
4. Select **OK** to return to the System Setup screen.

Sample Carousel

The ten-rack position Sample Carousel is a motor-driven turntable. Refer to Figure 11.3. Under normal operation, eight of the Sample Carousel positions are available for routine processing and two positions are reserved for priority racks.

Figure 11.3 Sample Carousel Area

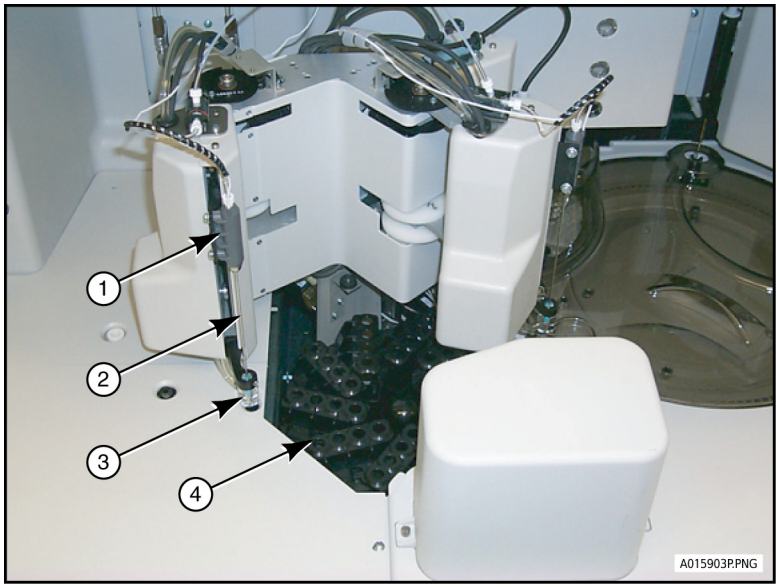

1. Liquid Level Sense Assembly
2. Sample Probe (MC)
3. Collar Wash
4. Sample Carousel

Modular Chemistry (MC) System

Introduction

The Modular Chemistry system consists of the following major assemblies:

- Reagent storage area
- Ratio pump
- Sample probe
- Electrolyte injection cup (EIC)
- Flow cell assembly
- Chemistry reaction modules

A detailed description of each component is presented in the following paragraphs.

Reagent Storage Area

The reagent containers used to supply the modular chemistries are located behind the left front door of the system. The only exception is the CO_2 alkaline buffer which is located on the ISE module.

Figure 11.4 Modular Chemistry Reagent Storage Area (DxC 800 shown)

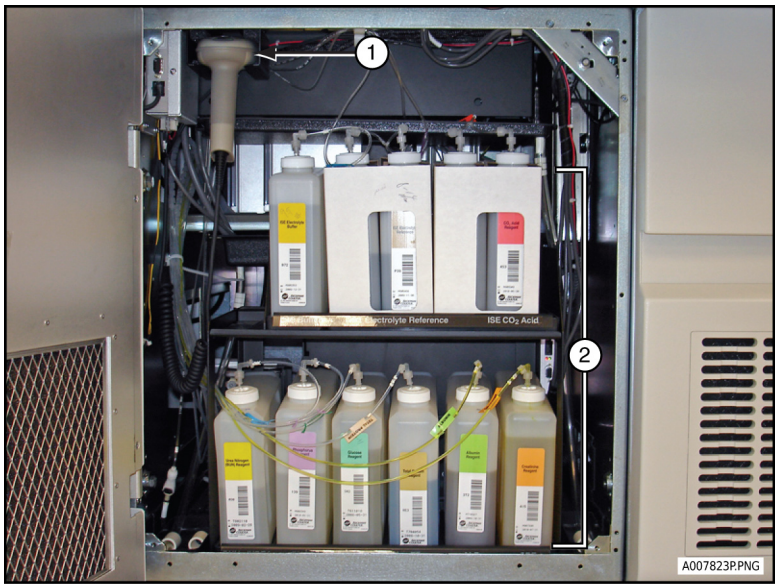

1. Bar Code Reader (hand held)
2. Reagent Storage Area

Reagent Bar Code Reader (Modular)

Behind the left side door of the DxC there is a hand-held bar code reader. Refer to Figure 11.4.

When this reader is held up to the label of one of the modular reagents and the trigger is pressed, the identity of the reagent, the lot number and reagent volume are automatically entered into the reagent load screen.

Ratio Pump

The Ratio Pump is a motor-driven, multicylinder, positive-displacement pump used to deliver the necessary reagents to the ISE flow cell. Refer to Figure 11.5. It consists of a three-step piston housed in three, stacked, independent cylinders.

Figure 11.5 DxC Ratio Pump

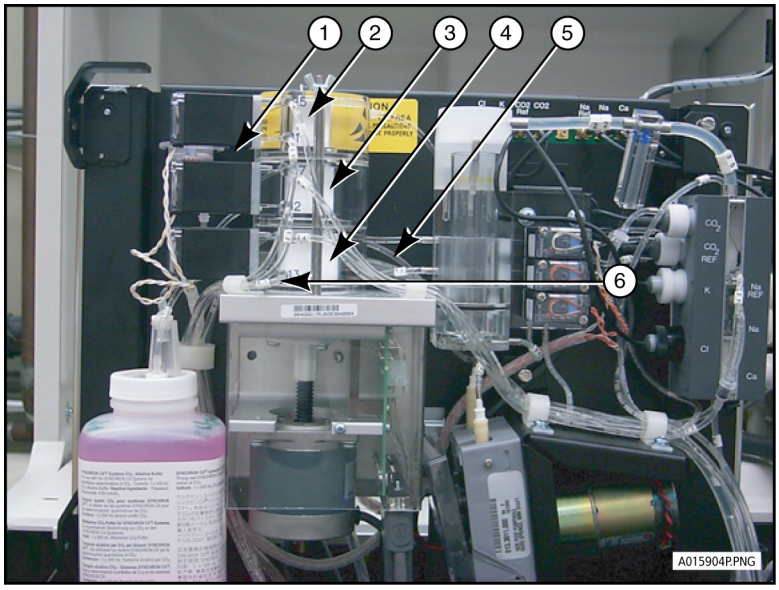

1. Solenoid Valve (example)
2. Cylinder 1
3. Cylinder 2
4. Cylinder 3
5. Outlet Line (example)
6. Inlet Line (example)

Electrolyte Injection Cup (EIC)

The EIC mixes the sample and buffer prior to delivery of the sample (now diluted) to the flow cell.

Figure 11.6 Electrolyte Injection Cup

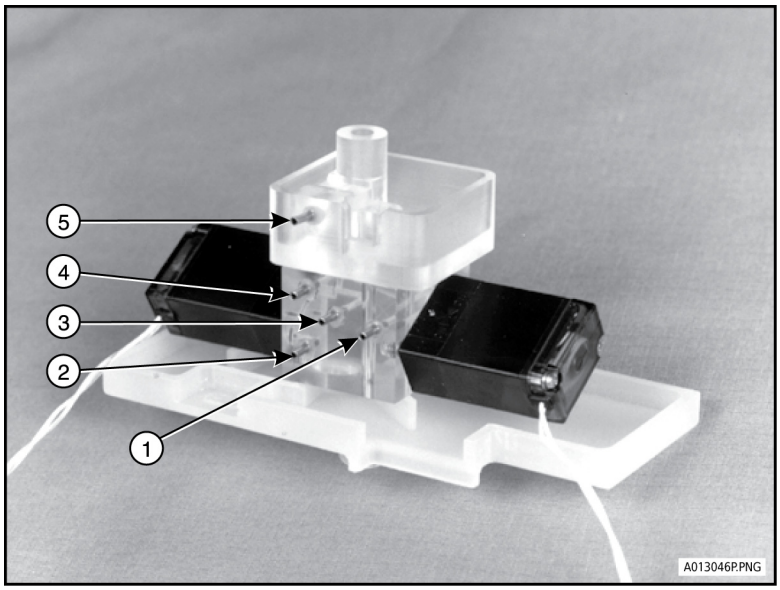

1. Waste Outlet
2. Flow Cell Outlet
3. Buffer Inlet
4. Reference Inlet
5. DI H_2O Inlet

Flow Cell Assembly

The flow cell assembly houses the seven electrodes that perform the analysis of sodium, potassium, chloride, carbon dioxide, and calcium.

Figure 11.7 Flow Cell

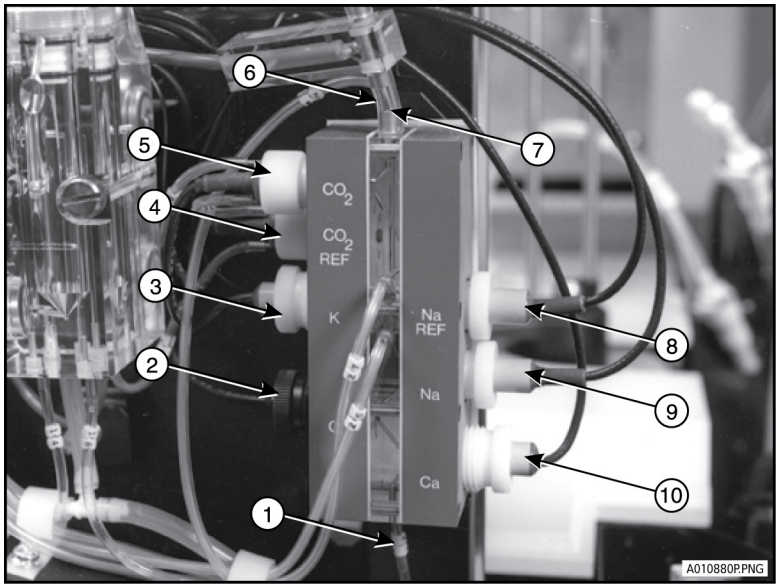

1. Inlet Port
2. CL Electrode
3. K Electrode
4. CO_2 Reference Electrode
5. CO_2 Electrode
6. Exit Port for Waste (large tube)
7. Exit Port for Internal reference
8. Na Reference Electrode
9. Na Electrode
10. Ca Electrode

Chemistry Reaction Modules (Basic Components)

Each of the six Chemistry Reaction Modules have similarities in their design. These common elements are described below. Refer to Figure 11.8. Unique design elements of the modules are described under the specific module headings later in this section.

Figure 11.8 Basic Components of Modules (Ex: Glucose)

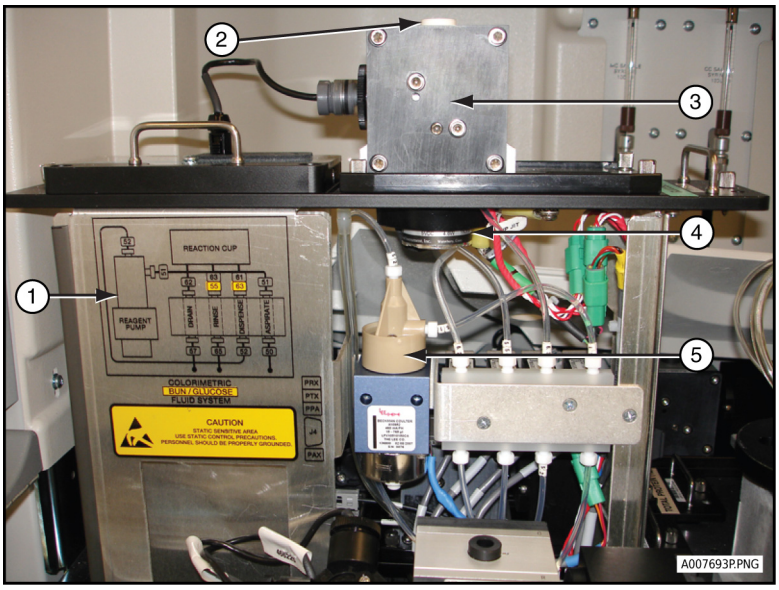

1. Circuit Board (behind protective shield)
2. Reaction Cup
3. Reaction Cup Housing
4. Mixer Motor Assembly
5. Reagent Pump Assembly

Cartridge Chemistry (CC) Reagent Handling System

Introduction

The Cartridge Chemistry Reagent Handling system is composed of the following components:

- Reagent cartridges
- Reagent carousel
- Reagent probe assemblies
- Reagent mixer assembly
- Mixer wash cup

The Reagent Handling system is used to transfer reagent from the individual cartridges to the reaction cuvettes for processing and analysis of the requested chemistry tests.

Reagent Cartridges

Reagent cartridges are single use, recyclable plastic containers that house the individual liquid reagent components necessary to perform a chemistry test. The reagent carousel is capable of storing 59 cartridges on board.

Figure 11.9 CC Reagent Cartridge

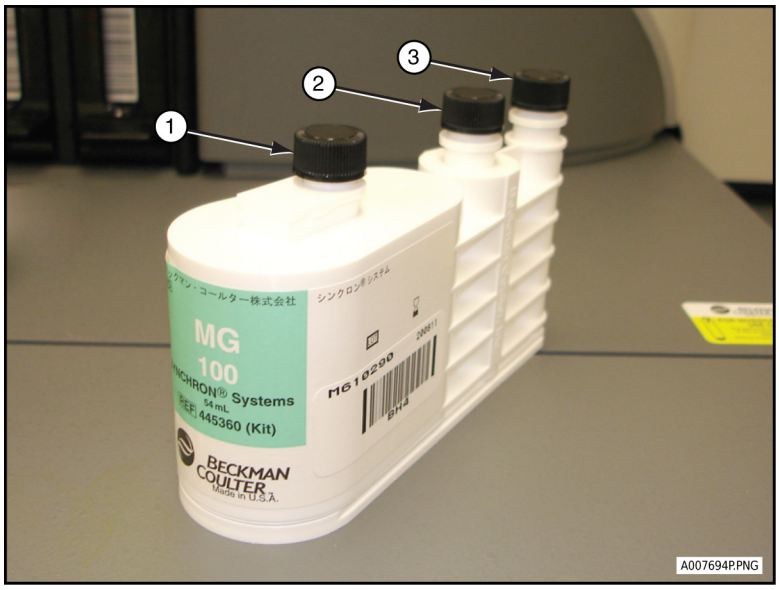

1. A Compartment
2. B Compartment
3. C Compartment

Reagent Carousel and Reagent Bar Code Readers

The Reagent Carousel Compartment provides an on-instrument storage area for the individual reagent cartridges. A total of 59 reagent cartridges can be stored in the carousel at one time. Refer to Figure 11.10.

The storage compartment is refrigerated and fan-cooled to maintain a temperature of +5°C (±3°C).

The Bar Code Reader, (refer to Figure 11.10), situated near the front of the Cartridge Chemistry reagent access door, scans each label during the loading of reagent cartridges. Only the reader for the selected carousel is active. An audible signal acknowledges successful reading of the label.

Figure 11.10 CC Dual Carousels with Two Bar Code Readers

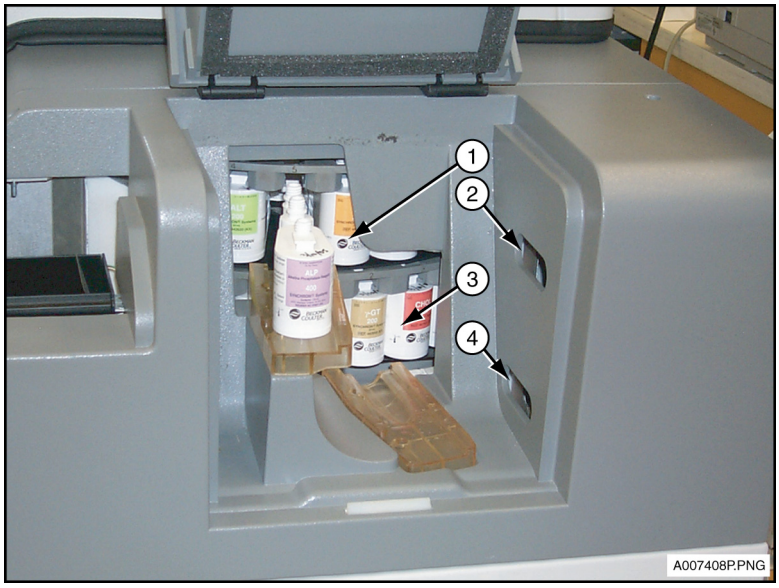

1. Top Positions 31-59
2. Top Bar Code Reader
3. Bottom Positions 1-30
4. Bottom Bar Code Reader

Reagent Probe Assembly

The Reagent Probe assembly consists of a mechanical structure that supports two moveable cranes. Attached to each crane is a pickup probe. Refer to Figure 11.11.

Figure 11.11 CC Reagent Probe Area

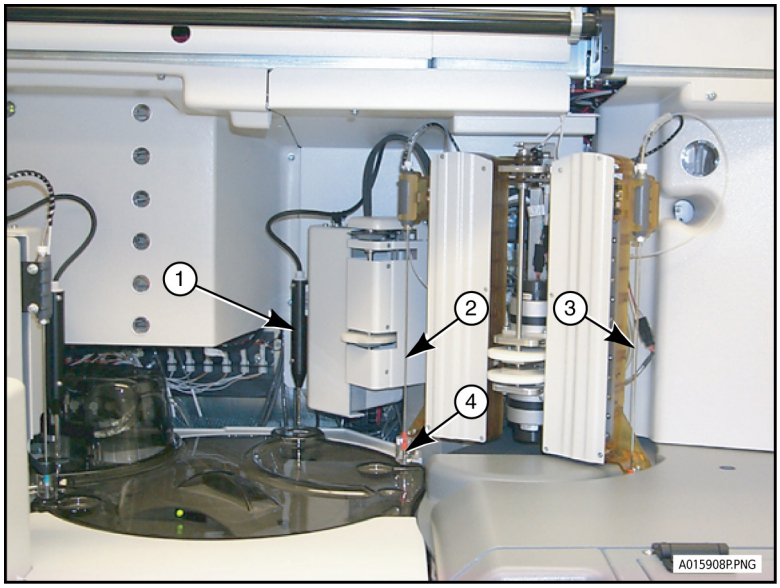

1. Reagent Mixer
2. CC Reagent Probe A
3. CC Reagent Probe B
4. Collar Wash

Reagent Mixer Assembly

This assembly consists of a mechanical structure that supports a single, moveable crane. Attached to the crane is a high-speed mixer. Refer to Figure 11.11.

Reagent Mixer Wash Cup

The Mixer Wash Cup sprays the mixer with diluted wash solution while the mixer moves up and down in the cup.

Cuvette Reaction System

Introduction

The Cuvette Reaction system consists of the following components:

- Reaction carousel assembly
- Photometer assembly
- LPIA (Large Particle Immuno Assay) or NIPIA (Near-Infrared Particle Immuno Assay) module
- Cuvette wash station

The Cuvette Reaction system involves the process of obtaining absorbance readings from each cuvette during the analysis cycle.

Following the completion of each chemistry test, the cuvettes are processed through a wash station in preparation for the next chemistry.

A description of each component is presented in the following paragraphs.

Reaction Carousel

The reaction carousel assembly, (refer to Figure 11.12), supports a total of 125 cuvettes. Each cuvette is glass with a 0.5 cm path length and is approximately 30 mm high. The cuvettes are non-disposable and have an indefinite life-span on the instrument. Cuvettes only need replacement if they are damaged.

Figure 11.12 Reaction Carousel Area (Cover Removed)

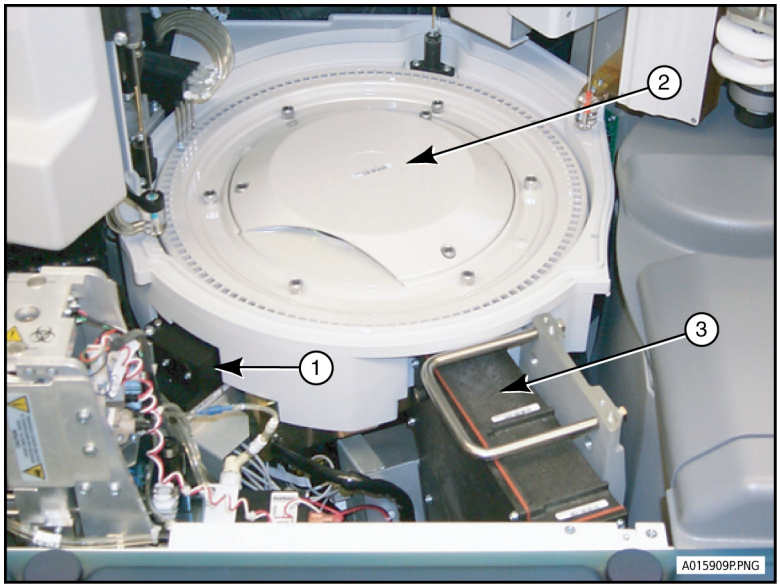

1. LPIA Module
2. Reaction Carousel
3. Photometer

Photometer Assembly

Attached to the reaction carousel support frame is the Photometer assembly. This consists of a xenon pulse lamp, a discrete 10-position silicon-diode detector array, a monochromator housing unit, and associated electronic circuitry. Refer to Figure 11.12.

As each cuvette passes through this optics station during a spin cycle, the xenon lamp is flashed and the resulting light beam travels through the opposing sides of the square cuvette.

LPIA (Large Particle Immuno Assay)

The LPIA module uses a photometric detection system for large particle immuno assays. This assembly is attached to the reaction carousel support frame to the left of the photometer assembly, near the sample carousel. Refer to Figure 11.12. It has two printed circuit boards, an LED (light-emitting diode) and a photodetector. Communication with the system software is through fiber optic cables.

Cuvette Wash Station

The Cuvette Wash Station, (refer to Figure 11.13), consists of four coaxial probes, an elevator assembly, and the associated tubing.

A motor controls the vertical motion required by the elevator to raise and lower the probes during the wash stage.

Figure 11.13 Cuvette Wash Station

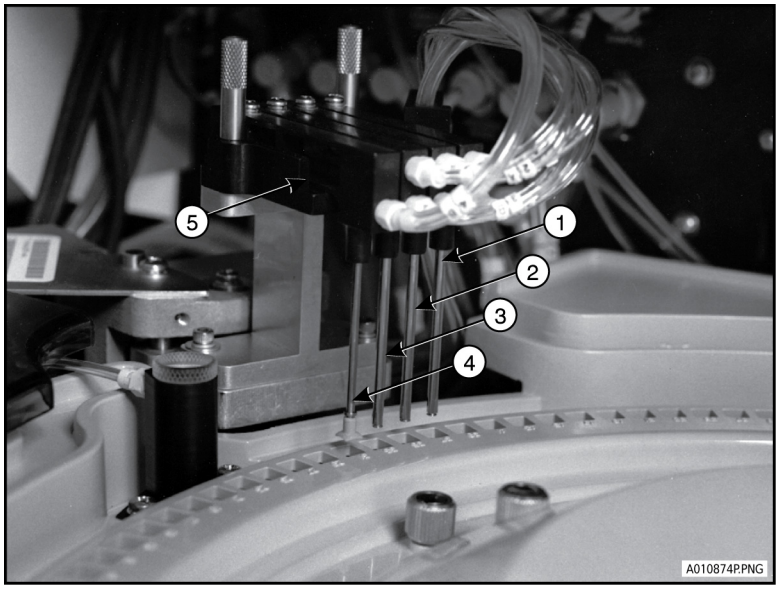

1. Probe #1
2. Probe #2
3. Probe #3
4. Probe #4
5. Wash Station

Hydropneumatic System

Introduction

The main components of the Hydropneumatic System are mounted on a slide-out drawer that allows for easier operator access. Refer to Figure 11.14 and Figure 11.15. When fully extended, the drawer locks open. To close, push in the metal tabs, located on each side of the bottom runner of the hydropneumatic unit, and push the drawer inward.

NOTE No Foam reagent canister may be white or black.

Figure 11.14 DxC 800 Hydropneumatics (right side)

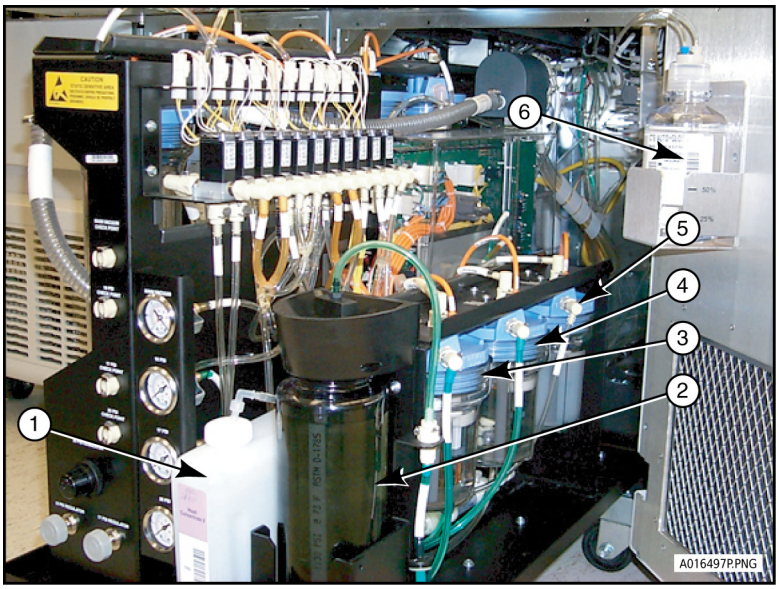

1. Wash Concentrate II Solution
2. No Foam Reagent Canister
3. DI Water Canister
4. Wash Solution Canister
5. Wash Concentrate Reservoir
6. Auto-Gloss

Function

The function of the hydropneumatic system is to provide the following media to the different functional areas of the instrument:

- Vacuum
- Compressed air
- Diluted wash solution
- Deionized water

Figure 11.15 DxC 800 Hydropneumatics (left side)

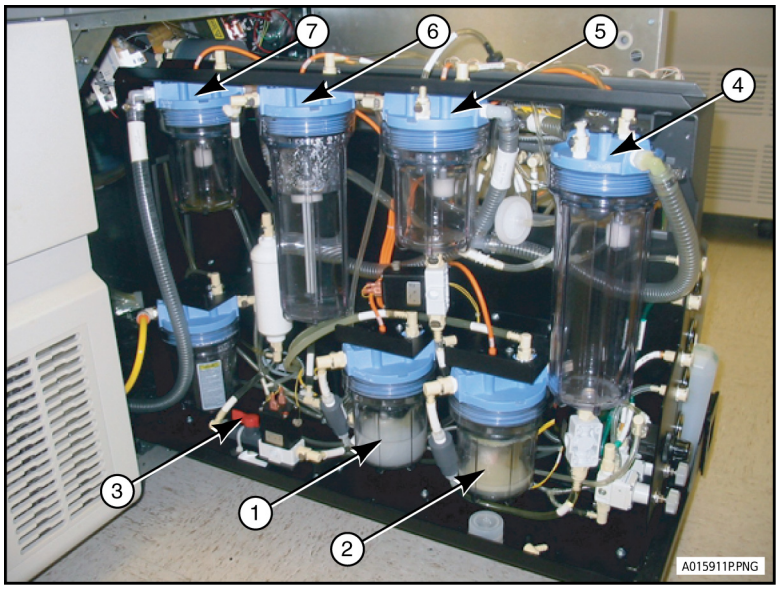

1. Waste B Exit Sump
2. Waste Exit Sump
3. DI Water Inlet On/Off
4. Waste Sump
5. Waste B Sump
6. DI Water Reservoir
7. Vacuum Accumulator

UCTA (UniCel Closed Tube Aliquotter)

As shown in Figure 11.16, you load sample racks onto the UCTA load tray after you complete programming functions. Press the RUN button (1) to begin the test process. The UCTA load pusher moves the sample racks towards the UCTA shuttle. The shuttle sends each sample rack past the UCTA bar code reader and into the UCTA sample carousel.

Figure 11.16 UCTA

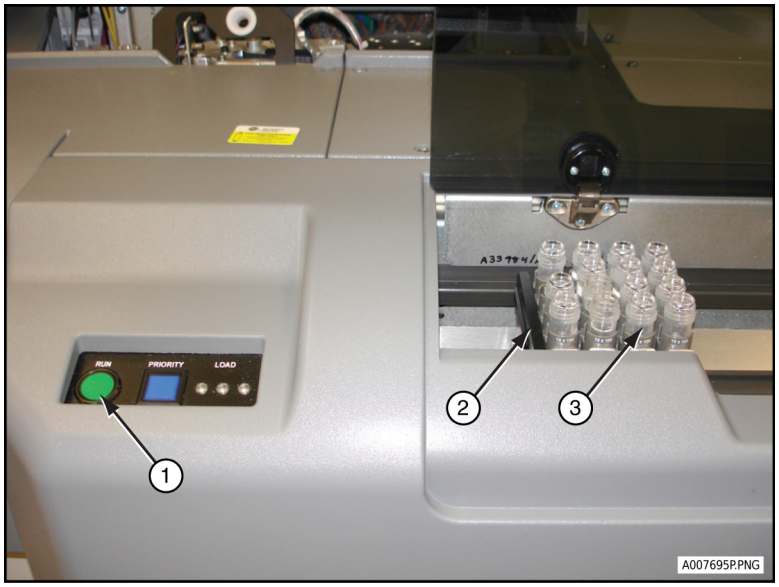

1. RUN Button
2. Load Gate
3. Sample Rack

If the sample needs to be tested at the DxI analyzer, one of the piercer probes (2) in Figure 11.17 is lubricated with an Auto-Gloss solution and pierces into the sample tube cap. One of the aliquot probes (1) then aspirates the sample.

Figure 11.17 Sample Aliquotting Area

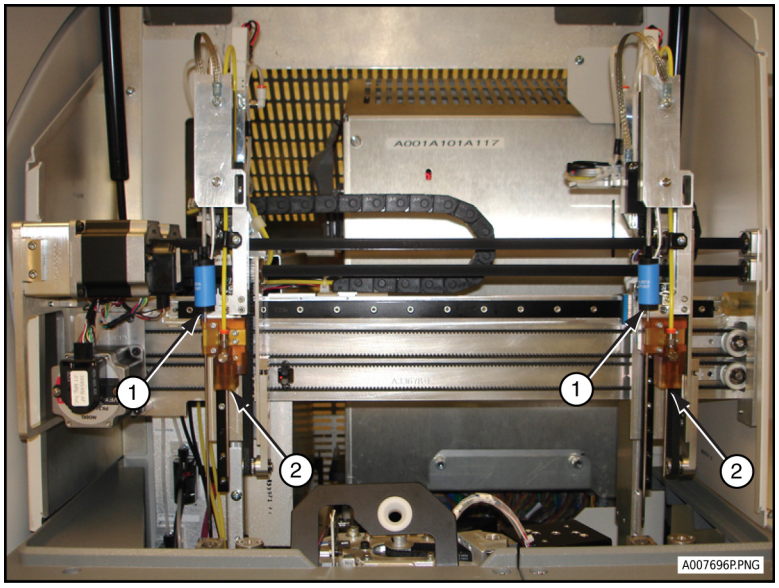

1. UCTA Aliquot Probes
2. UCTA Piercer Probes

The aliquot probe places the sample into a sample vessel in the SV shuttle (1) in Figure 11.18. The cap piercer probe and aliquot probe are cleaned with a wash buffer.

The SV shuttle moves the SV back to the UCTA PnP (Pick and Place) (2). The UCTA PnP transfers the sample SV to the SV nest (3). The UCTA transfer shuttle moves into position and the UCTA PnP moves the sample SV from the SV nest to the transfer shuttle.

Figure 11.18 UCTA Interior

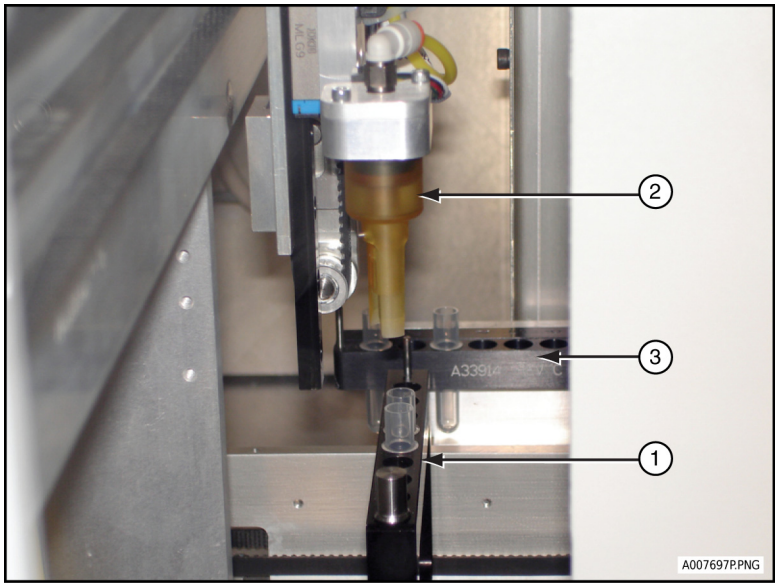

1. SV Shuttle
2. UCTA Pick and Place
3. SV Nest

In Figure 11.19, the transfer shuttle moves the SV to the DxI Dual Gantry PnP (1). The DxI Dual Gantry PnP moves the SV to DxI Sample Storage (2) for processing.

Figure 11.19 DxI Transfer Area

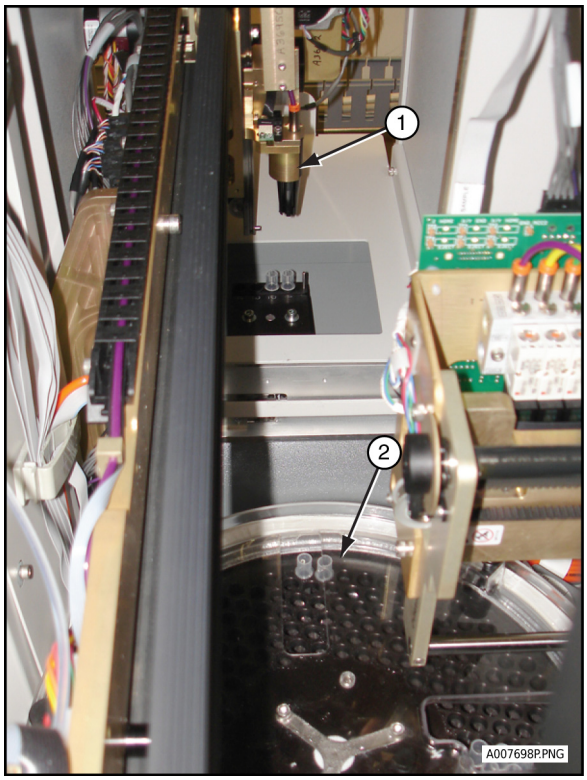

1. DxI Dual Gantry Pick and Place
2. DxI Sample Storage

If the sample needs to be tested at the DxC analyzer, the sample rack enters the DxC load area. The DxC load pusher moves the sample racks toward the DxC shuttle. The shuttle sends each sample rack past the DxC bar code reader and into the DxC sample carousel.

NOTE DxI hardware components and functions are described in the DxI online help.

Operator Control Devices

During normal operation, the operator uses various control devices such as the keyboard, a touch-screen monitor, and mouse. Basic operating functions for both analyzers are controlled and reviewed from the workstation monitor and keyboard. Calibration and maintenance functions are controlled from Integrated Workstation and DxI monitors and keyboards. Information is selected and entered into the system through touch screen monitors, with a mouse, or at a keyboard. Refer to Figure 11.20 and Figure 11.21.

Figure 11.20 Workstation Keyboard and Monitor

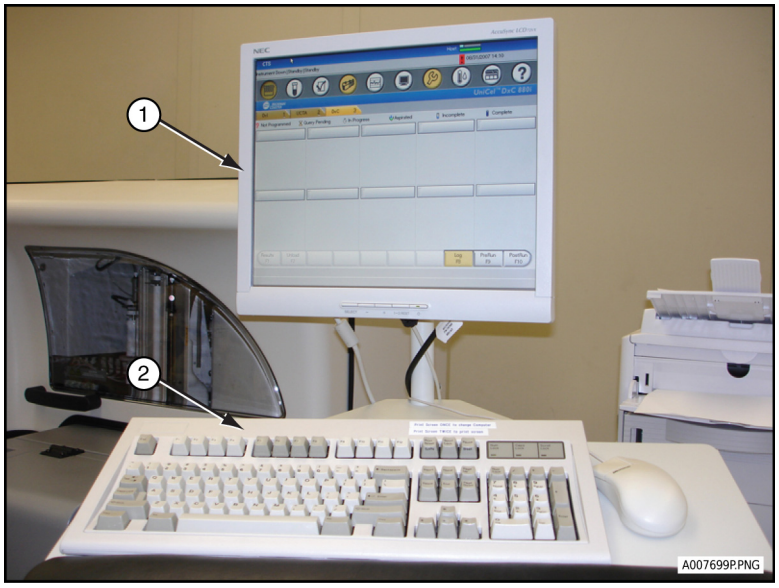

1. Workstation Monitor
2. Keyboard

Figure 11.21 DxI Keyboard and Monitor

1. DxI Monitor
2. Keyboard

Control Buttons

Control buttons are used to start the test process, to prioritize a sample run, or to stop the process under certain conditions as described in Table 11.17 through Table 11.19.

Table 11.17 DxC Control Buttons

Control Type	Location, Function, and Usage
Run (hard wired button)	• Located in front of DxC System, but covered during routine operation. • Starts test process at DxC analyzer for independent operating mode.
Priority (hard wired button)	• Located in front of DxC System, but covered during routine operation. • Loads priority (STAT) samples onto the DxC analyzer for independent operating mode.
Stop (hard wired button)	• Located in front of DxC System. • Stops the test process at DxC analyzer. • Used in maintenance/repair procedures at DxC.
Pause (software button)	• Located under the Instrument Commands icon. • Prevents new or additional tests from starting at DxC System without wasting sample or reagent. Any tests with reagent already added are completed. • Used to interrupt the DxC System when a rack needs to be removed from the sample carousel.

Table 11.18 UCTA Control Buttons

Control Type	Location, Function, and Usage
Run (hard wired button)	• Located in front of UCTA. • Starts the test process at Integrated Workstation System.
Priority (hard wired button)	• Located in front of UCTA. • Loads priority (STAT) samples at the Integrated Workstation System.
Stop (hard wired button)	• Located in front of UCTA. • Stops the UCTA from routing and/or aliquotting samples. • Used in maintenance/repair procedures at UCTA.
Pause (software button)	• Located under the Instrument Commands icon. • Prevents UCTA from aliquotting additional samples.

Table 11.19 DxI Control Buttons

Control Type	Location, Function, and Usage
Stop (software button)	• Located on every DxI screen. • Stops the test process at DxI analyzer. If the STOP button is pressed, sample processing may not stop immediately because another process is in control of the system. If this is the case, a message appears on the DxI monitor to notify the operator. If required, press the **STOP** button again to stop sample processing.
Pause (software button)	• Located on every DxI screen. • Interrupts the DxI analyzer at the next opportunity. In-process tests are completed. • Use to add or delete test requests without initializing the system. • System goes into *Not Ready* mode.
Resume (software button)	• Located on every DxI screen. • Starts the test process at DxI analyzer. • Use when the system has been Paused.
 (software button)	• Located on every DxI screen. • Displays the UCTA/DxC Status dialog box, which shows the UCTA and DxC software versions and communication status to the DxI. • If either system is unavailable, you must take action to re-establish communication.

Rack ID Labels

Sheets of bar-coded rack ID labels are supplied with the system. Apply as shown in Figure 11.22.

Figure 11.22 Rack

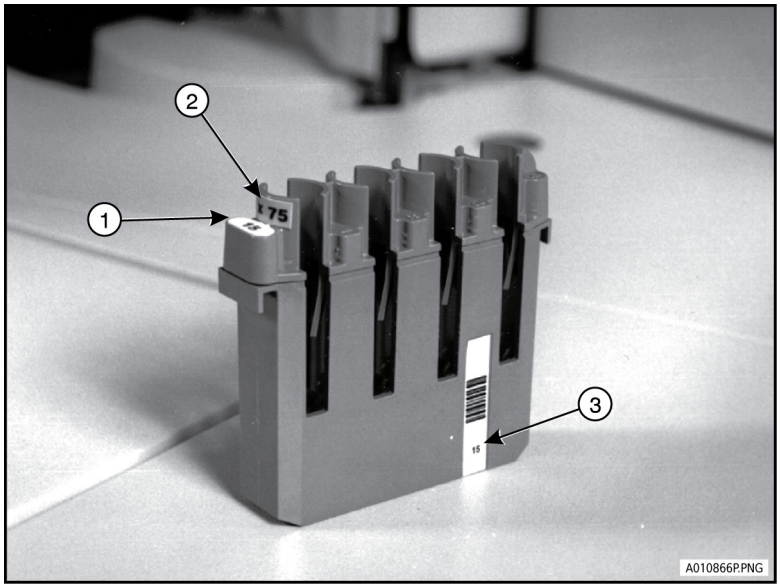

1. Numeric Rack ID Number
2. Rack Size (pre-printed)
3. Bar Coded Rack ID Label

System Monitoring

The system can be monitored to check system operating conditions, sample test status, test errors, and assay flags. A printed test report is automatically generated after testing.

Test Result Errors

The system checks test results against chemistry reaction flag limits. It checks against the final results and on interim reaction data for all samples, including calibrators. Any calibrator, sample result, or reaction step outside of these limits is flagged. Test result errors and codes that affect the chemistry results are described in the UniCel DxC Synchron Clinical Systems *Reference Manual* and the DxI *Immunoassay System Reference Manual*.

Error Codes

A list of the most common error codes you may see during normal operation are located in Common Error Messages and Corrective Actions in this manual. For additional event codes, refer to the UniCel DxC Synchron Clinical Systems *Reference Manual*.

Table 11.20 UCTA Results Errors

Description	Remarks	Result
Rack(s) have been offloaded by user.	USER OFFLOADED	incomplete
UCTA connection to DxI is down.	LINE DOWN	incomplete
Versions for APF (DxI) and AAF (DxC) do not match	AAF/APF MISMATCH	incomplete
Sample was rejected by DxI.	SAMPLE REJECTED	incomplete

DxI Codes Converted to DxC Codes for Integrated Workstation Reporting

Certain DxI codes (flags) are converted to DxC codes. This information is noted on the Integrated Workstation report. Refer to Table 11.21 for details.

Table 11.21 DxI Codes Converted to DxC Codes

DxI			DxC			
Description	**Value**	**Flag**	**Remarks**	**Inst Code**	**Result**	**Host Code**
Normal result	**result**	**none**	**none**	**none**	**print result**	**none**
Indeterminate	**"No value"**	**IND**	INDETERMINATE	**none**	**suppress**	**RE**
Out of range high	**>highest**	**OVR**	**none**	**none**	**print: >X**	**GT**
Curve expired	**result**	**CEX**	**none**	**E**	**print result**	**none**
Substrate expired	**result**	**EXS**	**none**	**S**	**print result**	**none**
Lot expired	**result**	**LEX**	**none**	**R**	**print result**	**none**

Table 11.21 DxI Codes Converted to DxC Codes *(Continued)*

DxI			DxC			
Description	**Value**	**Flag**	**Remarks**	**Inst Code**	**Result**	**Host Code**
Lower than reportable result	**result**	**LOW**	OIR LO	**none**	**print result**	LO
	< lowest	**none**	**none**	**none**	**print: < X**	**LT**
No curve – cal required	**"No value"**	**NCR**	CHEM NEEDS CAL	**NA**[a]	**incomplete**	**NA**
Pack expired	**result**	**PEX**	**none**	**D**	**print result**	**none**
Quantity not sufficient	**"No value"**	**QNS**	NO SAMP DETECT	**NA**	**incomplete**	**NA**
Air bubble detected in substrate	“No value”	QSB	SUBSTRATE BUBBLE	NA	incomplete	NA
Insufficient reagent or sample dispensed	“No value”	QSD	INSUFF FLUID DISP	NA	incomplete	NA
Insufficient sample aspirated	“No value”	QSS	INSUFF SAMP ASP	NA	incomplete	NA
Reflex test	**NA**	**RFX**	**NA**	**NA**	**NA**	**NA**
RLU is out of measuring range	**"Cancelled"**	**RLU**	**RLU RANGE**	**none**	**suppress**	**OR**
Instrument error	**NA**	**SYS**	**DEVICE ERROR**	**NA**	**incomplete**	**NA**
Incubator temperature error	**"No value"**	**TRI**	INCUBATOR TEMP	**none**	**suppress**	**TM**
Reagent temperature error	result	TRR	REAGENT TEMP	none	print result	TM
Substrate temperature error	**"No value"**	**TRS**	SUBSTRATE TEMP	**none**	**suppress**	**TM**
More than 3 hours have elapsed since the sample was created at the UCTA	**NA**	**AEX**	**SV EXPIRED**	**NA**	**incomplete**	**NA**
Can’t run test on DxI	**NA**	**other**	**CHEM NOT RUN**	**NA**	**incomplete**	**NA**
Cannot Calculate Result	**"No value"**	**CCR**	DEVICE ERROR	**NA**	**incomplete**	**NA**

a. NA = Not applicable.

Test Reports

When testing is completed, a test report is generated and printed automatically. Test results are compared against customer defined reference ranges. Various test reports are shown in the UniCel DxC Synchron Clinical Systems *Reference Manual* and the DxI *Immunoassay System Reference Manual*.

Relative Light Units (RLUs) are not printed on DxC reports. RLUs are only printed on DxI reports.

Index

Numerics

10% bleach solution, 12-174, 12-178, 12-179, 12-181, 12-204, 12-205
70% isopropyl alcohol, 12-20, 12-35, 12-41, 12-174

A

Absorbance versus time, 4-25
AccuSense glucose sensor
  Connector port, 12-74
  Drain reaction cup for sensor, 12-73, 12-75
  Gasket, 12-74, 12-77
  Prepare prior to replacement, 12-75
  Replace, six-month, 12-76, 12-78
  Stir bar and cup, clean, 12-77
Air filters
  Change, 12-55
Alarm/Annunciator
  See Status Alarm/Annunciator
Alignment
  See UniCel DxC Clinical Systems *Reference Manual*
Alkaline buffer damper assembly
  Adjust fluid level
    Fluid level high, 12-32
    Fluid level low, 12-31
  Check fluid level, 12-33
  Replace alkaline buffer reagent, 12-28
Archive QC Data, 5-20
Aspirate probes cleaning, 12-121
Aspirate syringe volume, 12-99
Auto ORDAC, 10-3
Auto serum index, 10-3

B

Backup, 8-31
  Alignment data, 8-32
  System parameters, 8-2, 8-32
Bar code reader, 11-27
  Hand-held (MC), 11-23
  Reagent, CC, 11-27
  Sample, 11-20
Bar codes, QC, 5-6
Beer's Law, 11-18
BUNm/UREAm Electrode Maintenance, 12-37

C

Calibration
  Acceptance limits, 7-15
  Bypass, 7-13
  Calibrator set point modifications, 7-16
  Enzyme validator, 7-11
  Error detection, 11-17
  Extending calibration time, 7-14
  Failure messages, 7-6
  Formulas
    Endpoint and first-order, 11-8–11-13
    Non-linear, 11-14, 11-15
  Override, 7-12
  Reprint calibration report, 7-18, 7-20
  Request
    Canceling a calibration request, 7-5
  Slope offset adjustment, 7-17
  Status, 7-4
  Within-lot calibration, 7-7
    Designations, 7-9
    Enabling within-lot calibration, 7-7
    Frequency, 7-7
    Limitations, 7-10
Cap piercer
  1-Blade CTS option
    CTS Auto-Gloss
  1-Blade Narrow CTS, 11-20

1-Blade Narrow CTS option, 12-44
1-Blade Thick CTS, 11-20
1-Blade Thick CTS option, 12-44
See CTS
Carousel, 11-19
Cartridge chemistries (CC)
Calibration theory, 11-8–11-17
Spectrophotometric methods, 11-18
Cartridges, 11-27
Reagent, 11-27
CC reagent mixer, clean, 12-35
CC sample mixer, clean, 12-35
CC sample probe, reagent probes and mixers
Automated cartridge chemistry probe cleaning
Load CCWA, 12-196
Chemistry parameters, 10-30
Chemistry print name, defining, 10-24
Chemistry, configuring, 10-23
Clearing chemistries, 10-24
Deleting a chemistry, 10-24
Inserting a chemistry, 10-24
Chloride Electrode tip, Replace, 12-24, 12-47
Closed Tube Sampling
See CTS
CO_2 alkaline buffer reagent straw and line, bleaching
Line #33, 12-182
CO_2 measuring electrode membrane, 12-167
Broken, 12-172
ISE service, 12-47
Remove, 12-168
Replace, 12-170
Wrinkled, 12-172
Configuration, system, 10-17
Constituent code, 5-5, 5-8
Control, 5-6–5-13
Bar codes, 5-5
Constituent code, 5-5
Definition, 5-3
Deleting, 5-10
Editing, 5-6
Fields, 5-5, 5-8
File number, 5-5, 5-8
Printing, 5-9
QC chart, 5-15
QC file list, 5-13
QC summary, 5-14
Copy to disk feature, 5-18
Critical ranges, 10-11
Critical result rerun, 4-22, 10-6
CTA cleaning
Aliquot probe, 12-27
Auto-Gloss dispense station, 12-27
Probe wash station, 12-27
CTA maintenance (as-needed)
Aliquot probe flushing, 12-224
Replacing
Aliquot probe, 12-82
CTS (Closed Tube Sampling)
1-Blade Narrow CTS option, 11-20
1-Blade Thick CTS option, 4-13, 11-20
Blade count, 8-3
CTS Auto-Gloss, viii, 8-21
CTS Count, 8-3
CTS Tracking, 8-6
4-Blade Foil CTS option, 4-13
CTS Auto-Gloss, 12-16
CUPs lamp and sensor calibration, 12-36
Cuvette reaction system, 11-29
Cuvette washer probe, inspect
Blocked probe, 12-200
Cuvette washing
Wash station, 11-31
Cuvette wiper
Reinstall, 12-19
Replace, 12-17
Cuvettes
Automated wash all cuvettes, 12-201

D

Data storage, 4-20
Results, 4-20
Sample programs, 4-20
Date/time setup, 10-4
Deleted results, 8-26
Deleting, 5-17
Control, 5-10
Critical result rerun, 4-22
QC data point, 5-17
Demographics, 10-5
Diagnostics, 12-99
Dilution factor, 4-15
DL2000, 10-22
Drugs of abuse testing (DAT), 11-17
DxC Load Area, 9-9
DxC Sample
Handling system, 9-9

DxI online help feature, xxxviii

E

Editing
  Control, 5-6
EIC, 12-174
EIC ports, flushing, 12-174–12-181
  ISE service, 12-175
Electrolyte injection cup (EIC), 11-24
Enable/disable modules, 8-11, 8-12
Enzyme validator, 7-11
Enzyme verification, 11-17
Error detection
  See Calibration
Error detection limits, 10-39
Event log, 8-25
Exit check criteria, 10-43, 10-44
Expanded user defined chemistry feature, 10-46
Extinction coefficients, 10-42

F

Failure messages, calibration, 7-6
File number, 5-5, 5-8
Flow cell (ISE), 11-25
Flow cell tubing #23, 12-188
Flow cell tubing #27, 12-188
Flow cell tubing #35, 12-188
Flow cell, flushing
  ISE service, 12-187–12-190

H

Hand-held bar code reader, 6-35
Hazards, vii
Home, 8-8
Host communication, 10-22
Host specifications
  See Host Interface Specifications Manual (PN A16150)
Hydropneumatic system, 11-32
  Status, 8-5

I

ICS/smart module status, 8-6
Immediate reporting, 10-6
Independent operating modes, 9-1
ISE drain cleaning, six-month
  Drain top, 12-185
  Drip screen, 12-185
  ISE service, 12-184, 12-187
ISE module, 11-22
ISE reference solution, 12-68, 12-79

K

Keyboard, 10-16

L

Labels, xvii–xxiii
Laboratory information system (LIS), 4-1
Language/keyboard, selection, 10-16
Levey-Jennings, 5-15
LPIA (large particle immuno assay)
    module, 10-28, 10-32, 11-29, 11-30

M

Maintenance, 8-25
Manual assignments, 4-11
Math models, 10-32, 11-14, 11-15
Mixer wash cup, 11-29
  Reagent, 11-29
Modem, 8-31
Modular chemistries (MC)
  Basic components, 11-26
Modular reagents
  Check levels, 12-8, 12-16
Modules, 11-26
Modules, enable/disable, 8-11

N

No Foam, 12-16

O

Offload track, 9-9
Operating process, 11-7
Operator control devices
  Keyboard, 11-36
  Monitor, 11-36
  Push-button controls, 11-36
    Access control buttons, 11-39
    CTA control buttons, 11-38
    DxC control buttons, 11-38
ORDAC, 4-16
  Auto ORDAC, 10-3

Manual, 4-16

P

Panels, 10-7
Patient results
Critical results rerun, 4-22, 10-6, 10-11
Pause, 8-9
PHOSm, cleaning precipitate
Protein precipitate, 12-198
Photometer assembly, 10-32
Potassium and calcium electrode tips
Replacing, six-month
ISE service, 12-69
Removing/installing, 12-67–12-73
Power Subsystem Status, 8-4
Precautions, x–xvii, 5-6
Preparing test samples
Sample containers, 4-2
Prime, 8-20
Printers, 10-17
Printing, 4-23, 5-9
Control, 5-10
QC chart, 5-15
QC file list, 5-13
Recalled results, 4-23
Priority
Position, 9-9
Priority load, 9-9
Probes, clean, 12-20
Processing parameters, 10-34
Programming samples
Batch, 4-16
Dilution factor, 4-15
Manual, 4-16
Manual assignments, 4-11
ORDAC, 4-16
Rack status, 4-8
Rack/cup position, 4-10
Sample ID, 4-10
Sample status, 4-10
Pushers, 9-10

Q

QAP Disk, 5-18
Quad-ring
BUNm/UREAm electrode, 12-40, 12-160, 12-165
CO_2 measuring electrode, 12-169
Potassium and calcium electrode, 12-48, 12-71, 12-151
Quality Assurance Program (QAP)
Copy to disk feature, 5-18
Quality control (QC), 5-1–5-22
Chart, 5-15
QC action log, 5-17
QC chart, 5-15
QC file list, 5-13
Displaying, 5-13
QC log, 5-16
Summary, 5-14

R

Racks, 11-40
Status, 4-8
Ratio pump, 11-23
Reaction carousel, 11-29
Cuvettes, 11-29
Reaction type, 10-30
Reagent carousel, 11-27
Reagent cartridges, 11-27
Reagent handling system, CC, 11-26
Reagent parameters, 6-49
Loading, 6-49
Reagent status
Sorting reagent status
Days left, 6-38
Tests left, 6-38
Reagent syringe
See also Sample and reagent syringes, replacing three-month
Recalling results, 4-21
Displaying, 4-22
Printing, 4-23
Replicates, 10-8
Reportable range, 10-9
Reports, 10-8
Statistical summary, 4-26
Restore, 5-21, 8-31
Restore and review, 5-21
Results recall, 4-20
Retainer nut, 12-40, 12-48, 12-71, 12-77, 12-151, 12-160
Reviewing, 5-9

S

Sample

Carousel, 11-21
Gate, 9-10
Handling system, 11-19
Replicates, 10-8
Type
Default, 10-4
Sample and reagent syringes, replacing three-month
Checking for bubbles, 12-61, 12-81
Plunger rods, 12-58
Syringe rod replacement, 12-58
Sample syringe, 12-57
Serum index
Auto ORDAC, 10-3
Setup
Screens, 10-2
Shutdown, 8-14, 8-17
Silicone compound, 12-42, 12-165
Smart modules
Status, 8-6
Sodium Azide preservative, x
Special calculations, 10-12
Specifications, system
Elevation, 11-5
Operating temperature, 11-5
STAT, 4-1, 10-6
Statistical summary report, 4-26
Status
Alarm/Annunciator, 10-18
See also System status, 8-1
Status-cycle count, 8-2
Stop print, 8-10
Surfaces and covers, cleaning, 12-203
Symbols, xvii–xxiii
System components
Closed tube aliquotter (CTA) unit
Access sample carousel, 11-36
Aliquot probe, 11-35
Aliquot vessel, 11-35
Automation rack, 11-36
AV queue area, 11-35
CTA sample wheel, 11-34
DxC sample wheel, 11-36
Pick-and-place head, 11-36
Piercing probe, 11-34
Sample aliquotting area, 11-35, 11-36
DxC analyzer, 1-2
System configuration, 10-17
System monitoring, 11-41
DxI codes converted to DxC codes for Integrated Workstation reporting, 11-41
error codes, 11-41
Test reports, 11-42
Test result errors, 11-41
System Status, 8-1

T

Temperatures, 8-2
Theory of operation, 11-6
Total protein cup maintenance, 12-19

U

UCTA cleaning, 12-26
UCTA maintenance (as-needed)
Replacing
Aliquot probe, 12-91
Syringes, 12-98
Sample/Wash Syringe Cleaning, 12-223
UCTA maintenance (twice-monthly), 12-26
UCTA Replace
Pick and Place Head, 12-218
Unload all, 8-13
Update, 10-17
See Version upgrade
User, 10-29
User defined reagents
Configuring, 10-24
Defining, 10-29–10-45
Deleting, 10-24
Inserting, 10-24
Minimum operating requirements, 10-28
Removing, 10-45
Setup, 10-13, 10-29

V

Valid entries, 4-11
Version Information, 10-13
Version upgrade, 10-17

W

Warnings, reagent and calibration status, 7-5
Wash Concentrate II, 12-16
Waste B, pause/resume, 8-11
Wavelength
Primary, 10-32, 10-41
Secondary, 10-32, 10-41

Wheel
See Carousel
Wrist ground strap, 12-24, 12-57

Related Documents

Synchron Clinical Systems *Chemistry Information Sheets* and Synchron Clinical Systems *Chemistry Reference Manual*

- Contain specific chemistry information for the full range of analytes available on UniCel DxC and Synchron Systems.

Synchron Clinical Systems *Performance Verification Manual*

- Provides you with a basic guideline for verifying the performance of your UniCel Integrated Workstation.

UniCel DxC Integrated Workstation Synchron Access Clinical System UCTA Primary Tube *Sample Template*

- This template is used to determine if primary tube samples have at least 264 µL of sample available for testing. This volume of sample is sufficient to run most 20-test general chemistry panels.

UniCel DxC Integrated Workstation *In-Lab Training Manual*

- Used to train laboratory personnel on UniCel Integrated Workstation routine operations.

UniCel DxC Synchron Clinical Systems *Host Interface Specifications*

- Contains the necessary information to interface UniCel DxC Systems to a Laboratory Information System (LIS).

UniCel DxC Synchron Clinical Systems *Reference Manual*

- Contains detailed operating instructions and supplemental maintenance and troubleshooting guidelines for UniCel DxC Systems. It also contains information about the UniCel DxC Systems, such as theory of operation, system specifications and safety information.

www.beckmancoulter.com

BECKMAN COULTER

© 2014 Beckman Coulter, Inc.
All Rights Reserved

Instructions For Use

Volume 2

UniCel DxC Synchron Access Clinical System Integrated Workstations

For *In Vitro* Diagnostic Use

This manual is intended for
UniCel DxC 660i
UniCel DxC 680i
UniCel DxC 860i
UniCel DxC 880i

A93829AC
March 2014

Beckman Coulter, Inc.
250 S. Kraemer Blvd.
Brea, CA 92821 U.S.A.

BECKMAN COULTER

Instructions For Use
UniCel DxC Synchron Access Clinical System
PN A93829AC (March 2014)

© 2014 Beckman Coulter, Inc.
All rights reserved

Trademarks
Beckman Coulter, the Beckman Coulter logo, Access, Synchron, UniCel, and DxC are trademarks of Beckman Coulter, Inc. and are registered in the USPTO. All other trademarks are the property of their respective owners.

Following is a list of Beckman Coulter trademarks

- AccuSense
- Microtube
- DxI
- SPINCHRON

Find us on the World Wide Web at:
www.beckmancoulter.com

EC REP
Beckman Coulter Ireland, Inc.
Mervue Business Park, Mervue Galway, Ireland 353 91 774068

Beckman Coulter do Brasil Com e Imp de Prod de Lab Ltda
Estr dos Romeiros, 220 - Galpao G3 - Km 38.5
06501-001 - Sao Paulo - SP - Brasil
CNPJ: 42.160.812/0001-44

製造販売元 : ベックマン・コールター株式会社
東京都江東区有明三丁目 5 番 7 号
TOC 有明ウエストタワー

贝克曼库尔特有限公司，
美国加利福尼亚州，Brea 市，S. Kraemer 大街 250 号，
邮编：92821 电话：(001) 714-993-5321

Contents

Revision History, iii

Safety Notice, vii

General Information, xxxvii

CHAPTER 1: System Description, 1-1

Introduction, 1-1
- DxC Analyzer, 1-2
- DxI Analyzer, 1-2
- UniCel CTA, 1-2

Integrated Workstation Sample Processing, 1-2

Component Analyzers, 1-4
- DxC Analyzer, 1-4
- DxI Analyzer, 1-6

CHAPTER 2: Software Description, 2-1

Introduction, 2-1

Integrated Workstation Main Screen, 2-1
- Common Screen Elements, 2-2
- Main Screen Elements, 2-8

DxI Main Menu, 2-13
- DxI Event Log, 2-13

Integrated Workstation Program Structure, 2-13

CHAPTER 3: Daily Start Up, 3-1

Introduction, 3-1

Start Up Procedure, 3-1

Clear Manually Assigned Racks, 3-2

Determine Integrated Workstation Supply and Calibration Status, 3-2

Replenish DxI Supplies and Reagents, 3-3

Perform DxI Daily Maintenance, 3-4

Replenish UCTA Supplies, 3-4

Replenish DxC Reagents, 3-5

Calibrate DxC Chemistries, 3-5

Calibrate DxI Assays, 3-6

Process Quality Control, 3-7

CHAPTER 4: Sample Programming and Processing, 4-1

Introduction, 4-1

Sample Processing Procedure, 4-2

Prepare Samples for Analysis, 4-2
- Check Sample Containers, 4-2
- Bar Code Labeling, 4-7

Prior to Programming, 4-8
- Rack Status, 4-8
- Identify Samples, 4-10

Program Samples, 4-11
- Samples with Host (LIS) Programming, 4-11
- Program Samples Manually, 4-12
- Add Tests or Rerun a Sample, 4-13

Additional Programming Information, 4-14
- DxI Communication, 4-14
- Chemistry Status, 4-15
- Sample Options, 4-15
- Batch Programming, 4-16

Process Samples, 4-18

Clear Samples, 4-18
- Introduction, 4-18
- Range of Sample IDs, 4-19
- Procedure for Clearing Samples, 4-19

Results Recall, 4-20
- Introduction, 4-20
- Limitations, 4-20
- Procedure for Recalling Results, 4-21
- Display Recalled Results, 4-22
- Edit Critical Rerun Result, 4-22
- Print Recalled Results, 4-23
- Send Results to the Host (LIS), 4-24
- Absorbance Versus Time, 4-25
- Statistical Summary Report, 4-26

CHAPTER 5: Quality Control, 5-1

Introduction, 5-1
- DxI Restrictions, 5-1

Process QC Procedure, 5-3

Define a Control, 5-3
- Introduction, 5-3
- Special or Unique Control Samples, 5-3
- Control Identifiers, 5-4
- Define a Control, 5-4
- Control ID Assignments, 5-5
- Edit a Control Definition, 5-6
- Modify Assigned Mean, Assigned SD or Constituent Code, 5-7
- Review a Control Definition, 5-9
- Print QC Ranges, 5-9
- Delete a Control, 5-10

Program QC, 5-10
- Auto Generation of Control, 5-10
- Manually Programming Control Samples, 5-11

Run Control Samples, 5-12
- Introduction, 5-12
- Run Control Samples With Bar Code Labels and Auto Generation of Control Enabled, 5-12

Manage Results, 5-13
- Introduction, 5-13
- QC File List, 5-13
- QC Summary, 5-14
- QC Chart (Levey-Jennings), 5-15
- QC Log, 5-16

Quality Assurance Program (QAP), 5-18
- QAP “Copy To External Media” Feature, 5-18

Archive Results, 5-20
- Archive QC, 5-20
- Review Archived Data, 5-21

CHAPTER 6: Supplies, 6-1

Overview, 6-1
- Workstation Console Rgts/Cal Screen, 6-1
- The Integrated Workstation Supply/Calibration Report, 6-2

DxI Supplies and Conditions, 6-2
- Overview, 6-2
- Rgts/Cal: Supplies Tab, DxI Supplies, 6-3
- Substrate, 6-7
- Wash Buffer, 6-13
- Reaction Vessels, 6-17
- Liquid Waste, 6-18
- Solid Waste, 6-21
- Rgts/Cal: DxI Tab Overview, 6-23

UCTA Supplies, 6-30

Rgts/Cal: Supplies Tab, UCTA Supplies, 6-30
Change the Wash Buffer at the UCTA Unit, 6-32
Change the Auto-Gloss Solution at the UCTA Unit, 6-34
Edit the Volume for the Auto-Gloss Solution at the UCTA Unit, 6-35

DxC Supplies and Reagents, 6-36
Reagent Load, 6-36
PreRun Checklist, 6-36
Rgts/Cal: DxC Tab Overview, 6-37
Sort Reagent Status, 6-38
Load/Unload Reagent, 6-39
Reagent Parameters, 6-49

CHAPTER 7: Calibration, 7-1

Introduction, 7-1

Load Calibrator from External Media, 7-2

Calibrator Assignment, 7-3

Calibration Status, 7-4
Introduction, 7-4
Calibration Status Messages, 7-4

Reagent and Calibration Status Warnings, 7-5
Introduction, 7-5
Conditions that Cause a Calibration Status Warning, 7-5

Request a Calibration, 7-5
Cancel a Calibration Request, 7-5

Calibration Failure Messages, 7-6
Introduction, 7-6
CC Subsystem Calibration Failure, 7-6
MC Subsystem Calibration Failure, 7-6

Within Lot Calibration, 7-7
Introduction, 7-7
Within Lot Calibration Frequency, 7-7
Enable Within Lot Calibration, 7-7
Within Lot Calibration Status Screen, 7-8
Within Lot Designations, 7-9
Within Lot Calibration Limitations, 7-10

Enzyme Validator, 7-11
Introduction, 7-11

Calibration Override, 7-12
Introduction, 7-12
Override a Calibration, 7-12
Remove Cal Overridden Status, 7-12

Chemistry Bypass, 7-13
Introduction, 7-13
Bypass a Chemistry, 7-13

Remove a Bypassed Status, 7-13

Extend Calibration Time, 7-14
Introduction, 7-14
Extend Calibration Time, 7-14
Remove an Extended Status, 7-14

Calibration Acceptance Limits, 7-15
Introduction, 7-15
View Calibrator Acceptance Limits, 7-15

Calibrator Set Point Modifications, 7-16
Introduction, 7-16
Modify Calibrator Set Points, 7-16

Slope/Offset Adjustment, 7-17
Introduction, 7-17
Slope/Offset Recommendations, 7-17

Reprint Calibration Reports, 7-18
Introduction, 7-18
Reprint Current Calibration Reports, 7-18
Reprint Previous Calibration Reports, 7-19

Archive Calibration , 7-20
Introduction, 7-20
Archive Calibration Reports, 7-20

CHAPTER 8: System Status, Instrument Commands, and Utilities, 8-1

Overview, 8-1

System Status, 8-1
Introduction, 8-1
Show Status Summary, 8-1
Possible Status Messages, 8-2
Return to Status Summary, 8-2
Status-Cycle Count, 8-2
Temperatures, 8-3
Power Subsystems, 8-4
Hydropneumatics Subsystem, 8-5
Cuvette Water Blank Status, 8-5
ICS/Smart Modules, 8-6
CTS Tracking, 8-6

Instrument Commands, 8-7
Commands, 8-7
Home, 8-8
Pause, 8-9
Stop Print, 8-10
Pause/Resume Waste B, 8-11
Enable/Disable Modules, 8-11
Unload All, 8-13
System Shutdown/Restart, 8-14

Utilities, 8-19
Prime, 8-20
Maintenance, 8-25
Event Log, 8-25
Alignment/Diagnostics/PVTs, 8-30
Metering, 8-31
Modem, 8-31
Backup/Restore, 8-31
Touch Screen Calibration, 8-35

CHAPTER 9: Independent Mode, 9-1

Introduction, 9-1

Independent Operating Modes, 9-1
UCTA is Non-operational, 9-1
DxI is Non-operational, 9-4
DxC is Non-operational (Chemistry Analytical Unit & Console), 9-5
DxC is Non-operational (Chemistry Analytical Unit Only), 9-7

DxC Sample Handling System, 9-9
DxC Load Area/Offload Track, 9-9
Priority Load Position, 9-9
Priority Load Button, 9-10
Pushers, 9-10
Sample Gate, 9-10

Sample Preparation by Container Type, 9-10

CHAPTER 10: System Setup, 10-1

Introduction, 10-1

System Setup Screen, 10-1
Introduction, 10-1
Auto Serum Index/ORDAC, 10-3
Setting the Default Sample Type, 10-4
Date/Time, 10-4
Demographics Setup, 10-5
Patient Results – Immediate Reporting Setup, 10-6
Panels, 10-7
Replicates, 10-8
Report Setup, 10-8
Reportable Ranges Setup, 10-9
Reference/Critical Ranges, 10-11
Sample Comments Setup, 10-12
Special Calculations Definition, 10-12
Version Information, 10-13
Units/Precision Setup, 10-13
User Defined Chemistries Setup, 10-13
Bar Code Setup, 10-14
Maximum Sample Program Age, 10-14
Reserved Rack Setup, 10-15

Host Communications, 10-15
Language/Keyboard Setup, 10-16
Printer Setup, 10-17
System Configuration, 10-17
Version Upgrade, 10-17
Status Alarm/Annunciator, 10-18
Chemistry Update, 10-18
Password Setup, 10-18
Auto Generation of Control, 10-20
DxI Priority/Reflex Test Setup, 10-20
UCTA Setup, 10-22

Configure the Chemistry Menu, 10-23
Introduction, 10-23
Configure a Beckman Coulter Chemistry, 10-23
Define Chemistry Print Name, 10-24
Insert a Chemistry, 10-24
Delete a Chemistry, 10-24

User-Defined Reagents, 10-27
Requirements and Precautions, 10-28
User-Defined Reagent Setup, 10-29
Chemistry Parameters, 10-30
Processing Parameters, 10-34
Error Detection Limits, 10-39
Wavelength Selection, 10-41
Determination of Extinction Coefficients, 10-42
Exit Check Criteria, 10-43
User Defined Reagent Removal, 10-45
Expanded User Defined Chemistry Feature, 10-46

CHAPTER 11: System Reference, 11-1

Introduction, 11-1

Intended Use, 11-1

Operational Conditions, 11-2
Shipping Damage, 11-2
Installation, 11-2
Clearances, 11-2
Sunlight and Drafts, 11-2
Drain, 11-3
Power Requirements, 11-3
Environmental Conditions, 11-5
Water Requirements, 11-5
Other System Specifications for IEC-1010 Compliance, 11-6

Theory of Operation, 11-6

Cartridge Chemistry: Calibration Theory, 11-8
Introduction, 11-8
Endpoint and First-Order Chemistries, 11-8

Endpoint and First-Order Calibration Formulas, 11-8
Non-Linear Chemistries, 11-14
Non-Linear Calibration Formulas, 11-14
Drugs of Abuse Testing (DAT) Chemistries, 11-17
Enzyme Verification, 11-17

Modular Chemistry: Calibration Theory, 11-17
Calibration Theory, 11-17
Calibration Error Detection, 11-17

DxI Immunoassay Calibration Theory, 11-17

Cartridge Chemistry: Principles of Measurement, 11-18
Spectrophotometric Methods, 11-18
Beer's Law, 11-18

System Component Reference, 11-18
DxC Systems, 11-18

Sample Handling Components, 11-19
Introduction, 11-19
DxC Bar Code Reader (Sample), 11-20
1-Blade Thick CTS (Closed Tube Sampling) or 1-Blade Narrow CTS Cap Piercer Assembly , 11-20
Sample Carousel, 11-21

Modular Chemistry (MC) System, 11-22
Introduction, 11-22
Reagent Storage Area, 11-22
Reagent Bar Code Reader (Modular), 11-23
Ratio Pump, 11-23
Electrolyte Injection Cup (EIC), 11-24
Flow Cell Assembly, 11-25
Chemistry Reaction Modules (Basic Components), 11-26

Cartridge Chemistry (CC) Reagent Handling System, 11-26
Introduction, 11-26
Reagent Cartridges, 11-27
Reagent Carousel and Reagent Bar Code Readers, 11-27
Reagent Probe Assembly, 11-28
Reagent Mixer Assembly, 11-29
Reagent Mixer Wash Cup, 11-29

Cuvette Reaction System, 11-29
Introduction, 11-29
Reaction Carousel, 11-29
Photometer Assembly, 11-30
LPIA (Large Particle Immuno Assay), 11-30
Cuvette Wash Station, 11-31

Hydropneumatic System, 11-32
Introduction, 11-32
Function, 11-33

UCTA (UniCel Closed Tube Aliquotter), 11-34

Operator Control Devices, 11-36
Control Buttons, 11-38

Rack ID Labels, 11-40

System Monitoring, 11-41
Test Result Errors, 11-41
Error Codes, 11-41
DxI Codes Converted to DxC Codes for Integrated Workstation Reporting, 11-41
Test Reports, 11-42

CHAPTER 12: Maintenance, 12-1

Introduction, 12-1
Basic Laboratory Practice, 12-1
Electronic Scheduled Maintenance Log, 12-2

General Instructions, 12-8

Daily Maintenance, 12-8
Back Up DxI, 12-8
Shake the DxI Solid Waste Container, 12-10
Run DxI Clean Routine, 12-10
Prime the Fluidics, 12-13

Twice Weekly Maintenance, 12-15
Clean Flow Cell (Automated), 12-15

Weekly Maintenance, 12-16
Check Reagent Levels, 12-16
Replace Cuvette Wiper, 12-17
Clean ALBm & TPm Cup Modules (DxC 800 only) , 12-19
Clean Probes (Exterior), 12-20
Clean Flow Cell, Cups and CC Probes/Mixers (Automated), 12-22
Check Chloride Calibration Span, 12-24
Check Syringe Tightness, 12-24
Install Clean DxI Aspirate Probes, 12-25

Twice Monthly Maintenance, 12-26
Clean the UCTA Aliquot and Piercer Probes, 12-26

Monthly Maintenance, 12-27
Replace Alkaline Buffer, 12-27
Adjust the Fluid Level of the Alkaline Buffer Damper Assembly, 12-31
Clean All Cup Modules, 12-34
Clean Mixers, 12-35
Calibrate Lamps and Sensor, 12-36
BUNm/UREAm Electrode Maintenance (DxC 800 Only), 12-37
Replace CTS Blade (1-Blade Narrow CTS Option), 12-43
Clean Chloride Electrode Tip and Flow Cell Port, 12-47

Two-Month Maintenance, 12-51
Replace CTS Blade/Wick (1-Blade Thick CTS Option), 12-51

Change/Clean DxC Air Filters, 12-55

Three-Month Maintenance, 12-57
Replace 500 µL Reagent Syringe Plunger, 12-57

Four-Month Maintenance, 12-62
Clean the MC Reagent Lines, 12-62

Other: Six-Month Maintenance, 12-67
Replace Calcium and Potassium Electrode Tips, 12-67
Replace Glucose Sensor, 12-73
Replace 100 µL Sample Syringes, 12-79

Other: Yearly Maintenance, 12-82
Replace the UCTA Aliquot Probes, 12-82
UCTA Carryover PVT Procedure, 12-89
Replace the UCTA Piercer Probes, 12-91
Replace UCTA Drain Pump Tubing, 12-94
Replace UCTA Sample and Wash Station Syringes, 12-98

Other: 5,000 Test Interval Maintenance, 12-101
Replace DxI Duck Bill Valve, 12-101
Initialize the DxI System, 12-109
Verify DxI System Performance, 12-110

Other: 10,000 Test Interval Maintenance, 12-110
Install Clean DxI Aspirate Probes, 12-111
Clean the Aspirate Probes, 12-121
Remove and Inspect DxI Dispense Probes, 12-124
Check DxI Pump Fittings - Wash Buffer Reservoir, 12-131
Check DxI Upper Aspirate Peri-Pump Fittings, 12-134
Check DxI Reagent Pipettors and Clean Wash Towers, 12-136
Check DxI for Fallen RVs, 12-139
Check DxI Liquid Waste Drawer, 12-141
Check DxI Wash Buffer Supply Drawer, 12-143
Clean DxI Air Filter, 12-144

As-Needed/As-Required Maintenance, 12-146
Introduction, 12-147
Action Log, 12-147
CC Probes Cleaning (Manual Program), 12-147
Replace the Chloride Electrode Tip, 12-149
Replace the Sodium Measuring/Reference Electrode, 12-152
Replace the BUNm/UREAm Electrode (DxC 800 Only), 12-158
Replace the CO2 Membrane, 12-167
Clean the EIC Port, 12-174
Clean the CO2 Alkaline Buffer Lines, 12-181
Clean the ISE Drain, 12-184
Flush the Flow Cell (Manual), 12-187
Flush the Sample and Reagent Probe, 12-190
Replace the Sample and Reagent Probe, 12-192
Clean the CC Sample Probe, Reagent Probes and Mixers, 12-196
Clean the MC Sample Probe Collar Wash Assembly, 12-196

Clean the Precipitate in PHOSm (DxC 800 Only), 12-198
Inspect the Cuvette Washer Probes, 12-199
Wash All Cuvettes With System Wash, 12-201
Wash the CC Reagent Cuvettes with CCWA, 12-202
Clean the Work Surfaces, 12-203
Decontaminate the Sample Racks, 12-204
Decontaminate the DxC Instrument, 12-204
Replace the CTS Wick, 12-208
Replace ISE Drain Pump Tube, 12-216
Replace the UCTA Pick and Place Head, 12-218
Clean the UCTA Left/Right Sample and Wash Syringes, 12-223
Flush the UCTA Left/Right Aliquot Probes, 12-224
UCTA Accuracy PVT Procedure, 12-226
Obstruction Detection and Correction (ODC), 12-229
Clean UCTA Waste Sump Exterior, 12-231
ISE Service, 12-232

CHAPTER 13: Troubleshooting Calibration and Result Errors, 13-1

Calibration Errors, 13-1
- Introduction, 13-1
- Calibration Error Checking, 13-1
- Calibration Error Flags, 13-1

MC Calibration, 13-2
- Overview, 13-2
- MC Calibration Checks, 13-2
- Back-to-Back, 13-2
- Calibrator Range (High/Low), 13-3
- DAC, 13-3
- Sample/Reference Deviation, 13-4
- Span, 13-4
- Calibration Reports, 13-4

Linear Calibration, 13-6
- Overview, 13-6
- Back-to-Back, 13-7
- Calibrator Range (High/Low), 13-7
- Span, 13-7
- Linear Calibration Report, 13-7

Non-Linear and Multipoint Calibrations, 13-9
- Overview, 13-9
- Non-Linear Calibration Checks, 13-10
- Multipoint Span, 13-10
- Recovery, 13-10
- Severe Recovery, 13-10
- Sensitivity, 13-10
- Severe Sensitivity, 13-10
- Math Errors, 13-10
- Calibration Report, 13-11

Troubleshooting Result Errors, 13-13
Result Errors, 13-13

Error Codes and Definitions, 13-14
Result Errors and Codes, 13-14

Error Code – Definitions, 13-17

Common Error Messages and Corrective Actions, 13-23
Online Manual Links, 13-23

Index

Related Documents

CHAPTER 12

Maintenance

Introduction

The Integrated Workstation requires routine maintenance to ensure optimal performance and reduce service calls. The Maintenance screen, available from the **Utils** icon on the workstation console, lists the automated maintenance procedures for the DxC. The Maintenance screen also includes an electronic log of regularly scheduled maintenance tasks. Instructions for all tasks are available from the Help icon ? next to each procedure on the screens, and in this chapter.

WARNING

Maintenance procedures may expose you to potentially infectious materials. Always wear proper hand, eye, and facial protection. Handle and dispose of biohazard materials according to proper laboratory procedures.

Basic Laboratory Practice

The maintenance frequencies established in this manual for the UCTA and the DxC are based on processing approximately 400 samples/day. The maintenance schedule for the DxI is based on the number of tests run.

The number of samples processed by the system, combined with the nature of the samples, may require you to adjust the stated maintenance frequencies.

As with any laboratory equipment, keep the exterior of the Integrated Workstation clean. Clean up any spills promptly. Investigate spills that may be caused by leaking reagent lines or fittings.

Certain procedures in this manual require the use of a grounded wrist strap while the procedure is being performed. Place the strap portion around the wrist. Connect the wire portion to the system in one of the following ways:

- Alligator Clipped: Clamp wrist straps with an "alligator" clip onto the metal frame of the system. To access, open either the left or center door. You can close the doors after the clip is attached to the metal frame.
- Banana Plug Insert: Insert wrist straps with a "banana" plug into the jack found next to the Stop button on the front of the DxC. (See Figure 12.1.)

Figure 12.1 Chassis Ground

Electronic Scheduled Maintenance Log

The Scheduled Maintenance Log includes separate tabs for the different maintenance intervals. Each of these tabs lists maintenance tasks required at the interval, and includes functionality to record the date the task is performed and the operator's initials. The interval tabs include:

- Daily
- Weekly[a]
- 2x Month
- Monthly
- 2-Month
- 3-Month
- 4-Month
- Other

a. Twice Weekly Maintenance is located under the Weekly tab.

When procedures are DUE, the tabs are highlighted in yellow. The yellow highlights appear according to the following schedule:

- Daily - 1 day
- Twice Weekly - 4 days/3 days
- Weekly - 7 days
- 2x Month - 15 days
- Monthly - 31 days
- 2-Month - 61 days
- 3-Month - 91 days
- 4-Month - 121 days
- 5,000 Test Interval - when test countdown is <500
- 10,000 Test Interval - when test countdown is <500
- Six-Month - 181 days
- Yearly - 366 days

The Scheduled Maintenance Log includes only the maintenance items appropriate for the particular system and installed hardware.

The system preserves maintenance records during software version updates. If you perform a complete software installation under unusual troubleshooting or system repair situations, the system clears the maintenance log.

IMPORTANT Back up maintenance files onto external media at scheduled intervals. Refer to CHAPTER 8, *System Status, Instrument Commands, and Utilities* for Backup/Restore instructions. You can also print and store electronic maintenance data if required by laboratory policy.

Accessing the Scheduled Maintenance Log

1. Select **Utils** from the menu bar.
2. Select **2 Maintenance** from the Utilities screen.
3. Select **Log F2**.
4. Select the tab representing the desired maintenance interval.

Screen Description

Figure 12.2 Scheduled Maintenance Log Screen

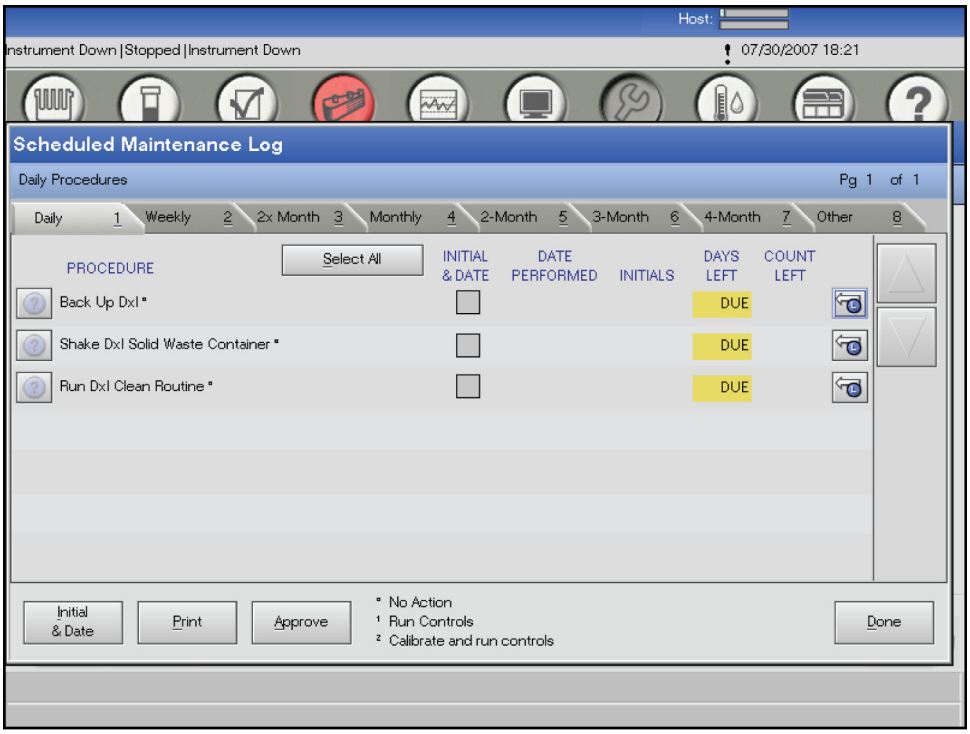

E007666S.PNG

The information and functions available under each tab of the Scheduled Maintenance Log are described below.

Help

The system includes online Help for all maintenance tasks listed. Select the Help icon ? next to the maintenance procedure to display specific information about the procedure. If the Help icon is grayed out, the *Instructions For Use* manual is not loaded.

Procedure

This area lists the procedures required at the specified interval. Each procedure includes a number to indicate the action required when the procedure is complete, as follows:

- 0 = No action required.
- 1 = Run Controls. If controls are within specifications, no more action is necessary. If controls are out of specification, calibrate or perform routine troubleshooting (verify that there are no leaks or loose components due to maintenance).
- 2 = Calibrate and run controls. If controls are within specifications, no action is necessary. If calibration fails or controls are out of specification, perform routine troubleshooting (verify that there are no leaks or loose components due to maintenance).

Initial & Date Check Box

To sign off a procedure as complete, select the **Initial & Date** check box next to the procedure. You can select multiple procedures. To complete the entry of this information, select the **Initial & Date** button.

Initial & Date Button

When you have selected all the procedures you want to sign off, select the **Initial & Date** button. The system displays a pop-up window. Enter the initials of the person who performed the procedure and the date it was performed.

When you initial and date a procedure, the maintenance counter resets for the appropriate time interval.

Select All

Select this button to select all the maintenance procedures on the tab, to initial and date them at one time.

NOTE **Select All** selects all maintenance procedures on the current tab, even if they are not visible on the screen.

Date Performed Field

Shows the last date the procedure was performed.

Initials Field

Shows the initials entered when the procedure was last performed.

Days Left Field

Shows the number of days left until the procedure is due. When a procedure is actually due or past due to be performed, the word DUE is shown in this area and highlighted in yellow.

A yellow DUE indication will NOT prevent the system from being run.

IMPORTANT If your lab has never recorded performing a maintenance procedure by entering initials and date, the **DUE** field is highlighted in yellow, but the associated tab is not. This gives you the option not to use the Scheduled Maintenance Log. There is no way to deactivate the yellow DUE highlighting for an individual procedure.

Count Left Field

Certain maintenance procedures are tracked by counting the number of samples run through the system. This column shows a countdown of the number of samples that can be run until the maintenance procedure is due. If no numbers appear in this column, the procedure is not tracked by count.

History

Select the History icon to display a stored history of maintenance performance with dates and initials for the procedure selected.

NOTE You can delete maintenance history from this screen. Beckman Coulter recommends that you print out any maintenance history before you delete it. Once deleted, there is no way to recover the information.

Print
Select this button and enter the Month and Year to print a list of all tabs with maintenance data for the selected month.

Approve
Select this button to approve the entries on the Scheduled Maintenance Log screen. The system displays a pop-up window with date and initial entry for supervisory approval.

NOTE Approve approves all maintenance procedures on all tabs.

Done
Select this button to exit the Scheduled Maintenance Log screen and return to the Maintenance screen.

Electronic Maintenance Tabs and Tasks

Daily
- Back Up DxI
- Shake the DxI Solid Waste Container
- Run DxI Clean Routine

Weekly
- Check Reagent Levels
- Replace Cuvette Wiper
- Clean ALBm & TPm Cup Modules (DxC 800 only)
- Clean Probes (Exterior)
- Clean Flow Cell (12-15)(Twice weekly)
- Clean Cups (12-22)
- CC Probe Cleaning (12-22)
- Check Chloride Calibration Span
- Check Syringe Tightness
- Install Clean DxI Aspirate Probes (HIV antibody levels only)

2x Month
- Clean the UCTA Aliquot and Piercer Probes

Monthly
- Replace Alkaline Buffer
- Clean All Cup Modules
- Clean Mixers
- Calibrate Lamps and Sensor
- BUNm/UREAm Electrode Maintenance (DxC 800 Only)
- Replace CTS Blade (1-Blade Narrow CTS Option) (monthly or 15,000 cuts)
- Clean Chloride Electrode Tip and Flow Cell Port

2-Month

- Replace CTS Blade/Wick (1-Blade Thick CTS Option) (2-month or 30,000 cuts)
- Change/Clean DxC Air Filters

3-Month

- Replace 500 µL Reagent Syringe Plunger

4-Month

- Clean the MC Reagent Lines

Other

(Six-Month)

- Replace CALC Electrode Tip (6 months or 80,000 samples)(12-67)
- Replace K Electrode Tip (12-67)
- Replace Glucose Sensor
- Replace 100 µL Sample Syringes

(Yearly)

- Replace UCTA Left Aliquot Probe (12-82)
- Replace UCTA Right Aliquot Probe (12-82)
- Replace UCTA Left Piercer Probe (12-91)
- Replace UCTA Right Piercer Probe (12-91)
- Replace UCTA Drain Pump Tubing
- Replace UCTA Left Sample Syringe (12-98)
- Replace UCTA Right Sample Syringe (12-98)
- Replace UCTA Left Wash Syringe (12-98)
- Replace UCTA Right Wash Syringe (12-98)

(5,000 Test Interval)

- Replace DxI Duck Bill Valve
- Run DxI Clean Routine and QC (12-10)

(10,000 Test Interval)

- Install Clean DxI Aspirate Probes
- Remove and Inspect DxI Dispense Probes
- Check DxI Pump Fittings - Wash Buffer Reservoir
- Check DxI Reagent Pipettors (12-136)
- Clean DxI Wash Towers (12-136)
- Check DxI for Fallen RVs
- Check DxI Liquid Waste Drawer
- Check DxI Wash Buffer Supply Drawer

- Clean DxI Air Filter

General Instructions

The DxC and DxI analyzers should be in *Standby* and *Ready* modes. The UCTA should be in Standby mode. DxC system status must be in *Standby* to access the Maintenance mode. Refer to the DxI online help for complete maintenance and special handling instructions. Record all maintenance in the Electronic Scheduled Maintenance Log.

Daily Maintenance

- Back Up DxI
- Shake the DxI Solid Waste Container
- Run DxI Clean Routine
- Clean the UCTA Aliquot and Piercer Probes (Sarstedt only)

Back Up DxI

If your DxI system uses a tape drive, follow this procedure to back up the system each day to save your system data files. If your DxI system uses a USB flash drive, perform Steps 1 and 6 only. Perform this procedure at the DxI console and instrument.

1. To confirm a scheduled backup, select **Configure F8** from the DxI Main Menu, then select **PC Admin F7**. Review the information in the **Last Backup** section of the PC Admin screen. (If you are backing up to a USB flash drive, continue with Step 6.)
2. If the backup has successfully run, select **Eject F3**. The system rewinds the tape.
3. Select **OK** and replace the tape with another tape for the next scheduled backup.
4. Label the tape according to laboratory policy. At a minimum, mark the tape with the backup date and time and the system ID.
5. Store the tape in a safe place.
6. If the backup was not successful, perform an Immediate System Backup or schedule a system backup. (See Scheduled System Backups in the DxI online help.)

Immediate System Backup

Use this procedure to perform an immediate system backup. Perform this procedure at the DxI console and instrument.

System Mode: Ready, Not Ready

NOTE You need the system password to perform backups. If you do not know the password, contact your lab supervisor.

1. Load the backup tape into the tape drive.
2. Select **Configure F8** from the DxI Main Menu, then select **PC Admin F7**.
3. Select **Immediate Backup F2**.
4. Type the system password, then select **OK F1**.
5. In the Immediate Backup window, select **OK F1** to begin the backup.

   NOTE You cannot run an immediate backup while a scheduled backup is running.
6. When the backup is complete, the system displays a message to notify you if the backup succeeded, failed, or was cancelled. If the backup failed or was cancelled, select **OK F1** to close the message window.
   - If the backup failed or was cancelled, repeat this procedure. If the backup fails or is cancelled again, contact Beckman Coulter Technical Support. (If you are backing up to a USB flash drive, this is the end of the procedure. If you are backing up to a tape drive, continue to Step 7.)
7. When the backup has successfully run, select **Eject F3**. The system rewinds the tape.
8. Select **OK** and replace the tape with another tape for the next scheduled backup.
9. Label the tape according to laboratory policy. At a minimum, mark the tape with the backup date and time and the system ID.
10. Store the tape in a safe place.

Shake the DxI Solid Waste Container

Perform this procedure at the DxI instrument. As the DxI processes samples, waste accumulates in the solid waste container in a conical pattern. If the accumulated waste grows too high, it may obstruct the waste chute. To prevent this from occurring, use this procedure to shake down the container each day.

The system may be in any mode.

⚠ WARNING

This procedure may expose you to potentially infectious materials. Handle and dispose of biohazard materials according to proper laboratory procedures. Use proper hand, eye and facial protection.

IMPORTANT Do not press the green reset button after shaking down the solid waste container. Pressing the green button resets the solid waste indicators. An inaccurate solid waste count could cause solid waste to overflow the container or obstruct the waste chute.

⚠ CAUTION

Do not open the solid waste door while either clean routine is in progress. Opening the solid waste door will cancel the routine and the system will enter the Not Ready mode.

1. Open the solid waste door by pulling down on the handle.
2. Grasp the solid waste container and shake gently until the accumulated waste is distributed evenly in the container.
3. Close the solid waste door.
4. Record all maintenance in the Electronic Scheduled Maintenance Log.

Run DxI Clean Routine

Perform this procedure at the DxI console and instrument.

Clean routines keep the sample, reagent, and aspirate probes clean and working properly. Run one of two clean routines each day as a part of daily maintenance.

Use this procedure to run a clean routine. Once you prepare and load the rack, it takes approximately ten minutes to complete the Daily Clean System routine, and approximately thirteen minutes to complete the Special Clean routine.

⚠ CAUTION

Do not open the solid waste door while either clean routine is in progress. Opening the solid waste door will cancel the routine and the system will enter the Not Ready mode.

NOTE You can load patient sample racks while a clean routine is in progress. Samples are aspirated after the clean routine rack is aspirated, and are held in sample storage until the clean routine is complete.

Required Materials

- Sample containers that hold at least 4 mL of solution
- Sample rack with the appropriate rack ID for the container used
- UniCel DxI wash buffer
- Contrad 70* cleaning solution
- 1:5 dilution of Citranox† cleaning solution - mix 1 part Citranox and 4 parts deionized water
- 70% ethanol solution - mix 7 parts of 95% ethanol and 3 parts wash buffer (alternatively, you can substitute methanol for the 95% ethanol). (Special Clean routine only)

The system must be in *Ready* mode.

⚠ WARNING

- **This procedure may expose you to potentially infectious materials. Handle and dispose of biohazard materials according to proper laboratory procedures. Use proper hand, eye and facial protection.**
- **Citranox cleaning solution is acidic and may cause eye or skin irritation. Handle according to proper laboratory procedures. See the manufacturer's label for details.**
- **Contrad 70 cleaning solution is alkaline and may cause severe eye irritation or mild skin irritation. Handle according to proper laboratory procedures. See the manufacturer's label for details.**
- **Ethanol and methanol are extremely flammable. Do not use near heat or flame. Do not ingest. Avoid contact with eyes, skin, and clothing. Use with adequate ventilation.**

* Contrad is a registered trademark of Decon Laboratories, Inc.

† Citranox is a registered trademark of Alconox, Inc.

⚠ CAUTION

Racks are configured to accept only one type of sample container. The sample containers used must match the ID configured for the rack. An incorrect sample container in a rack may damage the system. You can find the rack ID ranges set up for each sample container from the Reserved Rack Setup function in System Setup on the workstation console.

1 Confirm that the Utility routine is enabled. If the routine is not enabled, enable the routine and Prime the Fluidics before you continue.

2 To begin the procedure:

- From the Main Menu, select **Sample Manager F1**.
- Select **New Request F3**.
- Select **Maintenance F3** to display the Request Maintenance screen.

3 Select either the **Daily Clean System** or the **Special Clean** option.

NOTE Run the Special Clean routine if your laboratory has run the Vitamin B_{12} assay during the last 24-hour time period. Otherwise, run the Daily Clean System routine.

4 Select **OK F1** to display the Maintenance Requests screen. The screen displays the sample containers and contents for the selected routine.

5 Type the rack ID in the **Enter ID** field and press (Enter).

6 Place empty sample containers in positions 1 and 2 of an appropriate rack. If you are running the Special Clean routine, place an empty sample container in position 3 of the rack as well.

⚠ WARNING

In the following steps, you will pipette solutions that may cause eye or skin irritation. Handle according to proper laboratory procedures.

7 Pipette 3 mL of Contrad 70* cleaning solution into the sample container in position 1.

8 Pipette 3 mL of a 1:5 dilution of Citranox cleaning solution into the sample container in position 2.

* Citranox is a registered trademark of Alconox, Inc.

WARNING

Ethanol and methanol are extremely flammable. Do not fill sample tubes on the instrument or in a rack positioned in the sample presentation unit. Remove sample tubes from the instrument immediately after completing the Special Clean routine.

9 If you are running the Special Clean routine, pipette 4 mL of a 70% ethanol or methanol solution into the sample container in position 3.

10 Exit the Maintenance Requests screen.

11 Load the rack into the DxI SPU (Sample Presentation Unit).

12 Record all maintenance in the Electronic Scheduled Maintenance Log. You can record the type of clean routine (Daily or Special) in the Action Log.

Prime the Fluidics

IMPORTANT The Prime Fluidics procedure is only required if the Utility routine is not enabled. If the Utility routine is not enabled, then enable the routine and Prime the Fluidics.

Perform this procedure at the DxI console and instrument.

Use this procedure to prime one or more of the pipettors, the dispense probes, the aspirate probe or the substrate fluidic lines.

The system must be in *Ready* mode.

1 From the Diagnostics menu, select **Prime Fluidics F2** to display the Prime Fluidics screen.

2 Select one or more of the components you want to prime.

- To prime all components, select **Select All F3**.
- Select the **Substrate in use** check box to fill the fluidic line with substrate from the active substrate bottle through various fluidic components to the substrate probe. If you select the **Substrate in use** check box, you can also calibrate the drawback.

  NOTE Do not select the **Calibrate Drawback** check box unless you are directed to do so by a Beckman Coulter Technical Support Representative or by the system documentation.

- Select the **Sample Pipettor** check box to fill the fluidic line with wash buffer from the wash buffer reservoir through various fluidic components to the sample probe.

- Select the **Aspirate 1 & Dispense Probes** check box to fill the fluidic lines with wash buffer from the wash buffer reservoir through various fluidic components to the first aspirate probe.
- Select one or more **Reagent Pipettor** check boxes to fill the fluidic lines with wash buffer from the wash buffer reservoir through various fluidic components to the three dispense probes and the selected reagent pipettors.
- Select the **Wash Buffer Bubble Detector** box to flush wash buffer past the wash buffer flow sensor. This selection is only available if your system is equipped with a wash buffer flow sensor.

NOTE Before priming the wash buffer flow sensor, make sure that the system has sufficient wash buffer. Priming will fail if either container is low on fluid.

3 For each component to be primed, confirm or change the default number of cycles displayed. Change the default number of cycles only as instructed by a Beckman Coulter Technical Support Representative or by a procedure you are following in the system documentation. To change the number of cycles for a component, select the **Cycles Requested** field across from that component and type the number.

4 (Optional) Only as directed by a Beckman Coulter Technical Support Representative or by the system documentation, select **Disable Process Monitoring**. This option is typically used only when a Beckman Coulter Technical Support Representative installs the Integrated Workstation and primes the dry fluidic lines.

5 Select **Start Priming F2**.

The system primes the selected components and displays messages about the progress of the procedure. When priming is complete, the system displays a confirmation message.

6 Select **OK F1** to return to the Prime Fluidics screen.

7 (Optional) Select **Monitoring Statistics F5** to view substrate priming information.

8 Select **Done F1** to return to the Main Menu.

Twice Weekly Maintenance

Clean Flow Cell (Automated)

NOTE If you are doing the weekly procedure, see Clean Flow Cell, Cups and CC Probes/Mixers (Automated). This procedure takes approximately 37 minutes to complete.

Introduction

Clean the Flow Cell twice weekly. The system flags this procedure DUE on a 4 day/3 day cycle. At the end of this cycle (on the 7th day, the weekly interval), clean the MC cups and the probes/mixers also. Follow the weekly procedure, Clean Flow Cell, Cups and CC Probes/Mixers (Automated) at this time.

Regular cleaning prevents sample, reagent, or system and hardware errors. You can reduce erratic chemistry errors such as drift and noise, or chemistry performance issues such as imprecision when you keep a regular cleaning schedule.

IMPORTANT If the system displays an error during this procedure, press the DxC **Stop** button immediately. Home the DxC system, then check that 2 mL cups are present on the sample rack, and that they contain adequate cleaning solution. Repeat the procedure.

Required Materials:

- Diluted Clenz Solution (PN 664090) freshly prepared. Add 4 drops of Clenz Solution to an empty 2 mL sample cup, fill to 2 mL line with 0.9% saline (NaCl) (PN A93901). (Do not use buffered or pH adjusted 0.9% NaCl.) Mix.
- 2 mL sample cup of 0.9% saline (NaCl) (PN A93901). (Do not use buffered or pH adjusted 0.9% NaCl.)
- 2 mL sample cup with 2 mL of Sodium Hypochlorite 5% (PN A32319). (Do not substitute “household” bleach products that may contain thickeners or sodium hydroxide.)
- 2 mL sample cup with 2 mL of serum

---

1 Select **Utils** from the menu bar.

---

2 Select **2 Maintenance**.

---

3 Select **10 Clean Flow Cell, Cups & CC Probes/Mixers**.

NOTE This selection always cleans the Flow Cell. You do not need to make any selections on this screen to complete this procedure.

---

4 Follow the instructions on the ISE/MC Rack 1 tab.

5 Select **Close** to exit the Result window after cleaning is completed.

6 The system displays the electronic maintenance log. Select the **Initial and Date** check box for the **Clean Flow Cell** procedure under the Weekly maintenance tab, and select the **Initial and Date** button.

Weekly Maintenance

- Check Reagent Levels
- Replace Cuvette Wiper
- Clean ALBm & TPm Cup Modules (DxC 800 only)
- Clean Probes (Exterior)
- Clean Flow Cell (12-15)(Twice weekly) Clean Cups (12-22)
- CC Probe Cleaning (12-22)
- Check Chloride Calibration Span
- Install Clean DxI Aspirate Probes (HIV antibody levels only)
- Check Syringe Tightness

Check Reagent Levels

Check the levels of three DxC MC reagents: Wash Concentrate II, No Foam and CTS Auto-Gloss.

1 Select **Rgts/Cal** from the menu bar, then select the DxC tab.

2 Select the **Down Arrow** to review the second page screen.

3 Open the middle door of the DxC to access the MC reagents.

NOTE The CTS Auto-Gloss bottle is in a bracket on the inside of the middle door.

4 Examine the reagent levels in the bottles and compare them with the percentages on the screen (**Wash, No Foam** and **Auto-Gloss**).

5 If the volume shown does not match the actual reagent volume, enter the correct volume for each reagent in the **Vol** field.

NOTE A pop-up message appears when approximately 10%, 5%, and 0% of an MC reagent remains.

6 If necessary, load a new bottle of reagent. See Load/Unload Reagent.

Be careful when handling the bottle of CTS Auto-Gloss or No Foam. Prevent spills. These solutions are extremely slippery and difficult to clean from the floor.

7 Close the middle door.

Replace Cuvette Wiper

Constant use can damage and tear the DxC cuvette wiper. Change the cuvette wiper weekly or as needed to keep the cuvettes clean.

1 Remove the cuvette wash station cover on the DxC instrument. Pull up the two locking pins (1). Move the sample probe and mixer aside, and lift the cover out.

Figure 12.3 Cuvette Wash Station Cover

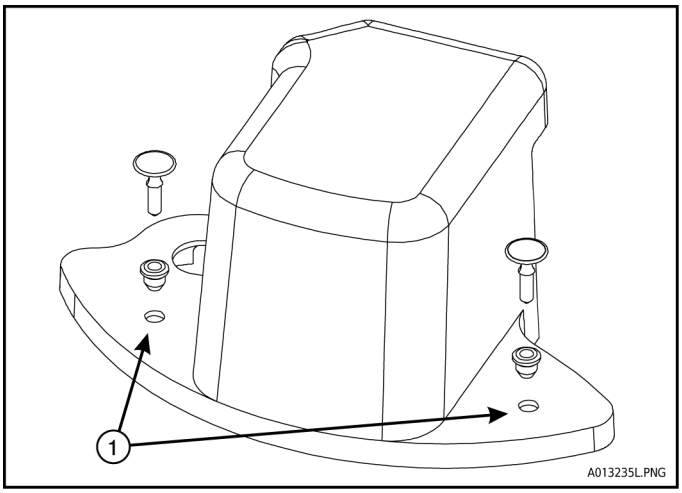

1. Locking Pins

2 Loosen the two thumbscrews (1) on each side of the cuvette washer. Remove the upper section of the cuvette wash assembly. Remove the silicone wiper.

Figure 12.4 Cuvette Wash Station Thumbscrews

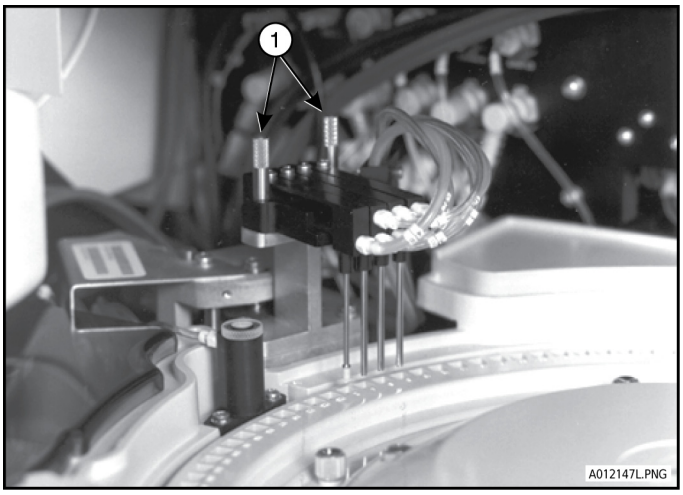

1. Thumbscrews

3 Slide the new wiper (1) onto the bottom of the probe until the under surface of the wiper is flush with the end of the probe.

Figure 12.5 Cuvette Wash Station Probe

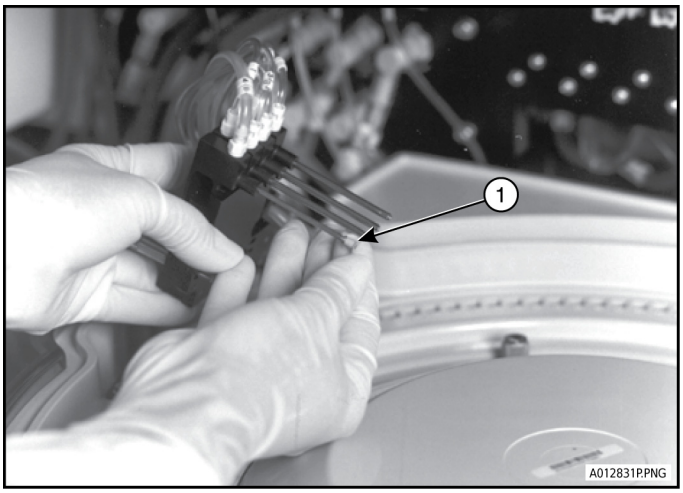

1. Wiper

NOTE The under surface of the wiper must be flush with the end of the washer probe.

4 Replace the upper section of the cuvette wash assembly and align the wash station pins and thumbscrews. Tighten the thumbscrews finger-tight.

- Hold wash assembly flush to the mounting surface as you tighten the thumbscrews.
- Square the wiper tip to the cuvette.
- Properly position the wash tower probes to prevent errors.

5 Replace the cuvette wash station cover.

Clean ALBm & TPm Cup Modules (DxC 800 only)

Clean the DxC Albumin and Total Protein MC reaction cups and stir bars weekly, or more frequently if the chemistry does not calibrate, or when chemistry performance shows imprecision and unexpected results.

NOTE This procedure is also included with the other modular chemistries in Monthly maintenance.

IMPORTANT The system must be in *Standby* in order to access the *Maintenance* mode.

Required Materials

Prepare at least 1 mL each of two solutions:

- For Total Protein cup: 1N HCl - mix 1 part 6N HCl and 5 parts deionized water.
- For Albumin cup: 10% cleaning solution - mix 1 part Wash Concentrate II and 9 parts deionized water.

1 To begin cup maintenance:

Select:

- **Utils** from the menu bar
- **2 Maintenance**
- **4 Cup Maintenance**
- **Total Protein** and **Albumin**.

2 Select **Rinse**.

The system drains and rinses the cups five times with water.

When the rinse procedure is complete, the system displays the Result Window. DO NOT select **Close** to exit the window at this time.

3 When the pop-up window appears, use a transfer pipette to manually add:

- One mL of 1N HCl solution to the Total Protein cup.
- One mL of 10% Cleaning solution to the Albumin cup.

4 Let the cleaning solution sit in the cups for 10 minutes. The stir bars will continue to mix during this time.

5 When 10 minutes have passed, select **Close** to exit the Result Window.

6 Select **Rinse**.

The system drains and rinses the cups five times with water.

7 When the rinse is complete, select **Close** to exit the Result Window, then select **Drain**.

8 When the drain is complete, select **OK** to continue. The system primes the cups.

9 When action is complete, select **Close** to exit the Result Window, and select **Cancel** to return to the Maintenance menu.

10 Calibrate Total Protein and Albumin chemistries and run QC materials.

IMPORTANT It is not necessary to perform the ALBm and TPm lamp calibration following the weekly maintenance.

Clean Probes (Exterior)

Clean the exterior of the sample, wash station, and reagent probes on the DxC weekly.

⚠ CAUTION

To prevent damage due to electrical static discharge (ESD), wear the wrist ground strap when you perform this procedure. For further instructions, refer to Basic Laboratory Practice in the beginning of this chapter.

1 Press the **STOP** button on the DxC to place the system into *Stopped* state.

The probes are ready for manual maintenance when DxC system status changes to *Stopped*.

2 Clean the outside and bottom of any visible parts of the sample and reagent probes, and all of the cuvette wash station probes. Use a lint-free tissue moistened with 70% isopropyl alcohol or a 70% isopropyl alcohol pad. Do not use gauze, since it can snag the tip and damage the sample and reagent probes.

NOTE Use a separate pad for each probe.

3 Remove the reaction carousel cover to access the lower portions of the CC reagent probes (under the attached wash collars).

- Move the reagent probes from the home position to the maintenance indentation (1) by grasping the wash collar (2).
- From the fitting at the top, press the probe down into the indentation.
- Clean the visible part of the probe below the wash collar.
- Carefully raise the probe back into the wash collar, and allow the probe to return to the home position.

Figure 12.6 CC Reagent Probe Assembly

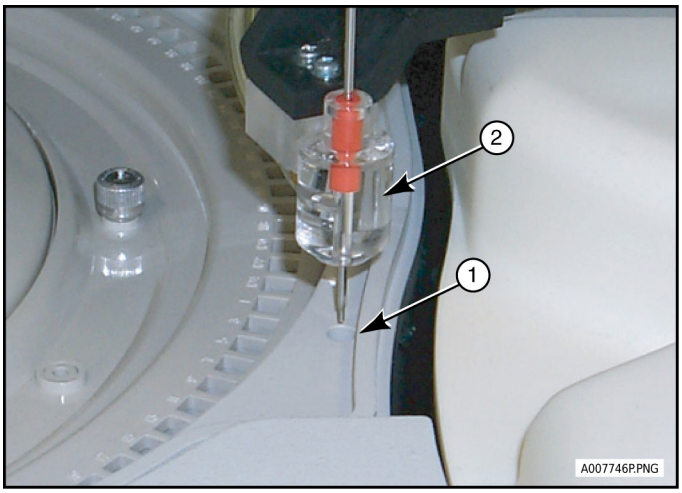

1. Maintenance Indentation **2.** Wash Collar

4 To access the lower portions of the MC and CC sample probes (under the attached wash collars) remove the sample carousel cover.

- Move the sample probes to a clear space between the sample carousel and the sample carousel tub (1).
- Press the probe down into the clear area.
- Clean the visible part of the probe below the wash collar.

Figure 12.7 CC Sample Probe Assembly

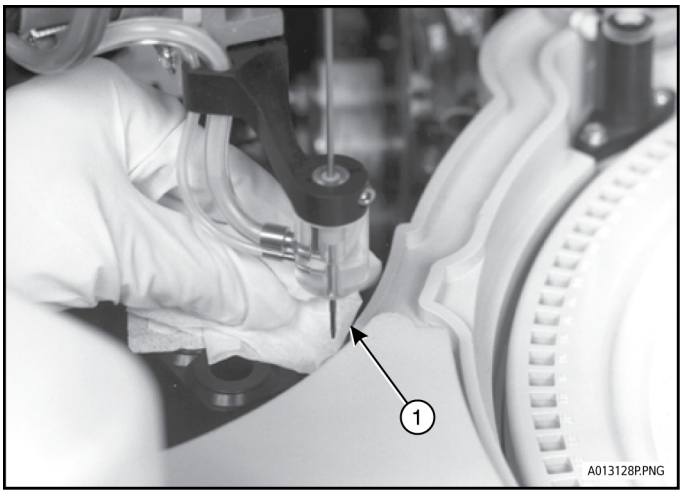

1. Sample Carousel Tub

5 When all maintenance steps are complete, install covers.

Select:

- **OK** to clear the pop-up message
- **Instr Cmd** from the menu bar
- **1 Home**
- **1 DxC** on the pop-up message that appears.

Clean Flow Cell, Cups and CC Probes/Mixers (Automated)

Introduction

Clean the Flow Cell twice weekly. The system flags this procedure DUE on a 4 day/3 day cycle. At the end of this cycle (on the 7th day, the weekly interval), you must also clean the MC cups and the probes/mixers.

To clean only the flow cell, follow the Clean Flow Cell (Automated) procedure. To clean the MC and CC sample probes, selected cup modules, reagent probes, and mixers along with the flow cell at the weekly interval, follow the procedure below. You can also optionally select to clean the CC cuvettes, on an as-needed basis.

Regular cleaning prevents sample, reagent, or system and hardware errors. You can reduce erratic chemistry errors such as drift and noise, or chemistry performance issues such as imprecision when you keep a regular cleaning schedule.

IMPORTANT If the system displays an error during this procedure, press the DxC **Stop** button immediately. Home the DxC system, then check that 2 mL cups are present on the sample rack, and that they contain adequate cleaning solution. Repeat the procedure.

Required Materials:

- Two 2 mL sample cups of diluted Clenz Solution (PN 664090) freshly prepared. Add 4 drops of Clenz Solution to each empty 2 mL sample cup, fill to 2 mL line with 0.9% saline (NaCl) (PN A93901). (Do not use buffered or pH adjusted 0.9% NaCl.) Mix.
- Two 2 mL sample cups of 0.9% saline (NaCl) (PN A93901). (Do not use buffered or pH adjusted 0.9% NaCl.)
- 2 mL sample cup with 2 mL of Sodium Hypochlorite 5% (PN A32319). (Do not substitute "household" bleach products that may contain thickeners or sodium hydroxide.)
- 2 mL sample cup with 2 mL of serum
- CCWA (Cartridge Chemistry Wash Solution) cartridge (PN 657133). When you clean the probes/mixers, the CCWA must have at least 25 tests available. If you also clean the cuvettes, the CCWA must have 65 tests available.

1 Load the CCWA cartridge on the DxC. See Load/Unload Cartridge Chemistries (CC).

2 Select **Utils** from the menu bar.

3 Select **2 Maintenance**.

4 Select **10 Clean Flow Cell, Cups & CC Probes/Mixers**.

5 Select all the MC cup buttons and the **CC Probes/Mixers** button. Follow the instructions on the ISE/MC Rack 1 tab, then select the CC Rack 2 tab and follow the instructions on it. You must prepare 2 racks of solutions.

NOTE You can optionally select CC cuvettes in order to clean them on an as-needed basis. When you select CC Cuvettes, the system also selects CC Probes/Mixers. All components except the flow cell can be deselected if you don't want to clean them. The flow cell is always cleaned automatically.

6 Select **Close** to exit the Result window after cleaning is completed.

7 The system displays the electronic maintenance log. Select the **Initial and Date** check box for the **Clean Flow Cell,** the **Clean Cups**, and the **CC Probe Cleaning** procedures under the Weekly maintenance tab, and select the **Initial and Date** button.

If you cleaned the CC cuvettes, record the maintenance in the Action Log.

Check Chloride Calibration Span

The system automatically monitors the CL span with each calibration. If the span falls below 2100, the system highlights the **Check Chloride Calibration Span** task in the Weekly tab of the Electronic Maintenance Log. When the task is highlighted, either Replace the Chloride Electrode Tip or Clean Chloride Electrode Tip and Flow Cell Port as soon as convenient. (Calibration will fail if the span falls below 2000.)

To check the chloride calibration span manually:

1. During the daily calibration routine, the AQUA CAL 2 Calibration Report is automatically printed. If necessary, reprint this report. See Reprint Current Calibration Reports.

2. Refer to page 2 of the calibration report. Check the CL span value at the bottom of the page. If the value is <2100, either Replace the Chloride Electrode Tip or Clean Chloride Electrode Tip and Flow Cell Port when it is convenient to your work load.

Check Syringe Tightness

⚠ CAUTION

To prevent damage due to electrical static discharge (ESD), wear a wrist ground strap when you perform this procedure. For further instructions, refer to Basic Laboratory Practice at the beginning of the Maintenance chapter.

Prepare for Maintenance Mode

IMPORTANT The system status must be in *Standby* to access *Maintenance* mode.

1. Select:
   - **Utils** from the menu bar
   - **2 Maintenance**
   - **7 Syringe Maintenance**

2. Grasp the syringe at the plunger guide (2), and check for syringe to T-valve (1) tightness by hand tightening. Grasp the syringe button (3) and check for syringe button to adapter (4) tightness by hand tightening. Refer to Figure 12.8.

Figure 12.8 CC Reagent Syringe (500 µL)

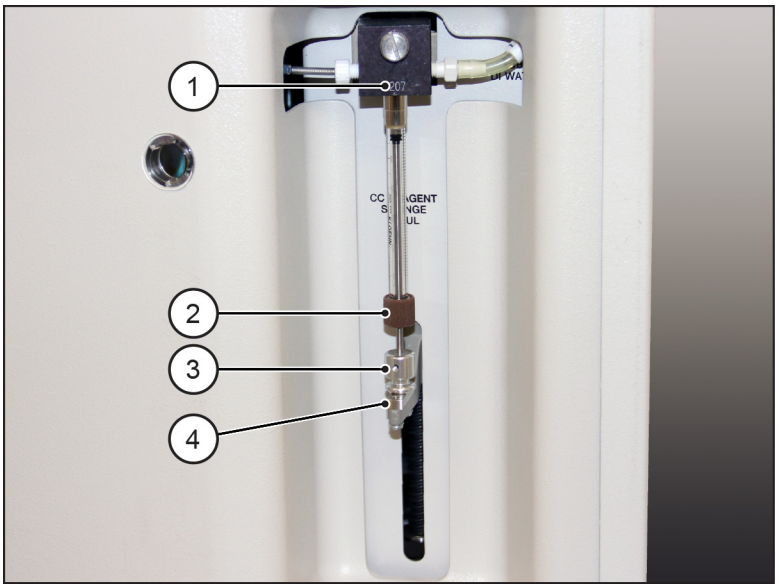

1. T-valve
2. Plunger Guide
3. Syringe Button
4. Adapter

3 Repeat Step 2 for the remaining syringes. Check all syringes.

4 Select **Cancel** to return to the Maintenance menu.

Install Clean DxI Aspirate Probes

If your laboratory runs tests for HIV antibody levels, this procedure appears on the Weekly maintenance tab, and you must perform this procedure weekly. In all laboratories this procedure appears on the Other maintenance tab, to be performed during the 10,000 test interval maintenance. See Install Clean DxI Aspirate Probes in the 10,000 Test Interval Maintenance section.

Twice Monthly Maintenance

- Clean the UCTA Aliquot and Piercer Probes

Clean the UCTA Aliquot and Piercer Probes

IMPORTANT If your system processes Sarstedt* tubes, increase the frequency of this procedure from twice monthly to daily. Record completion daily in the Scheduled Maintenance Log. (The procedure is still located under the 2x Month tab.) If your system does not process Sarstedt tubes, continue to follow the twice monthly schedule.

Materials Required:

- Fiber-free polyester swabs
- Wash Buffer II

⚠ CAUTION

The UCTA Piercer Probe tips are extremely sharp and have been exposed to potentially biohazardous fluids. To prevent injury or exposure, avoid the piercer tips. Use caution when you clean the UCTA Piercer Probes.

Figure 12.9 UniCel Closed Tube Aliquotter

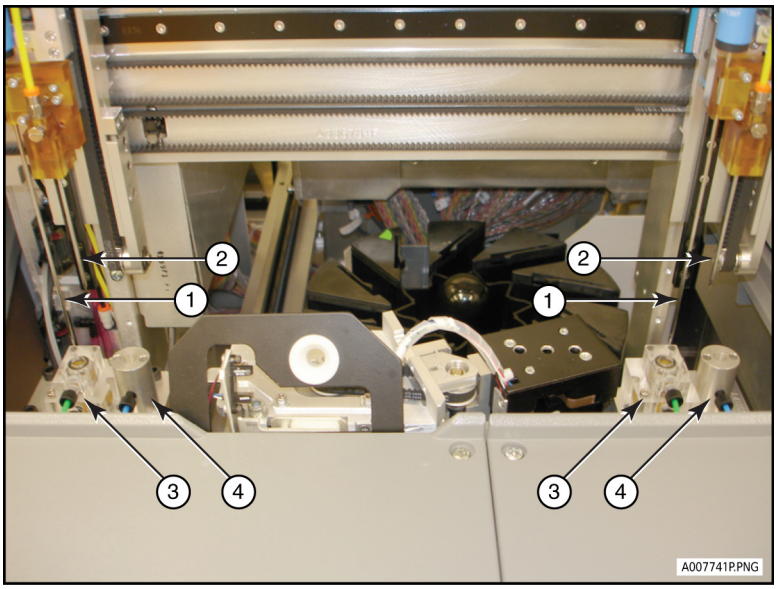

1. UCTA Aliquot Probes
2. UCTA Piercer Probes
3. UCTA Probe Wash Stations
4. UCTA Auto-Gloss Dispense Stations

* Registered trademark of the Sarstedt Corporation.

1. The UCTA must be in *Standby* status. Lift the UCTA canopy.
2. Clean the UCTA Aliquot Probes (1) with swabs moistened with Wash Buffer.
3. Clean the UCTA Piercer Probes (2) with swabs moistened with Wash Buffer.
4. Discard the swabs in a biohazard container and close the UCTA canopy.

Monthly Maintenance

- Replace Alkaline Buffer
- Adjust the Fluid Level of the Alkaline Buffer Damper Assembly
- Clean All Cup Modules
- Clean Mixers
- Calibrate Lamps and Sensor
- BUNm/UREAm Electrode Maintenance (DxC 800 Only)
- Replace CTS Blade (1-Blade Narrow CTS Option) (monthly or 15,000 cuts)
- Clean Chloride Electrode Tip and Flow Cell Port

Replace Alkaline Buffer

The following procedure describes how to replace the Alkaline Buffer reagent and the in-line filter.

Materials Required:

- Alkaline Buffer
- ISE in-line filter
- Lint-free tissue

1. Loosen the two Phillips screws on the ISE module cover and remove the cover.
2. Release the locking pin (1) on the ISE module and lift the module until it clicks into a raised, locked position. The locking pin is located on the left side of the ISE module.

Figure 12.10 ISE Module

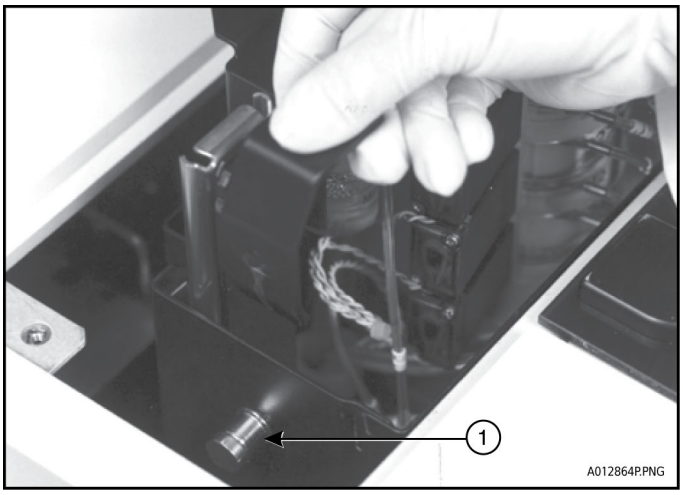

1. Locking Pin

3 Unscrew and remove the bottle cap from the alkaline buffer reagent. Hold the cap with attached straw over a container that catches the residual fluid from the alkaline buffer return line #33.

4 Prime the line 10 times.

- Select:
  - **Utils** from the menu bar
  - **1 Prime**
  - **MC F4**
  - **ISE CO_2 Alkaline Buffer**.
- Type **10** in the **Number of primes to repeat** field.
- Select **Start Prime**. Reagent line is drained of old reagent.

5 Remove reagent input line #30 (1) (line draining into damper) from the in-line filter.

Figure 12.11 Reagent Input Line #30

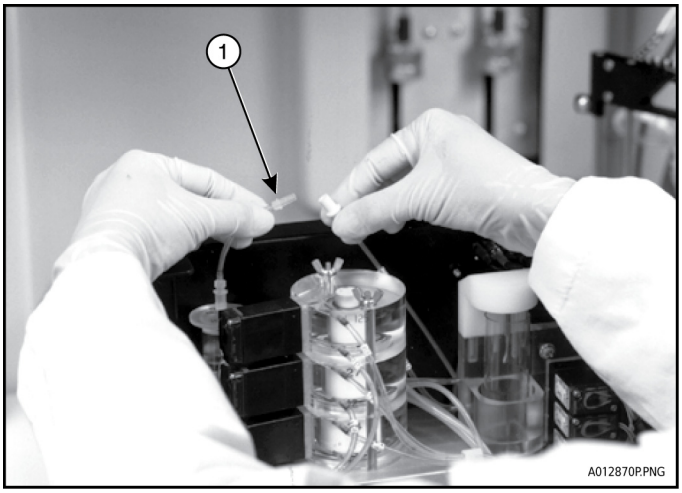

1. Reagent Input Line #30

6 Twist off the in-line filter (PN 669212) from the input line.

7 Attach the new in-line filter to the input line. Be sure the arrow on the filter points toward the damper.

8 Reattach reagent input line #30 (that flows into damper).

9 Place a fresh bottle of alkaline buffer on the system. Wipe reagent straw with lint-free tissue and replace bottle cap onto the new reagent bottle.

Figure 12.12 Alkaline Buffer

10 Load reagent information. Select:

- **Rgts/Cal**
- DxC tab
- **MC Rgts**
- **Load F1**

Use the hand-held bar code scanner to scan the bar code.

11 Select **Done**.

12 While priming with the alkaline buffer reagent, check the peri-pump tubing and line for leaks or other problems. Correct as needed.

13 Adjust the Fluid Level of the Alkaline Buffer Damper Assembly.

⚠ CAUTION

Pinch hazard. Keep fingers clear of the ISE module as you lower it.

14 Lower the ISE module by releasing the locking pin. Be careful NOT to pinch tubing as the module is lowered.

15 Reinstall the ISE module cover.

16 Calibrate all ISE chemistries.

Adjust the Fluid Level of the Alkaline Buffer Damper Assembly

1 Visually inspect the damper to verify that the fluid level rests between the MIN and MAX lines, approximately one-third to one-half full.

If the fluid level is below the MIN line, proceed to Step 2.

If fluid level is above the MAX line, go to Step 9.

2 Remove the alkaline damper (1) from the holding clip and place the damper in a horizontal position.

Figure 12.13 Alkaline Damper

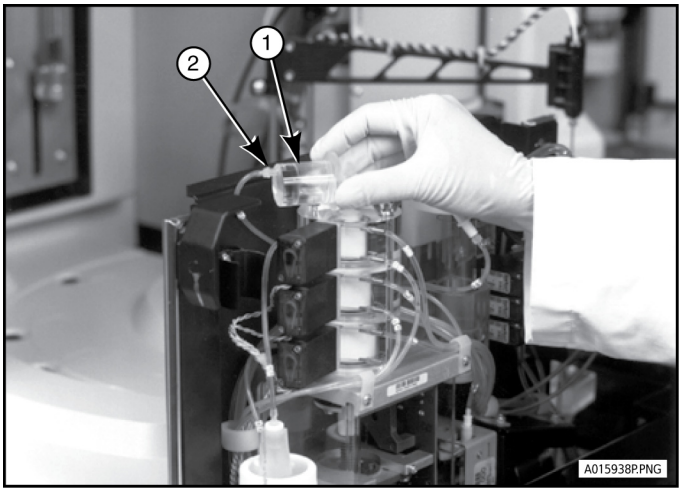

1. Alkaline Damper **2.** Output Line #29

NOTE The damper should be positioned so that the output line #29 (2) Figure 12.13, leading from the damper to the alkaline buffer, is oriented on top.

3 Prime alkaline buffer five times or as many times as necessary to fill the damper one-half full. Access alkaline buffer priming.

- Select:
  - **Utils** from the menu bar
  - **1 Prime**
  - **MC F4**
  - **ISE CO_2 Alkaline Buffer**.
- Type **5** in the **Number of primes to repeat** field.
- Select **Start Prime**. (Prime cycles are completed when *Standby* appears in the system status.)

4 Observe the fluid level during prime cycles. As the damper becomes half full, turn the damper to the upright position.

5 Wipe dry any reagent spill on the damper assembly.

6 Clip the damper assembly back into the upright position.

⚠ CAUTION

Pinch hazard. Keep fingers clear of the ISE module as you lower it.

7 Lower the ISE module by releasing the locking pin. Be careful NOT to pinch tubing as the module is lowered.

8 Reinstall the ISE module cover.

9 **If the fluid level is above the MAX line:**

Remove input line #30 (1) feeding into the damper.

- Using a clean transfer pipette, remove excess reagent until damper is one-half full. Discard the removed fluid.
- Reconnect input line #30 to the damper, wipe dry any reagent spill on the damper top.

Figure 12.14 Alkaline Damper

1. Input Line #30

10 Prime the alkaline buffer three times.

- Select:
  - **Utils** from the menu bar
  - **1 Prime**
  - **MC F4**
  - **ISE CO_2 Alkaline Buffer.**
- Type **3** in the **Number of primes to repeat** field.
- Select **Start Prime.** (Prime cycles are completed when *Standby* appears in the system status.)

⚠ CAUTION

Pinch hazard. Keep fingers clear of the ISE module as you lower it.

11 Lower the ISE module by releasing the locking pin. Be careful NOT to pinch tubing as the module is lowered.

12 Reinstall the ISE module cover.

Clean All Cup Modules

Albumin, Urea Nitrogen, Glucose, Phosphorus, Creatinine, and Total Protein cup modules need to be cleaned monthly. Prepare the cup modules for cleaning as follows:

Table 12.1 Cup Cleaning Preparation

MC Module	Prepare	By Diluting
ALBm[a], BUNm/UREAm[a], GLUCm[a,b], PHOSm[a]	10% cleaning solution	One part Wash Concentrate II with nine parts deionized water.
CREm[a], TPm[a]	1N HCL	One part 6N HCL with five parts deionized water.

a. The DxC 800 contains ALBm, BUNm/UREAm, GLUCm, PHOSm, CREm and TPm cup modules.
b. The DxC 600 includes only the GLUCm cup module.

The following procedure can be applied to all modular chemistry cups. Where applicable, the procedure lists instructions specific for a particular cup. It is important to follow any special case instructions. It is recommended to prepare all requested cups for maintenance at the same time.

1 Select:

- **Utils** from the menu bar
- **2 Maintenance**
- **4 Cup Maintenance**
- Appropriate chemistries.

2 Select **Rinse**. The cups are drained and rinsed 5 times with water.

IMPORTANT To prevent damage to either the BUNm/UREAm electrode or GLUCm* sensor, do not insert transfer pipette or any other object down into the bottom of the cup. It is not required to remove the stir bars from any cup during this cleaning procedure.

3 When rinsing is complete, the system displays an informational window. Do not close the window. Use a transfer pipette to manually add:

- One mL of 10% cleaning solution to each of the cups, BUNm/UREAm, GLUCm*, PHOSm, and ALBm.
- One mL of 1N HCl solution to each of the cups, TPm, and CREm.

4 Let the cleaning solutions sit in the cups for 10 minutes. The stir bars continue to stir during this time.

* The DxC 600 includes only the GLUCm cup module.

5 At the end of the 10 minute waiting period, select **Close** to exit the Result Window.

6 Select **Rinse**. The cups are drained and rinsed 5 times with water.

7 When rinsing is complete, select **Close** to exit the Result Window.

8 Select **Drain**.

9 When draining is complete:

- Select **OK** in the Maintenance Confirmation window.
- Select **Close** when priming is complete to exit the Result Window.
- Select **Cancel** to return to the Maintenance screen.

Clean Mixers

Wipe the mixers monthly to clean any buildup or discoloration that may accumulate over time.

⚠ CAUTION

To prevent damage due to electrical static discharge (ESD), wear the wrist ground strap when you perform this procedure. For further instructions, refer to Basic Laboratory Practice in the beginning of this chapter.

Gently but thoroughly wipe the outside of both mixers (1) and (2) of Figure 12.15 using 70% isopropyl alcohol and lint-free tissue or with a 70% isopropyl alcohol pad. Do not use gauze, since it can snag the tip and damage the Mixer Paddle. Inspect mixers for scratches or nicks and replace if necessary. Follow the Sample and Reagent Mixer Paddle procedure as described in the UniCel DxC Synchron Clinical Systems *Reference Manual*, CHAPTER 4, *User Servicing*.

Figure 12.15 CC Sample and Reagent Mixers

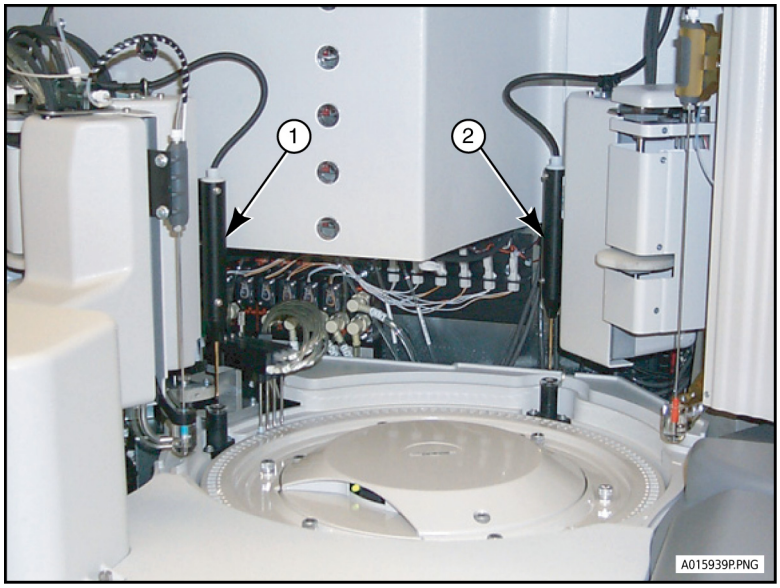

1. CC Sample Mixer
2. CC Reagent Mixer

Calibrate Lamps and Sensor

Calibrate lamps and/or sensor following monthly cup maintenance, sensor replacement, or any adjustment made to the module.

IMPORTANT The system does not autoprime in *Maintenance* mode. After completing the maintenance procedure, or if a procedure is aborted, exit the Maintenance menu to resume autoprime and return the system to *Standby*.

---

1 Select **Utils** from the menu bar.

---

2 Select **2 Maintenance**.

---

3 Select **8 CUPs Lamp/Sensor Calibration**.

---

4 To calibrate Albumin, Creatinine, Phosphorus, and Total Protein:

- Select the following Lamp Calibration check boxes:
  - ☑ **ALBm**
  - ☑ **TPm**
  - ☑ **CREm**
  - ☑ **PHOSm**

5 To calibrate the Glucose Sensor:

- Select the GLUCm check box:

  ☑ **GLUCm**

6 Select **Start**. The calibration process begins and continues for 5-7 minutes and ends with a pass/fail indication.

- If lamp or sensor calibration fails, repeat calibration and check to see that cups fill with water.
- If the cup is full and the calibration fails, the lamp or sensor may need to be replaced. Refer to Replace Glucose Sensor and the MC Lamp Replacement procedure in the UniCel DxC Synchron Clinical Systems *Reference Manual*.

7 Select **Close** to exit the Lamp/Sensor Calibration screen.

IMPORTANT Always calibrate a chemistry following a CUPs Lamp/Sensor Calibration.

BUNm/UREAm Electrode Maintenance (DxC 800 Only)

To prepare the MC cups for electrode maintenance or replacement, follow the steps below. Clean the BUNm/UREAm electrode monthly. Replace the BUNm/UREAm electrode as-needed only.

IMPORTANT The system does not autoprime in *Maintenance* mode. After completing a maintenance procedure, or if a procedure is aborted, exit the Maintenance menu to resume autoprime and return the system to *Standby*.

Materials Required:

- Phillips screwdriver
- Deionized water
- Lint-free tissue
- Silicone compound (P/N 879049)
- Mirror

1 Drain the reagent from the MC Cups. Select:

- **Utils** from the menu bar
- **2 Maintenance**
- **4 Cup Maintenance.**

2 Select **BUNm/UREAm**.

Select **Drain**. The system displays a Maintenance window when the cup is drained and ready for maintenance. Do not close the window.

3 Loosen the two Phillips screws on the ISE module cover and remove the cover.

4 Loosen the two screws (1) on the MC cover and gently remove the cover.

Figure 12.16 MC Cover

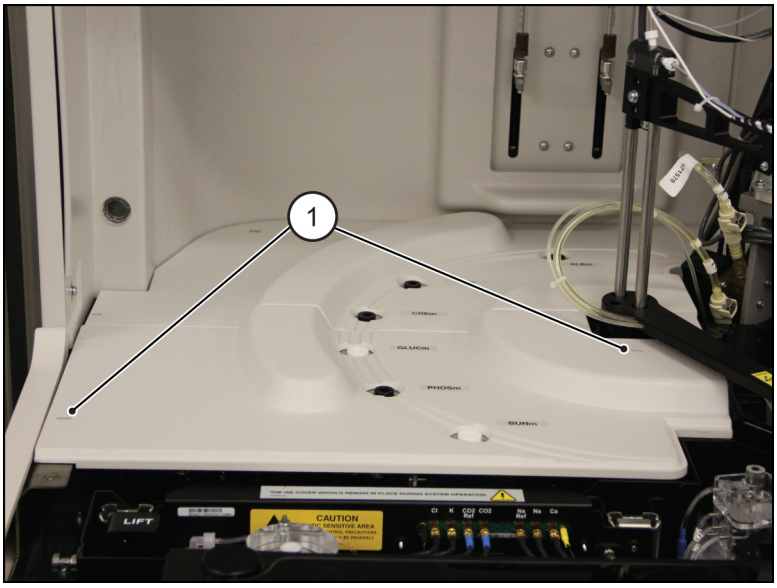

1. Screws

5 Press the latch, which is located on the connector (1), to disengage the electrode pin lead from the connector panel and remove the electrode connector from the socket.

Figure 12.17 BUNm/UREAm Connector Panel

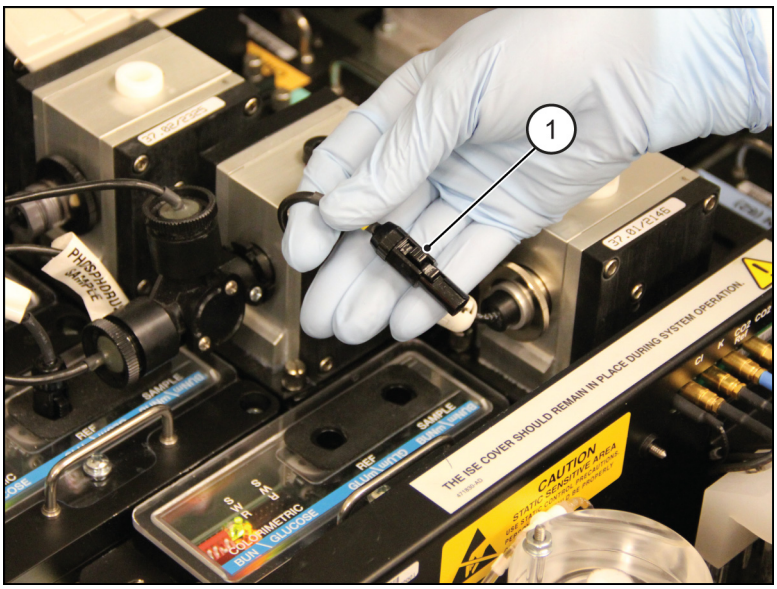

1. Connector

6 Unscrew the BUNm/UREAm electrode retainer nut (1) and withdraw the electrode-retainer assembly from the chemistry reaction cup.

NOTE Retainer may separate from electrode. It will be reassembled later.

Figure 12.18 Electrode Retainer Assembly

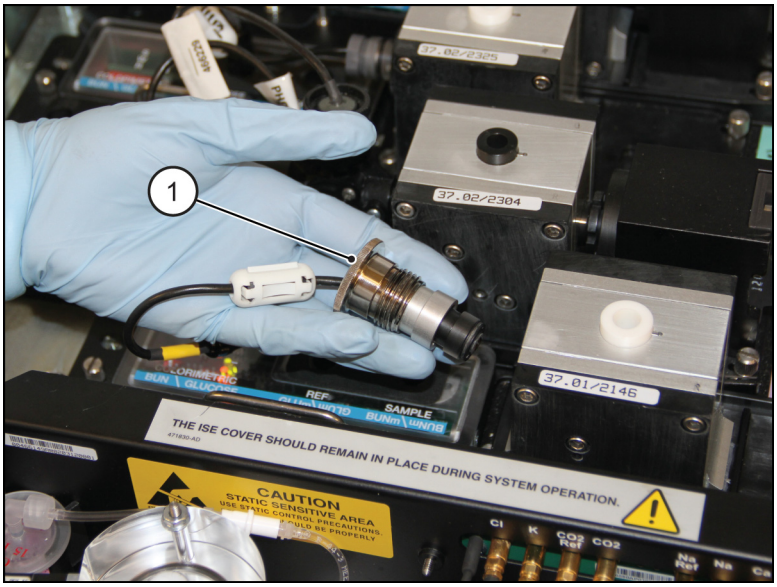

1. Electrode Retainer Nut

7 It is not required to clean the stir bar, however, the stir bar may be cleaned if desired while the BUNm electrode is removed from the cup. Refer to Four Month Maintenance, Clean the MC Reagent Lines section in this chapter.

⚠ CAUTION

Do not scratch the gold coating on the face of the electrode as excessive scratches may adversely affect performance.

8 Remove the quad-ring (4) from the front face of the electrode. Refer to Figure 12.19.

Figure 12.19 Electrode Retainer Assembly

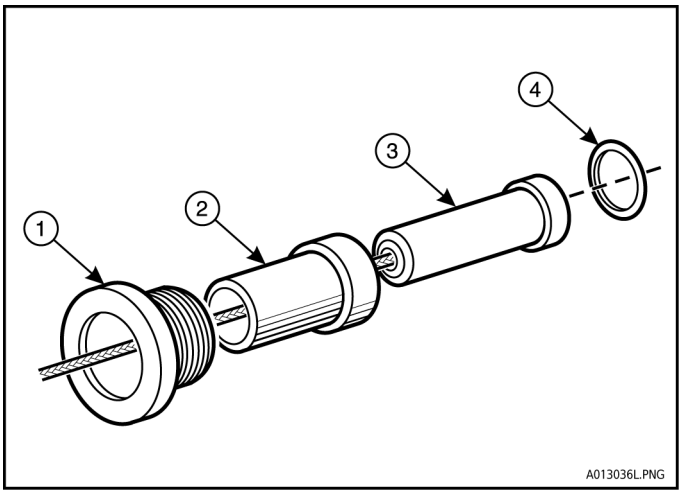

1. Retainer Nut
2. Retainer
3. Electrode
4. Quad-ring

9 Rinse the quad-ring in deionized water. Dry with a lint-free tissue.

10 Use a lint-free tissue moistened with deionized water to clean the electrode face until the gold surface is bright. Rub parallel to the gap (1) with tissue. Rinse with deionized water. Dry with a lint-free tissue.

Figure 12.20 BUNm/UREAm Electrode Face

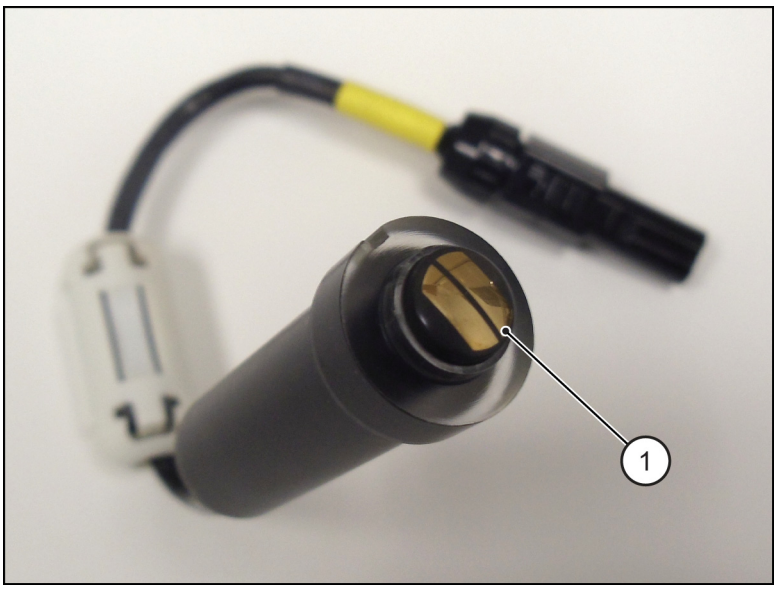

1. Gap

11 Apply a thin coating of Silicone Compound (PN 879049) over the tip of the electrode. Carefully wipe the electrode end parallel to the gap with lint-free tissue to remove all evidence of compound. Rub to a bright finish.

IMPORTANT Thoroughly wipe off the electrode surface to remove any residual silicone compound. Excess compound could prevent a successful calibration.

12 Using lint-free tissue saturated with deionized water; clean the electrode mounting port.

13 Using dry, lint-free tissue, wipe the electrode mounting port.

14 Reinstall the quad-ring on the face of the electrode.

15 Rotate the electrode until the electrode key enters the retainer keyway.

16 To install the electrode assembly, align the keyway on the body of the retainer containing the electrode with the key in the electrode port. Finger-tighten retainer nut.

17 Reconnect the pin lead into the connector panel by aligning the latch on the connector with the notch on connector panel. Push the pin lead into the connector panel until the latch clicks. Refer to Figure 12.17.

18 Select **OK** in the Maintenance pop-up confirmation window. The BUNm/UREAm cup is primed with water.

19 Select **Close** when priming has completed to exit the Result Window.

20 Select **Prime5,** to prime BUNm/UREAm 5 times with reagent. While the module is priming:

- Observe the reagent line and reaction cup to confirm there are no leaks.
  - If any leaks are noticed correct the problem.
- Use a mirror positioned over the cup to observe the stir bar to verify that it is rotating properly.
  - Select **Close** when priming is complete.

21 Select **Drain**. When draining is complete, select **OK**.

22 When priming is complete, select **Close** to exit the Result Window and select **Cancel** to return to the Maintenance menu.

- If the BUNm/UREAm electrode maintenance was performed, wait 15-20 minutes to allow for thermal equilibration. Calibrate BUNm/UREAm.
- To ensure there are no bubbles in the BUNm/UREAm cup, immediately prior to calibrating, wrap the tip of an applicator stick with lint-free tissue. Insert the end of the stick into the bottom of the cup and carefully swab the electrode.

23 Carefully replace MC cover over reaction cup modules and tighten screws.

24 Reinstall the ISE module cover.

25 Proceed to Calibrate Lamps and Sensor.

Replace CTS Blade (1-Blade Narrow CTS Option)

Replace the Cap Piercer blade approximately once a month or every 15,000 cuts. The blade count records the number of caps pierced by the blade. Refer to CTS Tracking in CHAPTER 8, *System Status, Instrument Commands, and Utilities*.

⚠ CAUTION

The Cap Piercer blade is very sharp and has been exposed to potentially biohazardous fluids. To prevent injury or exposure, do not touch the points of the blade and wear gloves.

Materials Required:

- Medium straight-edge screwdriver
- Narrow CTS blade

Figure 12.21 Cap Piercer Blade

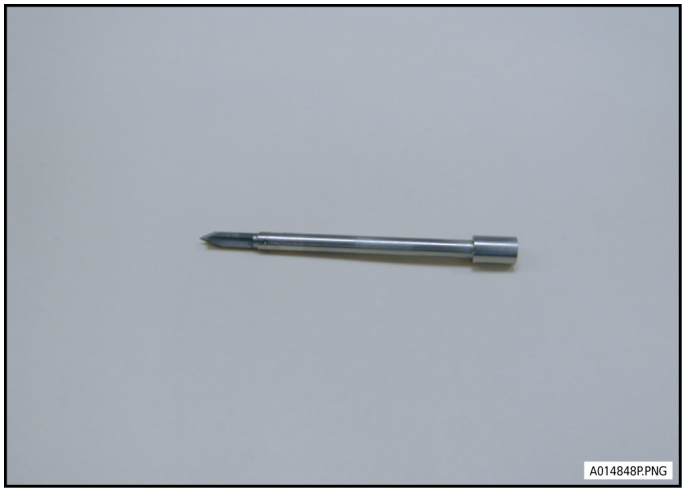

Replacement Procedure

1 To access this procedure, select:

- **Utils** from the menu bar
- **2 Maintenance**
- **1 CTS Blade Replacement**.

To start the procedure, select **Continue**.

2 The instrument prepares for blade replacement, then the Maintenance pop-up confirmation window appears.

⚠ CAUTION

- **The point of the Blade is very sharp and extends below the Wash Tower. Avoid the bottom of the Wash Tower.**
- **DO NOT select OK when the cover is removed. If you select OK the Cap Piercer Carriage moves up and causes a pinch hazard.**

3 Fully loosen the two captive Cap Piercer cover screws (1) at the base of the Cap Piercer cover.

Lift and remove the cover.

Figure 12.22 Cap Piercer Cover

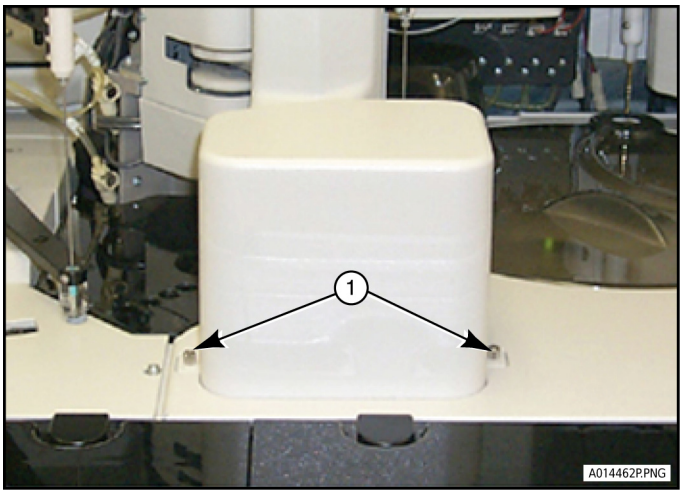

1. Captive Cap Piercer Cover Screws

4 Refer to Figure 12.23.

- Fully loosen the one captive blade screw (2).
- Fully loosen the two captive blade holder screws (1).
- Remove the blade holder.

Figure 12.23 Cap Piercer

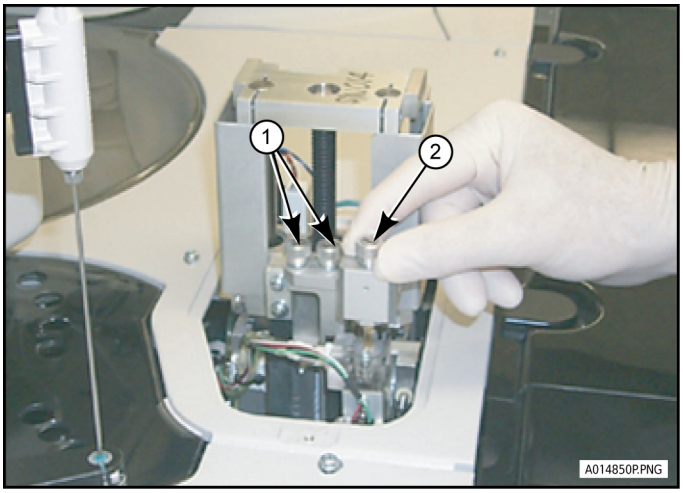

1. Captive Blade Holder Screws
2. Captive Blade Screw

5 Hold the blade at the top of its shaft. Do NOT touch the points of the blade.

6 Lift up the blade to remove it.

7 Discard the old blade into a biohazard sharps container.

⚠ CAUTION

The point of the blade is very sharp.

8 Remove a new blade from its container.

9 Hold the blade holder with the blade hole on the top. Note that the blade hole is keyed and the blade has a slot.

Install the blade into the blade holder as follows:

- Rotate the blade, if necessary, until it falls into place.
- Finger tighten the captive blade screw.
- Remove the protection from the points of the blade.
- Do NOT touch the points of the blade.

10 Carefully move the points of the blade down through the wash tower and through the alignment slot at the bottom:

- Push down on the blade holder screws and align them over their holes.
- Slowly lower the blade until the blade holder screws are in their holes. Do NOT hit the points of the blade against the opening as you lower the blade.
- Install and tighten the two captive blade holder screws. Tighten the captive blade screw.

11 Install the Cap Piercer cover and tighten the two captive Cap Piercer cover screws.

12 Select **OK**.

- The system sets the blade count to zero.
- The Cap Piercer carriage moves up to *Home* position.
- The system displays the Results Window.

13 Select **Close** to return to the Maintenance Menu.

Clean Chloride Electrode Tip and Flow Cell Port

⚠ CAUTION

To prevent damage due to electrical static discharge (ESD), wear the wrist ground strap when you perform this procedure. For further instructions, refer to Basic Laboratory Practice in the *DxC 600/800 or Integrated Workstation Instructions for Use*.

---

1 Loosen the Phillips screws on the ISE module cover and remove the cover.

NOTE There are two screws on the DxC 800 and three screws on the DxC 600.

---

2 Release the locking pin on the ISE module and lift the module until it clicks into a raised, locked position.

---

3 Prepare for ISE maintenance.

Select:

- **Utils** from the menu bar,
- **2 Maintenance**,
- **3 ISE Service**,
- **1 Electrode Maintenance/Drain**
- **Continue**.

The system drains the flow cell and prepares it for maintenance.

---

4 Loosen the flow cell retaining screw (1) located at the top of the flow cell. This is a captive screw and cannot be removed from the flow cell. Pull assembly forward and upward to remove.

IMPORTANT Do not disconnect any of the reagent lines attached to the flow cell.

Figure 12.24

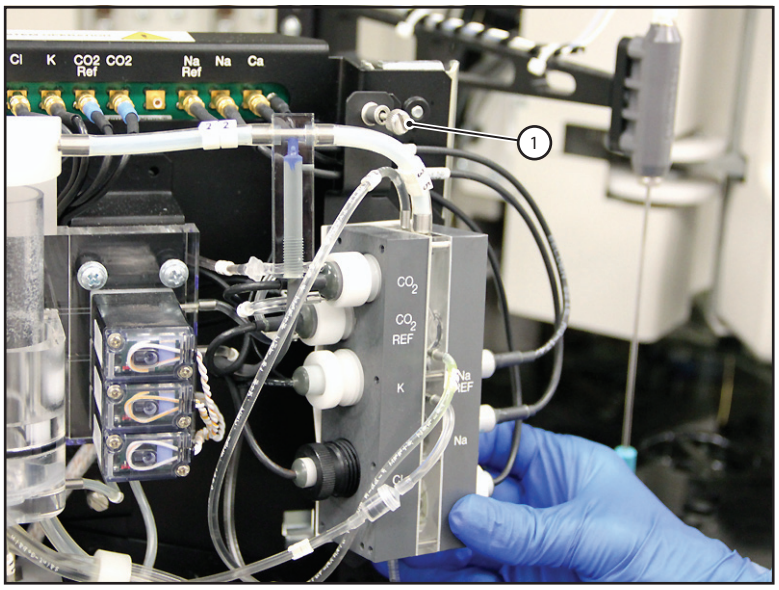

5 Locate the Chloride Electrode (1) in Figure 12.25. Remove electrode by turning the electrode retaining nut counter-clockwise.

Figure 12.25

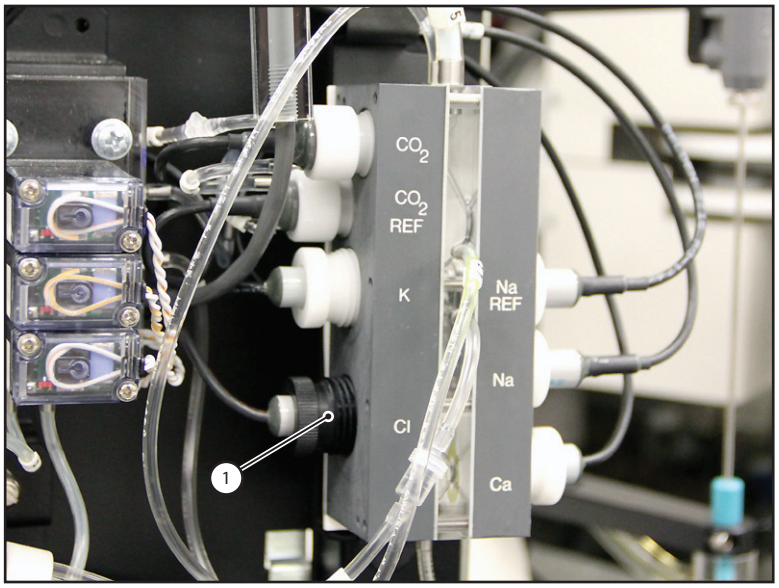

6 Remove the quad-ring (1) in Figure 12.26 from the tip of the electrode. If the quad-ring is not on the electrode, inspect the electrode port. If the quad-ring is in the electrode port, carefully remove it. Clean the quad-ring with a lint-free tissue and set aside. Clean the electrode retaining nut with a lint-free tissue.

Figure 12.26

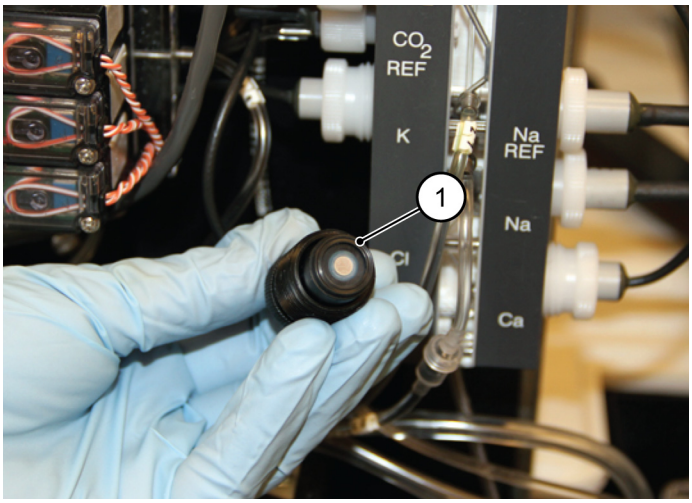

7 Gently wipe the face of the Chloride Electrode tip with a lint-free tissue. If necessary, moisten the tissue with deionized water to help remove debris or precipitate. Wipe dry with a lint-free tissue and set aside.

8 Inspect the chloride electrode flow cell port. Carefully remove any debris or precipitate that may have accumulated with a cotton-tipped applicator moistened with deionized water. Use multiple cotton-tipped applicators until the yellowish precipitate is removed.

9 Completely dry the electrode flow cell port with a dry cotton-tipped applicator. Use care to avoid leaving cotton fibers in the Chloride Electrode flow cell port.

IMPORTANT Do not scratch the electrode port.

10 Install the quad-ring on the electrode and insert the electrode into the electrode port. Turn the electrode retainer nut clockwise until finger-tight.

11 Gently pull on electrode body to test for proper seating of electrode. The electrode assembly should not move. If electrode moves, remove and reinstall it.

12 Reposition flow cell on the mounting panel and reattach by finger-tightening the one retaining screw. See Step 4.

13 Select **OK** in the Maintenance pop-up confirmation window when the electrode maintenance has been completed.

IMPORTANT Reagents immediately prime through the flow cell.

While the system is priming, observe the flow cell for leaks. Stop the priming if you notice any leaks and correct the problem.

14 When the system has completed priming, select **Close** to exit the procedure.

15 Release the locking pin and lower the ISE module. Be careful not to pinch tubing as you lower the ISE module.

⚠ CAUTION

Pinch hazard. Keep fingers clear of the ISE module as you lower it.

16 Reinstall the ISE module cover.

17 Fasten the Phillips screws on the ISE module cover to insure the cover is firmly seated.

NOTE There are two screws on the DxC 800 and three screws on the DxC 600.

18 Calibrate all ISE chemistries.

19 Record Clean the Chloride Electrode Tip and Flow Cell Port in the Action Log.

Two-Month Maintenance

- Replace CTS Blade/Wick (1-Blade Thick CTS Option) (2-month or 30,000 cuts)
- Change/Clean DxC Air Filters

Replace CTS Blade/Wick (1-Blade Thick CTS Option)

Replace the Cap Piercer blade and its CTS Auto-Gloss wick approximately every two months or 30,000 cuts. The blade count records the number of caps pierced by the blade. Refer to CHAPTER 8, *System Status*, Instrument Commands and Utilities.

⚠ CAUTION

The Cap Piercer blade is very sharp and has been exposed to potentially biohazardous fluids. To prevent injury or exposure, do not touch the points of the blade and wear gloves.

Materials Required:

- Medium straight-edge screwdriver
- CTS blade and wick assembly

---

1 To access this procedure, select:

- **Utils** from the menu bar
- **2 Maintenance**
- **1 CTS Blade Replacement**.

To start the procedure, select **Continue**.

---

2 The instrument prepares for blade and wick replacement, then the **Maintenance** pop-up confirmation window appears.

⚠ CAUTION

- **The points of the Blade are very sharp and extend below the Wash Tower. Avoid the bottom of the Wash Tower.**
- **DO NOT select OK when the cover is removed. If you select OK the Cap Piercer Carriage moves up and causes a pinch hazard.**

3 Fully loosen the two captive Cap Piercer cover screws (1) at the base of the Cap Piercer cover. Lift and remove the cover.

Figure 12.27 Cap Piercer Cover

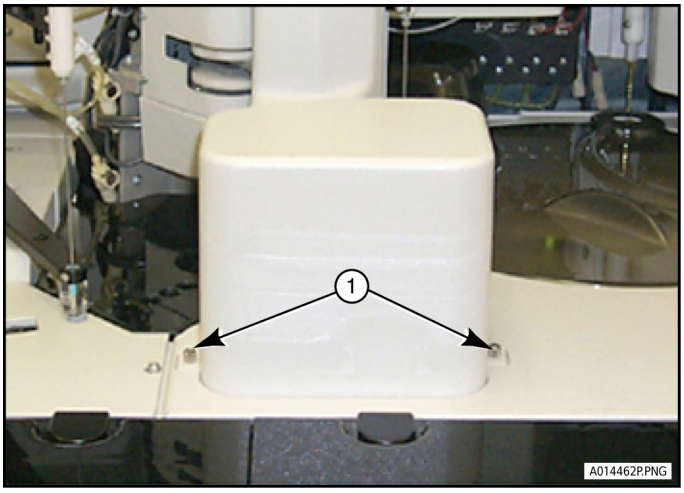

1. Captive Cap Piercer Cover Screws

---

4 Refer to Figure 12.28.

- Fully loosen the one captive blade screw (2).
- Push down on this screw until the blade (3) separates from the blade holder (4).
- Fully loosen the two captive blade holder screws (1).
- Remove the blade holder (4).
- Unclip the wick clip (5).

Figure 12.28 Cap Piercer

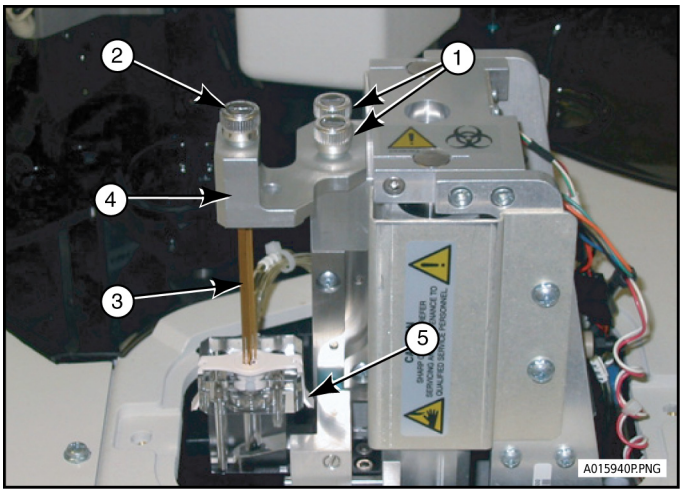

1. Captive Blade Holder Screws
2. Captive Blade Screw
3. Blade
4. Blade Holder
5. Wick Clip

5 Refer to Figure 12.29.

Remove the blade and wick assemblies as follows:

- Hold the blade (1) at the top. Do not touch the points (2) of the blade.
- Lift up the blade and remove it with the wick assembly at the same time:
  - The wick assembly (3) should be attached to the blade.
  - Do not touch the wick because it contains CTS Auto-Gloss lubricant which is very slippery and difficult to clean.
- Discard the old assemblies into a biohazard sharps container.

Figure 12.29 Cap Piercer Blade and Wick Assembly

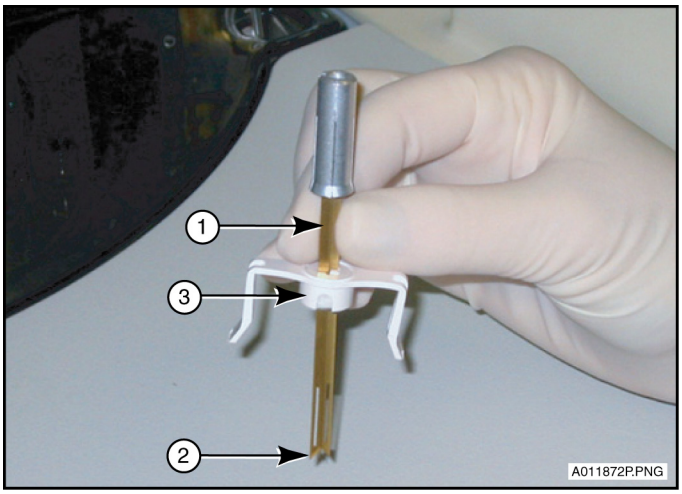

1. Blade
2. Points of the Blade
3. Wick Assembly

6 Refer to Figure 12.29.

NOTE A new blade is shipped with a wick attached. The points of the blade are very sharp. The blade shaft is not sharp.

- Remove a new blade and wick from its packaging.
- Hold it at the top of the blade (1), immediately under the blade clamp as shown in Figure 12.29.

7 Refer to Figure 12.30.

Hold the blade holder (5) with the blade clamp hole (3) on the top as shown. Note that the blade clamp hole (3) is keyed and the blade clamp (2) has a slot. Install the blade (1) into the blade holder (5) as follows:

- Put the blade clamp end (2) of the blade into the blade clamp hole (3).
- Rotate the blade, if necessary, until it falls into place.
- Finger tighten the captive blade screw (4).
- Remove the protection from the points (6) of the blade.
- Do not touch the points of the blade.

Figure 12.30 Cap Piercer Blade and Blade Holder

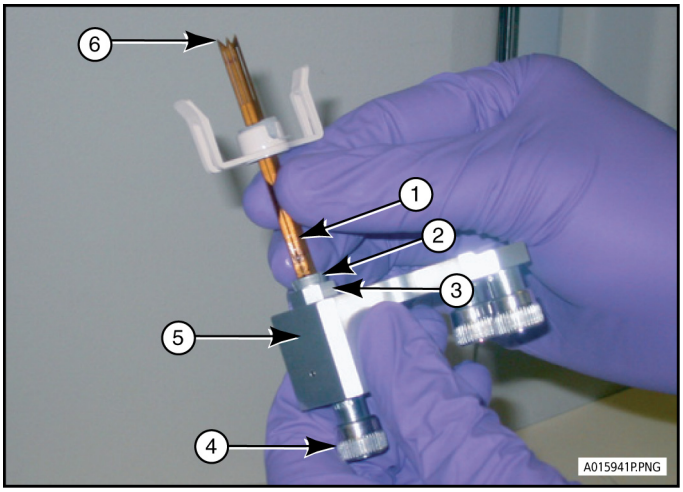

1. Blade
2. Blade Clamp
3. Blade Clamp Hole
4. Blade Screw
5. Blade Holder
6. Points of the Blade

8 Refer to Figure 12.28.

Carefully move the points of the blade down through the wash tower and through the alignment slot at the bottom:

- Push down on the blade holder screws (1) and align them over their holes.
- Slowly lower the blade through the alignment slot until the blade holder screws are in their holes. Be careful not to hit the points of the blade on the edge of the metal alignment slot.
- The blade is through the alignment slot when the blade holder touches the surface of the frame of the cap piercer.
- Secure wick clip to blade holder wash block.
- Install and tighten the two captive blade holder screws (1). Tighten the captive blade screw (2).

9 Refer to Figure 12.27.

Install the Cap Piercer cover and tighten the two captive Cap Piercer cover screws (1).

10 Select **OK**.

- The system sets the blade count to zero.
- The Cap Piercer carriage moves up to *Home* position.
- The system primes the wick with CTS Auto-Gloss lubricant.
- The system displays the Results Window.

11 Select **Close** to return to the Maintenance Menu.

Change/Clean DxC Air Filters

IMPORTANT To minimize system down time, it is recommended to keep on hand a clean set of air filters. Dirty filters can then be cleaned at a convenient time.

1 Open all DxC lower compartment doors (left, middle and right).

2 Remove each of the compartment air filters. There are two different sizes of air filters. They are located over vent areas on the inner side of each door. Set aside for cleaning.

3 Vacuum or brush each filter thoroughly to remove dust. If excessively dirty, rinse with deionized water. Vigorously shake residual water from filters. Allow the filter to air dry completely.

⚠ CAUTION

Do not place a damp filter back on the system. Residual moisture may cause damage to the system. You may find it helpful to order a second set of filters to use as an alternate. The DxC 600 requires two of PN A08879, and one each of PN A08851 and PN 466375. The DxC 800 requires three of PN A08879 and one of PN 466375.

4 Install the clean, dry filters back into position on each door, placing the small filter (1) on top and the large filter (2) on the bottom. Refer to Figure 12.31.

Slide each filter into position so that the metal grating faces towards the inside of the instrument when the doors are closed.

Figure 12.31 DxC Air Filter Racks

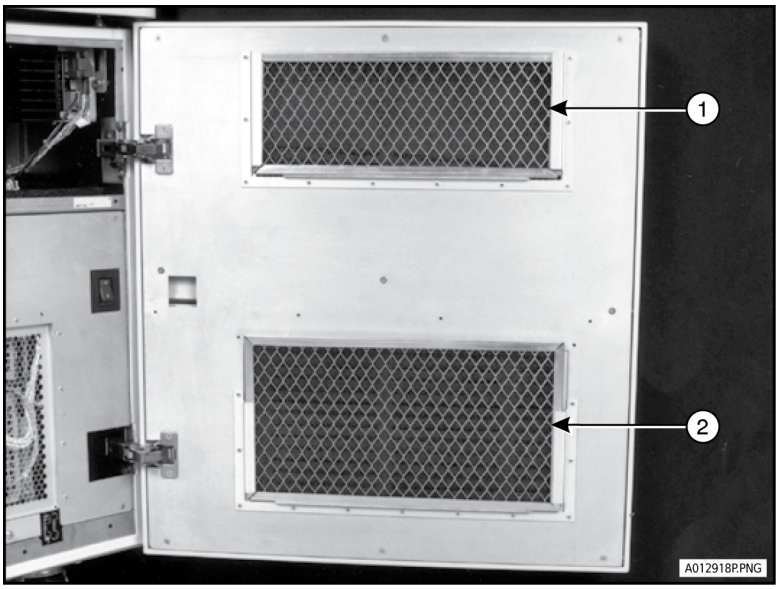

1. Small Filter
2. Large Filter

5 Close all compartment doors.

Three-Month Maintenance

- Replace 500 µL Reagent Syringe Plunger

Replace 500 µL Reagent Syringe Plunger

The reagent syringe plunger rod assembly on the DxC should be replaced every three months or when signs of wear (discoloration, flaking tips, and so forth) are noticed.

⚠ CAUTION

This Syringe Plunger Replacement procedure only applies to the 500 µL CC Reagent Syringe.

⚠ CAUTION

To prevent damage due to electrical static discharge (ESD), wear a wrist ground strap when you perform this procedure. For further instructions, refer to Basic Laboratory Practice in the beginning of this chapter.

Figure 12.32 CC Reagent Syringe (500 µL)

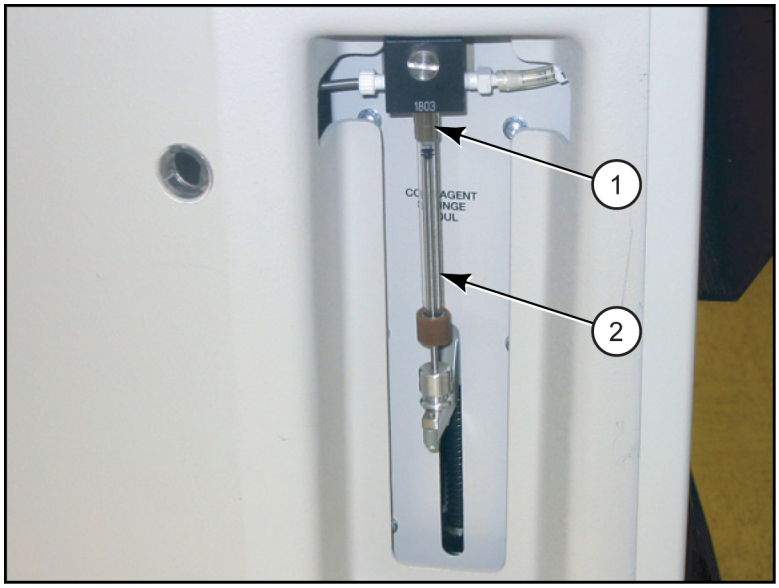

1. Syringe Attached to Luer-lock Fitting
2. CC Reagent Syringe

Prepare for Maintenance Mode and Remove the Plunger

Before removing the plunger, the plunger rods must be fully extended to the bottom of the syringe barrels. Follow the steps below to activate the automated Syringe Maintenance procedure.

IMPORTANT The system status must be in *Standby* to access *Maintenance* mode.

---

1 Select:

- **Utils** from the menu bar
- **2 Maintenance**
- **7 Syringe Maintenance**
- **1 Syringe or Syringe Plunger Replacement**

---

2 Select **Continue** to prepare the syringe rod assembly for maintenance.

OR

Select **Cancel** to immediately return to the Maintenance menu without performing syringe maintenance.

---

3 The syringe rod (1) is now positioned for removal.

Figure 12.33 Reagent Syringe Rod

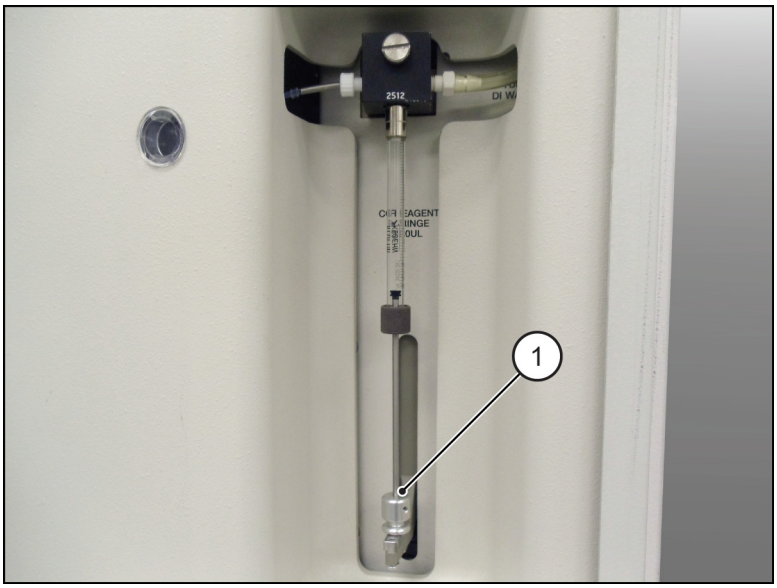

1. Syringe Rod

---

4 Unscrew the barrel of the reagent syringe (right side of the instrument) to release the reagent syringe from the Luer-lock fitting. Refer to Figure 12.32.

5 Unscrew the round plunger end (1).

Figure 12.34 Reagent Syringe Rod

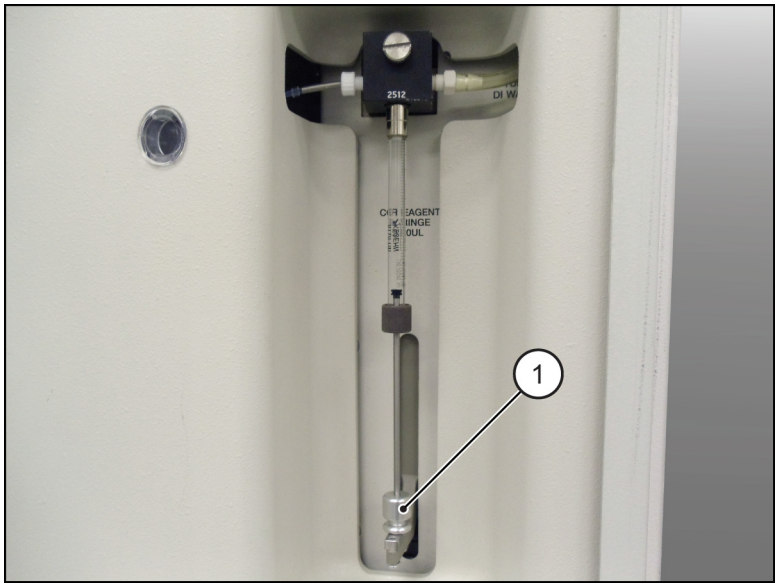

1. Round Plunger End

6 Separate the plunger rod (3) from the barrel (1) by unscrewing the brown plunger guide (2) at the base of the barrel and pull the plunger rod out of the barrel. Discard the old plunger rod (with its guide and base).

The plunger rod cannot be pulled through the brown plunger guide.

Figure 12.35 Syringe Assembly

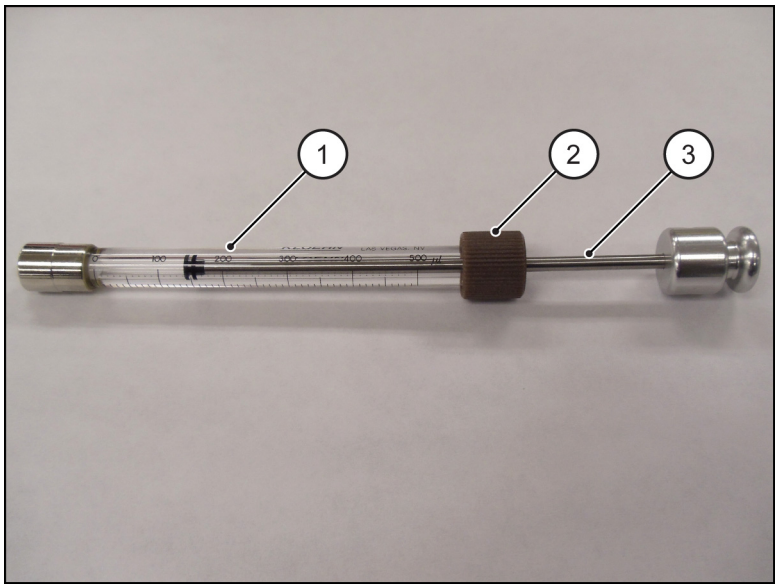

1. Barrel
2. Plunger Guide
3. Plunger Rod

Install the Syringe

1 Remove the clear sleeve from the new plunger rod tip before installing into the syringe barrel.

2 Moisten the new plunger rod tip with deionized water to limit the amount of air bubbles and insert the tipped end of the plunger rod into the syringe barrel.

3 Screw the brown plunger guide onto the barrel finger-tight.

⚠ CAUTION

When installing the syringes, do not mix the two different syringe sizes. The MC and CC sample syringes (100 µL) are located on the back wall of the DxC. The CC reagent syringe (500 µL) is located on the right side of the instrument.

4 To install the assembled syringe:

- Fill the entire syringe barrel with deionized water.
- Tap the syringe to release bubbles.
- Screw the round plunger end onto the instrument.
- Carefully pull the syringe barrel upward until the syringe Luer-lock fitting is engaged.
- Turn the syringe barrel and lock in place.

5 Select **OK** after replacing the 500 µL reagent syringe plunger.

IMPORTANT Always select **OK** to return the syringe plunger rods to the Home position (top) of the syringe unit. If you select **Cancel** from the pop-up window, and the **Syringe Maintenance** screen is exited, a motion error can occur.

6 Select **Close** to return to the Maintenance menu.

Prime the Reagent Syringe

1 Prime the reagent syringe 10 times. Do the following:

- Select **Utils** from the menu bar
- Select **1 Prime**
- Select **CC F2**
- Select **Reagent Delivery Subsystem**
- Type **10** in the **Number of primes to repeat** field
- Select **Start Prime**

2 Check the reagent syringe and aspiration lines for air bubbles. If bubbles persist after priming, remove the reagent syringe and repeat Steps 4 through 6 in the Install the Syringe section and Step 1 in the Prime the Reagent Syringe section.

Four-Month Maintenance

- Clean the MC Reagent Lines

Clean the MC Reagent Lines

The MC Reagent Lines, Cups, and Stir Bars Cleaning procedure should be performed every four months for ALBm, BUNm/UREAm, CREm, GLUCm, PHOSm, and TPm. Your instrument may require more frequent cleaning if you observe erratic results, low results, or reagent cups not filling.

Materials Required:

- MC Maintenance Kit (PN 474198) (includes 3 maintenance bottles with caps and labels, and a bottle holder)
- Phillips screwdriver
- Stir bar removal tool
- Cotton swabs
- Mirror
- Wash Concentrate II
- 6N HCl
- Deionized water

Prepare the following before beginning this procedure:

Table 12.2 MC Line Cleaning Preparation

MC Module	Prepare	By Diluting
ALBm[a], BUNm/UREAm[a], GLUCm[a,b], PHOSm[a]	10% cleaning solution	One part Wash Concentrate II with nine parts deionized water.
CREm[a], TPm[a]	1N HCL	One part 6N HCL with five parts deionized water.

a. The DxC 800 contains ALBm, BUNm/UREAm, GLUCm, PHOSm, CREm and TPm cup modules.
b. The DxC 600 includes only the GLUCm cup module.

- Fill two of the three maintenance bottles contained in the MC Line Maintenance kit with one of the prepared cleaning solutions. Fill the third maintenance bottle with deionized water. The kit includes self-applied labels to label the contents of each bottle.
- The maintenance bottle caps contain holes or openings into which the reagent straws from the removed reagent bottles are inserted.
- Place the maintenance bottles into a bottle holder and position the holder onto the bottom frame of the MC reagent compartment. The back of the holder hooks onto the bottom metal frame of the MC reagent compartment, so that the holder sits upright on or near the floor.

1 Loosen the two Phillips screws on the ISE module cover and remove the cover. (See Figure 12.38.)

2 Loosen the two screws (1) on the MC cover and gently remove the cover.

Figure 12.36 MC Cover

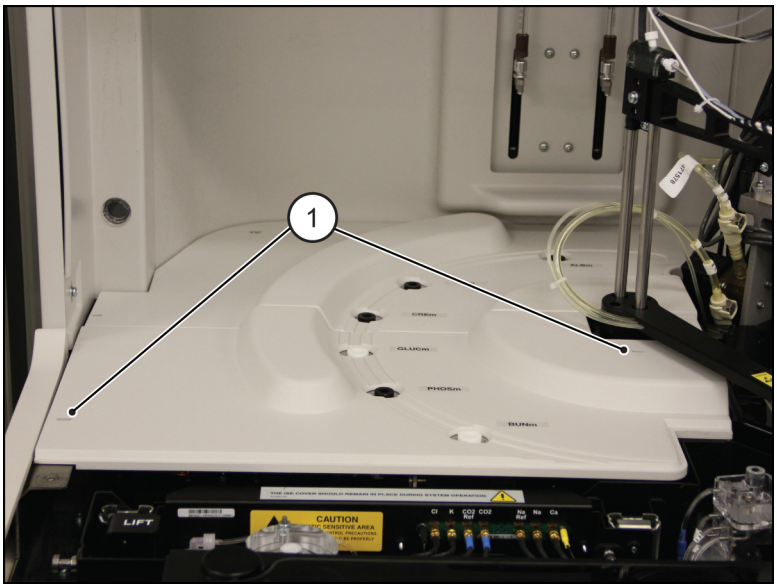

1. Screws

3 Select:

- **Utils** from the menu bar
- **2 Maintenance**
- **4 Cup Maintenance**.

4 Open the left side MC Reagent Compartment door and remove the straws from the reagent bottles: ALBm, BUNm/UREAm, CREm, GLUCm*, PHOSm, and TPm. Each straw can be pulled out from the reagent cap, or the straw can remain in the reagent cap. Wipe the straws dry with lint-free tissue.

IMPORTANT Handle reagent straws with caution to avoid contamination. If straws are contaminated, clean with a lint-free tissue moistened with deionized water.

* Only the GLUCm cup module is on DxC 600 Systems.

5 Use the maintenance bottles included in the MC Maintenance Kit, and place the reagent straws into the perforated bottle caps of cleaning solution as follows:

- GLUCm*, BUNm/UREAm, ALBm and PHOSm into the container of 10% wash concentrate solution
- TPm and CREm into the container of 1N HCL solution.

Do not lower the straws into the cleaning solution. The reagent straws will prime with air.

Select all appropriate MC chemistries and **Prime5**.

Select **Close** when priming is completed.

6 Push all the reagent straws down into the cleaning solution.

Select **Prime20**. The system primes the cleaning solution 20 times. This step takes approximately four minutes.

7 When priming is complete, the system displays the Result Window. Do not select **Close** at this time. Let the solutions sit in the cups for 10 minutes.

8 At the end of the 10-minute period, remove straws from the cleaning solution, wipe straws dry, and insert all straws into the container of deionized water.

Select **Close** to exit the Result Window.

9 Select **Prime20**. The cups are primed 20 times with deionized water.

10 When priming is complete, remove the reagent straws from the deionized water and wipe straws dry.

Select **Close** to exit the Result Window.

11 Select **Prime5**. Air primes through the lines removing residual water from the straws.

12 When priming is complete, insert each reagent straw back into the appropriate reagent bottle. Verify that the reagent straws are seated properly and reach down into the reagent. Make sure all reagent bottle caps are securely tightened and no reagent lines are crimped or pinched.

Select **Close** to exit the Result Window.

13 Select **Prime20**. The cups are primed 20 times with reagent.

Select **Close** to exit.

14 If the six-month expiration date has occurred, Replace Glucose Sensor and clean the cup and stir bar. If replacement is not necessary, proceed to Step 15.

NOTE Following maintenance, allow 15-20 minutes for the glucose sensor to equilibrate prior to sensor calibration.

⚠ CAUTION

If you are cleaning the glucose stir bar, remove the glucose sensor before removing the stir bar. To prevent damage to the glucose sensor membrane tip, do not insert the stir bar removal tool, applicator stick, or any other object into the glucose reaction cup unless the sensor has been removed.

15 Perform the BUNm/UREAm electrode maintenance if maintenance is due. Refer to BUNm/UREAm Electrode Maintenance (DxC 800 Only). While the BUNm/UREAm electrode is removed, clean the cup and stir bar as instructed in Steps 19 and 20. If BUNm/UREAm electrode maintenance is not necessary, proceed to Step 16.

NOTE Following maintenance, allow 15-20 minutes for the BUNm/UREAm electrode to equilibrate prior to chemistry calibration. To ensure there are no bubbles in the BUNm/UREAm cup, immediately prior to calibration, wrap the tip of an applicator stick with lint-free tissue and swab the electrode surface.

⚠ CAUTION

Loosen the BUNm/UREAm electrode retainer nut, approximately one-half turn, and withdraw electrode slightly before removing the stir bar. This prevents possible damage to the delicate electrode tip.

16 Select the desired chemistries. Then select **Drain**.

NOTE It is not necessary to select Glucose if you cleaned the stir bar when you replaced the glucose sensor.

17 Using the stir bar removal tool (1) Figure 12.37, remove the stir bar from one cup. Use the larger side of the removal tool for the BUNm/UREAm and GLUCm* cups, and the smaller side of the removal tool for the remaining cups.

To remove the stir bar, gently insert the removal tool into the cup, all the way to the bottom. Gently remove the tool with the stir bar attached. Use the plunger on the removal tool to release the stir bar.

* The DxC 600 includes only the GLUCm cup module.

Figure 12.37 MC Reaction Cups

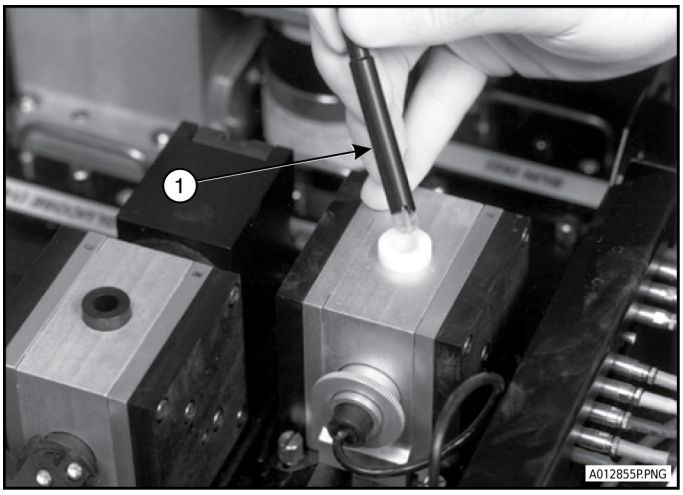

1. Stir Bar Removal Tool

18 Clean the cups with cotton swabs moistened with deionized water.

NOTE If the removed swab from the TPm cup is black, prime TPm again with the 1N HCl solution. Use additional swabs moistened with 1N HCl solution followed by swabs moistened with deionized water to repeat the cup cleaning.

19 Clean stir bar with a cotton swab or lint-free tissue and deionized water. Use 1N HCl to remove buildup from CREm and TPm stir bars. Always rinse the cleaning solution from the stir bars using deionized water.

20 To reinstall the stir bar in the appropriate cup, attach the stir bar to the removal tool and insert it in the cup. Use the plunger on the removal tool to the releases the stir bar.

NOTE Be careful to return the correct size stir bar to its appropriate cup to assure proper stirring movement. Replace the stir bar if cracks or burrs are detected. The larger stir bars correspond to the BUNm/UREAm and GLUCm* cups.

21 Repeat Steps 19-22 for the remaining cups.

22 Reinstall the glucose sensor and the BUNm/UREAm electrode.

* The DxC 600 includes only the GLUCm cup module.

23 Select **OK** to continue. Use the mirror to observe whether the stir bars are turning properly.

⚠ CAUTION

The stir bar may rise in the cup due to air accumulation in the lines. Verify that the stir bar is positioned down into the bottom of the cup.

24 Verify that there are no leaks from the BUNm/UREAm and GLUCm* modules. If you see any leaks, reinstall the sensors.

25 When priming is complete, select **Close** to exit the Result Window.

26 Select **Cancel** to return to the Maintenance menu.

27 Carefully replace MC cover over reaction cup modules and tighten screws.

28 Reinstall the ISE module cover.

29 Calibrate Lamps and Sensor prior to calibrating ALBm, CREm, GLUCm*, PHOSm, and TPm.

Other: Six-Month Maintenance

- Replace Calcium and Potassium Electrode Tips
- Replace Glucose Sensor
- Replace 100 µL Sample Syringes

Replace Calcium and Potassium Electrode Tips

The following procedures apply to the preparation and replacement of calcium and potassium electrodes that are housed in the flow cell. The operator may replace one or both electrode tips at the same time. Replace the calcium tip at 6 months or 80,000 samples.

* The DxC 600 includes only the GLUCm cup module.

Prepare Calcium and Potassium Electrode Tip

1. Pour ISE Reference Solution (do not dilute) into a clean container to a depth not to exceed two inches (5 cm).

2. Unpack a new potassium electrode tip (PN 669117) and/or a new calcium electrode tip (PN 467769).

   Carefully remove the protective cap from membrane end of tip assembly.

   Verify that the black protective cover on the internal threaded connector end of the tip assembly is in place.

3. Lower electrode tip with the membrane face down into the soaking solution until it floats. For maximum initial operational stability, the ideal soaking time is 24 hours. The minimum required time is one hour.

   If maximum soaking time is not allowed, the new electrode may require a few hours of operation to achieve complete electrical stability. During this period of time, more frequent than normal calibration may be required in response to system error messages. Assay results are not compromised during this time.

4. After soaking is completed remove the tip from the soaking solution and dry sides using a lint-free tissue. DO NOT touch electrode tip. Discard soaking solution.

5. Remove the back protective cover from the electrode tip. Check for the presence of moisture. Remove any moisture using lint-free tissue. Proceed to Remove and Install Electrodes in this section.

Remove and Install Electrodes

1 Loosen the two Phillips screws (1) on the ISE module cover and remove the cover.

Figure 12.38 ISE Module Cover

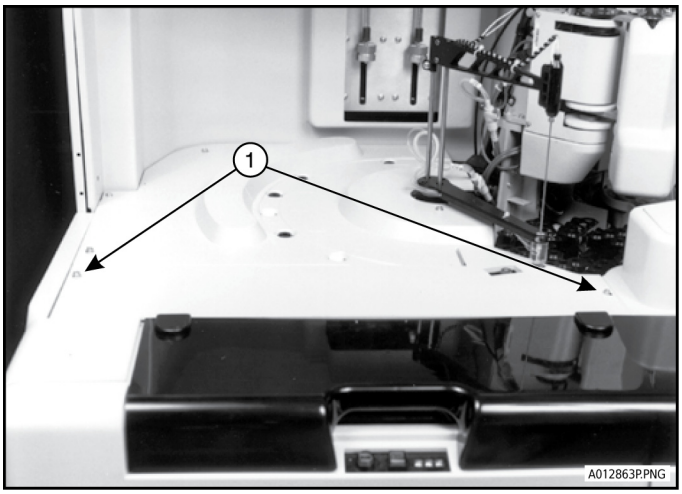

1. Phillips Screws

2 Release the locking pin (1) on the ISE module and lift the module until it clicks into a raised, locked position. The locking pin is located on the left side of the ISE module on DxC 800 Systems as shown below. The locking pin is located on the right side of the ISE module on DxC 600 Systems.

Figure 12.39 ISE Module Locking Pin (DxC 800 shown)

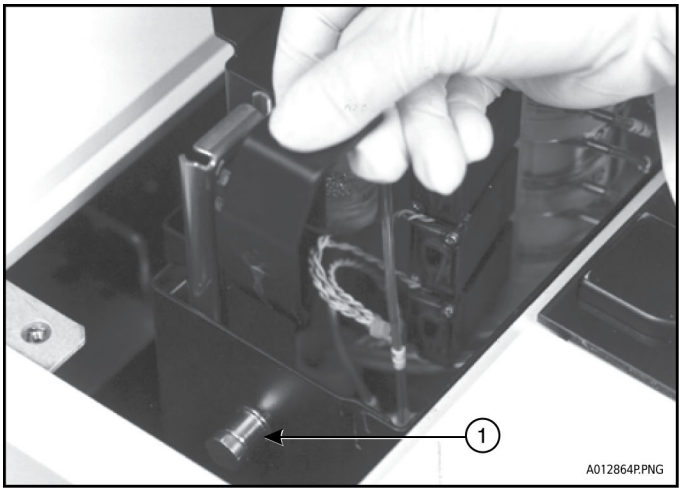

1. Locking Pin

3 Prevent leakage of reagent from the flow cell.

- Select:
  - **Utils** from the menu bar
  - **2 Maintenance**
  - **3 ISE Service**
  - **1 Electrode Maintenance/Drain**
  - **Continue.**

The flow cell is prepared for electrode maintenance.

⚠ CAUTION

To prevent damage due to electrical static discharge (ESD), wear the wrist ground strap when you perform this procedure. For further instructions, refer to Basic Laboratory Practice in the beginning of this chapter.

4 Loosen the captive flow cell retaining screw (1) located at the top of the flow cell. Pull assembly forward and upward to remove.

IMPORTANT Do not disconnect any of the reagent lines attached to the flow cell. Removal of the flow cell is not necessary for replacing electrodes located on the right side of the flow cell.

Figure 12.40 FLow Cell

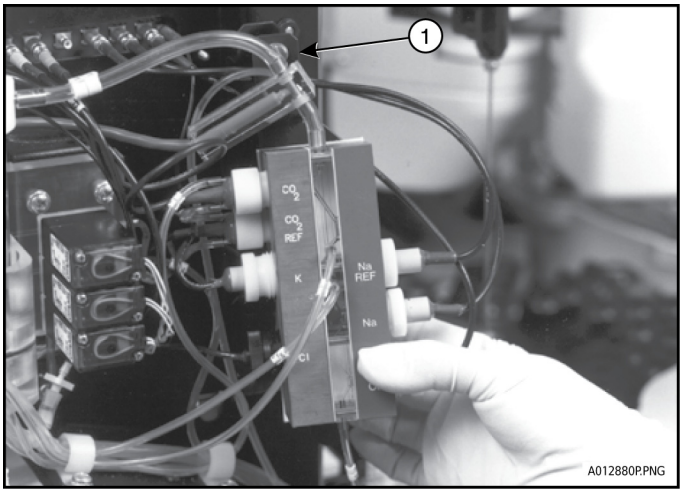

1. Flow Cell Retaining Screw

5 Locate Potassium electrode (1). Remove electrode by loosening the electrode retaining nut.

AND/OR

Locate Calcium electrode (2). Remove electrode by loosening the electrode retaining nut.

Figure 12.41 Flow Cell

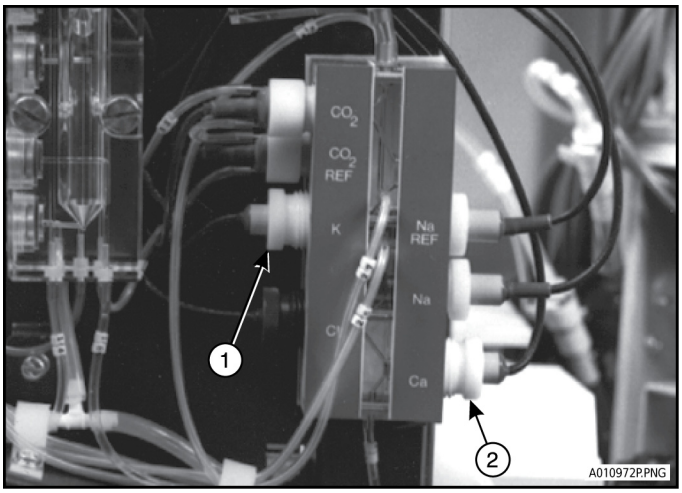

1. Potassium Electrode
2. Calcium Electrode

6 Remove the quad-ring (1) from the tip of the old electrode. If the quad-ring is not on the electrode, inspect the electrode port for the quad-ring. Discard the quad-ring.

Figure 12.42 Potassium Electrode

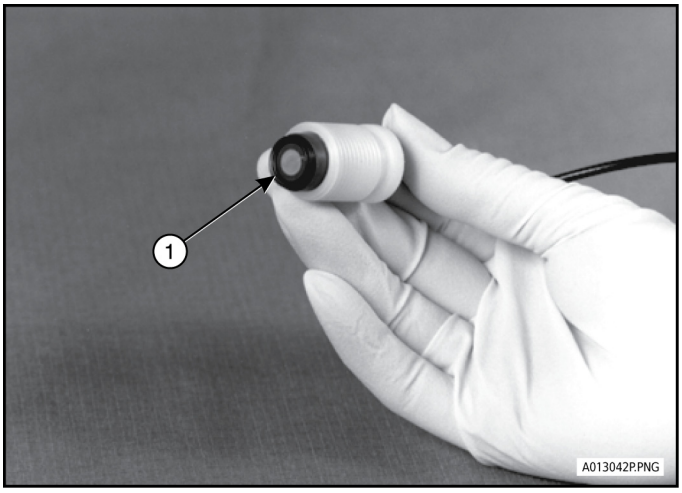

1. Quad-ring

7 Unscrew the old tip from the electrode assembly. Discard the O-ring and the old electrode tip.

8 Install a new O-ring on the electrode body and screw the presoaked potassium and/or calcium electrode tip onto electrode body. Install the new quad-ring on the tip of the new electrode.

NOTE Before you install a calcium or potassium electrode tip into the flow cell, record the electrode number found on the tip. You must enter this number into the Electronic Maintenance Log at the end of the procedure.

9 Thoroughly dry the electrode port with lint-free tissue.

10 Insert the new electrode into electrode port. Turn electrode retainer nut until finger-tight.

11 To test for proper seating of electrode gently pull on electrode body. The electrode assembly should not move. If the electrode moves, remove it and install it again. Check for an extra or missing quad-ring if installation is difficult.

12 Reposition flow cell on the mounting panel and tighten the one retaining screw.

13 Select **OK** in the Maintenance pop-up confirmation window when the electrode service has been completed and the electrode has been properly replaced.

IMPORTANT Reagents immediately prime through the flow cell.

While system is priming, observe flow cell for leaks. If you notice any leaks, correct the problem when priming is complete.

14 When system has completed priming, select **Close** to exit the procedure.

15 Lower the ISE module by releasing the locking pin. Be careful not to pinch tubing as the ISE module is lowered.

⚠ CAUTION

Pinch hazard. Keep fingers clear of the ISE module as you lower it.

16 Reinstall the ISE module cover.

17 Calibrate all the ISE chemistries. If the calcium electrode tip was replaced, proceed to Step 18.

IMPORTANT Reference drift for the new electrodes may be observed during the first 4-6 hours after electrode replacement. Results will **not** be compromised. Recalibrating the chemistry during this time period helps stabilize the electrode.

18 Following calcium electrode tip replacement and calibration:

- Program and run at least 20 replicates of serum samples for CALC.
- Calibrate calcium.

Replace Glucose Sensor

The Synchron AccuSense glucose oxygen sensor requires no assembly. Each sensor has a gasket positioned over the membrane tip. The sensor is discarded after six months usage on an instrument, at which time a new sensor is installed.

Before you install the glucose sensor, record the sensor number found on the sensor. You must enter this number into the Electronic Maintenance Log at the end of the procedure.On DxC 800 Systems, the BUNm/UREAm module has an extra glucose sensor connector, labeled GLU, located next to the BUNm/UREAm electrode connector. This extra glucose connector can be used to pre-condition a new glucose sensor prior to installation.

Preparation Prior to Replacement (DxC 800 Systems)

For DxC 600 Systems, follow Steps 1-5 in the table below. Then proceed to Draining the Reaction Cup for Sensor Maintenance or Replacement.

For DxC 800 Systems, plug the glucose sensor into the empty connector port, (labeled GLU on the BUNm/UREAm module) 24 hours before glucose sensor installation minimizes sensor drift.

IMPORTANT A new glucose sensor may drift over the first 24 to 48 hours. Always verify control recoveries after calibration. More frequent calibration may be required during the first 24 to 48 hours following installation.

⚠ CAUTION

Do not touch membrane tip.

Materials Required:

- Phillips screwdriver
- Lint-free tissue
- Glucose sensor
- Wash Concentrate II
- Deionized water
- Mirror

- Stir bar removal tool
- Cotton swab

Prepare the following before beginning this procedure:

Table 12.3 Glucose Sensor Cleaning Preparation

Prepare	By Diluting
10% cleaning solution	One part Wash Concentrate II with nine parts deionized water.

Prepare Glucose Sensor

1. Remove the AccuSense glucose oxygen sensor from the package.
2. Remove the protective cap from the electrode connector.
3. Check the sensor for the presence of the gasket on the membrane tip. If the gasket is missing, replace it at this time.
4. Visually inspect the sensor for leakage or puncture of membrane.
5. Hold the sensor in a vertical position with the membrane tip pointed downward. Tap on the side of the sensor body to remove any bubbles from the membrane tip.
6. Remove the ISE module and MC module covers.
7. Push the glucose sensor connector into the empty connector port (1) of the BUNm/UREAm module until the latch clicks.

Figure 12.43 BUNm/UREAm Connector Port

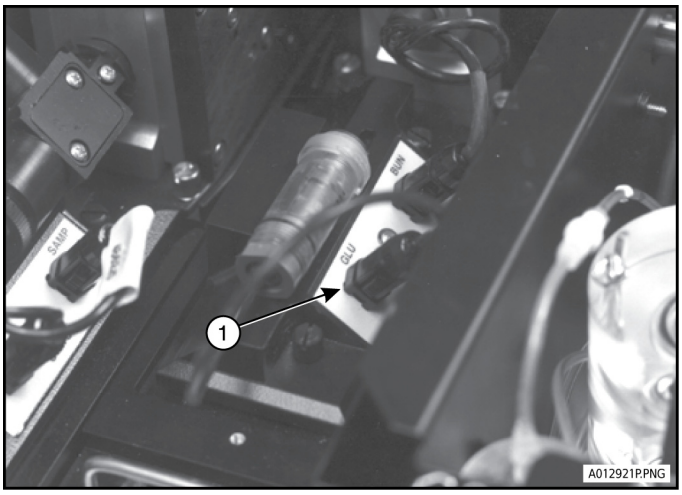

1. Connector Port

8 Set the glucose sensor down into an empty area of the cup modules. Allow the free standing sensor to remain connected but not installed for 24 hours. Be careful that the sensor cable is not pinched or crimped.

9 Reinstall the MC module and ISE module covers.

10 After the 24-hour connection period, proceed to Drain the Reaction Cup for Sensor Maintenance or Replacement below to replace the sensor.

Drain the Reaction Cup for Sensor Maintenance or Replacement

1 Following the 24-hour connection period, drain the reagent from the MC cup.

- Select:
  - **Utils** from the menu bar
  - **2 Maintenance**
  - **4 Cup Maintenance**.

2 Select **Glucose** cup to be drained in preparation for maintenance.

3 Select **Drain**. This drains the cup of reagent so that maintenance may be performed.

4 Proceed to Replace Sensor and Clean Stir Bar.

Replace Sensor and Clean Stir Bar

Follow the steps below to replace the sensor.

IMPORTANT When you install a new sensor, you can clean the reaction cup and/or reagent lines if necessary. See Clean All Cup Modules and Clean the MC Reagent Lines.

1 Remove the ISE module and MC module covers.

2 Press the latch (1), which is located on the connector, and pull out to disconnect sensor pin lead from connector panel.

Figure 12.44 Connector Panel

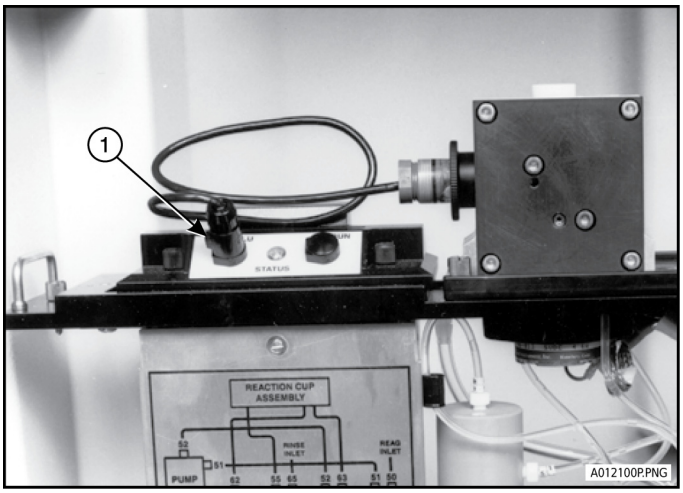

1. Latch

3 Unscrew the sensor retainer nut (1) and withdraw the sensor assembly from chemistry reaction cup.

Verify that the gasket (2) from the removed sensor has not been left in port opening.

Figure 12.45 Sensor Assembly

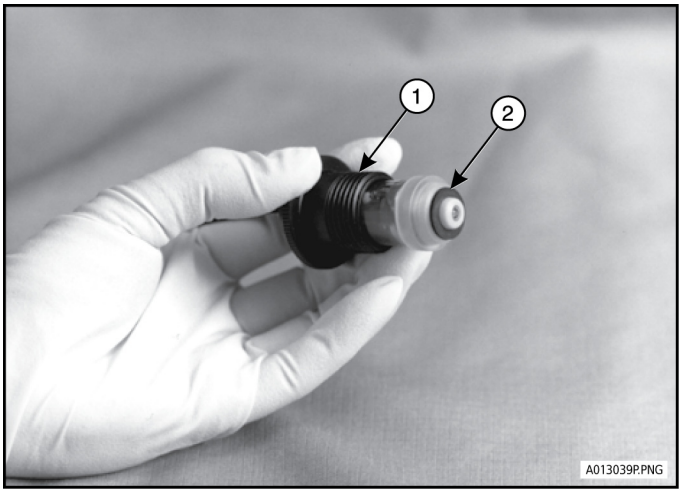

1. Sensor Retainer Nut **2.** Gasket

4 Separate the sensor from retainer nut. Discard the old sensor and gasket.

⚠ CAUTION

Clean the reaction cup and stir bar whenever you replace the sensor. Remove the sensor prior to removing stir bar. To prevent damage to the glucose oxygen sensor membrane tip, do not insert stir bar removal tool, applicator stick, or any other object into the glucose reaction cup unless the sensor has been removed.

5 While the old sensor is removed, clean the cup and stir bar. Using the stir bar removal tool, remove the stir bar. Use the larger side of the removal tool.

Gently insert the removal tool into the cup, all the way to the bottom. Gently remove the tool with the stir bar attached. Use the plunger on the removal tool to release the stir bar.

6 Clean the stir bar and cup with 10% cleaning solution. Use cotton swabs moistened with the 10% cleaning solution to clean the cup. Wipe the cup using applicator swabs moistened with deionized water. Rinse the stir bar with deionized water.

7 To reinstall the stir bar, attach the stir bar to the removal tool and insert it in the cup. Use the plunger on the removal tool to the releases the stir bar.

8 **This step applies to DxC 800 Systems only. For DxC 600 Systems, proceed to Step 11.**

Hold the new sensor, connected to the BUNm/UREAm connector panel, in a vertical position with the membrane tip pointed downward; tap side of sensor body to remove any bubbles from the membrane tip.

9 **This step applies to DxC 800 Systems only. For DxC 600 Systems, proceed to Step 11.**

Disconnect the new prepared glucose sensor from the BUNm/UREAm connector panel.

10 Slide the retainer nut over the cable connector onto the new glucose sensor.

11 Align the keyway on the body of the retainer containing the sensor with the key in the sensor port and install the sensor assembly. Finger-tighten the retainer nut.

12 Reconnect the pin lead into the glucose connector panel by aligning the latch on the connector with the notch on the connector panel. Push the pin lead into the connector panel until the latch clicks.

13 Select **OK** in the Maintenance pop-up confirmation window when replacement is complete. The Glucose cup is primed five times with water.

While module is priming:

- Observe the reagent line and Glucose reaction cup to determine there are no leaks. If any leaks are noticed, correct the problem.
- Use the mirror to observe the stir bar to verify that it is rotating properly.

14 Select **Close** when priming has completed to exit the Result Window.

15 Select **Cancel** to return to the Maintenance menu.

16 Reinstall the MC module and ISE module covers.

17 Proceed to the Calibrate Lamps and Sensor.

18 Calibrate Glucose.

Replace 100 µL Sample Syringes

Use this procedure to replace 100 µL MC and CC sample syringes (gray color plunger guide) every six months or when you notice signs of wear (discoloration, flaking tips, and so forth).

⚠ CAUTION

This 100 µL Sample Syringe Replacement procedure only applies to the 100 µL MC and CC Sample Syringes.

⚠ CAUTION

To prevent damage due to electrical static discharge (ESD), wear a wrist ground strap when you perform this procedure. For further instructions, refer to Basic Laboratory Practice in the beginning of the Maintenance chapter.

IMPORTANT The system status must be in *Standby* mode to access *Maintenance* mode.

---

1 Select:

- **Utils** from the menu bar
- **2 Maintenance**
- **7 Syringe Maintenance**
- **1 Syringe or Syringe Plunger Replacement**

---

2 Select **Continue** to prepare the syringes for removal. The system moves the syringes into position.

OR

Select **Cancel** to immediately return to the Maintenance menu without performing syringe maintenance.

---

3 Unscrew the barrels of two sample syringes (back wall of the instrument) to release each syringe from the T-valve (1). Refer to Figure 12.46.

Figure 12.46 Sample Syringes

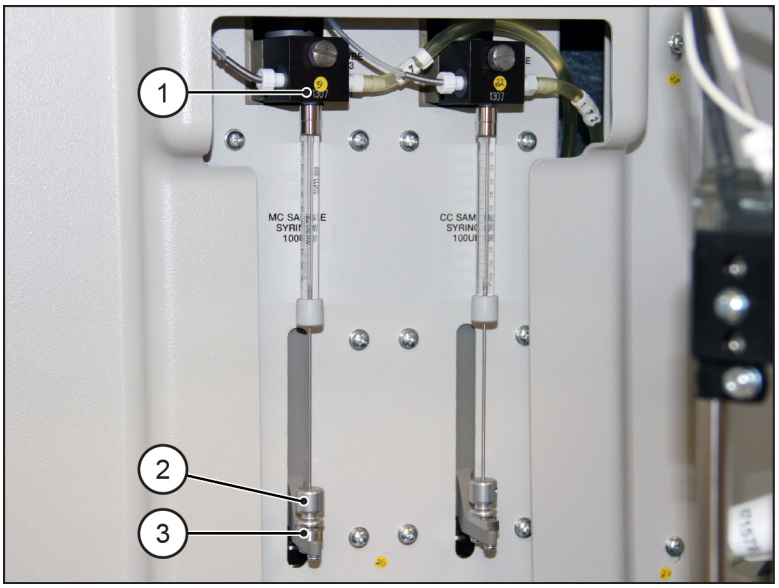

1. T-valve
2. Syringe button
3. Adapter

4 Unscrew the syringe button (2) from the adapter (3). Refer to Figure 12.46. Discard the old syringes.

5 Prepare the new syringes:

- Completely fill the syringe assemblies with deionized water.
- Tap the syringes to release bubbles.

6 Carefully screw the syringe barrel into the T-valve (1) and tighten by holding the plunger guide (2). Extend the syringe button (3) down and tighten onto the adapter (4). Refer to Figure 12.47.

Figure 12.47 Sample Syringe

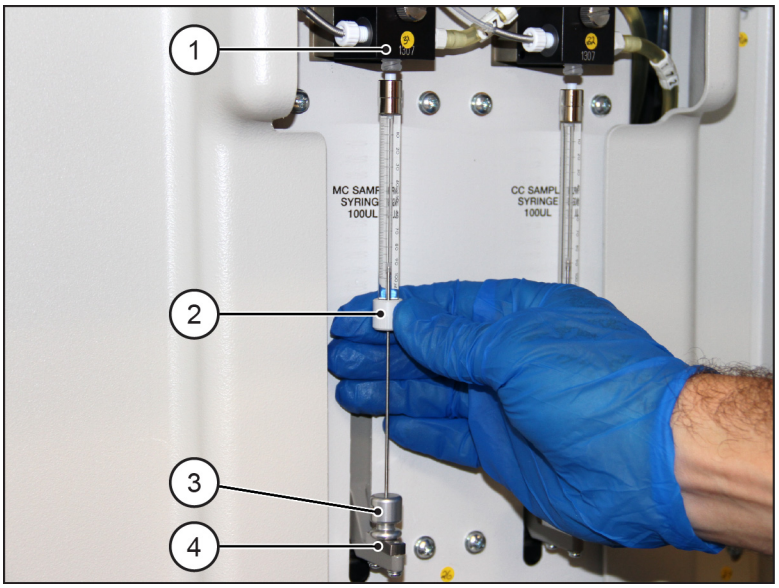

1. T-valve
2. Plunger Guide
3. Syringe Button
4. Adapter

7 When you have replaced both syringes, select **OK**.

IMPORTANT Always select **OK** to return the syringe plunger rods to the Home position (top) of the syringe unit. If you select **Cancel**, a motion error can occur.

8 Select **Close** to return to the Maintenance menu.

9 Prime syringes 10 times. Do the following:

- Select **Utils** from the menu bar
- Select **1 Prime**
- Select **CC F2**
- Select **Sample Delivery Subsystem**
- Type **10** in the **Number of primes to repeat** field
- Select **MC F4**
- Select **Sample Delivery Subsystem**
- Select **Start Prime**

10 Check the syringes and aspiration lines for air bubbles or leaks. If bubbles persist after priming, remove syringe and repeat Steps 6-10.

Other: Yearly Maintenance

- Replace the UCTA Aliquot Probes
- UCTA Carryover PVT Procedure
- Replace the UCTA Piercer Probes
- Replace UCTA Drain Pump Tubing
- Replace UCTA Sample and Wash Station Syringes

Replace the UCTA Aliquot Probes

The UCTA Aliquot Probes must be replaced yearly. If possible, replace both aliquot probes and both piercer probes at the same time for efficiency.

The DxC and the UCTA must be in *Standby* before you start this procedure.

Materials Required:

- 3/32 inch Allen wrench
- 5/64 inch Allen wrench
- UCTA Aliquot Probes

⚠ CAUTION

To prevent damage due to electrical static discharge (ESD), wear the wrist ground strap when you perform this procedure.

⚠ CAUTION

The UCTA Piercer Probe tip is extremely sharp and has been exposed to potentially biohazardous fluids. To prevent injury or exposure, avoid the piercer tip.

1. Press the UCTA **STOP** button.

2. Lift the UCTA canopy.

3. Use a 5/64” Allen wrench to loosen the 2 captive screws on the left or right probe and piercer carriage (1). The front mounting plate is attached to the back of the front carriage. Support the front mounting plate (2) as you loosen the screws.

Figure 12.48 Probe and Piercer Carriage

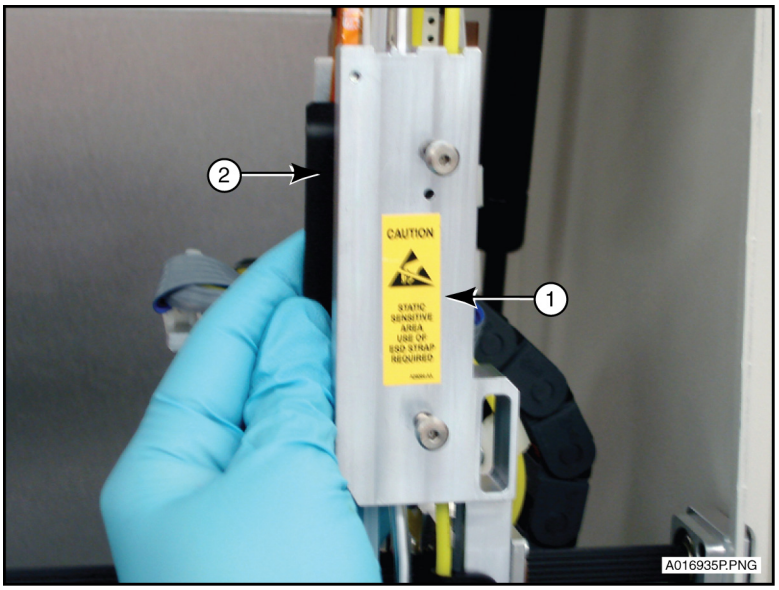

1. Probe and Piercer Carriage
2. Front Mounting Plate

4 Remove the front mounting plate.

5 Push the front carriage down to access the rear mounting plate as shown in Figure 12.49.

Figure 12.49 Probe and Piercer Carriage

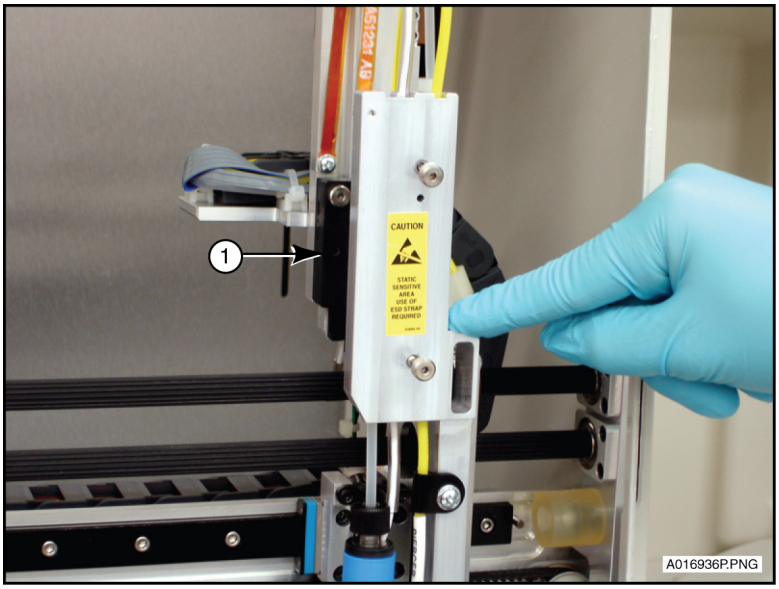

1. Rear mounting plate

6 Use a 5/64” Allen wrench to loosen the 2 captive screws (1) on the rear mounting plate.

Figure 12.50 Rear Mounting Plate

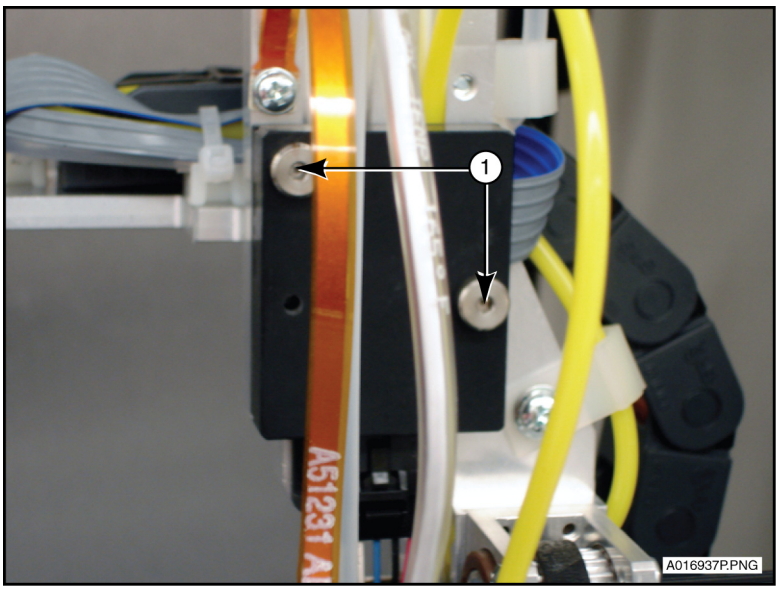

1. Screws

7 Push the rear mounting plate to the side.

IMPORTANT The mounting plate is connected to cables at the right side and bottom. Be careful not to damage these parts.

8 Push the front carriage back up.

9 Place lint-free tissues under the aliquot probe to absorb any drips.

10 Loosen the threaded fitting (1) of the fluid line (2) from the top of the aliquot probe and pull the line out.

Figure 12.51 Probe and Piercer Carriage

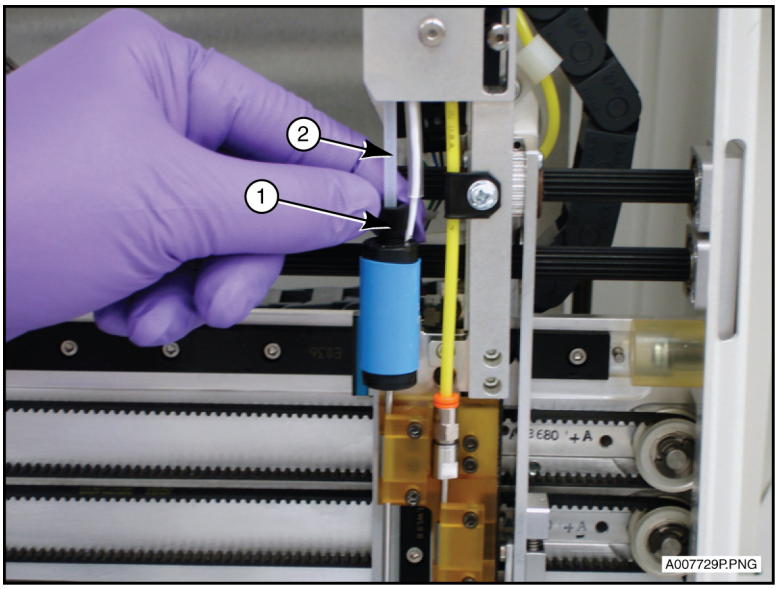

1. Threaded Fitting
2. Fluid Line

11 The level sense cable (1) is attached to the top of the probe and passes from the front carriage to the rear carriage. Detach the level sense cable below the rear carriage.

Figure 12.52 Probe and Piercer Carriage

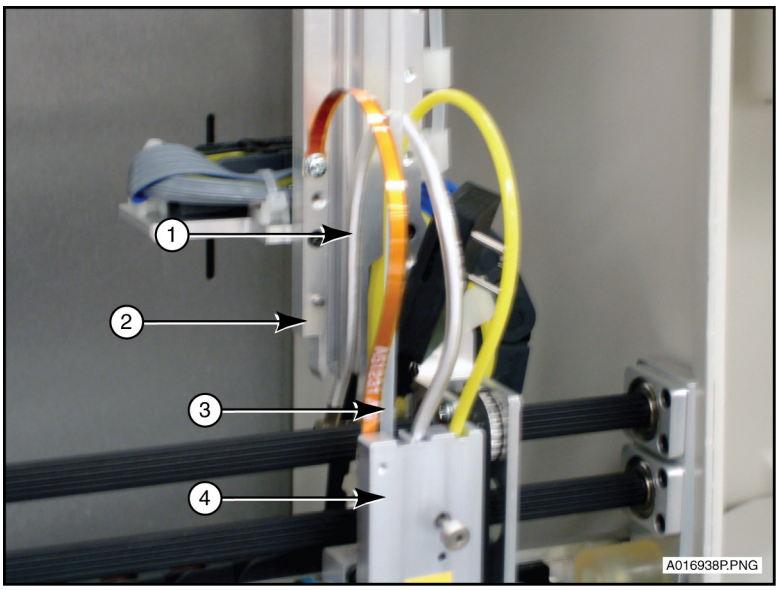

1. Level Sense Cable
2. Rear Guides
3. Fluid Line
4. Front Guides

Figure 12.53 Level Sense Cable

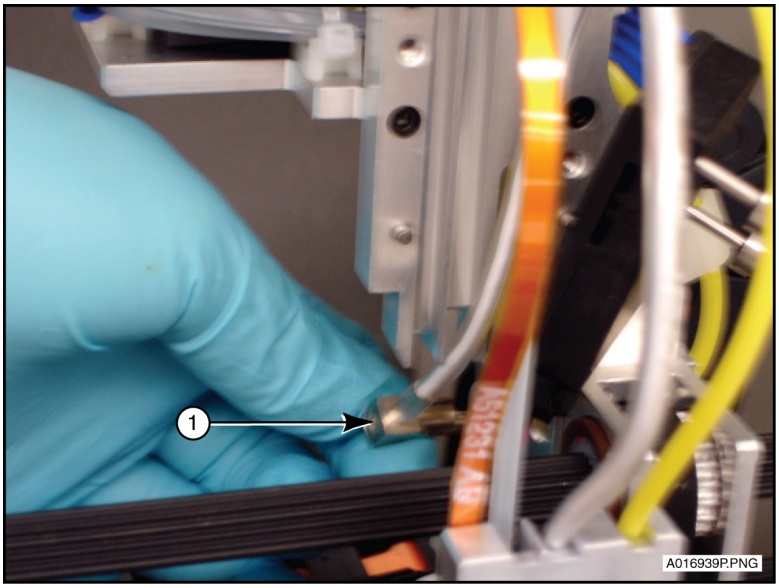

1. Level Sense Cable

12 Use the 3/32” Allen wrench to loosen the 2 retaining screws in the bracket (1). DO NOT remove the retaining screws from the bracket.

Figure 12.54 Aliquot Probe Bracket

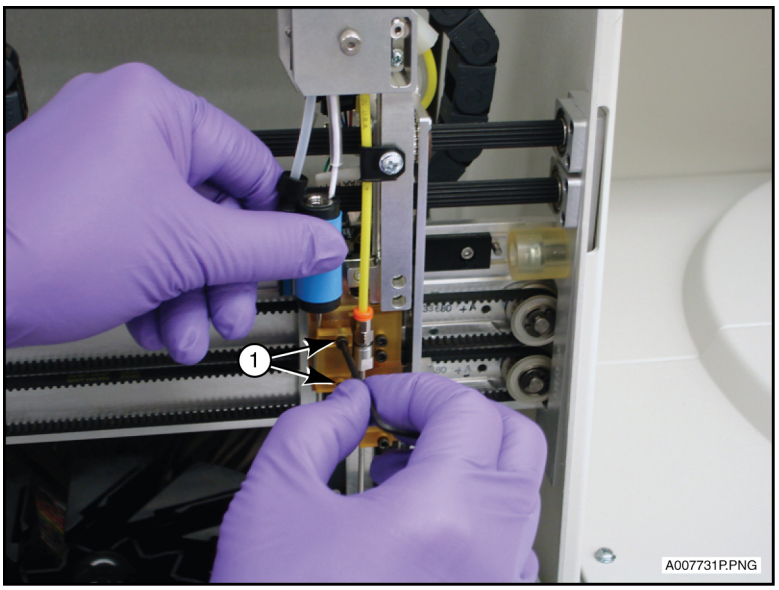

1. Screws

13 Hold the probe above and below the bracket. Pull the probe forward and to the left until the probe is free of the bracket.

14 Lift the probe up and remove it.

15 Discard the used probe in an appropriate biohazard container.

16 Attach the threaded fitting of the fluid line to the new probe. Refer to Figure 12.51. Tighten the fitting until it clicks. Remove the plastic protective sleeve from the new aliquot probe prior to installation.

IMPORTANT If the probe tubing is not seated properly, Leaks that cause level sense errors can occur.

17 Refer to Figure 12.54. Replace the probe in the bracket, seating the alignment bar on the probe in the alignment notch of the bracket. Tighten the retaining screws in the bracket.

IMPORTANT The alignment bar must sit correctly in the alignment notch.

18 Route the aliquot probe tubing through the left front guides on the carriage. Make sure the tubing sits securely in the guides. Refer to Figure 12.55.

19 Refer to Figure 12.55. Route the level sense cable through the center front (4) and rear guides (2) on the carriage. Make sure the cable sits securely in the guides.

20 Reattach the level sense cable below the rear carriage. Keep the level sense cable (1) to the right of the fluid line (3).

Figure 12.55 Probe and Piercer Carriage

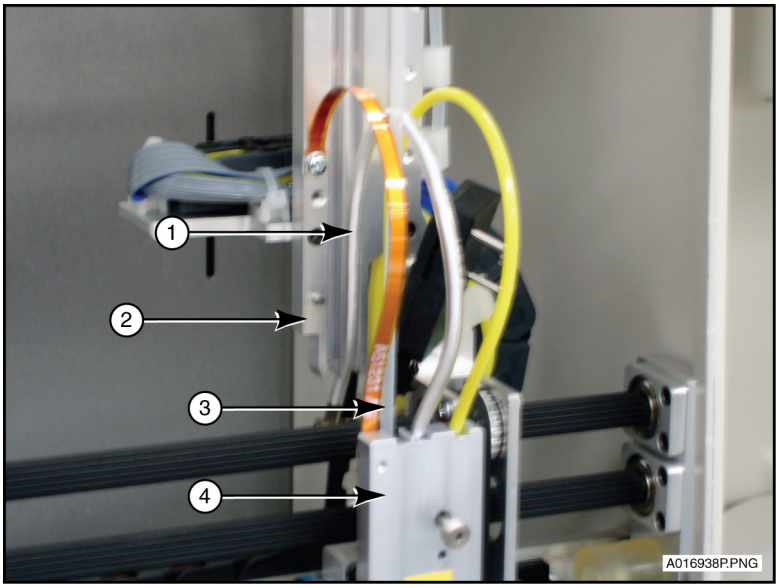

1. Level Sense Cable
2. Rear Guides
3. Fluid Line
4. Front Guides

21 Hold the front mounting plate removed in Step 6 in place and tighten the Allen screws on the front carriage. (Refer to Figure 12.48.)

22 Remove the lint-free tissues. Make sure the probe is centered over the wash station. Push the carriage down carefully and slowly.

23 Reinstall the rear mounting plate. (Refer to Figure 12.50.)

24 Repeat Steps 3-23 for the second aliquot probe.

25 Close the UCTA canopy.

26 Home the UCTA.

- Select:
  - **Instr Cmd** from the menu bar
  - **1 Home**
  - **2 UCTA**.

The workstation console shows the UCTA is *Homing* and the DxC is in *Standby*.

27 Select:

- **Utils** from the menu bar
- **1 Prime**
- **UCTA F5**.

28 Select the probe(s) you replaced, and type **10** for the **Number of primes to repeat** field. Select **Start Prime**.

29 When priming is complete, select **Exit F10**. Then select **Main** to return to the Main screen.

30 Perform UCTA Carryover PVT Procedure.

UCTA Carryover PVT Procedure

Test Summary

The UCTA Carryover PVT Procedure evaluates the cleanliness of the UCTA Aliquot Probes and the effectiveness of the probe wash between uses.

Program this test at the DxI console.

Materials Required:

- Five Sample Racks configured for 2 mL sample cups
- Eighteen 2 mL Sample Cups
- Wash Buffer
- System Check Solution
- Pipette capable of delivering 500 µL

1 Make sure the DxC, UCTA and DxI System statuses are *Standby*.

2 Select **Sample Manager F1** from the DxI Main Menu.

3 Select **New Request F3**.

4 Select **Maintenance F3** to display the Request Maintenance dialog box.

5 Under the **Other Routines** section, select **UCTA Carryover**. Select **OK F1**. The system displays a message to load the racks in the UCTA in the order shown.

6 Select **OK F1** to display the rack instructions. Enter the **Rack ID** for the first rack and fill the rack according to the instructions on the screen.

7 Select each rack in turn, enter the **Rack ID** and fill the rack according to the instructions on the screen.

NOTE Use caution handling solutions to prevent contamination that will cause the test to fail.

8 Load the racks in order on the UCTA load tray.

NOTE Do NOT load racks on the DxI SPU.

9 Press the UCTA **Run** button.

10 When the UCTA Carryover PVT procedure is completed (approximately 1 hour), from the DxI Main Menu, select:

- **Maintenance Review F6**
- **Carryover F3**
- **UCTA Carryover F2**.

to display the results on the UCTA Carryover screen. Select **Print F7** to print the results.

11 Use the following criteria to evaluate the results of the UCTA Carryover PVT procedure.

- Check the Status field for Pass/Fail status.
- Check the Reason field for the description of a failed test.
  - troubleshoot by performing the following steps:
    - Make sure the UCTA Aliquot Probes are clean.
    - Make sure the UCTA wash syringes are functioning properly, and that the fittings and connections are secure.
    - Make sure there is sufficient delivery of Wash Buffer solution.
- If you need additional assistance, contact your local Beckman Coulter Technical Support Representative.

Replace the UCTA Piercer Probes

The UCTA Piercer Probes must be replaced yearly. If possible, replace both aliquot probes and both piercer probes at the same time for efficiency.

The DxC and the UCTA must be in *Standby* before you start this procedure.

Materials Required:

- 3/32 inch Allen wrench
- 5/64 inch Allen wrench
- UCTA Piercer Probes

⚠ CAUTION

To prevent damage due to electrical static discharge (ESD), wear the wrist ground strap when you perform this procedure.

⚠ CAUTION

The UCTA Piercer Probe tip is extremely sharp and has been exposed to potentially biohazardous fluids. To prevent injury or exposure, avoid the piercer tip. Use caution when you remove and replace the UCTA Piercer Probe.

1 Press the UCTA **STOP** button.

2 Lift the UCTA canopy.

3 To replace the piercer probe, push the piercer probe tubing holder (1) down, and pull up on the tubing (2) to remove it.

Figure 12.56 Piercer Probe Assembly

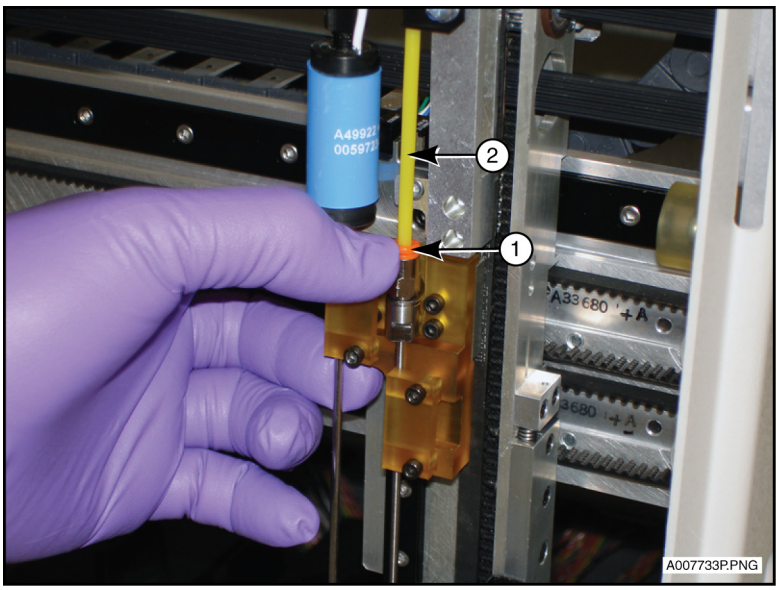

1. Piercer Probe Tubing Holder
2. Tubing

IMPORTANT Be careful not to bend the aliquot probe during this procedure.

4 Use the 3/32” Allen wrench to loosen the 2 retaining screws in the bracket (1). DO NOT remove the retaining screws from the bracket.

Figure 12.57 Piercer Probe Bracket

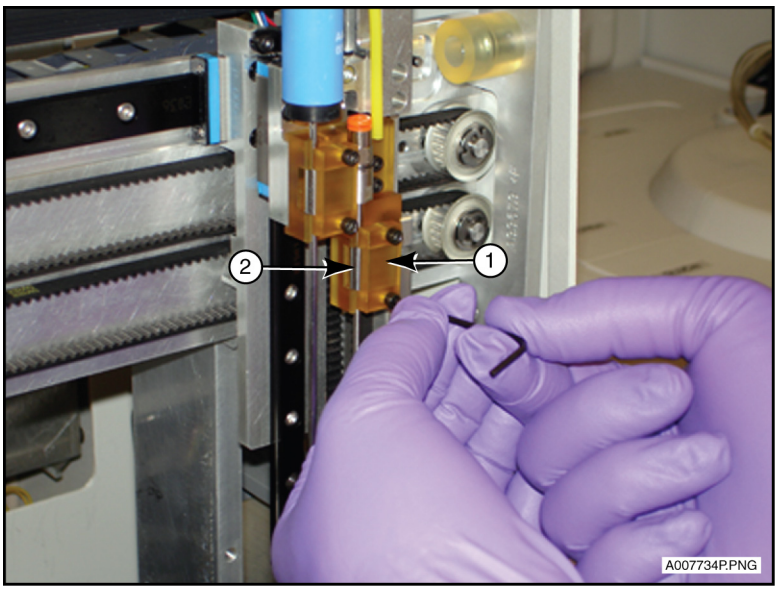

1. Bracket
2. Alignment Key

5 Hold probe above and below the bracket. Pull the probe forward and to the left until the probe is free of the bracket.

⚠ CAUTION

The UCTA Piercer Probe tip is extremely sharp and has been exposed to potentially biohazardous fluids. To prevent injury or exposure, avoid the piercer tip. Use caution when you remove and replace the UCTA Piercer Probe.

6 Discard the used probe in an appropriate biohazard container.

7 Replace the probe in the bracket, seating the alignment bar on the probe in the alignment notch of the bracket. Tighten the retaining screws in the bracket.

8 Refer to Figure 12.56. Hold the carriage in place and attach the piercer probe tubing (2) to the piercer probe tubing holder (1). Push the tubing down as far as it will go into the holder. Gently pull on the tubing to ensure it is attached correctly. Remove the protective sleeve from the bottom of the probe.

9 Repeat Steps 3-9 for the second piercer probe.

10 Close the UCTA canopy.

11 Home the UCTA.

- Select:
  - **Instr Cmd** from the menu bar
  - **1 Home**
  - **2 UCTA**.

The workstation console shows the UCTA is *Homing* and the DxC is in *Standby*.

12 Verify that the piercer probe is installed correctly.

Replace UCTA Drain Pump Tubing

The DxC system and the UCTA must be in *Standby*.

Materials Required:

- Drain Pump Tubing Set (PN A29657)

1 Drain the Drain Pump:

- Select:
  - **Utils** from the menu bar
  - **4 Diagnostics**
  - **Sample System** in the **Functional Area** list
  - **UCTA Diagnostics** in the **Sub Functional Area** list
  - **1 Electro-Mechanical Test**
  - **Sensors Test**
  - **Drain Pump** check box.

  The Drain Pump status changes to *On*.

2 Allow fluid to drain for approximately 30 seconds. Open the door below the UCTA. The drain pump is located on the lower left. Visually verify that tubing is empty.

Figure 12.58 Drain Pump Components

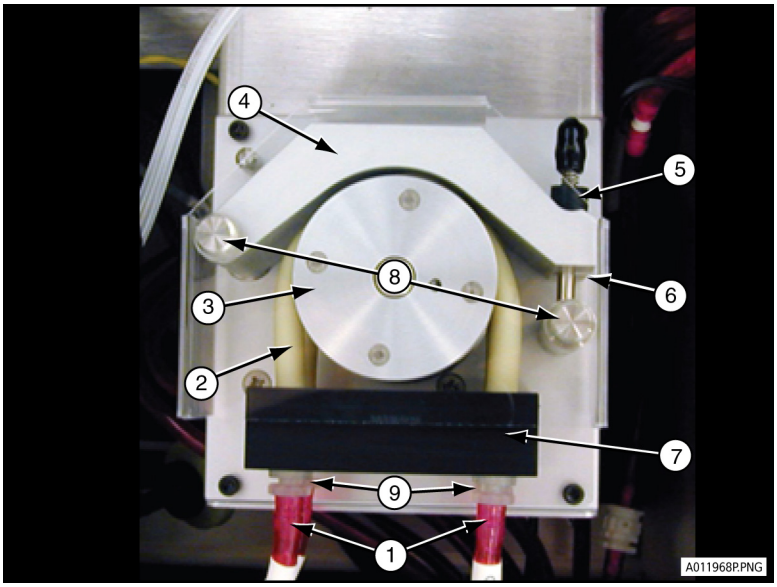

1. Drain Hoses
2. Drain Tubes
3. Roller
4. Track
5. Locking Knob
6. Tension Arm
7. Tube Holder
8. Mounting Screws
9. Drain Tube Connectors

3 Deselect the **Drain Pump** check box to stop pumping. The Drain Pump status return to *Off.*

4 Loosen the captive Mounting Screws (8) and remove the clear plastic Drain Pump cover.

⚠ CAUTION

DO NOT loosen the locking knob (5) Figure 12.58. If the locking knob is loose, the drain pump may not work correctly.

5 Refer to Figure 12.58 and Figure 12.59.

- Pull the Locking Knob (5) down and to the right, to release the Track. The Track is now loose.
- Pull the Track toward you to remove it.

Figure 12.59 Release the Track

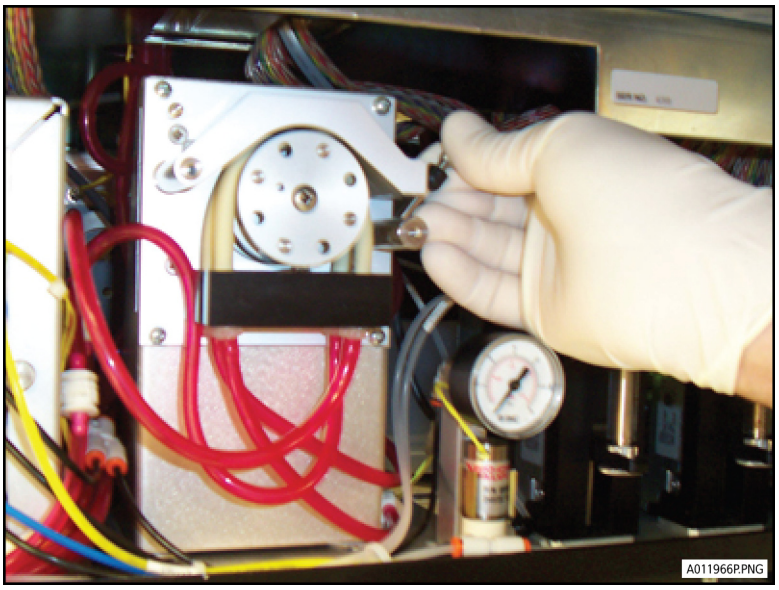

6 Hold the Drain Tube Connectors for the front line. Pull the Drain Tube (2) down and away from the black Tube Holder. Refer to Figure 12.58.

7 Repeat Step 6 for the rear line.

8 Disconnect one side of the rear Drain Tube from the fitting on the Drain Hose (1). Refer to Figure 12.58.

9 Attach the Drain Hose to a new Drain Tube.

10 Disconnect the other side of the rear Drain Tube from the Drain Hose.

11 Attach the Drain Hose to the other side of the new Drain Tube.

12 Repeat Steps 8-11 for the front Drain Tube.

NOTE Be careful to maintain correct orientation of the Drain Tubes.

13 Install the rear Drain Tube by pushing the tube into the rear slot of the Roller. Then install the front tube in the front Roller slot. Orient the tubes on the Roller carefully to ensure proper operation.

14 Hold the Drain Tube Connectors and pull down and reattach the Drain Hoses to the Tube Holder.

15 Replace the Track. Refer to Figure 12.58.

16 Swing the Tension Arm back into its Track. Check that the Tension Arm is locked into position. Refer to Figure 12.58.

17 Select **Close** to exit the Sensors Test screen. Select **Exit F10** to exit the Diagnostics screen.

18 Select**1 Prime**.

19 Select:

- **All UCTA Wash** from the Prime dialog box.
- Type **10** in the **Number of primes to repeat** field.
- **Start Prime**.

20 As the UCTA primes, check the Drain Pump tubing connections for leaks.

If leaks occur, tighten the connection or replace any damaged tubes, starting again at Step 1 above.

21 Select **Exit F10**.

22 Verify pump operation:

- Select:
  - **Utils** from the menu bar
  - **4 Diagnostics**
  - **Sample System** in the **Functional Area** list
  - **UCTA Diagnostics** in the **Sub Functional Area** list
  - **1 Electro-Mechanical Test**
  - **Sensors Test**
  - **Drain Pump** check box.

23 Visually inspect that the waste sump level is dropping and there are no leaks. The waste sump is located in the lower right bottom shelf of the UCTA.

24 Deselect the **Drain Pump** check box to stop pumping.

25 Select **Close** to exit the Sensors Test screen. Select **Exit F10** to exit the Diagnostics screen.

26 Re-install the drain pump cover.

Replace UCTA Sample and Wash Station Syringes

Replace the UCTA Syringes every year. This procedure is usually performed by a Beckman Coulter Service representative as part of preventive maintenance. The syringes should be replaced one at a time. Complete the entire procedure for one syringe before replacing the next syringe.

NOTE Follow any assembly instructions that come with the package, if syringe components are packaged separately.

Material Required:

- 4 UCTA syringes

The UCTA and DxC must be in *Standby*.

1 Open the door below the UCTA and locate the syringe you want to replace.

Figure 12.60 UCTA Syringes

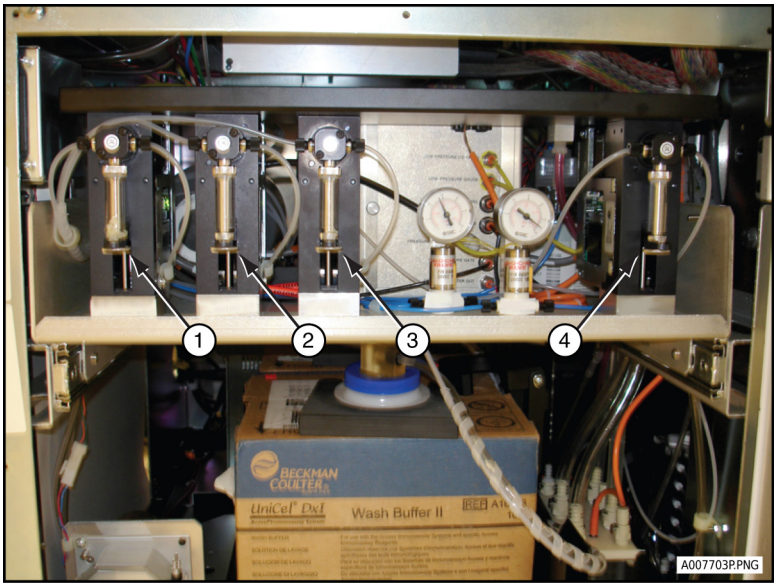

1. Left Sample Syringe
2. Right Sample Syringe
3. Left Wash Syringe
4. Right Wash Syringe

2 Select **Utils** from the menu bar and select **4 Diagnostics**.

The UCTA and DxC status shows *Diagnostics* in the upper left corner of the screen.

If not, select **Exit F10** on the Diagnostics screen and repeat Step 2 until both the UCTA and DxC status show *Diagnostics*.

3 Select **Sample System** in the **Functional Area** field.

4 Select **UCTA Diagnostics** in the **Sub-Functional Area** field.

5 Select **1 Electro-Mechanical Test**.

6 Select **Devices**.

7 Completely loosen the syringe drive coupling at the base of the syringe you want to replace. Refer to Figure 12.61.

8 Select the appropriate syringe:

- **10 Sample Syringe 1 (Right)**
- **11 Sample Syringe 2 (Left)**
- **12 Wash Syringe1 (Right)**
- **13 Wash Syringe 2(Left)**

9 Select **5 Move syringe valve to Input position**. The valve moves to the input position.

10 Select **3 Aspirate volume**.

11 The Syringe Volume dialog box appears.

- Type **1** in the **Speed** field.
- Type **1** in the **Acceleration** field.
- Type **2000** in the **Volume** field and press (Enter).
- Select **OK** to accept the entries and close the dialog box.

The syringe valve rotates to stop the liquid flow, while the syringe drive (2) Figure 12.61, moves down to allow access to the syringe plunger.

Figure 12.61 Syringe Remove/Replace

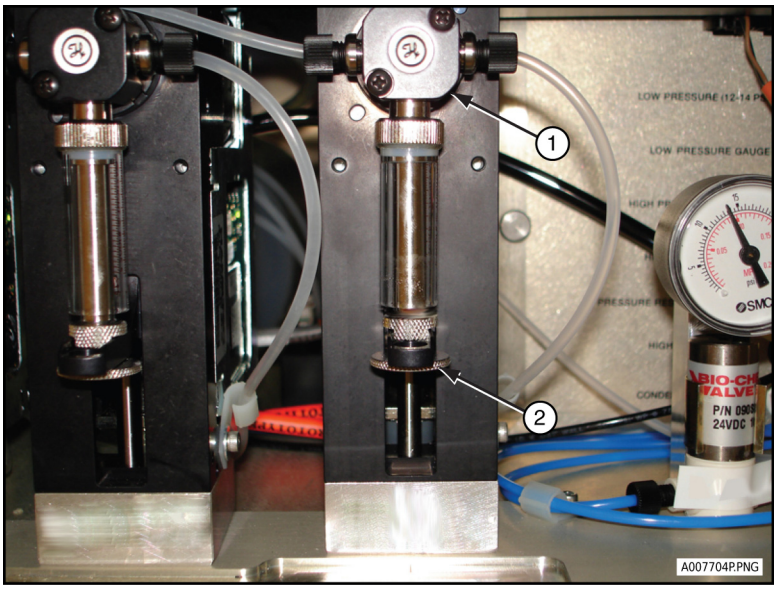

1. Valve Coupling
2. Syringe Drive Coupling

12 Refer to Figure 12.61, (1). Turn the valve coupling until the syringe is free.

13 Discard the used syringe assembly.

14 Insert the new syringe into the valve coupling. Turn the coupling to tighten.

15 Pull down the plunger of the syringe and insert it into the syringe drive coupling. Ensure proper orientation of the syringe plunger in the syringe drive coupling. Tighten the coupling.

NOTE Make sure the couplings are turned until they are tight; otherwise, the syringes leak.

16 To replace the next syringe:

- Select **Cancel** on the Sample Syringe screen to return to the Devices screen.
- Repeat Steps 8-16.

OR

If you have finished syringe replacement continue to step 18.

17 Make sure the UCTA canopy is closed.

18 Select **Cancel** from the Devices screen.

- Select **Close** on the Electro-Mechanical screen to return to the Diagnostics screen.
- Select **Exit F10** to exit Diagnostics.

The UCTA status shows *Homing* and the DxC status shows *Standby*. In the lower left corner of the screen, *Working* shows.

19 When homing is complete, the UCTA status shows *Standby*.

20 Select **1 Prime**.

21 Select **All UCTA Wash** and type **2** for the **Number of primes to repeat** field. Select **Start Prime**.

22 Check the syringes for leaks.

If leaks occur, tighten the valve couplings and repeat Steps 19-22.

23 When syringe priming is complete, select **Exit F10**. Then select **Main** to return to the Main screen.

24 Close the door below the UCTA.

Other: 5,000 Test Interval Maintenance

- Replace DxI Duck Bill Valve
- Run DxI Clean Routine

Replace DxI Duck Bill Valve

Perform this procedure at the DxI console and instrument. Replace the duck bill valve 5,000 tests after the valve was last replaced, or as instructed by the system documentation or by a Beckman Coulter Technical Support Representative.

NOTE If the 10,000 and 5,000 test interval maintenance procedures are scheduled for the same day, begin with the 10,000 test interval maintenance procedures. The 10,000 test interval procedures include a step to perform 5,000 test interval maintenance. Perform the daily maintenance procedures after you complete the 10,000 and 5,000 test interval procedures.

⚠ WARNING

This procedure may expose you to potentially infectious materials. Handle and dispose of biohazard materials according to proper laboratory procedures. Use proper hand, eye and facial protection.

IMPORTANT Opening the covers abruptly shuts off power to the upper cabinet, and may cause damage if the system is not in the proper mode and the user interface is not displaying the correct screen. Follow this procedure carefully.

Before you begin this procedure, confirm that you have a replacement valve in your CARE kit. If there is no replacement valve, do not perform this procedure. Order a new set of valves and replace the duck bill valve at your earliest opportunity.

Required Materials

- An empty sample rack
- Lint-free tissues
- Duck bill valve

The system must be in *Ready* or *Not Ready* mode.

Remove Duck Bill Valve

Use this procedure to remove the duck bill valve.

NOTE If you are continuing to this procedure from the 10,000 test maintenance, begin at step 8.

---

1 At the DxI console select **Diagnostics F7**, then select **Device Diagnostics F4** to display the Device Diagnostics screen.

---

2 Open the right main upper cover.

---

3 Locate the dispense probe plate. The dispense probe plate is the lower plate, which contains the D1-D3 dispense probes.

Figure 12.62 Dispense Probe Plate

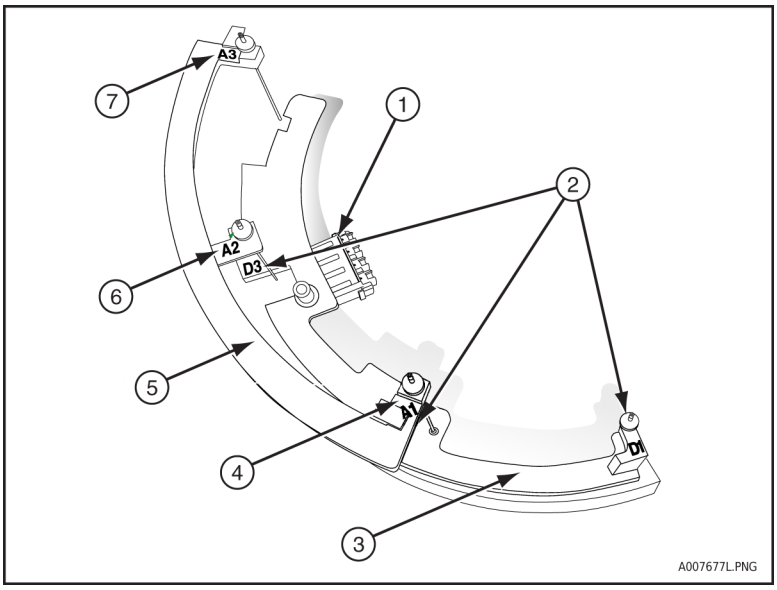

1. Sample rack used to position the dispense probe plate resting on the incubator cover
2. D1, D2, D3 dispense probes
3. Dispense probe plate (lower plate)
4. A1 aspirate probe on the A1 aspirate probe support arm
5. Aspirate probe plate (upper plate)
6. A2 aspirate probe on the A2 aspirate probe support arm
7. A3 aspirate probe on the A3 aspirate probe support arm

⚠ CAUTION

Do not lift up on the dispense probe plate at the D1 dispense probe position. The dispense probe plate can bend when lifted at this position.

4 Locate the D2 dispense probe. At the D2 dispense probe position, place your fingers underneath the dispense probe plate and lift up gently.

⚠ CAUTION

Be careful not to brush against the D1 dispense probe or tubing while you position the sample rack. The probe will not function properly if it is bent, or if the tubing is routed incorrectly, kinked, punctured, or torn.

5 Carefully slide a sample rack between the dispense probe plate and the incubator cover. Position the rack directly in front of the D3 dispense probe.

⚠ CAUTION

Handle the A1 aspirate probe and tubing with extreme care. The probe is fragile and will not function properly if it is bent, or if the tubing is routed incorrectly, kinked, punctured, or torn.

6 Gently grasp the A1 aspirate probe fitting, located just above the aspirate probe plate. Turn the fitting counterclockwise until the probe is loose.

7 Carefully lift the A1 aspirate probe out of the aspirate probe plate and set the probe down on several clean, lint-free tissues.

8 Locate the wash collar in the dispense probe plate, to the right of the D2 dispense probe.

Figure 12.63 Wash Collar and Duck Bill Valve

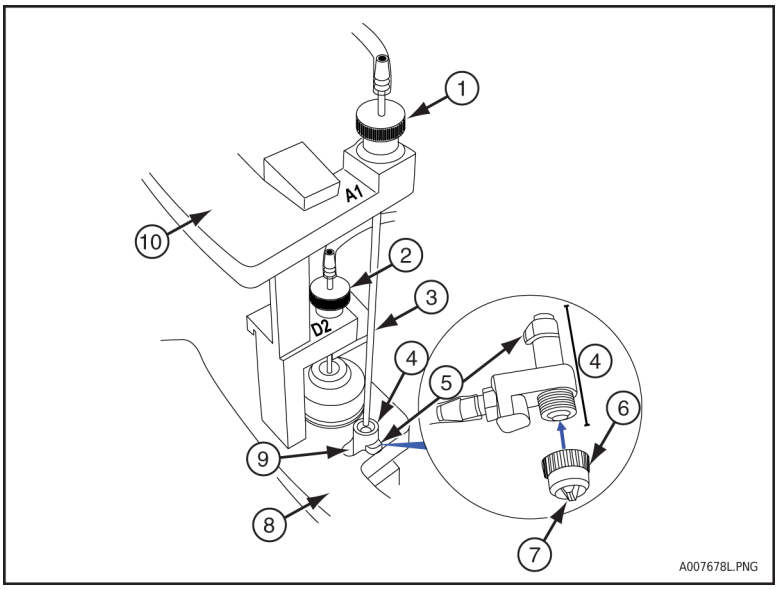

1. A1 aspirate probe fitting
2. D2 dispense probe fitting
3. A1 aspirate probe
4. Wash collar
5. Plastic shoulder of the wash collar
6. Retaining nut
7. Duck bill valve
8. Dispense probe plate
9. Key slot
10. Aspirate probe plate

9 Grasp the collar from beneath the dispense probe plate, and turn it clockwise until the plastic shoulder is aligned with the key slot in the dispense probe plate.

10 Carefully pull the wash collar down through the key slot. The duck bill valve is on the underside of the collar.

11 Turn the retaining nut counterclockwise to remove the nut from the wash collar.

12 Lift the duck bill valve out of the retaining nut. Discard the valve in your biohazard waste.

Install New Duck Bill Valve

Use this procedure to install a new duck bill valve.

1 Insert a new duck bill valve into the retaining nut. Be sure the angled sides of the new valve point through the opening in the nut.

Figure 12.64 Insert the Duck Bill Valve

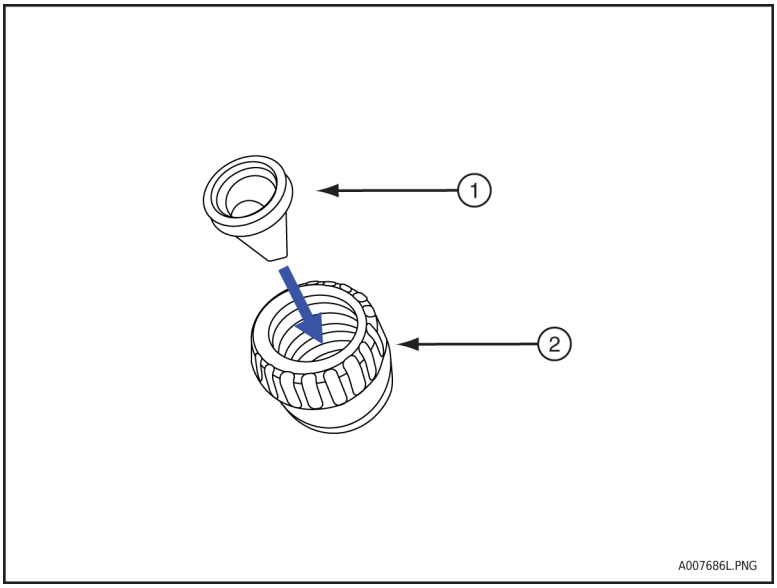

1. Duck bill valve (angled sides pointing down)
2. Retaining nut

2 To attach the nut to the wash collar, turn the retaining nut clockwise until it is finger-tight.

WARNING

If the retaining nut is not finger-tight, the duck bill valve could fall into the instrument during sample processing. This may affect your results.

3 Inspect the duck bill valve. The valve should be completely closed, or open no more than a few thousandths of an inch (no more than the width of the valve on either side of the opening).

4 If the valve is open too far, remove it and replace it with a new valve. Discard the faulty valve in your biohazard waste.

5 Grip the wash collar from beneath the dispense probe plate and align the plastic shoulder with the key slot. Carefully push the wash collar through the opening.

6 Turn the collar counterclockwise to secure the plastic shoulder on the dispense probe plate.

7 Grip the A1 aspirate probe by the probe fitting and lift the probe off the lint-free tissue. Carefully lower the probe through the opening in the aspirate probe plate. Turn the fitting clockwise until it is finger-tight. Be careful not to overtighten the fitting.

8 Verify the A1 aspirate probe deflection. Grip the aspirate probe above the probe fitting and lift the probe approximately 1/4 inch (6.35 mm), and then release the probe. The probe should snap back into position.

- If the probe does not snap back, the wash collar may not be positioned correctly in the key slot. Check the wash collar position (Refer to Figure 12.63) and correct if necessary. Verify the probe deflection again.
- If the wash collar is not the problem, the aspirate probe could be bent. It cannot be straightened. Replace the aspirate probe with another clean probe. Verify the probe deflection again.
- If the probe does not snap back after verifying the wash collar position and replacing the probe, contact Beckman Coulter Technical Support for assistance.

9 Record all maintenance in the Electronic Scheduled Maintenance Log.

10 If you are performing the 10,000 test interval maintenance, continue with the Remove and Inspect DxI Dispense Probes procedure next.

11 If you are not continuing with the 10,000 test interval maintenance procedures, verify that all aspirate and dispense probe tubing is routed correctly.

Figure 12.65 Correctly Routed Dispense Probe Tubing Example

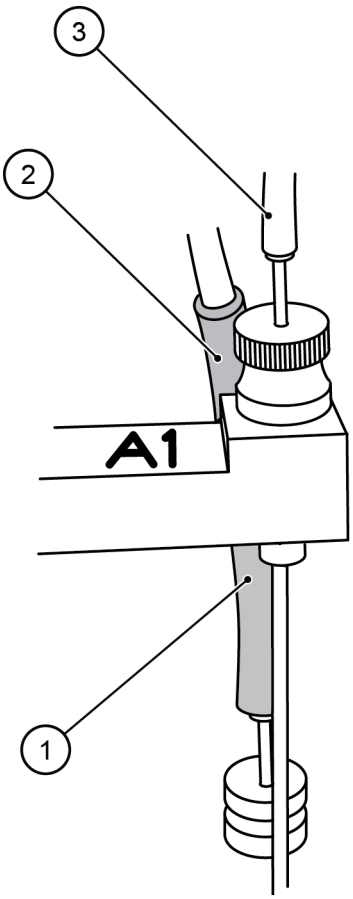

1. **Correct:** Dispense probe strain relief (in gray)
2. **Correct:** The dispense probe strain relief is not routed beneath the A1 aspirate probe plate and support arm
3. **Correct:** A1 aspirate probe tubing is routed above the aspirate probe plate and support arm

Figure 12.66 Incorrectly Routed Dispense Probe Tubing Example

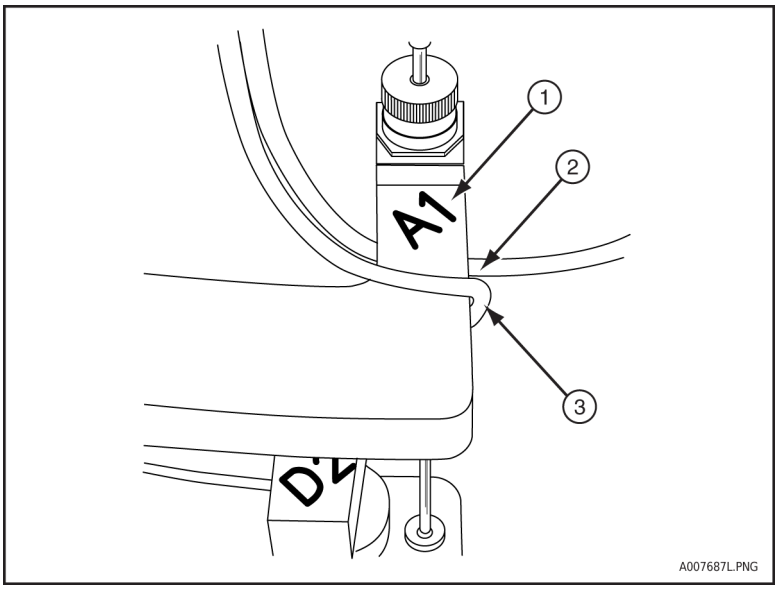

1. A1 aspirate probe plate support arm
2. **Incorrect:** D1 dispense probe tubing routed beneath the A1 aspirate probe plate support arm.
3. **Incorrect:** D2 dispense probe tubing routed beneath the A1 aspirate probe plate support arm

- The D1 dispense probe tubing should be routed above the aspirate probes plate and A1 aspirate probe support arm.
- The D2 and D3 dispense probe tubing should be routed behind and not beneath the A1 and A2 aspirate probe support arms, respectively.

If the tubing is not routed correctly, remove the dispense probes and inspect for kinked, punctured, or torn tubing.

- If the tubing is damaged, contact Beckman Coulter Technical Support for assistance.
- If the tubing is not damaged, return the dispense probes to their proper positions and route the tubing correctly.

12 Remove the sample rack from beneath the dispense probe plate.

13 Close the right main upper cover, exit the Device Diagnostics screen, and Initialize the DxI System.

14 Perform Daily Maintenance, and then Verify DxI System Performance.

Initialize the DxI System

Perform this procedure at the DxI console and instrument.

Use this procedure to initialize the DxI system.

NOTE The system needs at least one substrate bottle to complete the initialization routine. Initializing without substrate will cause the instrument to go into the Not Ready mode.

IMPORTANT Once initialization begins, do not select any buttons or press any keys until initializing is complete.

IMPORTANT Once initialization begins, do not open the solid waste door. Opening the solid waste door will cancel initialization and the system will enter the Not Ready mode.

The system can be in *Ready* or *Not Ready* mode.

NOTE If the system is in *Ready* mode, but the SPU is busy, the system cannot be initialized.

NOTE If the system does not correctly initialize, contact Beckman Coulter Technical Support.

---

1 At the DxI console select **Diagnostics F7**, then select **Initialize System F1** to display the Initialize System window.

---

2 Select sample wheel and analytical module clean out options for RVs.

- For a standard initialization, select the **Expired Only** option for the sample wheel and the **In Progress Only** option for the analytical module. During initialization, the system removes only expired sample RVs from the sample wheel and all identified RVs from the analytical module.
- Only if a Beckman Coulter Technical Support Representative instructs you to do so, select the **All Positions** options for both the sample wheel and the analytical module. If the non-volatile random access memory (NVRAM) is compromised and the system cannot verify vessel positions, you may need to select this option to check for and remove the RVs from every position in the sample wheel and the analytical module.

---

3 (Optional) Select the **Remap** box to re-establish the location and identity of every reagent pack in reagent inventory during system initialization. Typical reasons for remapping:

- The reagent gripper dropped a pack in the reagent storage area.
- The door to the reagent storage area has been opened and packs have been moved, added, or removed manually.

  NOTE The reagent storage cover should only be removed as directed by Technical Support or by system documentation.

- The power to the system has been lost for more than 48 hours.
- Power to the system is lost while a pack was being moved in the reagent storage area.

- Beckman Coulter Technical Support directed you to remap.

  NOTE System initialization with the Remap box selected may take up to 20 minutes.

4 Select **OK F1**.

The system begins initialization and displays progress in the **Initialization Status** fields. When initialization is complete, the system returns to the *Ready* mode.

If the system does not return to the *Ready* mode, contact Beckman Coulter Technical Support.

5 Select **Yes F1** to confirm that you are done with the initialization and to return to the Main Menu.

Verify DxI System Performance

Verify system performance after you complete maintenance on the duck bill valve or the aspirate and dispense probes, and before you process any samples. If you are performing other maintenance procedures, verify performance after you finish all scheduled maintenance.

Use this procedure to verify DxI system performance.

The system must be in *Ready* mode.

1 Run DxI Clean Routine.

NOTE If you just completed daily maintenance, you have already completed this step. Do not run a second clean routine.

2 Run QC for all assays you use to analyze patient samples. (See Run Control Samples.) Evaluate out-of-range QC results.

3 Record all maintenance in the Electronic Scheduled Maintenance Log.

Other: 10,000 Test Interval Maintenance

- Install Clean DxI Aspirate Probes
- Clean the Aspirate Probes
- Remove and Inspect DxI Dispense Probes
- Check DxI Pump Fittings - Wash Buffer Reservoir
- Check DxI Upper Aspirate Peri-Pump Fittings

- Check DxI Reagent Pipettors and Clean Wash Towers
- Check DxI for Fallen RVs
- Check DxI Liquid Waste Drawer
- Check DxI Wash Buffer Supply Drawer
- Clean DxI Air Filter

Install Clean DxI Aspirate Probes

NOTE If the 10,000 and 5,000 test interval maintenance procedures are scheduled for the same day, begin with the 10,000 test interval maintenance procedures. The 10,000 test interval procedures include a step to perform 5,000 test interval maintenance. Perform the daily maintenance procedures after you complete the 10,000 and 5,000 test interval procedures.

If your laboratory runs tests for HIV antibody levels, you will install clean aspirate probes each week as part of special weekly maintenance instead of installing clean probes during 10,000 test interval maintenance.

Perform this procedure at the DxI console and instrument.

As the DxI processes samples, paramagnetic particles can accumulate inside the aspirate probe or on the probe exterior, affecting system performance. Use this procedure to install clean aspirate probes weekly if your laboratory runs the test for HIV antibody levels, or as part of the 10,000 test interval maintenance.

Always keep a spare set of new or cleaned aspirate probes in the DxI CARE kit.

Remove Aspirate Probes

Use this procedure to remove the aspirate probes.

⚠ WARNING

This procedure may expose you to potentially infectious materials. Handle and dispose of biohazard materials according to proper laboratory procedures. Use proper hand, eye and facial protection.

IMPORTANT Opening the DxI analyzer covers abruptly shuts off power to the upper cabinet, and may cause damage if the system is not in the proper mode and the user interface is not displaying the correct screen. Follow this procedure carefully.

- Handle each aspirate probe and its tubing with extreme care. The probes are fragile and will not function properly if they are bent, or if the tubing is routed incorrectly, kinked, punctured, or torn.
- Remove the aspirate probes one at a time. Do not replace all three probes at once.
- Remove aspirate probes from the aspirate probe plate before you disconnect the tubing fittings from the manifold. Fluid may leak out of the probe and onto the analytical module cover if you disconnect a fitting while an aspirate probe is still in the plate.
- Remove the A3 aspirate probe from the probe plate with extreme care. The probe is difficult to reach and it can bend easily if you do not handle it carefully.
- Be sure that you do not route tubing between the aspirate and dispense probe plates. Tubing routed between the probe plates will be pinched and may tear open during normal operation.

The system may be in *Ready* or *Not Ready* mode.

---

1 At the DxI console select **Diagnostics F7**, then select **Device Diagnostics F4** to display the Device Diagnostics screen.

---

2 Open the right main upper cover.

NOTE You can open the left main upper cover to allow more light into the instrument.

---

3 Locate the dispense probe plate. The dispense probe plate is the lower plate, which contains the D1-D3 dispense probes.

Figure 12.67 Dispense Probe Plate

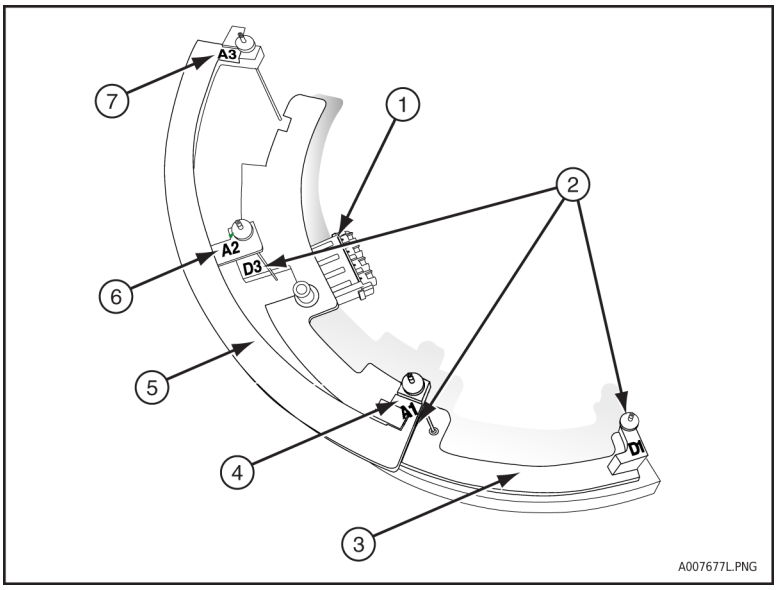

1. Sample rack used to position the dispense probe plate resting on the incubator cover
2. D1, D2, D3 dispense probes
3. Dispense probe plate (lower plate)
4. A1 aspirate probe on the A1 aspirate probe support arm
5. Aspirate probe plate (upper plate)
6. A2 aspirate probe on the A2 aspirate probe support arm
7. A3 aspirate probe on the A3 aspirate probe support arm

⚠ CAUTION

Do not lift up on the dispense probe plate at the D1 dispense probe position. The dispense probe plate can bend when lifted at this position.

4 Locate the D2 dispense probe. At the D2 dispense probe position, place your fingers underneath the dispense probe plate and lift up gently.

⚠ CAUTION

Be careful not to brush against the D1 dispense probe or tubing while you position the sample rack. The probe will not function properly if it is bent, or if the tubing is routed incorrectly, kinked, punctured, or torn.

5 Carefully slide a sample rack between the dispense probe plate and the incubator cover. Position the rack directly in front of the D3 dispense probe.

6 Locate the three aspirate probes on the aspirate probe plate. The probes are labeled A1, A2, and A3 in sequence from right to left.

⚠ CAUTION

For Steps 7 to 12, remove only one aspirate probe at a time. Do not remove all three probes at once.

7 Gently grasp one of the probe fittings and turn it counterclockwise until the probe is loose.

Figure 12.68 Loosen a Probe Fitting

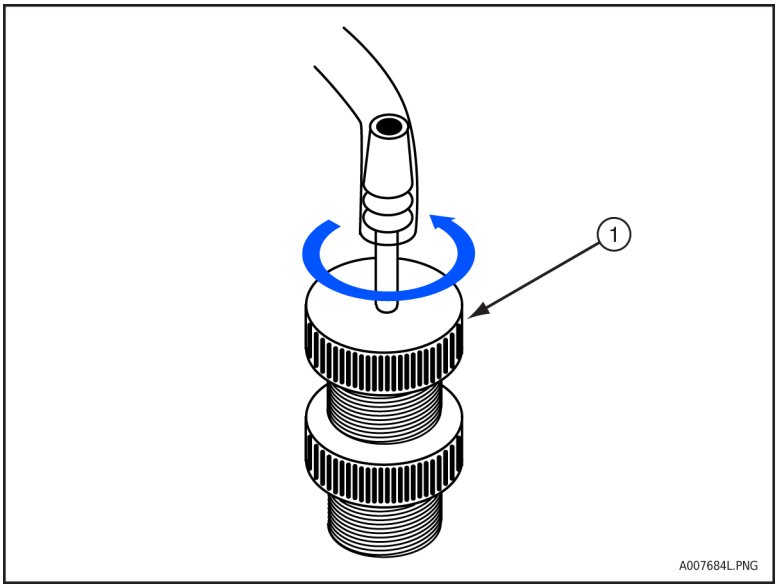

1. Probe fitting

8 Lift the aspirate probe out of the aspirate probe plate and set the probe down on several clean, lint-free tissues.

9 Locate the aspirate and dispense probe manifold by following the aspirate probe tubing to the manifold. The manifold is an upright plate positioned near the aspirate and dispense probe plates. The manifold holds the probe tubing in a stationary position with a fitting connection and routing clamps.

10 Find the routing clamp that secures the probe tubing and lift up gently on the aspirate probe tubing to release it from the clamp.

Figure 12.69 Aspirate and Dispense Probe Manifold

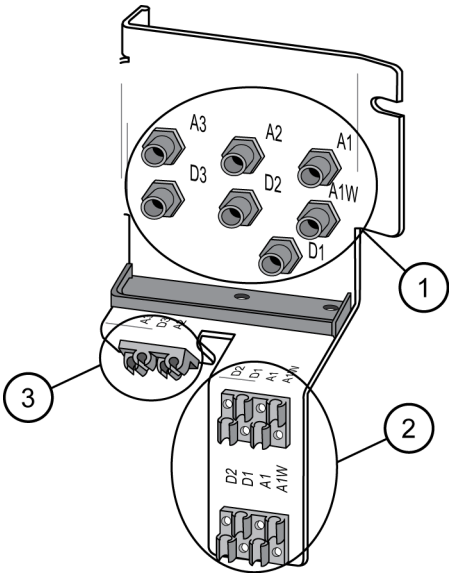

1. Aspirate and dispense probe tubing fitting connections (7)
2. Front manifold plate with aspirate and dispense probe tube routing clamps (secures 4 lines of tubing)
3. Rear manifold plate with aspirate and dispense probe tube routing clamps (secures 3 lines of tubing)

NOTE

- The A1 aspirate probe has two lines of tubing. Both lines are held in place in the front tube routing clamps located on the front manifold plate.
- The A2 and A3 aspirate probes each have one line of tubing secured by a routing clamp located on the rear manifold plate.

⚠ CAUTION

Be sure that you remove the aspirate probe from the aspirate probe plate before you disconnect the tubing fitting from the manifold. Fluid may leak out of the probe and onto the analytical module cover if you disconnect a fitting while its aspirate probe is still in the plate.

11 Turn the aspirate probe tubing fitting counterclockwise until it unlocks. Gently pull the fitting toward you to disconnect the aspirate probe and tubing from the aspirate and dispense probe manifold.

NOTE

- The two lines of the A1 aspirate probe disconnect from positions A1 and A1W.
- The A2 and A3 aspirate probe lines disconnect from positions A2 and A3, respectively.
- The line of tubing for the probe that disconnects from position A1W is identified with a yellow sleeve. The tubing for the probes that disconnect from positions A1, A2, and A3 is identified with a white sleeve.

12 Install a clean aspirate probe. See Install Clean Aspirate Probes.

13 Repeat Steps 7-12 to remove and install the remaining aspirate probes.

Install Clean Aspirate Probes

Always keep a spare set of new or cleaned aspirate probes in the DxI CARE kit. Use this procedure to install a clean aspirate probe as soon as you remove a used probe.

WARNING

This procedure may expose you to potentially infectious materials. Handle and dispose of biohazard materials according to proper laboratory procedures. Use proper hand, eye and facial protection.

IMPORTANT

- Handle each aspirate probe and its tubing with extreme care. The probes are fragile and will not function properly if they are bent, or if the tubing is routed incorrectly, kinked, punctured, or torn.
- Remove the A3 aspirate probe from the probe plate with extreme care. The opening in the probe plate is difficult to reach and could bend easily if you do not handle it carefully.
- Be sure that you do not route tubing between the aspirate and dispense probe plates. Tubing routed between the probe plates will be pinched and may tear open during normal operation.

1 Connect the tubing fitting to the aspirate and dispense probe manifold:

Locate the white or yellow colored sleeve attached to the aspirate probe tubing, and check the probe number printed on the sleeve.

Insert the aspirate probe tubing fitting into its corresponding position on the aspirate and dispense probe manifold. The probe number on the tubing fitting sleeve should match the number on the fitting connection on the manifold. Turn the fitting clockwise until it locks in place to connect the tubing fitting to the probe manifold.

Figure 12.70 Aspirate and Dispense Probe Manifold

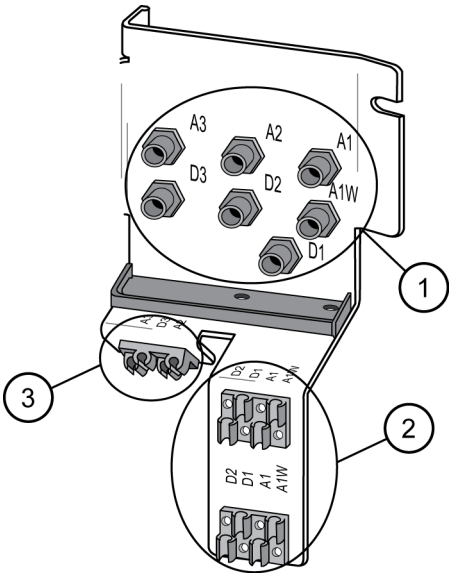

1. Aspirate and dispense probe tubing fitting connections (7)
2. Front manifold plate with aspirate and dispense probe tube routing clamps (secures 4 lines of tubing)
3. Rear manifold plate with aspirate and dispense probe tube routing clamps (secures 3 lines of tubing)

NOTE

- The A1 aspirate probe connects to positions A1 and A1W.
- The A2 and A3 aspirate probes connect to positions A2 and A3, respectively.
- The A1W tubing is identified with a yellow sleeve. The A1, A2, and A3 tubing is identified with a white sleeve.

---

2 Secure the aspirate probe tubing to its routing clamp:

For the A1, A1W, A2, and A3 probe tubing, center the colored sleeve over the appropriate routing clamp. Be sure the routing clamp corresponds to the probe number printed on the sleeve.

NOTE

- Lock the A1 and A1W aspirate probe tubing in place in the front tube routing clamp.
- Lock the A2 and A3 aspirate probe tubing in place in the rear tube routing clamps.

Press down gently on the colored sleeve to secure it to the clamp.

NOTE The front manifold plate contains two clamps. Secure the tubing to both clamps.

Align the lower section of the A1 and A1W tubing over the lower routing clamps on the front manifold plate, then press down gently on the tubing to secure it to the clamp. The lower section of the A1 and A1W tubing does not have a colored sleeve.

⚠ CAUTION

In the following steps, do not return the A1 aspirate probe to its position in the probe plate if you are performing your 5,000 test interval maintenance procedures next. Let the probe rest on several clean, lint-free tissues until you are instructed to return the probe during 5,000 test interval maintenance. Repeated handling increases the risk of damaging the probe or tubing.

3 Correctly route the aspirate probe tubing above the aspirate probe plate. Any tubing routed between the aspirate and dispense probe plates will be pinched and may tear open during normal operation.

Figure 12.71 Correctly Routed Dispense Probe Tubing Example

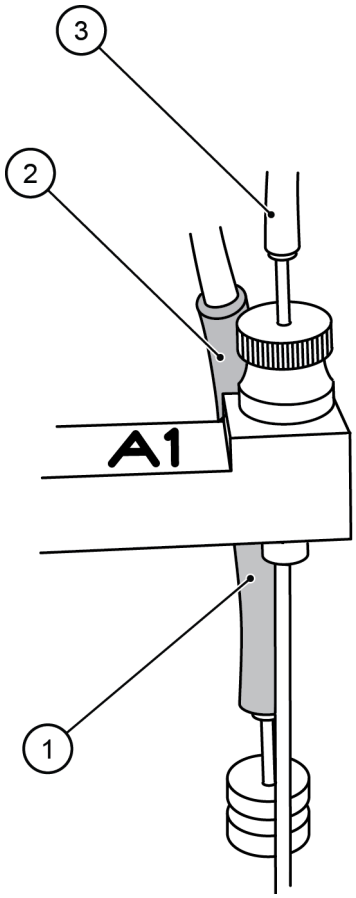

1. **Correct:** Dispense probe strain relief (in gray)
2. **Correct:** The dispense probe strain relief is not routed beneath the A1 aspirate probe plate and support arm
3. **Correct:** A1 aspirate probe tubing is routed above the aspirate probe plate and support arm

NOTE

- Route the D1 dispense probe tubing above the aspirate probe plate and A1 aspirate probe support arm.
- Route the D2 and D3 dispense probe tubing behind and not beneath the A1 and A2 aspirate probe support arms, respectively.
- Each dispense probe is fitted with a strain relief, which helps route the dispense probe tubing toward the aspirate and dispense probe manifold. Be sure the strain relief is not routed beneath the aspirate probe plate. The strain relief will be pinched and may tear open during normal operation if it is routed between the aspirate and dispense probe plates.

4 Hold the aspirate probe by the probe fitting, and then lower the probe through the opening in the aspirate probe plate.

5 Turn the probe fitting clockwise until the fitting is finger-tight. Be careful not to overtighten the fitting.

6 Be sure you do not route the aspirate tubing beneath the aspirate probe plate. Any tubing routed between the aspirate and dispense probe plates will be pinched and may tear open during normal operation.

Figure 12.72 Incorrectly Routed Dispense Probe Tubing Example

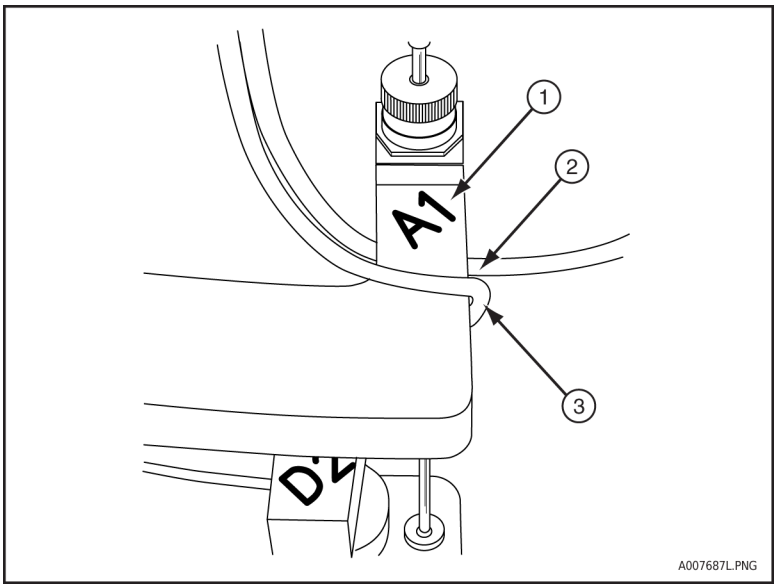

1. A1 aspirate probe plate support arm
2. **Incorrect:** D1 dispense probe tubing routed beneath the A1 aspirate probe plate support arm
3. **Incorrect:** D2 dispense probe tubing routed beneath the A1 aspirate probe plate support arm

7 Verify the aspirate probe deflection. Grip the aspirate probe above the probe fitting and lift the probe approximately 1/4 inch (6.35 mm), and then release the probe. The probe should snap back into position.

- If the probe does not snap back, the probe will not function properly and should be removed. Replace the aspirate probe with another clean probe. Then verify the probe deflection.
- If the probe does not snap back after it is replaced, contact Beckman Coulter Technical Support for assistance.

8 Remove the next used aspirate probe. See Remove Aspirate Probes.

9 Repeat Steps 1- 8 to install another clean aspirate probe. Continue until each probe is replaced.

10 Record that the procedure is complete on the Maintenance Log.

11 If you are only installing clean aspirate probes, or are installing clean aspirate probes as part of special weekly maintenance, end the procedure with the steps listed below. Otherwise, continue with Step 12 of this procedure.

Verify that the dispense probe tubing is routed correctly. See Figure 12.71 and Figure 12.72.

- The aspirate and dispense probe tubing should not be routed beneath the aspirate probe plate or aspirate probe support arms.
- Place two fingers underneath the aspirate probe plate, then gently move the plate up and down to be sure there is no interference from incorrectly routed aspirate or dispense probe tubing.
- If the tubing is routed correctly, skip to Step 12.

If the tubing is not routed correctly, remove the dispense probes from the dispense probe plate and inspect for kinked, punctured, or torn tubing. See Remove and Inspect DxI Dispense Probes.

- If the tubing is damaged, contact Beckman Coulter Technical Support for assistance.
- If the tubing is not damaged, return the dispense probes to their proper positions and route the tubing correctly.

12 If you are performing the 5,000 test interval maintenance, replace the duck bill valve now. Begin at Step 8 of the Remove Duck Bill Valve procedure.

13 If you are performing the 10,000 test interval maintenance, perform the Remove and Inspect DxI Dispense Probes procedure next.

14 If you are not continuing with either the 5,000 or 10,000 test interval maintenance procedures, remove the sample rack from beneath the dispense probe plate, close the right main upper cover and Initialize the DxI System.

Perform Daily Maintenance, and then Verify DxI System Performance.

15 Clean the Aspirate Probes you removed after you complete all other maintenance procedures.

Clean the Aspirate Probes

Use this procedure to clean the aspirate probes. Clean the used aspirate probes you removed from the DxI at your earliest opportunity. Store the clean probes in your CARE kit for the next time you install clean aspirate probes.

IMPORTANT Handle the aspirate probes and tubing with extreme care. The probes are fragile and will not function properly if they are bent, or if the tubing is routed incorrectly, kinked, punctured, or torn.

Materials Required:

- Proper hand, eye and facial protection
- Small beakers (2)
- Contrad 70* cleaning solution
- Disposable aspirate probe brush
- Deionized water
- Syringe and syringe fitting assembly
- Alcohol wipes

Preclean the Aspirate Probe Interior

WARNING

- **This procedure may expose you to potentially infectious material. Handle and dispose of biohazard materials according to proper laboratory procedures. Use proper hand, eye, and facial protection.**
- **The disposable aspirate probe brush becomes a biohazard after it has been used to clean aspirate probes. Discard the brush with your biohazard waste. Do not save a used brush for future use.**

* Contrad is a registered trademark of Decon Laboratories, Inc.

1 Fill a small beaker with approximately 20 mL of Contrad 70* cleaning solution.

2 Dip the aspirate probe brush in the Contrad 70 cleaning solution.

WARNING

In the following two steps, inserting and removing the aspirate probe brush can disperse biohazard materials that are lodged inside the probe. Work carefully to prevent scattering small droplets of these materials into the air.

3 Insert the aspirate probe brush into the tip of the aspirate probe and gently push the brush inside the probe until you feel it come to a stop.

4 Remove the brush.

5 Repeat Steps 2-4 several times on the same probe, or until no orange-colored residue is visible on the brush when it is removed from the probe.

6 Repeat Steps 2-5 for each aspirate probe.

7 Continue with the Wash the Aspirate Probe Interior procedure.

Wash the Aspirate Probe Interior

1 Fill a small beaker with approximately 50 mL of deionized water.

2 Place the aspirate probe tubing fitting in the beaker of deionized water. Be sure the fitting is completely submerged in the water.

NOTE For the A1 aspirate probe, be sure both tubing fittings are submerged.

* Contrad is a registered trademark of Decon Laboratories, Inc.

3 Attach the syringe fitting assembly to the syringe.

Figure 12.73 Syringe

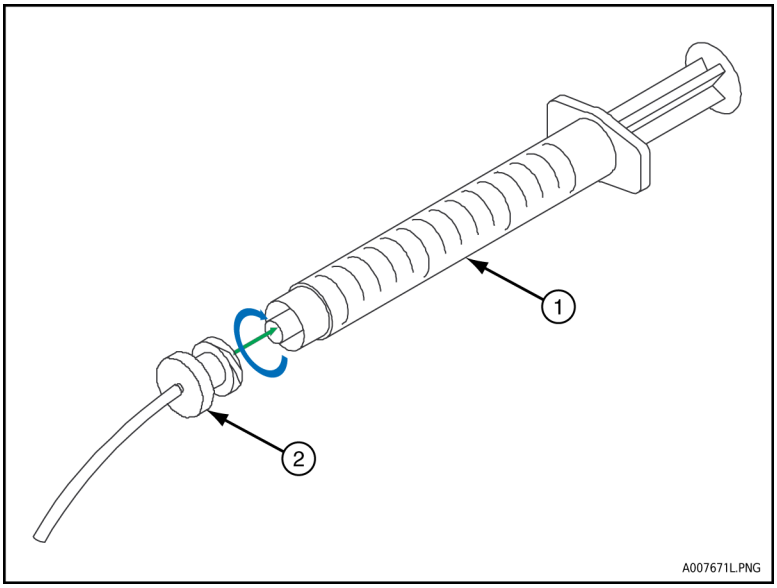

1. Syringe
2. Syringe fitting assembly

4 Push the aspirate probe tip into the open end of the tubing on the syringe fitting assembly.

⚠ CAUTION

In the following step, only draw deionized water through the probe tubing fitting. Do not push water from the syringe through the aspirate probe, because this could damage the probe and tubing fitting.

5 Draw deionized water through the probe tubing fitting and into the syringe.

6 Remove the syringe from the syringe fitting assembly and push the deionized water through the syringe and into a sink.

7 Reattach the syringe to the syringe fitting assembly and repeat Steps 5-6 two more times.

8 Remove the aspirate probe fitting from the beaker of deionized water.

9 Reattach the syringe to the syringe fitting assembly.

10 Draw air through the probe tubing fitting and into the syringe.

11 Remove the syringe from the fitting assembly, and then gently remove the assembly from the aspirate probe tip.

12 Gently wipe down the exterior of the detached aspirate probe with an alcohol wipe.

13 Position the probe upright on absorbent paper for about ten minutes to drain any residual fluid.

14 Repeat Steps 2-13 for each aspirate probe.

15 Store the clean aspirate probes in your CARE kit.

16 Record all maintenance in the Electronic Scheduled Maintenance Log.

Remove and Inspect DxI Dispense Probes

As the system processes samples, crystalline deposits can accumulate on the dispense probe exterior and affect system performance. Use this procedure to remove and inspect all three dispense probes 10,000 tests after the dispense probes were last inspected. Perform this procedure at the DxI console and instrument.

WARNING

This procedure may expose you to potentially infectious materials. Handle and dispose of biohazard materials according to proper laboratory procedures. Use proper hand, eye and facial protection.

IMPORTANT Opening the DxI analyzer covers abruptly shuts off power to the upper cabinet, and may cause damage if the system is not in the proper mode and the user interface is not displaying the correct screen. Follow this procedure carefully.

- Handle each dispense probe and its tubing with extreme care. The probes are fragile and will not function properly if they are bent, or if the tubing is routed incorrectly, kinked, punctured, or torn.
- Do not disconnect the dispense probe tubing fitting from the aspirate and dispense probe manifold. All wash buffer in the line will leak into the instrument if the fitting is disconnected.
- Use extreme care when handling the D3 dispense probe from the dispense probe plate. The probe is difficult to reach and could bend easily if it is not handled carefully.
- Remove and inspect the dispense probes one at a time. Do not try to remove and inspect all three probes at once.
- Be sure that no tubing is routed between the aspirate and dispense probe plates. Tubing routed between the probe plates will be pinched and may tear open during normal operation.

The system must be in *Ready* or *Not Ready* mode.

---

1 At the DxI console select **Diagnostics F7**, then select **Device Diagnostics F4** to display the Device Diagnostics screen.

---

2 Open the right main upper cover.

NOTE You can open the left main upper cover to allow more light into the instrument.

---

3 Locate the dispense probe plate. The dispense probe plate is the lower plate, which contains the D1-D3 dispense probes.

Figure 12.74 Dispense Probe Plate

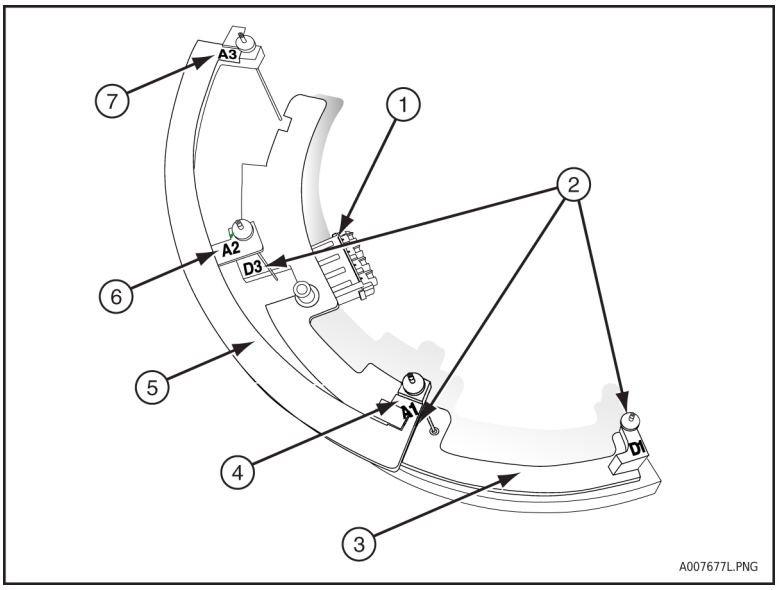

1. Sample rack used to position the dispense probe plate resting on the incubator cover
2. D1, D2, D3 dispense probes
3. Dispense probe plate (lower plate)
4. A1 aspirate probe on the A1 aspirate probe support arm
5. Aspirate probe plate (upper plate)
6. A2 aspirate probe on the A2 aspirate probe support arm
7. A3 aspirate probe on the A3 aspirate probe support arm

⚠ CAUTION

In the following steps, do not disconnect the dispense probe tubing fitting from the aspirate and dispense probe manifold. All wash buffer in the line will leak out into the instrument if the fitting is disconnected.

4 Visually inspect the dispense probes for kinked, punctured, or torn tubing, and for crystalline deposits or corrosion at the tubing connections and fittings.

Kinked, punctured, or torn tubing can affect system performance. Deposits or corrosion can indicate that a connection or fitting is leaking. Call Beckman Coulter Technical Support for assistance if you find damaged tubing, or if you find deposits or corrosion on the probe fittings.

5 Gently grasp the probe fitting located on the dispense probe plate and turn it counterclockwise until the probe is loose.

Figure 12.75 Loosen a Probe Fitting

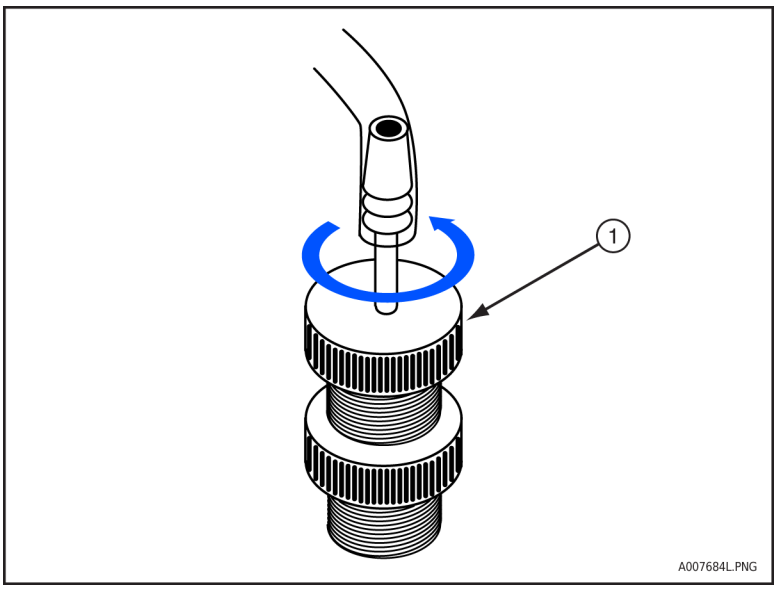

1. Probe fitting

6 Lift the dispense probe out of the dispense probe plate. Do not disconnect the dispense probe tubing from the front or rear tube routing clamps located on the aspirate and dispense probe manifold.

Figure 12.76 Aspirate and Dispense Probe Manifold

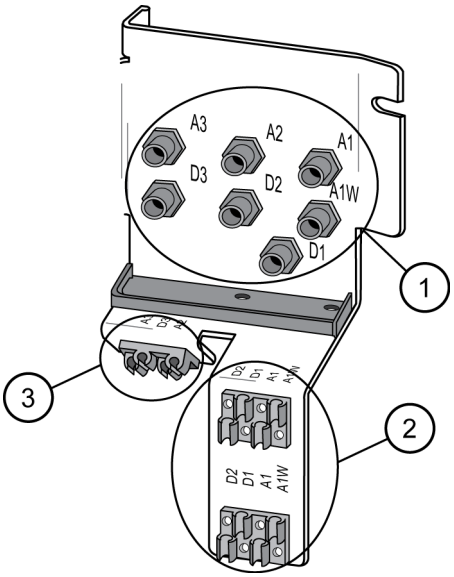

1. Aspirate and dispense probe tubing fitting connections (7)
2. Front aspirate and dispense probe tube routing clamps
3. Rear aspirate and dispense probe tube routing clamps

If the dispense probe tubing is loose, secure the tubing to the appropriate routing clamp by centering the colored sleeve over the routing clamp. Be sure the probe number printed on the yellow sleeve corresponds to the routing clamp. Then, press down gently on the tubing to hold it in place.

7 Inspect the dispense probe for crystalline deposits on the probe exterior.

8 If there are deposits on the probe, moisten a lint-free tissue with deionized water and wipe down the probe exterior.

9 Correctly route the dispense probe tubing above or behind the aspirate probe plate support arms.

Figure 12.77 Correctly Routed Dispense Probe Tubing Example

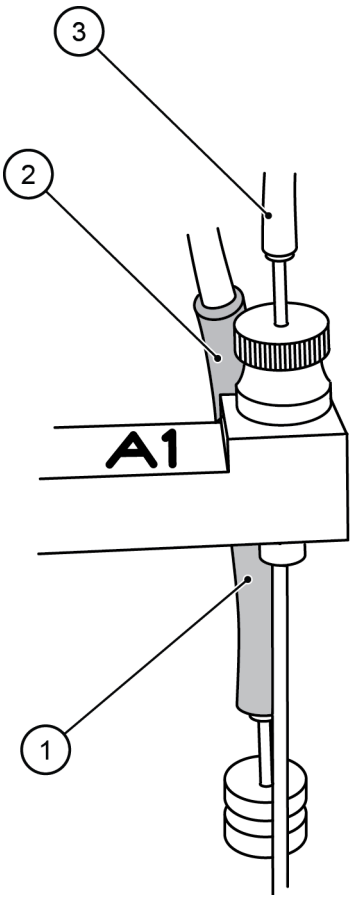

1. **Correct:** Dispense probe strain relief (in gray)
2. **Correct:** The dispense probe strain relief is not routed beneath the A1 aspirate probe plate and support arm
3. **Correct:** A1 aspirate probe tubing is routed above the aspirate probe plate and support arm

NOTE

- Route the D1 dispense probe tubing above the aspirate probe plate and A1 aspirate probe support arm.
- Route the D2 and D3 dispense probe tubing behind and not beneath the A1 and A2 aspirate probe support arms, respectively.
- Each dispense probe is fitted with a strain relief, which helps route the dispense probe tubing toward the aspirate and dispense probe manifold. Be sure the strain relief is not routed beneath the aspirate probe plate. The strain relief will be pinched and may tear open during normal operation if it is routed between the aspirate and dispense probe plates.

Figure 12.78 Incorrectly Routed Dispense Probe Tubing Example

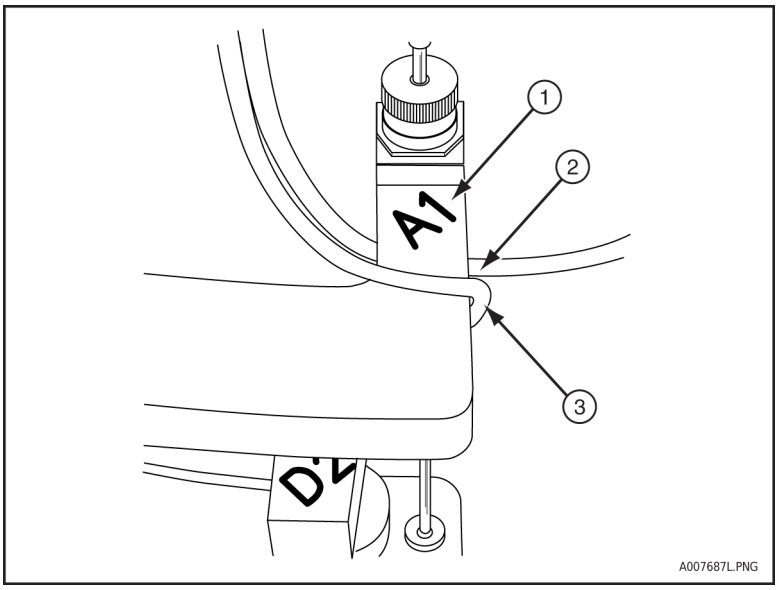

1. A1 aspirate probe plate support arm
2. **Incorrect:** D1 dispense probe tubing routed beneath the A1 aspirate probe plate support arm
3. **Incorrect:** D2 dispense probe tubing routed beneath the A1 aspirate probe plate support arm

10 Hold the dispense probe by the probe fitting, and then lower the probe through the opening in the dispense probe plate.

11 Turn the probe fitting clockwise until the fitting is finger-tight.

12 Repeat Steps 5-11 to individually remove and inspect each remaining dispense probe.

13 Record all maintenance in the Electronic Scheduled Maintenance Log.

14 Confirm that the dispense probe tubing is routed correctly.

- The aspirate and dispense probe tubing should not be routed beneath the aspirate probe plate or aspirate probe support arms.
- Place two fingers underneath the aspirate probe plate, then gently move the plate up and down to be sure there is no interference from incorrectly routed aspirate or dispense probe tubing.
- If the tubing is routed correctly, skip to Step 16 [i.e “Remove the sample rack...” below].

15 If the tubing is not routed correctly, remove the dispense probes from the dispense probe plate and inspect for kinked, punctured, or torn tubing.

- If the tubing is damaged, contact Beckman Coulter Technical Support for assistance.
- If the tubing is not damaged, return the dispense probes to their proper positions and route the tubing correctly.

16 Remove the sample rack from beneath the dispense probe plate.

17 If you are continuing with the 10,000 test interval maintenance, perform the Check DxI Pump Fittings - Wash Buffer Reservoir procedure next.

18 If you are not continuing with the 10,000 test interval maintenance, close the right main upper cover and Initialize the DxI System.

Verify DxI System Performance.

Check DxI Pump Fittings - Wash Buffer Reservoir

Use this procedure to visually inspect the pump connections at the wash buffer reservoir. The wash buffer reservoir is located beneath the left main upper cover of the DxI.

WARNING

Never wear exposed metal that can come into contact with electrical components of the instrument.

This procedure may expose you to potentially infectious materials. Handle and dispose of biohazard materials according to proper laboratory procedures. Use proper hand, eye and facial protection.

The system must be in *Not Ready* mode.

1 At the DxI console select **Diagnostics F7**, then select **Device Diagnostics F4** to display the Device Diagnostics screen.

2 Open the left main upper cover of the DxI.

3 Visually inspect the following locations for kinked tubing, and for crystalline deposits or corrosion at the tubing connections. The connections to inspect are colored red.

- Sample pump connection
- Precision pump connections
- Wash pump connections

Figure 12.79 Inspecting the Wash Buffer Reservoir Pump Connections (DxI 800)

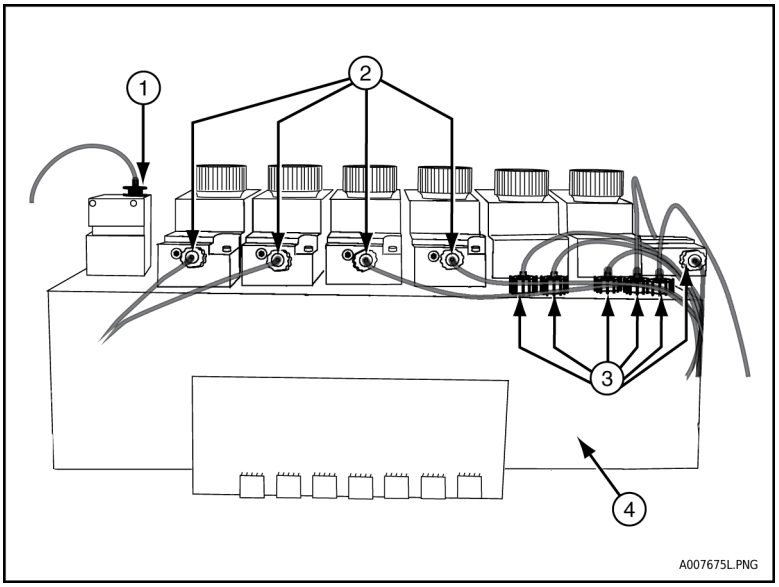

1. Sample pump connection
2. Precision pump connections (4)
3. Wash pump connections (6)
4. Wash buffer reservoir

Figure 12.80 Inspecting the Wash Buffer Reservoir Pump Connections (DxI 600)

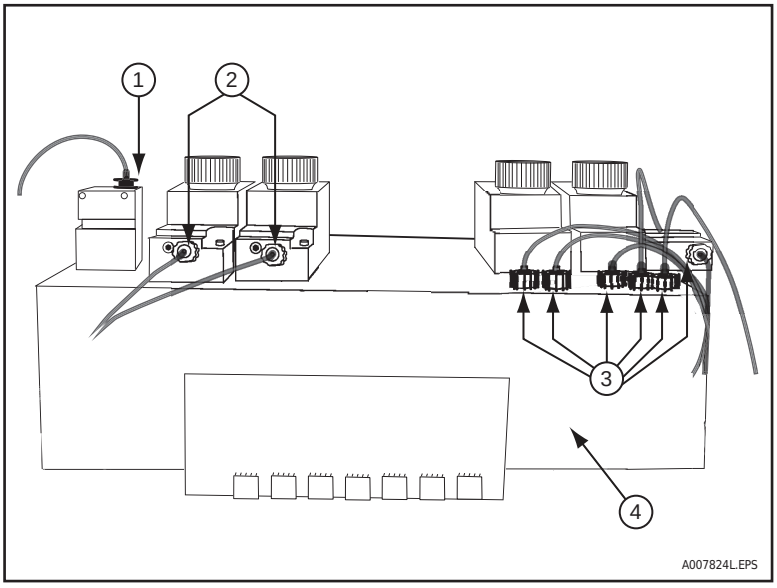

1. Sample pump connection
2. Precision pump connections (2)
3. Wash pump connections (6)
4. Wash buffer reservoir

4 If you find any kinked tubing, deposits, or corrosion, call Beckman Coulter Technical Support for assistance.

Kinked tubing can affect precision. Deposits or corrosion can indicate that a connection or fitting is leaking.

5 Record all maintenance in the Electronic Scheduled Maintenance Log.

6 If you are performing the 10,000 test interval maintenance, perform the Check DxI Upper Aspirate Peri-Pump Fittings procedure next.

7 If you are not continuing with the 10,000 test interval maintenance, close the right main upper cover and Initialize the DxI System.

Verify DxI System Performance.

Check DxI Upper Aspirate Peri-Pump Fittings

Use this procedure to visually inspect the upper aspirate peristaltic pump connections and tubing. The upper aspirate peristaltic pump is located beneath the right main upper cover and to the right of the wash buffer reservoir on the DxI instrument.

⚠ WARNING

Never wear exposed metal that can come into contact with electrical components of the instrument.

This procedure may expose you to potentially infectious materials. Handle and dispose of biohazard materials according to proper laboratory procedures. Use proper hand, eye and facial protection.

The system must be in *Not Ready* mode.

---

1 At the DxI console select **Diagnostics F7**, then select **Device Diagnostics F4** to display the Device Diagnostics screen.

---

2 Open the right main upper cover of the DxI.

---

3 Visually inspect the following locations for kinked tubing, and for crystalline deposits or corrosion at the tubing connections and fittings.

- Pump channels (three on either side of the pump)
- Pump manifold

NOTE DxI systems are configured with one of the perstaltic pump configurations shown in Figure 12.81. This procedure is appropriate for use with either configuration.

Figure 12.81 Upper Aspirate Peristaltic Pump

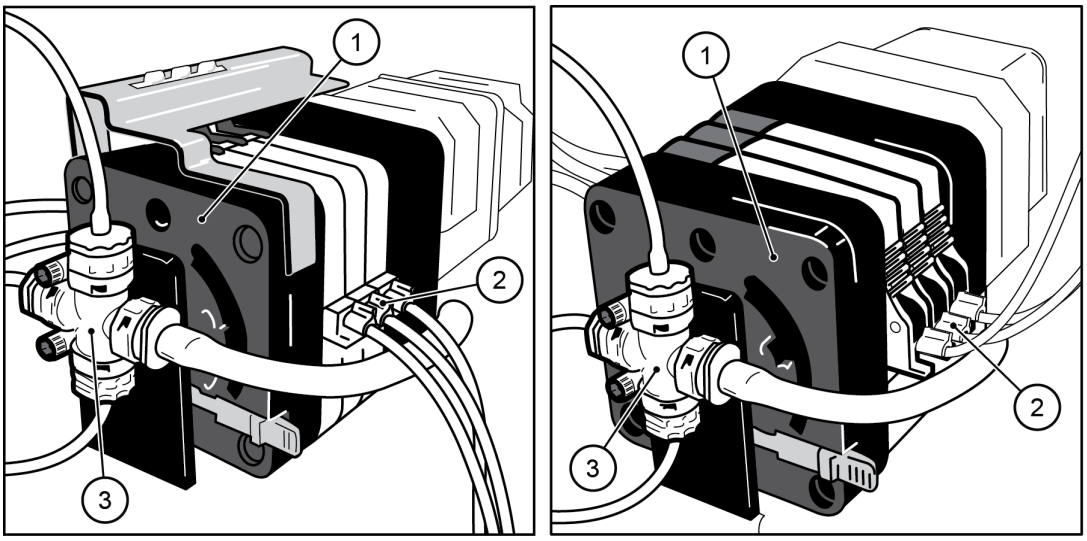

1. Upper aspirate peristaltic pump
2. Pump channels
3. Pump manifold

4 If you find any kinked tubing, deposits, or corrosion, call Beckman Coulter Technical Support for assistance.

Kinked tubing can affect system performance. Deposits or corrosion can indicate that a connection or fitting is leaking.

5 Record all maintenance in the Electronic Scheduled Maintenance Log.

6 If you are performing the 10,000 test interval maintenance, perform the Check DxI Reagent Pipettors and Clean Wash Towers procedure next.

7 If you are not continuing with the 10,000 test interval maintenance, close the right main upper cover, Initialize the DxI System and Verify DxI System Performance.

Check DxI Reagent Pipettors and Clean Wash Towers

Perform this procedure at the DxI console and instrument. Use this procedure to inspect and clean the reagent pipettors and wash towers. The pipettors and towers are located beneath the left upper main cover of the DxI. It is not necessary to inspect or clean the sample pipettor.

⚠ WARNING

Never wear exposed metal that can come into contact with electrical components of the instrument.

This procedure may expose you to potentially infectious materials. Handle and dispose of biohazard materials according to proper laboratory procedures. Use proper hand, eye and facial protection.

The system must be in *Not Ready* mode.

1. At the DxI console select **Diagnostics F7**, then select **Device Diagnostics F4** to display the Device Diagnostics screen.

2. Open the right main upper cover of the DxI.

3. Locate the reagent pipettors. For the DxI 800, refer to Figure 12.82, [1]. For the DxI 600, refer to Figure 12.83, [1]. The reagent pipettors are mounted on separate pipettor assemblies.

Figure 12.82 DxI 800 Interior

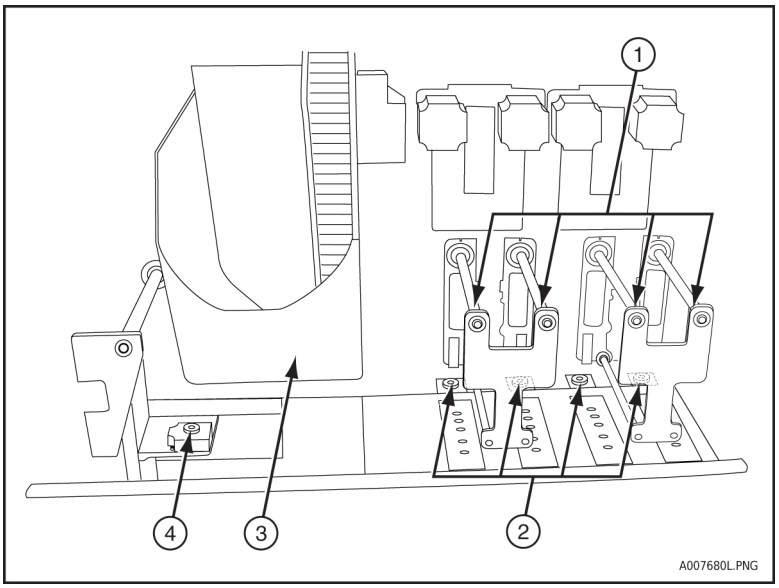

1. Reagent pipettor assemblies (4)
2. Reagent pipettor wash towers (4)
3. Vessel hopper
4. Sample pipettor wash tower

Figure 12.83 DxI 600 Interior

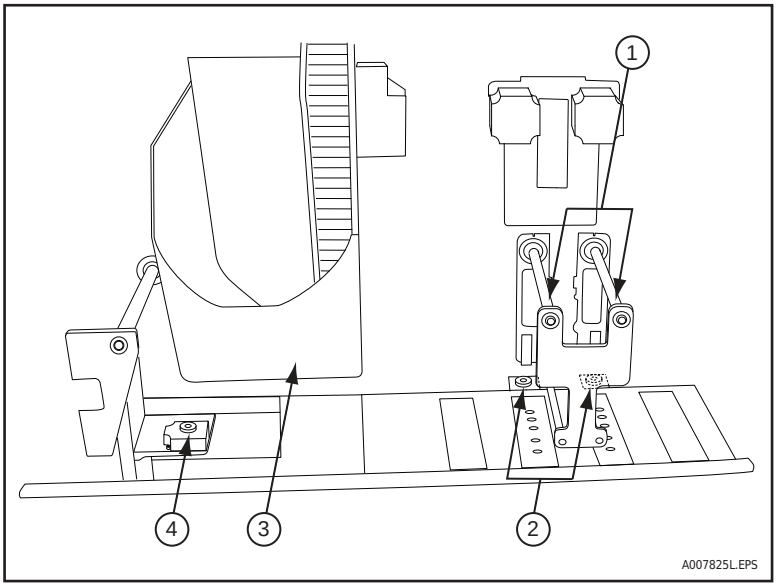

1. Reagent pipettor assemblies (2)
2. Reagent pipettor wash towers (2)
3. Vessel hopper
4. Sample pipettor wash tower

4 Visually inspect the reagent pipettor fluidic lines for kinked tubing and for crystalline deposits or corrosion at the tubing connections. Inspect the tubing near the top of the pipettor for leaks.

5 If you find any kinked tubing, deposits, corrosion, or leaks, call Beckman Coulter Technical Support for assistance.

Kinked tubing can affect precision. Deposits or corrosion can indicate that a connection or fitting is leaking.

6 Locate the wash towers. For the DxI 800, refer to Figure 12.82, [2]. For the DxI 600, refer to Figure 12.83, [2]. The reagent pipettor wash towers are underneath the reagent pipettors on the lower right side. The sample pipettor wash tower is underneath the sample pipettor on the lower left side of the instrument.

7 Check the wash tower overflow reservoirs for liquid or excessive crystalline deposits.

Figure 12.84 Wash Tower Overflow Reservoir

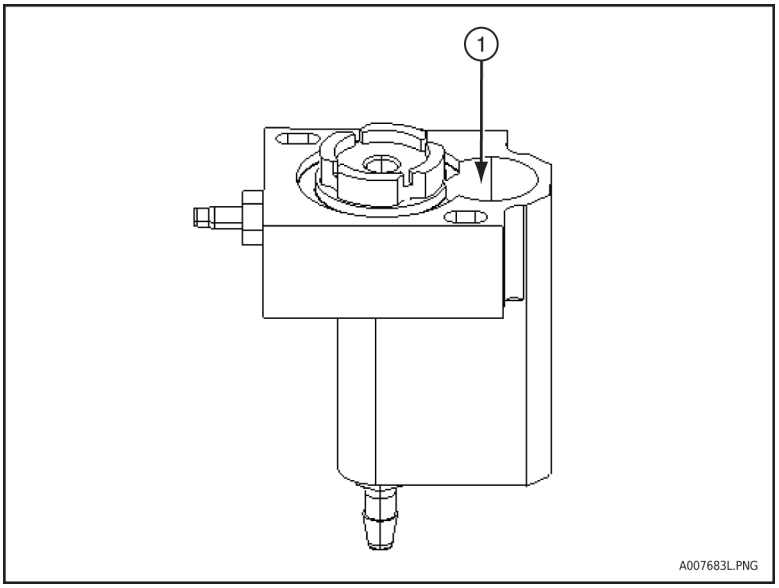

1. Wash tower overflow reservoir

8 If you find liquid or excessive crystalline deposits in one or more reservoirs, call Beckman Coulter Technical Support for assistance.

Liquid or excessive deposits can indicate that a connection or fitting is leaking, or that a pipettor is aligned incorrectly.

9 Wet a lint-free swab (or equivalent fiber-free applicator) with deionized water and wipe any deposits from the reservoirs and exterior of the wash towers.

10 Record all maintenance in the Electronic Scheduled Maintenance Log.

11 If you are performing the 10,000 test interval maintenance, perform the Check DxI for Fallen RVs procedure next.

12 If you are not continuing with the 10,000 test interval maintenance, close the right main upper cover and Initialize the DxI System.

Verify DxI System Performance.

Check DxI for Fallen RVs

Use this procedure to visually inspect for RVs that have fallen and are loose inside the DxI instrument.

WARNING

Never wear exposed metal that can come into contact with electrical components of the instrument.

This procedure may expose you to potentially infectious materials. Handle and dispose of biohazard materials according to proper laboratory procedures. Use proper hand, eye and facial protection.

The system must be in *Not Ready* mode.

1. At the DxI console select **Diagnostics F7**, then select **Device Diagnostics F4** to display the Device Diagnostics screen.

2. Open the right main upper cover of the DxI.

WARNING

- **The carriages contain many mechanical parts that could puncture the skin. Wear proper hand, eye, and facial protection. Always be careful when reaching for an RV.**
- **Be careful not to touch the circuit board beneath the vessel hopper when you reach for an RV. You can disturb important electronic connections if you brush against the board.**

3. Visually inspect for fallen RVs beneath the vessel hopper. For the DxI 800, refer to Figure 12.85, [3]. For the DxI 600, refer to Figure 12.86, [3]. Also inspect around the reagent pipettor and sample pipettor carriages, being sure to look around the belts for RVs.

Figure 12.85 DxI 800 Interior

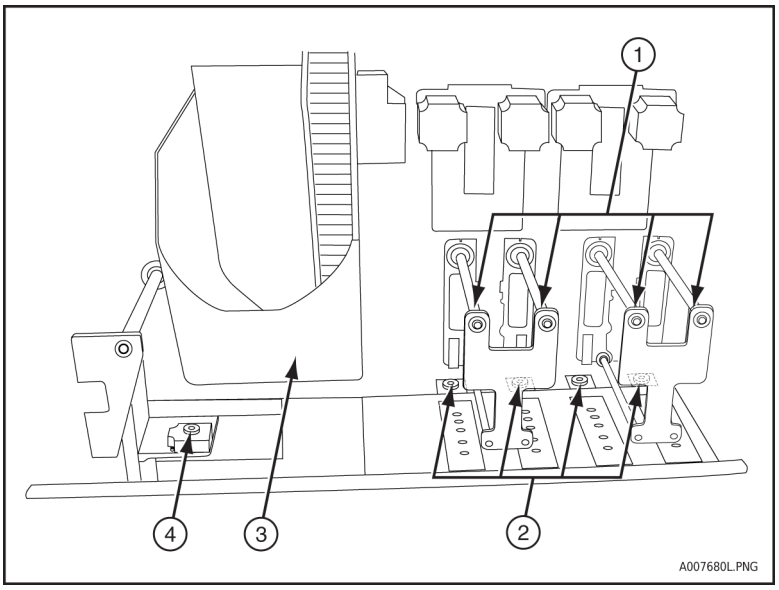

1. Reagent pipettor assemblies (4)
2. Reagent pipettor wash towers (4)
3. Vessel hopper
4. Sample pipettor wash tower

Figure 12.86 DxI 600 Interior

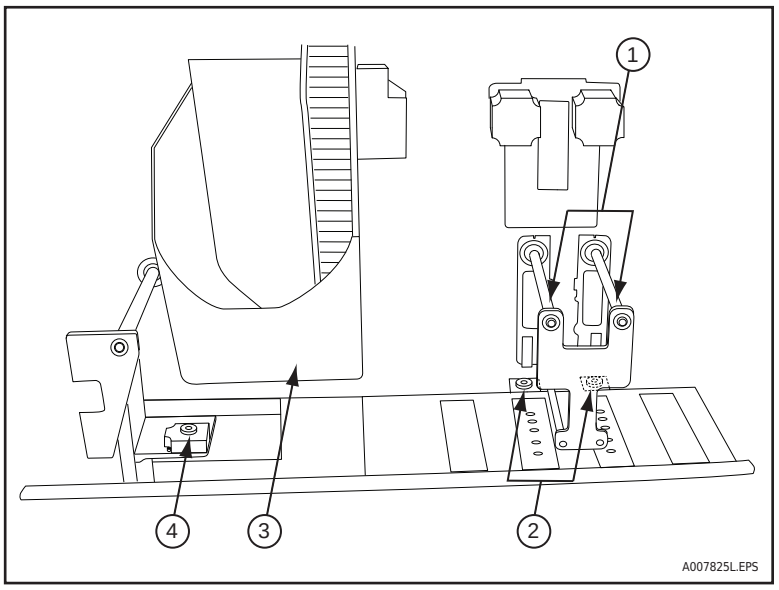

1. Reagent pipettor assemblies (2)
2. Reagent pipettor wash towers (2)
3. Vessel hopper
4. Sample pipettor wash tower

4 If you find any fallen RVs, carefully remove them from the instrument and dispose of them with your biohazard waste.

5 If you cannot remove an RV that is contributing to a system problem, call Beckman Coulter Technical Support for assistance.

6 Close both main upper covers and Initialize the DxI System.

7 Exit the Device Diagnostics screen and select **Yes F1** to home the devices.

8 Record all maintenance in the Electronic Scheduled Maintenance Log.

9 If you are performing the 10,000 test interval maintenance, perform the Check DxI Liquid Waste Drawer procedure as the system is initializing.

Check DxI Liquid Waste Drawer

NOTE This procedure is necessary only if the system is not plumbed to the floor drain.

Use this procedure to visually inspect the DxI liquid waste drawer for leaks. The liquid waste drawer is located on the lower left as you face the DxI instrument.

WARNING

This procedure may expose you to potentially infectious materials. Handle and dispose of biohazard materials according to proper laboratory procedures. Use proper hand, eye, and facial protection.

The system may be in any mode.

1 Pull out the liquid waste drawer.

Figure 12.87 Bulk Liquid Waste Container

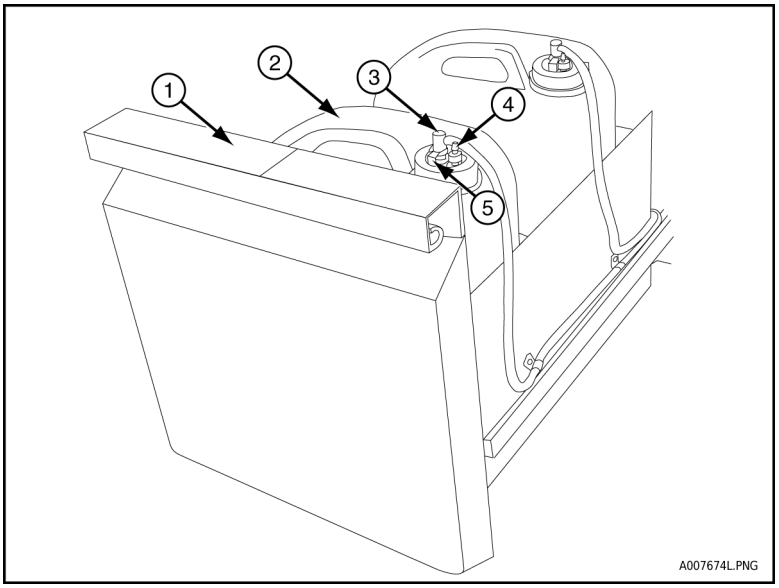

1. Liquid waste drawer
2. Bulk liquid waste container
3. Cap fitting and tubing
4. Vent
5. Disconnect button

2 Check for any liquid outside of the bulk liquid waste containers, either pooled on top of one or both of the bulk liquid waste containers, or at the bottom of the liquid waste drawer.

Liquid waste can indicate that there is a leak in the fluidic drawer located above the liquid waste drawer.

3 If there is any liquid outside of the bulk liquid waste containers, handle and decontaminate the waste according to proper laboratory procedures. Then call Beckman Coulter Technical Support.

4 Check the connections at the back of the drawer for crystalline deposits or corrosion at the tubing connections. If you find any deposits or corrosion, call Beckman Coulter Technical Support.

Deposits or corrosion can indicate that a connection or fitting is leaking.

5 Close the liquid waste drawer.

6 Record all maintenance in the Electronic Scheduled Maintenance Log.

7 If you are performing the 10,000 test interval maintenance, perform the Check DxI Wash Buffer Supply Drawer procedure next.

Check DxI Wash Buffer Supply Drawer

Use this procedure to visually inspect the wash buffer supply drawer. The wash buffer supply drawer is located on the lower right as you face the DxI.

The system may be in any mode.

1 Pull out the wash buffer supply drawer.

Figure 12.88 Wash Buffer Supply Drawer

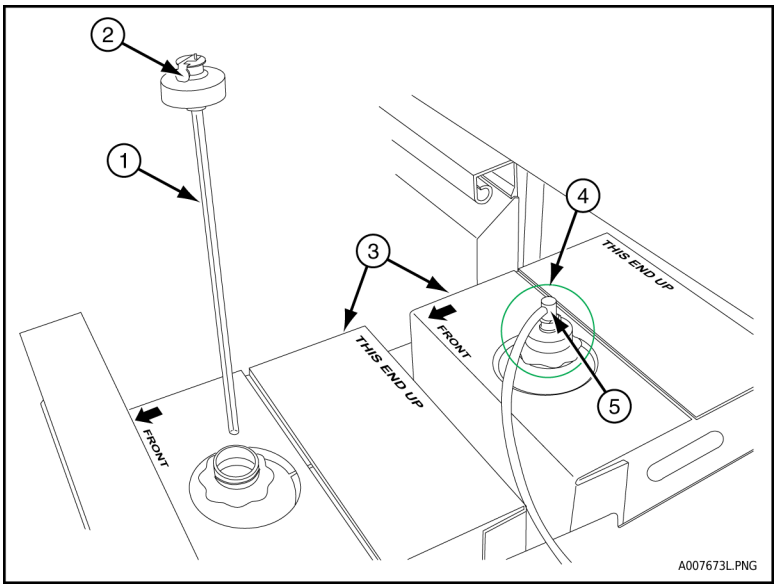

1. Draw tube
2. Disconnect button
3. Bulk wash buffer containers
4. Cap/draw tube assembly
5. Cap fitting and tubing

2 Check the condition of both bulk wash buffer containers. Be sure the containers are in good condition and are not beginning to collapse. If one or both containers are collapsing, contact Beckman Coulter Technical Support.

A collapsing container can indicate that the wash buffer cap filter is clogged and is creating a vacuum.

3 Check for any wash buffer outside of the bulk wash buffer containers, either pooled on top of one or both of the containers, or at the bottom of the wash buffer supply drawer.

The presence of wash buffer can indicate that there is a leak in the tubing, or that the cap/draw tube assembly is loose or incorrectly connected.

- If you find a leak in the wash buffer tubing, call Beckman Coulter Technical Support.
- If the cap/draw tube assembly is loose, reconnect the assembly.

4 Check the tubing and connections at the back of the drawer for kinks, or crystalline deposits and corrosion at the tubing connections. If you find any kinks, deposits or corrosion, call Beckman Coulter Technical Support.

Deposits or corrosion can indicate that a connection or fitting is leaking.

5 Close the wash buffer supply drawer.

6 Record all maintenance in the Electronic Scheduled Maintenance Log.

7 If you are performing the 10,000 test interval maintenance, perform the Clean DxI Air Filter procedure next.

Clean DxI Air Filter

Use this procedure to clean the DxI air filter. The air filter is located behind the lower right door as you face the DxI.

⚠ WARNING

Use extreme caution when you handle the air filter. The filter edges are sharp and can puncture the skin.

⚠ CAUTION

Do not operate the DxI if the air filter is not in place. Running without the air filter may result in dust buildup on critical instrument components.

Materials Required:

- Hand-held vacuum device

The system may be in *Ready* or *Not Ready* mode.

1 Place your finger in the indentation between the wash buffer supply drawer and the lower right door. Open the lower right door by swinging it outward.

2 Locate the air filter near the bottom of the cabinet.

Figure 12.89 Air Filter Location

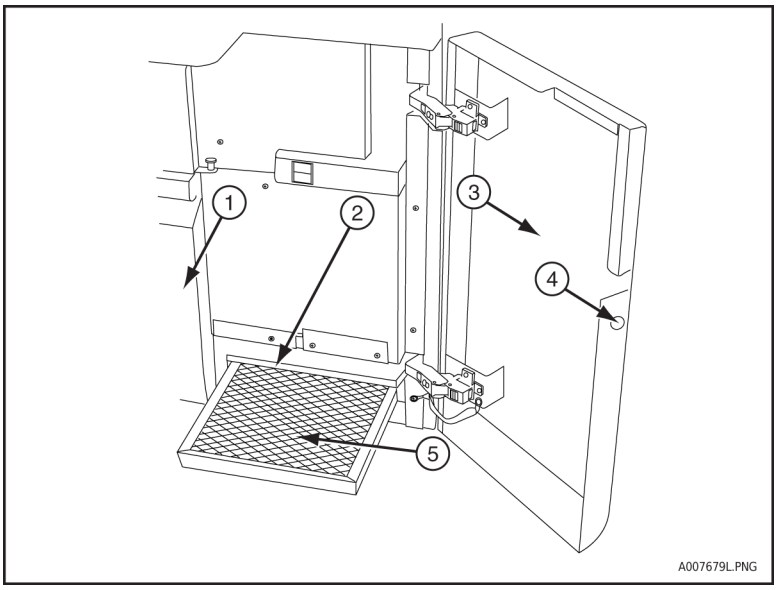

1. Wash buffer supply drawer
2. Filter housing
3. Lower right door (open)
4. Indentation in the lower right door
5. Air filter (screen cage facing up)

3 Grasp the filter by its metal frame and slide the filter out of the filter housing.

4 Turn the filter over so the screen cage faces the floor, and then lay the filter down on a solid surface.

5 Vacuum the filter until most of the dust and dirt is removed.

6 Turn the filter so the screen cage faces up and slide the filter into the filter housing.

7 Gently close the lower right door.

8 Record all maintenance in the Electronic Scheduled Maintenance Log.

9 If you are performing the 10,000 test interval maintenance, perform Daily Maintenance and Verify DxI System Performance.

As-Needed/As-Required Maintenance

- CC Probes Cleaning (Manual Program)
- Replace the Chloride Electrode Tip
- Replace the Sodium Measuring/Reference Electrode
- Replace the BUNm/UREAm Electrode (DxC 800 Only)
- Replace the CO2 Membrane
- Clean the EIC Port
- Clean the CO2 Alkaline Buffer Lines
- Clean the ISE Drain
- Flush the Flow Cell (Manual)
- Flush the Sample and Reagent Probe
- Replace the Sample and Reagent Probe
- Clean the CC Sample Probe, Reagent Probes and Mixers
- Clean the MC Sample Probe Collar Wash Assembly
- Clean the Precipitate in PHOSm (DxC 800 Only)
- Inspect the Cuvette Washer Probes
- Wash All Cuvettes With System Wash
- Wash the CC Reagent Cuvettes with CCWA
- Clean the Work Surfaces
- Decontaminate the Sample Racks
- Decontaminate the DxC Instrument
- Replace the CTS Wick
- Replace ISE Drain Pump Tube
- Replace the UCTA Pick and Place Head
- Clean the UCTA Left/Right Sample and Wash Syringes
- Flush the UCTA Left/Right Aliquot Probes
- UCTA Accuracy PVT Procedure
- Obstruction Detection and Correction (ODC)
- Clean UCTA Waste Sump Exterior
- ISE Service

Introduction

As-Needed/As-Required Maintenance contains maintenance procedures which may be performed on an as-needed basis or procedures that may be performed on a regular basis as preventive service maintenance.

The As-Required Maintenance includes items that are maintained on an interval schedule, and are normally performed as preventive service maintenance. The As-Required procedures are grouped together with As-Needed Maintenance, categorized by subsystem instead of by interval.

Action Log

The Maintenance Screen includes a free-text Action Log function that allows you to create notes regarding maintenance issues and procedures. To display the Maintenance Action Log screen, select the **Utils** icon, then select **2 Maintenance**, then **Action F1**. Use the Action Log to record any As-Needed or As-Required maintenance you perform.

CC Probes Cleaning (Manual Program)

You can clean the CC sample probe, reagent probes and mixers as part of the Clean Flow Cell, Cups and CC Probes/Mixers (Automated) procedure in this chapter.

You can also clean the CC sample probe, reagent probes, and mixers manually. Regular cleaning prevents sample, reagent, or system and hardware errors. You can reduce erratic chemistry errors such as drift and noise, or chemistry performance issues such as imprecision when you keep a regular cleaning schedule.

NOTE Disable the Serum Index option (see Auto Serum Index/ORDAC) to continue with the cleaning procedure.

Required Materials:

- Diluted Clenz Solution (PN 664090) freshly prepared. Add 4 drops of Clenz Solution to an empty 2 mL sample cup, fill to 2 mL line with saline (NaCl) (PN A93901). (Do not use buffered or pH adjusted 0.9% NaCl.) Mix.
- 0.9% Saline (NaCl) (PN A93901). (Do not use buffered or pH adjusted 0.9% NaCl.)
- CCWA cartridge (PN 657133)

1 Load CCWA cartridge on the DxC. See Load/Unload Cartridge Chemistries (CC).

2 Program 15 replicates of diluted Clenz Solution and 10 replicates of saline as shown in the following steps.

Rack	Sample Position	Chemistry	Replicates	Fluid
1	1	CCWA	15	Diluted Clenz Solution
	2	CCWA	10	Saline

3 Select **Samples** from the menu bar.

- Type a rack number and press (Enter).
- Type a position number and press (Enter).
- Type a sample ID (optional).

4 Select CCWA.

5 Select **Options F3**.

6 Type the desired number of **Sample Replicates** (refer to the table in Step 2) and select **OK**.

7 Select **Next F10** to program the next position.

8 Repeat Steps 3-7 for the second cup.

9 Place cups containing diluted Clenz Solution and saline into the correct rack and positions.

10 Load the sample rack onto the UCTA load tray, and press **RUN**.

NOTE Ignore the results for these samples.
If you disabled the Serum Index option, enable it.

Replace the Chloride Electrode Tip

Materials Required:

- Chloride electrode tip

⚠ CAUTION

To prevent damage due to electrical static discharge (ESD), wear the wrist ground strap when you perform this procedure. For further instructions, refer to Basic Laboratory Practice in the beginning of this chapter.

---

1 Unpack a new chloride electrode tip (PN A10867). Carefully remove the protective cap from membrane end of tip assembly.

---

2 Loosen the Phillips screws on the ISE module cover and remove the cover.

NOTE There are two screws on the DxC 800 and three screws on the DxC 600.

---

3 Release the locking pin on the ISE module and lift the module until it clicks into a raised, locked position.

---

4 Prevent leakage of reagent from the flow cell.

- Select:
  - **Utils** from the menu bar
  - **2 Maintenance**
  - **3 ISE Service**
  - **1 Electrode Maintenance/Drain**
  - **Continue.**

---

5 Loosen the flow cell retaining screw (1) located at the top of the flow cell. This is a captive screw and cannot be removed from the flow cell. Pull assembly forward and upward to remove.

IMPORTANT Do not disconnect any of the reagent lines attached to the flow cell.

Figure 12.90 ISE Flow Cell

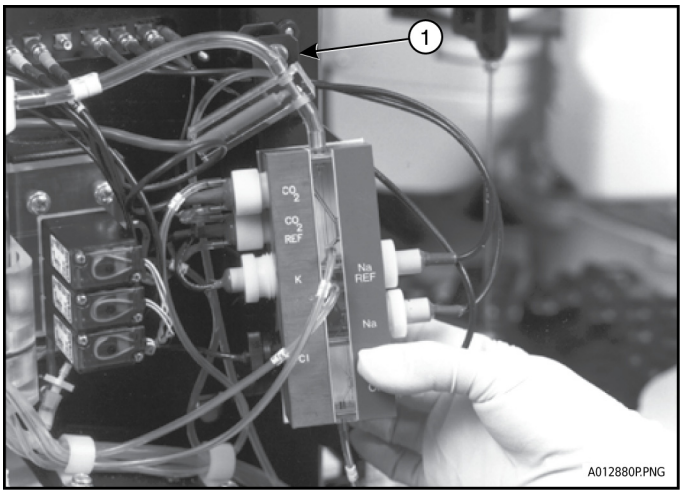

1. Retaining Screw

6 Locate the chloride electrode (1). Remove electrode by turning the electrode retaining nut.

Figure 12.91 ISE Flow Cell

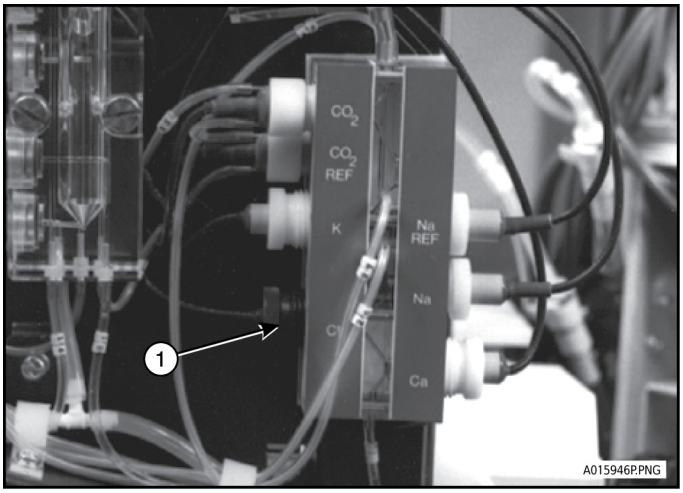

1. Chloride Electrode

7 Remove the quad-ring (1) from the tip of the electrode. Inspect the electrode port if the quad-ring is not on the electrode.

Figure 12.92

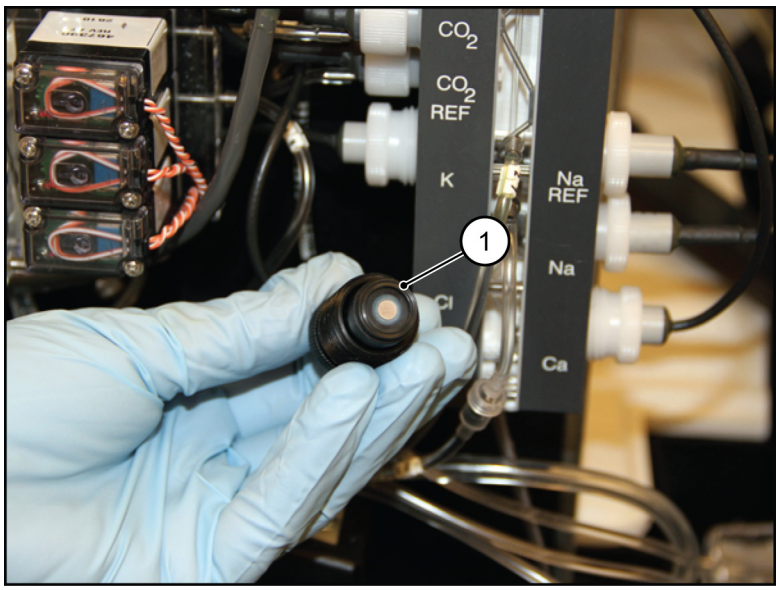

8 Unscrew the old tip from the electrode assembly. Discard the O-ring and the old electrode tip.

9 Install a new O-ring onto chloride electrode body and screw the chloride electrode tip onto electrode body.

10 Completely dry the electrode port with lint-free tissue.

IMPORTANT Do not scratch the electrode port.

11 Install a new quad-ring on the electrode.

12 Insert the electrode into electrode port. Turn electrode retainer nut until finger-tight.

13 Gently pull on electrode body to test for proper seating of electrode. The electrode assembly should not move. If electrode moves, remove it and install it again. Check for an extra or missing quad-ring if installation is difficult.

14 Reposition flow cell on the mounting panel and tighten the one retaining screw.

15 Select **OK** in the Maintenance pop-up confirmation window when the electrode service has been completed and the electrode has been properly replaced.

IMPORTANT Reagents immediately prime through the flow cell.

While system is priming, observe flow cell for leaks. If you notice any leaks, correct the problem when priming is complete.

16 When the system has completed priming, select **Close** to exit the procedure.

⚠ CAUTION

Pinch hazard. Keep fingers clear of the ISE module as you lower it.

17 Lower the ISE module by releasing the locking pin. Be careful not to pinch tubing as the ISE module is lowered.

18 Reinstall the ISE module cover.

19 Fasten the Phillips screws on the ISE module cover to insure the cover is firmly seated.

NOTE There are two screws on the DxC 800 and three screws on the DxC 600.

20 Calibrate all ISE chemistries. A reference drift for new electrodes may be observed during the first 4-6 hours after electrode replacement. Results will **NOT** be compromised. Recalibrating the chemistry during this time period helps stabilize the electrode.

Replace the Sodium Measuring/Reference Electrode

The sodium measuring electrode must be prepared before installation of a new electrode.

Materials Required:

- Clean Container
- Na/K-free filter paper
- Phillips screwdriver
- Sodium electrode

Follow the steps below to prepare the Sodium electrode (PN 668295).

1 In a small clean container, prepare a soft bottom lining using crumpled multiple layers of Na/K-free filter paper (2).

Pour ISE Reference solution (do not dilute) into the container to a depth not to exceed two inches (50 mm) (1).

Figure 12.93 ISE Reference Solution

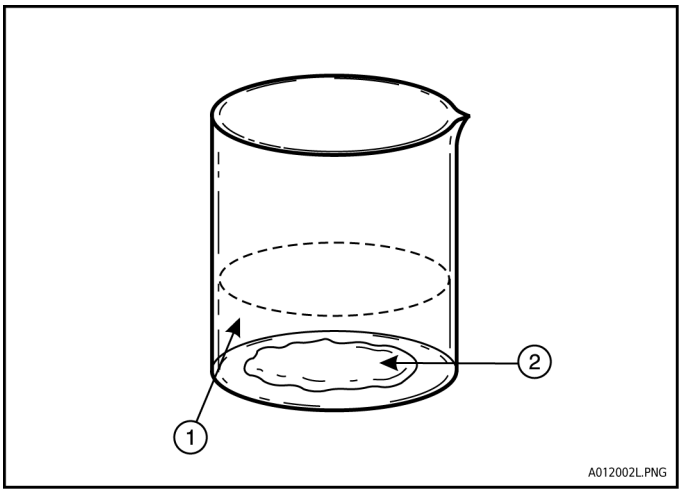

1. ISE Reference solution **2.** Na/K-free filter paper

2 Unpack a new sodium electrode. Carefully remove black protective cap covering glass tip.

IMPORTANT If maximum soaking time is not allowed, the new electrode may require a few hours of operation to achieve complete electrical stability. During this period, more frequent calibration than normal may be required in response to system error messages. Assay results are not compromised during this time.

3 Soak the electrode:

- 1 hour minimum
- 24 hours maximum

4 Lower the electrode face (2) into the soaking solution until only the tip is covered by the soaking solution (1).

Figure 12.94 Sodium Electrode

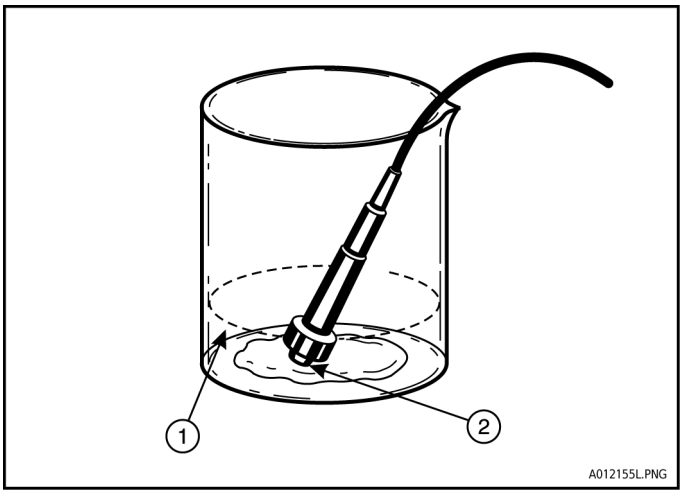

1. ISE Reference solution
2. Electrode face

Removal and Installation of the Sodium Electrode

For access to the Sodium electrode, instrument covers must be removed. To remove the ISE module cover, follow the steps below. The instrument status must be *Standby* to perform this procedure.

⚠ CAUTION

To prevent damage due to electrical static discharge (ESD), wear a wrist ground strap when you perform this procedure. For further instructions, refer to Basic Laboratory Practice in the beginning of this chapter.

1 Loosen the two Phillips screws on the ISE Module cover and remove the cover.

2 Release the locking pin on the ISE Module and lift the module until it clicks into a raised, locked position.

3 Drain the flow cell.

Select:

- **Utils** from the menu bar
- **2 Maintenance**
- **3 ISE Service.**
- **1 Electrode Maintenance/Drain**

4 Select **Continue**. This drains the flow cell of reagent so that the electrode may be replaced.

IMPORTANT Do not disconnect any of the reagent lines attached to the flow cell.

5 Disconnect the electrode cable (1).

Figure 12.95 ISE Module

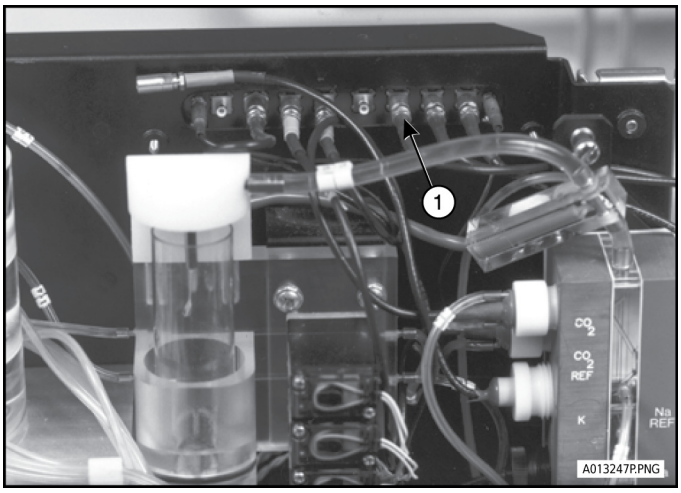

1. Electrode Cable

6 Loosen the flow cell retaining captive screw (1) located at the top of the flow cell. Pull flow cell assembly forward.

Figure 12.96 ISE Module

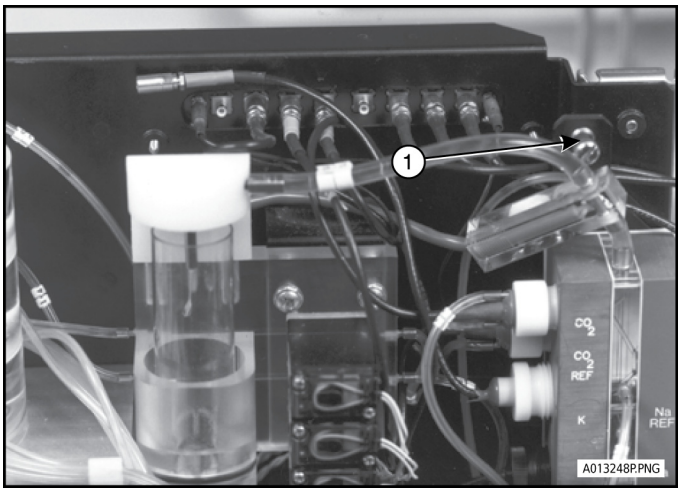

1. Captive Screw

7 Unscrew the electrode retainer nut (1) and withdraw the electrode (2) from the flow cell. Verify that the quad-ring from the removed electrode has not been left in port opening.

Figure 12.97 ISE Flow Cell

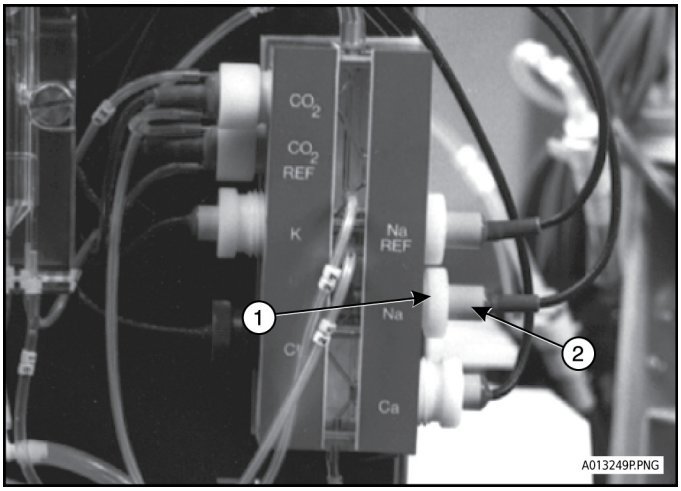

1. Electrode Retainer Nut
2. Electrode

8 Remove the retainer nut from the old electrode and install on new electrode.

9 Examine the electrode tip. If an air bubble is seen inside the tip, hold the electrode cable near the end and spin the electrode for a few seconds. The bubble should be pushed back inside the electrode and remain there away from the tip.

10 Using a lint-free tissue, carefully and thoroughly dry the electrode sides and electrode port.

IMPORTANT Do not touch the electrode tip.

11 Install a new quad-ring (1) on the electrode.

Insert the sodium electrode into the flow cell. Insert retainer nut (2) and turn until finger-tight.

Figure 12.98 Sodium Electrode Assembly

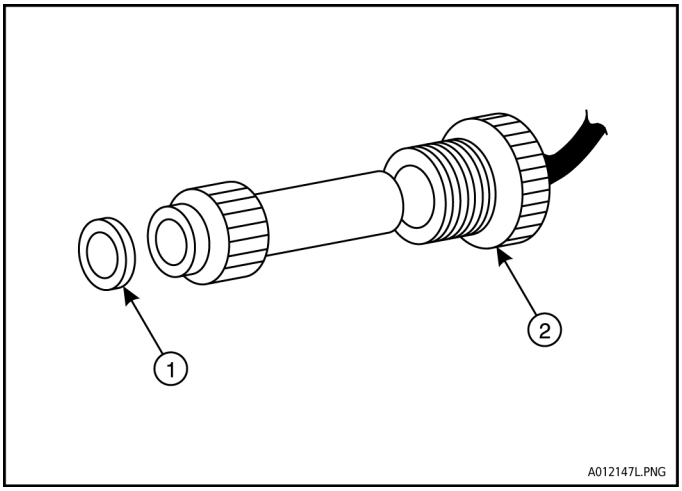

1. Quad-ring
2. Retainer Nut

12 To test for proper seating of electrode, gently pull on electrode body. The electrode assembly should not move. If the electrode moves, remove it and try to install it again. If installation is difficult, check for an extra or missing quad-ring.

13 Reposition the flow cell on mounting panel and tighten the retaining screw.

14 Reconnect the electrode cable to the appropriate connector.

15 Select **OK** in the Maintenance Confirmation window.

16 Select **Close** in the Result Window.

17 Select **Exit F10**.

18 Prime the flow cell:

- Select **Utils** from the menu bar
- Select **1 Prime**
- Select **MC F4**
- Prime **ISE ALL**
- Type **15** in the **Number of primes to repeat** field
- Select **Start Prime**.

IMPORTANT While priming, inspect flow cell for leaks. If you notice any leaks, discontinue priming and correct the problem.

19 Lower the ISE module by releasing the locking pin. Be careful NOT to pinch tubing as the module is lowered.

⚠ CAUTION

Pinch hazard. Keep fingers clear of the ISE module as you lower it.

20 Reinstall the ISE module cover.

21 Calibrate all ISE chemistries.

Replace the BUNm/UREAm Electrode (DxC 800 Only)

1 Drain the reagent from the MC cups.

- Select:
  - **Utils** from the menu bar,
  - **2 Maintenance**,
  - **4 Cup Maintenance**.

2 Select **BUNm/UREAm** to be drained in preparation for BUNm/UREAm electrode replacement.

Select **Drain**. A pop-up confirmation window indicates that the cup is drained and ready for electrode replacement.

3 Loosen the two Phillips screws on the ISE module cover and remove the cover.

4 Loosen the two screws (1) on the MC cover and gently remove the cover.

Figure 12.99

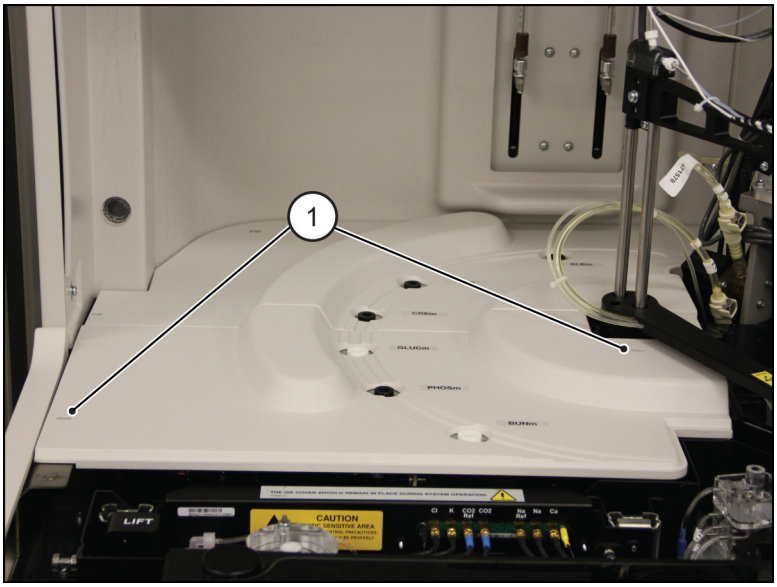

5 Press the latch, which is located on the connector (1), to disengage the electrode pin lead from the connector panel and remove the electrode connector from the socket.

Figure 12.100

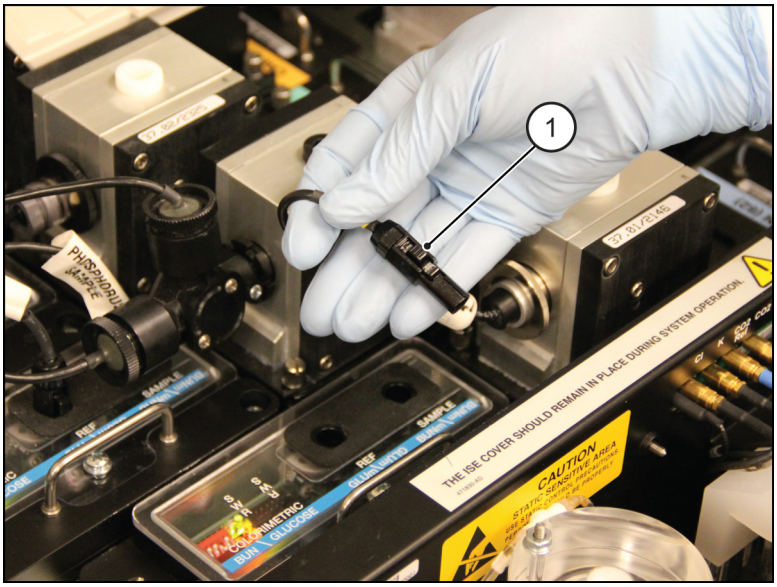

6 Unscrew the BUNm/UREAm electrode retainer nut (1) and withdraw the electrode-retainer assembly from the chemistry reaction cup.

Figure 12.101

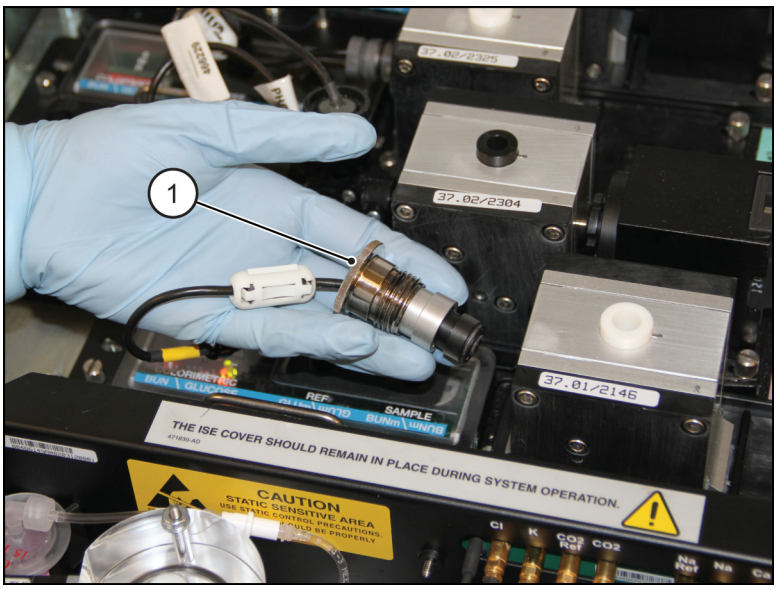

7 Separate the electrode (3), retainer (2) and retainer nut (1).

Figure 12.102

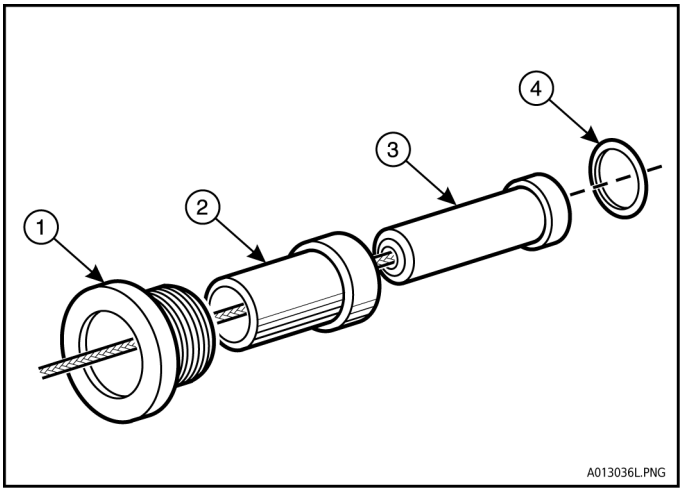

1. Retainer Nut
2. Retainer
3. Electrode
4. Quad-Ring

8 If a ferrite bead (1) is present, unlatch it and remove it from the electrode cable.

Figure 12.103

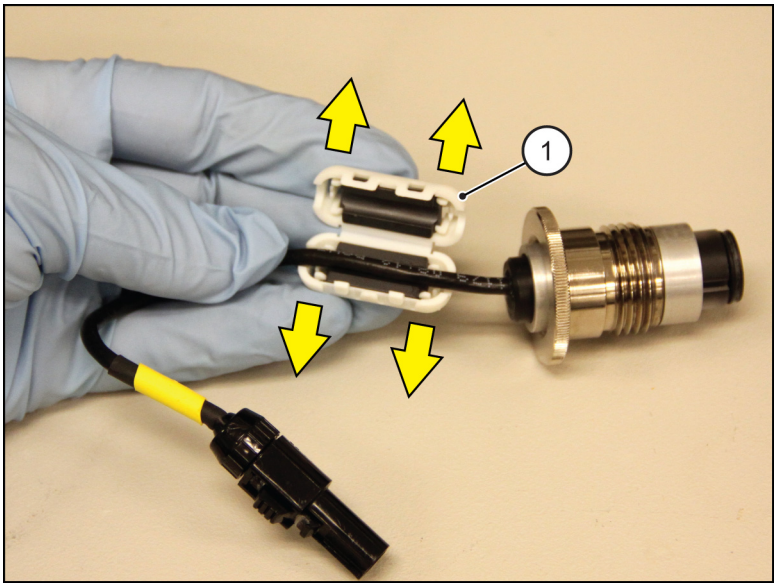

9 Unscrew the connector nut (1) and remove the connector tip (2).

Figure 12.104

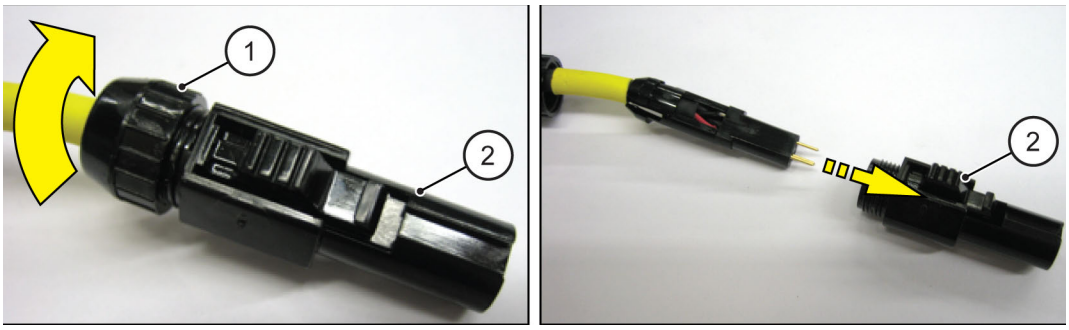

10 Slide the retainer nut (1) and the retainer (2) off of the electrode cable. Save both parts, as they will be needed when you install the new electrode. Discard the old electrode.

Figure 12.105

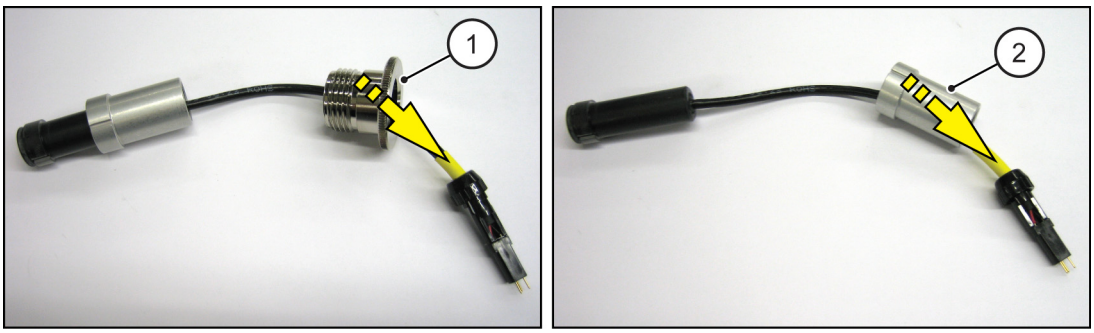

11 To install a **new** BUNm/UREAm electrode (PN 472790), unscrew the connector nut (1) and remove the connector tip (2).

Figure 12.106

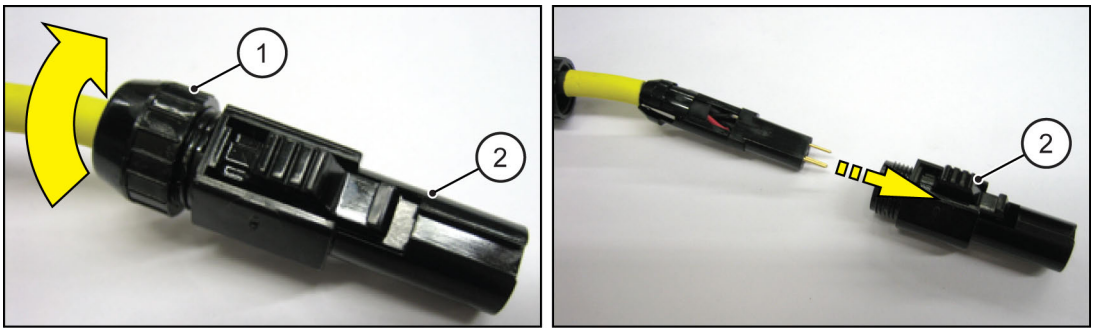

12 Slide the retainer (1) and retainer nut (2) from the old electrode assembly onto the **new** BUNm/UREAm electrode.

⚠ CAUTION

Do not touch the measuring tip of the BUNm/UREAm electrode.

Figure 12.107

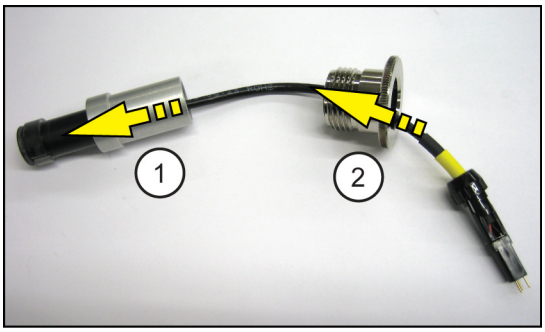

13 To reassemble the connectors, align the open side of the first connector (1) with the flat side of the second connector (2).

Figure 12.108

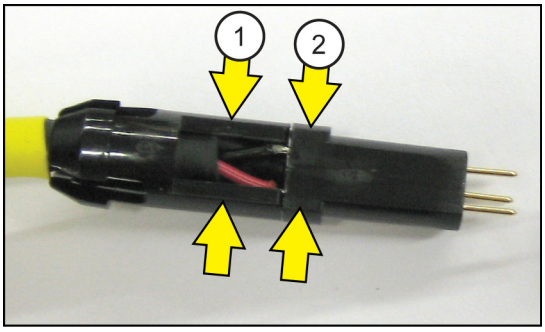

14 Install the connector tip (1) by sliding the latch side of the connector tip completely over the flat side of the two connectors (2). Tighten the connector nut (3) to fasten the connector tip.

Figure 12.109

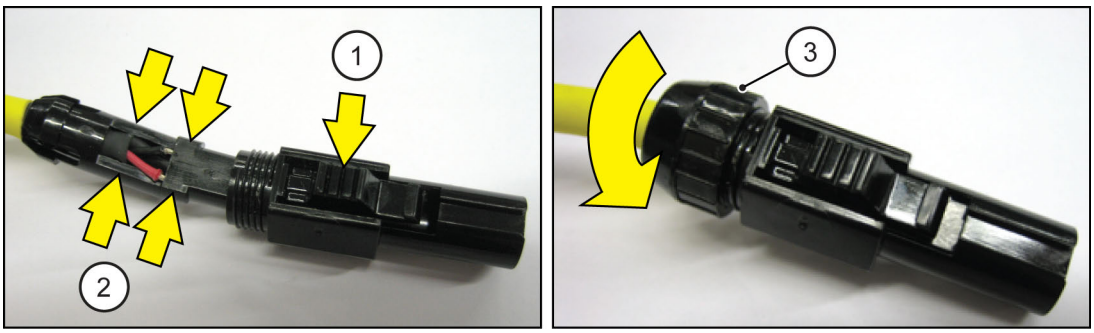

15 Attach the supplied ferrite bead (1) to the sensor cable. Leave approximately 3/4 inch (19 mm) of space between the electrode and the bead.

Figure 12.110

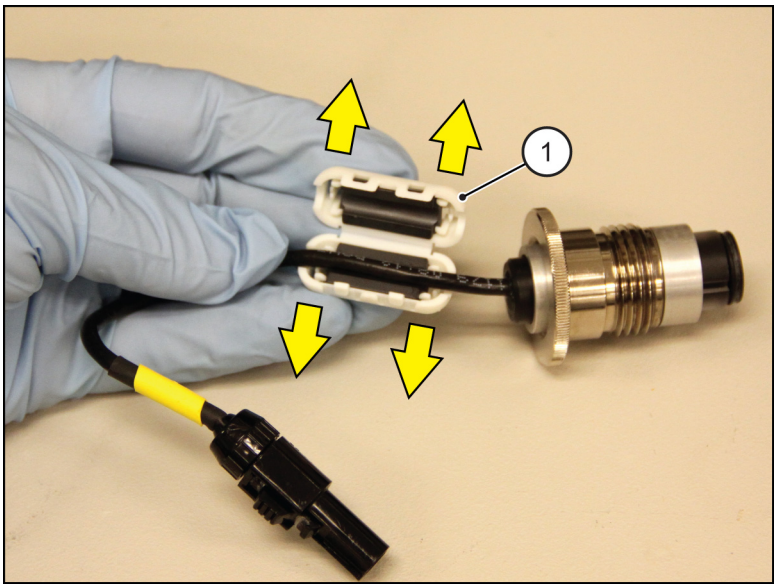

16 Apply a thin coating of Silicone Compound (PN 879049) over the gold tip (1) of the electrode. Carefully wipe the electrode end parallel to the gap with lintless tissue to remove all evidence of the compound. Rub to a bright finish.

IMPORTANT Thoroughly wipe off the electrode surface to remove any residual silicone compound. Excess compound could prevent a successful calibration.

⚠ CAUTION

Do not scratch the gold tip of the BUNm/UREAm electrode as excessive scratches may adversely affect performance.

Figure 12.111

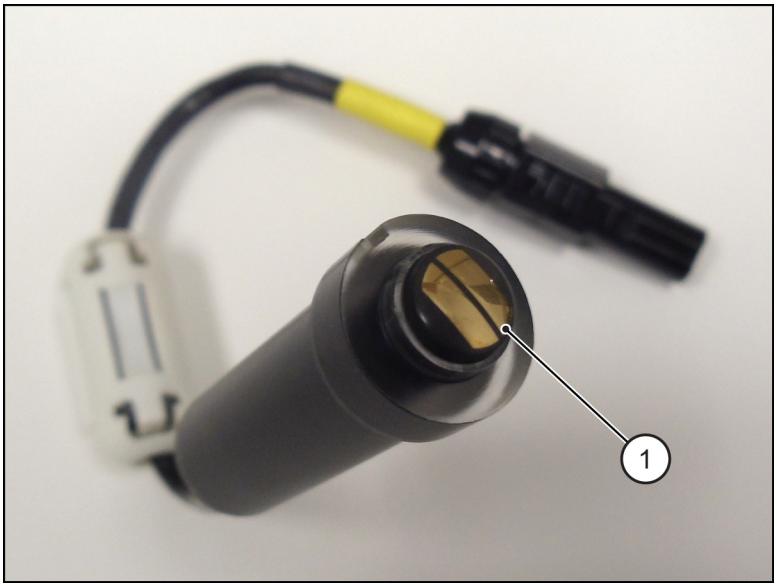

17 Using lintless tissue saturated with deionized water; clean the electrode mounting port.

18 Using dry, lintless tissue, wipe the electrode mounting port.

19 Rinse the new quad-ring (4) in deionized water. Refer to Figure 12.102. Dry with a lintless tissue.

20 Install the new quad-ring on the face of the electrode.

21 To install the electrode on the instrument, rotate the electrode until the electrode key enters the retainer keyway and reinstall the retainer nut on the electrode-retainer assembly. Align the keyway on the body of the retainer containing the electrode with the key in the electrode port and install electrode assembly. Finger-tighten retainer nut.

22 Reconnect the pin lead into the connector panel by aligning the latch on the connector with the notch on connector panel. Push the pin lead into the connector panel until the latch clicks. Refer to Figure 12.100

23 Select **OK** in the Maintenance Confirmation Window. The BUNm/UREAm cup is primed with water.

24 Select **Close** when priming has completed to exit the **Result Window**.

25 Select **Prime5,** to prime BUNm/UREAm 5 times with reagent. While the module is priming:

- Observe the reagent line and reaction cup to confirm there are no leaks.
  - If any leaks are noticed correct the problem.
- Observe the stir bar to verify that it is rotating properly.
  - Select **Close** when priming is complete.

26 Select **Drain**. When draining is complete, select **OK**.

27 When complete, select **Close** to exit the **Result Window** and select **Cancel** to return to the Maintenance menu.

- To ensure there are no bubbles in the BUNm/UREAm cup, immediately prior to calibrating, wrap the tip of an applicator stick with lintless tissue. Insert the end of the stick into the bottom of the cup and carefully swab the electrode.
- Reinstall the covers, making sure that they are seated properly and lie flat.
- Wait 15 – 20 minutes to allow for thermal equilibration. Calibrate BUNm/UREAm.

Replace the CO_2 Membrane

The permeability of the CO_2 membrane may change depending on usage and time. Changes in the membrane could be caused by a coating build-up, wear, or general deterioration. Replace the CO_2 membrane as needed whenever these conditions occur.

⚠ CAUTION

To prevent damage due to electrical static discharge (ESD), wear the wrist ground strap when you perform this procedure. For further instructions, refer to Basic Laboratory Practice in the beginning of this chapter.

Materials Required:

- CO_2 membrane
- Hemostats
- Phillips screwdriver
- Lint-free tissues
- Deionized water
- Tweezers

Remove the Old CO_2 Membrane

1. Loosen the two Phillips screws on the ISE module cover and remove the cover.

2. Release the locking pin on the ISE module and lift the module until it clicks into a raised, locked position.

3. Prepare for ISE maintenance.
   - Select:
     - **Utils** from the menu bar
     - **2 Maintenance**
     - **3 ISE Service**
     - **1 Electrode Maintenance/Drain**
     - **Continue.**

4 Disconnect the CO_2 Measuring Electrode cable (1).

Figure 12.112 ISE Module

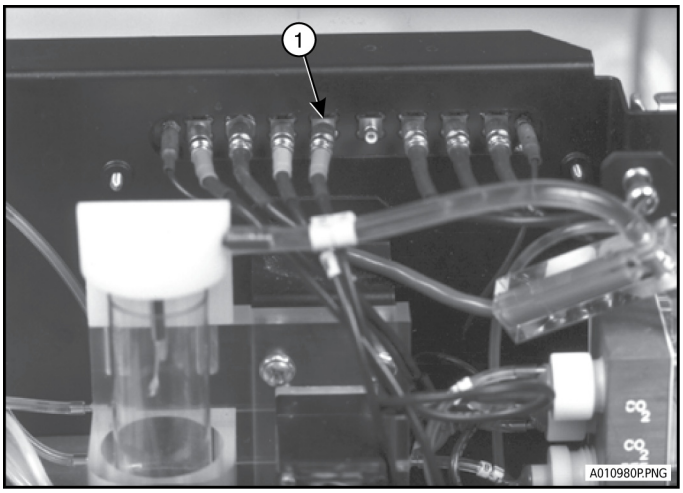

1. CO_2 Measuring Electrode cable

5 Locate the CO_2 measuring electrode. Place lint-free tissue beneath the CO_2 electrode port. Using hemostats or clamps, clamp off reagent Lines #33 (1) and #32 (2) as closely as possible to the CO_2 electrode. (Line #32 connects as a loop to the CO_2 reference electrode.) Remove electrode by turning the electrode retainer nut.

Figure 12.113 ISE Module

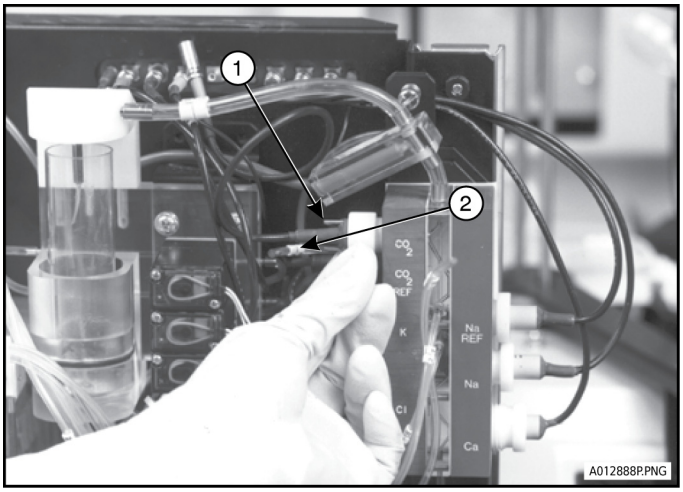

1. Reagent Line #33
2. Reagent Line #32

6 Remove electrode retainer nut (1). Remove membrane as follows:

- Separate the membrane retainer (3) assembly from the electrode.
- Remove the quad-ring (4) from the retainer. Inspect the electrode port if the quad-ring is not on the electrode.
- Separate the membrane retainer from the membrane clamp (2) and pull apart. Discard the used membrane.

Figure 12.114 CO_2 Electrode Assembly

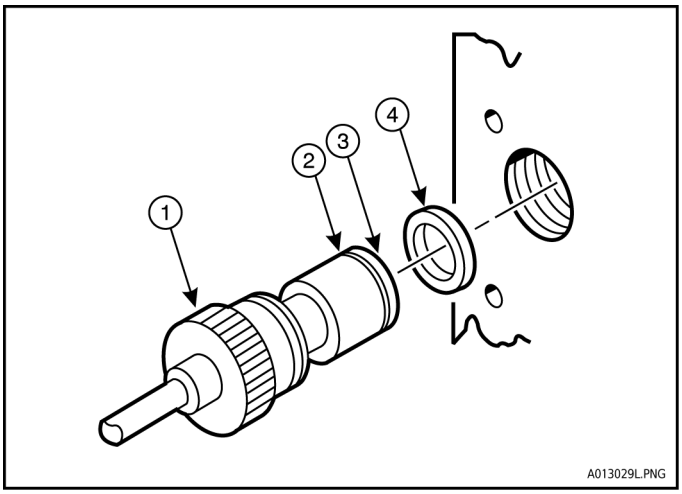

1. Electrode Retainer Nut
2. Membrane Clamp
3. Membrane Retainer
4. Quad-ring

7 Examine the electrode tip. If an air bubble is seen inside the tip, hold the electrode cable near the end and spin the electrode for a few seconds. The bubble should be pushed back inside the electrode and remain there, away from the tip.

Prepare the New CO_2 Measuring Electrode Membrane

1 Use tweezers to remove a new membrane (PN 661750) from the package in the Maintenance Kit. Rinse the membrane thoroughly, on both sides, with deionized water. Gently dry the membrane with lint-free tissue.

Use the packaged membranes that are separated by pink spacers.

Figure 12.115 CO_2 Electrode Membrane

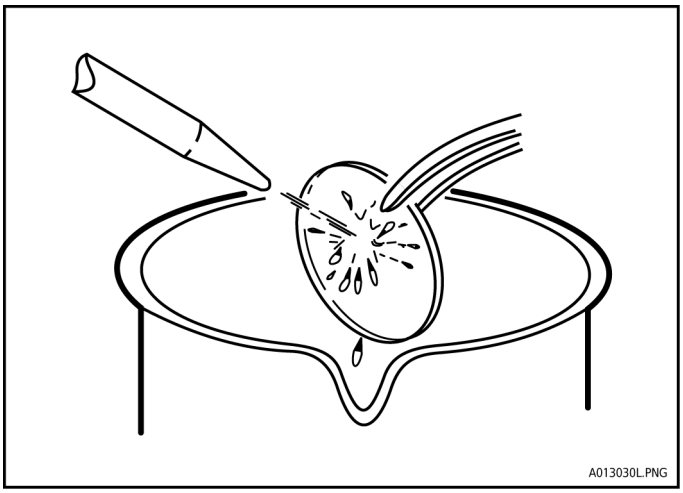

2 Place the membrane clamp (2) on a flat surface. Using tweezers, carefully center the membrane (1) on top of the membrane clamp.

Figure 12.116 CO_2 Electrode Membrane

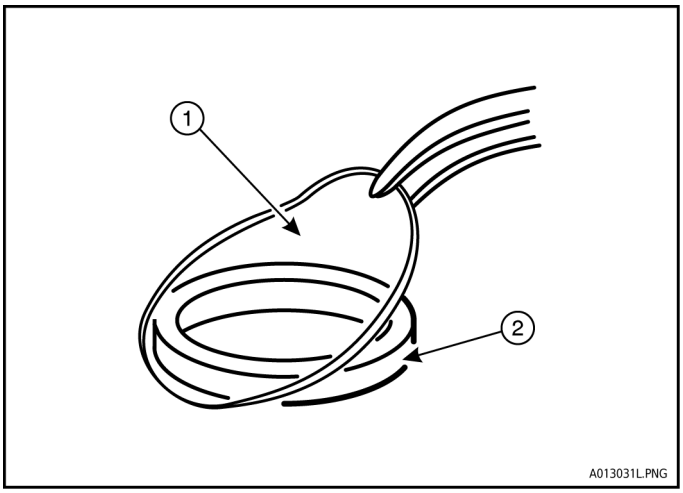

1. Membrane **2.** Membrane Clamp

3 Center the membrane retainer (1) over the membrane clamp (3). Press the membrane retainer into the clamp, thus securing the membrane (2).

Figure 12.117 Membrane Retainer and Clamp

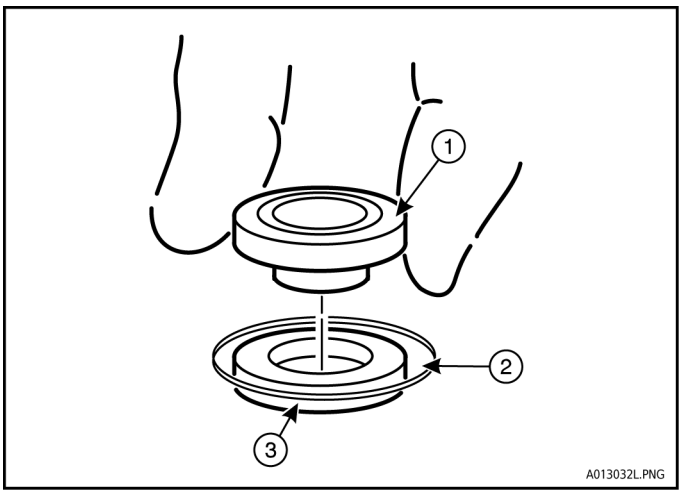

1. Membrane Retainer
2. Membrane
3. Membrane Clamp

4 Place the retainer assembly upside down on the work surface so the clamp is on top and retainer on the bottom. Grasp the electrode carefully and press it firmly against the membrane and into the membrane clamp.

Figure 12.118 CO_2 Electrode

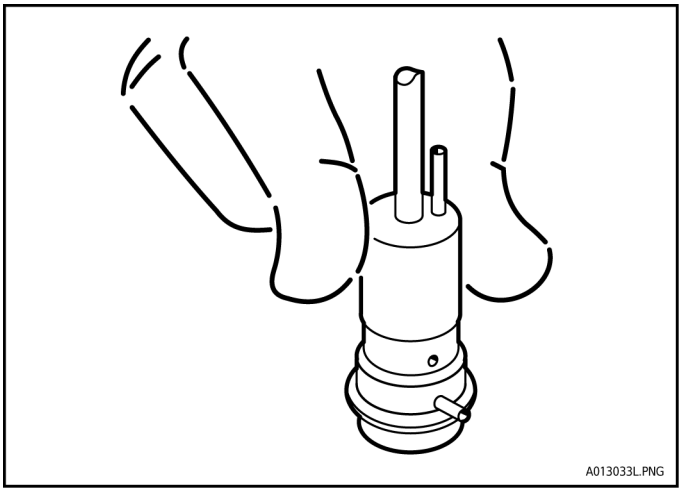

5 Inspect the membrane to verify that it is not broken, or wrinkled and is centered properly with no uneven edges protruding. If membrane is not centered correctly or is damaged, repeat Steps 1-4 with a new membrane.

Figure 12.119 CO_2 Electrode

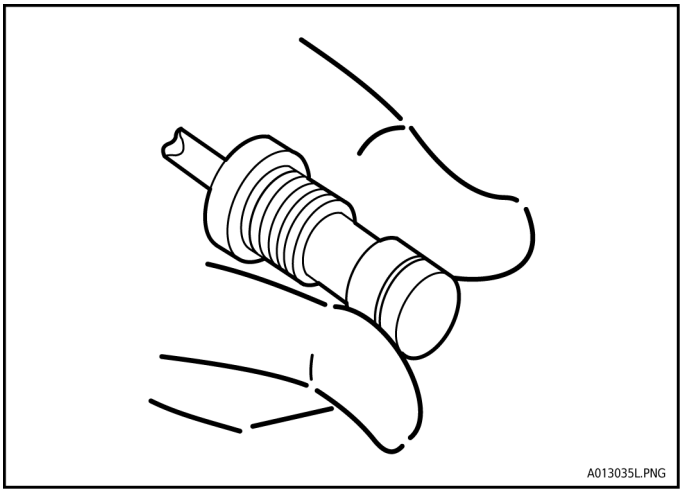

⚠ CAUTION

Do not touch membrane surface when installing the quad-ring.

6 Reinstall the quad-ring (1) onto the membrane retainer. When installed, the quad-ring must be on the very end of the CO_2 electrode. This ensures a proper fluid seal when the electrode is installed in the flow cell.

Figure 12.120 CO_2 Electrode Assembly

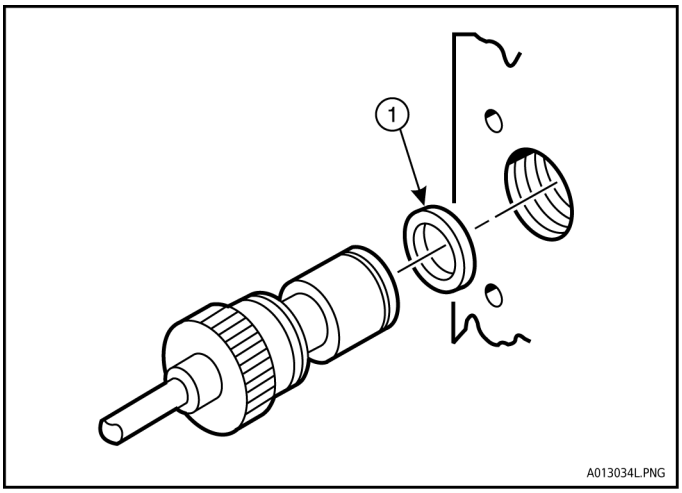

1. Quad-ring

Reinstall the CO_2 Measuring Electrode

1 Using a lint-free tissue, carefully and thoroughly dry the electrode assembly and electrode port.

Electrode and electrode port must be completely dry before reinstallation of the electrode.

2 Insert the CO_2 electrode onto the electrode port being careful to align key pin on electrode with keyway in the electrode port. Insert retainer nut and turn until finger-tight.

3 To test for proper seating of electrode, gently pull on electrode body. The electrode assembly should not move. If the electrode moves, remove it and try to install it again. If installation is difficult, check for an extra or missing quad-ring.

4 Reconnect tubing lines #33 and #32 to the electrode. Remove hemostats. Make sure the tubings fit tightly on the electrode port.

5 Reconnect the electrode cable to the appropriate connector.

6 When the necessary electrode service is completed and the electrode is properly replaced, select **OK** to exit the Maintenance Confirmation window.

NOTE While the system is priming, observe flow cell for leaks. If you notice any leaks, discontinue priming and correct the problem.

7 Select **Close** in the Result Window to exit to the ISE Service screen.

8 Select **Exit F10**.

9 Adjust the alkaline buffer damper volume. Refer to Adjust the Fluid Level of the Alkaline Buffer Damper Assembly.

⚠ CAUTION

Pinch hazard. Keep fingers clear of the ISE module as you lower it.

10 Lower the ISE module by releasing the locking pin. Be careful NOT to pinch tubing as the module is lowered.

11 Reinstall the ISE module cover.

12 Calibrate all the ISE chemistries.

Clean the EIC Port

Flushing of the EIC ports should be performed if the Electrolyte Injection Cup (EIC) becomes plugged and overflows, or as part of troubleshooting for erratic electrolyte results. The following items should be available before starting this procedure:

- 10% bleach* solution (one part 5.25% sodium hypochlorite (PN A32319), combined with nine parts deionized water). Prepare fresh. Use within 24 hours.
- 70% isopropyl alcohol
- 20 or 30 mL irrigation syringe

* DO NOT use bleach that contains additives (for example, Ultra Bleach Advantage).

⚠ CAUTION

To prevent damage due to electrical static discharge (ESD), wear the wrist ground strap when you perform this procedure. For further instructions, refer to Basic Laboratory Practice in the beginning of this chapter.

1 Loosen the two Phillips screws on the ISE module cover and remove the cover.

2 Release the locking pin on the ISE module and lift the module until it clicks into a raised, locked position.

3 Prepare ISE for maintenance and disable autoprime.

- Select:
  - **Utils** from the menu bar
  - **2 Maintenance**
  - **3 ISE Service**
  - **1 Electrode Maintenance/Drain**
- Select **Continue** to prepare for maintenance.

4 Disconnect the solenoid valves, located on each side of the EIC, at the valve connector (1) as shown below on a DxC 800. The connector is located near the EIC ports where the ends of the two solenoid valve cables meet. For a DxC 600, disconnect the solenoid wiring from positions labeled J6 and J10 on the ISE board located on the back side of the ISE module. Pull apart the valve connector to disconnect.

Figure 12.121 Solenoid Valve Connector

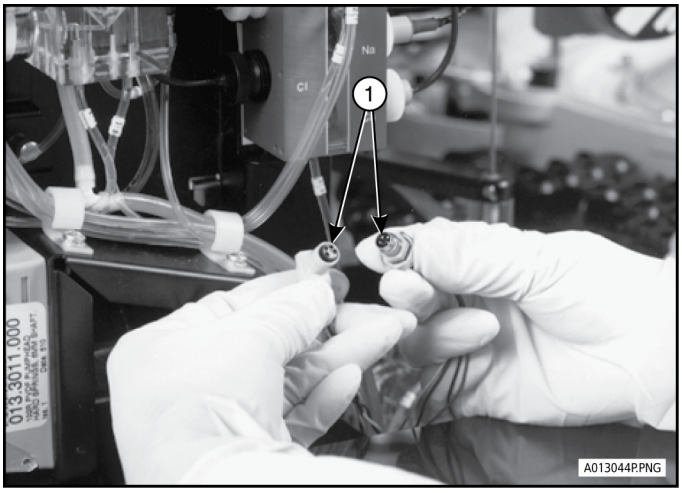

1. Solenoid Valve Connector

5 Carefully remove the Phillips screw and small washer (1) (screw removed in figure) located on the top of the EIC. Be careful not to lose the washer.

Remove the top of the EIC, with line attached. Lift off the bottom of the EIC (with solenoid valves (2) and lines attached) from the drip tray (3). For a DxC 600, lower the ISE module to access the EIC.

IMPORTANT DO NOT REMOVE the two screws on the drip tray. Removal or repositioning of the drip tray requires an MC sample probe alignment. The drip tray in the figures below has been removed for illustration only. Do not remove the drip tray.

Figure 12.122 EIC

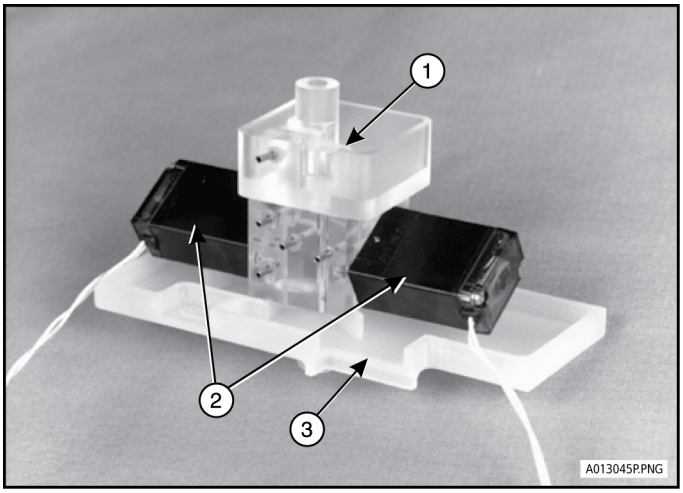

1. Phillips Screw and Washer
2. Solenoid Valves
3. Drip Tray

6 Place absorbent tissue underneath the EIC port area. Place clamps or hemostats on lines #18 (1), #24 (2), #23 (3), and #26 (4), near the EIC ports. Remove EIC lines from all the ports #18, #24, #23, #26, and #15 (5).

Figure 12.123 EIC

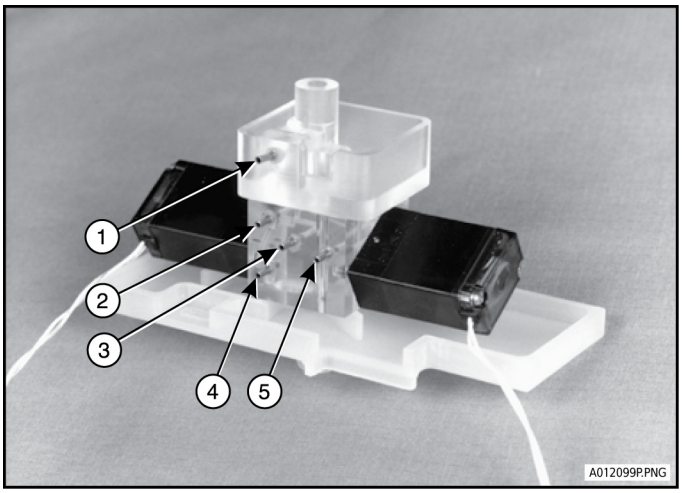

1. Port for Line #18
2. Port for Line #24
3. Port for Line #23
4. Port for Line #26
5. Port #15

7 For the DxC 800, carefully loosen the two screws (1) from the solenoid valve located on the back side of the EIC. Remove the solenoid valve and set aside.

For the DxC 600, carefully loosen the two screws from each solenoid. Remove both solenoid valves and set them on the GLUCm cover. The solenoid valve is tie-wrapped to the back of the ISE module.

IMPORTANT You will need to make sure the left and right solenoids are reinstalled in their correct positions later in this procedure.

Figure 12.124 Solenoid Valve

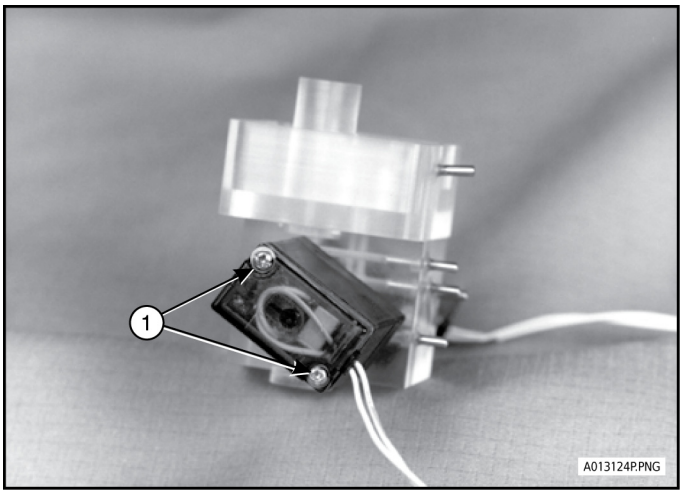

1. Screws

8 Hold the removed EIC over a sink or absorbent tissue. Using a 20 or 30 mL irrigation syringe filled with 10% bleach solution, insert the tip of the syringe into the valve port opening (1).

Figure 12.125 EIC

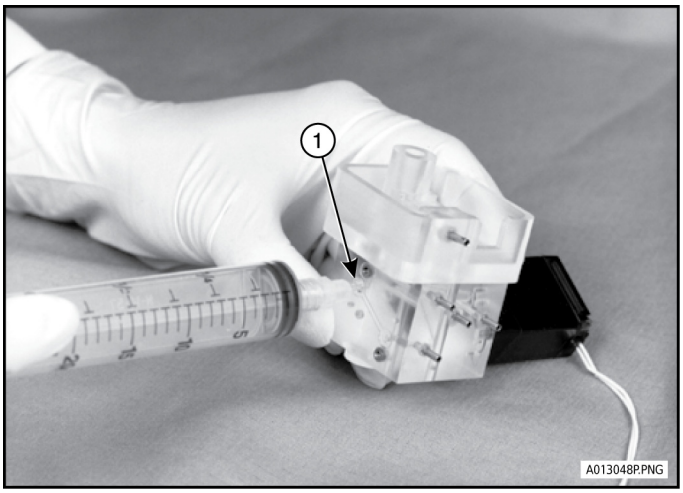

1. Valve Port Opening

9 Flush the 10% bleach solution through the valve port. This flushes the sample inject area. Allow the bleach solution to sit for one minute.

The one-minute waiting period applies only to the 10% bleach solution, and not to the following deionized water or 70% isopropyl alcohol.

10 Repeat the flushing procedure through the valve port using deionized water.

11 Repeat the flushing procedure through the valve port using 70% isopropyl alcohol.

12 Repeat the flushing procedure through the valve port using deionized water.

13 Using the syringe filled with 10% bleach solution, connect the syringe tip over the flow cell exit port #23 (1).

Figure 12.126 EIC

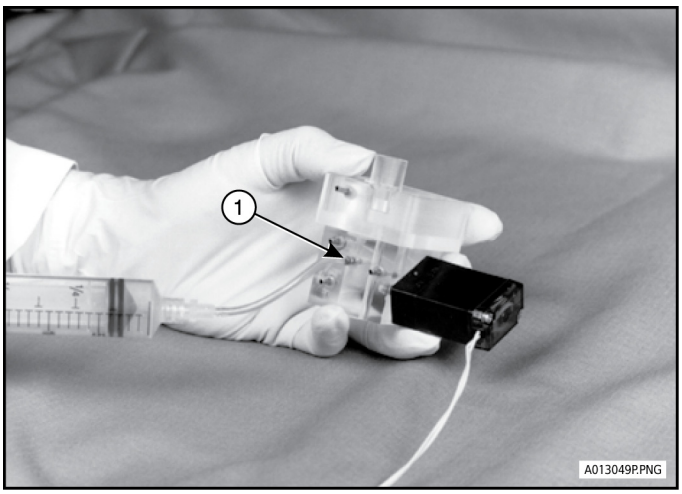

1. Flow Cell Exit Port #23

14 Flush the 10% bleach solution through the flow cell exit port. This flushes the area between the valve port and flow cell exit port. Allow the bleach solution to sit for one minute.

The one-minute waiting period applies only to the 10% bleach solution, and not to the following deionized water or 70% isopropyl alcohol.

15 Repeat the flushing procedure through the flow cell exit port using deionized water.

16 Repeat the flushing procedure through the flow cell exit port using 70% isopropyl alcohol.

17 Repeat the flushing procedure through the flow cell exit port using deionized water.

18 Thoroughly dry the EIC and solenoid valve using a dry lint-free tissue. Wipe the drip tray with deionized water and lint-free tissue. Thoroughly dry the drip tray.

19 Reinstall the solenoid valve to the EIC. Orient the valve to align the guide pins (1) on the valve with the appropriate holes (2) on the EIC. On a DxC 600 System, make sure the correct solenoid is reconnected to the left and right positions. Press the EIC and valve firmly together for a flush fit. Tighten the two screws on the valve, turning the screws until resistance is felt. At this point, tighten each screw 1/8 of a turn further. DO NOT overtighten the screws.

Figure 12.127 EIC

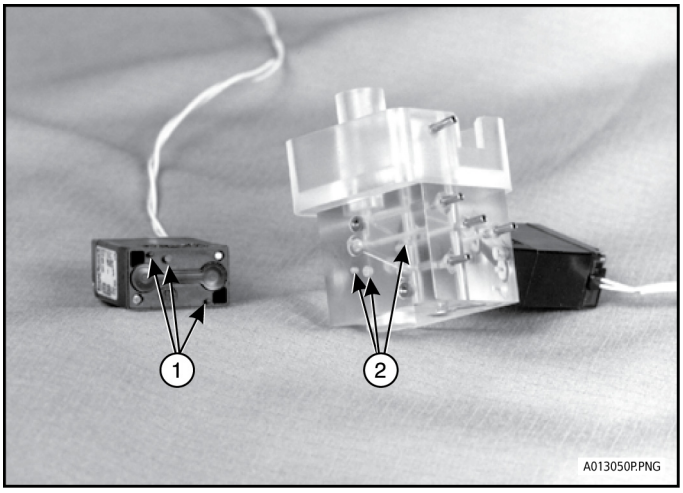

1. Guide Pins
2. Holes for Guide Pins

20 Reattach lines #18, #24, #23, #26, and #15 to the EIC ports. Refer to Figure 12.123.

21 Remove clamps from lines #18, #24, #23, and #26.

22 Reattach the EIC top sections to the drip tray. Align the guide pin on the bottom of the EIC to the hole on the drip tray and press the EIC down onto drip tray. Tighten the Phillips screw on the top of the EIC.

23 Reconnect the solenoid valves at the valve connector. On a DxC 600, reconnect the solenoid wiring appropriately to J6 and J10 on the ISE board. You may need to raise the ISE module to do this.

24 Select **OK** to close the Maintenance Confirmation window.

IMPORTANT Reagents immediately prime through the flow cell.

25 Select **Close** in the Result Window.

26 Observe EIC, lines and connections to verify that reagents are flowing properly with no leaks.

27 Select **Exit F10**.

CAUTION

Pinch hazard. Keep fingers clear of the ISE module as you lower it.

28 Lower the ISE module by releasing the locking pin. Be careful NOT to pinch tubing as the module is lowered.

29 Reinstall the ISE module cover.

30 Calibrate the ISE chemistries.

Clean the CO_2 Alkaline Buffer Lines

Bleaching of the Alkaline Buffer reagent straw and line is recommended to clean the reagent line whenever the buffer is prematurely decolorizing (fading).

Materials Required:

- Lint-free tissues
- 2 small containers
- Alkaline Buffer reagent
- 5.25% sodium hypochlorite (PN A32319)
- Deionized water

Prepare a 10% bleach* solution (one part 5.25% sodium hypochlorite (PN A32319), combined with nine parts deionized water). Use within 24 hours.

* DO NOT use bleach that contains additives (for example, Ultra Bleach Advantage).

⚠ CAUTION

To prevent damage due to electrical static discharge (ESD), wear the wrist ground strap when you perform this procedure. For further instructions, refer to Basic Laboratory Practice in the beginning of this chapter.

1 Loosen the two Phillips screws from the ISE module cover and remove the cover.

2 Release the locking pin on the ISE module and lift the module until it clicks into a raised, locked position.

3 Disconnect line #33 from the alkaline buffer reagent bottle and place the line in a small container. (The container is used to catch the line drainage while priming).

4 Unscrew and remove the alkaline buffer reagent bottle cap and insert the straw into a container of 10% bleach solution.

5 Prime the ISE CO_2 Alkaline Buffer 20 times.

- Select:
  - **Utils** from the menu bar
  - **1 Prime**
  - **MC F4**
  - **ISE CO_2 Alkaline Buffer** check box.
- Type **20** in the **Number of primes to repeat** field.
- Select **Start Prime**. Wait for prime cycles to finish.

6 Remove the alkaline buffer reagent straw from the bleach solution and insert the straw into a container of deionized water.

7 Prime the ISE CO_2 Alkaline Buffer 25 times as follows:

- Select the **ISE CO_2 Alkaline Buffer** check box.
- Type **25** in the **Number of primes to repeat** field.
- Select **Start Prime**. Wait for prime cycles to finish.

8 Remove the alkaline buffer reagent straw from the deionized water and dry the straw with lint-free tissue.

9 Install the alkaline buffer reagent cap and straw onto a new bottle of alkaline buffer reagent.

10 Prime the ISE CO_2 Alkaline Buffer 15 times as follows:

- Select the **ISE CO_2 Alkaline Buffer** check box.
- Type **15** in the **Number of primes to repeat** field.
- Select **Start Prime**. Wait for prime cycles to finish.

11 Reconnect line #33 to the reagent bottle. If the tubing does not make a tight fit, cut off the tip of the end of the tubing and reconnect.

12 Prime the ISE CO_2 Alkaline Buffer 5 times as follows:

- Select the **ISE CO_2 Alkaline Buffer** check box.
- Type **5** in the **Number of primes to repeat** field.
- Select **Start Prime**. Wait for prime cycles to finish.

13 Load the Alkaline Buffer reagent. See Load/Unload Modular Chemistries (MC).

14 Adjust the alkaline buffer damper volume. See Replace Alkaline Buffer.

⚠ CAUTION

Pinch hazard. Keep fingers clear of the ISE module as you lower it.

15 Lower the ISE module by releasing the locking pin. Be careful NOT to pinch tubing as the module is lowered.

16 Reinstall the ISE module cover.

17 Calibrate all ISE chemistries.

Clean the ISE Drain

With constant use, the flow cell drain can develop a salt bridge, possibly causing recovery anomalies for NA and CL. To prevent this build up from occurring, the drain should be cleaned periodically.

⚠ CAUTION

To prevent damage due to electrical static discharge (ESD), wear the wrist ground strap when you perform this procedure. For further instructions, refer to Basic Laboratory Practice in the beginning of this chapter.

Materials Required:

- Deionized water
- Lint-free tissues
- Phillips screwdriver
- Cotton swabs

---

1 Loosen the two Phillips screws on the ISE module cover and remove the cover.

---

2 Release the locking pin on the ISE module and lift the module until it clicks into a raised, locked position.

---

3 Prepare for ISE maintenance.

Select:

- **Utils** from the menu bar
- **2 Maintenance**
- **3 ISE Service**
- **1 Electrode Maintenance/Drain**
- **Continue.**

4 Loosen the screw at drain top (1). Gently grasp the ISE drain top and remove the top. Do not lose the attached metal drip screen (2). (The top may require slight wiggling back and forth to remove.)

Figure 12.128 ISE Drain Top

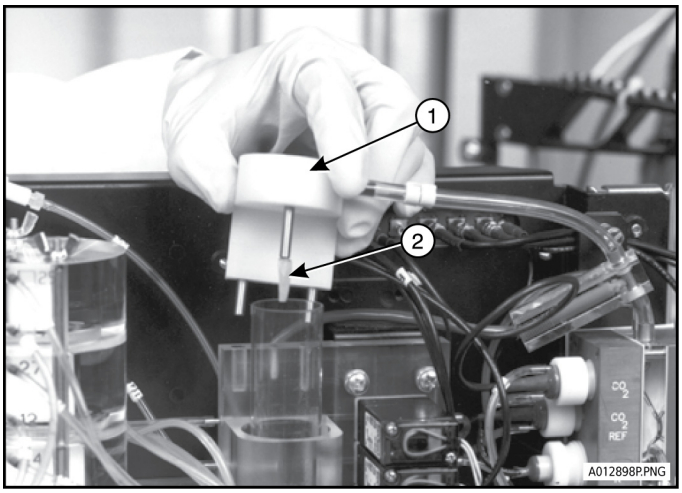

1. Drain Top **2.** Drip Screen

5 Carefully set aside the drain top (with tubing #22 attached).

6 Remove the drain tube (1) from the drain.

Figure 12.129 ISE Drain Tube

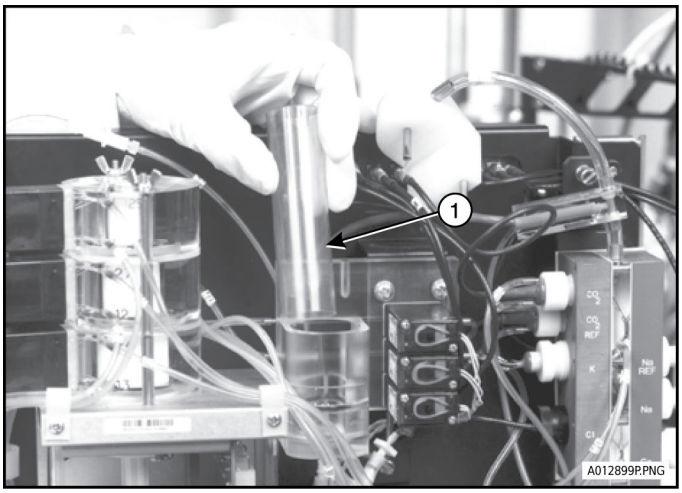

1. Drain Tube

7 Using four to five cotton swabs soaked with deionized water, clean the inside of the lower drain and the top of drain.

8 Clean the drain tube with deionized water, or replace it with a new drain tube.

9 Reinstall the cleaned drain tube, or install a new drain tube (PN 472698). Insert the drain tube down through the O-ring until it sits flush on the bottom of the ISE drain.

NOTE If the fit is too snug to insert the drain tube, it may be necessary to lubricate the O-ring on the inside of the lower drain. Without removing the O-ring, apply a thin coat of Silicone compound to the O-ring area inside the lower drain, prior to inserting the drain tube.

10 Clean the ISE drain top using a lint-free tissue soaked with deionized water. Thoroughly wipe dry the ISE drain.

IMPORTANT Do not pinch, damage, or disconnect the adjacent connector wires while reinstalling the drain top.

11 Reinstall the ISE drain top onto the drain. Align the two posts extending from the bottom of the drain top, with the holes in the acrylic drain mount, and gently lower the drain top until it sits flush (with no gaps) on the mount.

Tighten the screw at drain top.

12 Select **OK** to exit the Maintenance Confirmation window when procedure is complete.

13 After priming is complete, select **Close** in the pop-up Results Window.

14 Select **Exit F10**.

⚠ CAUTION

Pinch hazard. Keep fingers clear of the ISE module as you lower it.

15 Lower the ISE module by releasing the locking pin. Be careful NOT to pinch tubing as the module is lowered.

16 Reinstall the ISE module cover.

17 Calibrate all the ISE chemistries.

Flush the Flow Cell (Manual)

Flushing the flow cell is recommended for troubleshooting drift, back-to-back errors and range errors that may be caused by plugs or debris lodged in the electrode ports. The following items should be available before starting this procedure:

Materials Required:

- Lint-free tissues
- Flow cell flush kit (PN 473181)
- ISE Buffer
- 20 mL syringe
- Hemostat

⚠ CAUTION

To prevent damage due to electrical static discharge (ESD), wear the wrist ground strap when you perform this procedure. For further instructions, refer to Basic Laboratory Practice in the beginning of this chapter.

1 Loosen the two Phillips screws on the ISE module cover and remove the cover.

2 Release the locking pin on the ISE module and lift the module until it clicks into a raised, locked position.

3 Prepare for ISE Maintenance.

Select:

- **Utils** from the menu bar
- **2 Maintenance**
- **3 ISE Service**
- **1 Electrode Maintenance/Drain**
- **Continue**.

4 Use a hemostat to clamp off line #35 at the top of the flow cell. Line the area under the flow cell with absorbent tissue.

5 Remove line #23 from the bottom of the flow cell. Attach the connector fitting (1) on the small diameter tubing, included in the Flow cell flush kit, to the syringe. Connect the open end of the tubing to the bottom of the flow cell.

Figure 12.130 ISE Flow Cell

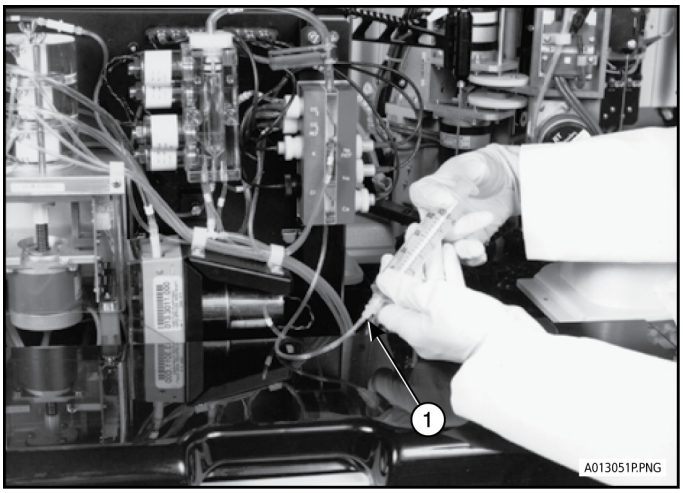

1. Connector Fitting

6 Without removing the hemostat, remove line #35 from the top of the flow cell. Remove line #27 from the front of the flow cell in order to allow residual acid to leak out.

7 Draw back on the syringe. This withdraws any remaining solution left in the flow cell and removes any material that can be causing the occlusion of the small lumen.

NOTE The procedure may be concluded here if the problem has been resolved. Proceed to Step 10.

If the problem is not resolved, proceed to the next step.

8 Re-attach line #27 to the front of the flow cell. Remove the syringe and empty the contents. Fill the syringe with ISE Buffer.

9 Attach the connector fitting (1) of the large diameter tubing, included in the Flow cell flush kit, to the syringe. Connect the open end of the tubing to the top of the flow cell. Flush the buffer through.

Figure 12.131 ISE Flow Cell

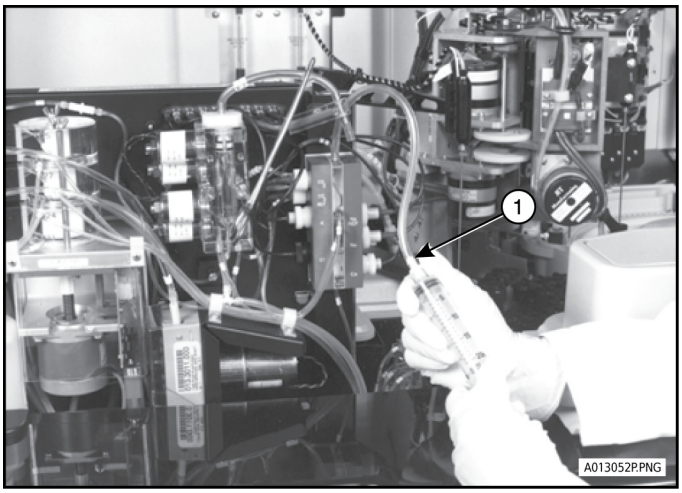

1. Connector Fitting

10 Reattach Line #35 to the top and Line #23 to the bottom of the flow cell. If necessary, attach Line #27 to the front of the flow cell. Remove the hemostat.

11 When all components are in place for the flow cell select **OK** to prime the flow cell. Select **Close** in the pop-up window to exit the ISE Service screen.

12 Prime the flow cell 5 times.

Select:

- **Utils** from the menu bar
- **1 Prime**
- **MC F4**
- **ISE All** check box
- Type **5** in the **Number of primes to repeat** field
- Select **Start Prime**.

⚠ CAUTION

Pinch hazard. Keep fingers clear of the ISE module as you lower it.

13 Lower the ISE module by releasing the locking pin. Be careful NOT to pinch tubing as the module is lowered.

14 Reinstall the ISE module cover.

15 Calibrate the ISE chemistries.

Flush the Sample and Reagent Probe

The sample or reagent probes may need flushing when the probe becomes blocked or when troubleshooting recommends flushing to clean the inside of the probe.

Materials Required:

- Probe Cleaner Tubing Assembly (PN 756613)
- Small cup for collecting wash solution
- 50 mL of 10% dilution of Wash Concentrate II solution per probe

⚠ CAUTION

To prevent damage due to electrical static discharge (ESD), wear a wrist ground strap when you perform this procedure. For further instructions, refer to Basic Laboratory Practice in the beginning of this chapter.

1 Press the **STOP** button on the DxC to stop all motors.

2 Place a small cup under the collar wash of the probe to be flushed.

3 Unscrew the upper fitting (1) above the bead assembly to disconnect the DI water line. Do not remove the level sense bead (2) otherwise alignments will be required.

Figure 12.132 CC Sample Probe

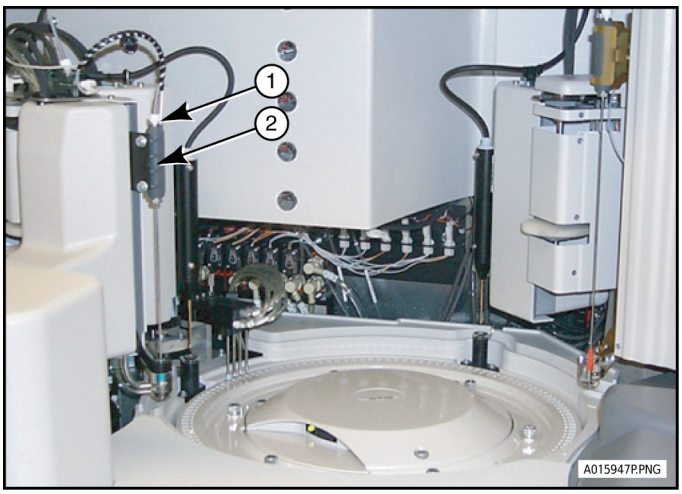

1. Upper Fitting
2. Level Sense Bead

4 Connect the Probe Cleaner Tubing Assembly to the top of the probe assembly where the fitting for the probe tubing was removed in Step 3. Tighten no more than finger tight.

5 Fill a 10 mL syringe with diluted wash solution. Connect the syringe to the other end of the probe cleaning assembly.

6 Dispense all of the syringe contents through the probe into the collection cup. Repeat until 50 mL has been dispensed. Empty the collection cup as often as necessary.

7 Remove the cleaning assembly from the probe. Clean the probe tubing fitting with a cotton swab wrapped in lint-free tissue and moistened with deionized water. Dry the probe tube fitting with a cotton swab wrapped in lint-free tissue.

8 Reconnect the DI water line into the black fitting at the top of the probe.

9 Home the instrument.

- Select **Instr Cmd**
- Select **1 Home**
- Select **1 DxC**.

10 Perform the Clean Flow Cell (Automated) procedure. You can deselect Cups for this procedure.

NOTE Run controls to make sure that the cleaning completely removed the blockage.

Replace the Sample and Reagent Probe

The Sample or Reagent Probe should be replaced when visual inspection or chemistry performance indicates there is a compromised probe condition (scratches, pits or blockage). These instructions cover installation of the replaceable style probe.

⚠ CAUTION

To prevent damage due to electrical static discharge (ESD), wear a wrist ground strap when you perform this procedure. For further instructions, refer to Basic Laboratory Practice in the beginning of this chapter.

Replace the Old Probe

1 Press the **STOP** button on the instrument to stop all motors.

2 Using a 3/8 inch open end or adjustable wrench, loosen the nut (1) at top of probe.

Figure 12.133 CC Sample Probe

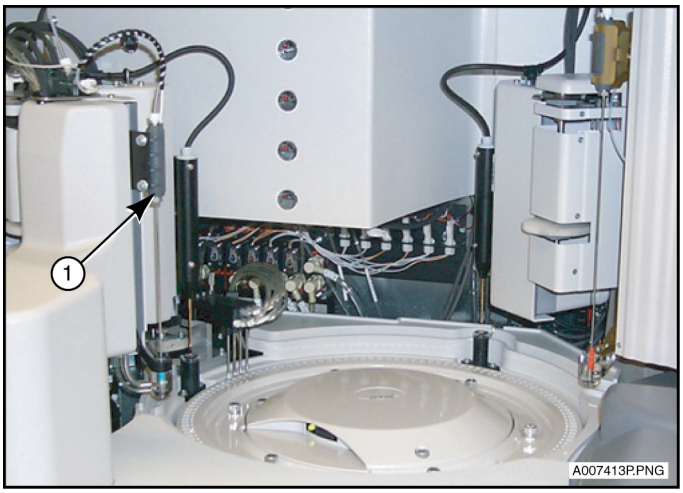

1. Nut at Top of Probe

3 Pull downward first on the probe, then up and to the side to remove the probe from the collar wash.

4 Check to make sure the O-ring is on the nut. If the O-ring stayed inside the level sense bead, bump it loose with a wooden applicator stick.

Install the New Probe

1 Remove the protective sleeve from the probe tip and slip the probe down into the collar wash block with the threaded end upward.

2 Install a new O-ring in the groove on the tip of the nut. It is OK to reuse an undamaged O-ring if the new O-ring is lost.

3 Slip the probe up, into the level sense bead fitting being careful not to lose the O-ring.

4 Tighten the probe with a 3/8" wrench until it makes solid contact and locks within the fitting.

5 Wipe the outside and bottom portion of the probe with 70% isopropyl alcohol. Proceed to Additional Procedures in this section.

Additional Procedures

Home, prime and align the system to resume proper system operation.

1 Select:

- **Instr Cmd**
- 1 Home
- **1 DxC**.

2 Select:

- **Utils** from the menu bar,
- **1 Prime**. Prime the probe that was replaced one time and watch for leaks or drips.
  - If replacing the MC Sample Probe
    - Select **MC F4**
    - Select **Sample Delivery Subsystem** check box
    - Type **1** in the **Number of primes to repeat** field
    - Select **Start Prime**.

- If replacing the CC Sample Probe
  - Select **CC F2**
  - Select **Sample Delivery Subsystem** check box
  - Type **1** in the **Number of primes to repeat** field
  - Select **Start Prime**.
- If replacing either CC Reagent Probe
  - Select **CC F2**
  - Select **Reagent Delivery Subsystem** check box
  - Type **1** in the **Number of primes to repeat** field
  - Select **Start Prime**.

3 Follow the appropriate alignment procedure as described in the UniCel DxC Synchron Clinical Systems *Reference Manual*, System Tools.

- If the current probe is re-installed after inspection without moving the bead assembly,
  - No alignments required.
- If a new MC Sample Probe is installed,
  - MC Sample Probe Vertical Home
  - MC Sample Probe Sample Height
  - MC Sample Probe Cup Height
  - MC Sample Probe EIC Height.
- If a new CC Sample Probe is installed,
  - CC Sample Probe Vertical Home
  - CC Sample Probe Cuvette Height
  - CC Sample Probe Sample Height.
- If a new Reagent Probe is installed in either position,
  - Reagent Probe (A or B) Vertical Home
  - Reagent Probe (A or B) Height in Cuvette
  - Reagent Probe (A or B) Height in Cartridge.
- If the bead assembly is removed or repositioned,
  - all rotary and vertical alignments for that probe must be performed.

When you perform the Vertical Home alignment and verify the proper probe position in the collar wash, follow the instructions on the screen. The proper positions are indicated in Figure 12.134 and Figure 12.135.

Figure 12.134 CC and MC Sample Probe

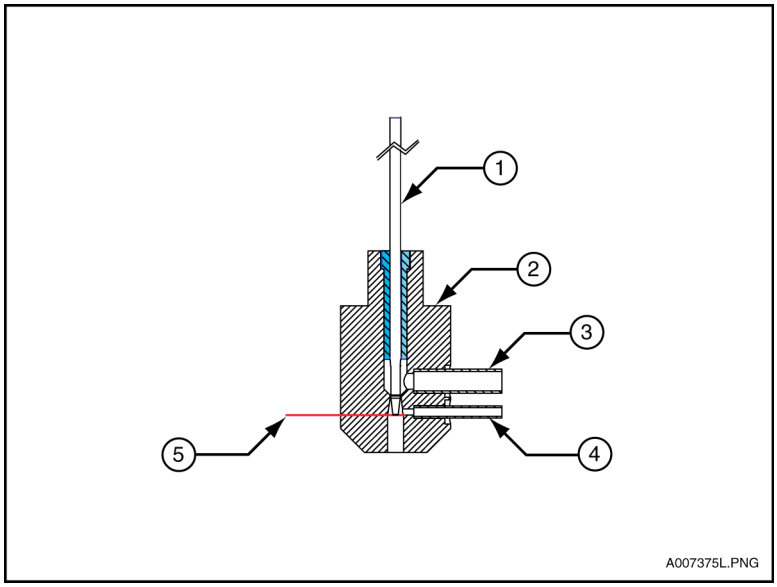

1. Sample Probe
2. Collar Wash
3. Waste Port
4. Wash Port
5. Probe tip is even to the bottom edge of the wash port

Figure 12.135 Reagent Probe A and B

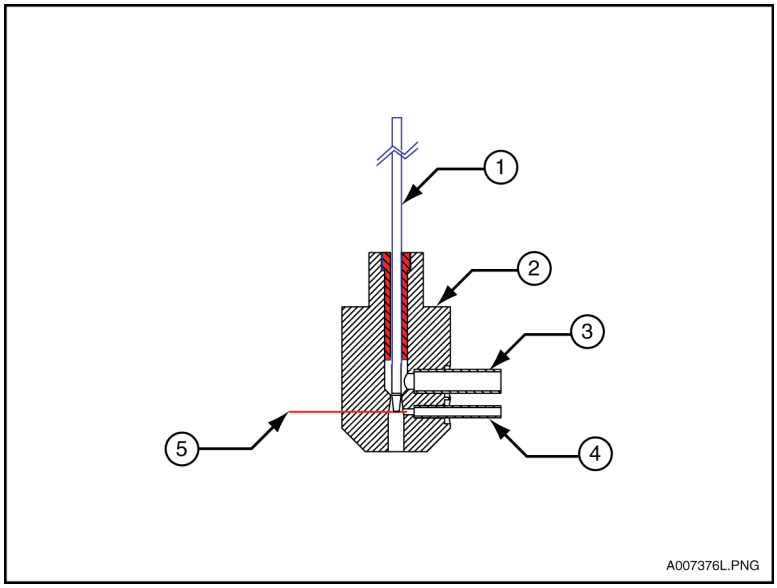

1. Reagent Probe
2. Collar Wash
3. Waste Port
4. Wash Port
5. Probe tip is even to the middle of the wash port

Confirm Instrument Performance

When the probe installation is complete, run the controls to confirm proper instrument performance. If the controls are out but there are no visible leaks, recalibrate all chemistries and rerun controls.

Clean the CC Sample Probe, Reagent Probes and Mixers

The following procedure describes the automated procedure to wash the CC sample and reagent probes and mixers. This routine takes the system approximately 15 minutes.

Materials Required:

- CCWA cartridge (PN 657133)

1. Load the CCWA cartridge onto the system. See Load/Unload Cartridge Chemistries (CC).

2. Select:
   - **Utils** from the menu bar
   - **2 Maintenance**
   - **2 Cartridge Chemistry Probe Cleaning**.

   Follow all instructions on the screen.

3. Select **Continue**.

4. A pop-up message confirms that probe and mixer cleaning is complete. Select **Close** to exit.

5. Select **Exit F10**.

Clean the MC Sample Probe Collar Wash Assembly

Perform the MC Sample Probe Collar Wash Assembly procedure whenever:

- You observe a build up of residue on the collar wash assembly, or
- You suspect that a dirty collar wash assembly is causing increased level sense errors.

Materials Required:

- One sample rack
- One 2 mL cup
- Undiluted household bleach* (Sodium hypochlorite 5.25%) (PN A32319)

---

1 Select:

- **Utils** from menu bar
- **4 Diagnostics**
- Functional Area **Sample System**
- Sub-functional Area **MC Chemistry Sample Crane**
- Test Number **1 Level Sense Test**.

---

2 Type the Rack ID into the **Rack ID** field. Select the appropriate Rack Position. Select **Cup** as container type.

---

3 Fill the cup with bleach. Place it in the specified rack and position.

---

4 Loosen the two Phillips screws on the cover of the DxC Load Area and remove the cover. Place the rack directly onto the DxC load area.

---

5 Select **Start**.

The System automatically loads the rack and the MC probe aspirates the sample.

If an error occurs during the procedure, the system displays the error message in the message line at the bottom of the screen. Ignore the values shown in the fluid level column.

---

6 Allow the test to continue until 10 to 12 data points are shown in the fluid level column. (The MC sample probe has aspirated approximately 12 times.) Select **Stop** to end the testing. The test rack automatically unloads.

---

7 Select **Close** to exit the screen. Then select **Exit F10** to leave the Diagnostic screen.

---

8 Select:

- **Utils** from the menu bar
- **1 Prime**
- **MC F4**

---

* DO NOT use bleach that contains additives (for example, Ultra Bleach Advantage).

- **Sample Delivery Subsystem** check box. Type **5** in the **Number of primes to repeat** field.
- **Start Prime**. The collar wash assembly is rinsed with water.

If necessary, clean the exterior of the MC sample probe. See Clean Probes (Exterior) in this chapter.

Clean the Precipitate in PHOSm (DxC 800 Only)

The phosphorus (PHOSm) cup should be cleaned when protein precipitate accumulates at the top of the liquid surface. The precipitate may not clear from the cup upon draining causing noise flags to occur.

Materials Required:

- Cotton swab
- Deionized water

1. Using an applicator swab, skim off the visible precipitate floating at the top of the PHOSm cup surface.

2. Drain the PHOSm cup.
   - Select:
     - **Utils** from the menu bar
     - **2 Maintenance**
     - **4 Cup Maintenance**
     - **Phosphorus** button
     - **Drain**.

   The cup drains in preparation for maintenance.

3. Clean the inside of the PHOSm cup with an applicator swab moistened with deionized water.

4. Select **OK** when the cup cleaning is complete. The cup primes five times with water.

5. Select **Close** to exit the Result Window.

6. Select **Cancel** to exit the Cup Maintenance dialog box.

Inspect the Cuvette Washer Probes

The following procedure is used to inspect the cuvette washer probes. If a cuvette wash station probe is obstructed by debris (such as glass from a broken cuvette), the DxC may provide inaccurate results. If any of these steps fail, contact Beckman Coulter Support Center or a local Beckman Coulter representative to identify and resolve any suspected problems.

Materials Required:

- Three 13 x 100 test tubes
- Three 2 mL sample cups
- Beaker

1 Remove the cuvette wash station cover. Pull up on the two locking pins. Move the sample probe and mixer aside, and lift the cover out.

2 Loosen the two thumbscrews (1) on each side of the cuvette washer and lift off the upper section of the cuvette wash assembly.

Figure 12.136 Cuvette Wash Station Thumbscrews

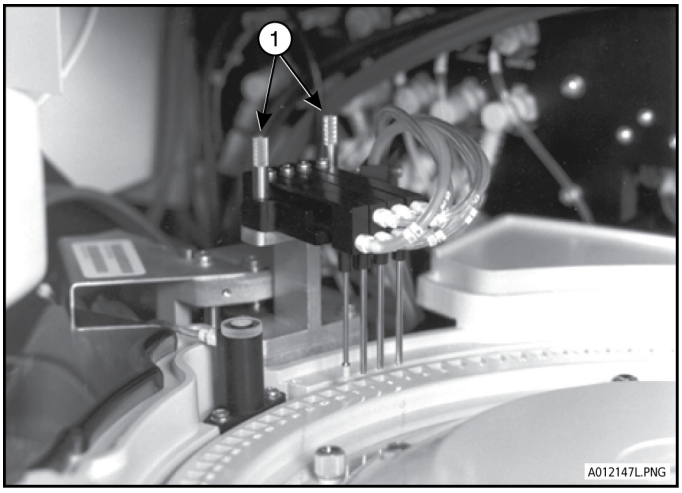

1. Thumbscrews

3 Hold the wash station probes over a beaker or a container.

⚠ CAUTION

The Reaction Carousel continues to rotate during the Prime cycle.

4 Prime the wash lines one time.

- Select:
  - **Utils** from the menu bar

- **1 Prime**
- **CC F2**
- **Cuvette Wash**.

- Type **1** in the **Number of primes to repeat** field.
- Select **Start Prime**.

---

5 Observe the wash probe spray pattern of the first three probes during the prime. There should be three distinct and straight streams in a triangular pattern spraying from each probe.

NOTE If a pattern of distinct streams is not observed during prime, check for proper water pressure in the hydropneumatic system. If the water pressure is adequate, check the probe tips for broken glass.

The probe with the cuvette wiper does not dispense fluid.

---

6 When the priming has stopped, turn the wash station to check the tips of the probes for obstructions. Check for debris like glass from the cuvettes or resin beads, which can cause a blockage of the probes. Manually remove any obstruction. You can use a small can of compressed air to remove the blockage by blowing air through the probes from the probe top. If you cannot remove the blockage, contact Beckman Coulter Support Center for instructions on how to replace cuvette washer probes.

---

7 Place each of the first three wash probes into three 13 x 100 mm test tubes (one probe per test tube). Be careful to keep the probes above the surface of the liquid.

---

8 Prime the wash lines one time.

- Select:
  - **CC F2**
  - **Cuvette Wash**.
- Type **1** in the **Number of primes to repeat** field.
- Select **Start Prime**.

---

9 At the end of the prime check for the following conditions:

- The amount of liquid that is delivered to the test tubes.
- The volume in tube 1 should be approximately equal to the volume in tube 2.
- The contents of tubes 1 and 2 should appear to have bubbles.
- The volumes in tubes 1 and 2 should be approximately 20% greater than the volume in tube 3.
- The contents in tube 3 should appear clear.

NOTE Unlike running a test, precise volumes are not required for washing and rinsing.

10 Position the probes 1 through 3:

- Near the bottom of three 2.0 mL sample cups (one probe per cup)

  OR

- Near the bottom of three small sample tubes (one probe per tube)

NOTE Do not push the probes against the bottom of the sample containers. This restricts the vacuum.

11 Prime the wash lines one time.

- Select:
  - **CC F2**
  - **Cuvette Wash**.
- Type **1** in the **Number of primes to repeat** field.
- Select **Start Prime**.

12 Check the cups at the end of the prime cycle. Ensure that no liquid remains in the cups.

NOTE If liquid remains in the cups, an obstruction may still be present.

13 Replace the upper section of the cuvette wash assembly and tighten the screws finger-tight.

14 Orient the wiper square to the cuvette opening in the cuvette retaining ring.

15 Reinstall the Cuvette Wash Station cover.

Wash All Cuvettes With System Wash

The following procedure describes the automated procedure to clean all the cuvettes on the Reaction Carousel. This procedure should be performed as needed to maintain chemistry performance. This routine takes approximately 20 minutes.

1 Select:

- **Utils** from the menu bar
- **2 Maintenance**
- **6 Wash All Cuvettes**.

Follow all instructions on the screen.

2 Select **Continue** to perform the procedure.

You can exit this procedure at any time before it is completed.

- To exit, select:
  - **STOP** on the instrument; wait for system to finish processing
  - **OK** to clear the pop-up message
  - **Cancel** to exit the procedure screen
  - **Instr Cmd** from the menu bar
  - **1 Home**
  - **1 DxC**.

3 When the procedure is complete, select **Close** to exit the Result Window.

4 Select **Exit F10** to exit Maintenance menu.

Wash the CC Reagent Cuvettes with CCWA

CC Reagent Wash All Cuvettes is an automated procedure that cleans all the cuvettes on the Reaction Carousel using a cartridge filled with cleaning solution. This procedure should be performed on dirty cuvettes that require additional washing beyond the Washing All Cuvettes procedure. This routine takes approximately 38 minutes.

Materials Required:

- CCWA cartridge (PN 657133)

1 Load the CCWA cartridge on the system. See Load/Unload Cartridge Chemistries (CC).

2 Select:

- **Utils** from the menu bar
- **2 Maintenance**
- **9 CC Reagent Wash All Cuvettes**.

Follow all instructions on the screen.

3 Select **Continue** to perform the procedure.

You can exit this procedure at any time before it is completed.

- To exit, select:
  - **STOP** on the instrument; wait for system to finish processing
  - **OK** to clear message
  - **Cancel** to Exit the procedure screen
  - **Instr Cmd** from the menu bar
  - **1 Home**
  - **1 DxC**.

4 When the procedure is complete, select **Close** to exit the Result Window.

5 Select **Exit F10** to exit the Maintenance menu.

Clean the Work Surfaces

Clean all exposed work surfaces and covers that may have contacted sera or other biological fluids.

1 Remove reaction carousel cover (1) and sample carousel cover (2).

Figure 12.137 DxC Work Surfaces

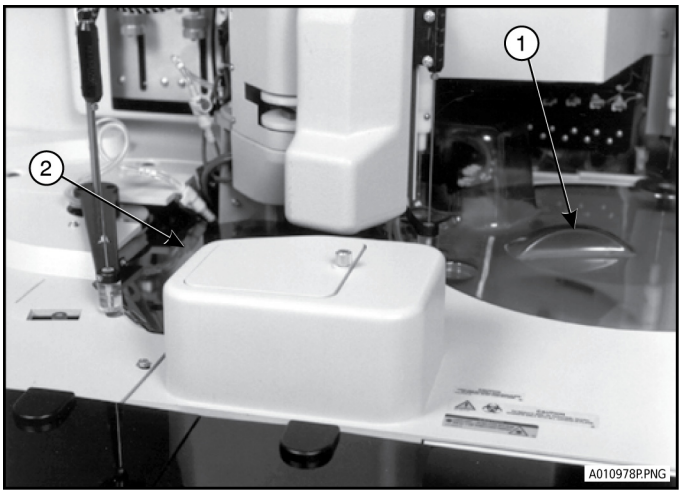

1. Reaction Carousel Cover **2.** Sample Carousel Cover

2 Scrub the covers with a good grade of disinfectant soap and a soft brush.

3 Rinse the covers in deionized water. Dry thoroughly using lint-free tissue.

4 Reinstall the covers.

5 Wipe all exposed surfaces on the system with a 10% bleach* solution (one part 5.25% sodium hypochlorite (PN A32319), combined with nine parts deionized water). The surfaces include: sample rack area covers, pull down cover, compartment doors, keyboard, table surfaces and sides of the console.

Wipe the touchscreen with 70% isopropanol, water, or any commercial computer screen cleaner.

Decontaminate the Sample Racks

1 Prepare a 10% bleach* solution (one part 5.25% sodium hypochlorite (PN A32319), nine parts deionized water). Use within 24 hours.

2 Using a large container or sink, immerse all sample racks in the bleach solution.

3 Allow the sample racks to soak at room temperature in the 10% bleach solution for 15-20 minutes.

4 Remove the racks, rinse with deionized water or tap water, and allow to dry.

IMPORTANT Repeated decontamination of racks may result in rack label damage. If the label starts to bubble or peel, remove and replace with a new label. See Rack ID Labels.

Decontaminate the DxC Instrument

This procedure provides instructions for cleaning and decontaminating system tubing, waste sumps, and reservoirs on the DxC. Perform this procedure when microbial contamination is either evident or suspected. This procedure should take about 1.5-2.0 hours.

* DO NOT use bleach that contains additives (for example, Ultra Bleach Advantage).

⚠ CAUTION

All biohazard precautions should be observed when doing maintenance, service, or troubleshooting on the system. This includes but may not be limited to wearing gloves and eye shields, and washing hands after working on contaminated portions of the system.

Materials Required:

- 10% bleach solution (one part 5.25% sodium hypochlorite (PN A32319), combined with nine parts deionized water) - 8 Liters
- Deionized water
- Spanner wrench tool

---

1 Shut down the hydropneumatic system:

- Select **Utils** from the menu bar.
- Select **5 Hydropneumatic Maintenance**.
- Proceed to Step 2 only when the following message appears:
  "*The Hydropneumatic system has been shut down.*"

---

2 Open the lower, middle compartment door of the DxC; release latch (1) on the hydropneumatics drawer and pull out the hydropneumatic system.

Figure 12.138 DxC Hydropneumatics Drawer

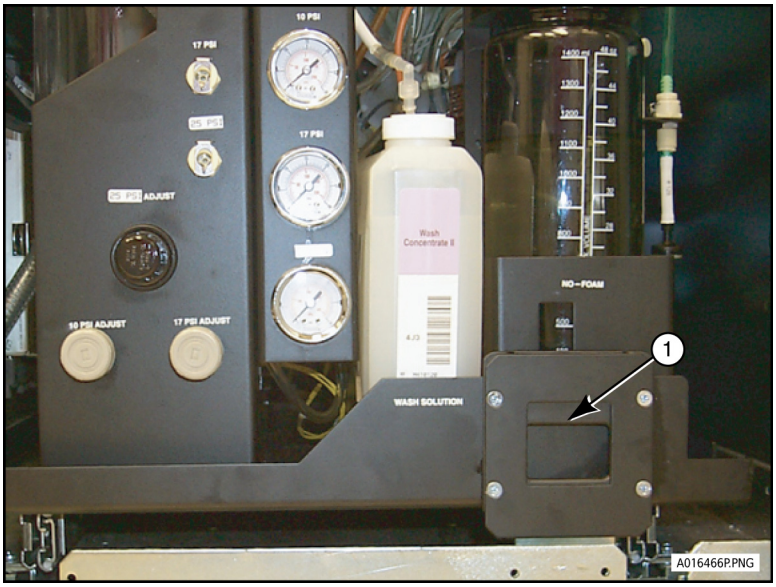

1. Release Latch

3 Remove the Wash Concentrate bottle (1), the DI Water Reservoir canister (2), and the DI Water canister (3) from the system. If necessary, use the spanner wrench tool to remove the canisters. Refer to the UniCel DxC Synchron Clinical Systems *Reference Manual*, CHAPTER 4, *Advanced Maintenance and User Servicing*, Cleaning Hydro Canisters, Waste Sumps, Reservoirs, and Float Sensors, to remove the DI Water reservoir and DI Water canister. Canisters are labeled.

Figure 12.139 DxC Hydropneumatics System--Right Side

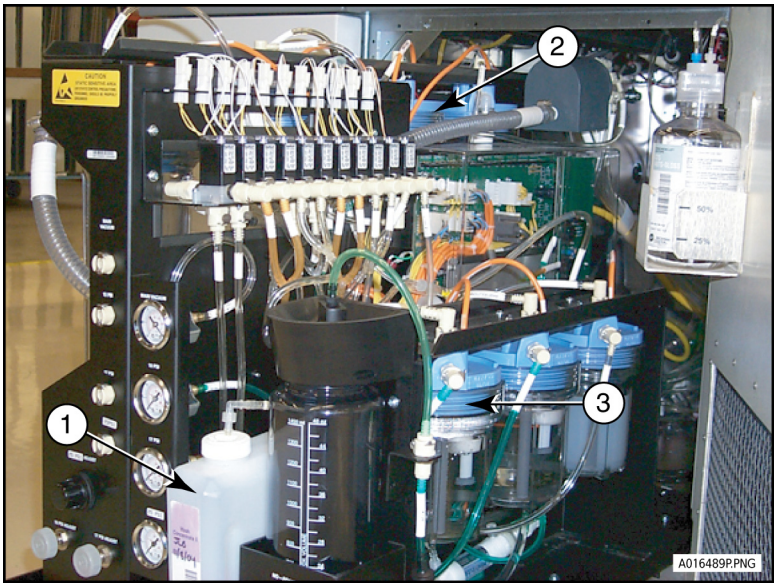

1. Wash Concentrate Bottle
2. DI Water Reservoir Canister (on left side)
3. DI Water Canister

4 Empty the canisters and the Wash Concentrate bottle. Then fill the canisters and the empty wash concentrate bottle with a 10% bleach solution about two-thirds full.

5 Install both canisters with the 10% bleach solution back onto the system using the spanner wrench tool, if necessary. Make sure the large O-ring is in place and both canisters fit tightly.

6 Install the Wash Concentrate bottle with the 10% bleach solution back onto system.

7 Restart the hydropneumatic system:

- Select **Close** from the Hydropneumatic Shutdown screen.
- Select **Exit F10** to exit the Maintenance screen.

8 Prime the 10% bleach solution through the CC and MC subsystems as follows:

- Select **Utils** from the menu bar
- Select **1 Prime**
- Select the **All CC Subsystems** check box
- Type **10** in the **Number of primes to repeat** field
- Select **MC F4**
- Select the following check boxes:
  - ☑ **All cup chemistries** (ALBm, CREm, GLUCm, PHOSm, TPm, BUNm/UREAm)
  - ☑ **DI water**
  - ☑ **Sample Delivery Subsystem**
  - ☑ **EIC wash**
- Select **Start Prime**. Allow all primes to complete.

9 Repeat Steps 1-8 three more times.

10 After the last prime is completed, allow the system to sit idle with 10% bleach solution for ten minutes.

11 Shut down the hydropneumatic system:

- Select **Utils** from the menu bar
- Select **5 Hydropneumatic Maintenance**
- Proceed to Step 12 only when the following message appears:
  "*The Hydropneumatic system has been shut down.*"

12 Remove both DI Water canisters and the Wash Concentrate bottle from the system. Use the spanner wrench tool, if necessary. Empty out the bleach solution and rinse out the canisters with DI water.

13 Install both empty canisters back onto the system using the spanner wrench tool, if necessary. Make sure the large O-ring is in place and both canisters fit tightly.

14 Place a new Wash Concentrate bottle onto the system.

15 Restart the hydropneumatic system:

- Select **Close** from the Hydropneumatic Shutdown screen.
- Select **Exit F10** to exit the Maintenance screen.

16 Load wash concentrate onto system. See Load/Unload Modular Chemistries (MC).

17 Push in the locks on each side of the drawer and push the drawer in. Close the door.

Replace the CTS Wick

This procedure applies to DxC instruments with the Closed Tube Sampling (CTS), 1-Blade Thick Option. The wick is found within the Cap Piercer Assembly.

The Cap Piercer wick and blade are normally replaced every two months during scheduled maintenance. However, if blood is not continuously wiped from the sample tube caps before they are loaded onto the instrument, the CTS blade/wick area becomes dirty. This may cause a contaminated condition. As a result, use this procedure to replace the wick as needed.

⚠ CAUTION

All biohazard precautions should be observed when doing maintenance, service, or troubleshooting activities on the system. This includes but may not be limited to wearing gloves and eye shields, and washing hands after working on contaminated portions of the system.

Materials Required:

- 1 medium flat-edge screwdriver
- 1 small tweezers
- 2 plastic trays (approximately 9 inches x 12 inches) (23.9 centimeters x 30.5 centimeters)
- Absorbent paper towel
- 1 bottle of Auto-Gloss
- 1 Wick Kit (PN A26924)
- Cotton-tip applicators (6 inches [15.2 centimeters] long, or greater)
- Disposable pipettes
- Personal protective gear such as rubber gloves and eye shields
- Scissors

1 Select:

- **Utils** from the menu bar
- **2 Maintenance**
- **1 CTS Blade Replacement**
- **Continue.**

Wait for the Maintenance Confirmation window.

⚠ CAUTION

DO NOT select OK when the cover is removed. If you select OK the Cap Piercer Carriage moves up and causes a pinch hazard.

2 Lift the instrument cover.

3 Use a flat-edge screwdriver to fully loosen the two screws (1) from Cap Piercer Cover (2).

Figure 12.140 Cap Piercer Cover

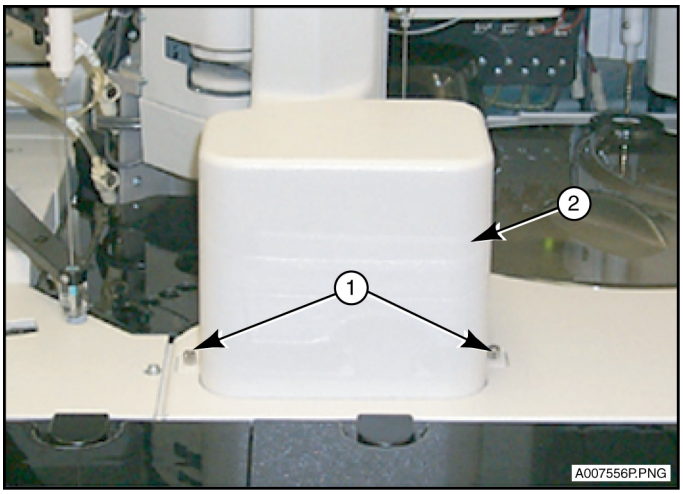

1. Screws **2.** Cap Piercer Cover

4 Lift and remove the Cap Piercer Cover and set it aside.

⚠ CAUTION

The points of the Blade (3) are very sharp and extend below the Wash Tower (4). To prevent possible injury or exposure, avoid the bottom of the Wash Tower.

5 Refer to Figure 12.141. Use a flat-head screwdriver to loosen the two Blade Holder Screws (1) from Blade Holder (2).

Figure 12.141 Cap Piercer

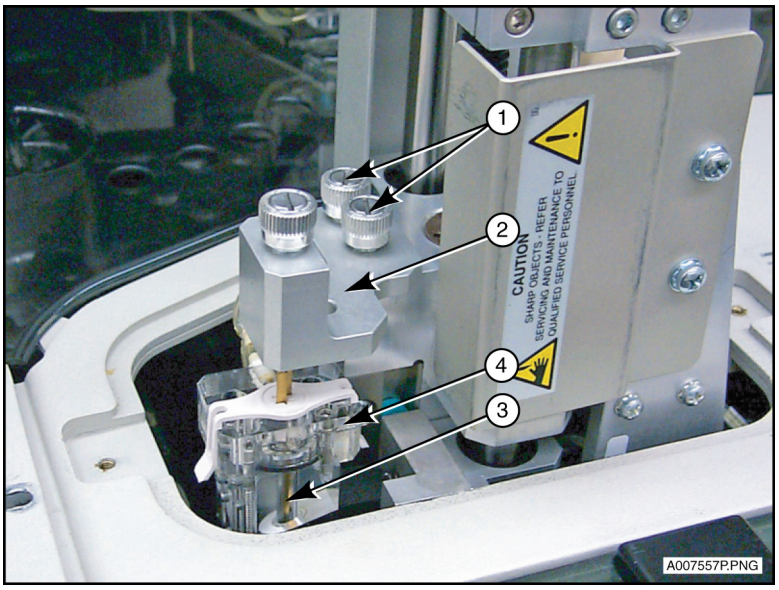

1. Blade Holder Screws
2. Blade Holder
3. Blade
4. Wash Tower

6 Refer to Figure 12.142. Lift the Blade Assembly (1) straight up as shown.

NOTE The Blade Holder Assembly includes the Blade Holder and the Blade.

⚠ CAUTION

The points on the end of the Blade are very sharp and have been exposed to potentially biohazardous fluids. To prevent possible injury or exposure, avoid the Blade area.

Figure 12.142 Cap Piercer

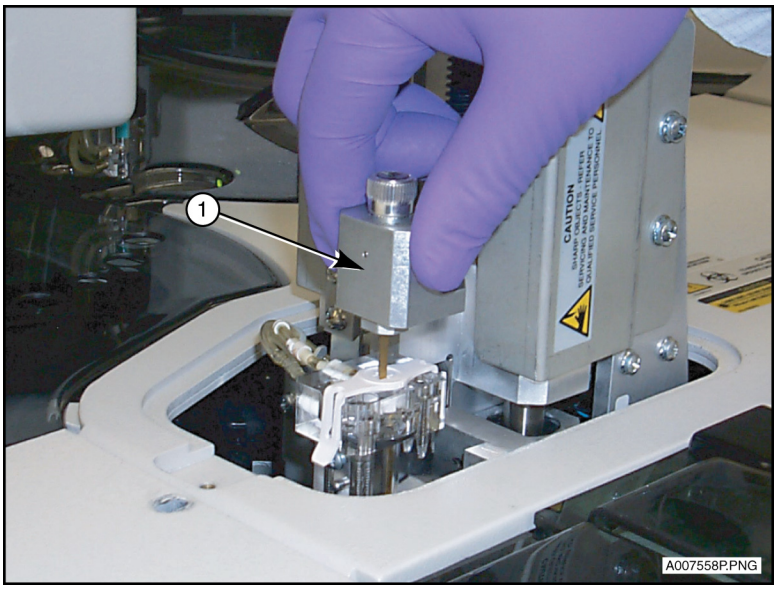

1. Blade Assembly

7 Put the Blade Assembly onto a plastic tray. DO NOT touch the Blade.

8 Remove the old Wick Clip Assembly (1) from Wash Tower (2) by lifting up on both sides of Wick Clip as shown in Figure 12.143. Make sure that the old Wick is retained within the Wick Clip. If the wick is NOT in the Wick Clip, the Wick should be found within the Wash Tower area. In this case, use tweezers to remove the Wick. Put the old Wick and Wick Clip into a biohazard waste container.

⚠ CAUTION

Observe all laboratory practices or procedures that pertain to handling of infectious and pathogenic materials.

Figure 12.143 Wick Clip Assembly

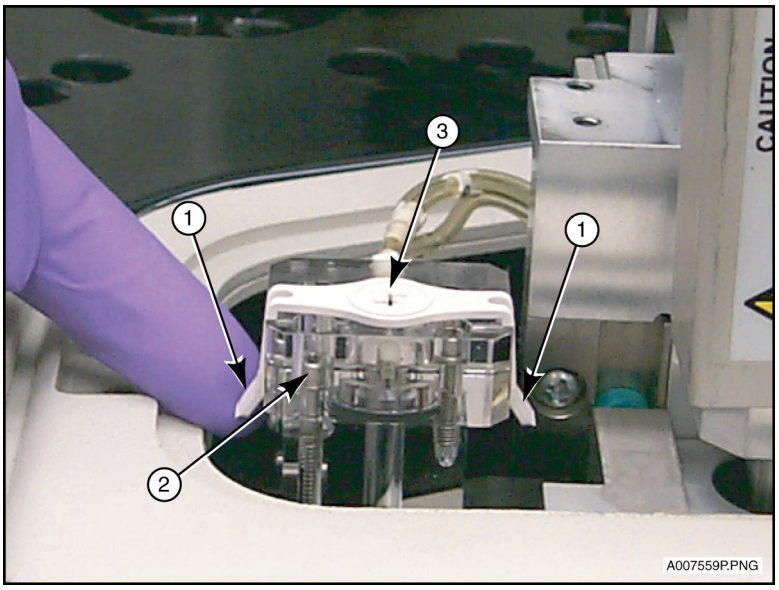

1. Wick Clip Assembly
2. Wash Tower
3. Blade Slots

Clean the Blade

It is recommended to clean the Blade at or near the instrument. If required, use the tray to carry blade/wick items to other locations. Clean the Blade as follows:

1 Refer to Figure 12.144. Rinse the Blade with hot water as shown.

⚠ CAUTION

The points on the end of the Blade are very sharp and have been exposed to potentially biohazardous fluids. To prevent possible injury or exposure, avoid the Blade area.

Figure 12.144 Cap Piercer Blade

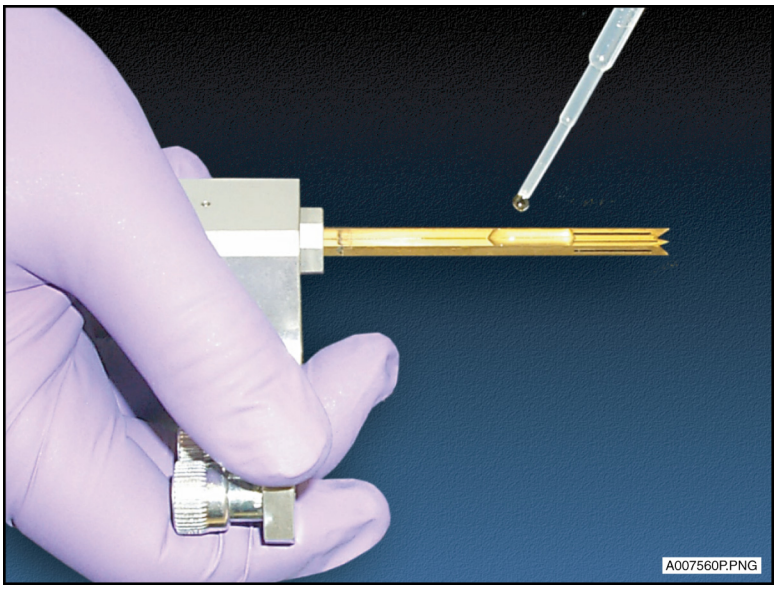

2 Refer to Figure 12.145. Wipe the Blade with a cotton-tip applicator as shown.

⚠ CAUTION

The points on the end of the Blade are very sharp and have been exposed to potentially biohazardous fluids. To prevent possible injury or exposure, avoid the Blade area.

Figure 12.145 Cap Piercer Blade

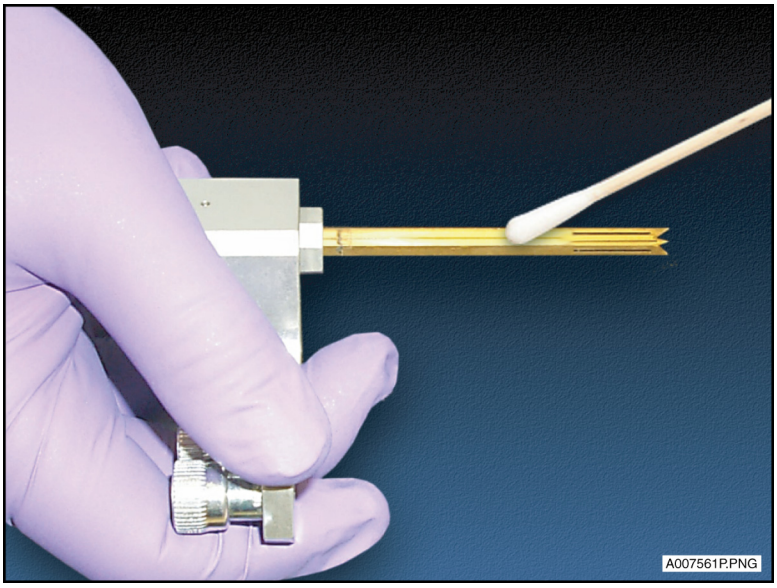

3 Put the Blade Assembly back on the same tray.

Lubricate the New Wick

It is recommended to lubricate the Wick at or near the instrument. If required, use the tray to carry blade/wick items to other locations. Refer to Figure 12.146 and perform the following procedure:

1 Remove a new Wick Clip Assembly (includes wick clip and wick) from package.

2 Put a piece of paper towel onto another tray. Put the new Wick Clip Assembly onto the paper towel.

3 Use a pipette (1) and apply 10 to 12 drops of Auto-Gloss Lubricant directly onto the Wick (2), or apply the drops until the Wick becomes saturated.

⚠ CAUTION

Be careful when handling Auto-Gloss lubricant. This lubricant is extremely slippery and difficult to clean from the floor.

Figure 12.146 Cap Piercer Wick

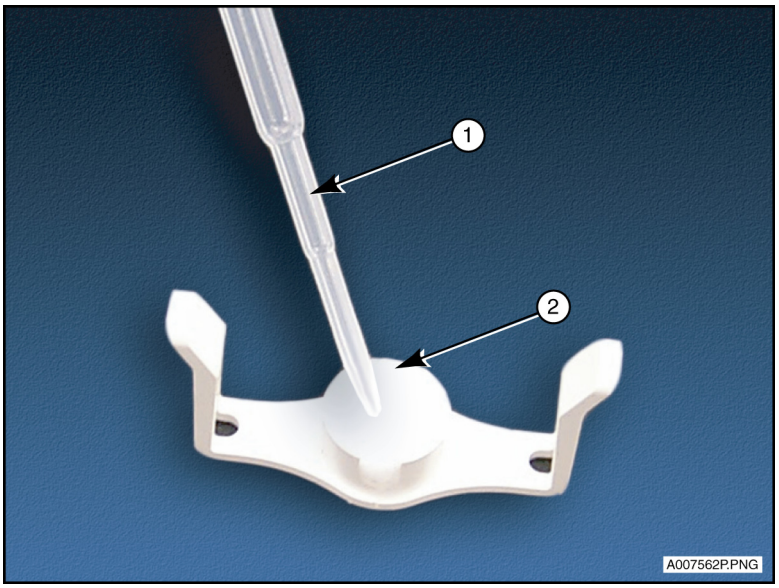

1. Pipette with Auto-Gloss Lubricant
2. Wick

Install the Wick Clip Assembly and Blade Assembly

1 Install Wick Clip Assembly (1) onto Wash Tower (2). Make sure both ends of the Wick Clip are secured. Refer to Figure 12.143.

2 Carefully pick up the Blade Assembly and orient end points of Blade with Slots (3) on Wick Clip. Slowly push the Blade Assembly straight down so that the Blade goes through the Wick, through the Wash Tower, and through the alignment slot at the bottom. Refer to Figure 12.143.

⚠ CAUTION

The points on the end of the Blade are very sharp and have been exposed to potentially biohazardous fluids. To prevent possible injury or exposure, avoid the Blade area.

3 Lift up the Blade Assembly again as shown in Figure 12.142. Put the Blade Assembly back on the plastic tray.

4 Remove the Wick Clip Assembly again as shown in Figure 12.143. Examine the bottom of Wick area for any loose fibers. Remove any loose fibers with scissors.

NOTE Loose fibers clog the drain.

5 Repeat Steps 1 and 2 above.

6 Align Blade Holder (2) to screw holes. Install and tighten the two Blade Holder Screws (1) with a screwdriver. Refer to Figure 12.141.

7 Install the Cap Piercer Cover (2). Tighten the two cover Screws (1) with a screwdriver. Refer to Figure 12.140.

8 After the Cap Piercer Cover is installed, select **Cancel** on the screen to retain the blade count since the Blade was not replaced. If **OK** is selected, the system resets the blade count to zero.

9 Select **Exit F10** to exit the Maintenance screen.

10 Place four sample tubes that are capped and empty into an appropriate sample rack.

11 Loosen the two Phillips screws on the cover of the DxC Load Area (Figure 9.2) and remove the cover. Place the rack into the DxC Load Area with no sample programming.

NOTE Do not load the rack into the UCTA Load Tray.

Loosen the screw and open the cover of the DxC Load Area **RUN** button (located to the right of the UCTA Load Tray). Press the DxC Load Area **RUN** button to pierce the tube caps. Inspect the bottom of each cap to confirm that the cap was pierced. Close the DxC Load Area **RUN** button cover and tighten the screw. Replace the DxC Load Area cover.

Replace ISE Drain Pump Tube

The ISE drain pump is an optional modification. The DxC system must be in *Standby*.

Materials Required:

- ISE Drain Pump Tube (PN A43830)

1 Select:

- **Utils** from the menu bar
- **2 Maintenance**
- **5 Hydropneumatic Maintenance**

2 Open the left door on the DxC. The ISE drain pump is located on the inside left wall.

⚠ CAUTION

BIOHAZARDOUS MATERIALS HAZARD. Observe all biohazard precautions when you perform maintenance, service, or troubleshoot the system. This includes, but may not be limited to, wearing gloves and eye shields and washing hands after working on contaminated portions of the system.

MOVING PARTS HAZARD. Do not place hands near any moving parts while the system is operating.

3 Refer to Figure 12.147.

- Lower the clear plastic cover (1).
- Disconnect both pump tube fittings (2 and 3), and move the tube out of both pinch clamps (4 and 5).
- Manually rotate the pump roller mechanism (6) approximately half a turn while removing the tube. Use caution as the tube may contain residual fluid.

Figure 12.147 ISE Drain Pump

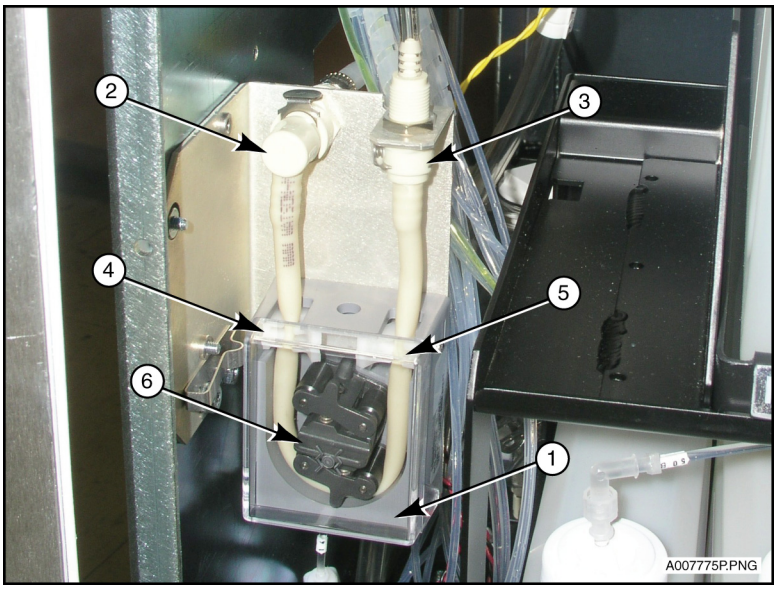

1. Plastic Cover
2. Pump Tube Fitting
3. Pump Tube Fitting
4. Pinch Clamp
5. Pinch Clamp
6. Pump Roller Mechanism

4 Discard the used tube in a biohazardous waste container.

5 Install a new ISE drain pump tube:

- Connect the tube to the tube fitting and route it through the pinch clamp on one side of the pump.
- Rotate the pump roller mechanism approximately half a turn while feeding the tube under the pump rollers.
- Route the tube through the second pinch clamp and attach it to the tube fitting on the other side of the pump.
- Close the plastic cover.

6 Verify that the tube is properly positioned under the pump rollers and is not twisted.

7 Select **Close** to exit the maintenance procedure and return the system to *Standby*.

8 Select **Exit F10**.

9 Select **1 Prime**.

10 Select:

- **All Hydropneumatic Subsystem** from the Prime dialog box.
- Type **5** in the **Number of primes to repeat** field.
- **Start Prime**.

11 As the ISE primes, check for leaks or bubbles from the tube or fittings, ISE waste draining, and the tube seated properly.

If you see a problem, select **Stop Prime**. Check the fitting connections or replace a damaged tube, starting again at Step 1 above.

12 Prime the ISE 20 times and watch for bubbles or leaks.

13 Select **Exit F10** to return to the Utilities screen.

Replace the UCTA Pick and Place Head

The UCTA Pick and Place Head may break as a result of motion errors. The motion error may be caused by misalignment of the Pick and Place Head. If the Pick and Place Head is broken, it must be replaced before processing new samples. Follow the procedure below to replace the Pick and Place Head. The DxI, UCTA and DxC must be in *Standby* to perform this procedure.

Materials Required:

- Pick and Place Head (Pick and Place Collett Assembly, PN 388668)
- 3/32” Allen Wrench
- Deionized water
- Lintless tissue

⚠ CAUTION

To prevent damage due to electrical static discharge (ESD), wear a wrist ground strap when you perform this procedure.

1 From the workstation console, select:

- **Utils** from the menu bar
- **4 Diagnostics**
- **Sample System** from the **Functional Area** list
- **UCTA Diagnostics** from the **Sub-Functional Area** list
- **1 Electro-Mechanical Test**

- **Devices** button
- **16 UCTA Pick and Place (Horizontal)**
- **4 Move to Transfer Shuttle**
- **OK**

---

2 The UCTA Pick and Place is located at the back of the UCTA, on the far side of the UCTA Pick and Place gantry. Loosen the captive screw on the Pick and Place cover (1) and swing the door to the left to access the UCTA Pick and Place.

Figure 12.148 Pick and Place Cover

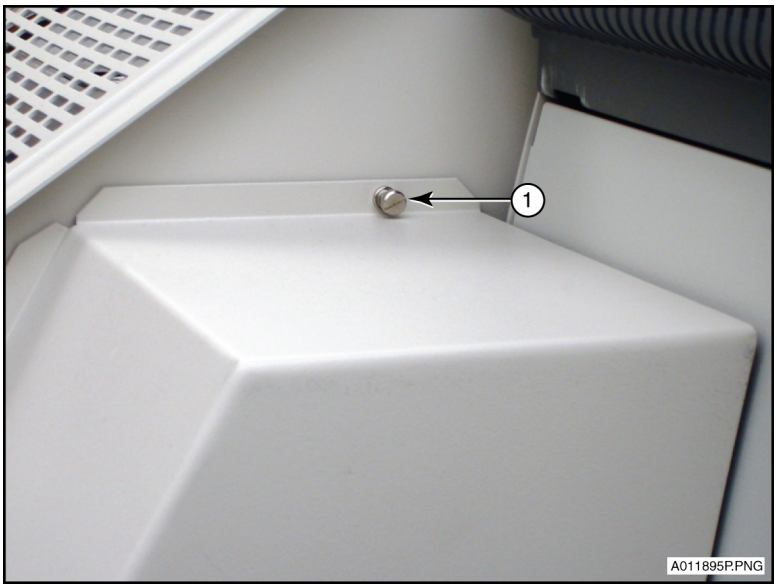

1. Captive Screw

Figure 12.149 Pick and Place Assembly

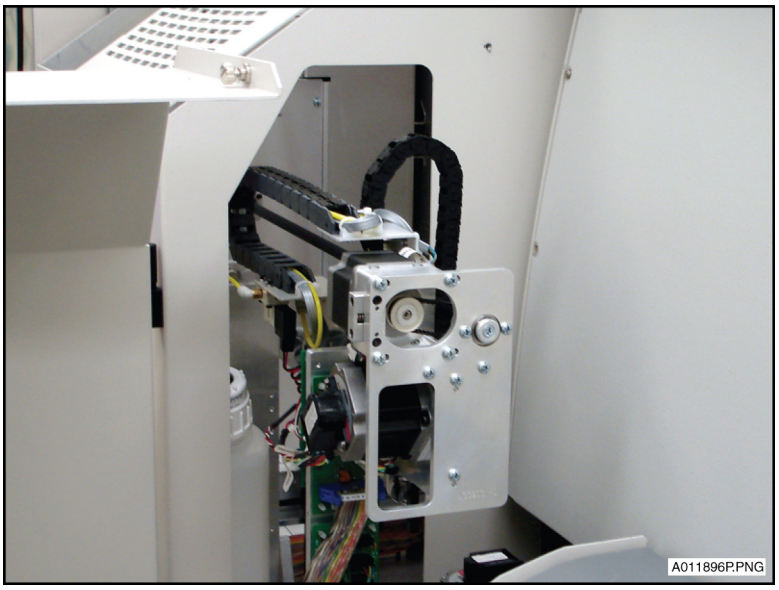

3 Use the 3/32” Allen wrench to remove the two Allen screws (1) on the holding plate (2).

NOTE Screws are not captive. Be careful not to lose the screws.

Figure 12.150 Pick and Place Holding Plate

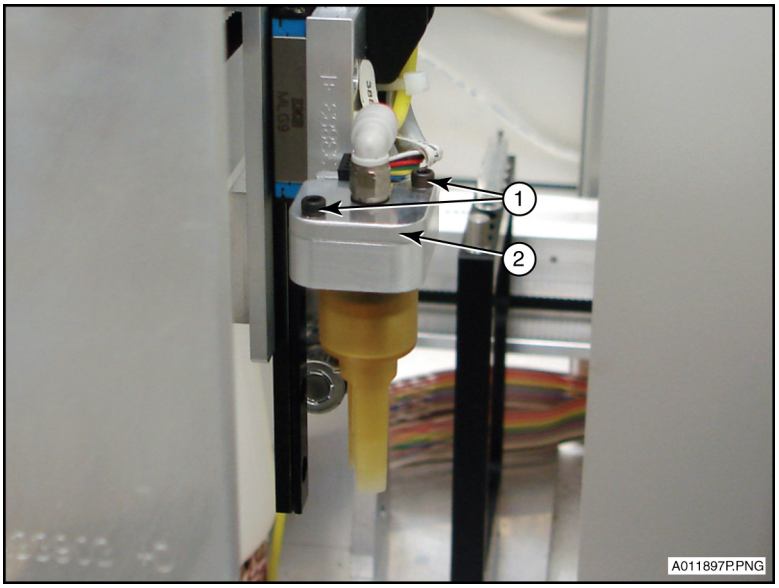

1. Allen Screws
2. Holding Plate

4 Lift the holding plate away from the crane arm.

Figure 12.151 Pick and Place Holding Plate

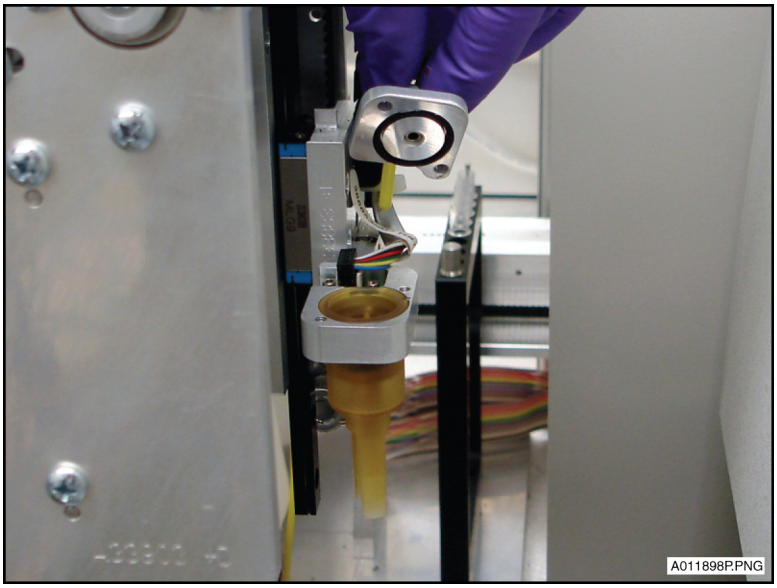

5 Remove the O-ring (1) from the holding plate.

Figure 12.152 Pick and Place Holding Plate

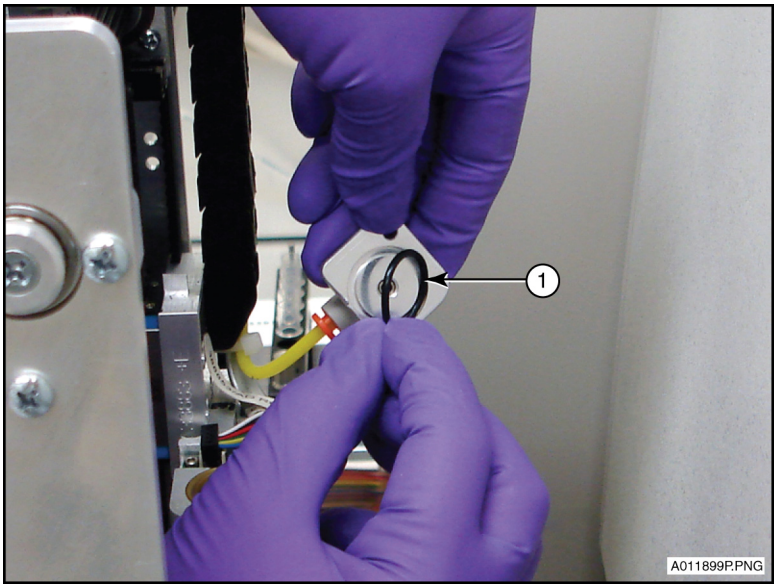

1. O-ring

6 Remove the broken Pick and Place Head (1) and replace it with a new one.

Figure 12.153 Pick and Place Head

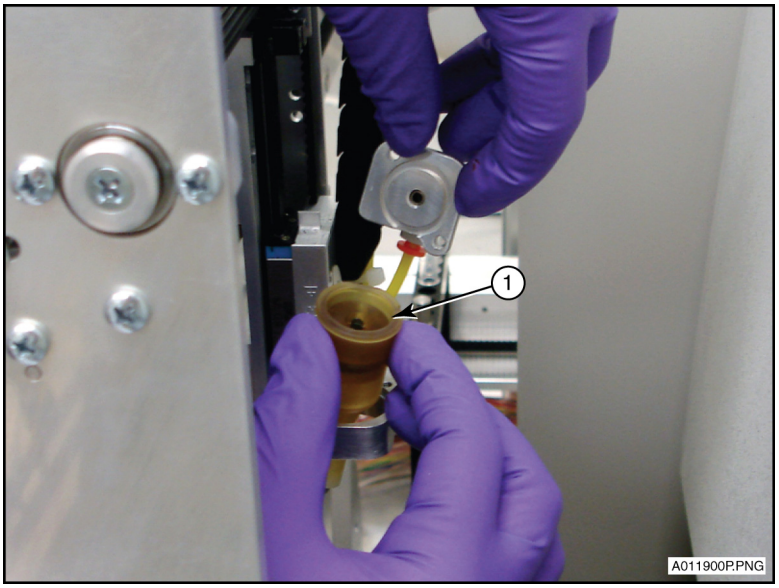

1. Pick and Place Head

7 Make sure the key on the Pick and Place Head locks into the key notch on the crane (1). The Pick and Place Head should be flush to the crane arm.

Figure 12.154 Pick and Place Crane

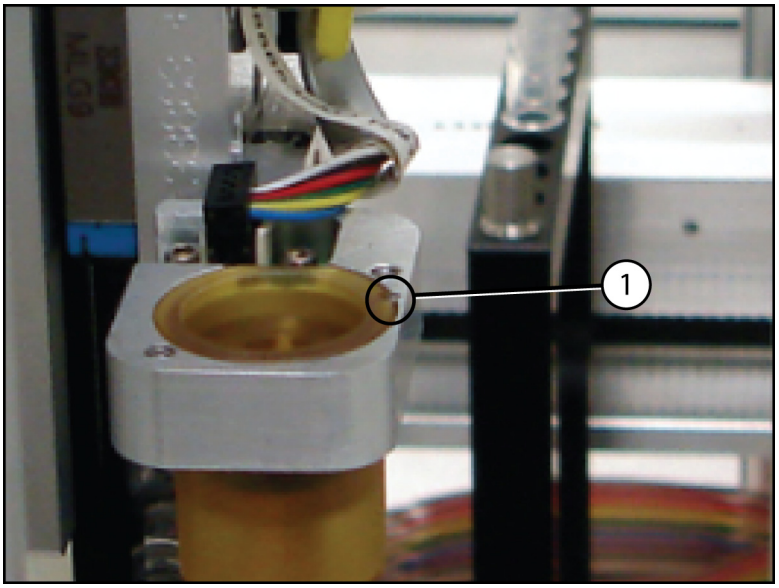

1. Key Notch

8 Rinse the O-ring with deionized water and dry with lintless tissue. Replace in the holding plate.

9 Position the holding plate onto the crane.

10 Replace the Allen screws. Tighten them securely.

11 Close the UCTA door and fasten the captive screw.

12 Select:

- **Cancel** from the UCTA Pick and Place (Horizontal) screen
- **Cancel** from the Devices screen,
- **Close** from the Electro-Mechanical screen
- **Exit F10** from the Diagnostics screen.

Clean the UCTA Left/Right Sample and Wash Syringes

Clean the UCTA sample and wash syringes as necessary to remove buildup.

The DxC, UCTA and DxC must be in *Standby*.

Materials Required:

- Cotton swabs
- Deionized water

1 Open the UCTA door and examine the syringes for residue at the top and bottom.

Figure 12.155 UCTA Syringes

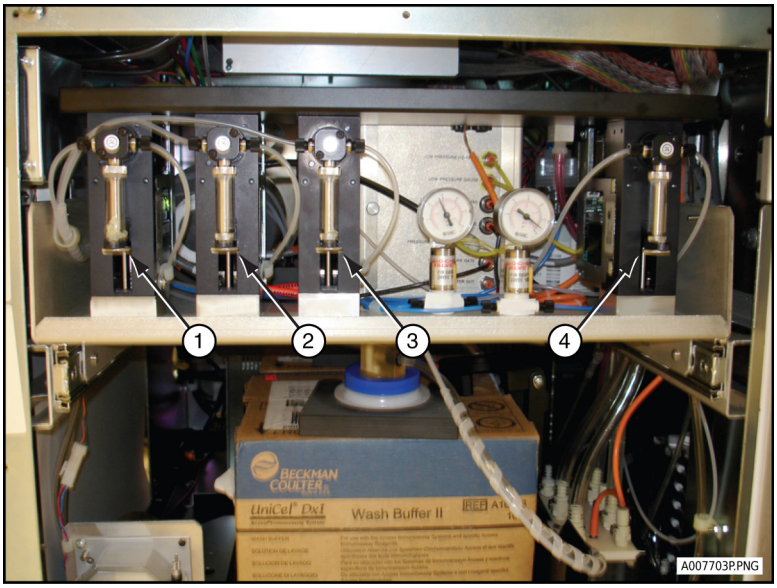

1. Left Sample Syringe
2. Right Sample Syringe
3. Left Wash Syringe
4. Right Wash Syringe

2 Use a cotton swab moistened with deionized water to remove residue.

3 Close the UCTA door.

Flush the UCTA Left/Right Aliquot Probes

Flush the UCTA Aliquot Probes only to remove clots or red cells blocking the inside of the probe. If gel is aspirated into the aliquot probe, the probe must be replaced.

The DxC, UCTA and DxC must be in *Standby*.

Materials Required:

- Probe Cleaning Tubing Assembly (PN A53944)
- Beaker of deionized water
- Syringe

⚠ CAUTION

To prevent damage due to electrical static discharge (ESD), wear the wrist ground strap when you perform this procedure.

1. Press the UCTA **STOP** button. The menu bar shows the UCTA status as *Stopped*.
2. Open the UCTA canopy.
3. Make sure the aliquot probe is over the wash station.

   If not, gently push the probe carriage until it is positioned over the wash station.
4. Remove the threaded fitting on top of the aliquot probe.
5. Connect the threaded fitting on the probe cleaning tubing assembly to the top of the aliquot probe.
6. Push the probe carriage all the way down into the wash station.

   NOTE Do NOT move the aliquot probe horizontally, to prevent bending the probe.
7. Fill the syringe with deionized water and attach the syringe to the free end of the probe cleaning tubing assembly.
8. Flush warm water through the probe to dislodge blood and clots. The probe may require more than one flushing.
9. Raise the probe and flush with the syringe again to verify that the fluid stream is straight, and there are no obstructions in the probe. If the fluid stream is still obstructed, replace the probe. See Replace the UCTA Aliquot Probes.
10. Remove the probe cleaning tubing assembly from the aliquot probe.
11. Reconnect the threaded fitting to the top of the aliquot probe. Tighten the fitting no more than finger tight.
12. Close the UCTA canopy.

13 Select:

- **Instr Cmd** from the menu bar,
- **1 Home**,
- **2 UCTA**.

The UCTA status changes to *Homing*.

14 When homing is complete, the UCTA status shows *Standby*.

15 Open the UCTA canopy.

16 Select:

- **Utils** from the menu bar
- **1 Prime**,
- **All UCTA Wash** and type **5** in the **Number of primes to repeat** field
- **Start Prime**

17 Check for leaks.

If leaks occur, repeat Steps 11-16 when priming stops.

18 When priming is complete, select **Exit F10**.

19 Close the UCTA canopy.

UCTA Accuracy PVT Procedure

Test Summary

The UCTA Accuracy PVT Procedure evaluates the performance of the UCTA Aliquot Probes and confirms that a consistent volume of fluid is aspirated and dispensed.

Perform this test at the workstation console.

Time Required

This test takes approximately 9 minutes to complete.

Materials Required:

- Three 13 x 75 mm Sample Racks
- Nine 13 x 75 mm sample tubes
- Calibrated pipette to deliver 70 µL or 500 µL
- Deionized (DI) water
- 5 mL syringe with a needle (if using closed tubes)
- Nine SVs

---

1 Dispense a minimum of 2.0 mL of DI water into each of nine 13 x 75 mm sample tubes.

- If you are verifying accuracy for closed tubes, fill the vacuum tubes with a syringe.
- If air bubbles form inside the tube, gently tap the side of the tube and allow enough time for bubbles to dissipate.

---

2 Make sure the DxC, UCTA and DxI System statuses are *Standby*.

---

3 Open the UCTA canopy.

---

4 Select **Utils** from the menu bar.

---

5 Select **6 PVT**.

---

6 Select **UCTA Performance Verification Tests** from the **Functional Area** pull-down menu.

---

7 Select **1 UCTA Accuracy**.

---

8 Follow the instructions on the screen. You must select whether you want to test the left or right probe, and whether you want to perform the 70 µL or the 500 µL test.

NOTE Default is the right probe.

---

9 Close the UCTA canopy and press **Start** on the screen to begin the UCTA Accuracy PVT procedure.

The first phase of the PVT procedure takes approximately 9 minutes as the system aliquots the necessary samples into sample vessels (SVs).

10 While the UCTA is processing the test SVs:

- Prepare an SV filled with the same amount of deionized (DI) water (70 µL or 500 µL) as you selected for the test. You will use this SV to compare to the test SVs.

NOTE When the UCTA finishes aliquoting the samples into the appropriate SVs, the system displays a new screen for the next phase of the PVT procedure.

11 When the PVT Recovery screen appears, open the UCTA canopy.

12 Follow the instructions on the screen.

- If the meniscus of fluid in the Test SV is the same as or ABOVE the meniscus of the appropriate comparison SV,
  - The UCTA accuracy is acceptable.
- If the volume of any TEST SV is less than the comparison SV,
  - Troubleshoot by performing the following steps:
    - Make sure the UCTA Aliquot Probe is not obstructed.
    - Make sure the fittings and connections are tight on the UCTA Aliquot Probe and the UCTA Obstruction Detection and Correction (ODC) assembly.
    - Make sure the UCTA syringes are functioning properly, and that the fittings and connections are secure.
    - Make sure the UCTA Aliquot Probe, UCTA ODC assembly, and UCTA syringe tubings are clear of blockages.

If you need additional assistance, contact Beckman Coulter Technical Support.

13 Close the UCTA canopy.

14 Repeat the Accuracy test for both probes and both fluid levels, if necessary.

15 When you have completed the tests, select **Close** on the PVT Recovery screen and select **Exit F10** to exit the Performance Verification screen.

Obstruction Detection and Correction (ODC)

Obstruction Detection and Correction detects the difference between a normal fluid sample and a clotted sample on the UCTA unit and the DxC analyzer. When the system aspirates a sample, it measures the pressure. If the pressure exceeds the normal range, it flags the sample.

The system applies Obstruction Detection to every sample container. If the sample container holds insufficient volume for the requested tests, the probe may get too close to the bottom of the container and cause Obstruction Detection messages.

If the UCTA detects a complete blockage of an aliquot probe, it shows an Obstruction Detection message indicating the rack and sample involved and continues processing with the other aliquot probe. The message: "*UCTA: A UCTA Sample Probe is Obstructed: DO NOT Home the UCTA before manually clearing the obstruction from the probe. 0x08000805*" indicates that the UCTA ODC requires operator intervention. Remove the ODC error at the earliest convenience.

Clear an Obstruction Detection Error at the UCTA

1. Verify that the UCTA is *Stopped*. If not, press the UCTA **STOP** button.

2. Follow the procedure for flushing the UCTA aliquot probe. See Flush the UCTA Left/Right Aliquot Probes.

⚠ CAUTION

The procedure for flushing the UCTA probe is not recommended for removing gel from the aliquot probe. If gel is present, or if the clot cannot be removed, replace the probe.

3. When you have removed the obstruction, inspect the samples for clots. Remove any clots.

4. Load the samples onto the UCTA load tray and press **RUN** to process the samples.

   IMPORTANT DO NOT remove any aliquotted SVs. The UCTA will mark the SVs for discard during the homing operation.

When an Obstruction on Both Aliquot Probes Cannot be Cleared

If both aliquot probes are obstructed, and the obstructions cannot be removed, use the following procedure to unload the racks from the UCTA sample carousel.

⚠ CAUTION

You must perform Steps 1-8 of this procedure before you unload racks from the UCTA sample carousel.

Required Materials:

- Two UCTA Probe Cleaner Tubes.
- Lint-free tissue.
- Beaker

---

1 Verify that the UCTA is *Stopped*. If not, press the UCTA **STOP** button.

---

2 Open the door below the UCTA, and locate the left and right sample syringe, as required.

Figure 12.156 UCTA Syringes

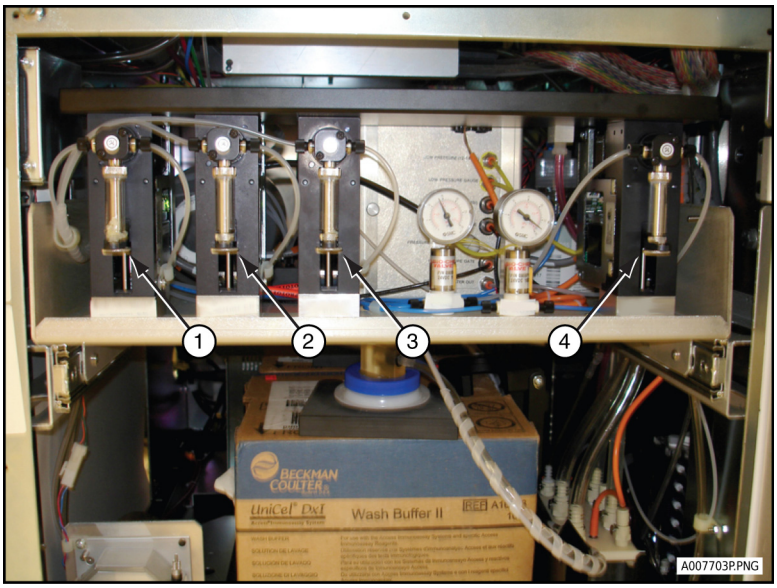

1. Left Sample Syringe
2. Right Sample Syringe
3. Left Wash Syringe
4. Right Wash Syringe

---

3 Unscrew the threaded fitting on the right side of the valve at the top of a sample syringe. Place the removed fitting and tubing in a beaker to catch dripping fluid. Use lint-free tissue to clean any spilled fluid.

4 Connect the black fitting of the UCTA Probe Cleaner Tube to the right side of the valve at the top of the sample syringe. Place the open end of the tube in the beaker.

5 Repeat Steps 3-4 for the remaining sample syringe.

6 Close the UCTA canopy and *Home* the UCTA.

7 When the UCTA is at *Standby*, remove the UCTA Probe Cleaner Tube from the first sample syringe and securely reattach the threaded fitting for the sample syringe. Tighten the fitting until you hear a click.

8 Repeat Step 7 for the remaining sample syringe.

9 Remove all racks from the UCTA Load Tray.

10 To remove the racks on the UCTA sample carousel, select:

- **Instr Cmd** from the menu bar
- **8 Unload All Racks**
- **2 UCTA**
- If you are unable to unload the racks, call Beckman Coulter Technical Support.

11 To continue sample processing, refer to the UCTA is Non-operational procedure in CHAPTER 9, *Independent Mode*.

Clean UCTA Waste Sump Exterior

Clean the exterior of the UCTA waste sump to remove buildup around the edges of the tank lid.

1 Open the UCTA door. The waste sump is mounted on the bottom right side of the chamber.

Figure 12.157 UCTA Waste Sump

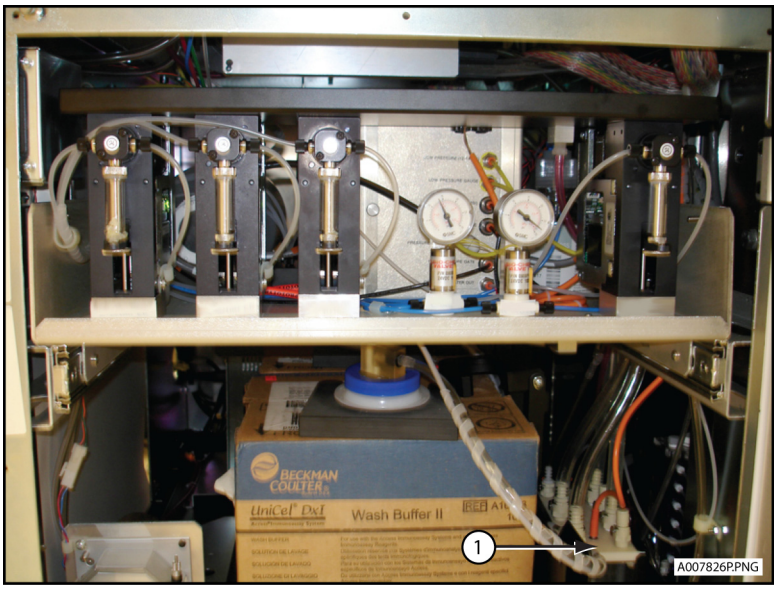

1. Waste Sump

2 Use a paper towel moistened with DI water to clean under the edge of the waste sump top.

3 Close the UCTA door.

ISE Service

Select this option to perform Electrode Maintenance/Drain or Sample Dilution Cup (SDC) Maintenance.

CHAPTER 13

Troubleshooting Calibration and Result Errors

Calibration Errors

Introduction

NOTE These reports apply to the DxC analyzer only. Refer to the DxI Online Help For DxI calibration and result errors.

The following pages contain descriptions of calibration reports for linear, non-linear, electrolyte module, and cup module chemistries and explanations of what each field on the report is used for when calibrating each chemistry type.

Calibration Error Checking

Calibration and Result Error checking is used to flag system and reagent issues. Error checking is performed on the final result and on interim steps of the reaction. The error flags may be directed to a calculated calibration factor or to any of the interim data used to generate a final calibration result. The flags may be indicative of a variety of different hardware, reagent, or sample (calibrator) issues and can be used to troubleshoot different system issues. Any calibrator or sample outside of any one or more calibration limits will be flagged.

Calibration Error Flags

Table 13.1 below is a general list of the calibration errors for linear, multipoint, and MC calibrations. These errors are listed in the "Failed Calibration Report" area of the calibration report. Descriptions of each of the calibration error flags are listed, in more detail, by calibration type in the following sections.

Table 13.1 Calibration Error and Remarks

Printed Flag	Remarks on Report	Description
BACK TO BACK	Calibration failed	Precision error.
CAL FAILED	Calibration failed	Calibration failed.
CHEM DB ERROR		Chemistry database error.
HI REAGENT		High reagent level.

Table 13.1 Calibration Error and Remarks *(Continued)*

Printed Flag	Remarks on Report	Description
LO REAGENT		Low reagent level.
MATH ERR	Calibration required	Math error – Calibration does not fit expected model.
NO SAMP DETECT		No sample detected.
OCR HIGH	Calibration failed	Response out of range high.
OCR LOW	Calibration failed	Response out of range low.
RECOVERY	Calibration failed	Recovery error
SENSITIVITY	Calibration failed	Sensitivity error
SEV RECOVERY	Calibration required	Severe recovery error
SEV SENSITVITY	Calibration required	Severe sensitivity error
SPAN	Calibration failed	Sensitivity error
RANGE	Calibration failed	Accuracy error (ISE)

MC Calibration

Overview

The DxC calibrates MC chemistries using two or three calibrator levels. Four replicates are assayed per calibrator level. Of the four replicates, only the two middle values are used to set calibration. The highest and lowest values are discarded. The analog signals generated by the calibrator measurements are converted to digital form (ADC values). The resulting ADC values are compared to pre programmed error limits for back-to-back, span, and calibrator range to determine the integrity of the calibration.

MC Calibration Checks

Both results and interim data are error checked when calibrating a chemistry. Standard results errors, as well as interim error flags, are applied to the calibration data.

Back-to-Back

- The back-to-back error check is a measure of system precision during calibration.
- A back-to-back value is the difference between the two middle Sample-Reference replicate values within a calibration level. If the back-to-back limit is exceeded the calibration fails.
- Only the two replicates that meet back-to-back are used; all other replicates are discarded.
- Select Calibrator Acceptance Limits under Options in the **Rgts/Cal** screen to view current calibration limits.

Calibrator Range (High/Low)

- The Calibrator Range (High/Low) error check is a measure of reagent and electrode performance or accuracy.
- Calibrator ADC values are compared to acceptable ranges for calibrator values. Calibration fails if the calibrator ADC values fall outside the acceptable calibrator limits.
- Select Calibrator Acceptance Limits under Options in the **Rgts**/**Cal** screen to view current calibration limits.

DAC

- The DAC error check verifies proper operation of electrodes.
- The Digital-to-Analog Conversion (DAC) check mimics expected ranges of electrode output. Failure to detect an output within a predetermined range for each channel will trigger a DAC ERROR flag for the specific electrolyte.
- Limits are as shown in Table 13.2.

Table 13.2 Digital-to-Analog Conversion (DAC) Check Limits

Chemistry	DAC Limits	
	Low	High
NA	400	5,400
K	-5,900	-900
CL	-2,300	2,700
CO2	-30,000	-20,000
CALC	-125	4,875

Sample/Reference Deviation

- The Sample and Reference deviation error checks are used as a measure of noise for electrolytes.
- Each Sample ADC and each Reference ADC is actually an average of ten readings.
- The difference between the high and low values (deviation) of the ten electrode readings (taken milliseconds apart) must be within the maximum deviation.
- Maximum deviations are as shown in Table 13.3 below:

Table 13.3 Maximum Allowable Sample/Reference Deviations by Chemistry

Chemistry	Maximum Deviations	
	Sample	Reference
NA	200	200
K	150	150
CL	200	200
CALC	150	150

Span

- Span is a measure of sensitivity and verifies that two consecutive calibrator level ADC values are a minimum distance apart.
- The difference between the average ADC value of Calibrator 1 and the average ADC value of Calibrator 2 or between the average ADC value of Calibrator 2 and the average ADC value of Calibrator 3 must exceed the minimum span limit.
- Select Calibrator Acceptance Limits under Options in the **Rgts/Cal** screen to view current calibration limits.

Calibration Reports

The Calibration Report can be a useful tool for identifying issues. Table 13.4 below defines the Fields in the order they are shown for each chemistry on a typical ISE Module Calibration Report.

Table 13.4 ISE Module Calibration Report Field Definitions

Field	Description
Sample Reference	The difference between the sample and reference ADC values. This is used for the back-to-back, range, and span checks. For CO_2, the sample reference value is the ratio between the sample and reference readings.
Sample	The average of eight ADC readings of the calibrator sample. For CO_2, the sample ADC represents the rate of pH change initiated by the calibrator sample.

Table 13.4 ISE Module Calibration Report Field Definitions *(Continued)*

Field	Description
Sample Deviation	Each sample ADC is actually an average of eight readings. The ADC difference between the minimum and maximum readings must be less than the predefined limits a noise flag will occur. This does not apply to CO_2.
Reference	The average of the eight ADC readings corresponding to the measurement of the Electrolyte Reference Solution. For CO_2, the reference ADC represents the rate of pH change initiated by the reference reagent.
Reference Deviation	Each reference ADC is actually an average of eight readings. The ADC difference between the minimum and maximum readings must be less than the predefined limits, otherwise a noise flag will occur.
Span	The difference between the average of the Sample-Reference values reported for each calibrator level. The value is compared to an expected value and if the calculated span is less than the expected span, the calibration is flagged.
Set Point	The concentration value assigned to the calibrator level.
Set Point Units	The units assigned to the set point value.
Replicates Used	The field indicating which replicate of a calibrator level is used for a particular chemistry.
Failed Calibration Log (ERR)	The fields listed below categorize information about a failed calibration. Multiple errors are shown here for any chemistry failure. The errors should correlate with any of the asterisked (*) fields listed within the calibration report. This section of the report appears only when a calibration fails. • **Reagent** – Identifies the failed chemistry. • **Level** – Identifies the calibrator level which failed. • **Condition** – In the event that an error occurs, an asterisk (*) appears next to the value which is out of specification. The corresponding error flag will print in this field. Only those errors that FAIL the calibration will print.

Table 13.5 below defines the Fields in the order they appear for each chemistry on a typical MC Calibration Report.

Table 13.5 Cup Module Calibration Report Field Definitions

Field	Description
Rate	Represents the rate of change in ADCs during the reaction. Rate is used for back-to-back, span and range checks.
Initial Read	Represents the conductance measured by the electrode or absorbance measured by detector with only reagent present in the cup.
Final Read	Represents the conductance measured by the electrode or absorbance measured by detector after the reaction has taken place.
Set Point	The value assigned to the calibrator level.
Set Point Units	The units assigned to the set point value.
Replicates Used	The field indicating which two of the four calibrator replicates are used for a particular chemistry.
Span	The difference between the average of the values reported for rate for each calibrator level. This value is compared to an expected value; if the calculated span is less than the expected span, the calibration is flagged.
Failed Calibration Log (ERR)	The fields listed below categorize information about a failed calibration. Multiple errors are shown here for any chemistry failure. The errors should correlate with any of the asterisked (*) fields listed within the calibration report. This section of the report appears only when a calibration fails. • **Reagent** – Identifies the failed chemistry. • **Level** – Identifies the calibrator level which failed. • **Condition** – In the event that an error occurs, an asterisk (*) appears next to the value which is out of specification. The corresponding error flag prints in this field. Only those errors that FAIL the calibration prints.

Linear Calibration

Overview

For all linear photometric chemistries, the UniCel DxC sets calibration based on two or four calibrator replicates.

- For calibrations using four replicates, the instrument will determine and discard the highest and lowest values of the four replicates. The remaining two values are called the usable calibrator replicates. Only the two usable replicates will be used for the calibration calculations. The average value of the usable calibrator replicates is used to determine the calibration factor.
- For calibrations using only two replicates, the instrument uses the average of both replicates in determining the calibration factor.

Calibration fails if one or more of the usable replicates is flagged.

Linear calibration chemistries include Endpoint and First Order reactions. For additional information about linear calibration or for specific calibration equations, refer to CHAPTER 11, *System Reference*, Endpoint and First-Order Chemistries and Endpoint and First-Order Calibration Formulas.

Calibration flags that are specific to the linear photometric chemistries, causing the reagent to fail its calibration, are back-to-back and Calibrator Range (High/Low) errors, and for linear chemistries that use more than one calibrator, Span.

To view the calibration flag limits for all calibrated chemistries, access View Calibrator Acceptance Limits in the **Rgts/Cal** screen under **Options**. Calibration flags for any chemistry with loaded calibration data are available to view and print.

Back-to-Back

- A back-to-back error check is a measure of system precision during calibration.
- A back-to-back value is the difference between the two usable replicate values. If the back-to-back limit is exceeded the calibration fails.
- Limits are either pre-programmed in the system chemistry database or downloaded from disk before calibration.

Calibrator Range (High/Low)

- Calibrator Range (High/Low) error check is a measure of reagent performance or accuracy.
- Calibrator ADC values are compared to acceptable ranges for calibrator values. Calibration fails if the calibrator ADC values fall outside the acceptable calibrator limits.

Span

- Span is a measure of the sensitivity of the reagent and verifies that two consecutive calibrator levels values are a minimum distance apart.
- The difference between two consecutive calibrator rates or absorbances must exceed the minimum limit or the reagent fails calibration.

Linear Calibration Report

The calibration report can be a useful tool for identifying issues. Table 13.6 below defines the fields in the order they appear for each chemistry on a typical Linear Calibration Report.

Table 13.6 CC Linear Calibration Report Field Descriptions

Field	Description
Reagent Identifiers	The following fields identify specific cartridge information. • **Rgt** – Indicates which chemistry is being calibrated. • **Units** – Selected units shown for reference. • **S/N** – Specifies the serial number of the reagent cartridge being calibrated. • **Lot** – Identifies the lot number of the specific cartridge. • **Loc** – Identifies the location of the reagent cartridge on the reagent carousel.
Cuv	The cuvette number on the reaction carousel in which the reaction took place.
Set Points	The target value for the calibrator.
Blank	The blank absorbance when it is an ENDPOINT chemistry or the blank rate (absorbance per unit time) when it is a RATE chemistry.
Reaction	The reaction absorbance when it is an ENDPOINT chemistry or the reaction rate (absorbance per unit time) when it is a RATE chemistry. For ENDPOINT 2 or RATE 2 reactions, the blank absorbance or blank rate must be subtracted from this value to obtain the net delta absorbance. The calibration is calculated using the two middle reaction values; the highest and lowest values are not used. Back-to-back error checking is performed on the mid reaction values.
Recovery	The value obtained when the final absorbance of each of the replicates used is multiplied by the determined Calibration Factor. This is the value that would be obtained if the calibrator was run as a sample using this calibration. The closer the recovery of the calibrator is to the setpoint, the better the calibration is.
Calibration Error Log	The fields listed below categorize information about a failed calibration. Multiple errors are shown here for any chemistry failure. The errors should correlate with any of the asterisked (*) fields listed within the calibration report. This section of the report appears only when a calibration fails. • **Reagent** – Identifies the failed chemistry. • **Lot Number** – Identifies the lot number of the reagent which failed calibration. • **Serial Number (S/N)** – Identifies the serial number of the specific cartridge which failed. • **Cuvette** – Identifies the cuvette in which the specific replicate failed. • **Condition** – In the event that an error occurs, an asterisk (*) appears next to the value which is out of specification. The corresponding error flag will print in this field. Only those errors that FAIL the calibration will print. • **Value** – Shows the absorbance value that failed calibrator or reaction limits. • **Magnitude** – This is an indication of the severity of the failure. Depending on the error, the magnitude may reflect the actual value of the error or it may show the absolute difference between the limit and the actual value. Likewise, the magnitude may not be applicable to the error which has occurred. If this is the case, no value will appear under this field.

Table 13.6 CC Linear Calibration Report Field Descriptions *(Continued)*

Field	Description
	<table><tr><th>Error Flag</th><th>Magnitude</th></tr><tr><td>BLANK RATE</td><td>absolute delta</td></tr><tr><td>BLANK ABS</td><td>absolute delta</td></tr><tr><td>RXN RATE</td><td>absolute delta</td></tr><tr><td>RXN ABS</td><td>absolute delta</td></tr><tr><td>INIT ABS HI</td><td>actual value</td></tr><tr><td>INIT RATE HI</td><td>actual value</td></tr><tr><td>BACK TO BACK</td><td>absolute delta</td></tr><tr><td>OCR</td><td>absolute delta</td></tr><tr><td>All others</td><td>no magnitude</td></tr></table>

Non-Linear and Multipoint Calibrations

Overview

Non-linear chemistries include drugs and specific protein assays. The calibration curves for non-linear calibrations are logarithmic or have other non-linear relationships.

Non-linear chemistry calibrations may have single level or multilevel calibrators.

- Multipoint calibrations are based on a single determination of each calibrator level (five or six levels). The standard curve is determined by use of one of several non-linear math models.
- Single point non-linear calibrations are based on one or two levels of calibrators. These chemistries set calibration based on two to four replicates of each calibrator level.

Failed Multipoint calibration errors will be noted with an (*) at the bottom of the calibration report.

Refer to CHAPTER 11, *System Reference*, Non-Linear Chemistries and Non-Linear Calibration Formulas for additional information on this subject.

Non-Linear Calibration Checks

Non-linear calibrations have a set of calibration checks specific to non-linear calibrations.

- The first check determines whether the data is reasonable to attempt the curve fitting.
- The second check determines whether the Multipoint span is within acceptable limits.

The next set of errors are inherent to non-linear curve fitting and may or may not cause calibration failure. Under certain conditions the curve fitting will produce parameters and curves that may contain mathematical errors. Typically these errors occur outside of the reagent dynamic range and have no effect on sample recovery. Math errors may be either overrideable or non-overrideable depending on the severity of the failure. Math errors are reported as “MATH ERROR #” with the number associated with a specific error that has occurred.

Multipoint Span

- The Multipoint Span flag is a measure of sensitivity over the entire standard curve.
- This is the difference between consecutive calibrator rates or absorbencies. There can be up to six Multipoint spans for Level 0-1, 1-2, 2-3, 3-4, 4-5, 5-0.

Recovery

The Recovery Flag determines whether recovery errors for each calibration level are too large for a calibration to be useful. The difference between the recovered concentration and the actual concentration exceeds specification. This error is overrideable.

Severe Recovery

Severe Recovery is a non-overrideable extreme recovery error. Refer to RECOVERY error.

Sensitivity

Sensitivity is a check of the calibration slope for each calibrator level and several intermediate levels to check if the response is too high or low. This error is overrideable.

Severe Sensitivity

Severe Sensitivity is a non-overrideable extreme sensitivity error. Refer to SENSITIVITY error.

Math Errors

These errors occur when the calibration graph is being established and the curve is being fit to a specific non-linear curve model. Also, there is a math error with a single point non-linear curve to show that the scale factor obtained during calibration is too far from the expected scale factor.

Calibration Report

The CC Non-Linear and Multipoint Calibration Reports can be a useful tool for identifying issues. Table 13.7 below provides definitions of specific calibration fields found on those two reports.

Table 13.7 Non-Linear Single Point and Multipoint Calibration Reports Field Definitions

Field	Description
Reagent Identifiers	The following fields identify specific cartridge information. • **Rgt** – Indicates which chemistry is being calibrated. • **Units** – Shows selected units for reference. • **S/N** – Specifies the serial number of the reagent cartridge being calibrated. • **Lot** – Identifies the lot number of the specific cartridge. • **Loc** – Identifies the location of the reagent cartridge on the reagent carousel. • **Math Model** – Identifies the specific Math Model used to calculate the curve parameters.
Cuv	The cuvette number on the reaction carousel in which the reaction took place.
Level	The level of calibrator being run.
Set Points	The target concentration value for the calibrator level.
Blank	The blank absorbance when it is an ENDPOINT chemistry or the blank rate (absorbance per unit time) when it is a RATE chemistry.
Reaction	The reaction absorbance when it is an ENDPOINT chemistry or the reaction rate (absorbance per unit time) when it is a RATE chemistry. For ENDPOINT 2 or RATE 2 reactions, the blank absorbance or blank rate must be subtracted from this value to obtain the net delta absorbance.
Recovery	The concentration obtained when the final calibrator absorbencies are applied to the calculated curve.
Deviation	The difference between the obtained absorbance value and the curve in terms of absorbance.
Standard Deviation of the Curve	The standard deviation of all the calculated deviation values. An indication of curve fit.
Curve Parameters	(R_0, K_c, R, Conc, a, b, c) Positioning and scaling factors for curve determination. • **R_0** – Calculated response for a zero sample • **K_c** – Scale parameter • **R** – Sample Response • **Conc** – Standard • **a, b, c** – Parameters which define the non-linear elements of the math model

Table 13.7 Non-Linear Single Point and Multipoint Calibration Reports Field Definitions *(Continued)*

Field	Description
Calibration Error Log	Several fields are shown for information on a failed calibration. Multiple errors are shown here for any chemistry failure. The errors correlate with the fields with asterisks, listed in the calibration report. This is only shown if a calibration fails. • **Reagent** – Identifies the failed chemistry. • **Lot Number** – Identifies the lot number of the reagent which failed calibration. • **Serial Number (S/N)** – Identifies the serial number of the specific cartridge which failed. • **Cuvette** – Identifies the cuvette in which the specific replicate failed. • **Condition** – In the event that an error occurred, an asterisk (*) appears next to the value which is out of specification. The corresponding error flag will be printed in this field. Only those errors that FAIL the calibration will be printed. • **Value** – Shows the value of the absorbance data which failed calibrator or reaction limits. • **Magnitude** – An indication of the severity of the failure. Depending on the error, the magnitude may reflect the actual value of the error or it may show the absolute difference between the limit and the actual value. Likewise, the magnitude may not be applicable to the error which has occurred. If this is the case, no value will appear under this field.

Error Flag	Magnitude
BLANK RATE	absolute delta
BLANK ABS	absolute delta
RXN RATE	absolute delta
RXN ABS	absolute delta
INIT ABS HI	actual value
INIT RATE HI	actual value
SPAN	absolute delta
All others	no magnitude

Troubleshooting Result Errors

Result Errors

Introduction

All reactions are checked against chemistry parameter flag limits (for example, absorbance limits, reference ranges) to qualify the reagent, calibration, or sample. Checks are performed against the final result and on interim reaction data for all samples, including calibrators. Any calibrator or sample result or reaction step performing outside of any one or more limits will be flagged (message or remark). A flagged sample value will not be reported.

Error Types and Description

Result Errors and Codes describe the errors or system conditions which affect chemistry results. The conditions are described in Table 13.8 below.

Table 13.8 Error Type and Description

Error Type	Description
Error appeared in Result Column on report	Indicates a result issue, result condition, or suppressed result.
Error condition appeared in Remarks column on report	Indicates the reason for suppressed results or a condition associated with the result, like reference ranges.
Host Code	Host codes are transmitted to the Host with the result in question. These codes may be translated by the Host into error messages to be printed with the Host report. These codes are not printed on the report.
Instrument Code	Instrument Codes are coupled with a chemistry code and indicate a condition tied to a specific chemistry. These codes are printed on the report in the Instrument Code section. *Example:* 01AC translates to Sodium (01A) Calibration Overridden (C). Some of these conditions will prevent the printing of a result. **IMPORTANT** These codes are not located or transmitted anywhere other than the **Instrument Code** field on the DxC printed report.

Error Codes and Definitions

Result Errors and Codes

Result errors and codes are printed on the report. Table 13.9 below provides descriptions of those codes.

Table 13.9 Result Errors and Codes

Result Displayed on Report	Printed in Remarks Area	Host Code	Inst. Code	Description
"Result Printed"			D	Reagent Days exceeded
"Result Printed"			C	Calibration overridden
"Result Printed"			E	Calibration time extended
"Result Printed"			J	Slope offset adjustment
"Result Printed"			M	Set point modification
"Result Printed"			R	Reagent Expired
"Result Printed"			V	Rerun result
"Result Printed"			O	ORDAC result
"Result Printed"			P	Default Panel
"Result Printed"		OK		Calculation completed
"Result Printed"	CRITICAL HIGH			Exceeds Critical range high
"Result Printed"	CRITICAL LOW			Exceeds Critical range low
"Result Printed"	HIGH			Exceeds reference range high
"Result Printed"	LOW			Exceeds reference range low
"Result Printed"	TEMP ERR	TM	T	Temperature error
<X (X=lower inst range)		LT		Less than X - OIR LO
<X (X=lower reportable range)		LT		Less than X - ORR LO
>Y (Y=upper inst range)		GT		Greater than Y - OIR HI
>Y (Y=upper reportable range)		GT		Greater than Y - ORR HI
CAL FAILED				Calibration failed
CAL TIMED OUT				Calibration timed out
CHEM ABORTED				Too many retries
CHEM BYPASSED				Channel bypassed
CHEM NEEDS CAL				Chemistry needs calibration
CHEM NOT RUN				Chemistry not run
DAC ERROR				ISE DAC Failure
DIL1 LEV SENSE				Level sense error in diluent cartridge

Table 13.9 Result Errors and Codes *(Continued)*

Result Displayed on Report	Printed in Remarks Area	Host Code	Inst. Code	Description
DIVISION ERROR		ZD		Division Error Special calculation divisor is zero
HI REAGENT				MC reagent level high
INCOMPLETE		AB		Calculation incomplete
INSUFF DIL1				Insufficient diluent reagent for scheduled tests
INSUFF REAG				Insufficient reagent strength
INVALID CHEM				Invalid chemistry
LEV SENSE ERR				Low reagent fluid
LO REAGENT				MC reagent level low
MOTION ERR				Motion error
NO DIL1 ON SYS				No diluent reagent on the reagent carousel
NO REAG ON SYS				Reagent not on board
NO SAMP DETECT				Low sample fluid
NO SAMP ON SYS				Sample not on board
NOT ACCEPTED				Wrong state for sample program message
PENDING TEST				Not ready
PROBE OBSTRUCT				Probe obstruction detected
RACK CONFLICT				HDLC/IBCT/HbA1c sample in wrong rack, test cancelled
RESULT ERROR				Result error
Results Suppressed	AG EXCESS	AX		Antigen excess
Results Suppressed	BL ABS HI	BH		Blank absorbance high
Results Suppressed	BL ABS LO	BL		Blank absorbance low
Results Suppressed	BL MAX DEV	BO		Blank outlier (maximum deviation)
Results Suppressed	BL MEAN DEV	BN		Blank noise (mean deviation)
Results Suppressed	BL RATE HI	SH		Blank rate high
Results Suppressed	BL RATE LO	SL		Blank rate low
Results Suppressed	CAL REF DRIFT	EC		Excessive reference drift – sample to calibration
Results Suppressed	INIT ABS HI	AH		Initial absorbance too high
Results Suppressed	INIT ABS LO	AL		Initial absorbance too low
Results Suppressed	INIT RATE HI	IR		Initial rate too high
Results Suppressed	INIT RATE LO	IL		CC chemistries, initial rate too low MC chemistries, a stirrer failure
Results Suppressed	INIT ADC HI	HI		Initial ADC error high

Table 13.9 Result Errors and Codes *(Continued)*

Result Displayed on Report	Printed in Remarks Area	Host Code	Inst. Code	Description
Results Suppressed	INIT ADC LO	LI		Initial ADC error low
Results Suppressed	INIT COND HI	CH		Initial conductance high
Results Suppressed	INIT COND LO	CL		Initial conductance low
Results Suppressed	K REQ	IK		Bad K value
Results Suppressed	MOTOR ERR	HW		Stirrer Motor Error
Results Suppressed	NA/K REQ	IN		Bad NA value
Results Suppressed	OIR HI	DH		Out of instrument range high
Results Suppressed	OIR LO	DL		Out of instrument range low
Results Suppressed	ORDAC HI	OH		Out of instrument range ORDAC high
Results Suppressed	ORDAC LO	OL		Out of instrument range ORDAC low
Results Suppressed	URDAC HI	GH		Under range URDAC high
Results Suppressed	URDAC LO	GL		Under range URDAC low
Results Suppressed	ORR HI	UH		Out of reportable range high
Results Suppressed	ORR LO	UL		Out of reportable range low
Results Suppressed	ORR O HI	UO		Out of ORDAC reportable range high
Results Suppressed	OVERFLOW	OF		Number overflow error
Results Suppressed	REF NOISE	DR		Reference signal noise (ISE only)
Results Suppressed	RX ABS HI	HR		Reaction absorbance high.
Results Suppressed	RX ABS LO	LR		Reaction absorbance low
Results Suppressed	RX ERR	RE		Reaction error
Results Suppressed	RX MAX DEV	RO		Reaction outlier (maximum deviation)
Results Suppressed	RX MEAN DEV	RN		Reaction noise (mean deviation)
Results Suppressed	RX NOISE	EA	A	Erratic ADC (Cup Chems only)
Results Suppressed	RXN RATE HI	RH		Reaction rate high
Results Suppressed	RXN RATE LO	RL		Reaction rate low
Results Suppressed	SAMP NOISE	DS		Sample signal noise (ISE only)
Results Suppressed	SAMP REF DRIFT	ES		Excessive reference drift – sample to sample
Results Suppressed	SUB DEPL	SD		Substrate depleted
Results Suppressed	TEMP ERR	TM	T	Temperature error (MC only)
TEST STOPPED				Test was aborted, system issue
TOO MANY TESTS				Too many tests on CC

Error Code – Definitions

Antigen Excess — A chemistry failed antigen excess test for immunoprotein reagents. This flag may indicate a contaminated cartridge.

Bad K/NA Value — K or NA are required to calculate a CALC result. Should one or the other fail or have an error, CALC cannot be calculated and this error is reported. Check your K and NA values for any error conditions.

K is required to calculate a urine NA result. If K value has an error, urine NA cannot be calculated.

Blank Absorbance High/Low — The mean absorbance measured during the reagent blank spin cycle (read window) exceeds expected limits. The units are measured in absorbance and will characterize reagent quality. This flag may indicate an issue with the reagent cartridge, reaction cuvette cleanliness or sample integrity if chemistry is sample blanked.

Blank Noise (Mean Deviation) — The average difference between the absorbance readings and the line of regression is greater than allowed. This is a check for a constant rate during the blank spin cycle. The flag may indicate possible issues with a photometer reading.

Blank Outlier (Maximum Deviation) — A single blank absorbance data point obtained during the reagent blank read window deviates more than allowed from the line of regression. The units are measured in delta absorbance. Blank Maximum Deviation is a check for a constant rate during the blank spin cycles. This flag may indicate possible issues with a photometer reading.

Blank Rate High/Low — Rate measured during blank timing period is not within specifications. Units are measured in delta absorbance/minute. This flag may indicate an issue with reagent contamination, reaction cuvette cleanliness or sample integrity.

Calculation Complete — Special Calculation was calculated with no result errors.

Calculation Incomplete — Not all tests required for the special calculation have valid results. Check results for the tests in question and rerun if necessary.

Calibration Failed — Calibration was scheduled but failed one or more acceptance limits.

Calibration Overridden — Chemistry result was calculated with an overridden calibration value. The calibration should be verified as valid before reporting the result.

Calibration Time Extended — Chemistry result was calculated with a calibration value from an expired calibration which had been extended. The calibration should be verified as valid before reporting the result.

Calibration Timed Out — Calibration expired before system could run this chemistry. Results are incomplete. The reagent must be calibrated and the sample reloaded.

Channel Bypassed — Chemistry has been bypassed by special request of the operator.

Chemistry Needs Calibration — Chemistry requires calibration before proceeding with the requested tests.

Chemistry Not Run — Chemistry not run for non-specified reason. Reload sample and attempt to run again.

Division Error — Special Calculation had a zero (0) result in the denominator of the calculation. Check results for the test in question and rerun test if necessary.

Erratic ADCs — The erratic ADC flag is an indication of MC cup noise. Noise is determined differently within each cup, dependent on each type of reaction.

TPm and PHOSm noise is evaluated by determining the standard estimate of the error divided by rate for the rate ADC readings.

ALBm noise is determined by evaluating the maximum deviation between the four ADC readings for both reference and sample plus reference readings.

GLUCm and BUNm/UREAm noise is evaluated using multiple rate readings used to determine the final result by screening these values for indication of noise.

Exceeds Critical Range Low/High — Result exceeds operator defined critical ranges in reference range setup. Please refer to Reference/Critical Ranges Setup in CHAPTER 3, *System Setup Options* in this manual for additional information.

Exceeds Reference Range Low/High — Result exceeds operator defined reference ranges in reference range setup. Please refer to Reportable Ranges Setup in CHAPTER 3, *System Setup Options* in this manual for additional information.

Excessive Reference Drift – Sample to Calibration — The reference value for an ISE sample measurement drifted from the reference value of the calibration and exceeded the limit. The units are measured in ADCs and are a measurement of ISE sample electrode drift.

This flag may be triggered for CL, K, NA and CALC by excessive ambient room temperature shifts. CL may also experience this flag when running many urine samples or needs maintenance. Correct CL electrode by running serum samples to recondition the electrode.

K and CALC may see this error when electrode is newly installed. Refer to CHAPTER 12, *Maintenance* in this manual for additional information.

A faulty calcium electrode MAY also cause sample reference drift errors on sodium and potassium results.

Excessive Reference Drift – Sample to Sample — The reference ADC value for a sample drifted above the acceptable difference between consecutive samples. The units are measured in ADCs and are a measurement of reference reagent readings by sample electrode. This measures the ability of the sample electrode to recover between samples.

This flag may be triggered for CL when running urine and serum samples together and is an indication of CL electrode condition.

A faulty calcium electrode MAY also cause sample reference drift errors on sodium and potassium results.

Greater Than Y - OIR HI — Calculated result is greater than the Upper Instrument Printable Range. Result is not reported.

Greater Than Y - ORR HI — Calculated result is greater than the Upper Reportable Range. Result is not reported.

Initial Absorbance High/Low — The reaction absorbance data taken from the first spin cycle after sample or trigger reagent inject has exceeded specifications. This is a measure of sample integrity and may indicate a turbid or lipemic sample or in DAT chems, the presence of an interfering substance.

Initial ADC Error High/Low — The ADC value determined from the first read after reagent addition has exceeded specifications. This is a measure of modular cup reagent or cup integrity.

This flag may be triggered if using old, contaminated or poorly prepared reagents, or when a cup chemistry fails to empty properly, leaving a dirty reaction cup. This flag may also be triggered when experiencing temperature differences either external or internal to the system.

Initial Conductance Error High/Low — The initial conductance readings for GLUCm or BUNm are below or above acceptable limits. This may be caused by poor reagent preparation, poor electrode integrity or cup heater issues.

Initial Rate High/Low — For CC chemistries, the reaction absorbance data obtained between 2 and 17 seconds after sample or the trigger reagent inject exceeds specifications. This flag is used to trigger auto and manual ORDAC testing

For the MC chemistries GLUCm, BUNm/UREAm, TPm (not CSF) and ALBm, this flag indicates a failure in the related stirrer mechanism.

Insufficient Diluent Reagent — The Diluent cartridge currently loaded on the system does not contain adequate volume of reagent to perform all required on-board dilutions.

Insufficient Reagent Strength — GLUCm and BUNm/UREAm reagent conductivity is below specifications. For GLUCm, this flag may indicate an issue with the glucose electrode. Replace electrode and continue running. For BUNm/UREAm, this flag may indicate an electrode cleaning issue, contaminated or old reagent, or possible valve errors.

Invalid Chemistry — System cannot find correct parameters to run the requested chemistry. Possible UDR or Database error.

ISE DAC Failure — The electrode response observed during calibration exceeds the pre-defined ADC range. This flag may indicate an issue with an electrode, analog board problems, or compromised reference reagent.

Less Than X-OIR LO — Calculated result is less than the Lower Instrument Printable Range. Result is not reported.

Less Than X-ORR LO — Calculated result is less than the Lower Reportable Range. Result is not reported.

Level Sense Error in Diluent Cartridge — A Level Sense Error occurred in the diluent cartridge and the system was unable to perform the required dilutions. This error may affect Ig-G, Ig-M, Ig-A, and TRFN in serum samples or MG, BUN, UREA, or URIC in urine mode. All of these tests perform on-board dilutions before analysis.

Low Reagent Fluid — A Level Sense Error was obtained when attempting to run a specific cartridge. Remove cartridge and check for bubbles and adequate reagent level. Remove bubbles, if present, and reload. If system still receives a level sense error, refer to the UniCel DxC Synchron Clinical Systems *Reference Manual*, CHAPTER 5, *Advanced Troubleshooting*, CC Hardware Symptoms for additional investigation.

Low Sample Fluid — No sample detect.

MC Reagent Level High/Low — Reagent level detected with cup is either too high or too low.

A high flag may indicate issues with a blocked drain value, low vacuum or malfunctioning level sensing. A low flag may indicate an empty reagent bottle or loose straw, bubbles in the reagent, pump failure, disconnected reagent lines or valve failures. After the problem is solved, repeat the last two samples run in that cup module.

Motion Error — Motion error occurred while system was performing requested test.

No Diluent on Reagent Carousel — The required diluent cartridge is not present on the system and the requested tests cannot be performed.

Not Ready — The system is preparing to run the requested tests and the tests are *Pending*.

ORDAC Result — Result was calculated using ORDAC feature.

Out of Instrument Range High/Low — The recovered value exceeds the value that the instrument will report.

Out of ORDAC Range High/Low — A reaction exceeded the range of ORDAC (Over Range Detection and Correction) values that the instrument will report.

If a sample has an ORDAC LO message and *Manual* ORDAC is on, rerun the sample with manual ORDAC off.

If a sample has an ORDAC LO message and *Auto* ORDAC is on:

1. Dilute the sample 1:2.
2. Program the sample as a 1:2 dilution.
3. Rerun the sample.

If the system gives an answer, report this result. If the result again gives an ORDAC LO, do a larger dilution and rerun for the applicable dilution.

Out of ORDAC Reportable Range — Result exceeds the operator defined ORDAC range high. Refer to Reportable Ranges Setup in CHAPTER 10, *System Setup* in this manual for additional information.

Out of Reportable Range High/Low — Result exceeds the operator defined reportable range high or low. Refer to Reportable Ranges Setup in CHAPTER 10, *System Setup* in this manual for additional information.

Probe Obstruction Detected — The system detected a block in the sampling system when sampling the requested samples. Check affected samples for clots, then reload. If issue still persists, refer to the UniCel DxC Synchron Clinical Systems *Reference Manual*, CHAPTER 5, *Advanced Troubleshooting*, CC Hardware Symptoms or MC Hardware Symptoms for additional investigation.

Reaction Absorbance High/Low — The mean absorbance measured during the reaction spin cycles exceeded limits. The units are measured in absorbance and will usually characterize sample integrity. If a high flag is triggered, dilute the sample and rerun. If a low flag is triggered, rerun sample for verification, except for TDMs. TDMs with low reaction absorbance flags should be diluted and rerun.

Reaction Noise (Mean Deviation) — The average difference between the reaction absorbance readings and the line of regression is greater than allowed. This checks for constant noise during the spin cycle. This flag may indicate possible issues with a photometer reading. Also, results below the low end of the analytical range may trigger the **RXN NOISE** flag.

Reaction Outlier (Maximum Deviation) — A single reaction absorbance data point, obtained during the reaction read window, deviates more than allowed from the line of regression. The units are measured in delta absorbance and will check for noise during the reaction read window. This flag may also indicate possible issues with a photometer reading.

Reaction Rate High/Low — The rate calculated during the reaction read window exceeds reaction rate limits. Units are measured in delta absorbance/minute. If a high flag is triggered, dilute the sample and rerun. If a low flag is triggered, rerun sample for verification. The low flag may also indicate an old or contaminated reagent cartridge.

It is not appropriate to report a result of “>” or “<“ the analytical range of the analyte for this error code.

Reagent Days Exceeded — On-board reagent has exceeded the usable days. The result should be verified as acceptable before reporting the value.

Reagent Expired — On-board reagent has exceeded its Lot Expiration Date. The result should be verified as acceptable before reporting the value.

Reagent Not on Board — Tests could not be run as programmed; reagent was not loaded on the system.

Reference Signal Noise — The difference between the high and low values of the eight reference readings (taken milliseconds apart) has exceeded the limits allowed. Units are measured in ADCs and are a measurement of the ISE reference electrode noise observed during the reference cycle. Consistent flags may indicate poor system grounding. Other causes include bubbles in reagent, pinched lines, or anything which may interrupt reference reagent flow.

Rerun Result — Test result is a rerun result.

Result Error — This error occurs when a result does not fit into a specific calibration curve. Rerun the sample for verification. This error may indicate sample interference issues. It may also indicate issues with photometer performance. Contact Beckman Coulter Support Center for additional information.

Sample in Wrong Rack — The requested tests have been programmed in the wrong rack when pre-programmed reserved racks have been specified for requested tests. Refer to Reserved Racks/Obstruct Detect in CHAPTER 10, *System Setup* in this manual for additional information on reserved racks.

Sample Signal Noise — The difference between the high and low values of the eight sample readings has exceeded the limits allowed. Units are measured in ADCs and are a measurement of system noise observed during the sample cycle. Consistent flags may indicate poor system grounding.

Set Point Modification — The calibration being used for this specific result was performed with adjusted set point values. The test result associated with this Result Error code is directly affected by these calibration adjustments. Refer to Calibrator Set Point Modifications.

Slope Offset Adjustment — The test result associated with this Result Error code was calculated with a modified calibration. Slope and/or Offset were modified and the result was directly affected by these calibratrion adjustments. Refer to Slope/Offset Adjustment.

Substrate Depletion — The difference (delta) between the initial absorbance taken after sample or trigger reagent inject and the final absorbance data within the reaction read window exceeds specifications. Rerun sample with ORDAC enabled (if appropriate) or dilute sample and rerun..

Temperature — The operating temperature of the system is beyond 0.1°C from the set point value. All cartridge chemistries will be reported with a flag.

Test Aborted — Scheduled test has been aborted for non-specified reason. This usually occurs when a system error compromises chemistry testing or sytem has been stopped while running.

Under Range URDAC High/Low — A reaction exceeded the range of URDAC (Under Range Detection and Correction) values that the instrument will report.

Common Error Messages and Corrective Actions

Table 13.10, Error Messages and Corrective Actions shows the most common system error messages in numerical sequence. It also shows the error message text, the accompanying text that will be inserted into the Event Log, a description of the probable cause for the error and the recommended corrective action to take to resolve the problem.

Online help is available for troubleshooting common error messages. Error messages that appear on the Integrated Workstation monitor contain links to the Online manual. Select the Help icon next to the event number to display specific information about the error. If the Help icon is gray, the *Instructions For Use* manual is not loaded. For error messages that do not have a Help icon next to the event number, refer to the UniCel DxC Synchron Clinical Systems *Reference Manual* for troubleshooting information.

Online Manual Links

The system may display an “Error -- The page cannot be displayed” pop-up message when you select the **Event ID** button to link to the online manual from an instrument pop-up error message, or when you select a link in the online manual. To continue, record the Event ID, select **OK** from the Error pop-up message, and then use the search feature of the online manual to find the topic you were seeking.

NOTE To view the instrument pop-up error Event ID number, use the Alt + F1 key combination to returrn to the the instrument screen.

Table 13.10 Error Messages and Corrective Actions

ID Class #	Pop-up	Event Log	Description	Corrective Action
0x01F80019 5	Cup positions were out of order. Repeat procedure starting with position 1 which is outermost.	**CAU:** Align - Sample rack positions are in reversed order **Message ID:** 0x01F80019	Wrong order used for rack positions while performing alignment.	• Redo the alignment. Make sure the correct positions are used (position 1 is on the outside of the sample carousel).
0x01F90005 3	Reagent Carousel Temperature Error. Reagent Stability may be compromised.	**CAU:** Reagent Carousel Temperature Error. Reagent Stability may become compromised **Message ID:** 0x01F90005 **Subsystem:** PWRMGR **Temperature:**	Sensor indicates the air temperature within the reagent carousel is out of range (+2.0°C to +8.0°C).	**Intermittent** message may be caused by: • recent loss of power • system reboot or • reagent door being open too long No operator action is necessary. **Consistent** messages may indicate issues with the: • Thermister • Thermister cable • Power Control Board • Peltier Assembly Contact Beckman Coulter Support Center for additional information.
0x01F90084 4	Power Smart Module Communication Error	**CAU:** SMC Receive Error **Message ID:** 0x01F90084 **Subsystem:** PWRMGR **Msg Size:** number of bytes	A communication error has occurred between the Power Distribution Board (Smart Module 21) and the Instrument Computer System (ICS).	• Press the DxC STOP button. Wait for the motors to release power (about 30 seconds, listen for the sound of the Smart Modules resetting) then Home the system. • If the error continues, contact Beckman Coulter Support Center for additional information.
0x01FA0003 4	DI water reservoir is not filling at all	**CAU:** DI water reservoir is not filling at all **Message ID:** 0x01FA0003	Whenever the DI water reservoir does not fill within its given amount of time, it will time out and flag that it has not filled.	• Make sure DI water is turned on at the source. • Make sure the manual water inlet valve is turned on. • Make sure the instrument has not rolled on top of the water inlet lines. • Home and restart the system. • If the error continues, contact Beckman Coulter Support Center for additional information.

Table 13.10 Error Messages and Corrective Actions *(Continued)*

ID Class #	Pop-up	Event Log	Description	Corrective Action
0x01FA0004 4	Flood In Waste Collection Sump. Switch #11	**CAU:** Flood In Waste Sump **Message ID:** 0x01FA0004	This error occurs when the waste collection sump float switch indicates that the canister is full, which is considered a flood for this canister.	• Check the waste collection sump canister for liquid. Empty if necessary. • Press the STOP button and Home the system. • Contact Beckman Coulter Support Center for additional information.
0x01FA0006 4	Flood In Primary Vacuum Accumulator. Switch #22	**CAU:** Flood In Primary Vacuum Accumulator **Message ID:** 0x01FA0006	This error will occur when the Vacuum Accumulator Float Switch indicates that the canister is full/flooded. This is a safety mechanism that prevents a flood from getting into the pumps. The Vacuum accumulator should never have any fluid in it and should be emptied whenever fluid is found during Maintenance.	• Check the vacuum accumulator canister for liquid. Empty if necessary. • Press the STOP button and Home the system. • If the error continues, contact Beckman Coulter Support Center for additional information.
0x01FA0008 4	Waste Exit Sump Is Not Draining At All	**CAU:** Waste Exit Sump Is Not Draining At All **Message ID:** 0x01FA0008	This error will flag when the Waste Exit Sump does not drain within the given drain time for the sump.	• Make sure Drain Line is not clogged or pinched. • Make sure Instrument is not rolled on top of the Drain Line. • If the error continues, contact Beckman Coulter Support Center for additional information.

Table 13.10 Error Messages and Corrective Actions *(Continued)*

ID Class #	Pop-up	Event Log	Description	Corrective Action
0x01FA0009 4	DI Water Canister Is Not Filling At All	**CAU:** DI Water Canister Is Not Filling At All **Message ID:** 0x01FA0009	Whenever the DI water canister does not fill within its given amount of time, it will time out and flag that it has not filled.	• Make sure DI water is turned on at the source and present in the DI Water Reservoir. • If Reservoir is full, — Press the STOP button and Home the system. — If the error continues, contact Beckman Coulter Support Center for additional information. • If Reservoir is empty, — Make sure the Manual water inlet valve is turned on. — Make sure the instrument has not rolled on top of the water inlet lines. — Home and restart the system. — If the error continues, contact Beckman Coulter Support Center for additional information.
0x01FA000B 4	Wash Concentrate Reservoir Is Not Filling At All	**CAU:** Wash Concentrate Reservoir Is Not Filling At All **Message ID:** 0x01FA000B	Wash Concentrate Reservoir Is Not Filling At All.	• Load a new bottle of Wash Concentrate. Refer to Load/Unload Modular Chemistries (MC).
0x01FA0014 4	Both The Waste B Exit Sump And The Collection Bottle Are Full. Switch #29,15,9.	**CAU:** Both The Waste B Sump And The Collection Bottle Are Full **Message ID:** 0x01FA0014	Both The Waste B Sump And The Collection Bottle Are Full. Only applies to systems configured with the Split Waste Option.	• Empty the external waste B collection bottle and Resume Waste B.
0x01FA0015 4	External Waste B Collection Bottle Is Full. Switch #29. Waste B Paused. Replace Waste B Container and select Resume in Instrument Commands when ready.	**CAU:** External Waste B Bottle Is Full **Message ID:** 0x01FA0015	The Waste B Container is Full. Only applies to systems configured with the Split Waste Option.	• Empty the external waste B collection bottle and Resume Waste B.

Table 13.10 Error Messages and Corrective Actions *(Continued)*

ID Class #	Pop-up	Event Log	Description	Corrective Action
0x01FA0016 4	Primary vacuum level is low.	**CAU:** Primary vacuum is low **Message ID:** 0x01FA0016	This error occurs when the Primary vacuum drops below 18 in Hg for more than 15 seconds. There is no vacuum level adjustment now and cannot be set.	• Check vacuum levels and Home the system. • Make sure is present, replace if necessary. Refer to Load/Unload Modular Chemistries (MC). • Make sure caps on pressurized bottles are tight. • Make sure Vacuum Accumulator canister in the rear of the Hydro is empty. • Contact Beckman Coulter Support Center for additional information.
0x01FA0019 4	10 psi Air Supply Pressure Is Low.	**CAU:** 10 psi Air Pressure Is Low **Message ID:** 0x01FA0019	This error occurs when the transducer line #129 is outputting a value into the Hydro Board that is below the 10 psi specification.	• Check pressure levels and Home the system. • Adjust pressure levels if necessary as follows: — Adjust pressure in Main system above 17 psi. — Adjust the high pressure system to 17 psi. — Adjust the low pressure system. The pressure range for the low pressure system is 8-11 psi. Set it at 10 psi. • Contact Beckman Coulter Support Center for additional information.
0x01FA001A 4	10 psi Air Supply Pressure Is High	**CAU:** 10 psi Air Pressure Is High **Message ID:** 0x01FA001A	This error occurs when the transducer line #129 is outputting a value into the Hydro Board that is above the 10 psi specification.	• Check pressure levels and Home the system. • Adjust pressure levels if necessary as follows: — Make sure the 25 psi (Main Pressure) gauge on the hydro reads within 24 to28 psi. — Adjust the 25 psi (Main Pressure) regulator as necessary. — When the 25 psi pressure is within range, make sure the High Pressure reading on the Hydro Status screen is 17 ± 1. — Adjust the low pressure system. The pressure range for the low pressure system is 8-11 psi. Set it at 10 psi. • Contact Beckman Coulter Support Center for additional information.

Table 13.10 Error Messages and Corrective Actions *(Continued)*

ID Class #	Pop-up	Event Log	Description	Corrective Action
0x01FA001B 4	17 psi air supply pressure is low	**CAU:** 17 psi Air Pressure is Low **Message ID:** 0x01FA001B	This error will occur whenever there is a problem within the high-pressure system. If the high pressure reads lower than 14 psi for more than 15 seconds it will be flagged as low.	• Home the system. • If the instrument returns to *Standby*, adjust pressure levels if necessary as follows: — Make sure the 25 psi (Main Pressure) gauge on the hydro reads within 24 to28 psi. — Adjust the 25 psi (Main Pressure) regulator as necessary. — When the 25 psi pressure is within range, make sure the High Pressure reading on the Hydro Status screen is 17 ± 1. — Adjust the 17 psi (High Pressure) regulator as necessary. — When the 17 psi pressure is within range, make sure the Low Pressure reading on the Hydro Status screen is within range. — Adjust the 10 psi (Low Pressure) regulator as necessary. • If the instrument will not return to *Standby*, contact Beckman Coulter Support Center for additional information.
0x01FA001C 4	17 psi air supply pressure is high	**CAU:** 17 psi air pressure is high **Message ID:** 0x01FA001C	This error will occur whenever there is a problem within the high-pressure system. If the High pressure reads higher than 19 psi for more than 15 seconds it will be flagged as “High.”	• Check pressure levels and Home the system. • Adjust pressure levels if necessary as follows: — Make sure the 25 psi (Main Pressure) gauge on the hydro reads within 24 to28 psi. — Adjust the 25 psi (Main Pressure) regulator as necessary. — When the 25 psi pressure is within range, make sure the High Pressure reading on the Hydro Status screen is 17 ± 1. — Adjust the high pressure system to 17 psi. • Contact Beckman Coulter Support Center for additional information.

Table 13.10 Error Messages and Corrective Actions *(Continued)*

ID Class #	Pop-up	Event Log	Description	Corrective Action
0x01FA002B 4	Hydro Smart Module Communication Problem. Stop/Home may resolve this issue.	**CAU:** Hydro SM not communicating with MSMC. Check fiber optics communication loop **Message ID:** 0x01FA002B	System stopped. Communication issue with hydro smart module.	• Press the DxC STOP button. Wait for the motors to release power (about 30 seconds, listen for the sound of the Smart Modules resetting) then Home the system. • If the error continues, contact Beckman Coulter Support Center for additional information.
0x01FA0034 4	Hydro Illegal Switch Condition	**CAU:** Hydro Illegal Switch Condition **Message ID:** 0x01FA0034 **Container:** *container*	Float Switch sending full and empty messages at the same time.	• Unscrew the canister. Wipe the float switch and make sure the float is not stuck. • Replace the Float Switch in the specified container.
0x025C0001 4	Instrument Computer Error	**CAU:** Debug port abort **Message ID:** 0x025C0001 **Subsystem:** CAU **Problem Area:** problem area	Likely cause is the Instrument computer has attempted to access a restricted area or file.	• At the Red Message screen, select Shutdown. • If the problem continues contact Beckman Coulter Support Center for additional information.
0x025C0009 4	Instrument Computer Error	**CAU:** Bus Error **Message ID:** 0x025C0009 **Subsystem:** CAU **Task Name:** task name **Vector ID:** vector id	Likely cause is the Instrument computer has received an invalid or unexpected response. This is not caused by user input.	• At the Red Message screen, select Shutdown. • If the problem continues contact Beckman Coulter Support Center for additional information.
0x0262000F 4	CC Sample Probe Disabled Due To Level Sense Errors	**CAU:** CC Sample Probe Disabled Due To Level Sense Errors **Message ID:** 0x0262000F **Subsystem:** *RASched*	Five consecutive sample level sense errors – probe, bead, bad alignment or level sense board problem. System Response = Pause RA.	• Make sure Samples are in the correct rack. • Perform CC Sample Probe to Cup and CC Sample Probe Height alignments. Refer to step 3 of the Replace the Old Probe procedure. • Perform CC Sample Probe Level Sense Alignment (Calibration).

Table 13.10 Error Messages and Corrective Actions *(Continued)*

ID Class #	Pop-up	Event Log	Description	Corrective Action
0x02620012 4	CC Reagent Cartridge - No Fluid Detected **Chemistry Name:** *chemistry name* **Reagent Position:** *reagent position* **Component:** *component*	**CAU:** CC Reagent Cartridge No Fluid Detected **Message ID:** 0x02620012 **Subsystem:** *RASched* **Chemistry Name:** **Reagent Position:** **Component:**	Two consecutive reagent level sense errors for same cartridge - cartridge is unusable.	• Remove bubbles from cartridge neck or floating on reagent surface. • Reload reagent cartridge. Refer to Load/Unload Cartridge Chemistries (CC).
0x02620017 2	CC Reaction Wheel Subsystem Motion Error	**CAU:** CC Reaction Wheel Subsystem Motion Error **Message ID:** 0x02620017 **Subsystem:** *RASched* **Action Name:** *action name*	This error will occur with any type of motion error within the Reaction Wheel.	• Raise canopy and check for obvious obstruction of the Reaction Wheel. • Make sure sample and Reagent Mixer paddles are properly seated. • Make sure Wash Tower is properly seated and aligned to cuvettes. • Press the STOP button and Home the system. • Contact Beckman Coulter Support Center for additional information.

Table 13.10 Error Messages and Corrective Actions *(Continued)*

ID Class #	Pop-up	Event Log	Description	Corrective Action
0x02620018 2	CC Reagent Delivery Subsystem Motion Error, Pausing	**CAU:** CC Reagent Delivery Subsystem Motion Error, Pausing **Message ID:** 0x02620018 **Subsystem:** RaSched	This occurs after 2 motion errors on the Reagent Delivery Subsystem. The CC side of the system is placed into *Pausing* then *Stopped* state.	• When the instrument goes to *Stopped* state, check for possible interference with the motion of the reagent probes, reagent mixer or reagent syringe drive. • Make sure the reagent drip tray is installed properly. • Make sure the reaction carousel evaporation cover is installed properly. • Check the reagent syringe to make sure the plunger is seated correctly. • Press the DxC STOP button. Wait for the motors to release power (about 30 seconds, listen for the sound of the Smart Modules resetting) then Home the system. • While the system Homes, check for possible interference issues. • If the system Homes successfully, restart the run and check the reagent probes and mixer for possible interferences (e.g., improper cable routing or not in alignment).

Table 13.10 Error Messages and Corrective Actions *(Continued)*

ID Class #	Pop-up	Event Log	Description	Corrective Action
0x02620019 2	CC Sample Delivery Subsystem Motion Error, Pausing	**CAU:** CC Sample Delivery Subsystem Motion Error, Pausing **Message ID:** 0x02620019 **Subsystem:** *ccScheduler*	This occurs after two motion errors on the Sample Delivery Subsystem. Level Sense errors will not trigger this error. The system goes into *Pausing* and then *Stopped* state.	• Raise canopy and check for obvious obstruction of the sample probe or syringe. • Press the STOP button and Home the system. While system is homing, observe motion of the CC sample syringe and CC Sample probe. The probe and syringe should complete their operations in a smooth manner. • If the error continues, check the event log to determine if the syringe or probe is responsible for the error. • If the CC sample probe is responsible, perform the appropriate vertical or horizontal alignment. • If the Syringe is responsible, check for proper seating of syringe assembly. • Contact Beckman Coulter Support Center for additional information.
0x0262001A 4	CC Sample Probe Obstruction **Sample ID:** **Rack ID:** **Rack Position:** This occurs on first attempt	**CAU:** CC Sample Probe Obstruction **Message ID:** 0x0262001A **Subsystem:** *RASched* **Sample ID:** **Rack ID:** **Rack Position:** **Sample Error Count:** **Probe Error Count:** **Cycle Number:**	This error occurs when the CC sample probe ODC (Obstruction Detection & Correction) indicates that the probe is obstructed during sample aspiration.	• No operator action is necessary. • The system will attempt a second aspiration from this sample.

Table 13.10 Error Messages and Corrective Actions *(Continued)*

ID Class #	Pop-up	Event Log	Description	Corrective Action
0x0262001B 4	Unrecovered CC Sample Probe Obstruction	**CAU:** Unrecovered CC Sample Probe Obstruction **Message ID:** 0x0262001B **Subsystem:** *ccScheduler*	This error occurs when there was an Obstruction present at the CC sample probe. The probe tried to clear the obstruction by flushing, but the obstruction could not be removed. The CC side of the system will finish any tests that are in progress and then go to a *Stopped* state.	• Flush the CC Sample probe per the "As Needed" Flush the Sample and Reagent Probe procedure. • If flushing probe is not successful, Replace the Sample and Reagent Probe. • If probe is clear and error continues, check for pinched Sample line tubing. • If the error continues contact Beckman Coulter Support Center for additional information.
0x0262001D 2	CC Reagent Probe A Motion Error	**CAU:** CC Reagent Probe A Motion Error **Message ID:** 0x0262001D **Subsystem:** *RASched* **Action Name:** *action name*	This error is caused by a Vertical or Rotary motion error. This will cause the instrument to go into a *Stopped* state.	• Raise canopy and check for obvious obstruction of the CC reagent Probe A. • Press the STOP button and Home the system. While system is homing, observe motion of the CC reagent probe A. The probe should complete its operations in a smooth manner. • If the error continues, check the event log to determine the specific subsystem error. Refer to Event Log. • If event log indicates a vertical error, make sure the reagent cartridges on the carousel are pushed in and seated properly. • Perform the appropriate vertical or horizontal CC reagent Probe A alignment. Refer to step 3 in the Install the New Probe procedure. • Contact Beckman Coulter Support Center for additional information.

Table 13.10 Error Messages and Corrective Actions *(Continued)*

ID Class #	Pop-up	Event Log	Description	Corrective Action
0x0262001E 2	CC Reagent Probe B Motion Error	**CAU:** CC Reagent Probe B Motion Error **Message ID:** 0x0262001E **Subsystem:** *RASched* **Action Name:** *action name*	This error is caused by a Vertical or Rotary motion error. This will cause the instrument to go into a *Stopped* state.	• Raise canopy and check for obvious obstruction of the CC reagent Probe B. • Press the STOP button and Home the system. While system is homing, observe motion of the CC reagent probe B. The probe should complete its operations in a smooth manner. • If the error continues, check the event log to determine the specific subsystem error. Refer to Event Log. • If event log indicates a vertical error, check that the reagent cartridges on the carousel are pushed in and seated properly. • Perform the appropriate vertical or horizontal CC reagent Probe B alignment. Refer to Event Log. • Contact Beckman Coulter Support Center for additional information.
0x02620020 2	CC Reagent Syringe Motion Error	**CAU:** CC Reagent Syringe Motion Error **Message ID:** 0x02620020 **Subsystem:** *RASched* **Action Name:** *action name*	This error occurs when there is an error within the CC Reagent Syringe Subsystem. This includes both the Shear valve Motor and the Lead Screw Motor.	• Raise canopy and check for proper seating of syringe assembly. • Press the STOP button and Home the system. While system is homing, observe motion of the CC reagent syringe. The syringe should complete its operations in a smooth manner. • If the error continues, contact Beckman Coulter Support Center for additional information.
0x02620021 2	CC Reagent Switch Motion Error	**CAU:** CC Reagent Switch Motion Error **Message ID:** 0x02620021 **Subsystem:** *RASched* **Action:**	This error will occur whenever there is a motion error in the Reagent Switch (A/B valve). This error does not occur during a home, only runtime, primes, etc.	• Press the STOP button and Home the system. • Contact Beckman Coulter Support Center for additional information.

Table 13.10 Error Messages and Corrective Actions *(Continued)*

ID Class #	Pop-up	Event Log	Description	Corrective Action
0x02620022 2	CC Reagent Wheel Motion Error	**CAU:** CC Reagent Wheel Motion Error **Message ID:** 0x02620022 **Subsystem:** RASched **Action Name:** action name	The CC Reagent wheel observed a motion error. The wheel itself may be obstructed.	• Shut Down the instrument. Refer to System Shutdown/Restart. • When the DxC is turned off, manually unlatch the CC Reagent Compartment door. The latch is located below the CC reagent compartment door and above the instrument power switch. Slide the latch to the left to open the compartment door. • At this time, the reagent carousel can be manually rotated, if necessary, to clear a jammed cartridge. • Close CC Reagent compartment door. • Power the instrument back up. Refer to System Shutdown/Restart. • If the problem continues, contact Beckman Coulter Support Center for additional information.
0x02620024 2	CC Sample Mixer Motion Error	**CAU:** CC Sample Mixer Motion Error **Message ID:** 0x02620024 **Subsystem:** *RASched* **Action:**	This error will occur when there is a motion error within the Sample mixer crane. These errors will occur while in *Standby*, *Priming*, or during runtime. This error will not pop up during a home. This can be a rotary or vertical motion error.	• Make sure mixer has the necessary room to move. • Make sure the wiring and cabling are secured properly. • Make sure mixer paddle is seated firmly in its housing. • Home and restart the system. • If mixer appears out of position, perform rotary or vertical alignment. • If motion error continues, contact Beckman Coulter Support Center for additional information.

Table 13.10 Error Messages and Corrective Actions *(Continued)*

ID Class #	Pop-up	Event Log	Description	Corrective Action
0x026200252	CC Sample Syringe Motion Error	**CAU:** CC Sample Syringe Motion Error **Message ID:** 0x02620025 **Subsystem:** *RASched* **Action Name:** *action name*	This error occurs when there is an error within the Sample Syringe Subsystem. This includes both the Shear valve Motor and the Lead Screw Motor.	• Make sure syringe and plunger are properly seated at top and base of syringe. • Check for obstruction of syringe movement. • Perform CC Syringe Home Alignment. • If the error continues, contact Beckman Coulter Support Center for additional information.
0x026200334	10 Cuvettes Have failed Water Blank	**CAU:** 10 Cuvettes Have Failed Water Blank **Message ID:** 0x02620033 **Subsystem:** *RaSched*	This error can be flagged for the following: • A cuvette's wavelength absorbance is over 350 mA (Absorbance) for all wavelengths between 340 to 700 nanometers. • A cuvette's wavelength absorbance is over 200 mA (Absorbance) for the 940 nanometer wavelength (PRO System only). • PSM Error. • LPIA Failure.	• Remove wash station head and inspect probes for blockage and wiper for wear. Refer to Replace Cuvette Wiper for removal of Wash Station. • Check wash station wiper alignment. • Check wash station alignment. • Remove reaction carousel and check cuvette cleanliness. Non-resolution of problem may indicate photometer issues. Contact Beckman Coulter Support Center for additional information.
0x026200344	CC Reagent probe disabled due to level sense errors	**CAU:** CC Reagent Probe Disabled Due To level Sense Errors **Message ID:** 0x02620034 **Subsystem:** *RASched* **Probe:** *probe*	Multiple reagent cartridges have level sense errors.	• Home the system. • Check reagent cartridges for bubbles. • Perform Reagent Probe to Cartridge and Reagent Probe Height in Cartridge Alignments. Refer to step 3 of the Replace the Old Probe procedure.

Table 13.10 Error Messages and Corrective Actions *(Continued)*

ID Class #	Pop-up	Event Log	Description	Corrective Action
0x02620036 4	Level sense error in one or more cartridges	**CAU:** Level sense error in one or more cartridges **Message ID:** 0x02620036 **Subsystem:** *RASched*	This error occurs when the reagent probes were unable to detect fluid in a selected cartridge or cartridges during a reagent load. One attempt by each A and B reagent probe is made to level sense and resulting levels are then compared for accuracy/consistency.	• Unload the reagent cartridge and inspect to see if there are any bubbles in the cartridge compartments, or residual fluid on the sidewalls of the openings of the cartridge compartments. This could cause false triggering of the level sense. Refer to Load/Unload Cartridge Chemistries (CC). • Cartridge must be reloaded to initiate level sense. • Check reagent probe alignment for any residual fluid in wash collar. Consistent messages may indicate issues with the level sense function of: • reagent probe bead assembly • reagent probe alignments • level sense board Contact Beckman Coulter Support Center for additional information.
0x0262003A 4	CC Sample Probe disabled due to obstruction errors	**CAU:** CC Sample Probe Disabled Due To Obstruction Errors **Message ID:** 0x0262003A **Subsystem:** *ccScheduler*	Multiple samples had Obstructions (Clots).	• Try flushing probe from the top. Refer to Flush the Sample and Reagent Probe. • Perform the CC Sample Probe Alignment (Calibration). Refer to Flush the Sample and Reagent Probe. • Replace probe. Refer to Flush the Sample and Reagent Probe.
0x0262003F 4	Too many tubes not venting correctly, sampling for the CC probe will be stopped	**CAU:** CC Sample Probe disabled due to Excess Vacuum Errors **Message ID:** 0x0262003F **Subsystem:** *ccScheduler*	Multiple tubes had excessive vacuum in thick stopper closed tubes. CC Sample Probe Disabled.	• Check cap piercer for broken blade. Refer to Replace CTS Blade/Wick (1-Blade Thick CTS Option) or Replace CTS Blade (1-Blade Narrow CTS Option) to inspect the blade. • Perform CC ODC Alignment.

Table 13.10 Error Messages and Corrective Actions *(Continued)*

ID Class #	Pop-up	Event Log	Description	Corrective Action
0x02620040 4	Too many tubes not venting correctly, sampling for the CC probe will be stopped	**CAU:** CC Sample Probe Disabled due to Excess Pressure Errors **Message ID:** 0x02620040 **Subsystem:** *ccScheduler*	Multiple tubes had excessive pressure in thick stopper closed tubes. CC Sample Probe Disabled.	• Check cap piercer for broken blade. Refer to Replace CTS Blade/Wick (1-Blade Thick CTS Option) or Replace CTS Blade (1-Blade Narrow CTS Option) to inspect the blade. • Perform CC ODC Alignment.
0x0262004B 4	CC Sample Side Pausing Due to Sample Rack Subsystem Stopped	**CAU**: CC Sample Side Pausing due to Sample Rack Subsystem Stopped **Message ID**: 0x0262004B **Subsystem**: ccSched	Likely cause is an obstruction in the sample rack handler. Current In-Process samples will continue until finished. No more samples will be loaded.	• When instrument goes to *Stopped* state, press the DxC STOP button. Wait for the motors to release power (about 30 seconds, listen for the sound of the Smart Modules resetting) then Home the system. • Check for any obstructions in the sample rack handler and clear any obstruction found. • Home the system. • Reload any incomplete racks. • Press the RUN button to resume testing.
0x02620051 4		**CAU:** CC Reagent Volume **Message ID:** 0x02620051 **Subsystem:** ccSched **cart_status:** cart_status **position:** position **tests_left:** tests_left **port_a_vol:** port_a_vol **port_b_vol:** port_b_vol **port_c_vol:** port_c_vol	This event is generated each time a reagent volume in a reagent cartridge changes, due to a reagent delivery or a level sense operation. It gives the current volumes in the cartridge and the number of tests left.	• No operator action is necessary.
0x02660001 4	No Diluent Cartridge	**CAU:** No Diluent Cartridge **Message ID:** 0x02660001 **Subsystem:** *RASched* **Chem Name:** *chem id*	Diluent cartridge must be loaded to performed requested tests. Tests requiring the diluent cartridge will be incomplete.	• Load a DIL1 Cartridge. Refer to Load/Unload Cartridge Chemistries (CC).

Table 13.10 Error Messages and Corrective Actions *(Continued)*

ID Class #	Pop-up	Event Log	Description	Corrective Action
0x02680001 4	CC Sample Level Sense Error **Sample ID:** *sample id* **Rack ID:** *rack id* **Rack Position:** *rack position*	**CAU:** CC Sample Level Sense Error **Message ID:** 0x02680001 **Subsystem:** *ccScheduler* **Sample ID:** *sample id* **Rack ID:** *rack id* **Position:** *rack position*	This error occurs under following conditions: • The bottom of the container is reached before sample is detected (e.g., empty cup or tube). • Insufficient sample volume in container. • Level sense is triggered sooner than expected for the given container type.	• Check sample for adequate volume • Check proper rack assignment for type of container used. • Check for fluid in collar wash – fluid in collar wash can trigger false level sense. • Check alignment of sample probe in collar wash.
0x02680002 4	CC Sample Obstruction Error **Sample ID:** **Rack ID:** **Rack Position:**	**CAU:** CC Sample Obstruction **Message ID:** 0x02680002 **Subsystem:** *RASched* **Sample ID:** **Rack ID:** **Position:**	This error occurs when an obstruction is detected on a second aspirate attempt of the same sample.	• Check specified sample for clots. Remove clots and rerun. • Check sample volume. • If Nesting cup used, make sure rack is correct. • If multiple obstruction errors occur, flush probe. Refer to Flush the Sample and Reagent Probe. • Check tubing from top of probe to ODC sensor for crimps. If crimped, tubing will need to be replaced.
0x02680003 4	Sample tube did not vent correctly. Remove cap and reload tube. **Sample ID:** *sample id* **Rack:** *rack id* **Position:** *rack position* CC Sample Probe	**CAU:** CC Sample Tube Excess Vacuum Error **Message ID:** 0x02680003 **Subsystem:** *RASched* **Sample ID:** *sample id* **Rack ID:** *rack id* **Rack Position:** *rack position*	Probe detected excessive vacuum in thick stopper closed tube on second attempt. Sample is aborted.	• Uncap tube and rerun. • If occurs consistently for many samples, check cap piercer for broken blade. Refer to Replace CTS Blade/Wick (1-Blade Thick CTS Option) or Replace CTS Blade (1-Blade Narrow CTS Option) to inspect the blade. • Perform CC ODC Alignment.

Table 13.10 Error Messages and Corrective Actions *(Continued)*

ID Class #	Pop-up	Event Log	Description	Corrective Action
0x02680004 4	Sample tube did not vent correctly. Remove cap and reload tube. **Sample ID:** *sample id* **Rack:** *rack id* **Position:** *rack position* CC Sample Probe	**CAU:** CC Sample Tube Excess Pressure Error **Message ID:** 0x02680004 **Subsystem:** *RASched* **Sample ID:** *sample id* **Rack ID:** *rack id* **Rack Position:** *rack position*	Probe detected excessive pressure in thick stopper closed tube on second attempt. Sample is aborted.	• Uncap tube and rerun. • If occurs consistently for many samples, check cap piercer for broken blade. Refer to Replace CTS Blade/Wick (1-Blade Thick CTS Option) or Replace CTS Blade (1-Blade Narrow CTS Option) to inspect the blade. • Perform CC ODC Alignment.
0x02BC1300 4	Photometer Error (*error message*), Command: *0xcommand*, Error Number: *0xerror number*	**CAU:** Photometer Error **Message ID:** 0x02BC1300 **Error Msg:** *error message* **Command:** *0xcommand* **Error number:** *0xerror number*	This error occurs when the photometer fails to successfully read/analyze a cuvette. There are several types of Photometer Smart Module (PSM) errors. If for any reason the instrument “Stops” while the photometer is trying to read a cuvette, the photometer will flag an error. Check the Event Log for any messages that might indicate a problem around the same time stamp as the PSM Error. Check the Cuvette Center Alignment for any cuvettes that exceed a 0±6 value. This will flag a PSM Error.	• Press the STOP button and Home the system. • Check Event Log for specific PSM subsystem errors. Refer to Event Log. • Contact Beckman Coulter Support Center for additional information.
0x02BC2107 4	Failed to Initialize Photometer	**CAU:** Failed to Initialize PSM **Message ID:** 0x02BC2107	The Photometer Smart Module (PSM) failed to initialize during startup or homing, the CC side is stopped.	• Press the DxC STOP button. Wait for the motors to release power (about 30 seconds, listen for the sound of the Smart Modules resetting) then Home the system. • If the error continues, contact Beckman Coulter Support Center for additional information.

Table 13.10 Error Messages and Corrective Actions *(Continued)*

ID Class #	Pop-up	Event Log	Description	Corrective Action
0x032B0005 2	CC Obstruction Detection Transducer Failure	**CAU:** CC Obstruction Detection Transducer Failure **Message ID:** 0x032B0005 **Subsystem:** *rasdSmc*	This error usually occurs whenever the obstruction transducer does not see fluid during runtime. Often this comes from a clogged degasser or lack of Degassed water to the system. The obstruction detection transducer is looking for a certain range of pressure during its primes before sample aspiration. If it does not see the correct differential, it will flag a transducer error.	• Check Obstruction Detection Transducer for obvious leaks or dripping from connections or the device itself and CC Sample Probe. • Check for pinch in Water line (from syringe to top of probe). • Make sure the CC sample Syringe is properly seated. • Make sure CC Sample Probe tubing is properly connected at top of Probe. Refer to step 3-4 of the procedure. • Contact Beckman Coulter Support Center for additional information.
0x03350010 2	MC Obstruction Detection Transducer Failure	**CAU:** MC Obstruction Detection Transducer Failure **Message ID:** 0x03350010 **Subsystem:** *ppsdSmc*	MC Obstruction detection hardware failure.	• Consistent failures may indicate issues with the MC Obstruction Detection Transducer. • Contact Beckman Coulter Support Center for additional information.
0x03880006 3	CC Reaction Carousel Temperature Out of Range	**CAU:** cc rwHtr reaction wheel temp out of range **Message ID:** 0x03880006 **Subsystem:** *cc rwHtr*	This error occurs under the following conditions: • When the reaction wheel monitor sensor readings fall outside of the +37°C ± 1.0°C specification. • When the reaction wheel control sensor readings fall outside of the +37°C ± 0.1°C specification.	• Check System Status for Reaction Carousel Temperature. Refer to Temperatures. • Check Cuvette Status for a cuvette flagged in red. This may indicate broken or cracked cuvette. Refer to Cuvette Water Blank Status. • If a cuvette appears to be damaged, replace it (extra cuvettes available in Spares kit and may be ordered). • Press the STOP button and Home the system.

Table 13.10 Error Messages and Corrective Actions *(Continued)*

ID Class #	Pop-up	Event Log	Description	Corrective Action
0x03EA0009 4	Instrument Detected Power Loss	**CAU:** Instrument Detected Power Loss **Message ID:** 0x03EA0009	The instrument detected an interruption in or loss of the AC input voltage	• If prompted, select Shutdown. • When the console indicates the shutdown is complete, turn off the main power switch on the instrument and the computer. • Verify the instrument power connections. • Restart the computer and turn the instrument back on. • If the instrument fails to power on or the problem continues after the instrument has been restarted, contact Beckman Coulter Support Center for additional information.
0x04B2001C 4	MC Sample Level Sense Error **Sample ID:** *sample id* **Rack:** *rack id* **Position:** *rack position*	**CAU:** Sample Level Sense Error **Message ID:** 0x04B2001C **Sample ID:** *sample id* **Rack:** *rack id*	This error occurs under following conditions: • The bottom of the container is reached before sample is detected (e.g., empty cup or tube). • Insufficient sample volume in container. • Level sense is triggered sooner than expected for the given container type.	• Check sample for adequate volume. • Check proper rack assignment for type of container used. • Check for fluid in collar wash – fluid in collar wash can trigger false level sense. • Check alignment of sample probe in collar wash.
0x04B2001E 4	MC Sample Probe Obstruction **Sample ID:** *sample id* **Rack ID:** *rack* **Position:** *position* This occurs on first attempt	**CAU:** MC Sample Probe Obstruction **Message ID:** 0x04B2001E **Sample ID:** *sample id* **Rack:** *rack* **Position:** *position*	This error occurs when the MC sample probe ODC (Obstruction Detection & Correction) sensor indicates that the probe is obstructed during sample aspiration.	• No operator action is necessary. • The system will attempt a second aspiration from this sample.

Table 13.10 Error Messages and Corrective Actions *(Continued)*

ID Class #	Pop-up	Event Log	Description	Corrective Action
0x04B2001F 4	Unrecovered MC Sample Probe Obstruction	**CAU:** Unrecovered MC Sample Probe Obstruction **Message ID:** 0x04B2001F	This error occurs when there was an Obstruction present at the MC sample probe. The probe tried to clear the obstruction by flushing, but the obstruction could not be removed. The MC side of the system goes to a *Stopped* state.	• Flush the MC Sample probe as per the "As Needed" Flush the Sample and Reagent Probe procedure. • If flushing probe is not successful, replace MC Sample probe. Refer to Replace the Sample and Reagent Probe. • If probe is clear and error continues, check for pinched Sample line tubing. • If the error continues contact Beckman Customer Support.
0x04B20026 4	Sample tube did not vent correctly. Remove cap and reload tube. **Sample ID:** *sample id* **Rack:** *sample rack id* **Position:** *sample position*, MC Sample Probe	**CAU:** MC Sample Tube Excess Vacuum **Message ID:** 0x04B20026 **Sample ID:** *sample id* **Rack ID:** *sample rack id* **Pos:** *sample position*	Probe detected excessive vacuum in thick stopper closed tube on second attempt. Sample is aborted.	• Uncap tube and rerun. • If occurs consistently for many samples, check cap piercer for broken blade. Refer to Replace CTS Blade/Wick (1-Blade Thick CTS Option) or Replace CTS Blade (1-Blade Narrow CTS Option) to inspect the blade. • Perform MC ODC Alignment.
0x04B20027 4	Sample tube did not vent correctly. Remove cap and reload tube. **Sample ID:** *sample id* **Rack:** *sample rack id* **Position:** *sample position*, MC Sample Probe	**CAU:** MC Sample Tube Excess Pressure **Message ID:** 0x04B20027 **Sample ID:** *sample id* **Rack ID:** *sample rack id* **Pos:** *position*	Probe detected excessive pressure in thick stopper closed tube on second attempt. Sample is aborted.	• Uncap tube and rerun. • If occurs consistently for many samples, check cap piercer for broken blade. Refer to Replace CTS Blade/Wick (1-Blade Thick CTS Option) or Replace CTS Blade (1-Blade Narrow CTS Option) to inspect the blade. • Perform MC ODC Alignment.
0x04B3000F 4	ISE DAC Setting Failed **Chem Name:** *chem id*	**CAU:** ISE DAC Setting Failed **Message ID:** 0x04B3000F **Chem Name:** *chem id*	ISE DAC Setting Failed for the specified chemistry.	• Make sure the ISE module is in the down position, the cover is in place, the reagent door is closed. • Check for reagent volume in bottles or flow cell leaks. • Check electrode connections.

Table 13.10 Error Messages and Corrective Actions *(Continued)*

ID Class #	Pop-up	Event Log	Description	Corrective Action
0x04B30010 4	MC Reagent Level High in Reaction Cup **Chem Name:** *chem id*	**CAU:** Reagent too full **Message ID:** 0x04B30010 **Cup:** *chem id*	MC sample probe detected reagent in the cup module above the expected level.	• Prime cup with reagent and make sure it drains. Refer to Priming MC Subsystems. • Failure to drain is either caused by low vacuum or a valve failure. • Contact Beckman Coulter Support Center for additional information.
0x04B30011 4	MC Reagent Level Low	**Chem Name:** **CAU:** Reagent too low **Message ID:** 0x04B30011 **Subsystem:** **Chem Name:**	This error occurs when the MC sample probe does not sense reagent at the proper level or at all during the sample dispense into the cup module.	• Check Reagent bottle volume. • Check Reagent tubing to straw connection is tight. • Make sure the straw is properly seated in the cap and reaches to the bottom of the reagent bottle. • Enable module and perform reagent/water primes to make sure the cup is filling and draining properly. Refer to Enable Modules. • Remove cover and check for leaks or presence of fluid at the base of the cup assembly and/or at the electrode/detector port. • Contact Beckman Coulter Support Center for additional information.
0x04B30013 4	MC Sample Probe disabled due to obstruction errors	**CAU:** MC Sample Probe disabled due to obstruction errors **Message ID:** 0x04B30013	More than 3 samples in a row had obstruction errors (clots), MC side *Stopped*.	• Prime MC internal probe wash to make sure it is not obstructed. Refer to Priming MC Subsystems (select Sample Delivery Subsystem.) • Probe may need to be replaced. Refer to Replace the Sample and Reagent Probe. • If error continues, perform MC ODC Calibration (Alignment).

Table 13.10 Error Messages and Corrective Actions *(Continued)*

ID Class #	Pop-up	Event Log	Description	Corrective Action
0x05780015 4	*XX* Is Empty	**CAU:** *XX* is Empty **Message ID:** 0x05780015 **Subsystem:** SRMGR	The indicated reagent has 0% left.	The system continues to process all samples on-board the sample carousel, then goes to *Stopped* state. • Make sure the system is in *Stopped* state. • Home the system. • Load Reagent. Refer to Load/Unload Reagent. • If there are sample racks on the DxC sample wheel, request the system to unload racks. Refer to Unload All Racks.
0x04B30017 4	ISE Reagent Level High	**CAU:** ISE Reagent too full **Message ID:** 0x4B30017 **Subsystem:**	ISE Buffer level in flowcell is too high, as detected by sample probe when sample is delivered.	• Verify ISE flowcell is draining properly. • ISE module may be out of alignment. Raise the ISE module and lower it securely into place. • If error continues, perform MC Probe Rotary to EIC and the MC Probe EIC Height alignments.
0x04B30018 4	ISE Reagent Level Low.	**CAU:** ISE Reagent too low **Message ID:** 0x04B30018	ISE Buffer level in flowcell is too low, as detected by sample probe when sample is delivered.	• Check ISE buffer level in bottle. • ISE module may be out of alignment. Raise the ISE module and lower it securely into place. • If error continues, perform MC Probe Rotary to EIC and the MC Probe EIC Height alignments.

Table 13.10 Error Messages and Corrective Actions *(Continued)*

ID Class #	Pop-up	Event Log	Description	Corrective Action
0x057A0008 4	Rack Out of Range	**CAU:** Invalid Rack ID **Message ID:** 0x057A0008 **Subsystem:** *SRShttl*	The bar code reader was unable to identify the rack within a specified range (1-999) during a load or unload of the rack.	• If this occurs on a rack load: — Check that the bar code label is on the rack and facing to the right. — Check the condition of the bar code label on the rack. • If this occurs on a rack unload, perform *Unload All*. Refer to Unload All Racks. • If the error continues, compare the racks shown on the Main screen with the racks present on the Sample Carousel to make sure the rack is physically present. — If on Main screen, but the rack is not physically present, restart system. Refer to System Shutdown/Restart. — If on Main screen, and the rack is physically present, shuttle latch may not have hooked the rack properly. Contact Beckman Coulter Support Center for additional information. • If this error occurred during a rack unload, check the results for the samples in the misread rack.
0x057A0009 4	Duplicate Rack ID *rack #*	**CAU:** Duplicate Rack ID **Message ID:** 0x057A0009 **Subsystem:** *SRShttl* **Rack ID:** *rack #*	This error occurs during a load when a rack ID is read by the bar code reader and an identical rack ID is already present on the system. The system cannot use duplicate ID racks simultaneously.	• Compare the number of the rack that was rejected with the racks currently on the analyzer by looking at the Main Screen. • Check the actual bar code that is on the rack correlates with the number that the system is rejecting. • Switch samples to a rack with a different ID or wait until the samples in the previous rack has completed testing and has been offloaded. • If the Main screen shows the Rack, but it is physically not on the instrument, use the Unload All feature to clear the sample wheel. Refer to Unload All Racks.

Table 13.10 Error Messages and Corrective Actions *(Continued)*

ID Class #	Pop-up	Event Log	Description	Corrective Action
0x057A000A 4	Tube Too Tall for Cap Piercing Sample Wheel. Rack; Cup:	**CAU:** Incompatible Tube Type **Message ID:** 0x057A000A **Subsystem:** *SRShuttle*	This error will only occur when the CTS thinks it has sensed a tube too soon. In reality, it is impossible to put too tall of a tube in because of the Gate Top and the CTS cover. They sit too low to allow any marginal tube height.	• Make sure tubes are approved for use and in appropriate rack for tube size. Refer to Sample Tubes Validated for Cap Piercing for CTS. • Make sure rack is designated properly as a 100 or 75 mm rack. • Make sure the tubes are seated properly in the appropriate rack. • If tubes have been re-capped, make sure caps are fully seated in the tube. • If error continues perform cap piercer tube height alignment. • Contact Beckman Coulter Support Center for additional information.
0x057A000E 4	Rack Height Not Defined	**CAU:** Rack Height Not Defined **Message ID:** 0x057A000E **Subsystem:** *SRShttl*	CTS is installed and the sample rack does not have a height defined.	• Make sure the rack height is defined. Refer to the UniCel DxC Synchron Clinical Systems *Reference Manual* for this procedure.
0x057B0008 4	Offload Track Is Full	**CAU:** Offload Track Is Full **Message ID:** 0x057B0008 **Subsystem:** *SRLdr*	This error will occur when the offload trays sensor has been triggered. This error is working as designed in most cases.	• Unload Racks from the Offload Tray. • If track is not full, make sure the switch at the far right end of the track is not pressed in. • If the error continues, contact Beckman Coulter Support Center.
0x05DC0070 4	Instrument Computer Interprocess Error	**CAU:** Boot Task - Message Receive Error **Message ID:** 0x05DC0070 **Subsystem**: boot **Err no:** errno	Likely cause is a resource issue between the Instrument computer processes. There may be a mix-up during file transfer or a file may be missing.	• At the Red Message screen, select Shutdown. • If the problem continues after the instrument has been shut down, contact Beckman Coulter Support Center for additional information.

Table 13.10 Error Messages and Corrective Actions *(Continued)*

ID Class #	Pop-up	Event Log	Description	Corrective Action
0x05DC0096 4	Smart Module Download Failed. Smart Module ID: sm id	**CAU:** Boot Task - SM Download Failed **Message ID:** 0x05DC0096 **Subsystem:** boot **SM ID:** sm id	Smart module communication error	• Press the DxC STOP button. Wait for the motors to release power (about 30 seconds, listen for the sound of the Smart Modules resetting) then Home the system. • If the error continues after homing, Shut down the instrument and restart. • If the problem continues after the instrument has been shut down, contact Beckman Coulter Support Center for additional information.
0x05DC01F8 4	CC Reagent Mixer Motion Error	**CAU:** Homing Error for CC Reagent Mixer **Message ID:** 0x05DC01F8 **Subsystem:** *boot*, *homing command*	This error occurs when there is a motion error with the Reagent Mixer, either Rotary or Vertical. The parameter in the event log entry will show one of the following: • "AttachRgtMixer" – error occurred attaching to smart module 0xC1. • "RecoverRgtMixer", "EnergizeRgtMixerVer", "RaiseRgtMixer" – error occurred during a vertical movement *toward* the home sensor flag. • "HomeRgtMixerVer" – error occurred during a vertical movement *away* from the home sensor flag. • "EnergizeRgtMixerCrn", "MoveRgtMixerToSensor" – error occurred during a horizontal movement *toward* the hardware sensor. • "HomeRgtMixerCrane" – error occurred during a horizontal movement.	• Raise canopy and check for obvious obstruction of the CC reagent mixer. • Press the STOP button and Home the system. While system is homing, observe motion of the CC reagent mixer. The mixer should complete its operations in a smooth manner. • If the error continues, check the event log to determine the specific subsystem error. • Perform the appropriate vertical or horizontal CC reagent mixer alignment. • Contact Beckman Coulter Support Center for additional information.

Table 13.10 Error Messages and Corrective Actions *(Continued)*

ID Class #	Pop-up	Event Log	Description	Corrective Action
0x05DC01FB 4	CC Reagent Carousel Motion Error	**CAU:** Homing Error for CC Reagent Carousel **Message ID:** 0x05DC01FB **Subsystem:** *boot*, *homing command*	This error occurs when there is any homing issue with the Reagent Carousel Subsystem. This includes the following: • Upper/Lower reagent decks/motors. • Both decks flag sensors. • The magnetic door sensor.	• If reagent cartridges have been loaded recently, make sure cartridges are fully seated and refrigerator door is latched. • Press the STOP button and Home the system. • Check Event Log for specific RGTWHL subsystem errors. • Contact Beckman Coulter Support Center for additional information.
0x05DC01FD 2	CC Sample Mixer Error	**CAU:** Homing Error: $s **Message ID:** 0x05DC01FD	This motion error is contained within the Sample Mixer Crane and will only occur during a home. This can be either a vertical or rotational error.	• Make sure mixer has the necessary room to move. • Make sure the wiring and cabling are secured properly. • Make sure mixer paddle is seated firmly in its housing. • If mixer appears out of position, perform rotary or vertical alignment. • Home and restart the system. • If motion error continues, contact Beckman Coulter Support Center for additional information.
0x05DC01FF 4	Sample Autoloader Error	**CAU:** Homing Error: $s **Message ID:** 0x05DC01FF	This error encompasses all homing motions in the Sample Rack Handling System (SRHS) and occurs whenever there is a homing issue during an **initial boot**. This includes the On Load Assembly, Shuttle, Sample Wheel, and the Lifter. If the devices do not find their home position in time or they jam, the error will be flagged.	• Check for any racks that may have jammed in the Sample Rack Handling System or if any of the devices have jammed together. • Check for other obstructions if no rack problem (covers, stoppers, etc.) • Press the STOP button and Home the system. • If error continues after Home, print screen and check event log for specific sub-system homing error. Contact Beckman Coulter Support Center for additional information.

Table 13.10 Error Messages and Corrective Actions *(Continued)*

ID Class #	Pop-up	Event Log	Description	Corrective Action
0x05DC0200 4	CC Subsystem Error	**CAU:** Homing Error for CC Subsystem **Message ID:** 0x05DC0200 **Subsystem:** *boot*, *homing command*	This is a generic homing error that occurs whenever there is an issue with the CC Subsystem. This will normally be the second error or will be preceded by a more definite error. The parameter for the event log entry will either show “InitPhotometer” if the error occurred during an RA Results subsystem SpinReactionWheel command or will show “HomeRA” if this error occurred while the RA Subsystem was performing a startup home and Prime.	• Press the STOP button and Home the system. • If the error continues, check Event Log for specific subsystem errors. • Contact Beckman Coulter Support Center for additional information.
0x05DC0201 4	CC Reaction Carousel Subsystem Error	**CAU:** Homing Error for CC Reaction Carousel Subsystem **Message ID:** 0x05DC0201 **Subsystem:** boot, homing command	An error occurred while homing the cuvette wash station or reaction carousel. Check the Event Log (classes 2 and 4) for specific reaction carousel or cuvette wash station related errors.	• Make sure the cuvette wash head is installed properly. Refer to Replace Cuvette Wiper to view wash head. • Press the DxC STOP button. Wait for the motors to release power (about 30 seconds, listen for the sound of the Smart Modules resetting) then Home the system. • If the error continues after homing, contact Beckman Coulter Support Center for additional information.

Table 13.10 Error Messages and Corrective Actions *(Continued)*

ID Class #	Pop-up	Event Log	Description	Corrective Action
0x05DC0202 2	MC Cups/ISE Subsystem Error	**CAU:** Homing Error: $s **Message ID:** 0x05DC0202	This generic homing error covers all aspects of the MC side in the homing routine. This error has several different triggers ranging from motion issues to "Attach" and download failures. • If the event log parameter is **AttachPhos**, **AttachAlb**, **AttachTP**, **AttachCrea**, **AttachBun**, **AttachGlu** or **AttachIse** then the error occurred attaching to one of the MC modules. • If the parameter is **InitCupsIse** or **PrimeCupsIse**, the error occurred during a cup or ISE initialize or prime for a stop or cold home. • If the parameter is **WHomeMCIsePpsd** or **WHomeMCCups** then the error occurred during a warm home of the ISE, MC Sample Delivery subsystem or MC cups. System *Stopped*. Generic homing error message. Check Event Log for specific subsystem errors.	• Press the STOP button and Home the system. • Restart system. Refer to System Shutdown/ Restart. • Contact Beckman Coulter Support Center for additional information.

Table 13.10 Error Messages and Corrective Actions *(Continued)*

ID Class #	Pop-up	Event Log	Description	Corrective Action
0x05DC0204 4	MC Probe/Syringe Error	**CAU:** Homing Error for MC Probe/Syringe **Message ID:** 0x05DC0204 **Subsystem:** boot, homing command	An error occurred while homing the MC Probe or MC Sample Syringe drive. Check the Event Log (classes 2 and 4) for specific MC probe or syringe related errors.	• When the instrument goes to *Stopped* state, check for possible interference with the motion of the MC probe or MC sample syringe drive. • Make sure the ISE, MC cup and sample carousel evaporation covers are installed properly. • Press the DxC STOP button. Wait for the motors to release power (about 30 seconds, listen for the sound of the Smart Modules resetting) then Home the system, refer to Home. • While the system Homes, check for possible interference issues. If the error continues after homing, Shut down the instrument refer to the Shutdown Procedure. • If the problem continues after the instrument has been shut down and restarted, contact Beckman Coulter Support Center for additional information.
0x05DC0227 4	No Response From Hydro Subsystem	**CAU:** Homing Timeout for Hydro Subsystem **Message ID:** 0x05DC0227 **Subsystem:** *boot, homing command*	This error occurs when the hydro fails to respond to commands or fails to attach. This event can be generated by any Hydro command sent by start.dat including “AttachHydro”, “StartAutomonitor”, “HydroInitStatus”, or “HydroWatchdogOn”.	• Check Event Log for specific subsystem errors. • Press the STOP button and Home the system, refer to Home. • Restart the instrument, refer to System Shutdown/Restart. • If the error continues, contact Beckman Coulter Support Center for additional information.
0x08000001 13	UCTA: Code Segment CRC Failure	**UCTA: Code segment CRC failure Message ID:** 0x08000001	Code CRC checksum not as expected. There may be a problem with the boot up process, RAM or the PC board.	• Shut down and restart the Integrated Workstation, refer to System Shutdown/Restart. • If the error continues, contact Beckman Coulter Support Center for additional information.
0x08000002 13	UCTA: Processor Exception. Exception Code:<value> Exception Address: <value>	**UCTA: Processor exception Message ID:** 0x08000002 **Processor Exception:** number **Exception Address:** address	An unexpected PC exception was generated.	• Shut down and restart the Integrated Workstation, refer to System Shutdown/Restart. • If the error continues, contact Beckman Coulter Support Center for additional information.

Table 13.10 Error Messages and Corrective Actions *(Continued)*

ID Class #	Pop-up	Event Log	Description	Corrective Action
0x08000101 13	UCTA: Queue Error	**UCTA:** Queue send error **Message ID:** 0x08000101 **rc:** return code **Queue ID:** id **Mudd/RL ID:** mudd id	A msg could not be sent to a queue because it was full or there are no more buffers for queues.	• Shut down and restart the Integrated Workstation, refer to System Shutdown/Restart. • If the error continues, contact Beckman Coulter Support Center for additional information.
0x08000102 13	UCTA: Queue Error	**UCTA:** Queue receive error **Message ID:** 0x08000102 **rc:** return code **Queue ID:** id **Mudd/RL:** instance	A msg could not be received on a particular queue.	• Shut down and restart the Integrated Workstation, refer to System Shutdown/Restart. • If the error continues, contact Beckman Coulter Support Center for additional information.
0x08000103 13	UCTA: Event Send Error. rc: <value> Task ID: <value> Event ID: <value> Instance: <value>	**UCTA: Event send error** **Message ID:** 0x08000103 **rc:** return code **Task ID:** id **Event ID:** id	An event could not be sent as expected.	• Shut down and restart the Integrated Workstation, refer to System Shutdown/Restart. • If the error continues, contact Beckman Coulter Support Center for additional information.
0x08000104 13	UCTA: Event Receive Error. rc:<value> Task ID: <value> Instance: <value>	**UCTA: Event receive error** **Message ID:** 0x08000104 **rc:** return code **Task ID:** id **Instance:** instance	An event was not received as expected.	• Shut down and restart the Integrated Workstation, refer to System Shutdown/Restart. • If the error continues, contact Beckman Coulter Support Center for additional information.
0x08000105 13	UCTA: Semaphore Error	**UCTA: P semaphore error** **Message ID:** 0x08000105 **rc:** return code **Task ID:** id **Instance:** instance	A semaphore could not be acquired as expected	• Shut down and restart the Integrated Workstation, refer to System Shutdown/Restart. • If the error continues, contact Beckman Coulter Support Center for additional information.

Table 13.10 Error Messages and Corrective Actions *(Continued)*

ID Class #	Pop-up	Event Log	Description	Corrective Action
0x08000106 13	UCTA: Semaphore Error	**UCTA: V semaphore error Message ID:** 0x08000106 **rc:** return code **Task ID:** id **Instance:** instance	A semaphore could not be release as expected.	• Shut down and restart the Integrated Workstation, refer to System Shutdown/Restart. • If the error continues, contact Beckman Coulter Support Center for additional information.
0x08000107 13	UCTA: Partition Error	**UCTA: Partition return buffer error Message ID:** 0x08000107 **rc:** return code **Size:** number	A buffer was not returned to the partition as expected.	• Shut down and restart the Integrated Workstation, refer to System Shutdown/Restart. • If the error continues, contact Beckman Coulter Support Center for additional information.
0x08000108 13	UCTA: Partition Error	**UCTA: Partition get buffer error Message ID:** 0x08000108 **rc:** return code **Size:** number	A buffer was not available from the partition.	• Shut down and restart the Integrated Workstation, refer to System Shutdown/Restart. • If the error continues, contact Beckman Coulter Support Center for additional information.
0x08000109 13	UCTA: Partition Error	**UCTA: Partition ident error Message ID:** 0x08000109 **rc:** return code **Size:** number	The partition could not be identified.	• Shut down and restart the Integrated Workstation, refer to System Shutdown/Restart. • If the error continues, contact Beckman Coulter Support Center for additional information.
0x0800010A 13	UCTA: Queue Error	**UCTA: Queue ident error Message ID:** 0x0800010A **rc:** return code **Queue ID:** id **Instance:** instance	The queue could not be identified.	• Shut down and restart the Integrated Workstation, refer to System Shutdown/Restart. • If the error continues, contact Beckman Coulter Support Center for additional information.
0x0800010E 13	UCTA: Timer Error	**UCTA: Timer error Message ID:** 0x0800010E **rc:** return code **Task ID:** id	An event timer could not be started because there were no more available from the pool.	• Shut down and restart the Integrated Workstation, refer to System Shutdown/Restart. • If the error continues, contact Beckman Coulter Support Center for additional information.

Table 13.10 Error Messages and Corrective Actions *(Continued)*

ID Class #	Pop-up	Event Log	Description	Corrective Action
0x0800010F 13	UCTA: Semaphore Error	**UCTA: Ident semaphore error Message ID:** 0x0800010F **rc:** return code **Task ID:** id	The semaphore could not be identified.	• Shut down and restart the Integrated Workstation, refer to System Shutdown/Restart. • If the error continues, contact Beckman Coulter Support Center for additional information.
0x08000110 13	UCTA: Operating System Error	**UCTA: Operating system error Message ID:** 0x08000110 **rc:** return code **Task ID:** id **Instance:** instance	OS error. This could be task ident, semaphore ident, timer arm, timer cancel, or other.	• Shut down and restart the Integrated Workstation, refer to System Shutdown/Restart. • If the error continues, contact Beckman Coulter Support Center for additional information.
0x08000501 13	UCTA: Hardware Motion Error Lan Type Device: device name Err: motion error id Time Interval: time	**UCTA: Hardware motion error Message ID:** 0x08000501 **Lan Type Device:** device name **Motion Error Code:** id **Time Interval:** time	See details in Event Log. I1754	• Press the UCTA STOP button and HOME the UCTA, refer to Home. While the UCTA is homing observe the motion of the UCTA and remove obstructions, if present. • If the error continues, contact Beckman Coulter Support Center for additional information.
0x08000502 13		**UCTA: Probe hardware is homing Message ID:** 0x08000502	Probe is homing.	• No operator action is necessary.
0x08000503 13		**UCTA: AV shuttle section hardware is homing Message ID:** 0x08000503	AV shuttle is homing.	• No operator action is necessary.
0x08000504 13		**UCTA: Rack section hardware is homing Message ID:** 0x08000504	Rack is homing.	• No operator action is necessary.
0x08000505 13	UCTA: Probe Section is Down	**UCTA: Probe hardware is down Message ID:** 0x08000505	Probe section is down.	• Contact Beckman Coulter Support Center for additional information.

Table 13.10 Error Messages and Corrective Actions *(Continued)*

ID Class #	Pop-up	Event Log	Description	Corrective Action
0x08000506 13	UCTA: AV Shuttle Section is Down	**UCTA: AV shuttle section hardware is down Message ID:** 0x08000506	AV shuttle section is down.	• Contact Beckman Coulter Support Center for additional information.
0x08000507 13	UCTA: Rack Section is Down	**UCTA: Rack section hardware is down Message ID:** 0x08000507	Rack section is down.	• Contact Beckman Coulter Support Center for additional information.
0x08000508 13	UCTA: Hardware Gate Failure	**UCTA: Load Gate is out of position. Message ID:** 0x08000508	UCTA gate failure while loading rack.	• Contact Beckman Coulter Support Center for additional information.
0x0800050C 13	UCTA: UCTA AV Pick and Place Sensor failure	**UCTA: AV Pick and Place Sensor failure Message ID:** 0x0800050C	AV Pick and Place Sensor failure	• Check the sensor connection attached to the Pick and Place holding plate. • Inspect the Pick and Place Head and replace if broken. See Replace the UCTA Pick and Place Head. • If the error continues, contact Beckman Coulter Support Center for additional information.
0x0800050E 13	UCTA: Unable to initialize the UCTA Transfer Shuttle. The DxI Dual Gantry Pick and Place may be in its path. Initialize DxI and then Home the UCTA.	**UCTA: Unable to initialize the UCTA Transfer Shuttle. Message ID:** 0x0800050E, **The DxI Dual Gantry Pick and Place may be in its path. Initialize DxI and then Home the UCTA.**	Unable to initialize the UCTA Transfer Shuttle because the DxI Dual Gantry Pick and Place may be in its path.	• Initialize the DxI system, refer to Initialize the DxI System. • Inspect the Pick and Place Head and replace if broken. See Replace the UCTA Pick and Place Head. • Press the UCTA STOP button and HOME the UCTA, refer to Home. • If the error continues, contact Beckman Coulter Support Center for additional information.
0x0800050F 13	UCTA: The DxI is unable to transfer aliquots. No aliquots will be made until action is taken at the DxI to make it ready to receive aliquots.	**UCTA: The DxI is unable to transfer aliquots. No aliquots will be made until action is taken at the DxI to make it ready to receive aliquots.**	The UCTA run will start but no aliquots will be made until the DxI Dual Gantry Pick and Place indicates it is clear of the UCTA Transfer Shuttle. DxC only racks will continue to be passed to the DxC.	• Initialize the DxI system, refer to Initialize the DxI System. • Inspect the Pick and Place Head and replace if broken. See Replace the UCTA Pick and Place Head. • If the error continues, contact Beckman Coulter Support Center for additional information.

Table 13.10 Error Messages and Corrective Actions *(Continued)*

ID Class #	Pop-up	Event Log	Description	Corrective Action
0x08000510 13	UCTA: Failed to pick up an SV in position value of the SV location	**UCTA: Failed to pick up an SV in position** *value* **of the** SV *location*.	UCTA failed to pick up an SV in the specified position.	• Check the UCTA Pick and Place. If it is broken, perform Replace the UCTA Pick and Place Head. • If the Pick and Place is not broken, perform UCTA Pick and Place (Vertical) Alignment. • If the error continues, contact Beckman Coulter Support Center for additional information.
0x08000511 13	UCTA: Failed to place an SV at position value of the SV Location	**UCTA: Failed to place an SV at position** *value* **of the** *SV Location*	UCTA failed to place an SV in the specified position.	• Check the UCTA Pick and Place. If it is broken, perform Replace the UCTA Pick and Place Head. • If the Pick and Place is not broken, perform UCTA Pick and Place (Vertical) Alignment. • If the error continues, contact Beckman Coulter Support Center for additional information.
0x08000512 13	UCTA: Failed to Pick the waste SV at position 8 of the UCTA SV Nest.	**UCTA: Failed to pick the waste SV at position 8 of the UCTA SV Nest. Message ID:** 0x08000512	UCTA failed to pick the waste SV at position 8 of the UCTA SV Nest.	• Perform UCTA Pick and Place (Vertical) Alignment. • If the error continues, contact Beckman Coulter Support Center for additional information.
0x08000801 13	UCTA: Sample Level Sense Error on Aspirate Device. Lan Type: device name Sample ID: id Rack: number Position: number	**UCTA: Sample Level Sense Error on Aspirate Device. Message ID:** 0x08000801 **Lan Type: device name Sample ID:** id **Rack:** number **Position:** number	Sample level sense error. Probe failed to detect fluid when being lowered into sample for aspiration.	• Check the samples for bubbles and verify sufficient sample volume. • Perform Priming UCTA Subsystems. • Reload the sample back onto the system. • If the error continues, check wash buffer lines and sample probe manifold for additional air bubbles that must be primed out. • If the error continues, contact Beckman Coulter Support Center for additional information.
0x08000803 13	UCTA: Level Sense Failure on Sample Dispense. Lan Type: Device Name Sample ID: id Sample Rack: rack number Position: number	**UCTA: Level Sense Failure on Sample Dispense Device. Message ID:** 0x08000803 **Lan Type:** Device Name **Sample ID:** id **Sample Rack:** rack number **Position:** number	Probe did not detect liquid when dispensing into SV.	• Check the aliquot probe alignment to the SV shuttle. • If the error continues, contact Beckman Coulter Support Center for additional information.

Table 13.10 Error Messages and Corrective Actions *(Continued)*

ID Class #	Pop-up	Event Log	Description	Corrective Action
0x08000804 13	UCTA Obstruction Detected Device. Lan Type: <value> Sample ID: <value> Sample Rack: <rack ID value> Position: <value>	**UCTA: Obstruction Detected Device. Message ID:** 0x08000804 **Lan Type:** Device Name **Sample ID:** id **Rack ID:** number **Position:** number	Obstruction detected on the specified device.	• Check the samples for clots. • Reload the sample back onto the system. • If the error continues, contact Beckman Coulter Support Center for additional information.
0x08000805 13	UCTA: A UCTA Sample Probe is Obstructed: DO NOT Home the UCTA before manually clearing the obstruction from the probe. Device <device name>.	**UCTA: A UCTA Sample Probe is Obstructed: DO NOT Home the UCTA before manually clearing the obstruction from the probe.Message ID:** 0x08000805. Device device name.	Check probe for Obstruction.	• Check for clots in the sample. • Flush the UCTA aliquot probe, refer to Flush the UCTA Left/Right Aliquot Probes. • Reload the sample onto the system.
0x08000901 13	UCTA: Software Initialization Error	**UCTA: Software initialization error Message ID:** 0x08000901 **Error Code:** id **rc:** return code **Task:** id	Software initialization error.	• Shut down and restart the Integrated Workstation, refer to System Shutdown/Restart. • If the error continues, contact Beckman Coulter Support Center for additional information.
0x08000902 13	UCTA: Error Reading Alignment File	**UCTA: Error reading, restoring, or creating alignment file Message ID:** 0x08000902 **Error Code:** id	Error reading alignment file.	• Shut down and restart the Integrated Workstation, refer to System Shutdown/Restart. • If the error continues, contact Beckman Coulter Support Center for additional information.
0x08001001 13	UCTA: External Communication Error	**UCTA: Unexpected XCOM parameter detected Message ID:** 0x08001001 **Error Code:** id **Addr/ID:** address id **Size/Packet:** size	Bad packet or buffer request size too large.	• If the error continues, contact Beckman Coulter Support Center for additional information.

Table 13.10 Error Messages and Corrective Actions *(Continued)*

ID Class #	Pop-up	Event Log	Description	Corrective Action
0x08001002 13	UCTA: External Communication Error	**UCTA: XCOM error during socket create Message ID:** 0x08001002 **Return Code:** return code **PNA Errno:** error number	External communication error during socket create.	• Verify that the UCTA ethernet connection (at the back of the UCTA) is connected to the DxC hub. • Shut down and restart the Integrated Workstation, refer to System Shutdown/Restart. • If the error continues, contact Beckman Coulter Support Center for additional information.
0x08001003 13	UCTA: External Communication Error	**UCTA: XCOM error during connect Message ID:** 0x08001003 **Return Code:** return code **PNA Errno:** error number	External communication error during connection.	• Verify that the UCTA ethernet connection (at the back of the UCTA) is connected to the DxC hub. • Shut down and restart the Integrated Workstation, refer to System Shutdown/Restart. • If the error continues, contact Beckman Coulter Support Center for additional information.
0x08001004 13	UCTA: External Communication Error	**UCTA: XCOM error during set socket Message ID:** 0x08001004 **Return Code:** return code **PNA Errno:** error number	External communication error during socket setting.	• Verify that the UCTA ethernet connection (at the back of the UCTA) is connected to the DxC hub. • Shut down and restart the Integrated Workstation, refer to System Shutdown/Restart. • If the error continues, contact Beckman Coulter Support Center for additional information.
0x08001005 13	UCTA: External Communication Error	**UCTA: XCOM error during I/O ctl Message ID:** 0x08001005 **Return Code:** return code **PNA Errno:** error number	External communication error during input/ouput control.	• Verify that the UCTA ethernet connection (at the back of the UCTA) is connected to the DxC hub. • Shut down and restart the Integrated Workstation, refer to System Shutdown/Restart. • If the error continues, contact Beckman Coulter Support Center for additional information.
0x08001006 13	UCTA: External Communication Error	**UCTA: XCOM error during bind Message ID:** 0x08001006 **Return Code:** return code **PNA Errno:** error number	External communication error during binding.	• Verify that the UCTA ethernet connection (at the back of the UCTA) is connected to the DxC hub. • Shut down and restart the Integrated Workstation, refer to System Shutdown/Restart. • If the error continues, contact Beckman Coulter Support Center for additional information.

Table 13.10 Error Messages and Corrective Actions *(Continued)*

ID Class #	Pop-up	Event Log	Description	Corrective Action
0x08001007 13	UCTA: External Communication Error	**UCTA: XCOM error during listen Message ID:** 0x08001007 **Return Code:** return code **PNA Errno:** error number	External communication error during listening.	• Verify that the UCTA ethernet connection (at the back of the UCTA) is connected to the DxC hub. • Shut down and restart the Integrated Workstation, refer to System Shutdown/Restart. • If the error continues, contact Beckman Coulter Support Center for additional information.
0x08001008 13	UCTA: External Communication Error	**UCTA: XCOM error during select Message ID:** 0x08001008 **Return Code:** return code **PNA Errno:** error number	External communication error during selection.	• Verify that the UCTA ethernet connection (at the back of the UCTA) is connected to the DxC hub. • Shut down and restart the Integrated Workstation, refer to System Shutdown/Restart. • If the error continues, contact Beckman Coulter Support Center for additional information.
0x08001009 13	UCTA: External Communication Error	**UCTA: XCOM error during accept Message ID:** 0x08001009 **Return Code:** return code **PNA Errno:** error number	External communication error during acception.	• Verify that the UCTA ethernet connection (at the back of the UCTA) is connected to the DxC hub. • Shut down and restart the Integrated Workstation, refer to System Shutdown/Restart. • If the error continues, contact Beckman Coulter Support Center for additional information.
0x0800100A 13	UCTA: DxC console Communication Failure (Alive Task) Error Status: <value>	**UCTA: Console to UCTA communications failure (alive task) Message ID:** 0x0800100A **Error Status:** error status	Alive msg failure. UCTA is not communicating to DxC console. UCTA LED has code “FA”.	• Verify that the UCTA ethernet connection (at the back of the UCTA) is connected to the DxC hub. • Shut down and restart the Integrated Workstation, refer to System Shutdown/Restart. • If the error continues, contact Beckman Coulter Support Center for additional information.
0x08001201 13	UCTA: Sequencer Cycle Buffer Unavailable	**UCTA: Sequencer cycle buffer unavailable Message ID:** 0x08001201	Sequencer cycler buffer locked and unavailable.	• Shut down and restart the Integrated Workstation, refer to System Shutdown/Restart. • If the error continues, contact Beckman Coulter Support Center for additional information.

Table 13.10 Error Messages and Corrective Actions *(Continued)*

ID Class #	Pop-up	Event Log	Description	Corrective Action
0x08001202 13	UCTA: The number Commands have exceeded the Command Buffer size of number	**UCTA: count Commands have exceeded the max buffer size Message ID:** 0x08001202 **Command Count:** number **Command Buffer:** number	Sequence cycler buffer commands is max (2048).	• Shut down and restart the Integrated Workstation, refer to System Shutdown/Restart. • If the error continues, contact Beckman Coulter Support Center for additional information.
0x08001203 13	UCTA: Sub-Sequence time tick not in ascending order	**UCTA: Sub-sequence time tick not in ascending order Message ID:** 0x08001203 **Tick:** number **i-ndex:** number **j-index:** number	Sub-sequence time tick not in ascending order.	• Shut down and restart the Integrated Workstation, refer to System Shutdown/Restart. • If the error continues, contact Beckman Coulter Support Center for additional information.
0x08001602 13	UCTA: Operation Manager Task Detected Invalid Barcode Setup	**UCTA: OMT detected invalid barcode setup Message ID:** 0x08001602 **Error Code:** id	Operation manager detected invalid bar code setup.	• Return to the System Setup Barcode Setup screen and exit to resent the settings. • If the error continues, contact Beckman Coulter Support Center for additional information.
0x08001603 13	UCTA: Offline Sequence Has Timed Out	**UCTA: Offline sequence has timed out Message ID:** 0x08001603	A sequence of motions took longer than expected.	• HOME the UCTA, refer to Home. • Shut down and restart the Integrated Workstation, refer to System Shutdown/Restart. • If the error continues, contact Beckman Coulter Support Center for additional information.
0x08001606 13	UCTA: File Access Error. Filename: number	**UCTA: File open error Message ID:** 0x08001606 **Filename:** number	File open error for the alignment file / mpcvan/data/UCTAalgn.dat.	• If the error continues, contact Beckman Coulter Support Center for additional information.
0x08001607 13	UCTA: File Access Error. Filename: number	**UCTA: File close error Message ID:** 0x08001607 **Filename:** number	File close error. 1=alignment file, 2=UDS file	• If the error continues, contact Beckman Coulter Support Center for additional information.
0x08001608 13	UCTA: File Access Error. Filename: number	**UCTA: File copy error Message ID:** 0x08001608 **Filename:** number	File copy error. 1=alignment file, 2=UDS file	• If the error continues, contact Beckman Coulter Support Center for additional information.

Table 13.10 Error Messages and Corrective Actions *(Continued)*

ID Class #	Pop-up	Event Log	Description	Corrective Action
0x08001609 13	UCTA: File Access Error. Filename: number	**UCTA: File write error Message ID:** 0x08001609 **Filename:** number	File write error. 1=alignment file, 2=UDS file	• If the error continues, contact Beckman Coulter Support Center for additional information.
0x0800160A 13	UCTA: File Access Error. Filename: number	**UCTA: File read error Message ID:** 0x0800160A **Filename:** number	File read error. 1=alignment file, 2=UDS file	• If the error continues, contact Beckman Coulter Support Center for additional information.
0x0800160B 13	UCTA: Cannot Start Run - Alignment Checksum Failure	**UCTA: Cannot start run - alignment checksum failure Message ID:** 0x0800160B	Run did not start; alignment checksum error.	• Shut down and restart the Integrated Workstation, refer to System Shutdown/Restart. • If the error continues, contact Beckman Coulter Support Center for additional information.
0x0800160C 13	UCTA: Cannot Start Run - User Defined Sequence File Not Loaded	**UCTA: Cannot start run - User defined sequence file not loaded Message ID:** 0x0800160C	User Defined Sequence file was not loaded; sequence did not run in UCTA Diagnostics.	• Reload file from DxC in UCTA Diagnostics.
0x0800160D 13	UCTA: File Access Error. Filename: number	**UCTA: File gets error Message ID:** 0x0800160D **Filename:** number	File get error. 1=alignment file,2=UDS file	• If the error continues, contact Beckman Coulter Support Center for additional information.
0x0800160E 13	UCTA: User Defined Sequence File Exceeded Limit of 1024 Lines	**UCTA: User defined sequence file exceeded limit of 2048 lines Message ID:** 0x0800160E	User Defined Sequence file exceeded limit of 2048 lines.	• Create a shorter UDS file. Reload in UCTA Diagnostics
0x0800160F 13	UCTA: Barcode Error	**UCTA: Error restoring barcode default values Message ID:** 0x0800160F **Error Code:** id	Default bar code values were not restored. Error Code: 8=device not ready, 7=bad bar code device number	• If the error continues, contact Beckman Coulter Support Center for additional information.
0x08001610 13	UCTA: Rack ID missing or unreadable	**UCTA: Rack ID is missing or unreadable Message ID:** 0x08001610	Rack ID is missing or unreadable.	• Ensure bar code label on rack is good quality. Reload rack.<link to new bar code on rack>
0x08001611 13	UCTA: Duplicate Rack ID rack #	**UCTA: Duplicate rack ID Message ID:** 0x08001611 **Rack ID:** id	Two racks have the same bar code labels.	• Ensure bar code on each rack is unique.

Table 13.10 Error Messages and Corrective Actions *(Continued)*

ID Class #	Pop-up	Event Log	Description	Corrective Action
0x08001612 13	UCTA: Duplicate Sample ID in Rack rack #	**UCTA: Duplicate sample ID Message ID:** 0x08001612 **Rack ID:** id	Two samples have the same ID.	• Ensure each sample ID is unique. • Reload rack.
0x08001613 13	UCTA: Barcode Error	**UCTA: Barcode sequence error Message ID:** 0x08001613 **Error Code:** id	Sequence error while reading bar codes. 0=racks,1=sample ID, 2=in first pos for sample, 3=expected first pos for sample	• Check bar codes on rack and sample. • Reload rack. • If the error continues, contact Beckman Coulter Support Center for additional information.
0x08001616 13	UCTA: UCTA is not in proper state to receive setup parameters. Setup data will not be saved on the UCTA.	**UCTA: UCTA is not in proper state to receive setup parameters. Setup data will not be saved on the UCTA. Message ID:** 0x08001616	UCTA is in Run state and cannot receive setup parameters. Setup data will not be saved on the UCTA.	• Return to the System Setup screen and exit to resend the settings.
0x0800161a 13	UCTA: Detected a sample rack in positions 1, 4, or 7 on UCTA Sample Wheel. Exit Alignment and remove sample racks from these positions before proceeding with the Sample Wheel Automatic Alignment.	**UCTA: Detected a sample rack in positions 1, 4, or 7 on UCTA Sample Wheel. Message ID:** 0x0800161a. **Exit Alignment and remove sample racks from these positions before proceeding with the Sample Wheel Automatic Alignment**.	UCTA: Detected a sample rack in positions 1, 4, or 7 on UCTA Sample Wheel while running Alignment.	• Exit Alignment and remove sample racks from the positions (1,4, and 7) before proceeding with the Sample Rack Shuttle Alignment.
0x0800161c 13	UCTA: DxI AU is not responding.	**UCTA: DxI AU is not responding. Message ID:** 0x0800161c	DxI AU stopped responding during an alignment procedure.	• User should exit the alignment procedure. • Check the communication status between the DxI AU and the UCTA, refer to DxI Main Menu. • If needed, initialize the DxI instrument, refer to Initialize the DxI System.
0x0800161E 13	UCTA: Alignment value for <device name> point <point> is out of range by <counts>.	**UCTA: Message ID:** 0x0800161E **Alignment value for device name point point is out of range by counts**.	DxI alignment point is out of range.	• Contact Beckman Coulter Support Center for additional information.

Table 13.10 Error Messages and Corrective Actions *(Continued)*

ID Class #	Pop-up	Event Log	Description	Corrective Action
0x08002401 13	UCTA failed to allocate memory for the Status Monitor Message	**UCTA failed to allocate memory for the Status Monitor Message. Message ID:** 0x08002401	Error in memory allocation of Status Monitor MUDD message.	• Shut down and restart the Integrated Workstation, refer to System Shutdown/Restart. • If the error continues, contact Beckman Coulter Support Center for additional information.
0x08002402 13	UCTA: Front Wash Buffer Empty.	**UCTA: Front Wash buffer is empty. Message ID:** 0x08002402	Front wash buffer is low. UCTA will allow 100 more aliquots.	• Load the front UCTA wash buffer, refer to Change the Wash Buffer at the UCTA Unit.
0x08002403 13	UCTA: Rear Wash Buffer Empty	**UCTA: Rear wash buffer is empty. Message ID:** 0x08002403	Rear wash buffer is empty. Found upon powerup if Parameter=1. Found during run if Parameter=2.	• Load the rear UCTA wash buffer, refer to Change the Wash Buffer at the UCTA Unit.
0x08002404 13	UCTA: Pressure is low	**UCTA: Pressure is low Message ID:** 0x08002404	Pressure is out of range. Run will be stopped. Motion Errors may have occurred.	• HOME the UCTA, refer to Home. • If the error continues, contact Beckman Coulter Support Center for additional information.

Table 13.10 Error Messages and Corrective Actions *(Continued)*

ID Class #	Pop-up	Event Log	Description	Corrective Action
0x08002405 13	UCTA: Possible waste container float switch malfunctioned. Please check the float switch, drain pump and waste sump assembly.	**UCTA:** Possible waste container float switch malfunctioned. **Message ID:** 0x08002405. Please check the float switch, drain pump and waste sump assembly.	Possible waste container float switch malfunction. This message is displayed if the waste float switch still indicates full after turning on the drain pump for 18 seconds.	• Wait for the system to go to a Stopped state. • If the liquid level in the waste sump container located on the lower right shelf of the UCTA is low and the float switch is stuck at the top, contact the Beckman Coulter Support Center.If the liquid level is high and the float switch is in the liquid, verify pump operation. Select: — **Utils** — **4 Diagnostics** — **Sample System in the Functional Area** — **UCTA Diagnostics in the Sub Functional Area** — **1 Electro-Mechanical Test** — **Sensors Test** — **Drain Pump** (check box) • Check to see whether the drain pump motor rotates. If not, contact the Beckman Coulter Support Center. Be sure to uncheck the Drain Pump check box when verification is complete. • If the waste sump level does not drop, the drain lines may be blocked. Replace UCTA Drain Pump Tubing. • If the error continues, contact the Beckman Coulter Support Center for additional information.

Table 13.10 Error Messages and Corrective Actions *(Continued)*

ID Class #	Pop-up	Event Log	Description	Corrective Action
0x08002406 13	UCTA: waste draining slow. Please check drain pump and waste sump assembly.	UCTA waste is draining slowly. **Message ID:** 0x08002406. Please check drain pump and waste sump assembly.	UCTA waste is draining slowly. This message is displayed if less than the expected number of aliquots are completed prior to the waste float switch indicating the waste sump is full. The system will continue to run.	• Check to see whether the the waste sump level in the waste container drops. (The waste sump is located on the lower right shelf of the UCTA.) It may take up to 18 minutes for the drain pump to turn on. • When the drain pump turns off, the fluid level in the waste sump should drop near the bottom, which indicates drainage. • If only about half of the fluid drains out of the waste container, Replace UCTA Drain Pump Tubing. • If the error continues, contact the Beckman Coulter Support Center for additional information.
0x08002407 13	UCTA: canopy is open	**UCTA: canopy is open** **Message ID:** 0x08002407	Run cannot start or Run will stop.	• Close the main UCTA canopy.
0x08002408 13	UCTA: Not at operating pressure. It may take up to 30 seconds to reach operating pressure.	**UCTA:** Not at operating pressure. **Message ID:** 0x08002408. It may take up to 30 seconds to reach operating pressure.	After the UCTA is in the Standby or Stopped state for two hours the Air Pump is turned off and the air pressure is bled from the UCTA. It may take up to thirty seconds for the system to reach the operating pressure. During this time, the UCTA will appear unresponsive	• Informational. No action is required.
0x08002601 13	UCTA: Bad sequencer or Invalid parameter	**UCTA: Bad sequencer or invalid parameter Message ID:** 0x08002601	Invalid parameter to motion control.	• The run will be stopped. Restart run. For User Defined Sequence, check for invalid parameter in sequence command.
0x08002602 13	UCTA: Sequencer-Cycler Shared Buffer Unavailable	**UCTA: Sequencer-cycler shared buffer unavailable** **Message ID:** 0x08002602	Sequencer-cycler buffer in not available to sequencer.	• HOME the UCTA, refer to Home. • Press RUN on the UCTA. • If the error continues, contact Beckman Coulter Support Center for additional information.
0x08002603 13	UCTA: Invalid Sequencer Mode	**UCTA: Invalid sequencer mode Message ID:** 0x08002603	Invalid mode for Sequencer.	• No operator action is necessary.

Table 13.10 Error Messages and Corrective Actions *(Continued)*

ID Class #	Pop-up	Event Log	Description	Corrective Action
0x08002604 13	UCTA: Sequencer - Incorrect Buffer Address	**UCTA: Sequencer-incorrect buffer address Message ID:** 0x08002604	Incorrect buffer address for Sequencer.	• HOME the UCTA, refer to Home. • Press RUN on the UCTA. • If the error continues, contact Beckman Coulter Support Center for additional information.
0x08002605 13	UCTA: Corrupted Command Sequence	**UCTA: Corrupted command sequence Message ID:** 0x08002605	Empty Sequencer command.	• HOME the UCTA, refer to Home. • Press RUN on the UCTA. • If the error continues, contact Beckman Coulter Support Center for additional information.
0x08002606 13	UCTA: Cycle Command Exceeded the Sequencer Command Buffer Size	**UCTA: Cycle command has exceeded the sequencer command buffer size Message ID:** 0x08002606	Sequence command buffer too large.	• HOME the UCTA, refer to Home. • Press the RUN button on the UCTA. • If the error continues, contact Beckman Coulter Support Center for additional information.
0x08002607 13	UCTA: Unable to configure barcode reader	**UCTA: Unable to configure barcode reader Message ID:** 0x08002607 **Device ID:** id **Error Code:** id	Bar Code reader serial protocol error during Home or after reset. “device name” is the one for the bar code reader on the UCTA.	• If the error continues, contact Beckman Coulter Support Center for additional information.
0x08003007 13	UCTA: BOOTP reply from the DxC contained no IP address for the DxI AU.	**UCTA: Message ID:** 0x08003007 BOOTP reply from the DxC contained no IP address for the DxI AU.		• Contact Beckman Coulter Support Center for additional information.
0x08003009 13	UCTA: Lost connection to the DxI AU.	**UCTA: Message ID:** 0x08003009 Lost connection to the DxI AU.		• Contact Beckman Coulter Support Center for additional information.
0x0800300B 13		**UCTA: Timeout – request to transfer rack to DxC. Message ID:** 0x0800300B	Timeout waiting 60 seconds for Rack Unload Reply from DxC.	• Verify that the UCTA ethernet connection (at the back of the UCTA) is connected to the DxC hub. • Shut down and restart the Integrated Workstation, refer to System Shutdown/Restart. • If the error continues, contact Beckman Coulter Support Center for additional information.

Table 13.10 Error Messages and Corrective Actions *(Continued)*

ID Class #	Pop-up	Event Log	Description	Corrective Action
0x08003011 13	UCTA: Aliquot scheduler error <error>	**UCTA: Aliquot scheduler error error**	Error codes: 1 - Invalid aliquot ID 2 - Invalid aliquot state 3 - No SV for the aliquot	• Press the UCTA STOP button and HOME the UCTA, refer to Home UCTA. • If the error continues, contact Beckman Coulter Support Center for additional information.
0x08003025 13	UCTA: Offloading Racks, UCTA out of wash solution	**UCTA: Offloading Racks, UCTA out of wash solution** **Message ID:** 0x08003025		• Load a new container of UCTA wash buffer, refer to Change the Wash Buffer at the UCTA Unit. • Reload any incomplete racks. • Press the RUN button to resume testing.
0x08003026 13	UCTA: Offloading Racks, UCTA out of probe lubricant	**UCTA: Offloading Racks, UCTA out of probe lubricant** **Message ID:** 0x08003026		• Load a new bottle of UCTA Auto-Gloss solution, refer to Edit the Volume for the Auto-Gloss Solution at the UCTA Unit. • Reload any incomplete racks. • Press the RUN button to resume testing.
0x08003030 13	UCTA Off-loading Racks: DxI AU unavailable for too long	**UCTA: Off-loading Rack:** DxI AU unavailable for too long **Message ID:** 0x08003030	The DxI is unable to transfer aliquots. No aliquots will be made until action is taken at the DxI to make it ready to receive aliquots. All racks will be offloaded from the UCTA.	• Initialize the DxI system, refer to Initialize the DxI System. • Shut down and restart the Integrated Workstation, refer to System Shutdown/Restart. • Reload any incomplete racks. • Press the RUN button to resume testing. • If error continues, contact Beckman Coulter Support Center for additional information.
0x08003031 13	UCTA Off-loading Racks: No connection to DxI AU	**UCTA: Off-loading Rack:** No connection to DxI AU **Message ID:** 0x08003031	No connection to DxI AU.	• Verify that the UCTA ethernet connection (at the back of the UCTA) is connected to the DxC hub. • Disconnect then reconnect the power connector of the DxC hub. • Shut down and restart the Integrated Workstation, refer to System Shutdown/Restart. • If error continues, contact Beckman Coulter Support Center for additional information.

Table 13.10 Error Messages and Corrective Actions *(Continued)*

ID Class #	Pop-up	Event Log	Description	Corrective Action
0x08003032 13	UCTA: Offloading Racks. Both probes are disabled or obstructed.	**UCTA:** Offloading Racks. **Message ID:** 0x08003032. Both probes are disabled or obstructed.	The UCTA is offloading racks because neither probe is operational. Both probes are either disabled through the DxC setup menu or obstructed.	• Check the setup to see whether the desired probe might have been inadvertently disabled. See UCTA Setup. • Check the UCTA Aliquot Probe(s) for obstruction. • Flush the UCTA Left/Right Aliquot Probes. If obstruction cannot be cleared, Replace the UCTA Aliquot Probes. OR • Disable UCTA Aliquot Probes and continue testing in Independent Mode. See UCTA is Non-operational. • If error continues, Contact Beckman Coulter Support Center for additional information.
0x08005001 13		**UCTA: Received spurious hardware interrupt. Message ID:** 0x08005001	UCTA CPU received an unexpected interrupt.	• Shut down and restart the Integrated Workstation, refer to System Shutdown/Restart. • If the error continues, contact Beckman Coulter Support Center for additional information.
0x1391000E	Cable Down – lost connection to Instrument	**ROUTER:** Cable down detected. (/mpcvan/src/cauman/cau_router.c:1675) **Message ID:** 0x1391000E	This Fatal Error will occur when a network connection has been lost and the computer console cannot communicate with the instrument.	• Make sure Instrument is on. • Check Ethernet cable connection at console, microhub and instrument. • Shut down and restart system. Refer to System Shutdown/Restart. • Contact Beckman Coulter Support Center for additional information.
0x13940013 7	**PVT:** **ERROR:** Insufficient reagent	**PVT:** **ERROR:** Insufficient reagent **File:** *filename* **Line:** *lineno*	Cannot perform the test because there is not enough reagent.	• Load a new PVT reagent cartridge. Refer to Load/Unload Cartridge Chemistries (CC).

Table 13.10 Error Messages and Corrective Actions *(Continued)*

ID Class #	Pop-up	Event Log	Description	Corrective Action
0x13940014 7	**PVT:** **ERROR:** Insufficient sample	**PVT:** **ERROR:** Insufficient sample **File:** *filename* **Line:** *lineno*	Sample Level Sense error while running PVT.	• Pour a fresh PVT sample and restart the test.
0x13940015 7	**PVT:** **ERROR:** Motion	**PVT:** **ERROR:** Motion **File:** *filename* **Line:** *lineno*	A motion error occurred while running a PVT. The test is aborted and no result will be shown.	• Home and restart the test.
0x1394001B 7	**MAINT:** Cannot block the run button	**PVT:** cannot block the run button **File:** *filename* **Line:** *lineno*	Unable to transition to Maintenance. The system may still be in a *Running* state.	• Allow samples to complete before requesting maintenance.
0x1399002D 7	Printing for the system is down. Please reboot the system at your earliest convenience. All requested print jobs will need to be requested again after you have rebooted.	**PRTMGR:** Task: task - error. (filename, linenumber)	Logs that the printing is down in the event log and displays the note to inform the user.	• Shut down and restart the Integrated Workstation, refer to System Shutdown/Restart. • Review and reprint the missing reports.
0x1399002E 7	The printer needs attention. Please check the printer and correct any issues.	**PRTMGR:** The printer needs attention. Please check the printer and correct any issues.	The printer has reported a bad status to the system and needs attention. After the printer error has been corrected, the reports will resume printing.	• Check the printer and correct any issues. If needed, consult the printer manual to determine the corrective action for the specific printer.
0x139C000C 7	Unable to initialize keyboard navigation.	Unable to initialize keyboard navigation for <Subsystem>.	There was a problem initializing the keyboard navigation.	• Contact Beckman Coulter Support Center for additional information.
0x139D0044 7	Data May Be Out Of Order Due to Date/Time Change	**SS:** *date/time* was set backwards from *previous value* to *new value*	Information to user that changing system date or time (specifically backwards) will cause certain data to be out of order.	• No operator action is necessary. Be aware events will be out of order.

Table 13.10 Error Messages and Corrective Actions *(Continued)*

ID Class #	Pop-up	Event Log	Description	Corrective Action
0x139F0036 9	One or more chemistries will timeout soon	**STM:** One or more chemistries will timeout soon	At least one chemistry will require recalibration within 1 hour.	• Check Reagent Load/Calibration screen for calibration information. Refer to Figure 6.18, Reagent Load/Calibration DxC Tab. • Begin to prepare to calibrate required chemistries. Refer to Request a Calibration.
0x139F0037 9	Within Lot Cal Factor Timeout in *hours* **Hours:** **Chemistry:** *chem* **Lot No:** *lot no* **Serial No:** *serial no* **Pos:** *position*	**STM:** Within Lot Cal Factor Timeout in *hours* **Hours:** **(Chemistry:** *chem* **Lot No:** *lot no* **Serial No:** *serial no* **Pos:** *position***)**	The within lot calibration factor for the specified chemistry will timeout soon.	• No operator action is necessary. The next time a fresh cartridge of the specified chemistry is loaded, it will require calibration.
0x139F0038 9	Within Lot Cal Factor Timeout in *hours* **Hours:** **Chemistry:** *chem* **Lot No:** *lot no* **Serial No:** *serial no*	**STM:** Within Lot Cal Factor Timeout in *hours* **Hours:** **(Chemistry:** *chem* **Lot No:** *lot no* **Serial No:** *serial no***)**	The within lot calibration factor for the specified chemistry will timeout soon.	• No operator action is necessary. The next time a fresh cartridge of the specified chemistry is loaded, it will require calibration.
0x139F0039 9	Reagent Cartridge has less than 5 tests left: **Reagent:** *reagent* **Position:** *position* **Lot #:** *lot num* **Serial #:** *serial num*	**STM:** Reagent container has less than 5 tests left: **Reag:** *chem* **Lot No:** *lot no* **Serial No:** *serial no* **Pos:** *position*	Specified reagent cartridge has less than 5 tests remaining.	• Prepare to load another cartridge if another is not already on-board. Refer to Load/Unload Cartridge Chemistries (CC).

Table 13.10 Error Messages and Corrective Actions *(Continued)*

ID Class #	Pop-up	Event Log	Description	Corrective Action
0x139F003A 9	MC Reagent container has low volume: **Reag:** *chem* **Volume:** *volume* **Lot no:** *lot no* **Serial No:** *serial no*	**STM:** Reagent container has low volume remaining: (**Reag:** *chem* **Volume:** *volume* **Lot no:** *lot no* **Serial No:** *serial no*)	MC reagent container is getting low.	• Begin preparations to load another container. Refer to Load/Unload Modular Chemistries (MC).
0x139F0063 9	Perform Access Assay File (AAF) chem update. DxI tests are not runnable.	**STM:** Posted Chem Update Reminder (file: file, line: line)	An error occurred during Chem Update. The user must perform an AAF chemistry update.	• Perform a DxC Chem Update at the Integrated Workstation console. Select: — **System Setup** — **Chem Update** — **AAF** — **OK** • If the DxC Chem Update fails, install the Chem Update CD at the DxI console. Refer to the Software Installation procedure shipped with the CD-ROM. • If the error continues, contact the Beckman Coulter Support Center for additional information.
0x139F0068 7	CTS Tracking Information can NOT be shared between all instruments. When you move a tube to a different instrument, remove its cap. You will be notified when full CTS tracking is restored.	**STM:** TS-CTS Tracking System disconnect detected **Message ID:** 0x139F0068	This error will occur whenever 1 or more instruments is no longer communicating Cut Tube Tracking information with the other networked instruments for any reason. **IMPORTANT** TS-CTS stands for Thick-Stopper, Closed Tube Sampling.	• If a networked system has been shut down and restarted, ignore this message. If not, check power to all Microhubs and network cable connections. • Select Status, then the CTS tab to determine which instrument is no longer connected. Refer to Show the CTS Tracking Status. **⚠ CAUTION** **To make sure a pre-cut tube is not cut a second time, any pre-cut tube moved to the disconnected system should have its cap removed prior to loading.**

Table 13.10 Error Messages and Corrective Actions *(Continued)*

ID Class #	Pop-up	Event Log	Description	Corrective Action
0x139F0069 9	Full CTS Tracking is now available. When you move a tube to a different instrument, it is not necessary to remove its cap.	**STM:** TS-CTS Tracking System reconnect detected	All of the systems that we expect to be networked together are connected (it has recovered from a disconnect state).	• No operator action is necessary. Databases automatically synchronize and caps can be left in place.
0x139F0075 9	There is a Supply Wait condition on the DxI that requires attention.	**STM:** There is a Supply Wait condition on the DxI that requires attention.	The DxI has reported a Supply Wait condition. A reagent may be low, expired, or not loaded; the sample may not be present or may have insufficient volume.	• Go to the DxI console to discover and resolve the condition.
0x139F007B 4	DxI cable down - lost connection.	**STM:** DxI cable down - lost connection	The DxI is no longer communicating with the Integrated Workstation console. The network connection between them may be lost, or the DxI may be turned off or set in a state where it is no longer connected to the Integrated Workstation.	• Check the status of the DxI.
0x139F0083 9	The time to Archive Calibration is expiring in *xx* days. Once it expires, the oldest Archived Calibration report will be deleted for every new Archive Calibration report. Calibration Archive is due.	**STM:** The recommended time to Archive Calibration has passed	The calibration archive on the DxC hard disk will soon be full. When 200 days of calibration data is stored, the system deletes the oldest calibration report to save the new one.	• Archive Calibration Reports

Table 13.10 Error Messages and Corrective Actions *(Continued)*

ID Class #	Pop-up	Event Log	Description	Corrective Action
0x139F0084 9	The Archive Calibration time has expired. Calibration Archive is past due. The oldest Archive Calibration report will be deleted.	**STM:** 200 days have passed since last Calibration Archive. Oldest file will be removed to make room for any new ones.	The calibration archive on the DxC hard disk is full. When 200 days of calibration data is stored, the system deletes the oldest calibration report to save the new one.	• Archive Calibration Reports
0x139F0085 9	ISE Ratio Pump needs replacement in approximately [*specified number*] days or less. Schedule a replacement before the ISE Ratio Pump exceeds 240,000 cycle counts.	**STM:** ISE Ratio Pump must be replaced within [*specified number*] days.	ISE Ratio Pump is approaching 240,000 cycle counts and needs replacement.	• A BCI trained representative needs to replace the ISE Ratio Pump before 240,000 cycle counts. • Contact Beckman Coulter Support Center for additional information.
0x139F0086 9	ISE Ratio Pump has reached or exceeded 240,000 cycle counts. Schedule immediate replacement of the ISE Ratio Pump.	**STM:** ISE Ratio Pump has reached or exceeded 240,000 cycle counts.	ISE Ratio Pump has reached or exceeded 240,000 cycle counts and needs immediate replacement.	• A BCI trained representative needs to immediately replace the ISE Ratio Pump. • Contact Beckman Coulter Support Center for additional information.
0x13A00004 10	Requested Rack Not Loaded **Rack:** *rack ID*	**WLM:** Rack *rack ID* cannot be loaded (*FileName*:*LineNumber*)	The sample rack subsystem was unable to load a rack, usually due to a motion error. The rack will be removed and processing will continue.	• Correct the accompanying motion error and reload the rack.
0x13A0001C 10	Non-programmed samples on rack.	**WLM:** Unprogrammed samps, **Rack:** *rack ID* [p:*PositionSample ID*] [p:*PositionSample ID*] [p:*PositionSample ID*] [p:*PositionSample ID*]	Rack has been loaded with a sample which has not been programmed.	• Make sure the complete sample bar code is readable through the window in the rack. • Check communication with LIS. • Manually program if necessary. Refer to Program Samples Manually.
0x13A00022 10	The QC Database is *xx*% full. Archiving is suggested.	**WLM:** QC DB is *xx*% percent full	QC data base is becoming full. When the database becomes full, the oldest results will be overwritten. To avoid this, archive your QC data.	• Archive QC data so it will not be overwritten.

Table 13.10 Error Messages and Corrective Actions *(Continued)*

ID Class #	Pop-up	Event Log	Description	Corrective Action
0x13A00023 10	QC Database is full. The oldest result has been overwritten.	**WLM:** QC DB is full. The oldest result for **control:** *control name* / **Chem:** *chem name* has been overwritten.	QC database is full. The oldest result for specified control and chemistry has been overwritten. Archiving is suggested.	• Archive QC so that additional data will not be overwritten.
0x13A00024 10	QC Database is full. This result was not saved.	**WLM:** QC DB is full. The result for **control:** *control name* / **Chem:** *chem name* has not been saved	QC database is full and there is no space for the result to be saved. Results may only overwrite data for existing, previously defined control and chemistry information.	• Archive QC data.
0x13A0003F 10	Incomplete set of calibrator levels in rack *rack ID* for the following calibrators: *calibrator name list*	**WLM:** Missing calibrator levels **Rack:** *rack ID* **Calibrators:** *calibrator list* (*File Name*:*Line Number*)	Not all calibrator levels were loaded or were loaded out of order.	• Reload calibrator racks. • Make sure bar codes are readable. Refer to Bar Code Labeling. • If there are 4 calibrators or less, they must all be in the same rack. • If more than 4 levels are required, levels 1-4 must be in the first rack loaded and the next rack loaded must contain the remaining levels.
0x13A00056 10	No sample programming or pending test found for samples in rack #<rack ID>. Rack will be unloaded from <rack location>	**WLM:** No sample programming or pending tests found for sample on rack. **Rack ID:** <rack ID> (<File Name>:<Line Number>)	A rack was loaded with nothing to run. The rack is off-loaded and any previous results are printed.	• Check the sample status. It may have been completed and reloaded. Verify the sample programming. • Could indicate a problem receiving sample programming from the LIS.

Table 13.10 Error Messages and Corrective Actions *(Continued)*

ID Class #	Pop-up	Event Log	Description	Corrective Action
0x13A00057 10	Required levels for calibrator not loaded. Rack will be unloaded from the sample carousel. **Rack:** *rack ID* **Calibrator:** *calibrator name*	**WLM:** Subsequent calibrator levels not loaded for multi-rack calibrator on rack *rack ID* (*File Name*:*Line Number*)	Not all calibrator levels were loaded or were loaded out of order.	• Reload calibrator racks. • Make sure bar codes are readable. Refer to Bar Code Labeling. • If there are 4 calibrators or less, they must all be in the same rack. • If more than 4 levels are required, levels 1-4 must be in the first rack loaded and the next rack loaded must contain the remaining levels.
0x13A00059 10	Scanned barcodes in rack #<rack ID> contain invalid characters. Rack will be unloaded from <rack location>	**WLM:** Barcodes contain invalid chars. **Rack:** <rack ID> [1:<sample ID>] [2:<sample ID>] [3:<sample ID>] [4:<sample ID>]	Sample bar code contains illegal characters.	• Check the sample bar code for illegal characters. Refer to Valid Characters for Entries. • Make sure the complete bar code is visible and there are no smudges or wrinkles. Refer to Bar Code Labeling.
0x13A0007E 10	**Module:** *xxxxxx* is disabled due to a system error. All module functioning has now ceased. When the problem is fixed, enable the module through Instrument Commands.	**WLM:** Received request to disable module: *Module* (*File Name*:*Line Number*)	Specified module has been disabled automatically. This will normally have severity of IM.	• Enable the module under Instrument Commands, Enable/Disable Modules. If the problem continues, it could be a valve or vacuum problem.

Table 13.10 Error Messages and Corrective Actions *(Continued)*

ID Class #	Pop-up	Event Log	Description	Corrective Action
0x13A000CE 10	Samples in rack # <rack number> have barcodes longer than 15 characters. Rack will be unloaded from <rack location> Position Sample ID 1 ID too long 2 ID too long 3 ID too long 4 ID too long	**WLM:** Rack contains samples with barcodes > 15 characters. **Rack:** <rack #> [1:<cup1 ID>] [2:<cup2 ID>] [3:<cup3 ID>] [4:<cup4 ID>]	One or more samples were loaded with bar codes longer than 15 characters.	• Check bar codes on samples in rack.Reload rack.If the error continues, contact Beckman Coulter Support Center for additional information.
0x13A000E4 10	Module: <module name> is disabled due to a stirrer motor error. All module functioning has now ceased. Call Beckman Coulter Technical Support.	**WLM:** Stirrer motor error - module disabled: <module name> (<file>:<line>)	If a motor speed error occurs, the following symptoms are exhibited: • With **Albumin (ALBm)**, **Blood Urea Nitrogen/Urea (BUNm/UREAm)**, **Glucose (GLUCm)**, and **Total Protein (TPm)**, results are suppressed with an Initial Rate Low/ High Error Flag. When three consecutive results are suppressed, the Cup Module is disabled. • With **Creatinine (CREm)**, suppressed results are reported with a Reaction Noise Error Flag. The CREm Cup Module is *not* disabled; it continues to run and reports suppressed results with an error flag. • With **Phosphorous (PHOSm)**, low results are reported. The PHOSm Cup Module is not disabled; it continues to run and reports low results.	• Contact your local service representative to schedule an inspection of the stirrer motor. *DO NOT use the cup module until your service representative has inspected and/or replaced the stirrer motor.* • Review the results reported just prior to the occurrence of these symptoms and respond in accordance with your laboratory policies and procedures. • From Instrument Commands, disable the appropriate cup module.

Table 13.10 Error Messages and Corrective Actions *(Continued)*

ID Class #	Pop-up	Event Log	Description	Corrective Action
0x13A000E8 10	Programming exists at both DxC and DxI consoles for samples in rack # <rack ID>. Rack will be unloaded. Position Sample ID <pos> <sample ID> <pos> <sample ID> <pos> <sample ID> <pos> <sample ID>	**WLM:** Programming at both DxI and DxC on rack <rack ID>. [cup:sampleID] [cup:sampleID] [cup:sampleID] [cup:sampleID]	One or more samples on a rack loaded at the DxI SPU have conflicting programming. Sample programs have been found at both DxI and workstation consoles.	• Check sample programming at the DxI console and revise programming at the workstation console.Reload samples in a rack at the UCTA Load Tray with the rack bar code label to the right. • Press **RUN**.
0x13A00092 10	Sample Programs are too old on rack: *rack number* **Position Sample ID** 1 *sample ID1* 2 *sample ID2* 3 *sample ID3* 4 *sample ID4*	**WLM:** Sample programs too old **Rack:** *rack number* [p: *sample ID1*] [p: *sample ID2*] [p: *sample ID3*] [p: *sample ID4*]	Sample programming exceeds age specified in setup. Usually indicates Host has reused sample IDs and the old information was not cleared from the instrument.	• Clear the existing sample program and reprogram or requery Host. Refer to Clear Samples.
0x13A10012 7	**MAINT:** All or some of the *report name* did not print.	**MAINT:** All or some of the *report name* did not print **File:** *filename* **Line:** *lineno*	All or some of the report did not print.	• Reprint the report.
0x13A20008 7	**MAINT:** Cannot block the run button.	**MAINT:** Cannot block the run button **File:** *filename* **Line:** *lineno*	Unable to transition to Maintenance. Samples may still be running.	• Wait for samples to complete and system to go to *Standby* before requesting Maintenance procedure.
0x13A20015 7	**MAINT:** **ERROR:** Motion.	**MAINT:** **ERROR:** Motion **File:** *filename* **Line:** *lineno*	Motion error observed while performing requested maintenance. Test aborted, no results are available.	• Home and restart the maintenance.

Table 13.10 Error Messages and Corrective Actions *(Continued)*

ID Class #	Pop-up	Event Log	Description	Corrective Action
0x13A20016 7	**MAINT:** **ERROR:** Reagent has not been loaded.	**MAINT:** **ERROR:** Reagent has not been loaded **File:** *filename* **Line:** *lineno*	Maintenance procedure aborted because the reagent has not been loaded.	• Load the reagent and retry the request. Refer to Load/Unload Reagent.
0x13A20019 7	**MAINT:** **ERROR:** Requested rack not loaded.	**MAINT:** **ERROR:** Requested rack not loaded **File:** *filename* **Line:** *lineno*	Maintenance procedure aborted because the requested rack was not loaded.	• The wrong rack was loaded. Check the rack ID and retry. • Make sure the bar code faces to the right when loading.
0x13A50024 6	Host Communication Error, Check Event Log	**HC:** Host Port Communication Error	A problem sending data out the Host port has been encountered. Generated once and not again until the condition is cleared. Will continue to retry.	• Check the LIS for status. • Check cable connections. • Make sure the Host setup parameters have not been changed. Refer to Host Communications, Setup.
0x13A50026 6	Host Communication Line Down, Check Event Log	**HC:** Host line down	A problem sending data out the Host port has been encountered. Generated once and not again until the condition is cleared. Will continue to retry.	• Check the LIS for status. • Check cable connections. • Check the Host setup parameters have not been changed. Refer to Host Communications, Setup.
0x13A50097 6	Host Communication Line Down, Check Event Log. No new messages will be sent. Review Host Comm Setup to re-enable.	**HC:** Chronic Host Port Communications Error	Communications between the console and the Host has been disrupted for a prolonged period of time. Check to see that the Host is operating and responding to messages sent by the console. Check the cable is correctly attached.	• Check the LIS for status. • Go to Host Communications, Setup. Exiting screen will force the system to reestablish communication. • Check cable connections. • Make sure the Host setup parameters have not been changed.

Table 13.10 Error Messages and Corrective Actions *(Continued)*

ID Class #	Pop-up	Event Log	Description	Corrective Action
0x13A70004 7	Instrument not in proper state.	**ICMD:** System Error. Cannot HOME **CAU:** restart may be required **File:** *filename* **Line:** *line number*	System is not in proper state for Homing (usually still Stopping). Must be *Standby/Stopped/Disabled/PVT/Diag/Maint* or *Align*	• Wait for the system to get to *Standby/Stopped/Disabled/PVT/Diag/Maint* or *Align*. • Shut down and restart if necessary. Refer to System Shutdown/Restart.
0x13A70005 7	Instrument not in proper state. or Unable to send Home message.	**ICMD:** Cannot HOME in current state. **File:** filename **Line:** line number	The instrument is not in the proper state for Homing (usually still Stopping). All sides of the instrument must be in *Standby*, *Stopped*, *Disabled, PVT*, *Diag*, *Maint* or *Align*.	• Wait for the system to go to a *Standby*, *Stopped*, *Disabled, PVT*, *Diag*, *Maint* or *Align* state. • Select **Instr Cmd** and **Home**. • If problem continues, shut down and restart the Integrated Workstation. See System Shutdown/Restart
0x13A70006 7	Instrument not in proper state.	**ICMD:** Cannot PAUSE in current state **File:** *filename* **Line:** *line number*	The instrument is not in the proper state to accept a PAUSE command. Only select PAUSE when not already in a *Pausing* state and at least one side of the instrument is running.	• If Pause was previously selected, the System will go to *Standby* automatically. • Select Pause only when at least one side of the system is running. • Shut down and restart if necessary. Refer to System Shutdown/Restart.
0x13A70007 7	Instrument not in proper state.	**ICMD:** Cannot SHUTDOWN in current instrument state. **File:** filename **Line:** line number	System is not in proper state for Shutdown command. Only select Shutdown when all sides of the instrument are in *Standby*, *Stopped*, *Disabled*. Press the STOP button if necessary to obtain these states.	• Wait for all sides of the system to go to a *Standby*, *Stopped*, or *Disabled* state. • Select **Instr Cmd** and **Home**. • If problem continues, press the DxC STOP button. Wait for the motors to release power (about 30 seconds, listen for the sound of the Smart Modules resetting) then HOME the system. • To immediately shut down, press the STOP button and wait to go to the *Stopped* state. Shut down and restart the Integrated Workstation. See System Shutdown/Restart.

Table 13.10 Error Messages and Corrective Actions *(Continued)*

ID Class #	Pop-up	Event Log	Description	Corrective Action
0x13A70010 7	Instrument not in proper state.	**ICMD:** Cannot disable Lower Reagent Carousel in current instrument state. **File:** filename **Line:** line number	CC was not in *Standby*/*Stopped* state when the Lower Reagent Carousel was disabled.	• Wait until the instrument goes to a *Standby* or *Stopped* state before attempting to disable the lower reagent wheel.
0x13A70012 7	Unable to send message to DxC Instrument.	**ICMD:** Cannot <Action> Waste B operation, possible line down sending msg. #916	Unable to send request to DxC instrument. Check to see if the cable is correctly attached.	• Check the connections between the DxC Instrument and the Console Computer. • If the problem continues, shut down and restart the Integrated Workstation. See System Shutdown/Restart.
0x13A70013 7	Unable to send message to DxC Instrument.	**ICMD:** Cannot Enable/Disable CAU modules (<EnDisStatus>), possible line down sending msg. #932	Unable to send status update to DxC instrument. Check to see if the cable is correctly attached.	• Check the connections between the DxC Instrument and the Console Computer. • If the problem continues, shut down and restart the Integrated Workstation. Refer to System Shutdown/Restart.
0x13A8002F 7	Version mismatch. The DxI tests are not runnable. Perform Access Assay File (AAF) chem update.	**SYSCON:** Mismatched version DxC: <version num> DxI: <version num>, AAF chemistry update required.	The user must perform an AAF chemistry update.	• Perform a DxC Chem Update at the Integrated Workstation console. Select: — **System Setup** — **Chem Update** — **AAF** — **OK** • If the DxC Chem Update fails, install the Chem Update CD at the DxI console. Refer to the Software Installation Procedure shipped with the CD-ROM. • If the error continues, contact the Beckman Coulter Support Center for additional information.
0x13AC0008 7	Cannot create socket.	**BOOT:** Cannot create socket	Unable to create a network socket (shutdown didn't complete cleanly).	• Shut down and restart. Refer to System Shutdown/Restart.

Table 13.10 Error Messages and Corrective Actions *(Continued)*

ID Class #	Pop-up	Event Log	Description	Corrective Action
0x13AC000B 7	Select failed	**BOOT:** Select failed	Unable to start.	• Make sure the instrument power is on and restart. Refer to System Shutdown/Restart. Continued errors may indicate an incorrect hardware address.
0x13AC0016 5	Automatic smart module download: *smart modules*.	**BOOT:** Automatic smart module download: *smart modules*	After new software is loaded, new software was downloaded to the indicated smart module.	• No operator action is necessary.
0x13AC0040 7	STOP button pressed. Press HOME to home instrument.	**BOOT:** STOP button pressed **Message ID:** 0x13AC0040	This popup is expected when the Operator presses the STOP button.	• Home the system.
0x13AC0051 4	Instrument Computer Error	**Boot:** Instrument attempted a second ICC (Instrument Control Computer) boot	Likely cause is an Internal Communication issue. Possible bad Ethernet connection causes Instrument to attempt a second boot.	• At the Red Message screen, select Shutdown. • If the problem continues after the instrument has been shut down, contact Beckman Coulter Support Center for additional information.
0x13AD000B 7	Database Version number on disk doesn't match Database Version number.	**Backup/Restore:** Database Version number on disk doesn't match Database Version num **File:** *file* **Line:** *line*	The contents of the backup are from a different version of the Console Software and cannot be restored on this version.	• Use a newer disk if available. Refer to Back Up the System.
0x13AD0013 7	Error copying to external media	**Backup/Restore:** Error copying to external media **File:** *file name* **Line:** *line num*	System cannot identify inserted media. Backup and Restore procedure will abort.	• Make sure the external media is inserted correctly. • Try another media. Refer to Back Up the System.
0x13AD001E 7	Error formatting floppy	**Backup/Restore:** Error formatting floppy (fdformat) **File:** *file name* **Line:** *line num*	Cannot format floppy.	• Make sure the diskette is inserted correctly. • Try another diskette. Refer to Back Up the System.

Table 13.10 Error Messages and Corrective Actions *(Continued)*

ID Class #	Pop-up	Event Log	Description	Corrective Action
0x13AD0020 7	No Contents file on external media	**Backup/Restore:** No TOC on file **File:** *file name* **Line:** *line num*	System cannot identify inserted media. Probably blank or incorrect format.	• Use another media if available. Refer to Back Up the System.
0x13AD0029 7	Backup Type on disk doesn't match request type	**Backup/Restore:** Backup type on disk doesn't match request type **File:** *file name* **Line:** *line num*	Incorrect disk format, probably a different backup.	• Use another disk if available. Refer to Back Up the System.
0x13AD002A 7	Instrument serial number on disk doesn't match Instrument serial number	**Backup/Restore:** Inst serial number on disk doesn't match Inst serial num **File:** *file name* **Line:** *line num*	Trying to restore from disk for a different system.	• Use another disk if available. Refer to Back Up the System.
0x13AD002B 7	S/W Version on disk doesn't match MPC S/W Version	**Backup/Restore:** SW Version on disk doesn't match MPC SW Version **File:** *file name* **Line:** *line num*	The contents of the backup are from a different version of the Console Software and cannot be restored on this version.	• Use another disk if available. Refer to Back Up the System.
0x13AD0040 7	Bad Floppy, replace floppy and try Backup again	**Backup/Restore:** Bad floppy, cannot read from floppy during backup **File:** *file name* **Line:** *line num*	Cannot check backup.	• Repeat Backup with different disk. Refer to Back Up the System.
0x13AD0041 7	Chemistry Version number on disk doesn't match Chemistry Version number	**Backup/Restore:** Chemistry Version number on disk doesn't match Chemistry Version num **File:** *file* **Line:** *line*	The contents of the backup are from a different version and cannot be restored on this version.	• Use another disk if available. Refer to Back Up the System.

Index

Numerics

10% bleach solution, 12-174, 12-178, 12-179, 12-181, 12-204, 12-205
70% isopropyl alcohol, 12-20, 12-35, 12-41, 12-174

A

Absorbance versus time, 4-25
AccuSense glucose sensor
  Connector port, 12-74
  Drain reaction cup for sensor, 12-73, 12-75
  Gasket, 12-74, 12-77
  Prepare prior to replacement, 12-75
  Replace, six-month, 12-76, 12-78
  Stir bar and cup, clean, 12-77
Air filters
  Change, 12-55
Alarm/Annunciator
  See Status Alarm/Annunciator
Alignment
  See UniCel DxC Clinical Systems *Reference Manual*
Alkaline buffer damper assembly
  Adjust fluid level
    Fluid level high, 12-32
    Fluid level low, 12-31
  Check fluid level, 12-33
  Replace alkaline buffer reagent, 12-28
Archive QC Data, 5-20
Aspirate probes cleaning, 12-121
Aspirate syringe volume, 12-99
Auto ORDAC, 10-3
Auto serum index, 10-3

B

Backup, 8-31
  Alignment data, 8-32
  System parameters, 8-2, 8-32
Bar code reader, 11-27
  Hand-held (MC), 11-23
  Reagent, CC, 11-27
  Sample, 11-20
Bar codes, QC, 5-6
Beer's Law, 11-18
BUNm/UREAm Electrode Maintenance, 12-37

C

Calibration
  Acceptance limits, 7-15
  Bypass, 7-13
  Calibrator set point modifications, 7-16
  Enzyme validator, 7-11
  Error detection, 11-17
  Extending calibration time, 7-14
  Failure messages, 7-6
  Formulas
    Endpoint and first-order, 11-8–11-13
    Non-linear, 11-14, 11-15
  Override, 7-12
  Reprint calibration report, 7-18, 7-20
  Request
    Canceling a calibration request, 7-5
  Slope offset adjustment, 7-17
  Status, 7-4
  Within-lot calibration, 7-7
    Designations, 7-9
    Enabling within-lot calibration, 7-7
    Frequency, 7-7
    Limitations, 7-10
Cap piercer
  1-Blade CTS option
    CTS Auto-Gloss
  1-Blade Narrow CTS, 11-20

1-Blade Narrow CTS option, 12-44
1-Blade Thick CTS, 11-20
1-Blade Thick CTS option, 12-44
See CTS
Carousel, 11-19
Cartridge chemistries (CC)
Calibration theory, 11-8–11-17
Spectrophotometric methods, 11-18
Cartridges, 11-27
Reagent, 11-27
CC reagent mixer, clean, 12-35
CC sample mixer, clean, 12-35
CC sample probe, reagent probes and mixers
Automated cartridge chemistry probe cleaning
Load CCWA, 12-196
Chemistry parameters, 10-30
Chemistry print name, defining, 10-24
Chemistry, configuring, 10-23
Clearing chemistries, 10-24
Deleting a chemistry, 10-24
Inserting a chemistry, 10-24
Chloride Electrode tip, Replace, 12-24, 12-47
Closed Tube Sampling
See CTS
CO_2 alkaline buffer reagent straw and line, bleaching
Line #33, 12-182
CO_2 measuring electrode membrane, 12-167
Broken, 12-172
ISE service, 12-47
Remove, 12-168
Replace, 12-170
Wrinkled, 12-172
Configuration, system, 10-17
Constituent code, 5-5, 5-8
Control, 5-6–5-13
Bar codes, 5-5
Constituent code, 5-5
Definition, 5-3
Deleting, 5-10
Editing, 5-6
Fields, 5-5, 5-8
File number, 5-5, 5-8
Printing, 5-9
QC chart, 5-15
QC file list, 5-13
QC summary, 5-14
Copy to disk feature, 5-18
Critical ranges, 10-11
Critical result rerun, 4-22, 10-6
CTA cleaning
Aliquot probe, 12-27
Auto-Gloss dispense station, 12-27
Probe wash station, 12-27
CTA maintenance (as-needed)
Aliquot probe flushing, 12-224
Replacing
Aliquot probe, 12-82
CTS (Closed Tube Sampling)
1-Blade Narrow CTS option, 11-20
1-Blade Thick CTS option, 4-13, 11-20
Blade count, 8-3
CTS Auto-Gloss, viii, 8-21
CTS Count, 8-3
CTS Tracking, 8-6
4-Blade Foil CTS option, 4-13
CTS Auto-Gloss, 12-16
CUPs lamp and sensor calibration, 12-36
Cuvette reaction system, 11-29
Cuvette washer probe, inspect
Blocked probe, 12-200
Cuvette washing
Wash station, 11-31
Cuvette wiper
Reinstall, 12-19
Replace, 12-17
Cuvettes
Automated wash all cuvettes, 12-201

D

Data storage, 4-20
Results, 4-20
Sample programs, 4-20
Date/time setup, 10-4
Deleted results, 8-26
Deleting, 5-17
Control, 5-10
Critical result rerun, 4-22
QC data point, 5-17
Demographics, 10-5
Diagnostics, 12-99
Dilution factor, 4-15
DL2000, 10-22
Drugs of abuse testing (DAT), 11-17
DxC Load Area, 9-9
DxC Sample
Handling system, 9-9

DxI online help feature, xxxviii

E

Editing
  Control, 5-6
EIC, 12-174
EIC ports, flushing, 12-174–12-181
  ISE service, 12-175
Electrolyte injection cup (EIC), 11-24
Enable/disable modules, 8-11, 8-12
Enzyme validator, 7-11
Enzyme verification, 11-17
Error detection
  See Calibration
Error detection limits, 10-39
Event log, 8-25
Exit check criteria, 10-43, 10-44
Expanded user defined chemistry feature, 10-46
Extinction coefficients, 10-42

F

Failure messages, calibration, 7-6
File number, 5-5, 5-8
Flow cell (ISE), 11-25
Flow cell tubing #23, 12-188
Flow cell tubing #27, 12-188
Flow cell tubing #35, 12-188
Flow cell, flushing
  ISE service, 12-187–12-190

H

Hand-held bar code reader, 6-35
Hazards, vii
Home, 8-8
Host communication, 10-22
Host specifications
  See Host Interface Specifications Manual (PN A16150)
Hydropneumatic system, 11-32
  Status, 8-5

I

ICS/smart module status, 8-6
Immediate reporting, 10-6
Independent operating modes, 9-1
ISE drain cleaning, six-month
  Drain top, 12-185
  Drip screen, 12-185
  ISE service, 12-184, 12-187
ISE module, 11-22
ISE reference solution, 12-68, 12-79

K

Keyboard, 10-16

L

Labels, xvii–xxiii
Laboratory information system (LIS), 4-1
Language/keyboard, selection, 10-16
Levey-Jennings, 5-15
LPIA (large particle immuno assay)
    module, 10-28, 10-32, 11-29, 11-30

M

Maintenance, 8-25
Manual assignments, 4-11
Math models, 10-32, 11-14, 11-15
Mixer wash cup, 11-29
  Reagent, 11-29
Modem, 8-31
Modular chemistries (MC)
  Basic components, 11-26
Modular reagents
  Check levels, 12-8, 12-16
Modules, 11-26
Modules, enable/disable, 8-11

N

No Foam, 12-16

O

Offload track, 9-9
Operating process, 11-7
Operator control devices
  Keyboard, 11-36
  Monitor, 11-36
  Push-button controls, 11-36
    Access control buttons, 11-39
    CTA control buttons, 11-38
    DxC control buttons, 11-38
ORDAC, 4-16
  Auto ORDAC, 10-3

Manual, 4-16

P

Panels, 10-7
Patient results
Critical results rerun, 4-22, 10-6, 10-11
Pause, 8-9
PHOSm, cleaning precipitate
Protein precipitate, 12-198
Photometer assembly, 10-32
Potassium and calcium electrode tips
Replacing, six-month
ISE service, 12-69
Removing/installing, 12-67–12-73
Power Subsystem Status, 8-4
Precautions, x–xvii, 5-6
Preparing test samples
Sample containers, 4-2
Prime, 8-20
Printers, 10-17
Printing, 4-23, 5-9
Control, 5-10
QC chart, 5-15
QC file list, 5-13
Recalled results, 4-23
Priority
Position, 9-9
Priority load, 9-9
Probes, clean, 12-20
Processing parameters, 10-34
Programming samples
Batch, 4-16
Dilution factor, 4-15
Manual, 4-16
Manual assignments, 4-11
ORDAC, 4-16
Rack status, 4-8
Rack/cup position, 4-10
Sample ID, 4-10
Sample status, 4-10
Pushers, 9-10

Q

QAP Disk, 5-18
Quad-ring
BUNm/UREAm electrode, 12-40, 12-160, 12-165
CO_2 measuring electrode, 12-169
Potassium and calcium electrode, 12-48, 12-71, 12-151
Quality Assurance Program (QAP)
Copy to disk feature, 5-18
Quality control (QC), 5-1–5-22
Chart, 5-15
QC action log, 5-17
QC chart, 5-15
QC file list, 5-13
Displaying, 5-13
QC log, 5-16
Summary, 5-14

R

Racks, 11-40
Status, 4-8
Ratio pump, 11-23
Reaction carousel, 11-29
Cuvettes, 11-29
Reaction type, 10-30
Reagent carousel, 11-27
Reagent cartridges, 11-27
Reagent handling system, CC, 11-26
Reagent parameters, 6-49
Loading, 6-49
Reagent status
Sorting reagent status
Days left, 6-38
Tests left, 6-38
Reagent syringe
See also Sample and reagent syringes, replacing three-month
Recalling results, 4-21
Displaying, 4-22
Printing, 4-23
Replicates, 10-8
Reportable range, 10-9
Reports, 10-8
Statistical summary, 4-26
Restore, 5-21, 8-31
Restore and review, 5-21
Results recall, 4-20
Retainer nut, 12-40, 12-48, 12-71, 12-77, 12-151, 12-160
Reviewing, 5-9

S

Sample

Carousel, 11-21
Gate, 9-10
Handling system, 11-19
Replicates, 10-8
Type
Default, 10-4
Sample and reagent syringes, replacing three-month
Checking for bubbles, 12-61, 12-81
Plunger rods, 12-58
Syringe rod replacement, 12-58
Sample syringe, 12-57
Serum index
Auto ORDAC, 10-3
Setup
Screens, 10-2
Shutdown, 8-14, 8-17
Silicone compound, 12-42, 12-165
Smart modules
Status, 8-6
Sodium Azide preservative, x
Special calculations, 10-12
Specifications, system
Elevation, 11-5
Operating temperature, 11-5
STAT, 4-1, 10-6
Statistical summary report, 4-26
Status
Alarm/Annunciator, 10-18
See also System status, 8-1
Status-cycle count, 8-2
Stop print, 8-10
Surfaces and covers, cleaning, 12-203
Symbols, xvii–xxiii
System components
Closed tube aliquotter (CTA) unit
Access sample carousel, 11-36
Aliquot probe, 11-35
Aliquot vessel, 11-35
Automation rack, 11-36
AV queue area, 11-35
CTA sample wheel, 11-34
DxC sample wheel, 11-36
Pick-and-place head, 11-36
Piercing probe, 11-34
Sample aliquotting area, 11-35, 11-36
DxC analyzer, 1-2
System configuration, 10-17
System monitoring, 11-41
DxI codes converted to DxC codes for Integrated Workstation reporting, 11-41
error codes, 11-41
Test reports, 11-42
Test result errors, 11-41
System Status, 8-1

T

Temperatures, 8-2
Theory of operation, 11-6
Total protein cup maintenance, 12-19

U

UCTA cleaning, 12-26
UCTA maintenance (as-needed)
Replacing
Aliquot probe, 12-91
Syringes, 12-98
Sample/Wash Syringe Cleaning, 12-223
UCTA maintenance (twice-monthly), 12-26
UCTA Replace
Pick and Place Head, 12-218
Unload all, 8-13
Update, 10-17
See Version upgrade
User, 10-29
User defined reagents
Configuring, 10-24
Defining, 10-29–10-45
Deleting, 10-24
Inserting, 10-24
Minimum operating requirements, 10-28
Removing, 10-45
Setup, 10-13, 10-29

V

Valid entries, 4-11
Version Information, 10-13
Version upgrade, 10-17

W

Warnings, reagent and calibration status, 7-5
Wash Concentrate II, 12-16
Waste B, pause/resume, 8-11
Wavelength
Primary, 10-32, 10-41
Secondary, 10-32, 10-41

Wheel
See Carousel
Wrist ground strap, 12-24, 12-57

Related Documents

Synchron Clinical Systems *Chemistry Information Sheets* and Synchron Clinical Systems *Chemistry Reference Manual*

- Contain specific chemistry information for the full range of analytes available on UniCel DxC and Synchron Systems.

Synchron Clinical Systems *Performance Verification Manual*

- Provides you with a basic guideline for verifying the performance of your UniCel Integrated Workstation.

UniCel DxC Integrated Workstation Synchron Access Clinical System UCTA Primary Tube *Sample Template*

- This template is used to determine if primary tube samples have at least 264 µL of sample available for testing. This volume of sample is sufficient to run most 20-test general chemistry panels.

UniCel DxC Integrated Workstation *In-Lab Training Manual*

- Used to train laboratory personnel on UniCel Integrated Workstation routine operations.

UniCel DxC Synchron Clinical Systems *Host Interface Specifications*

- Contains the necessary information to interface UniCel DxC Systems to a Laboratory Information System (LIS).

UniCel DxC Synchron Clinical Systems *Reference Manual*

- Contains detailed operating instructions and supplemental maintenance and troubleshooting guidelines for UniCel DxC Systems. It also contains information about the UniCel DxC Systems, such as theory of operation, system specifications and safety information.

www.beckmancoulter.com

BECKMAN COULTER

© 2014 Beckman Coulter, Inc.
All Rights Reserved