Penlon

Inter Med

Sigma Elite Vaporizer
Service Manual

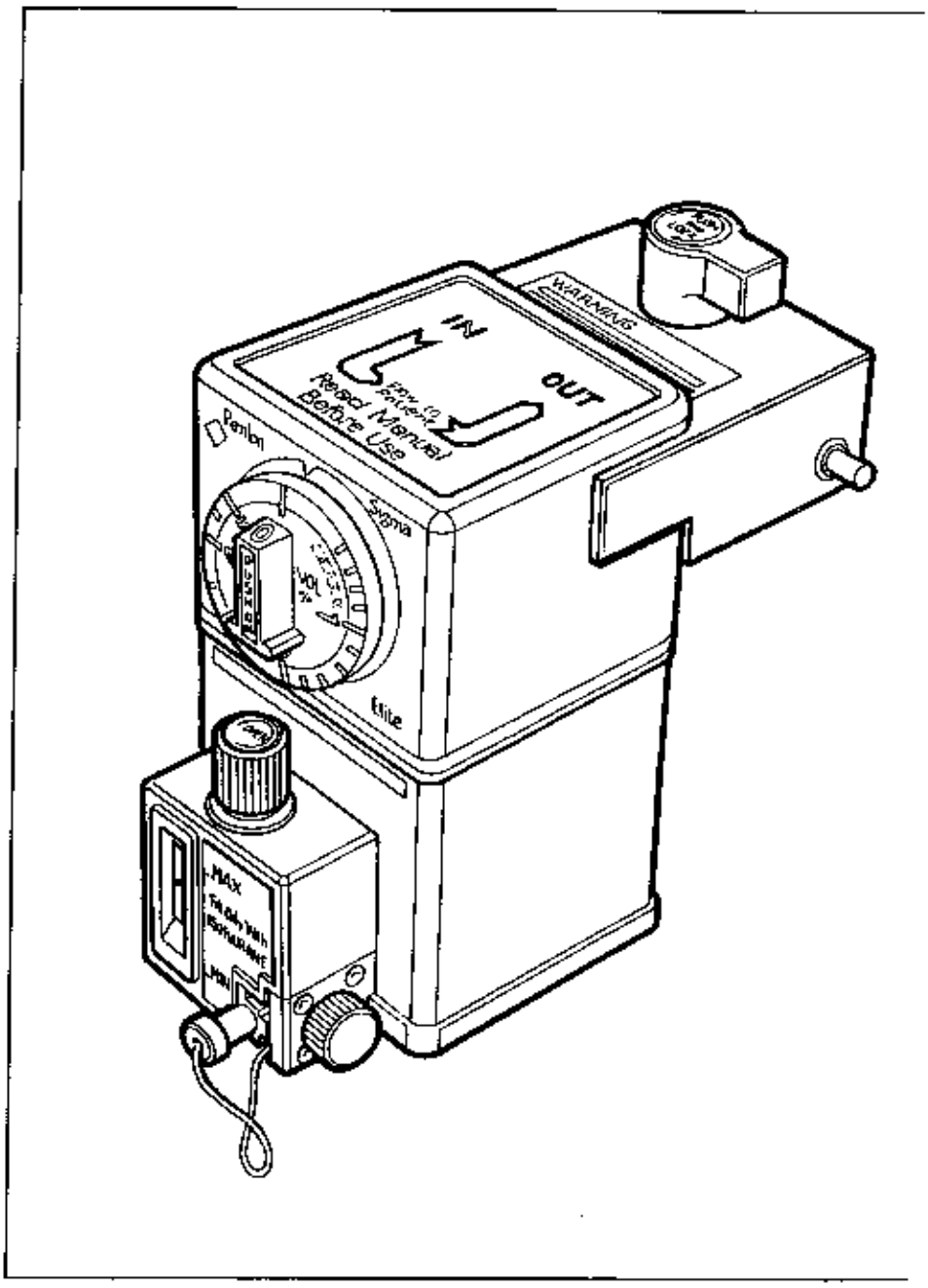

The Company for Anaesthesia Products

IMPORTANT

Servicing and Repairs

In order to ensure the full operational life of the Sigma Elite Vaporizer, servicing by a Penlon-trained engineer should be undertaken periodically.

We recommend that a Function Test should be performed 3 monthly (6 monthly maximum interval), comprising a VISUAL INSPECTION, LEAK TEST and CALIBRATION CHECK.
(Calibration check to be performed using a suitable agent analyser, e.g. a Riken refractometer).
The results of the calibration check must be recorded in the Service Record Book supplied with the vaporizer.
Should the calibration check show the unit to be outside the specified performance requirement (e.g. ± 20% of scale reading) then a Service must be performed.

All vaporizers must be fully overhauled and certain items replaced every 5 years as part of an Overhaul Service, even if performance appears satisfactory. This is a preventive maintenance requirement.
This may be done on site by:
(a) Trained user.
(b) Authorized Penlon agent.
(c) Penlon service engineer.

For any enquiry regarding the servicing or repair of this vaporizer, contact the nearest accredited Penlon agent, or communicate directly with Penlon's Service Department:

Service and Repair Department, Penlon Ltd, Abingdon, OX14 3PH, UK.

Tel: 01235 554222, Fax: 01235 535880.

Always give as much of the following information as possible:

1. Type of equipment
2. Product name/model
3. Serial number
4. Approximate date of purchase
5. Apparent fault
6. Anaesthetic agent / connector block

FOREWORD

This manual has been produced to provide authorized personnel with information on the function, routine performance, maintenance checks and repairs applicable to the Penlon Sigma Elite Vaporizer.

The information contained in the manual is correct at the date of publication. The policy of Penlon Ltd is one of continued improvement to their products. Because of this policy Penlon Ltd reserve the right to make any changes, which may affect instructions in this manual, without giving prior notice.

Personnel must make themselves familiar with the contents of this manual before using the apparatus.

Copyright © BTR, Penlon Ltd 1996. All rights reserved.

Selectatec is a BOC trademark

Quik Fil is an Abbott Laboratories registered trade mark

Document No. PE 196SM

Catalogue No. 54536

CONTENTS

		Page No.
	USER RESPONSIBILITY	1
1.	**WARNINGS AND CAUTIONS**	2
2.	**PURPOSE**	5
3.	**DESCRIPTION**	6
	Gas Flow Schematic	6
3.1	General Description	7
3.2	Concentration Control and Cut-off Mechanism	8
3.2.1	Control Knob Assembly	8
3.2.2	Dial Stop Plate Assembly and Vapour Control Valve	8
3.2.3	Dial Stops	9
3.2.4	Cut-off Mechanism	9
3.2.5	Interlock Mechanism	9
3.3	Temperature Compensator	10
3.4	Wick Assembly	10
3.5	Filler and Level Indicator	11
3.5.1	Agent Specific (Keyed) Filler	11
3.5.2	Screw Cap Filler	11
3.5.3	Agent Level Indicator	11
4.	**SPECIFICATION**	12
4.1	Physical Dimensions	12
4.2	Weight	12
4.3	Capacity	12
4.4	Filling System	12
4.5	Control Dial Scale	13
4.6	Patents	13
4.7	Temperature Range	13
4.8	Flow Range	13
4.9	Bypass Resistance	13
5.	**FAULT FINDING AND TEST**	14
5.1	Concentration Output	14
5.1.1	Wick Assembly	14
5.1.2	Temperature Compensator / Bypass Resistance	14
5.2	Vapour Leakage	14

CONTENTS

6.	**SERVICE PROCEDURES**	15
6.1	Service Policy	15
6.1.1	Servicing Frequency	15
6.2	Equipment	15
6.2.1	Standard Equipment	16
6.2.2	Test Connectors and Equipment	16
6.2.3	Special Purpose Service Tools and Equipment	16
6.2.4	Test Apparatus	16
6.3	Calibration	20
6.3.1	Calibration Check Procedure (before Service)	20
6.3.2	Fault Finding (before Service)	22
6.4	Service Overhaul	25
6.4.1	General Information	25
6.4.2	Dismantling - Lid, Knob, Valve Block, Gas Flow Plate / Wick Assembly	26
6.4.3	Dismantling - Wick, Gas Flow Plate, T.C. Sleeves, Dial Stop Plate	28
6.4.4	Dismantling - Vapour Control Mechanism	30
6.4.5	Dismantling - Filler Block, Vapour Chamber, Coil	32
6.4.6	Dismantling - Agent Specific Filler Block	34
6.4.7	Dismantling - Screw Cap Filler Block	36
6.4.8	Vaporizer Connector Blocks	38
6.4.8.1	Cagemount	38
6.4.8.2	Back Entry	38
6.4.8.3	Back Entry Interlock (additional operations)	38
6.4.8.4	Selectatec (non Interlock)	40
6.4.8.5	Selectatec Interlock (additional operations)	42
6.4.8.6	'Plug In' (Dräger Compatible)	42
6.4.9	Service Overhaul - Reassembly	46
6.4.9.1	Vapour Control Mechanism, and Bypass Mechanism	46
6.4.9.2	T.C Assembly, Wick Assembly, and Gas Flow Plate	48
6.4.9.3	Coil Assembly and Vapour Chamber	50
6.4.9.4	Vapour Control Mechanism, Cam, Needle and Needle Housing	52
6.4.9.5	Dial Stop Plate, Needle Housing Adjustment, Connector Block, and Lid	54
6.5	Calibration Check Procedure (after Service)	56
6.6	Fault Finding (after Service)	58

CONTENTS

7. **SPARE PARTS LISTS** **59**

Covers, label sets, knob assembly, and connector block fixings 60

Wick, gas flow plate, and TC sleeves 62

Bypass plate and bypass control plate 64

Vapour control cam assembly, and dial stop mechanism 66

Interlock lever and shaft 68

Vapour control needle 69

Closing mechanism 70

Vapour chamber coil 71

Agent specific (keyed) filler 72

Screw cap filler 74

Selectatec compatible connector block (including interlock) 76

Back entry connector block (including interlock 78

Cagemount connector block 80

'Plug-in' (Dräger compatible) connector block 81

Service kits 82

Selectatec non-interlock to interlock upgrade kit 86

APPENDIX **89**

Abbott Quik Fil filler block (Service Schedule / Service Procedure / Parts List) 89

Tightening Torque Figures 94

USER RESPONSIBILITY

The Sigma Elite vaporizer has been built to conform with the specification and operating procedures stated in this manual and/or accompanying labels and notices when checked, assembled, operated, maintained and serviced in accordance with the instructions provided. To ensure the safety of this device, it must be checked and serviced to at least the minimum standards laid out in this manual. A defective, or suspected defective product must not under any circumstances be used.

Worn, broken, distorted, contaminated or missing components must be replaced immediately. Should such a repair become necessary, it is recommended that a request for service advice be made to the nearest Penlon Service Centre.

This device and any of its constituent parts must be repaired only in accordance with written instructions issued by Penlon Ltd and must not be altered or modified in any way without the written approval of Penlon Ltd. The user of this equipment shall have the sole responsibility for any malfunction which results from improper use, maintenance, repair, damage or alteration by anyone other than Penlon Ltd or its appointed agents.

A label is fixed to the rear of the vaporizer across the top moulding and vaporizer body bearing the words: 'GENUINE PART. LABEL TAMPERING VOIDS WARRANTY.'

When the top moulding is removed, this label will be damaged beyond repair as permanent evidence of vaporizer disassembly. Replacement labels are only available from Penlon Ltd for authorized service agents against specific vaporizer serial numbers.

USA and Canadian Federal Law restricts the sale and use of this device to, or on the order of, licensed practitioners.

Statements in this manual preceded by the following words are of special significance:

WARNING – ***means there is a possiblity of injury to yourself or others.***

CAUTION – *means there is a possiblity of damage to the apparatus or other property.*

NOTE – *indicates points of particular interest for more efficient and convenient operation.*

1. WARNINGS AND CAUTIONS

WARNINGS

1. *The Sigma Elite vaporizer is to be sold to, and used on the order of, a medically qualified practitioner only.*

2. *Anaesthetic agents are poisonous and inhaling their vapours, even in low (sub–anaesthetic) concentrations may present a health hazard. Care must be taken to avoid spillage of anaesthetic drugs when filling or draining the vaporizer.*

3. *The procedures described herein which involve dismantling the vaporizer must only be performed after the instrument has been drained and dried out.*

4. *Calibration procedures must only be performed with the vaporizer outlet connected to an anaesthetic gas scavenging system designed in accordance with national standards or regulations.*

5. *No oil or grease should be permitted in the vaporizer service area. This applies equally to silicone based lubricants, flammable oil, and grease.*

6. *The Sigma Elite vaporizer is designed for use only with one anaesthetic agent – that which is named on the filler block. Misdosage will occur if the vaporizer is filled with the wrong drug.*
   Keyed filler devices are provided on certain models to meet national and international standards.

7. *The Sigma Elite vaporizer must not be modified or disassembled by any unauthorized person. It should be regularly serviced by a Penlon authorized service agent, trained technician or engineer and by no other person (see section 6).*

8. *The pharmacopoeia name of the drug is used on the label according to BP, USP or Ph EUR. The user is responsible for confirming that any trade name of a drug is equivalent to the registered name.*

9. *If a vaporizer is transported when filled with liquid drug the control must be in the zero position during transport. Movement during transport can result in over–dosage.*
   The vaporizer must be purged at maximum output with 5 L/min flow of oxygen for 2 minutes, and the output checked with an analyser prior to use.

10. *The vaporizer control must be in the zero position during the filling or draining process. Delivered concentrations are inaccurate while the standard filler port is open or the key filler shoe loose. The vaporizer must be upright during filling, to prevent overfilling.*

11. *Vaporizers may malfunction if exposed to excessively high temperatures, e.g. by storage above a radiator. This may permanently damage the vaporizer.*
    Maximum storage temperature: 50°C (122°F)
    Minimum storage temperature: –20°C (5°F).

12. *Vaporizer outputs are sensitive to barometric pressure and a correction factor may be necessary when assessing the output using an analyser, for example at high altitude. Barometric pressure effects are not usually of clinical importance. (See service record book).*

13. *Anaesthetic drugs must be treated as a pharmaceutical product. Liquid should never be drained from a vaporizer into an open container and then reused. Contamination is likely. Always dispose of such drained liquid as a hazardous chemical.*

WARNINGS AND CAUTIONS

CAUTIONS

1. *The instructions given in this manual assume that the service engineer has received adequate training in the practice of servicing anaesthetic apparatus and is familiar with the use of flowmeters, pressure gauges and other laboratory equipment. No details of such procedures are therefore included.*

2. *Each Sigma Elite vaporizer is a tested and calibrated unit. It is most important that components are not transferred from one unit to another. In particular, the service engineer must accept responsibility for ensuring that agent specific items such as labelling, keyed fillers, and control needles are treated as critical devices and that full records of vaporizer servicing are kept.*

   Following any service procedure, a label to indicate to clinical staff that the vaporizer has been serviced must be attached to each unit.

WARNINGS AND CAUTIONS

2. PURPOSE

Penlon Sigma Elite vaporizers are designed for incorporation in the fresh gas supply system of continuous flow anaesthetic machines, directly connected between the flowmeter unit and the common gas outlet of the machine.

They are unsuitable for use within a breathing system 'in circuit' because of the relatively high internal resistance.

Their purpose is the provision of accurate concentrations of anaesthetic drugs in the fresh gas supply. In accordance with the setting of the control knob, when the fresh gas supply is between 0.2 and 15 L/min.

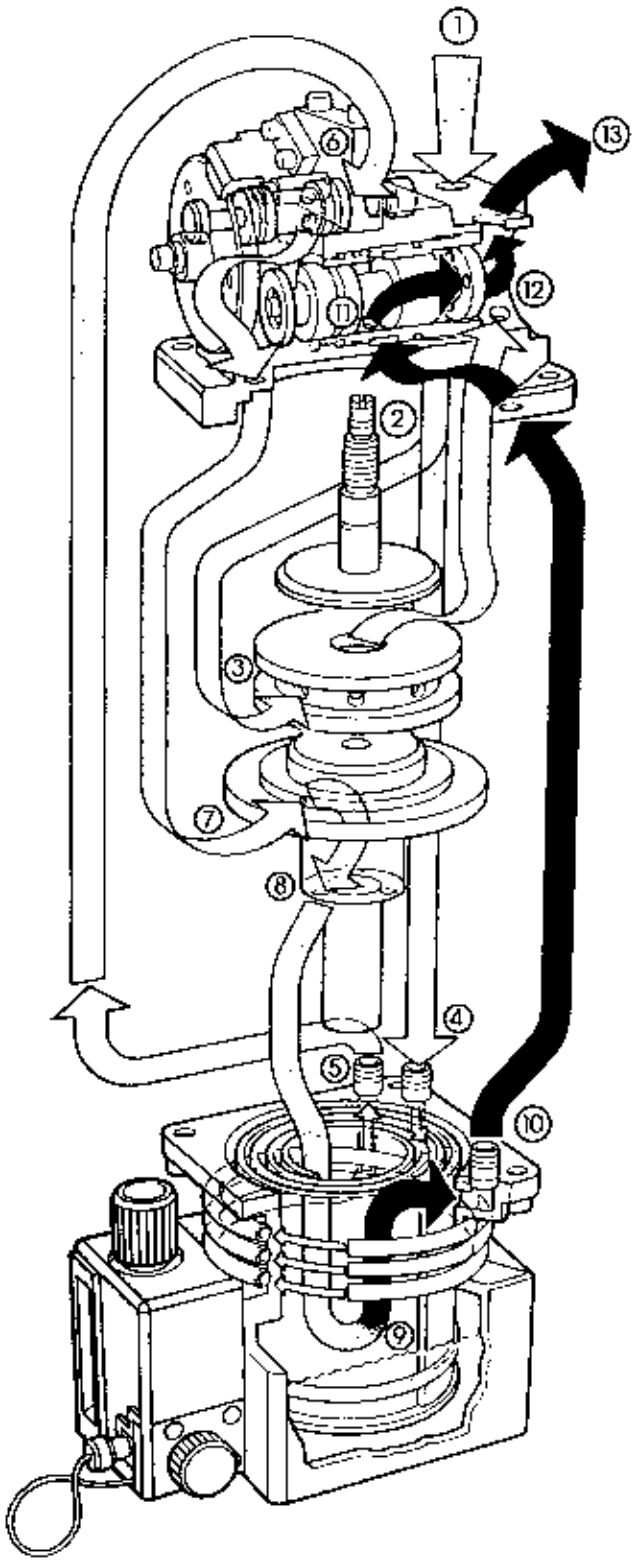

1. Gas flow in
2. Gas path splits into two
3. Bypass flow through bypass plate
4. Into coiled entry tube
5. Out of coiled entry tube
6. Into closing mechanism
7. Into gas flow plate
8. Out of gas flow plate and into wick and vapour chamber
9. Gas now saturated with anaesthetic agent vapour
10. Out of vapour chamber
11. Vapour concentration control needle
12. Vapour and bypass flow join together in mixing chamber
13. Gas flow out

Fig. 1 Gas Flow Path

3. DESCRIPTION

3.1 General Description

NOTE The User Manual (Cat. No. 54535) provides a detailed specification and notes on the installation and operation of the vaporizer. The service engineer should have a copy for reference, in addition to this service manual.

Introduction

The Sigma Elite vaporizer enables the anaesthetist to add a predetermined amount of vapour of a volatile drug to the fresh gas stream supplied to the patient's breathing system.

All anaesthetic agents of a volatile nature have relatively high vapour pressures at normal room temperature so that this saturated vapour must be diluted considerably to produce the concentrations required clinically.

Gas Flow Path

Figures 1 and 2 show that the vaporizer contains two paths for gas flow. One is always open, through the bypass plate. The second, which is open only when the control knob is moved from zero, is routed via the coiled entry tube, the closing mechanism, vapour chamber, and vapour control needle orifice, and joins up with the bypass flow in a mixing chamber adjoining the outlet.

Vapour Chamber

The vapour chamber contains the liquid anaesthetic drug, and is filled through the filler unit to a level shown on the level indicator. The chamber contains a spiral wick assembly.

Gas which enters the chamber has to pass through the narrow passages between the wicks, becoming saturated with vapour before emerging through the vapour control orifice.

The proportion of the total flow which passes through the vapour chamber is determined by the relative resistances of the bypass orifice (which does not vary with control knob setting, but does vary with temperature) and the vapour control orifice (which varies only with control knob setting).

Compensation for total flow variation is achieved by the design of the orifice elements which are precision parts.

Temperature Compensation

Compensation for temperature variation (and therefore changes in vapour pressure, viscosity etc.) is achieved by the movement of a bypass control plate against the bypass orifice, thus changing the area of the orifice, under the influence of a solid state temperature sensitive device. This device is mounted within the vapour chamber so that it is exposed to both gas and liquid temperatures within the vaporizer.

Back-pressure Compensation

Compensation for fluctuating back-pressure on the vaporizer, as produced by the use of IPPV in the breathing system, is provided by the inclusion of a long coiled entry tube prior to the closing mechanism system which prevents reverse flow of vapour from the chamber into the bypass gas flow.

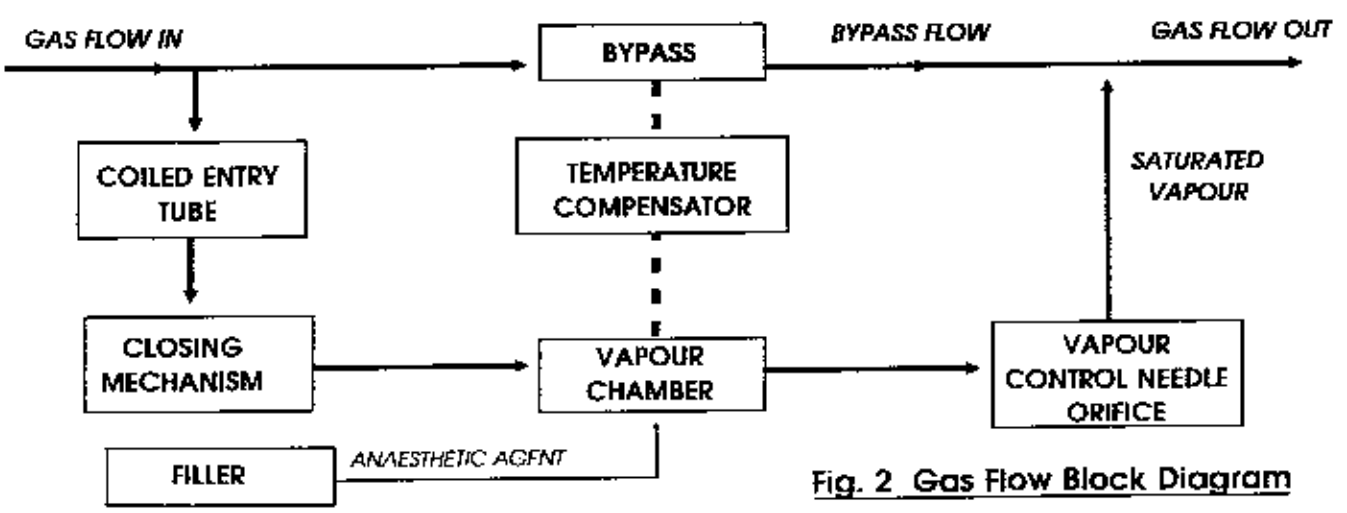

Fig. 2 Gas Flow Block Diagram

DESCRIPTION

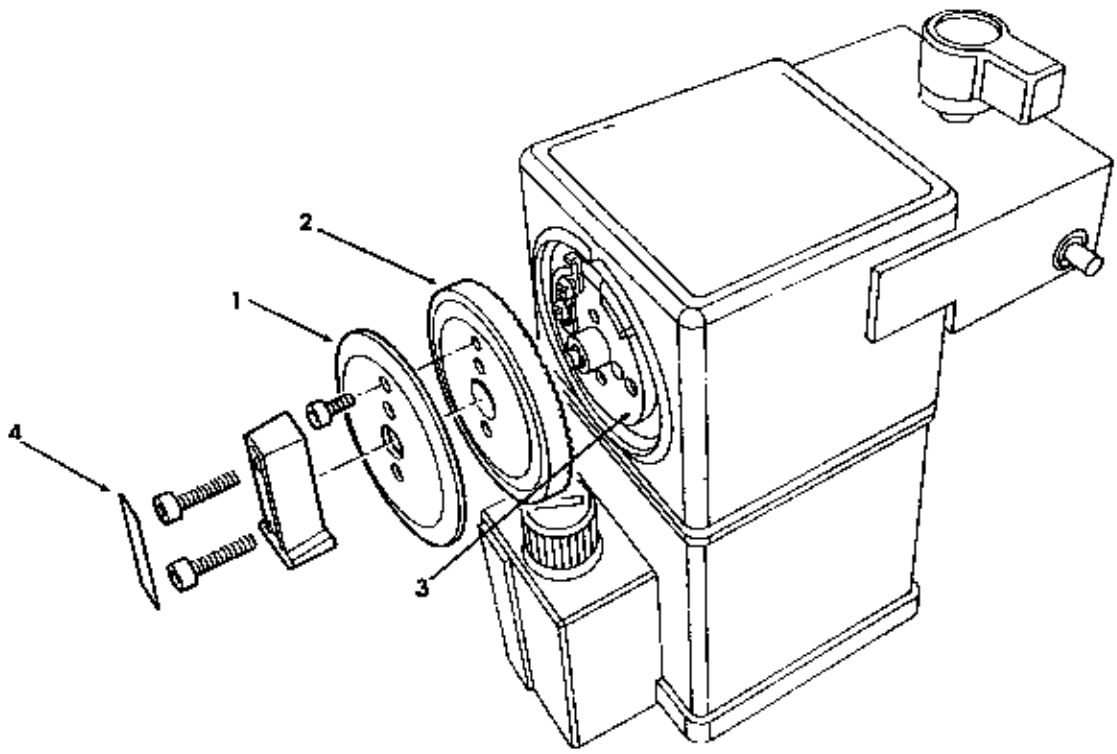

3.2 Concentration Control and Cut-off Mechanism

3.2.1 Control Knob Assembly

The laser engraved dial (1) is etched to match the performance characteristics of the components of the individual vaporizer using its allotted agent.

The dial is held, by a screw, to the dial moulding (2). This is positioned onto the stop plate (3) with pegs. The whole assembly is held to the stop plate by two M4 screws, which are then covered by a self-adhesive label (4). The label is colour coded for the agent to be used with the vaporizer.

3.2.2 Dial Stop Plate Assembly and Vapour Control Valve

When the control knob is pushed in, the stop plate (3) disengages from the zero position dial stop (which prevents knob rotation in the off position), and opens the closing mechanism by pushing on the shaft assembly (see 3.2.4).

As the stop plate is now disengaged from the dial stop it is free to turn anti clockwise and rotates a cam via a drive pin.

A cam follower produces movement of the vapour control needle valve within the needle housing, altering the size of the orifice available for the passage of vapour.

Thus, as the cam rotates, the follower moves against the cam face and the valve moves in or out of the vapour control orifice.

DESCRIPTION

3.2.3 Dial Stops

The dial stop (zero position) (1) operating against the stop plate (2) is adjusted to prevent rotation of the knob assembly in the zero position and is set in position to maintain the correct clearance between it and the stop plate to prevent radial movement of the dial in the zero position.

The click pin (3) is adjusted with a locknut to produce the required 'feel' when rotating the control knob assembly.

The second dial stop (max. dial stop) (4) prevents rotation past the maximum setting shown on the dial.

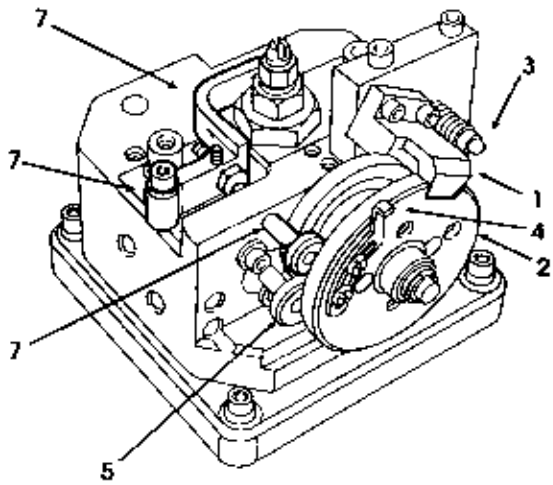

3.2.4 Cut-off Mechanism

When the control knob asssembly is in the zero position, the spring-loaded cut-off valve is closed. This prevents gas flowing into the vapour chamber.

When the control knob assembly is pushed in, the stop plate (2) pushes the closing mechanism shaft (5). This pushes a spring loaded seal assembly off its seat on a spool assembly. Gas is then able to flow into the vapour chamber.

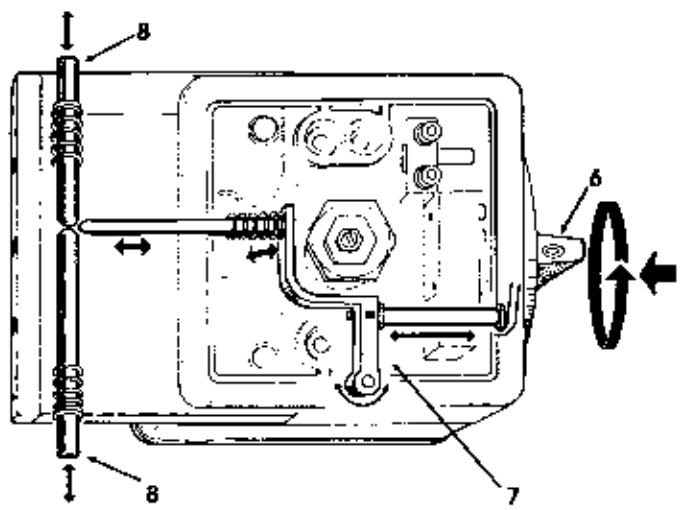

3.2.5 Interlock Mechanism

With two or three interlocked vaporizers on the anaesthetic machine back bar, initial operation of the concentration control dial (6), by pushing on, activates the interlock system (7). The interlock push rods (8) move outwards, ensuring that only that vaporizer can be in use.

The interlock deactivates as soon as the control dial is returned to the zero position.

DESCRIPTION

3.3 Temperature Compensator

This device alters the resistance to the flow of gas passing through a bypass valve.

The temperature sensitive element comprises of a number of low and high expansion sleeves. The high expansion sleeves expand/contract with increase/decrease in temperature, causing the bypass control plate to move away from / towards the bypass plate.

At low temperature the bypass resistance is increased, forcing more gas through the vapour chamber to compensate for the lower vapour pressure of the liquid. At high temperatures the reverse is effected.

3.4 Wick Assembly

The wick assembly (1) consists of a long strip of wick material attached to a metal backing strip, and rolled into a spiral. This forms a single unit cartridge assembly for ease of replacement.

The wick is clamped to the gas flow plate (2) with a seal (3) in between to prevent leakage across the wick.

The wick is not in contact with the outer walls of the vapour chamber (4), but is attached to the gas flow plate (2) with three screws.

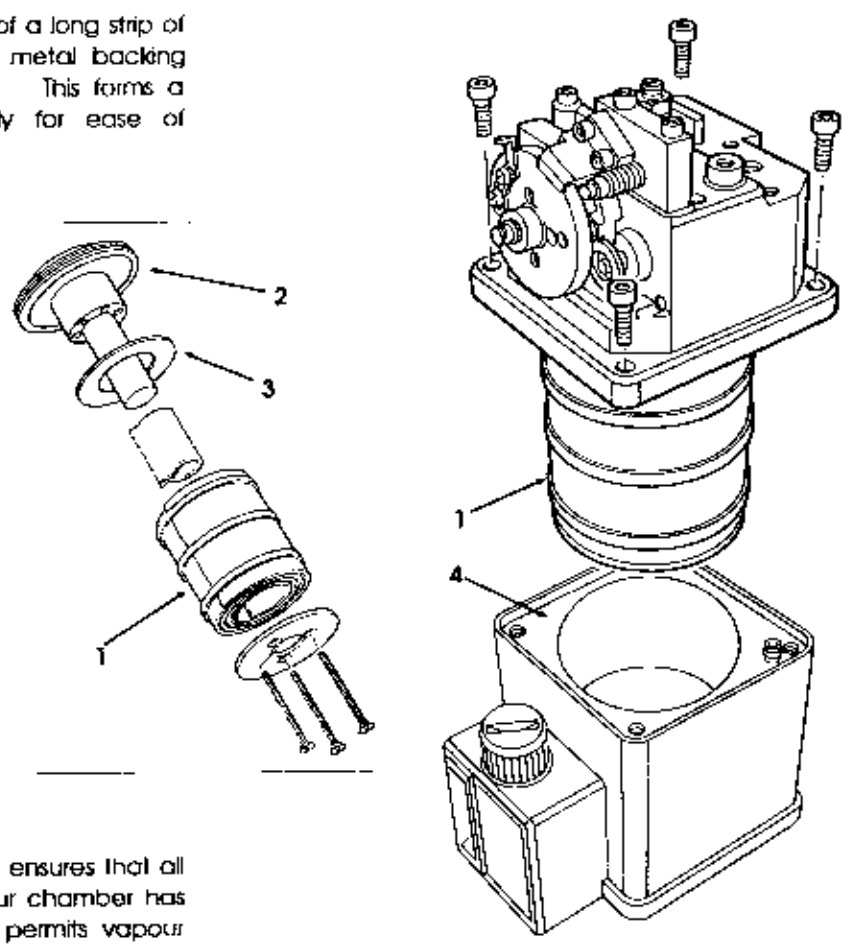

The spiral formation of the wick ensures that all gas passing through the vapour chamber has a long path to follow. This permits vapour saturation to occur.

DESCRIPTION

3.5 Filler and Level Indicator

NOTE *For information on filling and draining the **Abbott Quik Fil** filler block, refer to the Elite user manual supplement, Cat. No. 52665.*

3.5.1 Agent Specific (Keyed) Filler

This unit is designed to be used with a bottle adaptor only. Operating instructions are included in the vaporizer user manual.

Bottle adaptors for each agent type are available – see section 10. Ordering Information, in the user instruction manual.

3.5.2 Screw Cap Filler

This unit is bolted to the vaporizer body and has a screw plug sealed filler opening, with an internally mounted drain screw. The knurled plug has a slot in the top. To drain the vaporizer remove and invert the plug, and use its slot to undo the drain screw anti-clockwise.

Refer to the user manual for full instructions.

3.5.3 Agent Level Indicator

The level indicator is a glass plate held in by a bezel with maximum and minimum fill level marks printed on the agent colour coded filler label.

Provided the vaporizer is upright, with the control knob set at zero, the chamber cannot be overfilled as the design of the air escape ports facilitates air trapping at the maximum safe level.

On agent specific (keyed) filler models, an overfill hole drains excess agent from the filler system.

On screw cap filler models, a drain hole is included in the side of the filler block to drain the filler funnel level should excess agent be tipped into the filler block during filling.

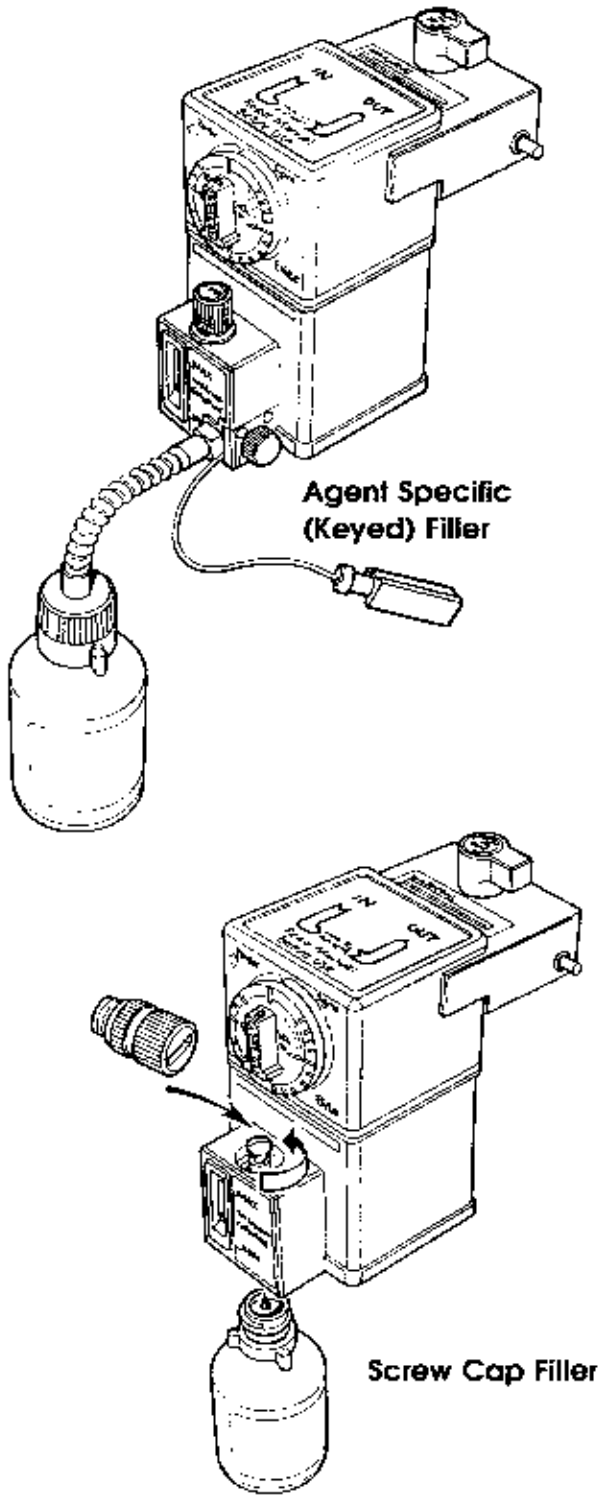

4. SPECIFICATION

4.1 Physical Dimensions

	Width	*Height*	*Depth*
Cagemount	133	195	174
Back Entry	100	195	158
Back Entry with Interlock	120	195	186
Selectatec Compatible	100	217	204
Selectatec Compatible with Interlock	120	217	204
Drager 'plug in' Compatible	100	215	191

Dimensions given above are in millimetres

NOTE *For Screw Cap Filler models depth, subtract 11 mm from the depth dimensions given above.*

4.2 Weight

Approximate weight: 7.3 kg.

4.3 Capacity

Volume at MAX mark	300 ± 10
Volume at MIN mark	50 ± 10

Capacities given above are in millilitres

NOTE *After draining, approximately 35 ± 10 ml of liquid is retained by the wick.*

4.4 Filling System

Agent Specific (Keyed)
To be used with corresponding agent specific filler adaptor, see section 10, Ordering Information, in the user instruction manual.

Screw Top Filler
NOTE *Not available in North America.*

SPECIFICATION

4.5 Control Dial Scale

The control dial is marked as follows:
From 0 to 2% vol. by intervals of 0.2% vol
From 2 to maximum, by intervals of 0.5% vol

The control dial knob bar is marked '0' at zero

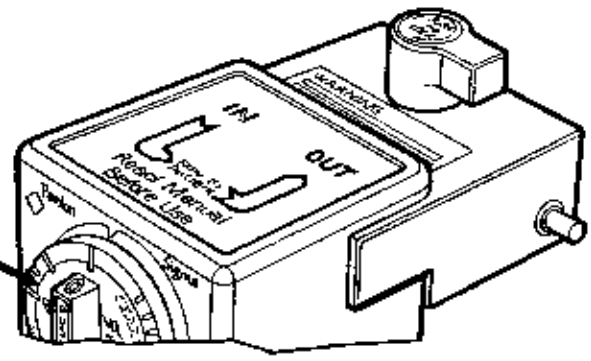

4.6 Patents

The Sigma Elite is protected by UK and foreign patents

4.7 Temperature Range

Operating Temperature Range:
15 to 35°C (58 to 95°F)

Storage Temperature Range:
-20 to 50°C (-5 to 122°F)

Storage in Transit (up to 7 days):
-40 to 60°C (-40 to 149°F)

Before use, function test a vaporizer that has been subjected to temperatures outside the ranges given above.

4.8 Flow Range

Operating Flow Range:
0.2 to 15 litres/min.

See section 7.4.1 in the user instruction manual for output accuracies at extreme conditions

4.9 Bypass Resistance

All vaporizers except Sevoflurane 8%:
Nominal 10.4 cmH_2O at 4 l/min air

Sevoflurane 8% vaporizer:
Nominal 12 cmH_2O at 4 l/min air

5. FAULT FINDING AND TEST

5.1 Concentration Output

For a detailed guide to causes of failure of concentration output see sub-sections 6.3.2 and 6.6.

5.1.1 Wick Assembly

Loss of vaporizer concentrated output can result from poor wick performance, however this should not occur if the vaporizer is drained and filled with fresh agent on a regular basis.

Follow the procedure for filling and draining given in the User Manual.

5.1.2 Temperature Compensator/ Bypass Resistance

Should the vaporizer output differ from the set value the bypass resistance may be out of adjustment.

See section 6.5.

5.2 Vapour Leakage

For a detailed guide to causes of vapour leakage, see sub-sections 6.3.2 and 6.6.

6. SERVICE PROCEDURES

6.1 Service Policy

6.1.1 Servicing Frequency

It is essential that the output of the Sigma Elite should be given a calibration check regularly every 3–6 months, and that the vaporizer should be leak tested, as part of the overall servicing of the anaesthetic machine.

Results should be recorded in the Service Record Book supplied with each vaporizer. Any departure from standard performance or a trend towards predicted failure, should be corrected by a Service, carried out as described in section 6.4.
If the vaporizer is functioning correctly, preventive maintenance can be deferred, but only for a maximum period of 5 years.

All vaporizers must be given a Service and have certain items replaced every 5 years, even if performance appears satisfactory. This is a preventive maintenance requirement.

6.2 Workplace and Equipment

NOTE — *For complete safety when servicing this device, full reference must be made to the WARNINGS and CAUTIONS listed in Section 1.*

WARNING — ***Adequate ventilation of the work area must be provided. During calibration procedures, connect the outlet of the vaporizer to an anaesthetic gas scavenging system designed in accordance with national standards or regulations.***

Environment	servicing must be carried out in a stable temperature environment, preferably with thermostatically controlled/air conditioning to maintain the temperature within 20°C ±1°C.
Gas supply	flow check for bypass resistance measurement must be carried out using air. Calibration after servicing must be carried out using oxygen.
Small tools	as listed throughout the service procedures detailed in this manual, and in the following pages
Gauges, etc.	as listed in the following pages.
Test Rigs	layouts and components are listed in the following pages.

6.2.1 Standard Equipment

Pressure regulator	0 – 400 kPa (0 – 60 psig)
Pressure gauge	0 – 400 kPa (0 – 60 psig)
Pressure gauge	0 – 40 kPa (0 – 300 mmHg)
Pressure gauge or water column	0 – 10 kPa (0 – 100 cm H_2O)
Flow meter unit	0 – 10 L/min
Pressure isolating valve	
Leak detection fluid	
Torque driver	0 – 10 Nm

Gas analyser – The preferred form of analysis apparatus is an interferometer, but with suitable care to check the calibration, the following are also suitable:

- Infrared analyser
- Mass spectrometer
- Molecular absorption meter

The selected analyser should have a sensitivity better than ± 0.1%.

6.2.2 Test Connectors and Equipment (available from Penlon)

Test connection block (MH 636)
Pressure gauge tee connector (34226)
Flexible hose with cagemount female connector end (37019)
Blanking plug with pressure gauge connector (Cagemount male 37018)
Nylon Catheter (52605)
Exhaust tubing (22 mm diameter breathing hose) (57004)

6.2.3 Special Purpose Service Tools and Equipment (available from Penlon)

Needle housing removal/setting tool	408883	Filler shaft housing tool	408880
TC outer tube tool	408886	Sight glass seal compression tool	408874
Bypass adjustment spanner	408871	Bypass locking spanner	408868
Bypass adjustment box spanner	408865	Bypass plate location tool	408892
Interlock bush tool	408889	Interlock push rod setting tool	408894

Analyser mixing chamber (containing diffusion material) MH 561

6.2.4 Test Apparatus

Flow Check for Bypass Resistance Measurement – 6.2.4.1 (Test Apparatus A)
Calibration Check – 6.2.4.2 (Test Apparatus A – adapted for calibration)
Leak Test – 6.2.4.3 (Test Apparatus B)

A schematic layout for each apparatus is given in the following pages.

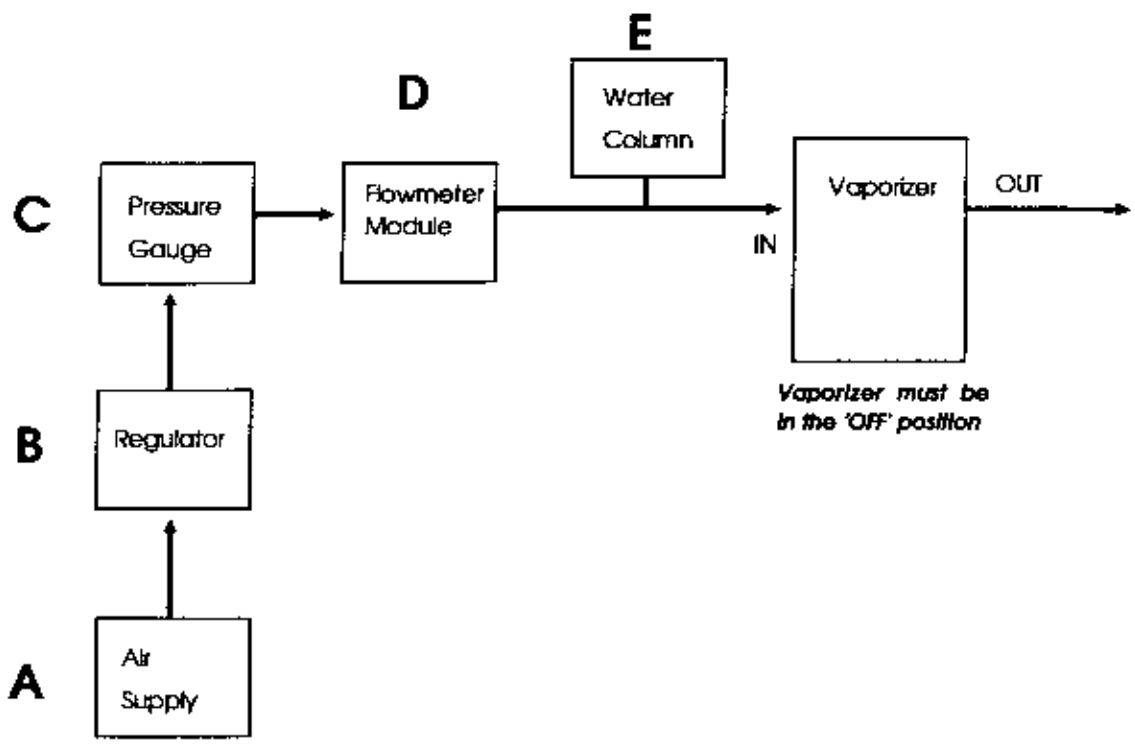

6.2.4.1 Test Apparatus A – flow check for measurement of bypass resistance

A – Air supply	
B – Pressure regulator	0 – 400 kPa (0 - 60 psig)
C – Pressure gauge	0 – 400 kPa (0 – 60 psig)
D – Flow meter unit	0 – 10 L/min
E - Pressure gauge or water column	0 – 100 cm H_2O
- Pressure gauge connector tee (34226)	
- Test connection block MH636	

NOTE *While resistances are being measured nothing must be attached to the outlet of the vaporizer.*

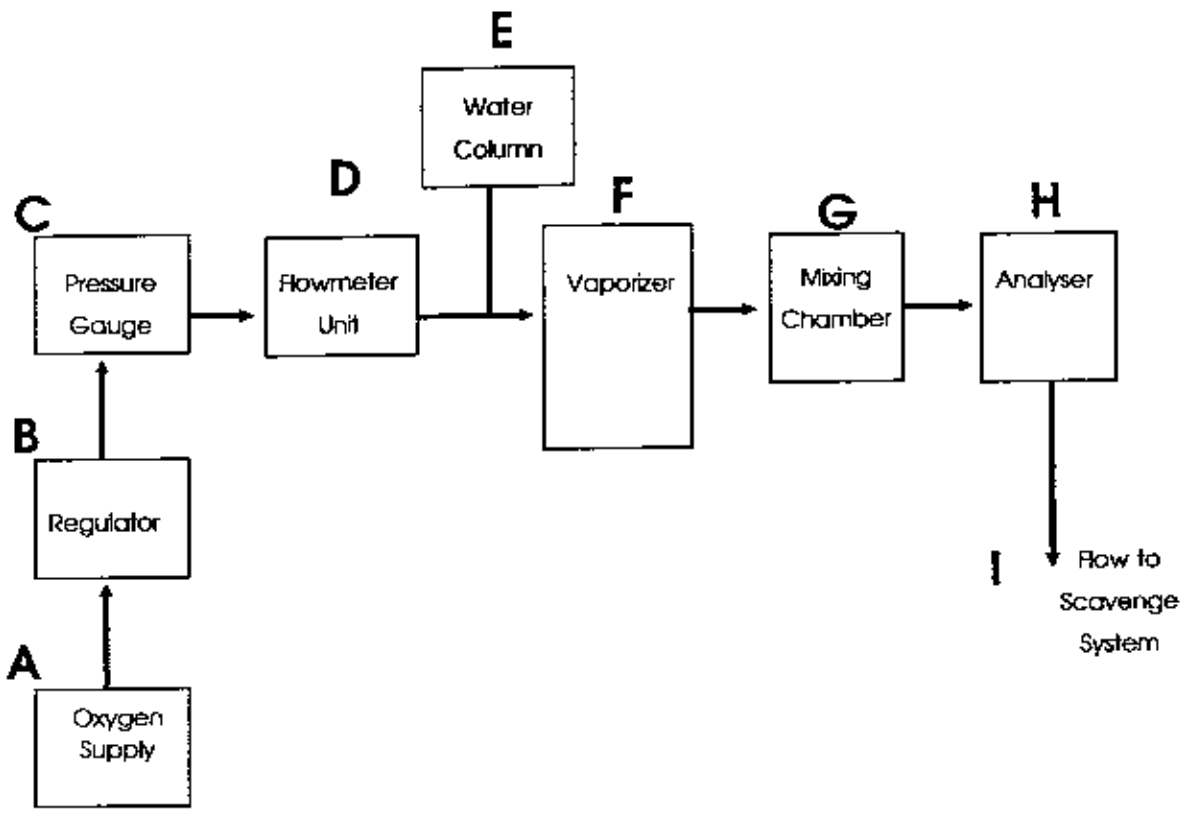

6.2.4.2 Test apparatus A – adapted for calibration

A	– Oxygen supply	
B	– Pressure regulator	0 – 400 kPa (0 – 60 psig)
C	– Pressure gauge	0 – 400 kPa (0 – 60 psig)
D	– Flowmeter unit	0 – 10 L/min
E	– Pressure gauge or water column	0 – 10 kPa (0 – 100 cm H_2O)
F	– Vaporizer	
G	– Analyser mixing chamber (containing diffusion material) MH 561/1	
H	– Analyser	
I	– Exhaust tubing (22 mm diameter breathing hose)	

- Pressure gauge connector tee (34226)
- Nylon catheter (52605) to connect to analyser (G)
- Test connection block MH 636

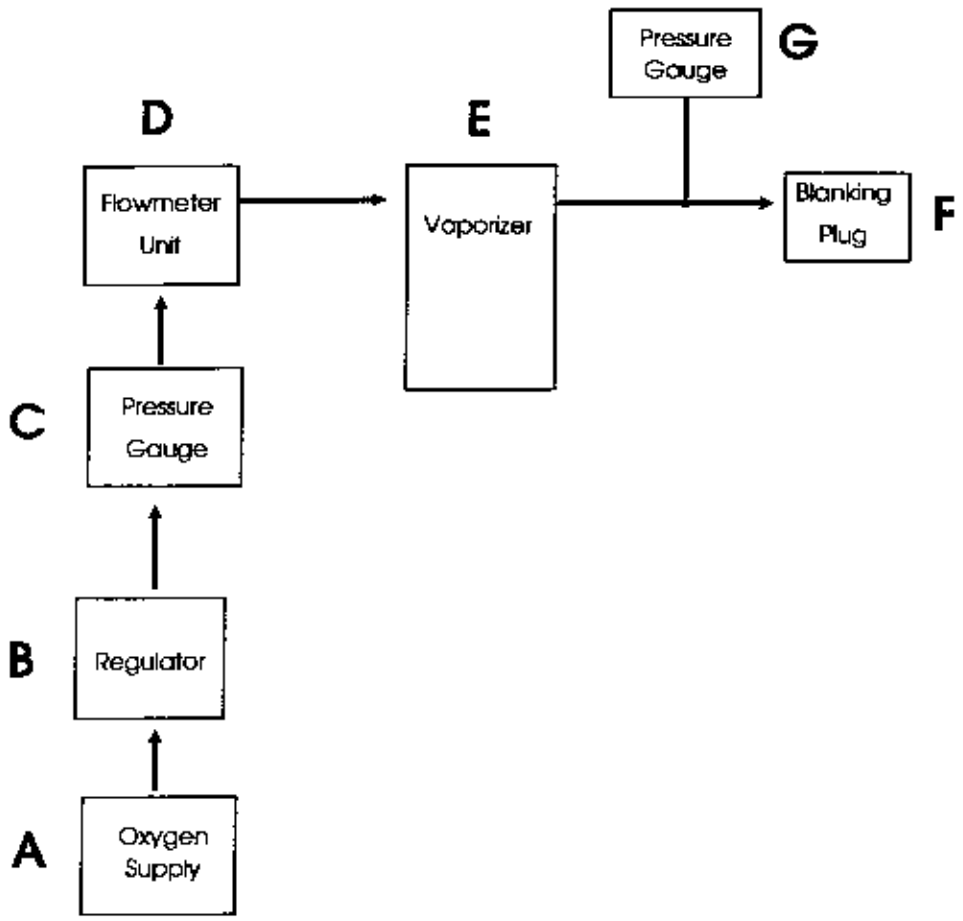

6.2.4.3 Test apparatus B– for leak testing

A – Oxygen supply
B – Pressure regulator 0 – 400 kPa (0 – 60 psig)
C – Pressure gauge 0 – 400 kPa (0 – 60 psig)
D – Flowmeter unit 0 – 10 L/min
E – Vaporizer
F – Blanking plug
G – Pressure gauge 0 – 40 kPa (0 – 300 mm Hg)
– Flexible hose with cagemount female connector end (37019)
– Blanking plug with pressure gauge connector (cagemount male) (37018)

6.3 Calibration

6.3.1 Calibration Check Procedure (Before Service)

Procedures	Equipment/Test Values
NOTE: a) Anaesthetic gas scavenging equipment must be connected during these tests. b) Carry out the tests with the vaporizer rigidly fixed on an anaesthetic machine equipped with a low flow flowmeter.	
1. Drain the vaporizer and discard the contents. DO NOT REUSE. Close the filler system.	
2. Verify the leak tightness of the anaesthetic machine. (See applicable service manual).	
3. Check for leaks from the vaporizer as follows: Attach a pressure gauge to the common gas outlet. Set the vaporizer to half-scale, with the filler closed. Use the low flow flowmeter of the machine to raise the pressure of the whole fresh gas system to 150 mmHg (20 kPa). Observe the reading on the low flow flowmeter. This is the flow required to maintain the system at 150 mmHg (20 kPa) pressure. Confirm the leak is not from the anaesthetic machine by removing the vaporizer and retesting the machine. NOTE: Retest the vaporizer on a test rig if necessary. REJECT ANY VAPORIZER SHOWING EXCESSIVE LEAKS (Refer to section 6.3.2. Fault Finding)	Acceptance value. Leak rate of 100 ml/min Test Apparatus B
4. Fill the vaporizer half full with the correct agent. Allow 4 hours for temperature stabilization. Record the room temperature which must be 20 ± 1 °C.	
5. Measure the output of the vaporizer with an approved analyser. Use oxygen as the carrier gas, at a flow rate of 5 L/min. Take readings with the vaporizer set as follows: 4% vaporizer – 0%, 0.4%, 1%, 3%, and 4% 5% vaporizer – 0%, 0.4%, 1%, 3%, and 5% 7% vaporizer – 0%, 0.4%, 1%, 3%, 5%, and 7% 8% vaporizer – 0%, 0.4%, 1%, 3%, 5%, 7%, and 8%	Test apparatus A with analyser and exhaust system Outputs should be within + 20% of the indicated value for set values at 1% and above, or ± 0.2 %v/v. Output at zero is to be less than 0.03 %v/v.

Calibration Check Procedure (contd.)

Procedures	Equipment/Test Values
6. Record each analyser reading on the Calibration Record test sheet in the vaporizer Service Record Book.	
7. REJECT ANY VAPORIZER SHOWING A VARIANCE OUTSIDE THE TOLERANCE VALUES AND REFER TO FAULT FINDING GUIDE, SECTION 6.3.2. IF LOW OR ZERO OUTPUT OBTAINED AT ALL SETTINGS, REFILL/ CHECK THE LEVEL INDICATOR. FOR REPEATED FAILURE OF THE CALIBRATION TEST, PERFORM A SERVICE ON THE VAPORIZER.	

6.3.2 Fault Finding – Before Service

Fault	Possible Cause	Treatment	References
1. Low or zero output at all settings	(a) Insufficient liquid in chamber	(a) Refill/check level indicator	User Manual
	(b) Leak to atmosphere from vapour chamber	(b) Service, and check during dismantling the condition of:	
		(I) The O ring, sealing face and O ring groove – gas flow plate to top of vapour chamber.	6.4.2, item 10
		(II) The five O rings, the sealing face, and the O ring grooves – filler block to vapour chamber	6.4.5, item 4
	(c) Cut-off mechanism not opening	(c) Service, and check during dismantling, the operation of the closing mechanism shaft.	6.4.4, item 9
	(d) Incorrectly adjusted needle housing	(d) Service, and adjust during reassembly.	6.4.9.5. operation 29
	(e) Bypass resistance out of adjustment	(e) Adjust after Service	6.5
	(f) Wrong agent	(f) Drain and dry	User Manual
	WARNING If halothane has been used in a non-halothane vaporizer, do not use that vaporizer until all traces of halothane are removed. ***To prevent the possibility of malignant hypothermia, the vaporizer must be completely disassembled for cleaning.***		
	(g) Cam wear	(g) Service, and fit new cam	6.4.9.4. item 10
	(h) Leaking sight glass seal	(h) Fit new seal	6.4.6, item 17 6.4.7, item 8
Selectatec Compatible models:			
	(i) Damaged sealing counterbores	(i) Service, and fit new block assembly	6.4.8.4
	(j) Damaged or bent support plate	(j) Fit new support plate.	6.4.8.4, item 13

6.4 Service Overhaul

6.4.1 General Information

Service Schedule

If the vaporizer fails the calibration test a Service Overhaul **must** be carried out.

NOTE A service overhaul must be carried out at a maximum 5 year interval even if performance appears satisfactory. This is a mandatory preventive maintenance requirement.

Preparation

The vaporizer must be removed from the anaesthetic machine for this service.

The vaporizer must be drained of anaesthetic agent and then dried by passing an airflow of 10 L/min through it with the control at maximum setting until all trace of vapour at the output port is eliminated. Check using an agent analyser.

Service Area

These procedures should be carried out in a laboratory room at a temperature of 20 °C ±1°C, not varying by ± 1°C over the test period.

Approximately 1 metre square of bench space is required.

A scavenge system for anaesthetic vapours should be in operation.

A supply of compressed air, dry and clean, at 0.6 bar (8.7 psi) should be available

To prevent components from different vaporizers being transposed, only dismantle one vaporizer in the work area at a time.

O seal Lubrication

Lightly lubricate O seals / O rings with PTFE based, oxygen compatible, lubricant. APPLY SPARINGLY.

Cleaning

Always comply with local health and safety regulations when using solvents to clean components.

Bypass Resistance Measurement

Measure the bypass resistance before and after servicing (see section 6.5).

The vaporizer must be held at a stable temperature for 4 hours before bypass resistance figures are measured.

Record the resistance value at a flow of 4 L/min air.

SERVICE PROCEDURES

Service Overhaul -- Dismantling

6.4.2 Lid, Knob Assembly, Valve Block, Gas Flow Plate / Wick Assembly

NOTE Before dismantling the vaporizer, record the bypass resistance (see section 6.5)

1. Remove the top label (1) and discard.

   Remove the two screws and remove the lid (2).

2. Remove the three screws and detach the connector block (3).

   Discard the two O rings (connector block to valve block).

3. Remove the knob bar label (4), and discard.

   Remove the two screws and the knob assembly (5).

   Remove the dial/scale assembly. The dial can be removed from the dial moulding for cleaning

4. Remove and discard the 'Warranty Void' label (6) fixed across the rear of the top moulding and the vaporizer body.

   Remove the screws holding the top moulding (7).

   Tip the top moulding forward to clear the dial carrier and lift it free of the vaporizer.

5. Remove the four screws securing the valve block (8). Slacken the screws in the sequence A, B, C, D, as illustrated.

   Lift the valve block and wick assembly out of the chamber.

6. Detach the valve block from the gas flow plate and wick assembly (9).

   Discard the chamber sealing ring (10), gas flow plate O ring (11), and the bypass plate O ring (12).

SERVICE PROCEDURES

Fault Finding – Before Service

Fault	Possible Cause	Treatment	References
	(k) Worn or damaged claws on locking shaft	(k) Fit new locking shaft Check also: back bar manifold on anaesthelic machine for damaged locking plate spring.	6.4.8.2. item 6
	NOTE (h) and (k) can be carried out without the need for a full service.		
2. Low output at high setting only.	(a) Contaminated wick	(a) Renew wick as part of Service	6.4.9.2. item 9
	(b) Leaking wick seal washer	(b) Renew as part of Service	6.4.9.2. item 7
	(c) Leak at coiled entry tube	(c) Renew tube/seals as part of Service.	6.4.9.3. items 1, 3, 4, 5
3. Excessive variance in output when an output is selected clockwise, and then anticlockwise	(a) Worn or broken vapour control needle valve spring	(a) Return unit to Penlon, or authorized agent	6.4.4. item 16
	(b) Jamming needle	(b) Service, and check needle action during dismantling	6.4.4. item 20
	(c) Loose cam locking shaft	(c) Service, and check grubscrews	6.4.4. items 4 and 5
	(d) Loose cam drive pin	(d) Service, and fit new cam	6.4.9.4. item 10
4. Zero not obtained	(a) Cut-off O rings leaking	(a) Service, renew seals	6.4.9.1 items 3 and 4
	(b) Leak between seal assembly and spool	(b) Service, and replace seal assembly	6.4.9.1, item 2 Part No. 408021
	(c) Leaks through TC assembly	(c) Service, and check all sealing faces	6.4.9.2
	(d) Worn vapour needle and/or seat	(d) Return unit to Penlon or authorized agent	6.4.4. item 20
	(e) Jamming needle	(e) Service, and check needle action during dismantling	6.4.4. item 20
	(f) Incorrectly adjusted needle and seat	(f) Service, then adjust during reassembly.	6.4.9.5. operation 29

SERVICE PROCEDURES

Fault Finding – Before Service

Fault	Possible Cause	Treatment	References
5. High output	(a) Bypass out of adjustment	(a) Service, then adjust	6.4/6.5
	(b) Bypass control plate contamination	(b) Return unit to Penlon, or authorised agent	6.4.3, item 12
	(c) Bypass gas exit port partially blocked	(c) Clear obstruction during Service	6.4

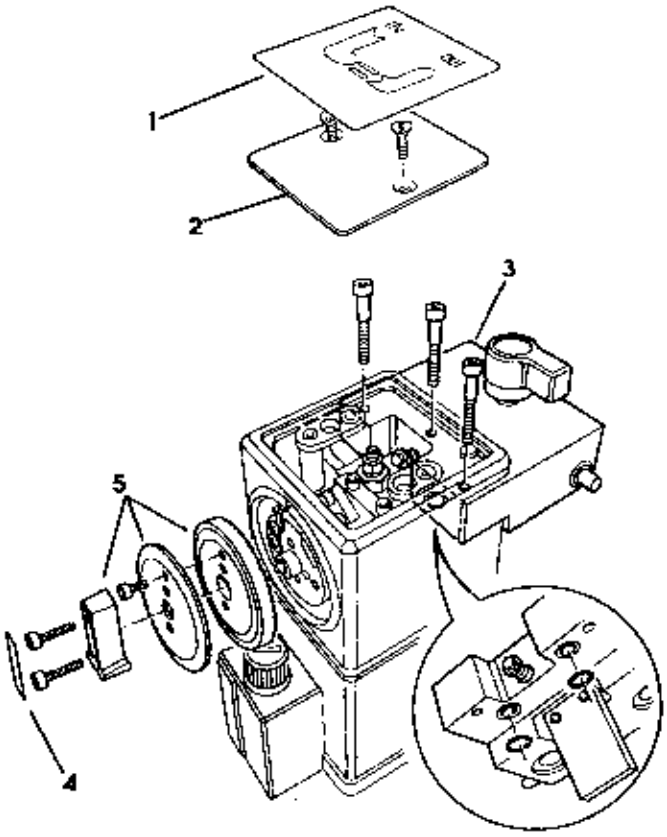
1
2
3
4
5

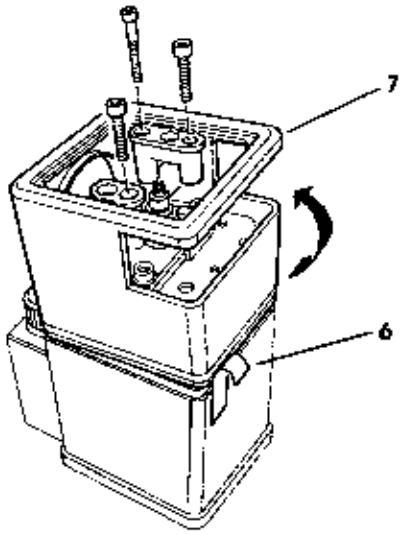
7
6

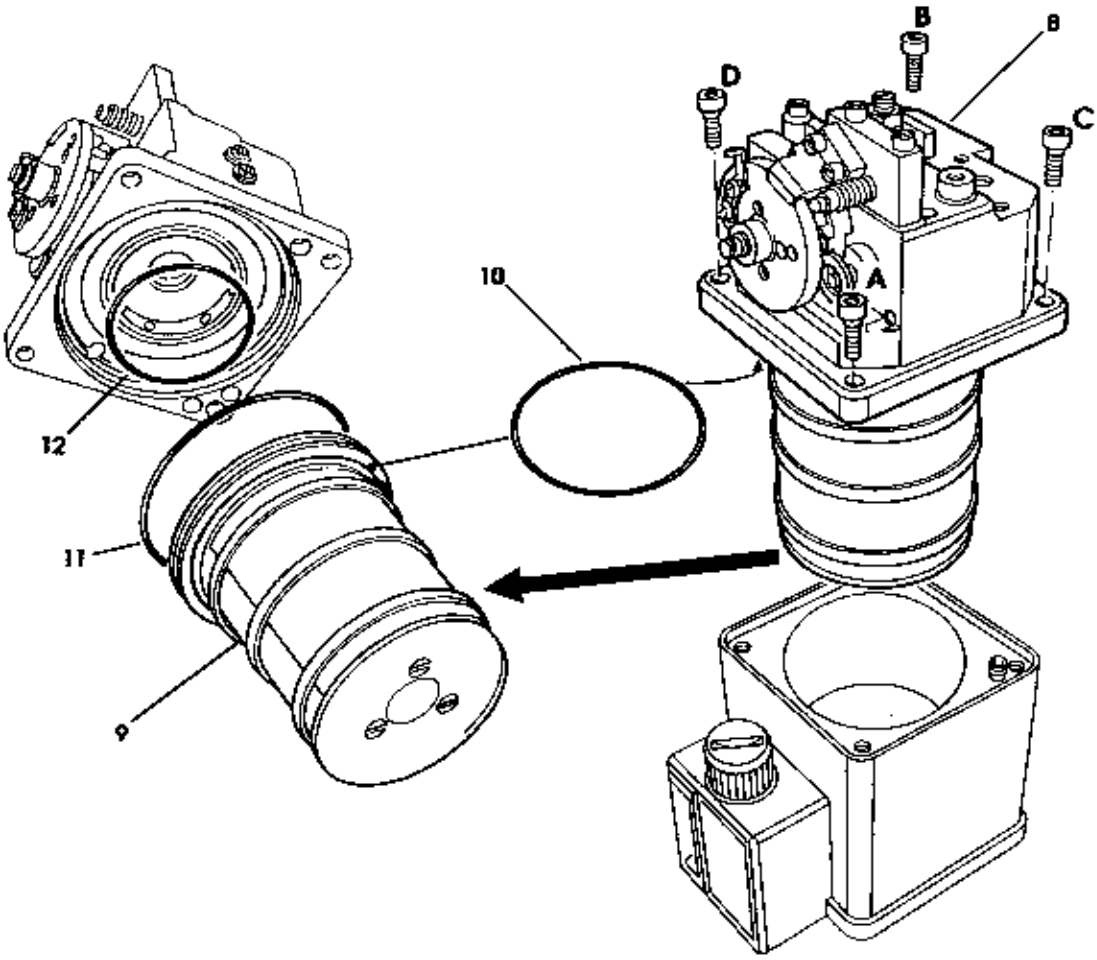
B
8
D
C
A
10
12
11
9

SERVICE PROCEDURES

Service Overhaul - Dismantling

6.4.3 Wick Assembly, Gas Flow Plate T.C. Sleeves, Dial Stop Plate

7. Remove the three screws holding the clamp plate (1), and wick assembly (2). Remove the wick assembly, TC cloth sleeve (3), and wick seal (4), and discard.

8. Use service tool. Part No. 408886 (T.C. outer sleeve tool) to unscrew the T.C. outer sleeve (5) from gas flow plate (6).

   TAKE CARE NOT TO DAMAGE THE PROTECTIVE PLATING

   Remove the spring (7) from the innermost sleeve

   Remove and discard the O ring (8) and remove the spacer (9).

   Disassemble the sleeves (10) from within the T.C. outer sleeve. Care must be taken not to damage mating faces of components. REASSEMBLY WITH DAMAGED COMPONENTS MAY AFFECT VAPORIZER OUTPUT STABILITY.

   Clean all components, place to one side.

8. Remove excess 'threadlock', and unscrew the small and large locknuts and remove the adjuster nut (11).

   Push out the bypass control plate (12) and the bypass plate (13) - tap gently on the bypass control plate (threaded end) with a rubber headed mallet.

   Remove the springs (14) from the valve block and place to one side.

   Remove the two O rings (15) from the bypass plate and discard.

   Remove the O ring (16) from the bypass control plate and discard.

   Unscrew the bypass adjuster shaft (17) from the bypass control plate and remove and discard the O ring (18).

   PROTECT THE FACES OF THE BYPASS PLATE AND BYPASS CONTROL PLATE (ARROWED) TO PREVENT SCRATCHING.

9. Remove the two screws securing the dial stop support plate (19).

   NOTE Do not remove the dial stop.

   Remove and discard the click pin (20).

   Place the support plate, and spring, to one side.

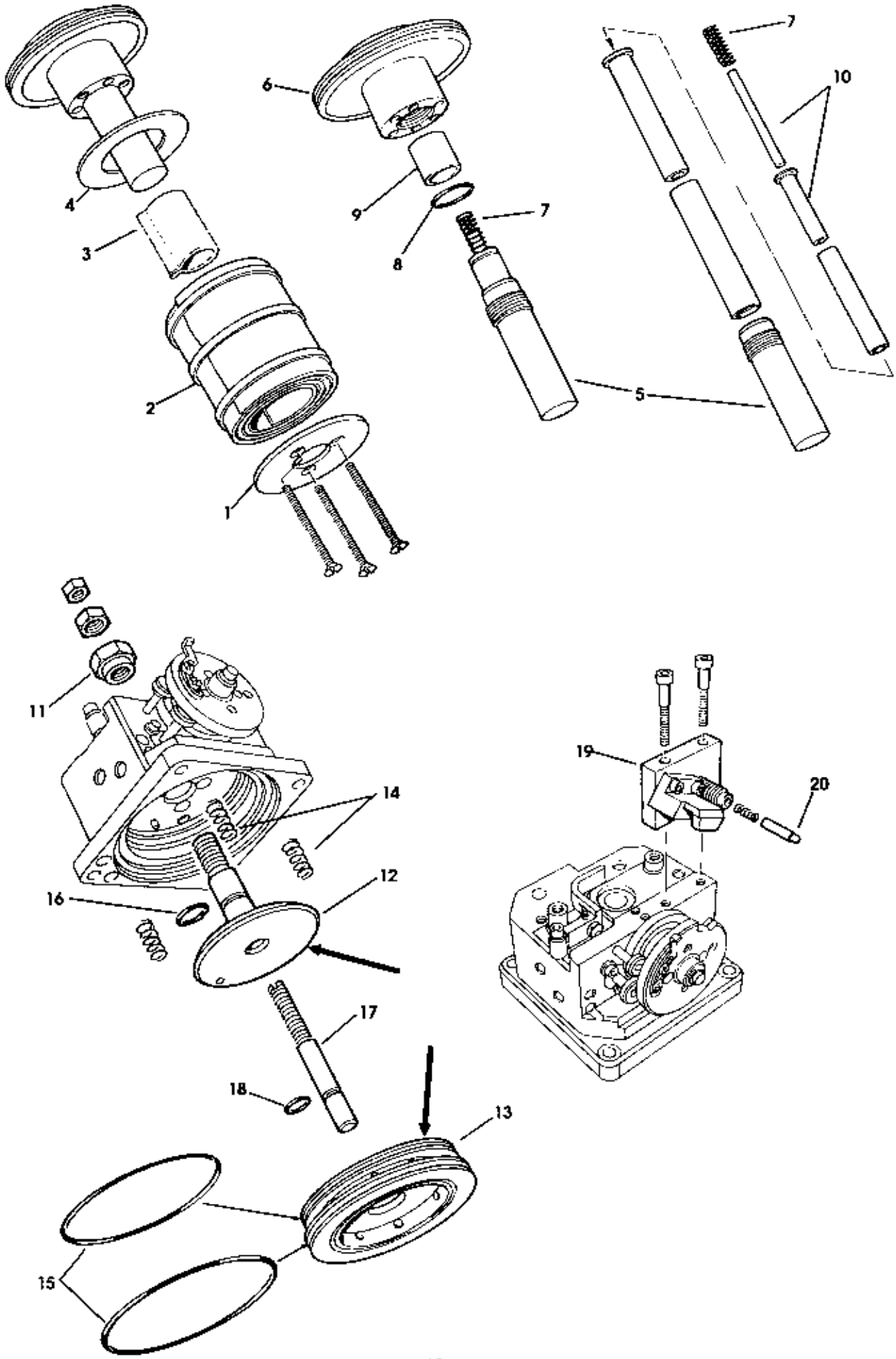
1
2
3
4
5
6
7
7
8
9
10
11
12
13
14
15
16
17
18
19
20

Service Overhaul - Dismantling

6.4.4 Vapour Control Mechanism- Cam, Needle, and Needle Housing

10. Remove the stop plate circlip (1) and discard.

    Remove the stop plate (2) and spring (3).

    Loosen the grub screws (4) securing the cam locking shaft (5).

    Remove the cam locking shaft, thrust bearings (6), cam (7), and spacer (8).

11. Remove the closing mechanism shaft (9).

12. Remove the cut off mechanism screws and washers (10)

    Remove the bal seal retaining washer (11) and discard the bal seal (12).

    Remove the spool (13), and discard the O-rings (14).

    BE CAREFUL NOT TO DAMAGE THE REAR SEALING FACE (ARROWED) OF THE SPOOL.

13. Putting a hand over the cut-off area, invert the unit to allow the seal assembly (15), and spring (16) to fall into the hand.

    Clean the shaft (9), its guide in the spool assembly, and the PTFE face of the seal, with suitable solvent.

    DO NOT USE ABRASIVE CLEANER OR SCRATCH THE SEAL FACE IN ANY WAY

14. Remove the two screws securing the back plug (17), remove the plug and discard the O ring (18).

    Remove the spring (19), push out the needle (20) and cam follower (21) assembly.

    BE CAREFUL NOT TO DAMAGE THE NEEDLE CONTROL SURFACE (ARROWED)

    Remove the cam follower circlip (22) and discard.

    Discard the needle bal seal (23).

15. Remove the two screws (24), discard the washers (25), and loosen the grub screws (26) securing the needle housing (27).

    Using service tool, Part No. 408883 (needle housing removal/setting), unscrew the needle housing, then push it out of the valve block.

    BE CAREFUL NOT TO DAMAGE THE REAR FACE OF THE HOUSING (ARROWED)

    Discard the two O rings (28).

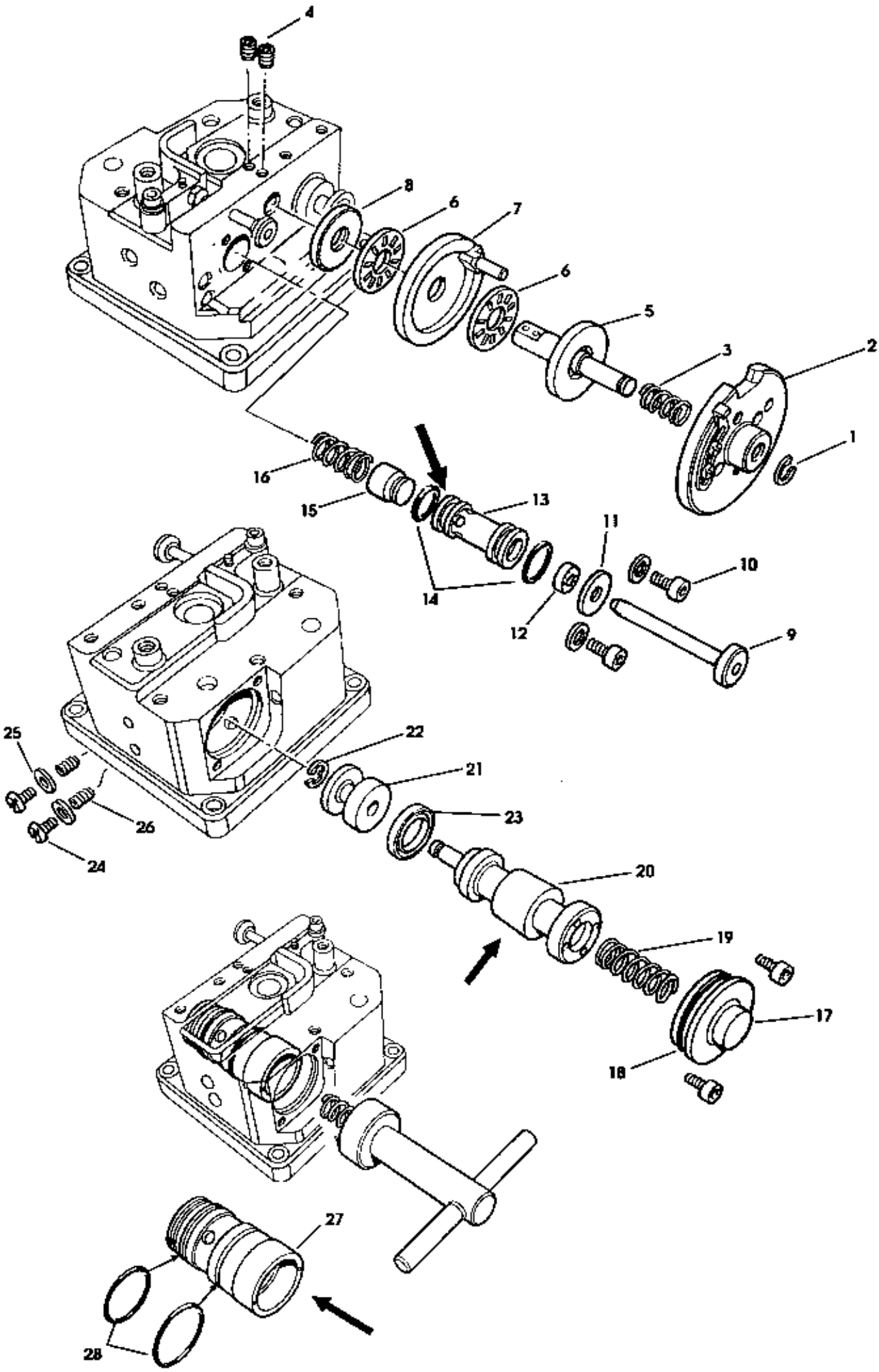
4
8
6
7
6
5
3
2
1
16
15
13
11
10
14
12
9
25
22
21
26
23
24
20
19
17
18
27
28

SERVICE PROCEDURES

Service Overhaul – Dismantling

6.4.5 Filler Block, Coil, Vapour Chamber

16. Remove the filler label (1).

    MAKE A NOTE OF THE AGENT TYPE SHOWN ON THE LABEL BEFORE DISCARDING.

    Remove the two filler block securing screws and detach the block (2) from the vapour chamber (3).

    Discard the five O rings (4) that seal the vapour chamber to the filler block.

17. Slide off the vapour chamber cover (5).

18. Detach the coiled tubing (6) from the coil connectors (7) and discard the tubing and securing clips (8).

    Carefully remove the two coil connectors – DO NOT DISTORT.

    Remove and discard the O rings (9).

19. Remove the vapour chamber to valve block connector (10), remove and discard the O rings.

20. Remove the four screws securing the base (11) to the vapour chamber.

NOTE

For servicing information on the Abbott Quik Fil filler block, refer to the Appendix at the back of this service manual.

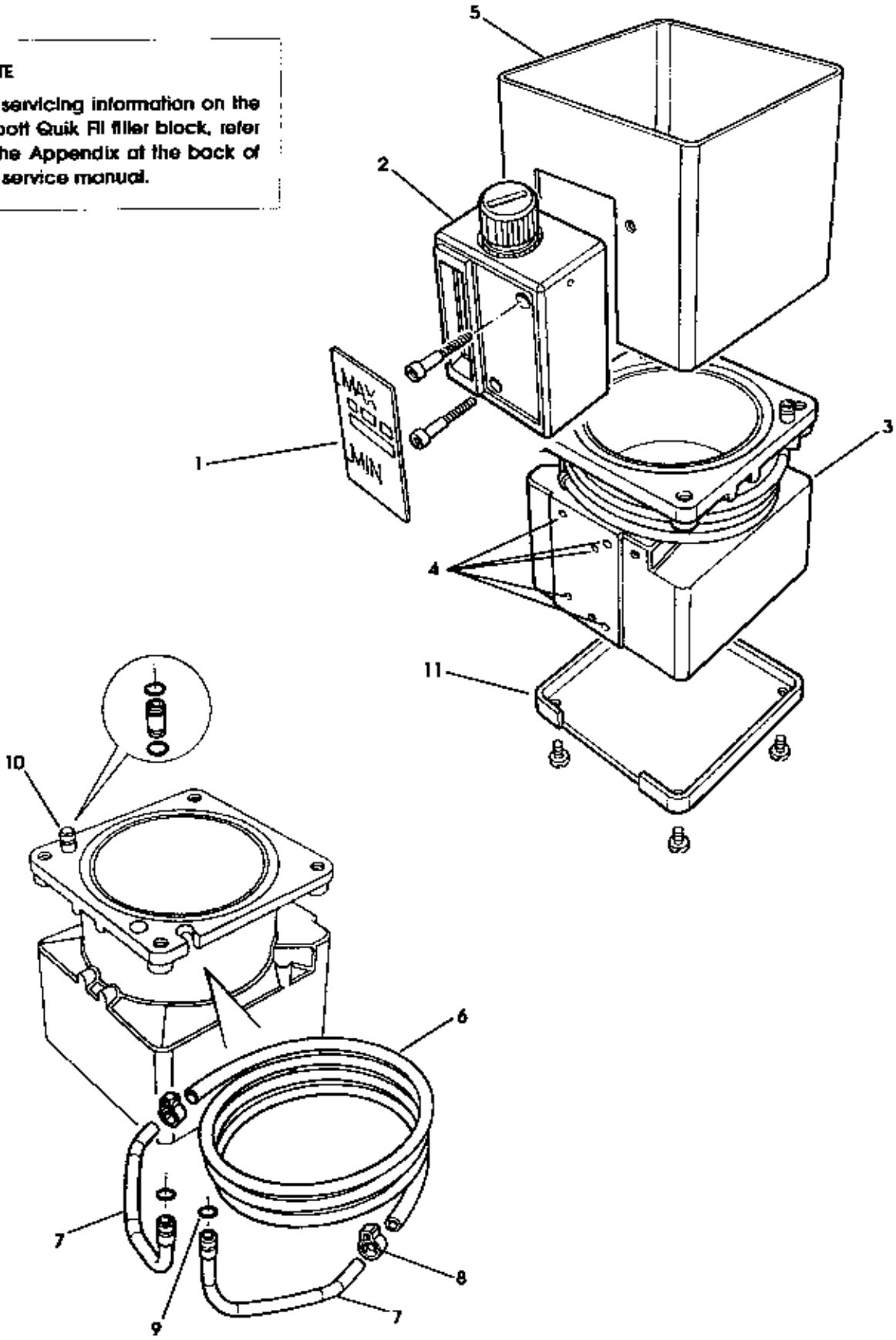

APPENDIX

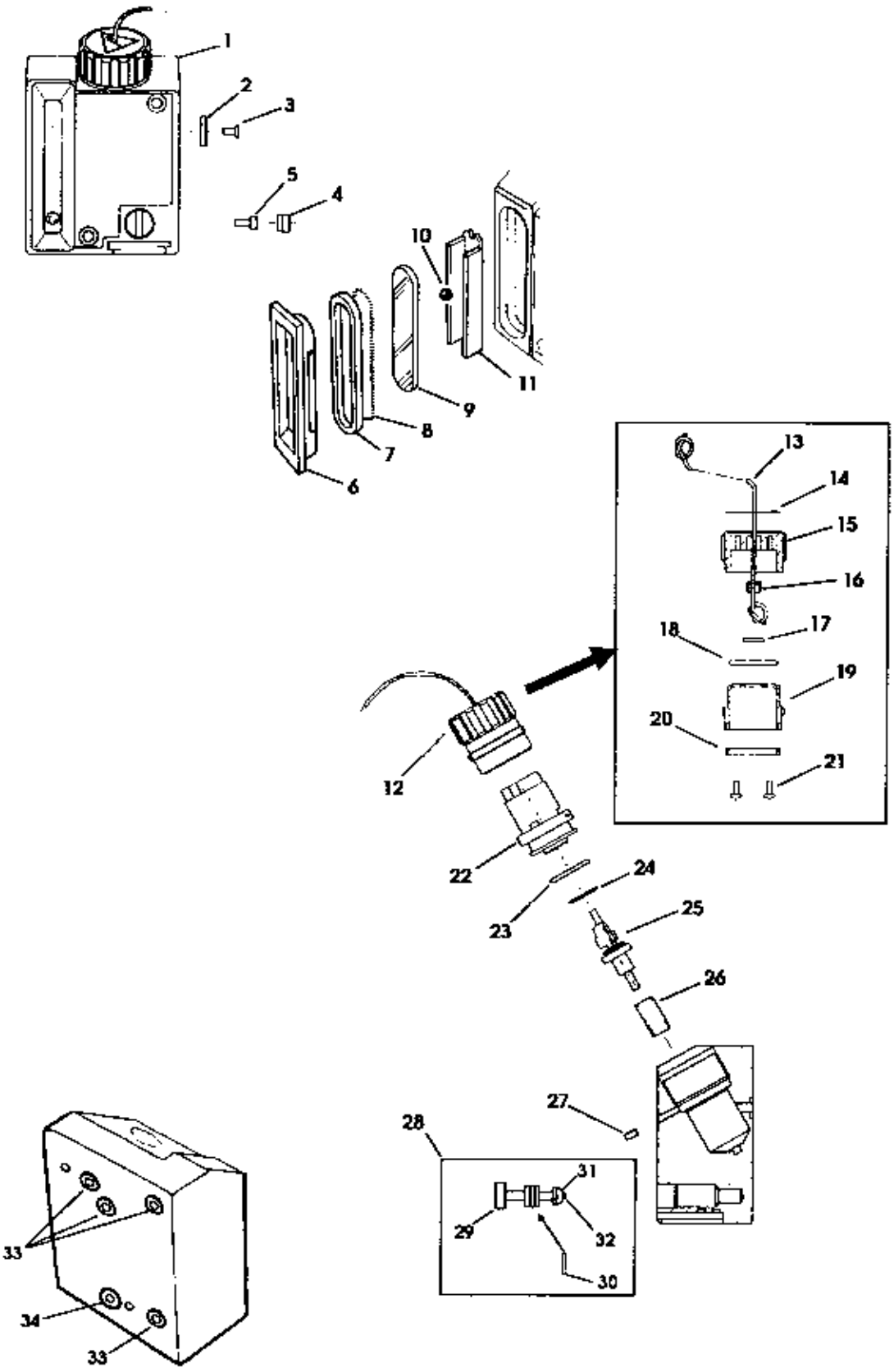
1
2
3
5
4
10
11
9
8
7
6
13
14
15
16
17
18
19
20
21
12
22
24
23
25
26
27
28
31
29
32
30
33
34
33

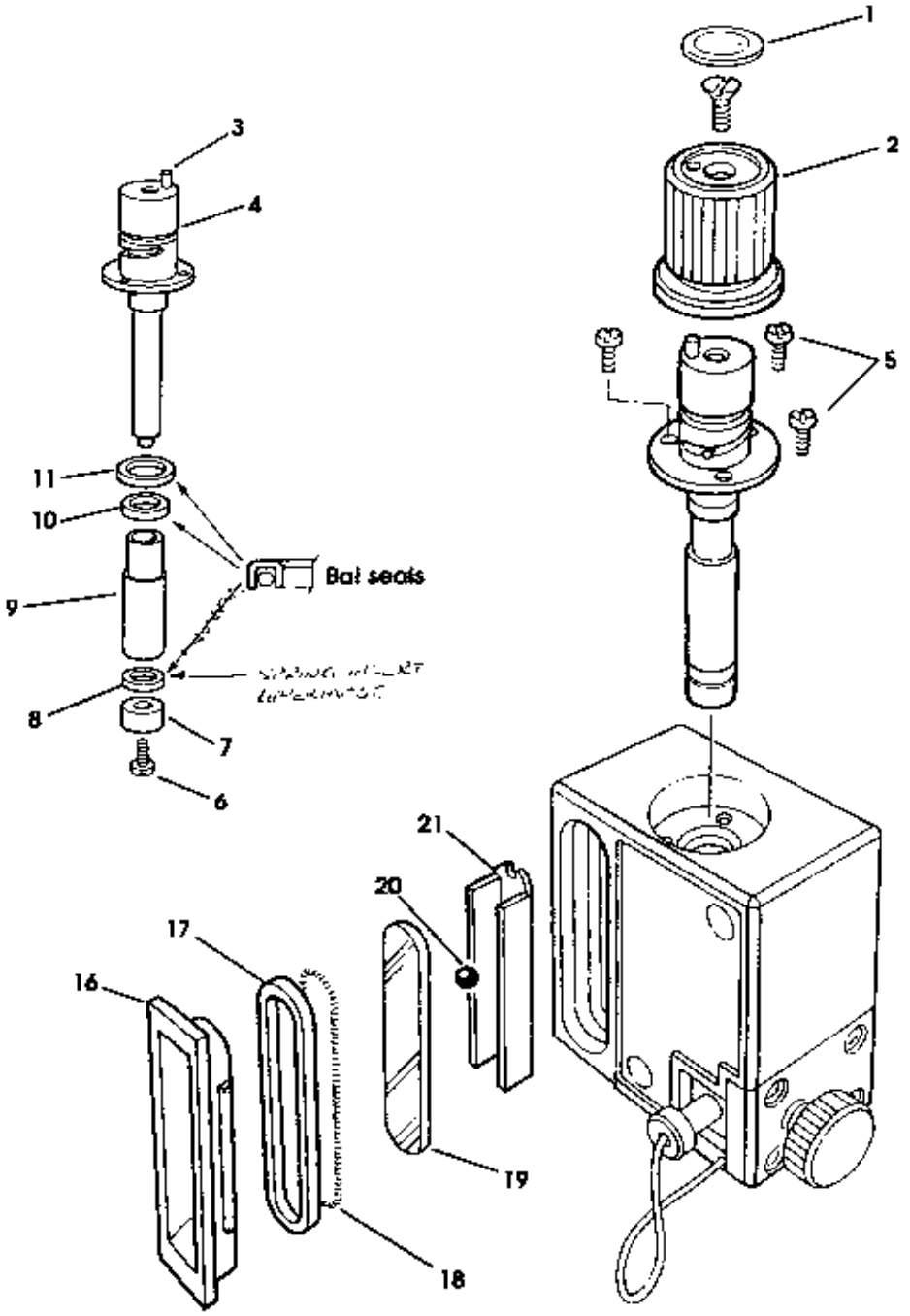

Service Kit Parts

Ref.	Part No.
7	408296
8/10	042812
11	042811
14	408294
15	011135
16	408246
17	408248
18	031704
20	408255
21	408250
-	020404 (circlip for 13)

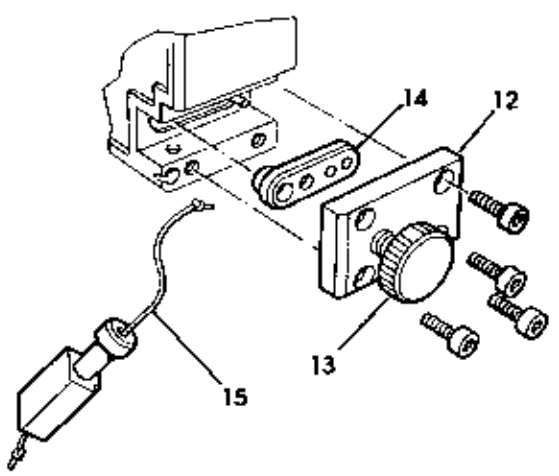

SERVICE PROCEDURES

Service Overhaul

6.4.7 Screw Cap Filler Block

Dismantling

1. Remove the filler knob assembly (1).

2. Unscrew the shaft assembly (2) and remove the seal (3) and rivet (4) and discard.

3. Unscrew the shaft housing (5).

   Remove the O ring (6) and discard.

4. Prise the bezel (7) from the filler block, and discard.

5. Carefully remove the seal (8), spring (9), and glass (10).

   Discard the seal and spring.

6. Remove and discard the ball (11) and backing (12).

Inspection and Reassembly

1. Clean all parts thoroughly with a suitable solvent. (Ensure local Health and Safety procedures are followed).

   Inspect all parts for signs of wear, and replace as required. Refer to spare parts list for information.

2. Put the new O ring (6) into the shaft housing (5) and screw the housing into the filler block. Use service tool, Part No. 408880 (filler shaft housing tool).

   Note, torque value is 5.7 Nm.

3. Secure seal (3) to shaft-end using rivet (4). Gently tap the rivet in, taking care not to damage the seal with the hammer. Alternatively, press the rivet in with a vice.

   Screw the shaft/seal assembly into the filler block.

4. Screw on the filler knob.

5. Fit the new sight glass backing (12) and ball (11).

   Fit the spring (9) into the sight glass seal (8) then carefully place the glass (10) into the seal.

   Fit the seal/sight glass assembly into filler block using service tool, Part No. 408874 (sight glass seal compression tool).

   TO ENSURE CORRECT FITMENT, ALWAYS USE THE SERVICE TOOL FOR THIS OPERATION.

   A damaged seal may deteriorate rapidly during vaporizer use.

6. Fit the bezel (7).

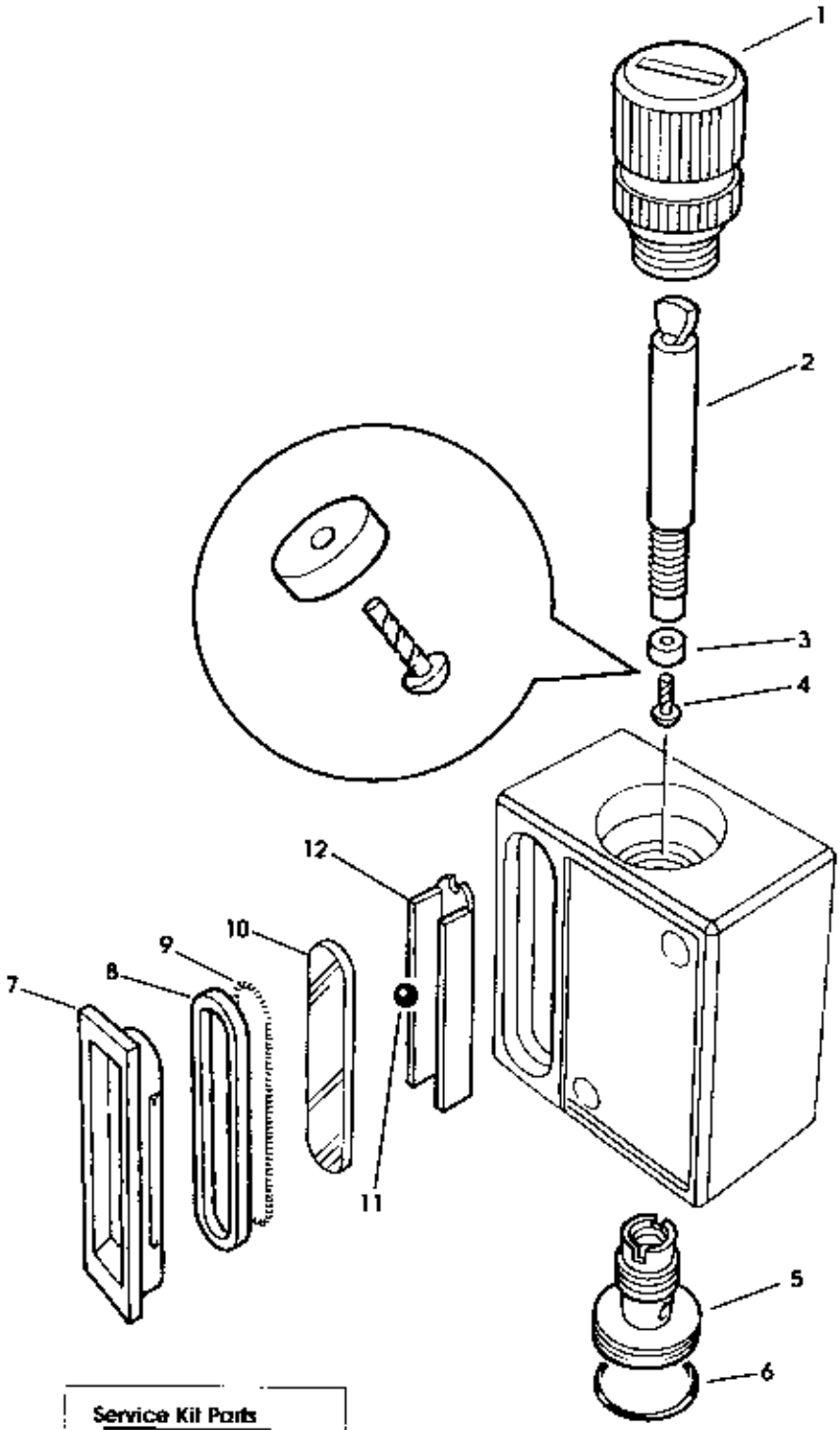

Service Kit Parts

Ref.	Part No
3	408239
4	020214
6	041218
7	408246
8	408248
9	031704
11	408255
12	408250

SERVICE PROCEDURES

Service Overhaul

6.4.8 Vaporizer Connector Blocks

6.4.8.1 Cagemount

1. Check the tapers (1) for damage, i.e. dents or peeling chrome.
   Replace if damaged
2. Ensure ports are clean and grease free
3. Tighten studs (2) to 4 Nm and ensure nuts move freely. Replace studs and nuts if tight.

6.4.8.2 Back Entry

1. Remove the four screws from the backplate (1). Replace if damaged.
2. Remove/discard the two O rings (2).
3. Check the backplate seal face for damage, i.e. dents or peeling chrome.
4. Renew O rings, refit the backplate to the block. Tighten screws to 4 Nm.

6.4.8.3 Back Entry Interlock (additional operations)

5. Remove the locking pin (3), spring (4), and washer (5).
   Use service tool. Part No. 408889 (interlock bush tool) to unscrew the two support bushes (6).
   Remove the interlock push rods (7), springs (8), and washers (9), leave the circlip (10) on each shaft.

NOTE The longer push rod is fitted to the right hand side of the block (vaporizer viewed from front).

6. Clean all components.
   Check for wear and damage (check the rods are not bent).
   Check the circlip (10), on the locking pin (3) and each push rod (7). Renew if distorted.
7. Reassemble the interlock push rods (7) – place the washer (9) over the non-chamfered end of the rod (arrowed 'A'), followed by the spring (8) and support bush (6).
   Fit the components back into the block (longer push rod to right hand side – vaporizer viewed from front).
8. After assembly ensure both interlock push rods move freely.
9. Place the washer (5) onto the locking pin (3) followed by the spring (4).
   Lightly lubricate the pin with petroleum jelly and fit to the block.
   Clean the tip – 'B' – and lubricate with Rocol Kilopoise to provide damping.
10. Remove the interlock lever (11) from the valve block as follows:
    Remove the screw (12) securing the lever to the valve block.
    Clean the lever, bush, screw, and washer.
11. Remove the interlock shaft (13), clean, and check for wear. (This assumes the dial stop plate, shown assembled in the illustration, has been removed as part of the vaporizer service)
12. Reassemble all components, and tighten screw (12) to 2.3 Nm.
    Ensure free movement of the lever.
    Use service tool, Part No. 408889, to tighten the bushes (6).
13. Prior to replacing the vaporizer top cover (see 6.4.9.5), attach the connector block to the vaporizer with the three screws.
    Turn the vaporizer on to activate the interlock system and use service tool Part No. 408894 to check dimension X (see inset illustration).
14. If necessary, adjust the lever (11) as follows:
    Loosen the grub screw (14) which locks the hexagon adjuster screw (15), then turn the adjuster to increase or decrease interlock pushrod travel.
    Clamp the adjuster screw with the grub screw, and recheck dimension X.

Service Kit Parts	
Ref.	Part No.
2	041220

Cagemount

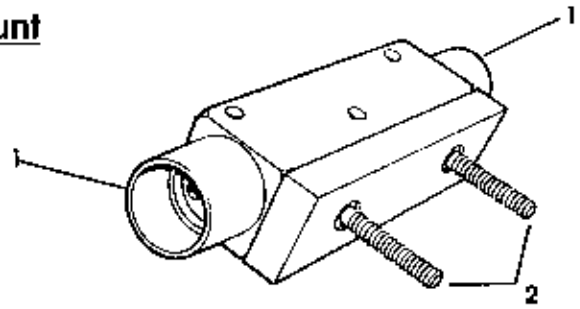

Back Entry

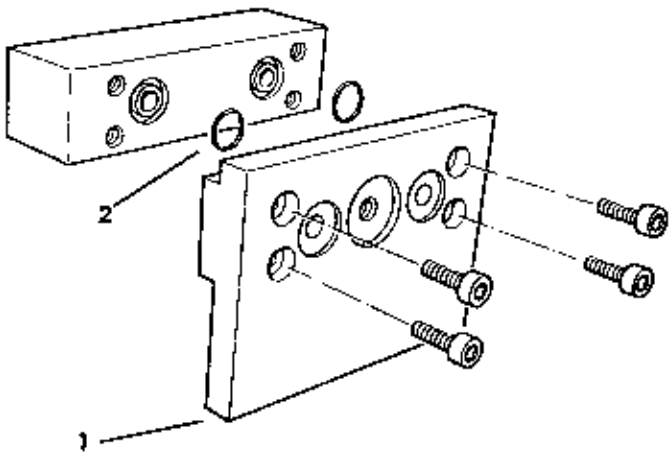

Back Entry with Interlock

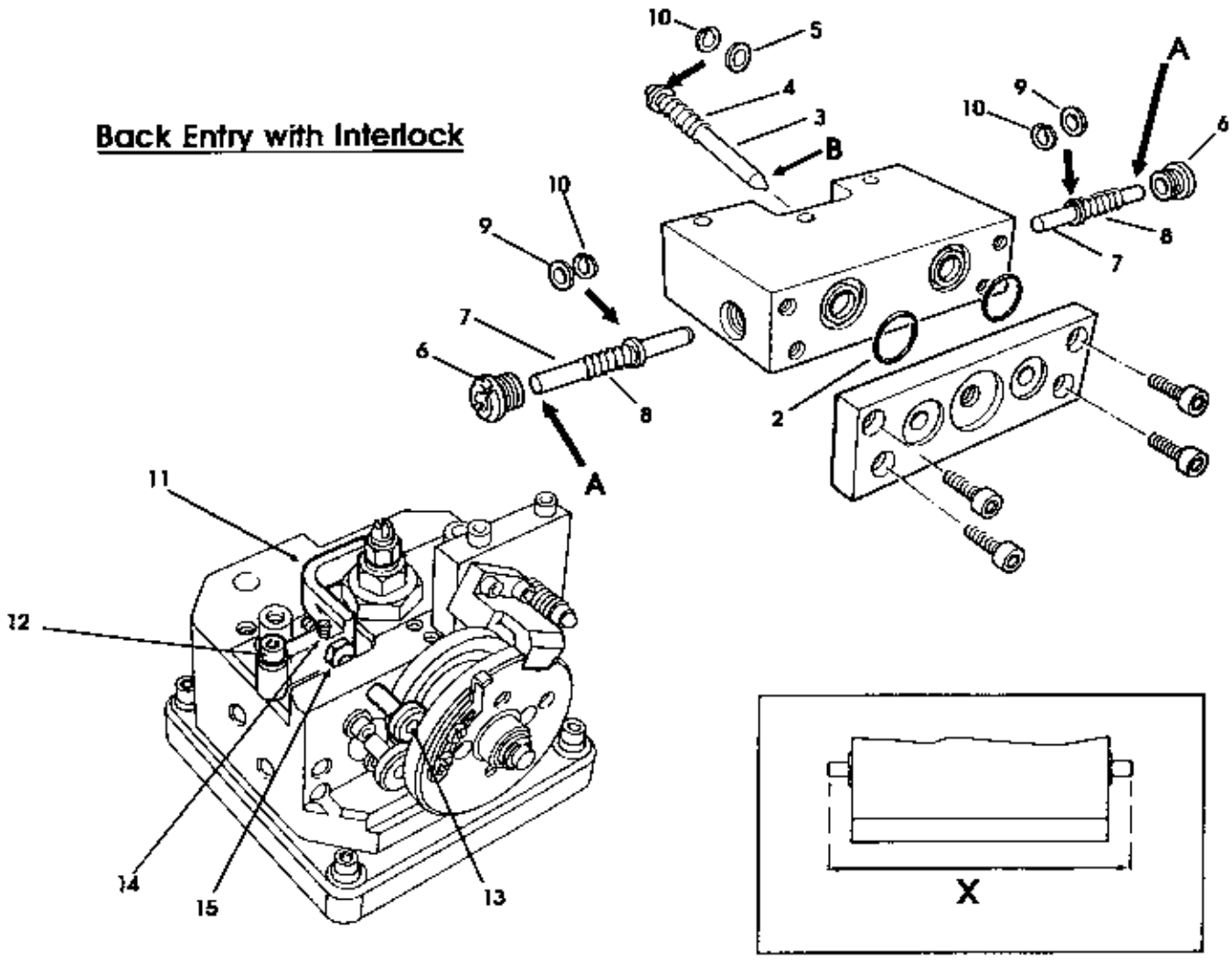

Service Overhaul

6.4.8.4 Vaporizer Connector Blocks Selectatec (Non Interlock)

1. Check counterbore faces (1) for damage, replace block if necessary.

2. Ensure valve actuating pins (2) are secure, replace the block if the pins are loose or missing.

3. Unscrew locking shaft securing screw (3) and remove shaft and knob assembly (4) and spring (5).

   Check that the correct type locking shaft and spring are fitted - vaporizers built from late 1995 have a shaft with a reduced diameter above the claw end (see Note 'A' on illustration) and a spring with a larger coil diameter at one end (see Note 'B' on illustration).

   Early type shaft and spring must be replaced with new components.

4. Clean and inspect shaft claws (6) and slot for wear and damage.

   Replace the shaft if worn or damaged, or if an early type shaft and spring are fitted:

   (a) Remove knob label (7) and screw (8) to separate knob (9) and locking shaft assembly (10).

   (b) Push out the retaining pin (11) from the assembly to allow removal of the locking shaft.

   (c) Use a new retaining pin to secure the replacement shaft.

5. Ensure the large blanking screws (12) are securely fastened on each side of the block.

6. Ensure support plate (13) is straight and undamaged, replace if necessary.

   (a) Remove the two securing screws and detach the plate from the connector block.

   (b) Note that on reassembly the mating surfaces (A) of the plate and connector block must be carefully treated with a small amount of Loctite 7649 activator, then Loctite 601.

   (c) Use Loctite 222 on the two securing screws and tighten to 2.3 Nm.

7. Prior to refitting the locking shaft and other components to the connector block, ensure all parts are clean

8. To refit the locking shaft assembly and spring in the block, proceed as follows:

   Lubricate the area adjacent to the shaft slot (14), and the slot with petroleum jelly.

   Note the configuration of the spring (5) – it has a larger coil diameter at one end.

   Place the spring end (smaller diameter coil) in the location hole (15) in the shaft assembly, then locate the shaft in the block.

   Ensure the other end of the spring (larger diameter coil) locates in the hole (16) in the block.

   Push the shaft down and twist clockwise until the slot lines up with the securing screw hole, and insert the screw (3) and tighten.

   Ensure the shaft moves freely after clamping

9. Check that the end of the spring is flush with the connector block at hole (17), cut the end flush if necessary.

10. Ensure blanking screw (18) is securely fastened (positioned flush, or 0.5 mm under the surface).

    Use Loctite 222 or equivalent if refitting to the block.

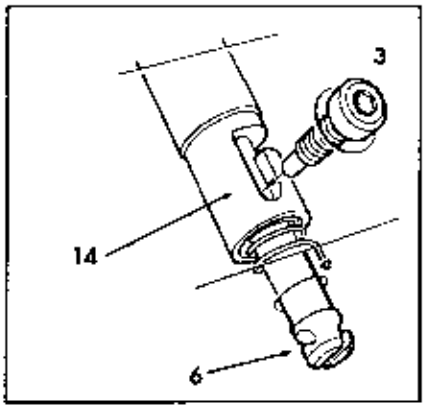

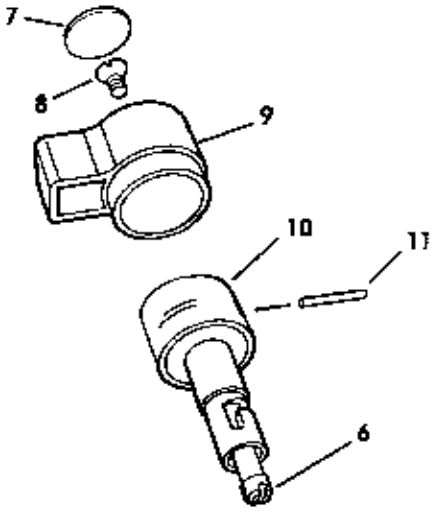

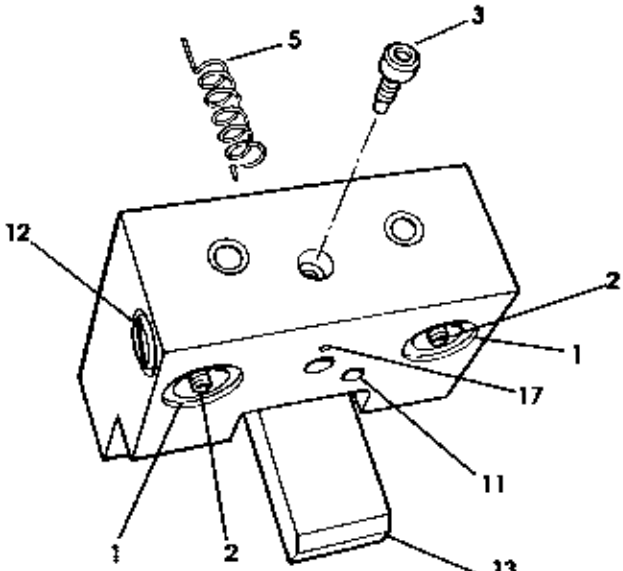

NOTE

(A) On vaporizers built from late 1995, shaft has reduced diameter.

(B) Orientation of spring – the end with the larger coil diameter locates in connector block.

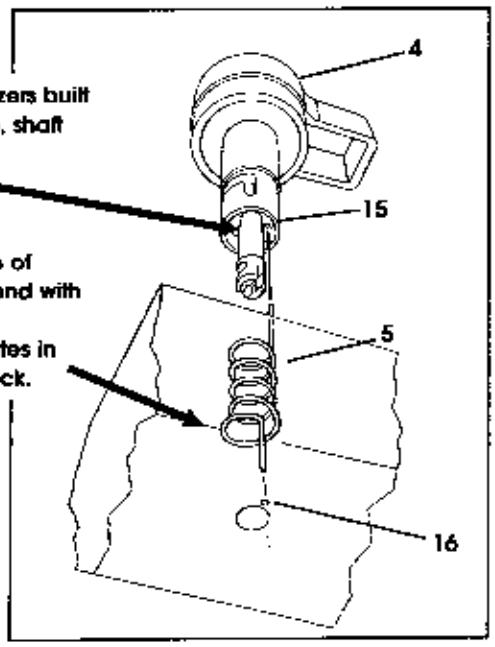

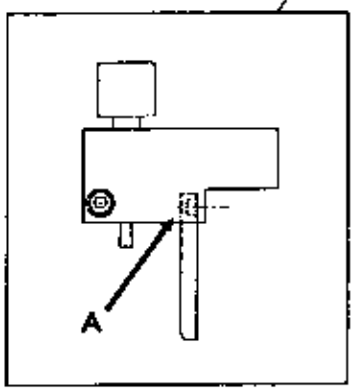

6.4.8.5 Selectatec Interlock (Additional operations)

8. Remove the locking pin (1), spring (2), and washer (3).
   Use service tool, Part No. 408889 (interlock bush tool) to unscrew the two support bushes (4).
   Remove the interlock push rods (5), springs (6), and washers (7), leave the circlip (8) on each shaft.
   Note the longer push rod is fitted to the right hand side of the block (vaporizer viewed from front).

9. Clean all components.
   Check for wear and damage (check the rods are not bent).
   Check the circlip (8), on the locking pin (1) and each push rod (5) renew if distorted.

10. Reassemble each interlock push rod (5) – place the washer (3) over the non-chamfered end of the rod (arrowed (A) on illustration), followed by the spring (6) and the rod support bush (4).
    Fit the components back into the block (longer push rod to right hand side – vaporizer viewed from front).
    Use service tool, Part No. 408889, to tighten bush (4).

11. After assembly ensure both interlock push rods move freely.

12. Place the washer (3) onto the locking pin (1) followed by the spring (2).
    Lightly lubricate the pin with petroleum jelly and fit to the block.
    Clean the tip (B) and lubricate with Rocol Kilopoise to provide damping.

13. Remove the interlock lever (9) from the valve block as follows:
    Remove the screw (10) securing the lever to the valve block.
    Clean the lever, bush, screw, and washer.

14. Remove the interlock shaft (11), clean, and check for wear. (This assumes the dial stop plate, shown assembled in the illustration, has been removed as part of the vaporizer service).

15. Reassemble all components, and tighten screw (10) to 2.3 Nm. Ensure free movement of the lever.

16. Prior to replacing the vaporizer top cover (see 6.5.9.5), attach the connector block to the vaporizer with the three screws.
    Turn the vaporizer on to activate the interlock system and use service tool, Part No. 408894 to check dimension X (see inset illustration).

17. If necessary, adjust the lever as follows:
    Loosen the grub screw (12) which locks the hexagon adjuster screw (13), then turn the adjuster to increase or decrease interlock pushrod travel.
    Clamp the adjuster screw with the grub screw, and recheck dimension X.

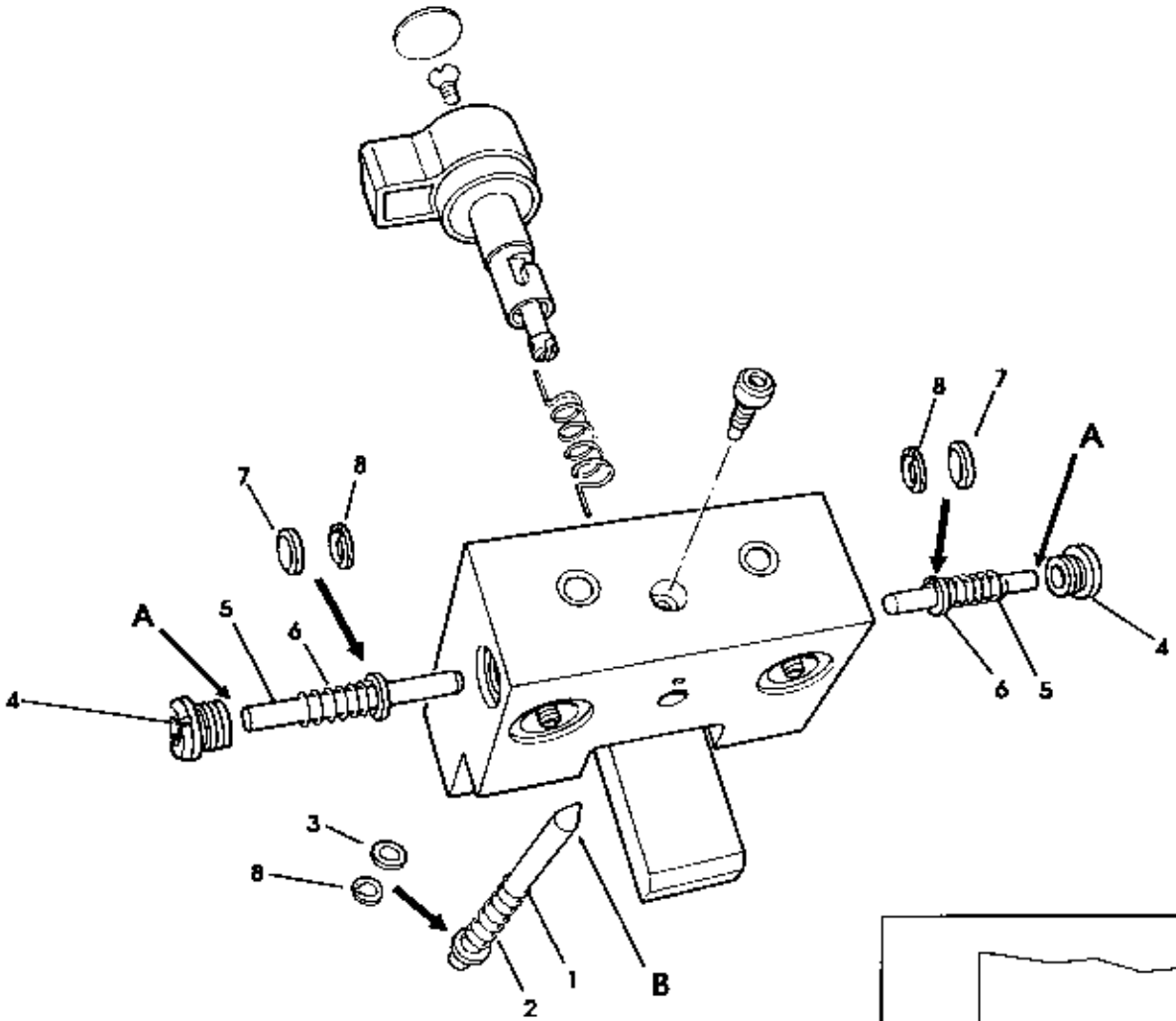
A
A
B
1
2
3
4
4
5
5
6
6
7
7
8
8
8

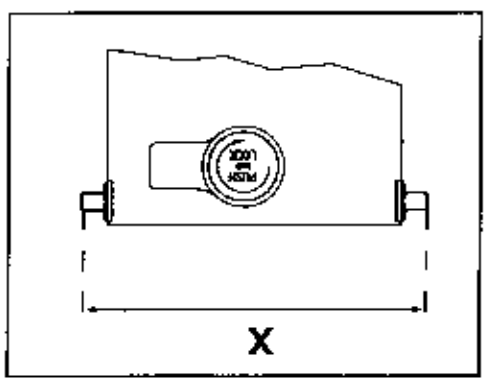
X

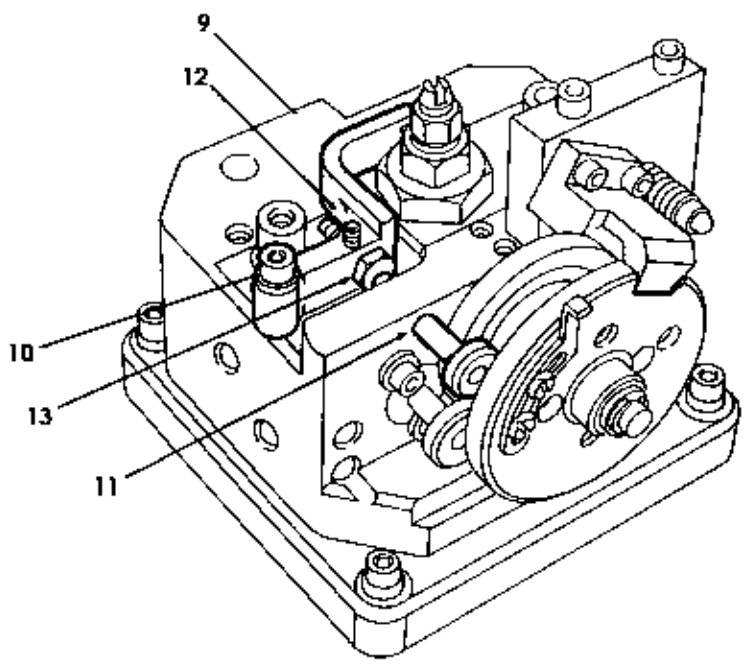
9
10
11
12
13

Service Overhaul

6.4.8.6 Vaporizer Connector Blocks 'Plug-in' (Dräger Compatible)

1. Check counterbore faces (1) for damage, replace block if necessary.

2. Ensure valve actuating pins (2) are secure, replace the block if the pins are loose or missing.

3. Ensure support plate (3) is straight and undamaged, replace if necessary.

4. Remove the label from the knob moulding (4), remove the screw, and remove the knob.

5. Slacken the grub screw (5), and remove the knob assembly (6), washer (7), and shaft (8)
   Note the spring (9) in the knob assembly, and the position of the locating pins (10).

6. Prior to reassembly:
   a) ensure all parts are clean, including the area under the washer.
   b) check the shaft pin (11) for damage
   c) lubricate the spring (9) with petroleum jelly.
   To reassemble, reverse the procedure given in operations 4 and 5.

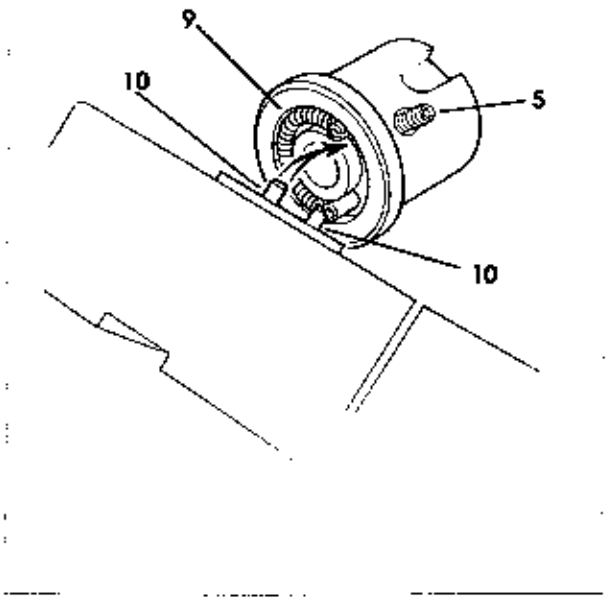
9
10
5
10

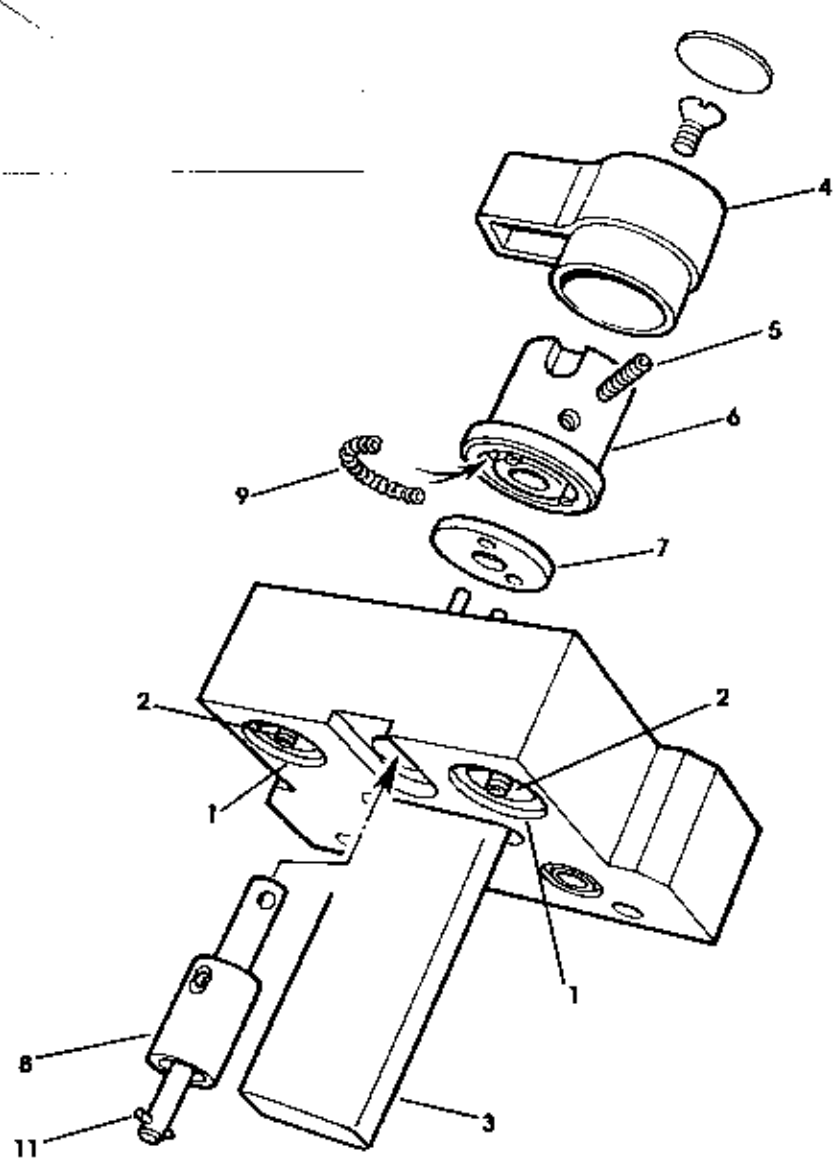
4
5
6
9
7
2
2
1
1
8
11
3

Service Overhaul

6.4.9 Vaporizer Reassembly

NOTE *Prior to reassembly, all components must be cleaned with a suitable solvent ensure local Health and Safety standards are followed.*
Inspect all parts for damage and signs of wear and replace as required. Refer to spare parts list.

6.4.9.1 Vapour Control Mechanism Bypass mechanism

1. Drop the spring (1) and seal assembly (2) into the cut off mechanism bore.
   Ensure seal face is clean and scratch free.
   Put new O rings (3) and (4) on the cut-off mechanism spool (5). Note that (4) is the larger O ring.
   Fit a new ball seal (6) into the bore of the spool. Ensure correct orientation - spring side of seal into block.

2. Push the spool assembly into the valve block and hold in position with the washer (7) using the screws (8) and washers.
   Note, torque value is 1.2 Nm.

3. Push the closing mechanism shaft (9) into the spool and check for free movement, during opening by hand, and with spring return.

4. Put the new O ring (10) on the bypass adjuster shaft (11) and screw the shaft into the bypass control plate (12).
   Put the new O ring (13) on the bypass control plate.

5. With the valve block upside down locate the three springs (14) in the counterbores and slide the bypass control plate into the block, locating the hole (15) in the plate with the anti-rotation pin (16) in the block.
   Compress the springs by holding the control plate down and at the same time, screw on the large adjuster nut (17) to retain the assembly.

6. Screw on the large locknut (18) followed by the small locknut (19).

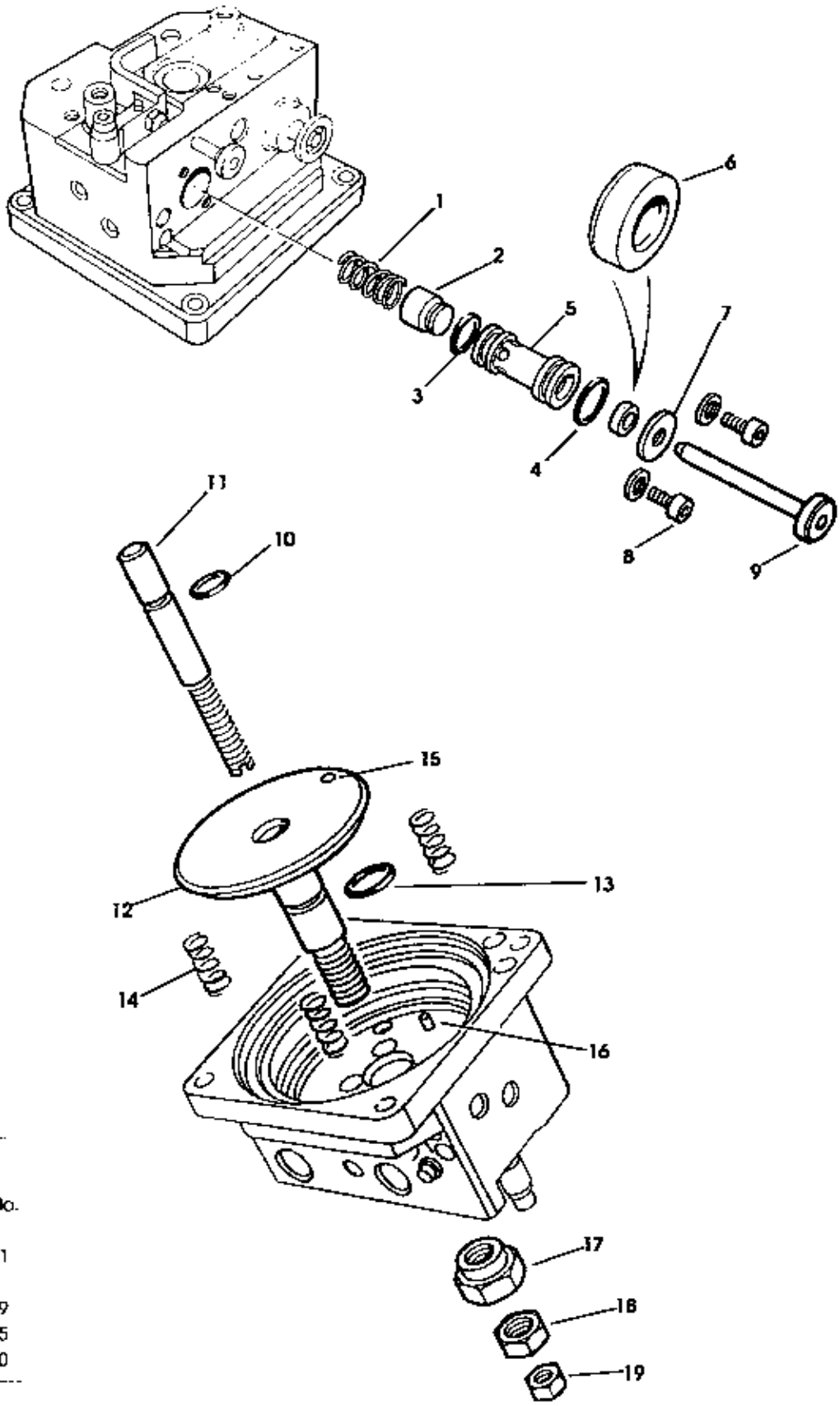

Service Kit Parts

Ref.	Part No.
3	041221
5	0226
6	042809
10	041215
13	041220

Service Overhaul

Reassembly

6.4.9.2 T.C. Assembly, Wick Assembly

7. Reassemble the temperature compensator sleeves (1) into the outer sleeve (2).
Fit the spring (3) over the innermost rod.
Ensure all parts are clean, and contact faces are free from damage.

8. Fit the spacer (4), and a new O ring (5) to the gas flow plate (6).
Screw the T.C. sleeve assembly into the gas flow plate and tighten to 75 Nm using service tool, Part No. 408886 (T.C. outer tube tool).

9. Place the wick seal (7) onto the gas flow plate.
Fit the TC cloth sleeve (8), ensuring that the sewn edge does not obstruct the holes in the gas flow plate (6).
Locate the wick assembly (9) on the gas flow plate and ensure it is central.

10. Clamp in position with clamp plate (10) and secure with three screws (11), torque value - 2.26 Nm.
Fit a new O ring (12) onto the gas flow plate.

11. Fit new O rings (13) and (14) onto the bypass plate (15).
Clean the face of the bypass control plate (already fitted to the block – see previous page), and the face of the bypass plate.
Use service tool, Part No. 408892 (bypass plate location tool) to push the bypass plate into the valve block.

12. Turn the valve block upside down and locate the O ring (16) in the bypass plate.
Fit the T.C. / wick assembly into the valve block - ensure wick end (17) is opposite hole (18).

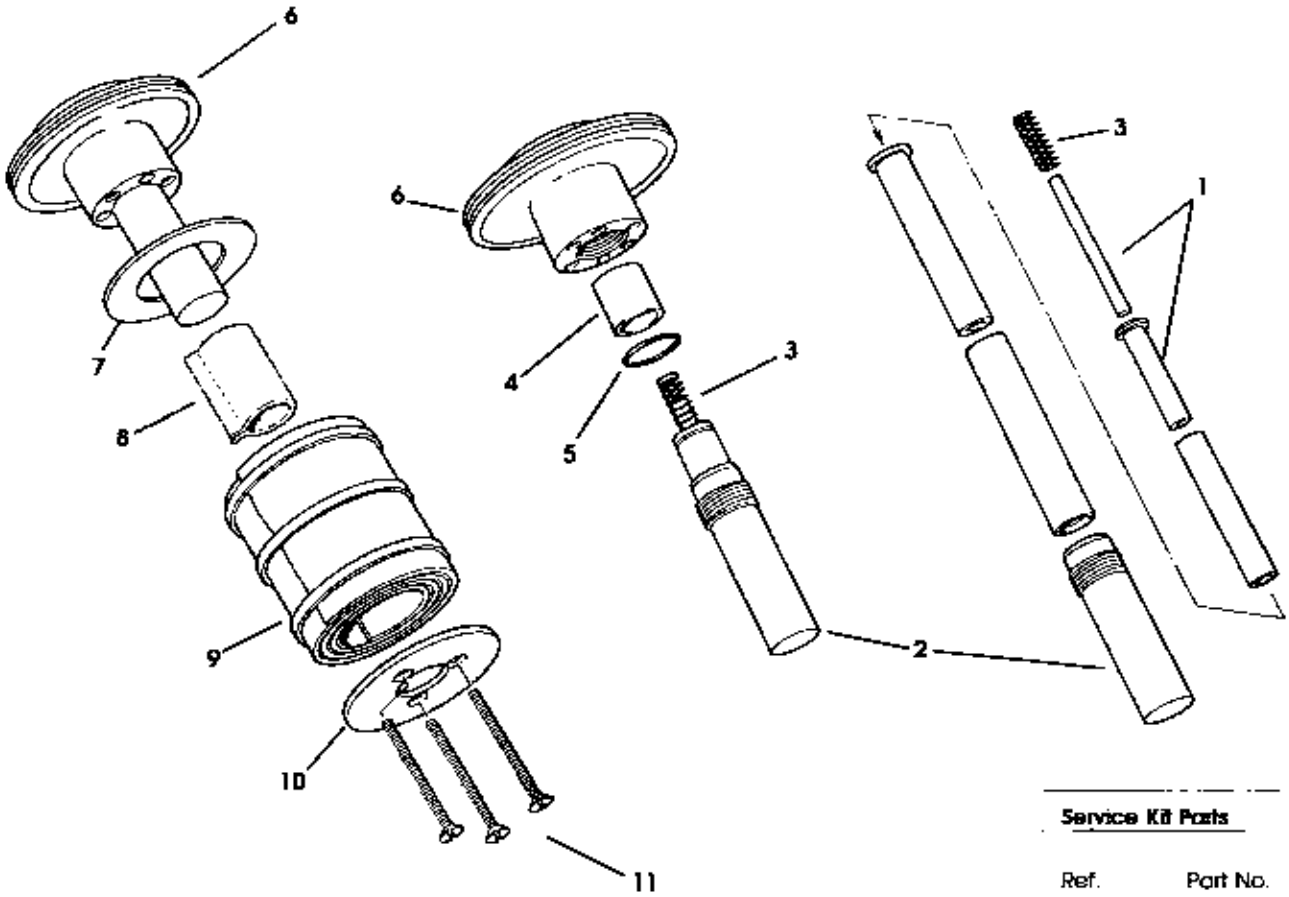

Service Kit Parts

Ref.	Part No.
5	041231
7	408143
8	408156
9	408121
12	041234
13	041233
14	041232
16	041235

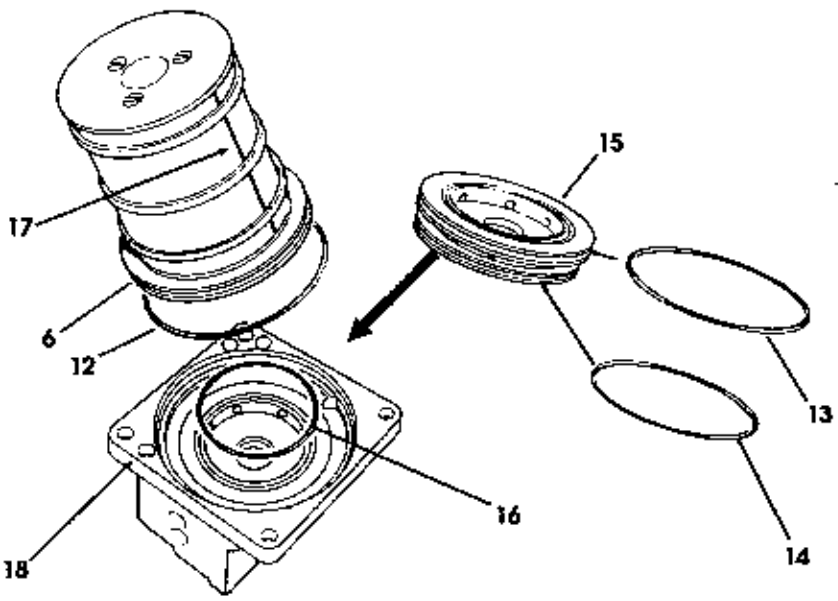

Service Overhaul

Reassembly

6.4.9.3 Coil Assembly, Vapour Chamber

13. Fit the coil connectors (1) to the vapour chamber (2) and fit a new O ring (3) to each connector.
Note, short connector to rear of vapour chamber.

14. Fit new O rings (4), and then fit the connector (5) – vapour chamber to valve block to the vapour chamber.

15. Place a clip (6) on the coil tube (7), slide the tube end onto the shorter connector, and crimp the clip into position

16. Wrap the coil anti-clockwise around the vapour chamber, cut to length if necessary, and place the second clip over the tube end.
Note, the longer connector can be removed from the chamber slot (8) for ease of coil assembly.

17. Fit the tube to the second connector, crimp the clip in position.

18. Fit the base (9) to the vapour chamber with four screws – torque value 0.6 Nm.

19. Carefully fit the vapour chamber cover (10) · do not damage the coil tube (7).

20. Fit a new sealing ring (11) to the gas flow plate.
Fit the valve block and T.C. assembly (12) to the vapour chamber assembly.
Fit the four screws, tighten in sequence:
i) A, B, C, D, initially to 0.3 Nm, then
ii) B, A, D, C, to 8.0 Nm.
CAUTION *The screws must be tightened in the order shown.*

21. Fit new O rings (13 and 14) in the back of filler block (15). Note position of larger O ring (14).
Fit the filler block to the vapour chamber using two screws (16).
Note, torque value 2.3 Nm.

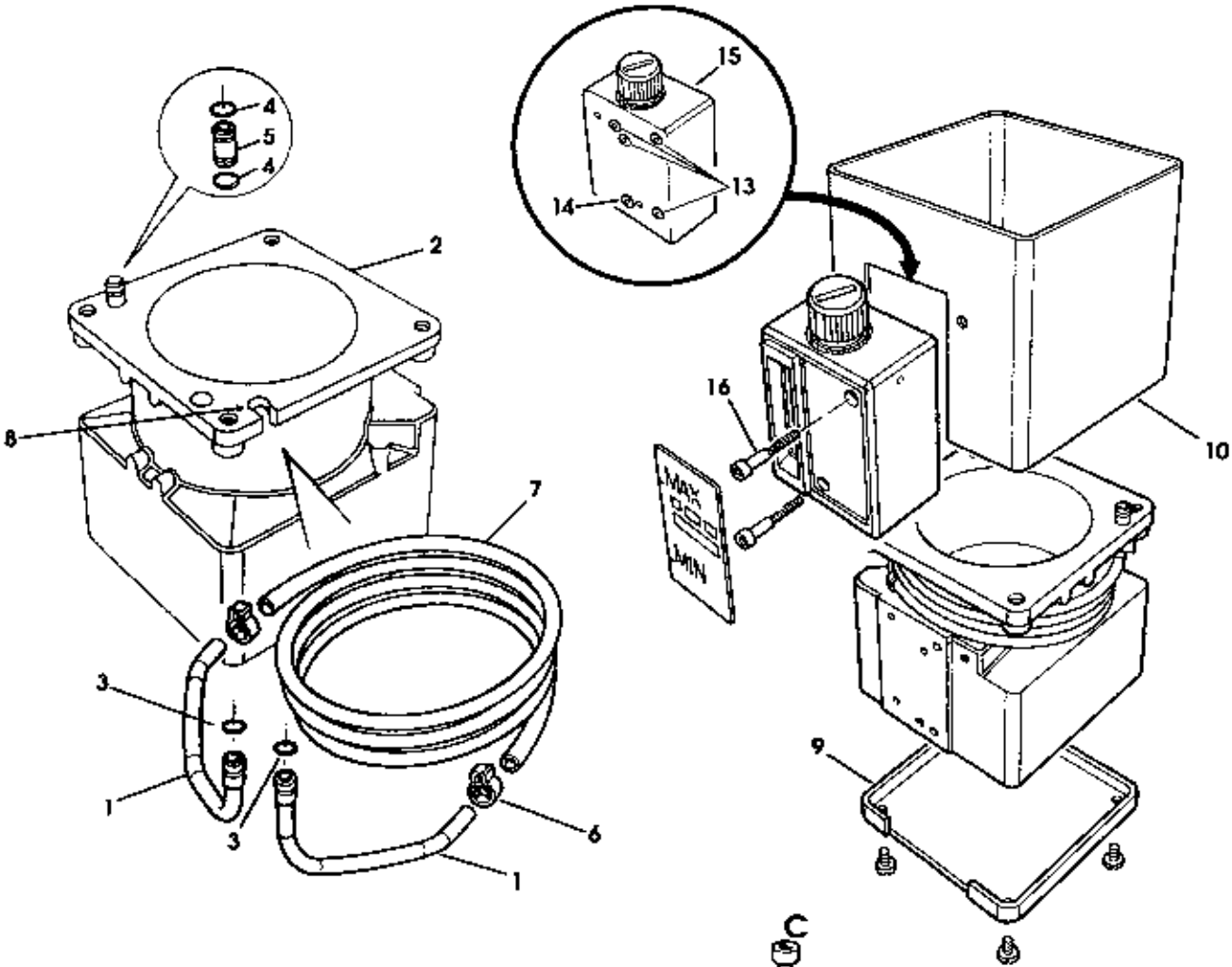

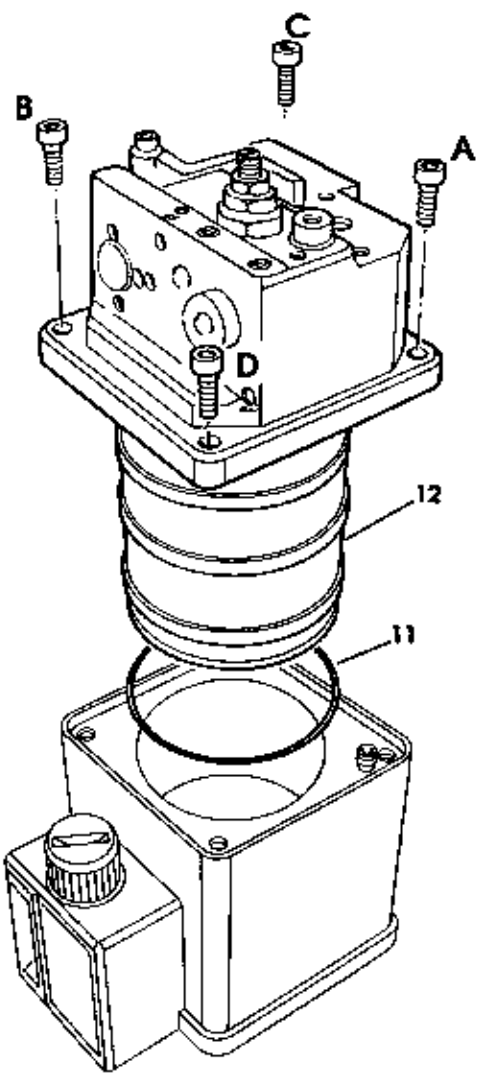

Service Kit Parts

Ref.	Part No.
3/4	041242
6	054931
11	408177
13	041215
14	041204

Tighten in sequence:
A, B, C, D to 0.3 Nm
then,
B, A, D, C to 8 Nm.

Service Overhaul

Reassembly

6.4.9.4 Vapour Control Mechanism (Cam, Needle, and Needle Housing)

NOTE Ensure needle and housing are degreased and thoroughly clean before assembly and check for scratches on the control surfaces.

22. Fit two new O rings (1) and (2) to the needle housing (3), and use service tool, Part No. 408883 (needle/housing tool), to fit the housing into valve block.

23. Fit a new bal seal (4) onto the needle (5) – ensure correct orientation (spring side of bal seal to needle shoulder).
Use service tool, Part No. 408883, to push the needle into the needle housing

24. Fit the cam follower (6) on the needle end, and secure with a new circlip (7).

25. Lightly lubricate the thrust bearings (8) with petroleum jelly
Fit a thrust bearing to the large diameter end of the cam locking shaft (9).
Then fit the cam (10) with the drive pin (11) towards the thrust bearing.
Fit the second thrust bearing, and then the spacer (12).
CAMS ARE AGENT SPECIFIC – CHECK FOR CORRECT PART NO. IF A NEW CAM IS FITTED.

26. Locate the cam in the cam follower and clamp the cam locking shaft into the valve block with the two screws (13). Apply Loctite 242 to the screws and torque to 1.2 Nm.
Ensure that the screws clamp on to the shaft flat.

NOTE If the vaporizer is Back Entry Interlock or Selectatec Interlock, fit the interlock shaft into the valve block before securing the dial stop plate.

27. Fit the return spring (14) and dial stop plate (15) – lubricate with petroleum jelly.
Fit a new stop plate circlip (16).

Service Kit Parts

Ref	Part No.
1	041239
2	041238
4	042813
7	020409
16	020418

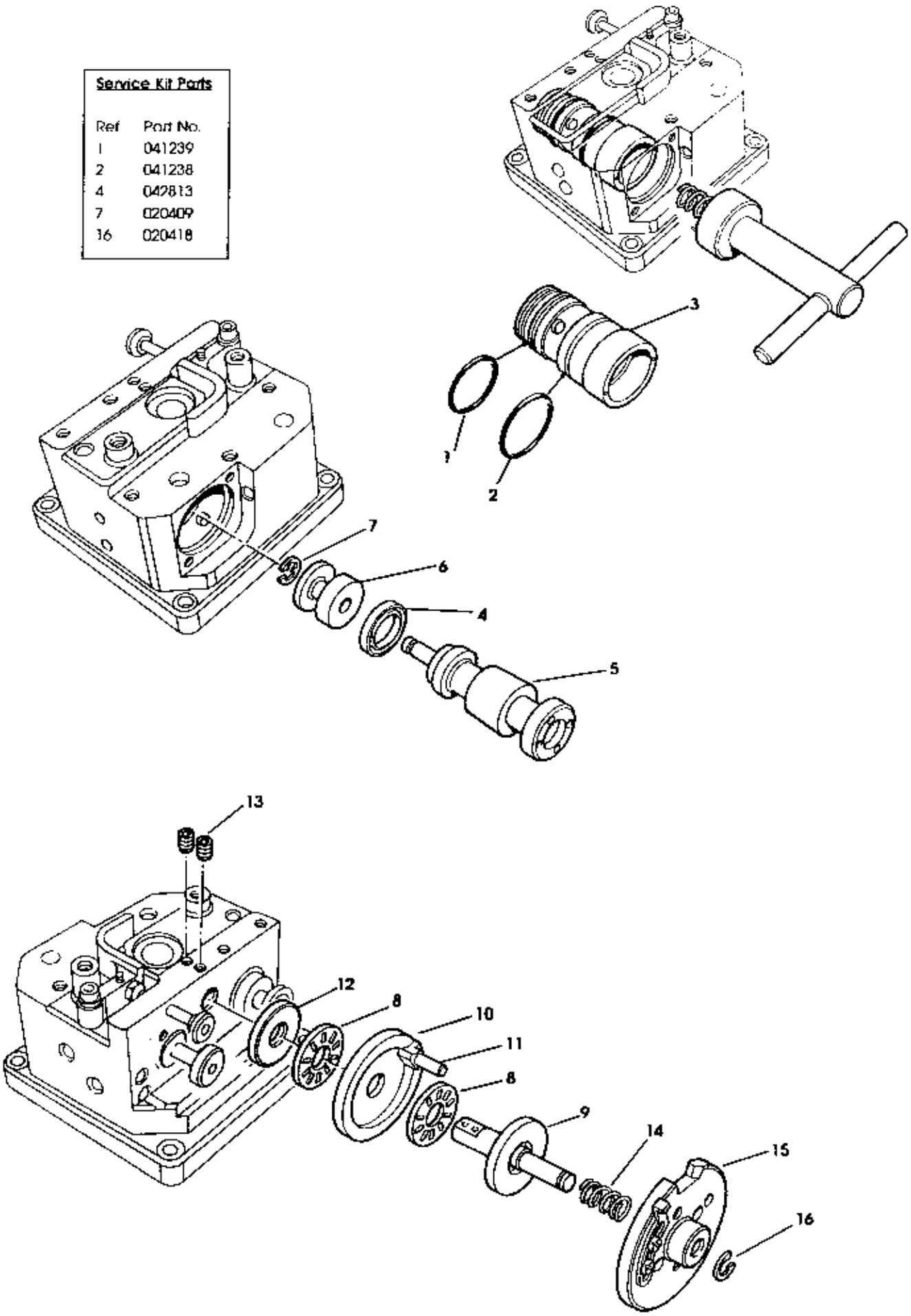

Service Overhaul

Reassembly

6.4.9.5 Dial Stop Plate, Needle Housing Adjustment, Cover and Dial, Connector Block, Lid

28. Fit a new click pin (1) and spring (2) to the dial stop support plate (3).
Lubricate the tip of the click pin with petroleum jelly.
Fit the assembly to the valve block – torque the screws (4) to 2.26 Nm.
NOTE:
A) If the dial stop has not been removed from the support plate the stop plate cut out should locate with the stop with minimum radial movement and still allowing smooth dial movement into the off position.
B) Radial movement is also available to ensure that the clamping screw holes are vertically aligned.

If the dial stop needs adjustment loosen the two screws (5) slightly and move it in to reduce radial movement, or out to give smooth movement.
Relighten the two screws and torque to 1.2 Nm.

29. With the vaporizer in the 'off' position the needle housing must be adjusted to give zero output in the off position.
Use service tool, Part No. 408883 (needle/housing tool) to move the housing out (anti-clockwise) until a gap is just visible between the back face of the cam and the cam follower.
Note that the needle housing tool is spring loaded to bias the needle into the housing and against the cam.
Screw the housing in until the cam follower just clears the back of the cam.

30. Lock the needle housing in position with the two grub screws (6) torque to 0.3 Nm.

NOTE Do not overtighten the screws – this may damage the housing.

Fit the screws (7) and washers – torque the screws to 0.6 Nm.

31. Place the spring (8) in the needle end. put the new O ring (9) on the back plug (10), fit the plug into the valve block and secure with two screws (torque to 1.2 Nm).

32. Fit the moulded cover (11). As the cover is slid on push the dial carrier in, to aid fitment.
Secure with three screws (12) and torque to 2.3 Nm.

33 Fit the dial scale (13) to the dial moulding (14) – if it has been removed.
Fit the assembly to the vaporizer and line the scale zero up with the bezel mark.
Tighten the dial scale screw (15) – torque to 0.6 Nm.
Fit the knob bar (16), torque the screws to 2.3 Nm

34. Refit the connector block (17).
Use new O seals (18) and secure the block with three screws (19), and torque to 2.3 Nm.
Interlock models – check adjustment of lever see 6.4.8.3, or 6.4.8.5.

The vaporizer is now ready for calibration/leak test – see section 6.5.

After Calibration / Leak test:

35. Fit the lid (20), then new labels (21) for the lid, knob, and filler block, checking the labels for correct agent type (see original labels).

36. Attach a 'Warranty Void' label (22) to the back of the vaporizer, across the top moulding and vapour chamber cover.

37. Drain and dry out the vaporizer.

38. Enter details of the service in the Service Record Book.
Attach a 'Service Due' label to the vaporizer.

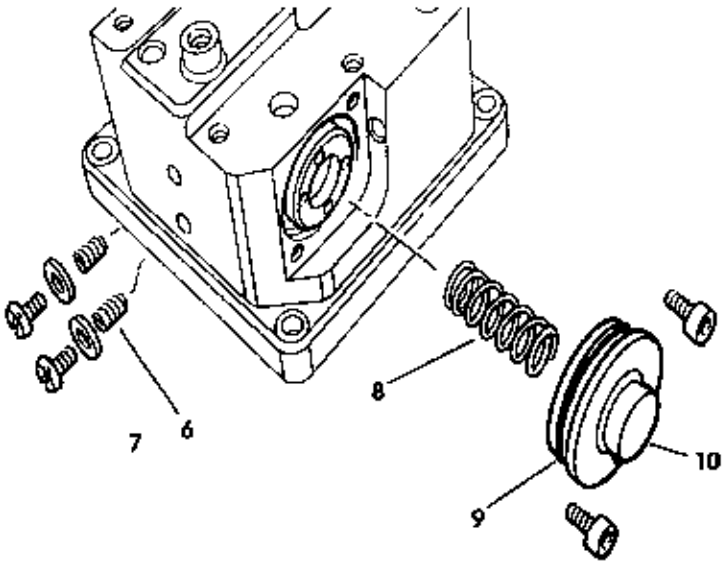

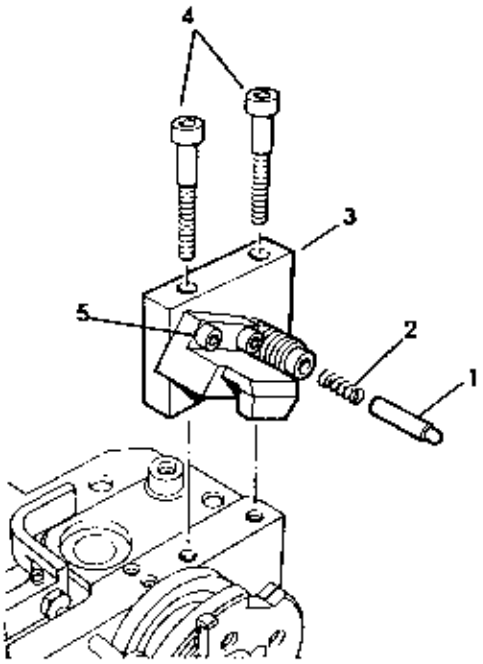

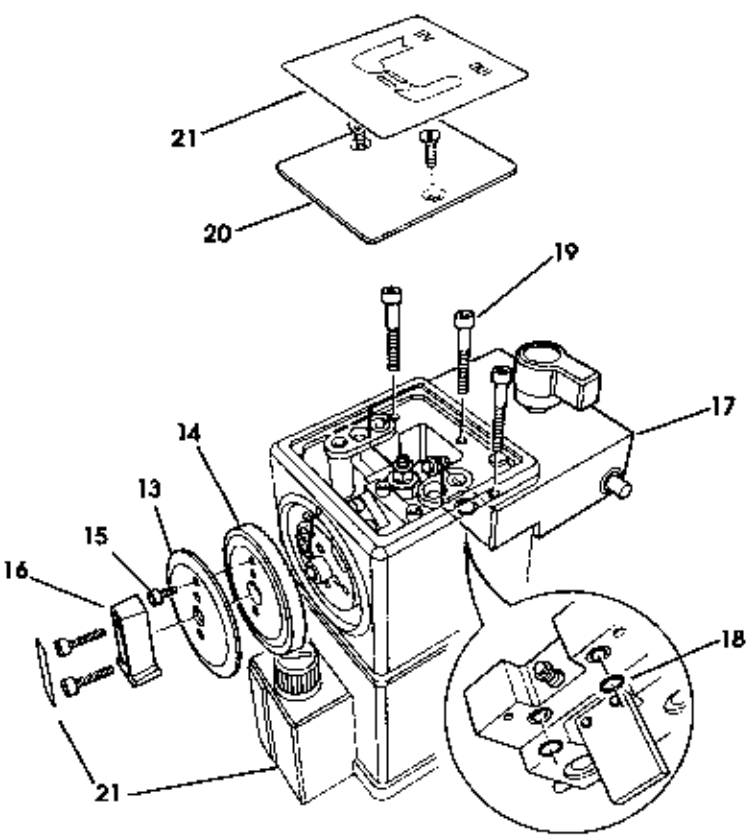

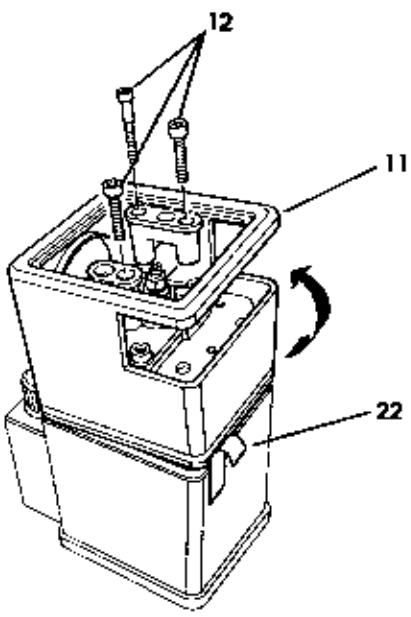

Service Kit Parts

Ref.	Part No.
1	25058
7	041237
15	041220
18	Agent - specific label set
19	15446

6.5 Calibration Check Procedure (After Servicing)

Procedure	Equipment/Test Values
1. Allow 4 hours for the vaporizer to temperature stabilize.	
BYPASS RESISTANCE CHECK 2. Set the maximum bypass resistance to 30 cmH_2O (3 kPa) at 4 L/min air. Undo locknut A. Turn adjuster nut B. Tighten locknut A to 4 Nm.	Use test apparatus A for flow check (see 6.2.4.1). Use service tools 408865/408868/408871 for bypass resistance adjustment.
3. Adjust the bypass resistance to the value obtained prior to dismantling: Undo locknut C. Turn adjuster screw D. Tighten locknut C to 4 Nm.	Acceptance value – 10.4 cmH_2O + 3.4 cmH_2O
VAPORIZER LEAK CHECK **Workshop Test** (preferred method) 4. Use test apparatus B (6.2.4.3) and set a pressure of 250 mmHg.	Acceptance value – pressure drop to 230 mmHg after minimum 60 seconds.
Anaesthetic Machine Test (Use this test only if test apparatus B is not available) 5 Verify the leak tightness of the anaesthetic machine.	See applicable user/service manual for anaesthetic machine
6. Place vaporizer on the anaesthetic machine. The vaporizer must be rigidly supported in its operating position.	
7. Check for leaks from the vaporizer as follows: Attach a pressure gauge to the common gas outlet. Set the vaporizer to half-scale, with the filler shut. Use the low flow flowmeter of the machine to raise the whole fresh gas system to 150 mmHg. Observe the reading on the low flow flowmeter required to maintain the system at 150 mmHg pressure. Confirm the leak is not from the anaesthetic machine by removing the vaporizer and retesting. REJECT ANY VAPORIZER SHOWING EXCESSIVE LEAKS (Refer to section 6.6, Fault Finding.)	Acceptance value – 100 ml/min flow rate or less, to maintain 150 mmHg.

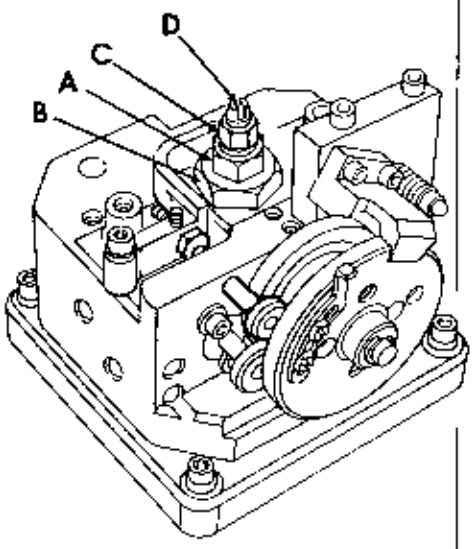

Procedure	Equipment/Test Values
VAPORIZER OUTPUT CHECK	
8. Half fill the vaporizer with the correct anaesthetic agent. Do not refill with the old agent drained prior to disassembly	
9. Allow 4 hours for temperature stabilization.	
Measure the output of the vaporizer with an approved analyser at the flow and outputs shown. Note the room temperature which must be within 20°C ± 1°C.	Test apparatus A with analyser and exhaust system (see 6.2.4.2).
Oxygen should be used as the carrier gas.	
Test with a flow rate of 5 L/min at 0%, 0.4%, 1%, 3%, 5%, 7% and 8% output settings.	Outputs should be within ± 20% of the indicated value for set values at 1% and above, or within ± 25% below 1% set.
NOTE a) Test at 7% and 8% on applicable vaporizers only. b) Test also at 4% on Halothane 4% vaporizers.	Output at zero is to be less than 0.03% v/v.
Record the actual value on the Calibration Record test sheet in the Service Record Book.	
REJECT ANY VAPORIZER SHOWING A VARIANCE OUTSIDE THE TOLERANCE VALUES AND REFER TO FAULT FINDING, SECTION 6.6. IF LOW OR ZERO OUTPUT OBTAINED AT ALL SETTINGS, REFILL/CHECK THE LEVEL INDICATOR. ALLOW TIME FOR THE WICK TO SATURATE.	
Note that in general, adjust the needle setting to achieve zero output at zero setting, and adjust the bypass resistance to achieve correct calibration.	
FOR REPEATED FAILURE OF THE CALIBRATION TEST, PERFORM A SERVICE ON THE VAPORIZER.	

6.6 Fault Finding After Service

Fault	Cause	Treatment
Fails overall leak check	Leak at anaesthetic machine	Check anaesthetic machine
	Filler open	Shut filler
	Loose Cagemount connectors	Tighten
	Damaged tapers	Replace connector block
	Vaporizer loose on Back Entry / Vaplock	Tighten/replace
	Damaged sealing face	Replace connector plate. or see below for Selectatec block
SELECTATEC COMPATIBLE MODELS / DRÄGER PLUG-IN		
	O rings missing from Selectatec back bar on anaesthetic machine.	Fit new O rings
	Vaporizer not clamped to back bar.	Clamp correctly
	Damaged sealing counterbores	Fit new block assembly during service.
	Damaged or bent support plate	Fit new support plate (6.4.8.4)
	Worn or damaged claws on locking shaft	Fit new locking shaft (6.4.8.4)
		NOTE: The two items above can be fitted without the need for a full service.
ALL MODELS		
Fails overall leak test	Leak at sight glass	Check/replace sight glass, seal and spring.
		Check sight glass seal location slot for damage.
		Replace filler block
	Leak at seals	
	Bypass control plate O ring	Establish leak with leak
	Bypass adjuster O ring	detector spray.
	Closing mechanism O ring	Replace O rings and seals
	Closing mechanism bal seal	
	Back plug O ring	
	Needle clamp screw sealing washers	
	Coil O seals	
	Vapour chamber to valve block connector O ring	
	Vapour chamber to valve block O ring	
	Valve block to gas flow plate O ring	
	Needle bal seal	
	Needle housing front O ring	

SERVICE PROCEDURES

Fault	Cause	Treatment
Fails overall leak check	Coil split	Replace
	Coil clamps loose	Crimp tighter
	O rings leaking at back of filler	Replace
	Filler loose	Tighten
	Filler incorrectly clamped	Tighten
Output with vaporizer off	Closing mechanism leak	Check seat and plunger for damage
	Jamming closing mechanism shaft	Check for free movement and replace if necessary.
	Needle incorrectly adjusted	Check and adjust as required
	O ring leak between gas flow plate and bypass plate	Replace
	TC O ring leak	Replace
	Rear needle housing O ring leak	Replace
	Wrong agent	Drain and dry WARNING - Danger of malignant hypothermia.
Output outside allowed tolerances		
High output	Wrong agent	Drain and dry ***WARNING - danger of malignant hypothermia.*** ***See 6.3.2 (1.f)***
	High bypass resistance	Reset bypass adjuster See operation 3. section 6.5
	Misadjusted needle	Unscrew needle housing
	Leak through TC O ring	
	Leak through gas flow plate to bypass plate O ring	Replace
	Leak through bypass plate lower O ring	Replace
	Contamination between bypass plates	Strip and clean

SERVICE PROCEDURES

Fault	Cause	Treatment
Low output	Needle housing screwed out too far	Adjust (screw in)
	Wrong agent	Drain and dry WARNING - danger of malignant hypothermia.
	No agent	Half fill with correct anaesthetic agent.
	Low agent	Half fill with correct anaesthetic agent.
	Low bypass resistance	Reset see operation 3. section 6.5. Note: Carry out operation 2, and then repeat 3. if correct resistance cannot be achieved.
Low output	Closing mechanism not opening fully	Check shaft for free movement.
	Leak at coiled tube	Replace
	Leak to atmosphere	Refer to failure during overall leak check
Flow sensitivity excessive	Valve block not tightened down evenly.	Loosen and retighten to correct procedure.
	Dirty or damaged needle or seat	Replace
	Dirty or damaged bypass plate	Replace
	Dirty or damaged bypass control plate	Replace
	Damaged O rings	Replace

7. SPARE PARTS LIST

Covers, label sets, knob assembly, and connector block fixings

Wick, gas flow plate, and TC sleeves

Bypass plate and bypass control plate

Vapour control cam assembly, and dial stop mechanism

Interlock lever and shaft

Vapour control needle

Closing mechanism

Vapour chamber coil

Agent specific (keyed) filler block

Screw cap filler block

NOTE See Appendix for parts list for Abbott Quik Fil filler block.

Selectatec compatible connector block (including interlock)

Back entry connector block (including interlock)

Cagemount connector block

'Plug-in' (Dräger compatible) connector block

Service kits

Selectatec non-interlock to interlock upgrade kit

SPARE PARTS LIST

Ref.	Part No.	Description	No. Off
Covers, Label Sets, Knob Assembly, and Connector Block Fixings			
1	408122	Cover Assembly (with Penlon logo)	1
	022541	Insert	2
2	01267	Screw (front) for cover assembly	1
3	01091	Screw (rear) for cover assembly	2
4	24072	Lid	1
5	01001	Screw for lid	2
6	15203	Label set (Halothane)	1
	15204	Label set (Enflurane)	1
	15205	Label set (Sevoflurane)	1
	15206	Label set (Isoflurane)	1
7	01235	Screw	2
8	408164	Knob bar	1
9	019009	Screw	1
10	408162	Dial moulding	1
	022528	Insert	1
11	01031	Screw – connector block to valve block	3
12	041220	O ring – connector block to valve block	2
13	408134	Cover – vapour chamber	1
14	15489	Label strip – Halothane	1
	15490	Label strip – Isoflurane	1
	15491	Label strip – Enflurane	1
	15492	Label strip – Sevoflurane	1

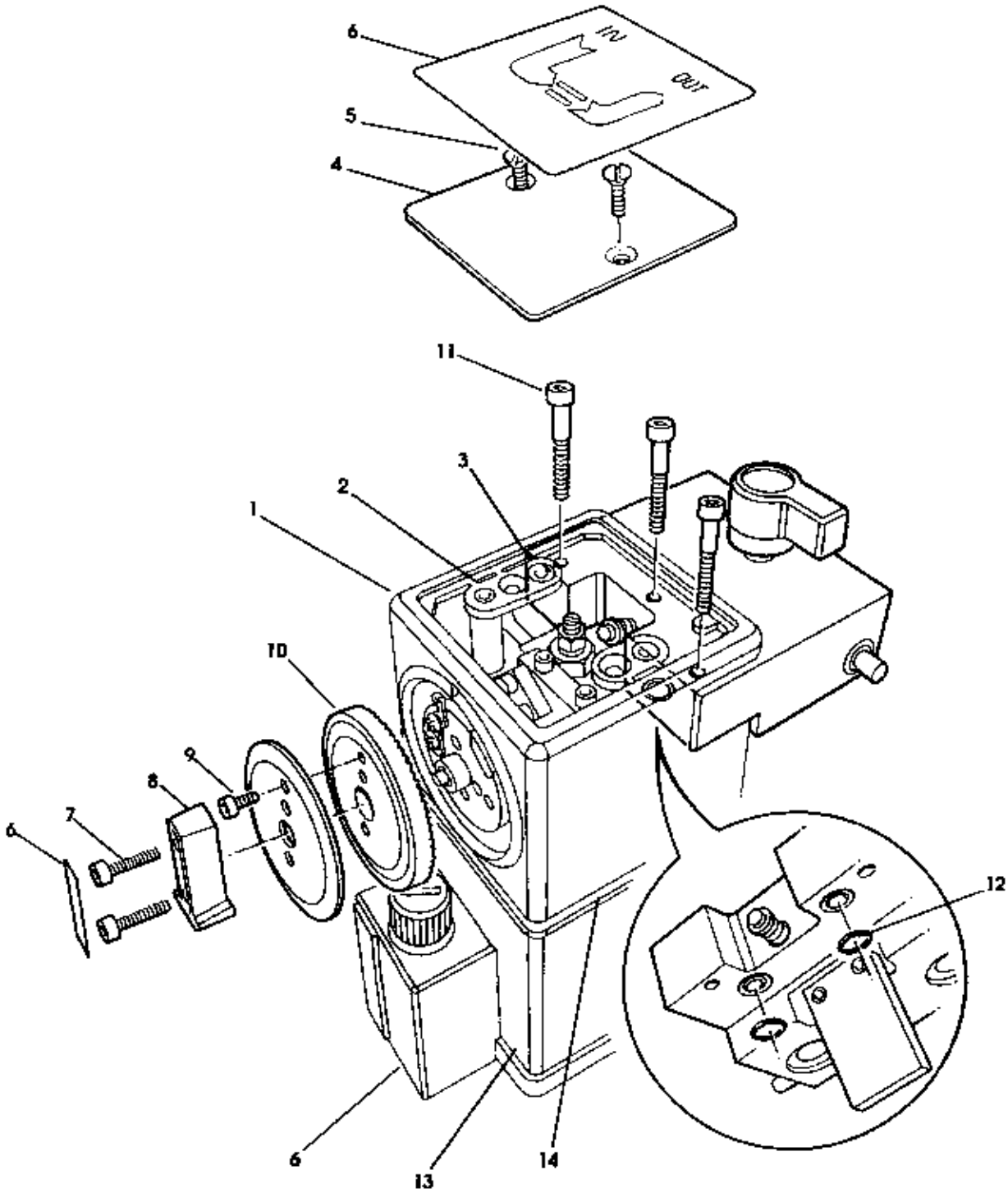
6
IN
OUT
5
4
11
3
2
1
10
9
8
7
6
12
6
13
14

SPARE PARTS LIST

Ref.	Part No.	Description	No. Off
Wick, Gas Flow Plate, and TC Sleeves			
1	408143	Wick seal	1
2	408156	Sleeve	1
3	408121	Wick assembly	1
4	408141	Clamp plate	1
5	019082	Screw	3
6	408070	Gas flow plate	1
7	408177	Sealing ring – gas flow plate to vapour chamber	1
8	408184	Spacer	1
9	041231	O ring	1
10	408167	Outer sleeve	1
11	408170	Sleeve No. 1	1
12	408173	Sleeve No. 2	1
13	408176	Sleeve No. 3	1
14	408179	Sleeve No. 4	1
15	408182	TC centre	1
16	031043	Spring	1
17	041235	O ring (bypass plate)	1
18	041234	O ring (gas flow plate)	1

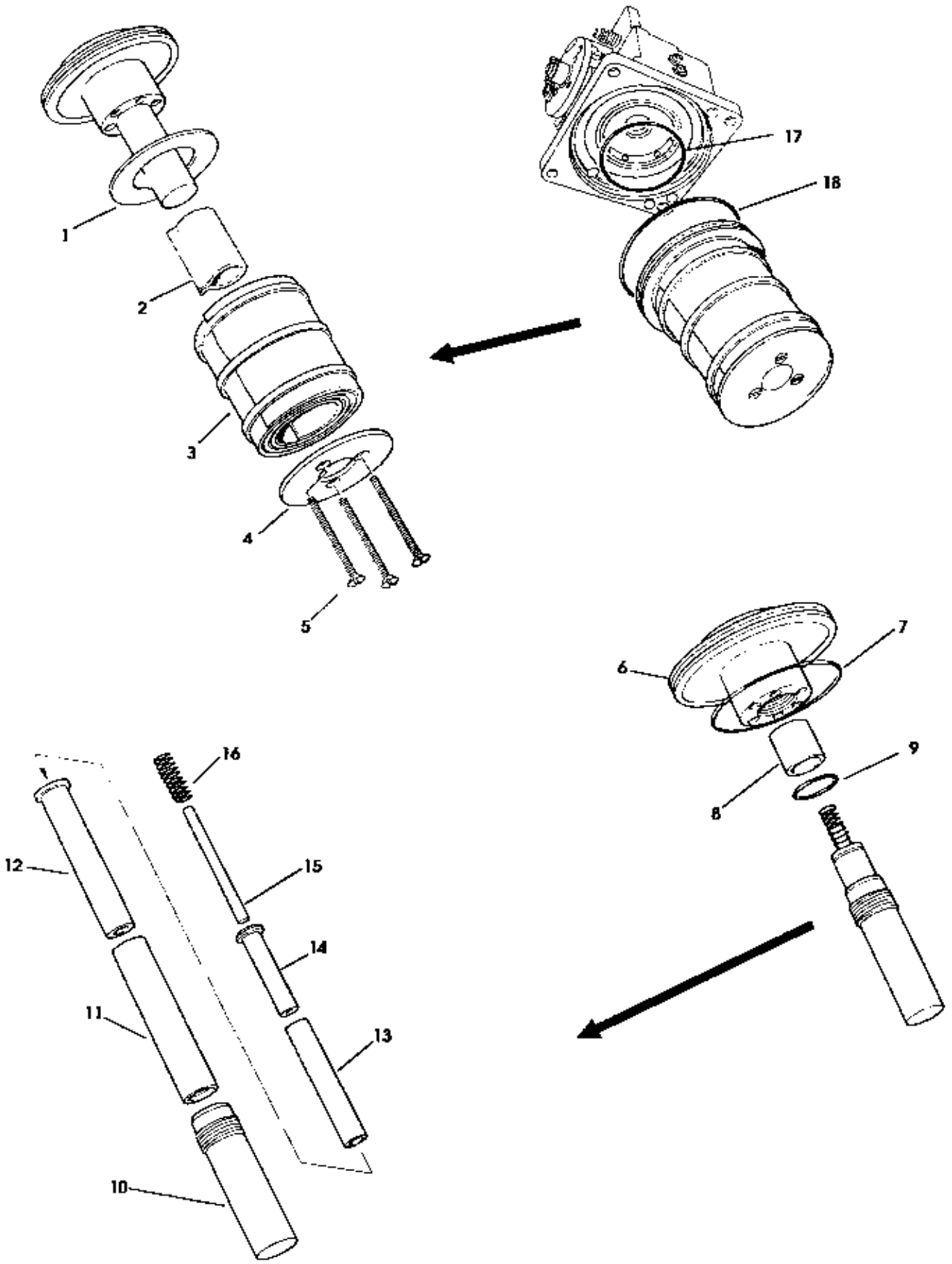
1
2
3
4
5
6
7
8
9
10
11
12
13
14
15
16
17
18

SPARE PARTS LIST

Ref.	Part No.	Description	No. Off

Bypass Plate and Bypass Control Plate

1	408084	Nut	1
2	408080	Nut	1
3	408082	Adjuster nut	1
4	031038	Spring	3
5	041220	O ring – Viton (9.1 I.D.)	1
6	408074	Bypass control plate	1
7	041215	O ring – Viton (4.1 I.D.)	1
8	408076	Adjuster shaft	1
9	408072	Bypass plate	1
10	041233	O ring – Viton (68 I.D.)	1
11	041232	O ring – Viton (66 I.D.)	1

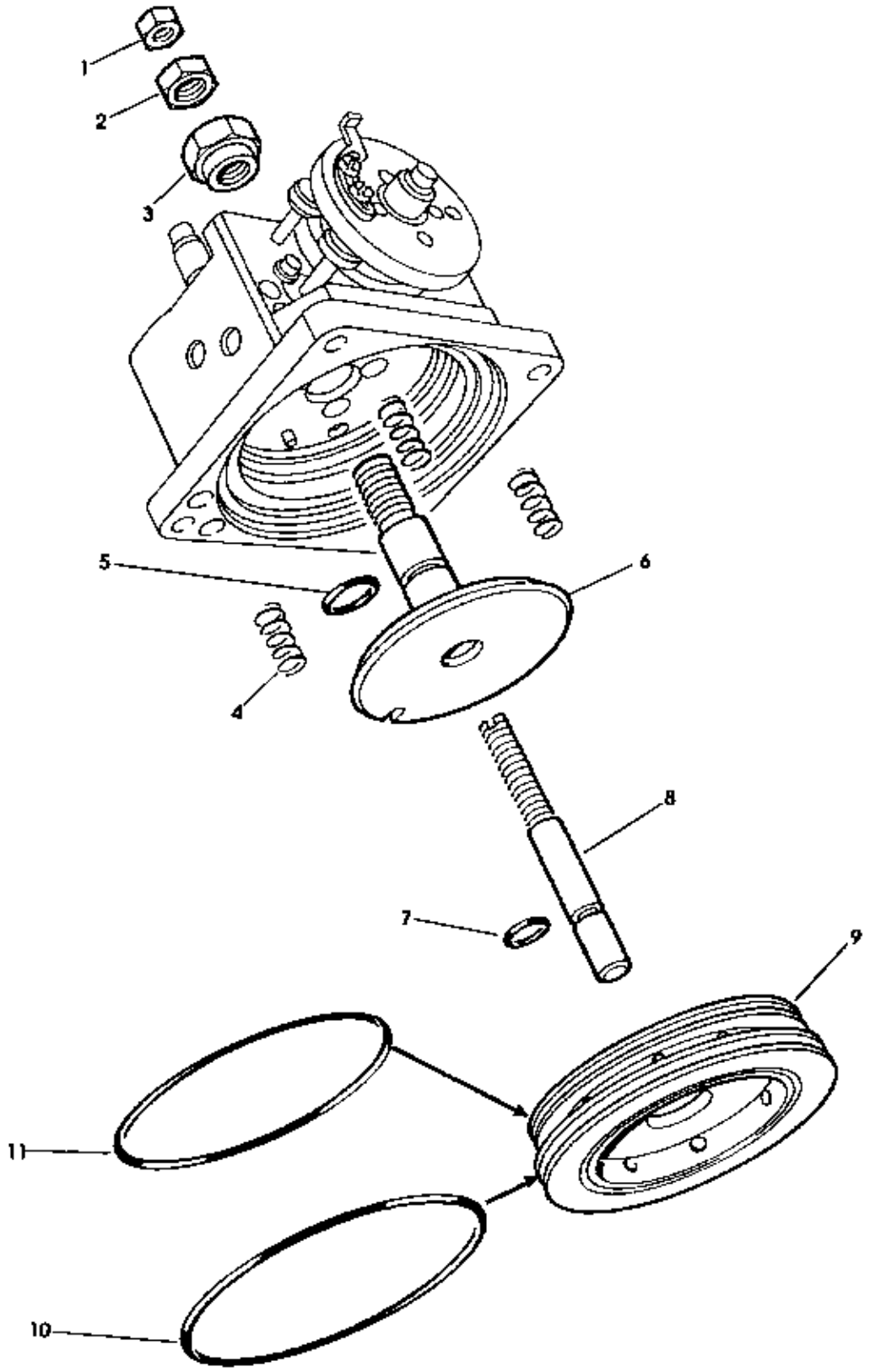
1
2
3
4
5
6
7
8
9
10
11

SPARE PARTS LIST

Ref.	Part No.	Description	No. Off

Vapour Control Cam Assembly and Dial Stop Mechanism

1	01267	Screw	2
2	408065	Support block	1
3	031008	Spring	1
4	24058	Click pin	1
5	408063	Dial stop (zero position)	1
6	020418	Circlip	1
7	408064	Dial stop plate	1
8	408363	Dial stop (max. position)	1
9	019057	Screw	2
10	031035	Spring	1
11	408061	Cam locking shaft	1
12	037003	Thrust bearing	2
13	408062	Pin	1
14		Cam (Agent specific - see chart below for part no.)	1
15	025005	Spacer	1
16	019052	Grub screw (M3 x 3)	2

Cam part numbers

408831	Halothane 4%
	Isoflurane 5%
	Halothane 5%
408837	Halothane 8%
	Sevoflurane 5%
408843	Sevoflurane 7%
	Sevoflurane 8%
408839	Enflurane 5%
408841	Enflurane 7%

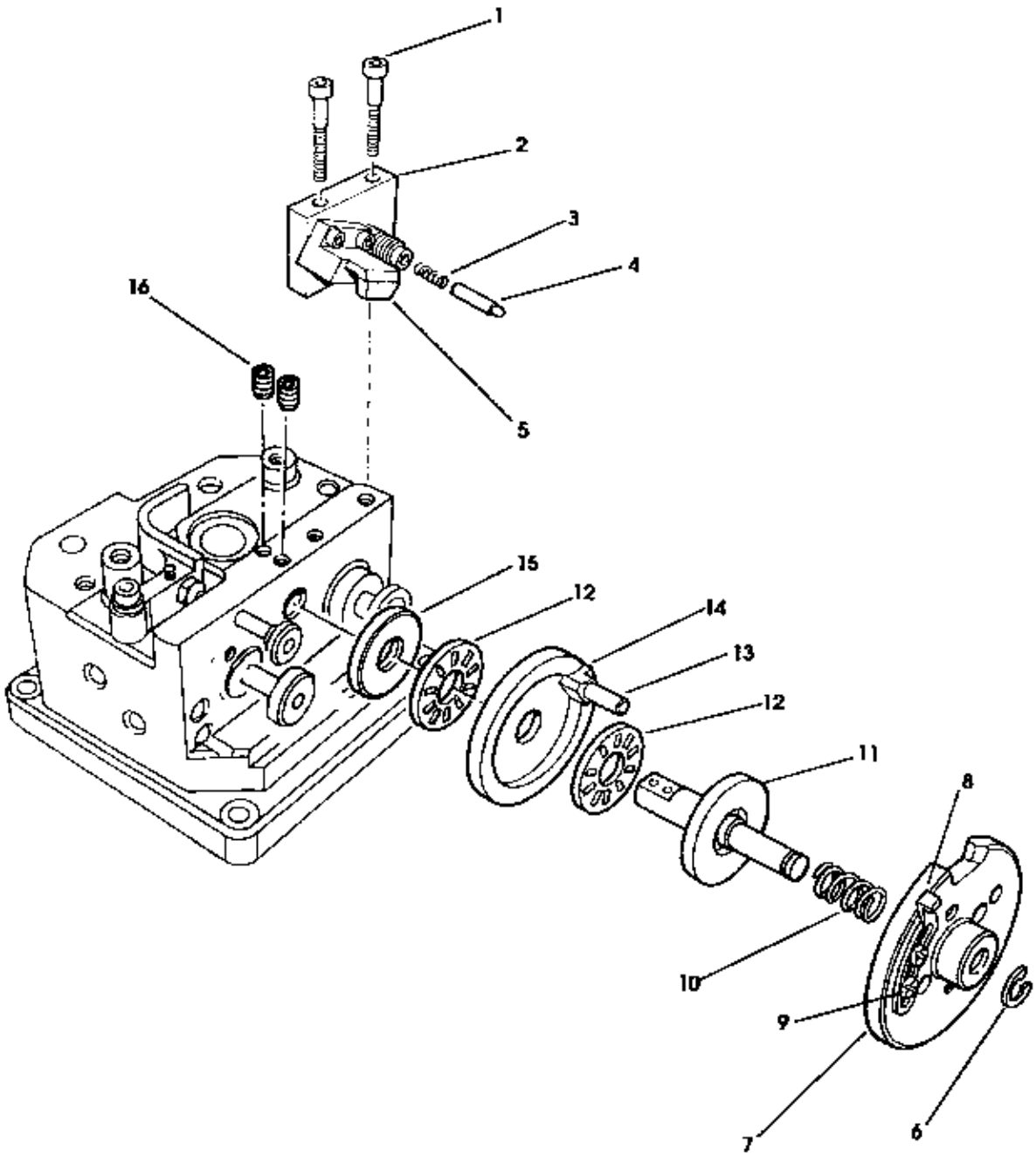
1
2
3
4
16
5
15
12
14
13
12
11
8
10
9
7
6

SPARE PARTS LIST

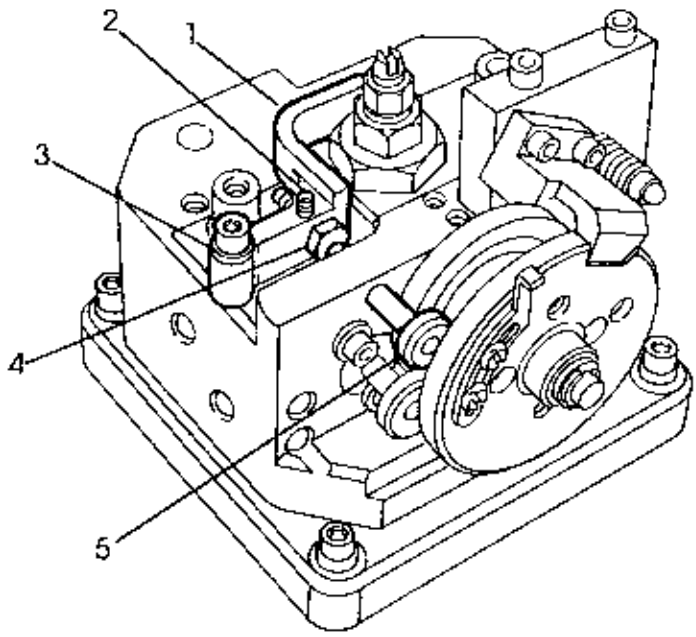

Ref.	Part No.	Description	No. Off
Interlock Lever and Shaft			
1	408352	Interlock lever	1
2	019032	Screw (M3)	1
3	408362	Sleeve	1
	01011	Washer (M4)	1
	01043	Screw (M4)	1
4	24379	Adjustment screw	1
5	408320	Interlock shaft	1

SPARE PARTS LIST

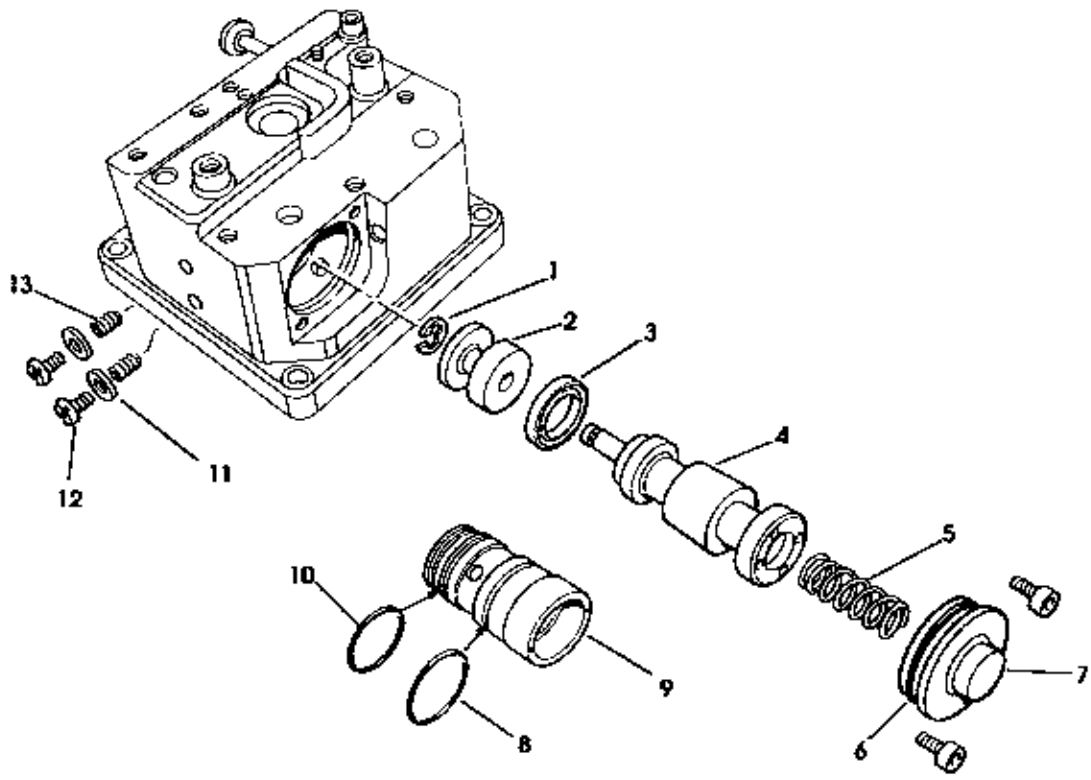

Ref.	Part No.	Description	No. Off
Vapour Control Needle			
1	020409	Circlip	1
2	408050	Cam follower	1
3	042813	Ball seal	1
4	408036	Needle	1
5	031036	Spring	1
6	041237	O ring	1
7	408088	Back plug	1
8	041238	O ring	1
9	408038	Needle housing	1
10	041239	O ring	1
11	025608	Washer (M3, nylon)	2
12	019118	Screw	2
13	01052	Grub screw	2

SPARE PARTS LIST

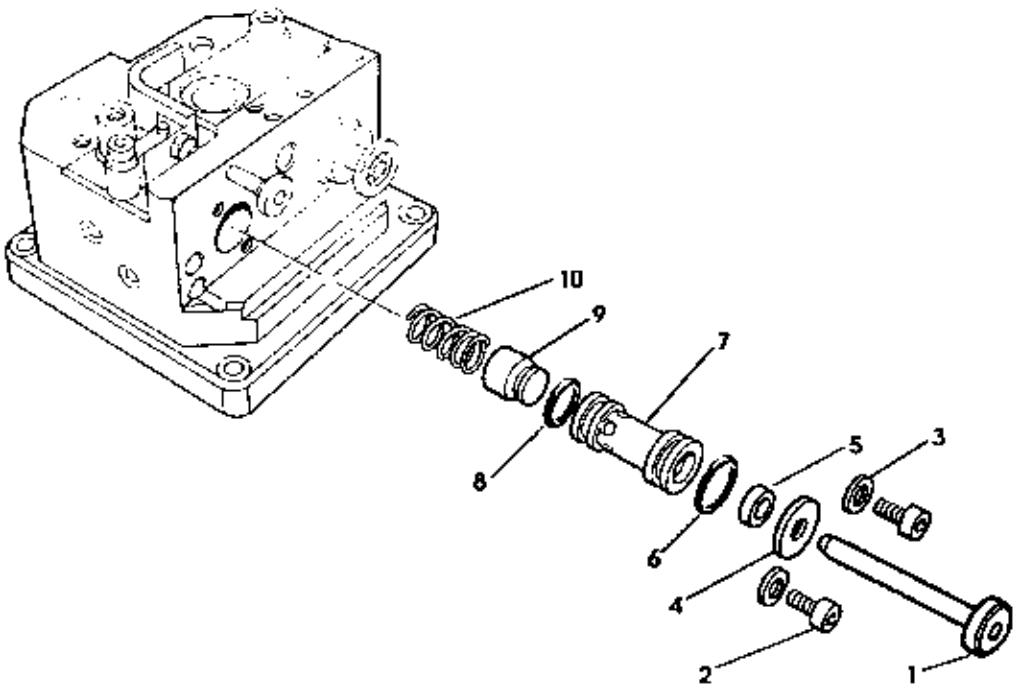

Ref.	Part No.	Description	No. Off
Closing Mechanism			
1	408020	Closing mechanism shaft	1
2	019011	Screw (M3 x 6)	2
3	01067	Washer (M3)	2
4	408042	Retaining washer for Bal seal	1
5	042809	Bal seal	1
6	0226	O ring	1
7	408041	Spool assembly	1
8	041221	O ring	1
9	408021	Seal assembly	1
10	031037	Spring	1

SPARE PARTS LIST

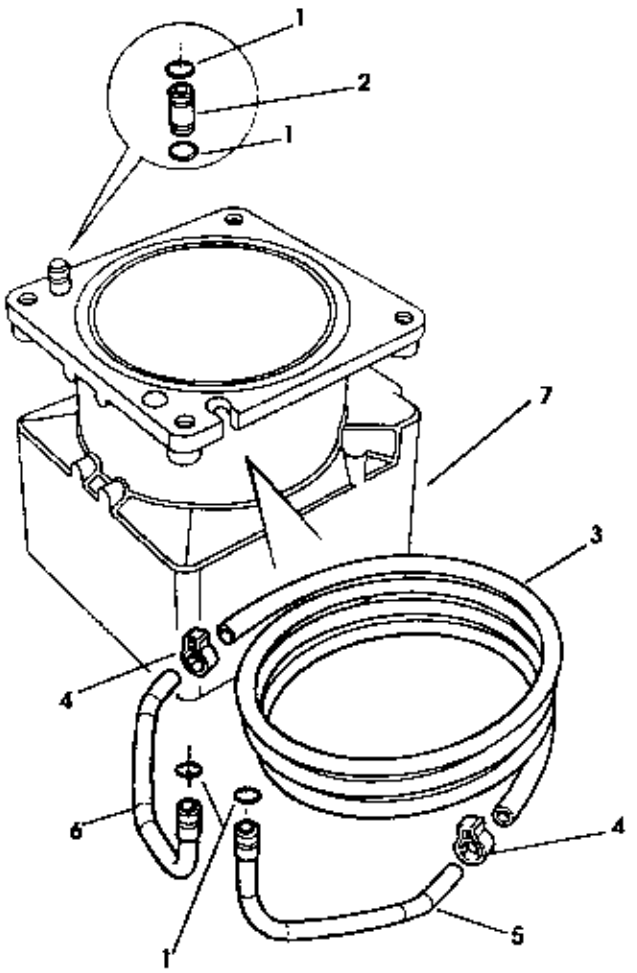

Ref.	Part No.	Description	No. Off
Vapour Chamber Coil			
1	041242	O ring	4
2	408094	Connector – vapour chamber to valve block	1
3	462090	Coil – 1040 mm	1
4	054931	Clip	2
5	408026	Coil connector tube	1
6	408025	Coil connector tube	1
7	408132	Vapour chamber	1

SPARE PARTS LIST

Ref.	Part No.	Description	No. Off
Agent Specific (Keyed) Filler			
1*	408224	Filler block assembly – Halothane	1
	408225	Filler block assembly – Enflurane	1
	408226	Filler block assembly – Isoflurane	1
	408227	Filler block assembly – Sevoflurane	1
2	408271	Filler knob	1
3	019070	Screw	1
4	01059	Screw	3
5	408218	Shaft and cap assembly	1
6	042811	Seal	1
7	042812	Seal	2
8	408276	Spacer	1
9	408296	Seal moulding	1
10	01059	Screw	1
11	408250	Backing piece	1
12	408255	Ball	1
13	408298	Glass	1
14	031704	Spring	1
15	408248	Seal	1
16	408246	Bezel	1
17*	24149	Clamp screw	1
	020404	Circlip (for clamp)	1
18	408290	Side plate – Halothane	1
	408292	Side plate – Enflurane	1
	408285	Side plate – Isoflurane	1
	408288	Side plate – Sevoflurane	1
19	019009	Screw	4
20	408294	Seal Pad	1
21	01277	Pin	1
22	408229	Plug and cord – Halothane/Enflurane	1
	408228	Plug and cord – Isoflurane/Sevoflurane	1
	011135	Cord	1
23	01031	Screw – filler block to vapour chamber	1
24	041215	O ring (4.1 I.D.) – filler block to vapour chamber	4
25	041204	O ring (5.1 I.D.) – filler block to vapour chamber	1
	057002	Loctite 222 (for screw, item 8, above)	

Note: *(A) Items 2 to 25 are included in item 1.*
(B) On vaporizers built before Nov. 1995, order clamp screw and circlip (item 17) together.

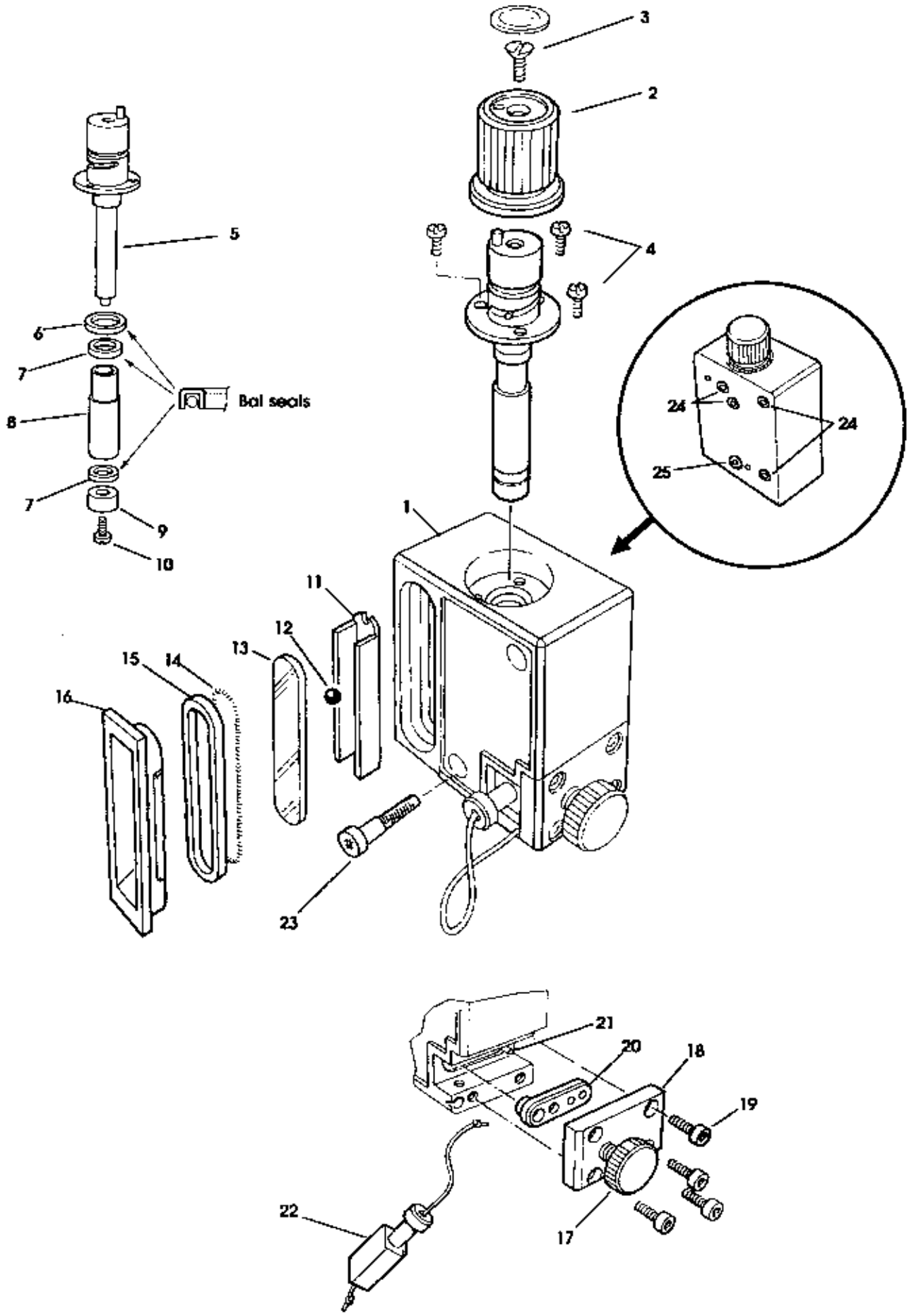
3
2
5
4
6
7
Bal seals
8
7
9
10
24
24
25
1
11
12
13
15
14
16
23
21
20
18
19
22
17

SPARE PARTS LIST

Ref.	Part No.	Description	No. Off

Screw Cap Filler

1	408220	Screw cap filler assembly	1
	Note: the above assembly includes the following parts		
2	24029	Filler knob	1
3	408235	Shaft	1
4	408239	Seal	1
5	020214	Rivet	1
6	408238	Shaft housing	1
7	041218	O ring	1
8	408250	Backing piece	1
9	408255	Ball	1
10	408298	Glass	1
11	031704	Spring	1
12	408248	Seal	1
13	408246	Bezel	1
14	01031	Screw – filler block to vapour chamber	1
15	041215	O ring (4.1 I.D.) – filler block to vapour chamber	4
16	041204	O ring (5.1 I.D.) – filler block to vapour chamber	1

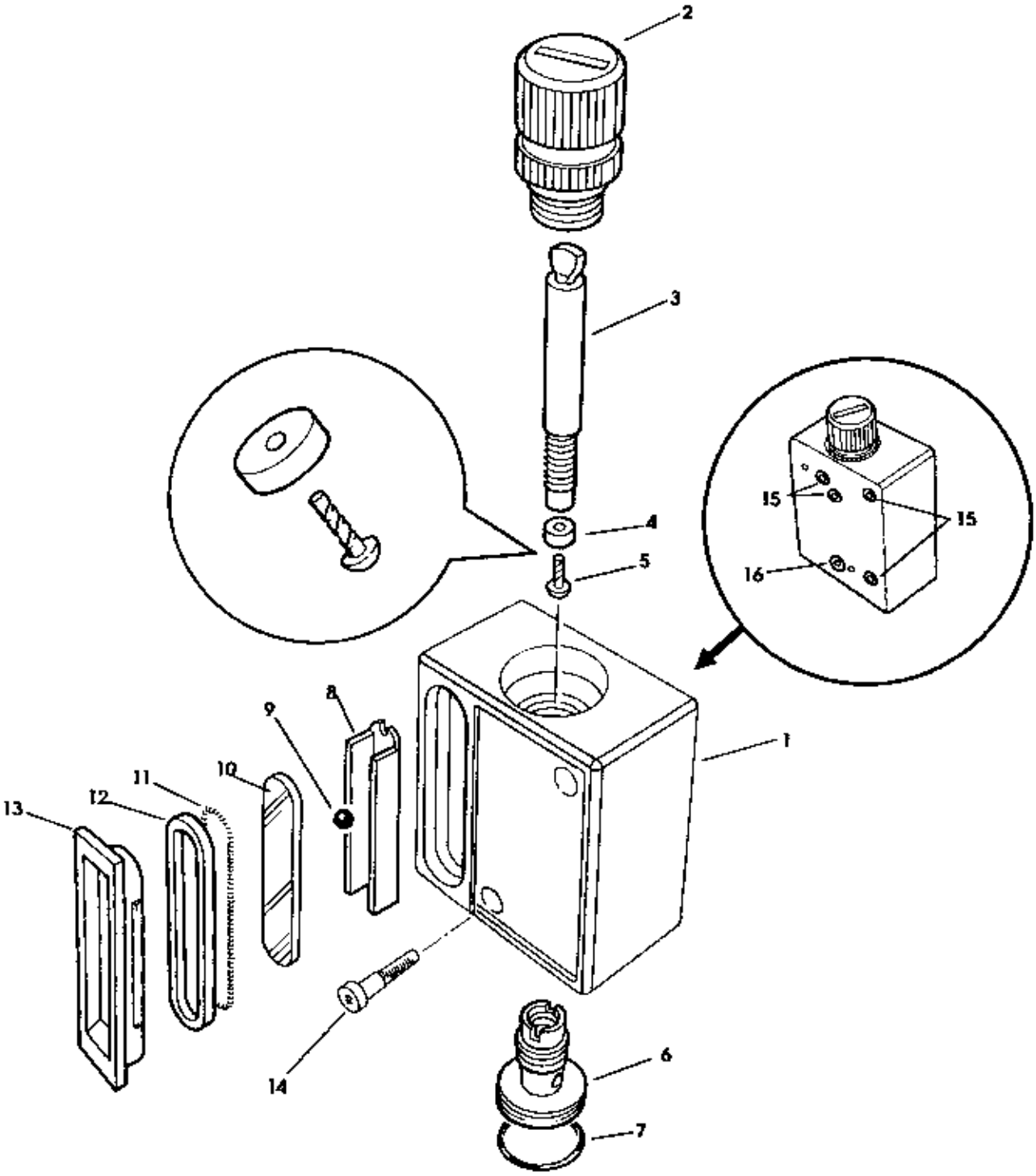
2
3
4
5
15
15
16
1
8
9
10
11
12
13
14
6
7

SPARE PARTS LIST

Ref.	Part No.	Description	No. Off

Selectatec Compatible Connector Block (including Interlock)

1	15207	Label - knob	1
2	01053	Screw (M4 x 8)	1
3	408393	Knob	1
4	408391	Knob shaft	
	020510	Dowel pin (3 x 20)	
5	408392	Locking shaft	1
6	031039	Spring	1
7	408394	Screw	1
8	408346	Connector block - Selectatec Compatible	1
9	24372	Support ring	3
10	031024	Spring	3
11	408354	Interlock push rod long	1
12	408356	Interlock push rod - short	1
13	24370	Bush	2
14	408349	Support plate	1
	01014	Screw	2
	057001	Loctite 601(use on mating surfaces of support plate and connector block - see 6.4.8.4)	
15	020418	Circlip	3
16	24378	Locking pin	1
	029008	Rocol Kilopoise (use on tip only of locking pin - see 6.4.8.5)	
17	019103	Screw (non-interlock only)	
18	041220	O ring - connector block to valve block	2

WARNING LABEL 15.3.5.5

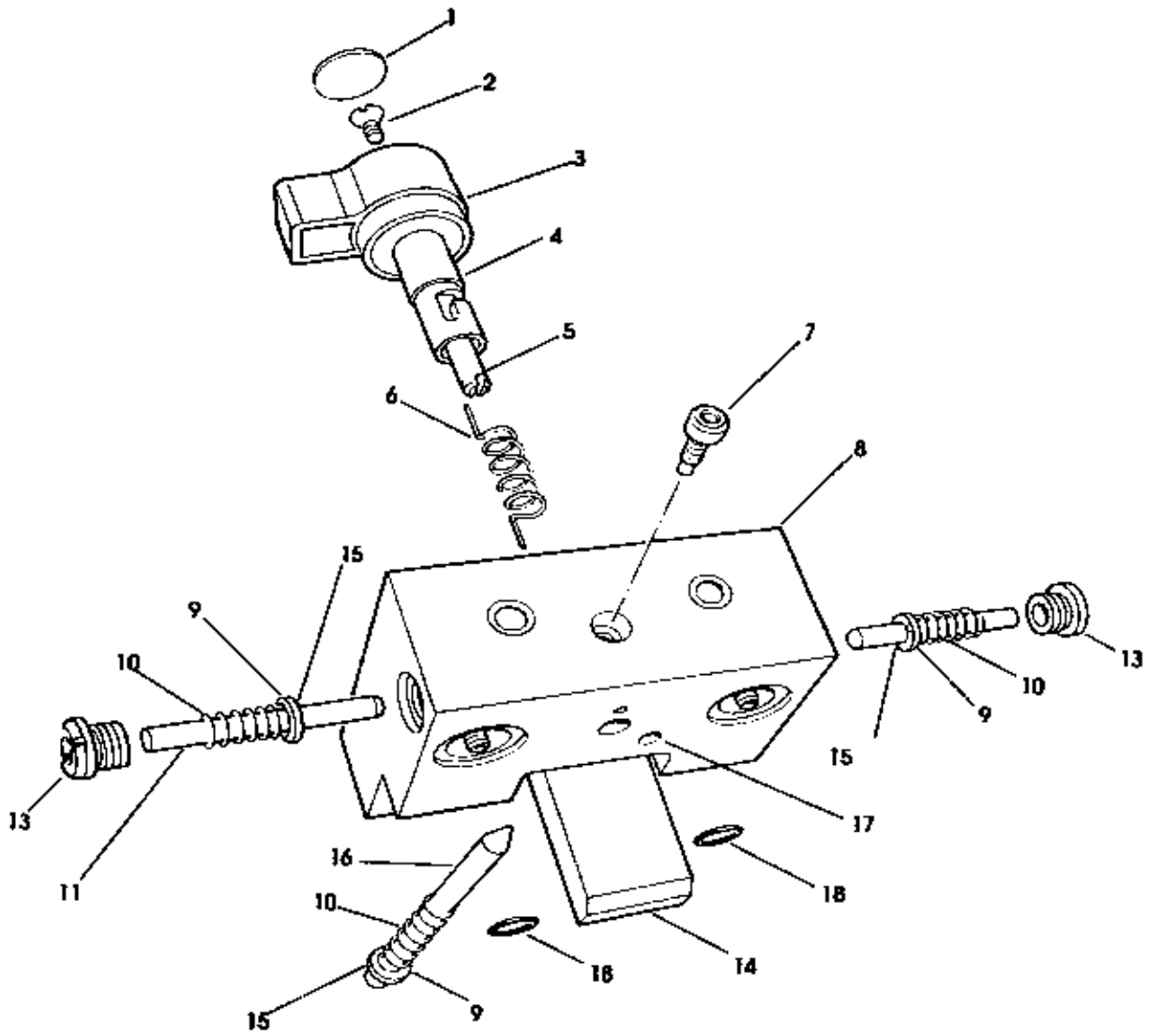
1
2
3
4
5
6
7
8
9
10
11
13
14
15
16
17
18

SPARE PARTS LIST

Ref.	Part No.	Description	No. Off

Back Entry Connector Block (including Interlock)

1	408370	Connector block – Back Entry	1
2	041220	O ring	1
3	408373	Back plate	1
4	01130	Screw	4
5	408341	Connector block - Back Entry with interlock	1
6	041206	O ring	2
7	408343	Back plate	1
8	01056	Screw	4
9	24372	Support ring	3
10	031024	Spring	3
11	408354	Interlock push rod - long	1
12	408356	Interlock push rod – short	1
13	24370	Bush	2
14	408360	Locking pin	1
	029008	Rocol Kilopoise (use on tip only of locking pin – see 6.4.8.3)	
15	020418	Circlip	3
16	041220	O ring – connector block to valve block (not shown)	2

Back Entry

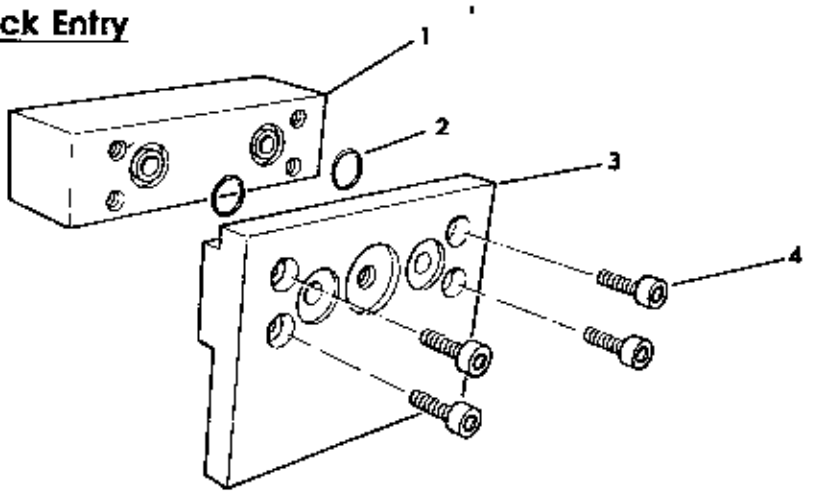

Back Entry with Interlock

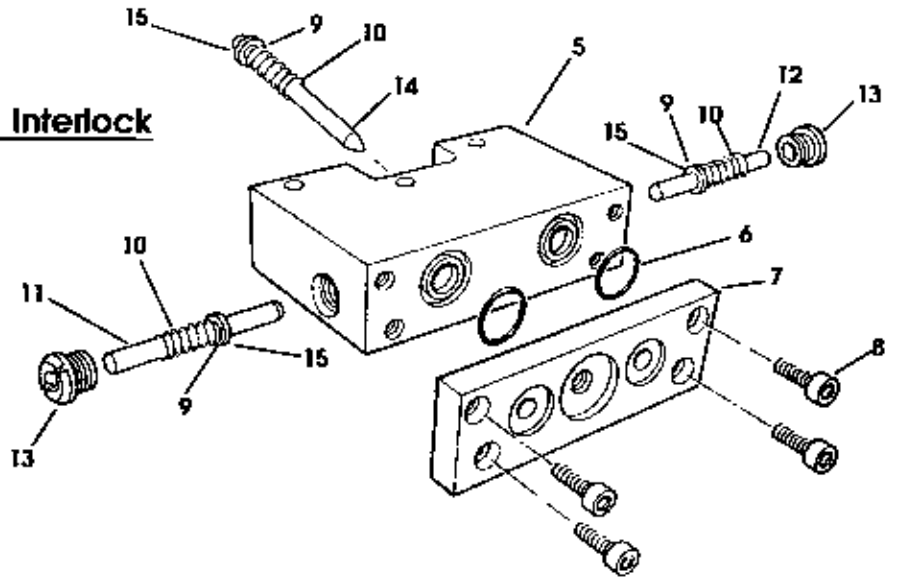

SPARE PARTS LIST

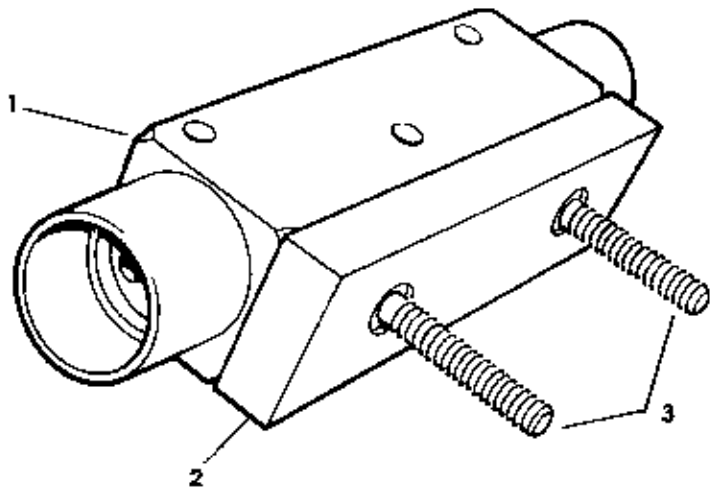

Ref.	Part No.	Description	No. Off

Cagemount Connector Block

1	408304	Cagemount connector block assembly	1

Note, the above assembly includes the following parts:

2	24050	Back plate	1
3	23195	Stud	2

Items not shown:

	01012	Nut (M6)	2
	01015	Washer (M6)	2
	22693	Shim	5
	36052	Rail clamp	1
	041220	O ring – connector block to valve block	2

SPARE PARTS LIST

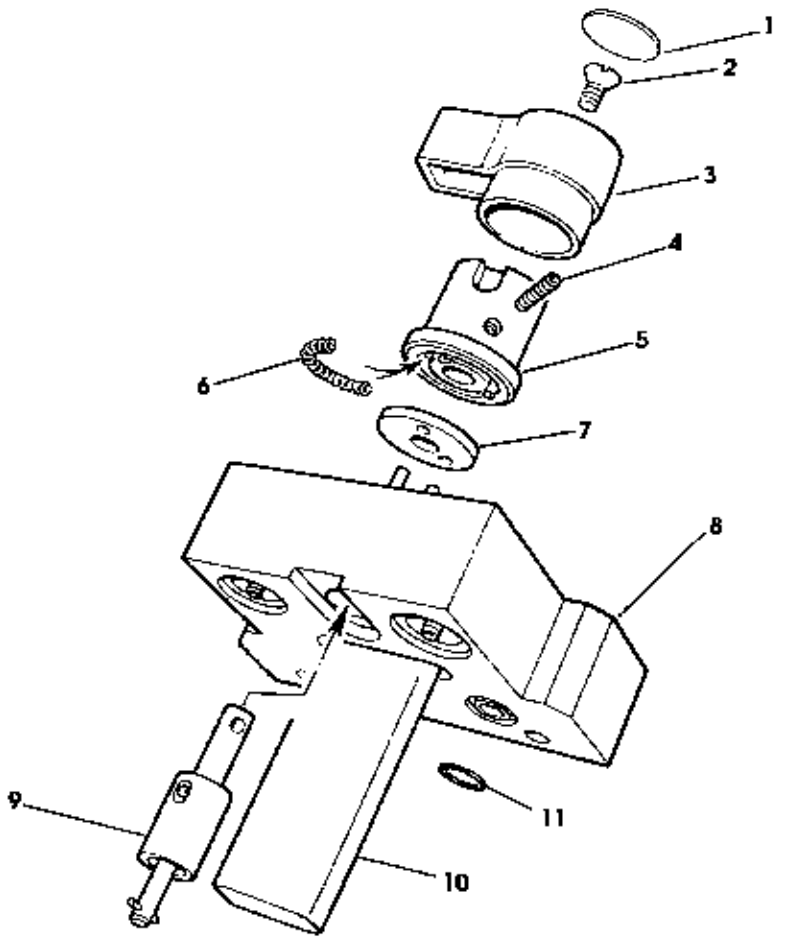

Ref.	Part No.	Description	No. Off

'Plug-in' (Dräger Compatible) Connector Block

	408314	'Plug in' (Drager Compatible) connector block assembly	1

Note, the above assembly includes the following parts:

1	15208	Label	1
2	01053	Screw (M4)	1
3	408393	Knob moulding	1
4	019081	Screw (M3)	1
5	408326	Knob assembly	1
6	031028	Spring	1
7	24647	Washer	1
8	408367	Connector block	
9	24628	Shaft	1
10	408376	Support plate	1
11	041220	O ring - connector block to valve block	2

SPARE PARTS LIST

Ref.	Part No.	Description

Service Kits

54538	Halothane - Agent Specific (Key) Filler
54539	Halothane - Screw Cap Filler
54540	Enflurane - Agent Specific (Key) Filler
54541	Enflurane - Screw Cap Filler
54542	Isoflurane - Agent Specific (Key) Filler
54543	Isoflurane - Screw Cap Filler
54544	Sevoflurane - Agent Specific (Key) Filler
54545	Sevoflurane - Screw Cap Filler
54913	Sevoflurane - Abbott Quik Fill Filler

See following pages for a complete list of the parts contained in each kit.

SPARE PARTS LIST

Part No.	Description	No. Off

Service Kits – Agent Specific (Key) Filler

Each kit for vaporizers with an agent specific (keyed) filler contains the following parts, plus a label set (see end of list) as required for the vaporizer agent type

Part No.	Description	No. Off
408121	Wick assembly	1
24058	Click pin	1
408143	Seal – wick	1
408246	Bezel	1
408248	Seal – filler sight glass	1
408250	Backing piece	1
408255	Ball	1
020409	Circlip needle	1
020418	Circlip – dial	1
020404	Circlip – filler clamp screw	1
025608	Sealing washer	2
031704	Spring - sight glass	1
408156	TC sleeve	1
0226	O ring (large) – closing mechanism	1
041242	O ring	4
	(coil assembly – 2)	
	(vapour chamber connector – 2)	
041204	O ring – filler block to vapour chamber	1
041206	O ring – Back Entry Interlock block	2
041215	O ring	5
	(filler block to vapour chamber – 4)	
	(adjuster shaft – 1)	
041220	O ring	5
	(connector block – 2)	
	(Back Entry block assembly – 2)	
	(bypass control plate – 1)	
041221	O ring (small) – closing mechanism	1
041231	O ring - T.C. assembly	1
041232	O ring (medium) – bypass plate	1
041233	O ring (large) – bypass plate	1
041234	O ring – gas flow plate	1
041235	O ring (small) – bypass plate	1
408177	Sealing ring – vapour chamber	1
041237	O ring – back plug	1
041238	O ring (medium) – needle housing	1
041239	O ring (small) needle housing	1
041212	O ring – Cagemount block	2
041240	O ring – male taper - Cagemount block	1
042809	Ball seal – closing mechanism	1
042813	Ball seal – needle	1
054931	Coil clip	2
462090	Coil tube	1040 mm
408294	Seal pad	1
408296	Seal moulding	1
011135	Black nylon cord	100 mm
042811	Ball seal (large) filler	1
042812	Ball seal (small) - filler	2
15446	Label - warranty	1
15207	Label knob - Selectatec	1
15208	Label knob – Drager 'Plug-in'	1

Label Set (one set included in each kit, depending on agent)

15203	*Label set – Halothane*	1
15204	*Label set - Enflurane*	1
15205	*Label set – Sevoflurane*	1
15206	*Label set - Isoflurane*	1

SPARE PARTS LIST

Part No.	Description	No. Off

Service Kit – Screw Cap Filler

Each kit for vaporizers with a screw cap filler contains the following parts, plus a label set (see end of list) as required for the vaporizer agent type.

408121	Wick assembly	1
24058	Click pin	1
408143	Seal – wick	1
408246	Bezel	1
408248	Seal - filler sight glass	1
408250	Backing	1
408255	Ball	1
020409	Circlip – needle	1
020418	Circlip - dial	1
025608	Sealing washer	2
031704	Spring – sight glass	1
408156	T.C sleeve	1
0226	O ring (large) – closing mechanism	1
041242	O ring	4
	(coil assembly – 2)	
	(vapour chamber connector 2)	
041204	O ring - filler block to vapour chamber	1
041206	O ring - Back Entry interlock block	2
041215	O ring	5
	(filler block to vapour chamber – 4)	
	(adjuster shaft – 1)	
041220	O ring	5
	(connector block – 2)	
	(Back Entry block – 2)	
	(bypass control plate 1)	
041221	O ring (small) – closing mechanism	1
041231	O ring – T.C. assembly	1
041232	O ring (medium) – bypass plate	1
041233	O ring (large) – bypass plate	1
041234	O ring gas flow plate	1
041235	O ring (small) – bypass plate	1
408177	O ring – vapour chamber	1
041237	O ring – back plug	1

041238	O ring (medium) - needle housing	1
041239	O ring (small) - needle housing	1
041212	O ring – Cagemount block	2
041240	O ring - male taper – Cagemount block	1
041218	O ring shaft housing – filler block	1
042809	Ball seal – closing mechanism	1
042813	Ball seal – needle	1
054931	Coil clip	2
462090	Coil tube	1040 mm
24029	Filler cap assembly	1
408239	Seal filler shaft	1
020214	Seal rivet	1
15446	Label – warranty	1
15207	Label – knob – Selectatec	1
15208	Label – knob – Drager 'Plug–in'	1

Label Set (one set included in each kit, depending on agent)

15203	*Label set Halothane*	1
15204	*Label set - Enflurane*	1
15205	*Label set – Sevoflurane*	1
15206	*Label set – Isoflurane*	1

SPARE PARTS LIST

Part No.	Description	No. Off

Service Kits - 8% Sevoflurane with Abbott Quik Fill Filler

Each kit for 8% Sevoflurane vaporizers with an Abbott Quik Fill filler block contains the following parts.

408121	Wick assembly	1
24058	Click pin	1
408143	Seal - wick	1
408246	Bezel	1
408248	Seal - filler sight glass	1
408250	Backing piece	1
408255	Ball	1
409043	Plug filler block	1
409050	Plunger seal filler cap	1
409027	Drain screw assembly - filler block	1
020409	Circlip needle	1
020418	Circlip dial	1
025608	Sealing washer	2
031704	Spring sight glass	1
408156	TC sleeve	1
0226	O ring (large) - closing mechanism	1
041242	O ring coil assembly	2
	O ring vapour chamber connector	2
041202	O ring - filler block to vapour chamber	1
041206	O ring - Back Entry interlock block	2
041215	O ring filler block to vapour chamber	4
	O ring adjuster shaft	1
041220	O ring connector block	2
	O ring Back Entry block assembly	2
	O ring - bypass control plate	1
041221	O ring (small) - closing mechanism	1
041231	O ring - T C assembly	1
041232	O ring (medium) bypass plate	1
041233	O ring (large) bypass plate	1
041234	O ring - gas flow plate	1
041235	O ring (small) - bypass plate	1
041244	O ring - filler cap	1
408177	Sealing ring - vapour chamber	1

Part No.	Description	No. Off
041237	O ring back plug	1
041238	O ring (medium) - needle housing	1
041239	O ring (small) - needle housing	1
041212	O ring - Cagemount block	2
041240	O ring - male taper Cagemount block	1
042809	Ball seal closing mechanism	1
042813	Ball seal needle	1
054931	Coil clip	2
462090	Coil tube	1040 mm
15446	Label warranty	1
15207	Label knob Selectatec	1
15210	Label set Sevoflurane	1

SPARE PARTS LIST

Ref.	Part No.	Description	No. Off

Selectatec Non-Interlock to Interlock Upgrade Kit (Part No.408820)

408320	Interlock shaft assembly	1
24370	Bush	2
24372	Support ring	3
24378	Locking pin	1
24379	Adjustment screw	1
408352	Interlock lever	1
408354	Push rod – long	1
408356	Push rod – short	1
408362	Lever sleeve	1
01011	Washer - plain M4	1
01043	Screw (M4 x 20)	1
019032	Screw (M3 x 4)	1
020418	Circlip	3
029008	Kilopoise grease	as req'd
031024	Spring	3
057002	Loctite 222	as req'd

APPENDIX

Abbott 'Quik Fil' Filler Block – Service Instructions and Parts List

Service Schedule

6 months

Function test and check for leaks

5 years

Renew sight glass components
Renew drain screw assembly
Renew filler housing seals
Renew filler cap seals
Renew filler block side plug

Service Procedures

Fig. 1

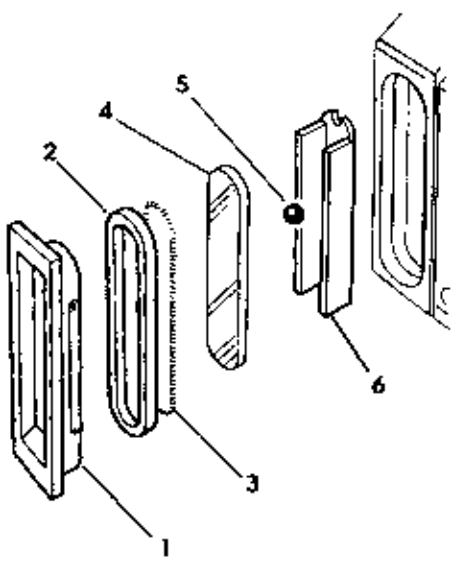

Service Kit Parts	
Ref.	Part No.
1	408246
2	408248
3	031704
5	408256
6	408250

Sight Glass Components – Fig. 1

1. Check that the vaporizer is empty. If necessary, drain the vaporizer, following the instructions given in the User manual.
2. Prise the bezel (1) from the filler block, and discard.
3. Carefully remove the glass seal (2), spring (3), and glass (4).
   Discard the seal and spring.
4. Remove and discard the ball (5) and sight glass backing (6).
5. Fit the new sight glass backing (6) and ball (5).
   Fit the new spring (3) into the sight glass seal (2) then carefully place the glass (4) into the seal.
   Fit the seal / sight glass assembly into the filler block using service tool, Part No. 408874.
   TO ENSURE CORRECT FITMENT, ALWAYS USE THE SERVICE TOOL FOR THIS OPERATION.
   A damaged seal may deteriorate rapidly during vaporizer use.

   Fit the new bezel (1).
6. Refill the vaporizer, following the instructions given in the user manual, and check for leaks.
7. Function test the vaporizer before clinical use.

APPENDIX

Drain Screw Seal – Fig. 2

1. Check that the vaporizer is empty. If necessary, drain the vaporizer, following the instructions given in the User manual.
2. Remove plug (1) and discard, and remove screw (2).
3. Unscrew the drain screw assembly (3) from the filler block using the key.
4. Remove O seal (4) and discard.
5. Fit a new seal (apply Fomblin RT15), and refit the drain screw assembly to the filler block.

   Note that a new drain screw assembly, supplied complete with seals, must be fitted as part of the filler block 5 Year Service (see Parts List, below).
6. Refit screw (2) and fit a new plug (3).
7. Refill the vaporizer, following the instructions given in the user manual, and check for leaks.
8. Function test the vaporizer before clinical use.

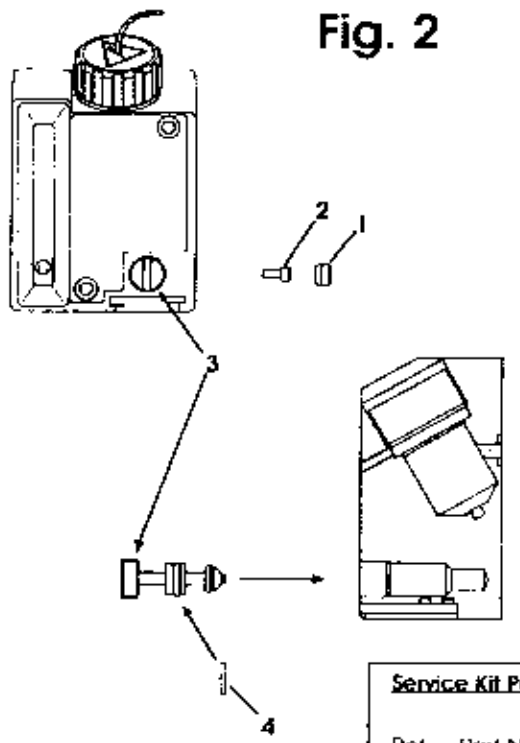

Fig. 2

Service Kit Parts

Ref.	Part No
1	409043
3	409027

Filler Cap Seals – Fig. 3

1. Remove the filler block cap (1).
2. Remove the two screws (2) and separate the cap insert (3) from the cap.
3. Remove the O seals (4) and (5) and discard.
4. Remove the cap insert seal (6) and discard.
5. Fit a new cap insert seal – note orientation, square face into insert.
6. Fit new O seals (4) and (5)
7. Refit the insert and retain with screws (2)
8. Function test the vaporizer before clinical use.

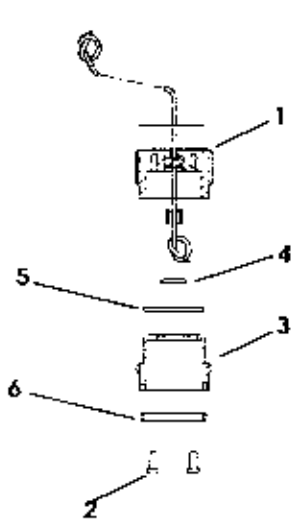

Fig. 3

Service Kit Parts

Ref.	Part No.
4	041231
5	041245
6	409056

APPENDIX

Service Procedures – continued

Filler Housing Seals – Fig. 3 and Fig. 4

1. Check that the vaporizer is empty. If necessary, drain the vaporizer, following the instructions given in the User manual.
2. Detach the filler block from the vaporizer
3. Remove the filler block cap (1).
4. Remove the front label and remove the sleeve locking screw (2).
5. Unscrew the sleeve assembly (3), and remove and discard seals (4) and (5).
6. Remove and discard O seals (6) and (7) from the back of the filler block.
7. Fit new seals (4, and 5) and reassemble the housing assembly into the block.
8. Apply a small amount of Loctite 222 Screwlock to the locking screw (2), refit into the block and locate in the housing counterbore – do not tighten.
9. Using the cap (1), press the housing assembly fully into the block.

   Tighten the locking screw (2).
10. Fit new O seals (6) and (7). Ensure that the larger O seal (7) is in its correct location (see fig. 4).
11. Refit the filler block to the vaporizer.
12. Function test the vaporizer.
13. Fit a new front label to the filler block.

Fig. 4

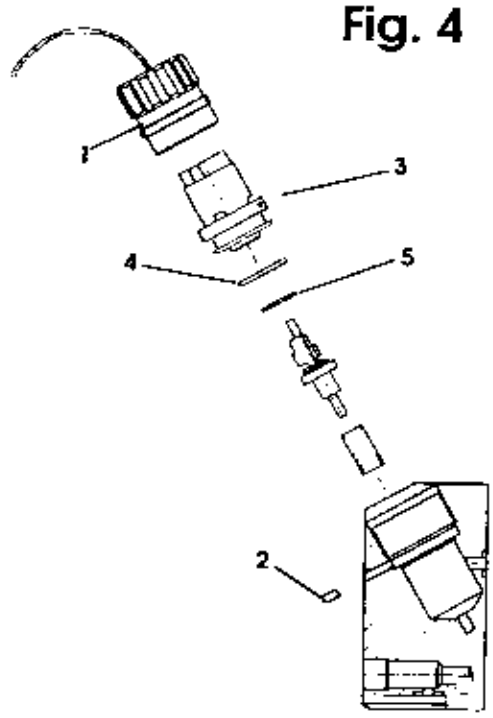

Fig. 5

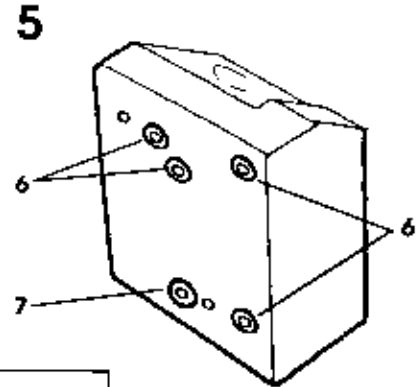

Service Kit Parts

Ref.	Part No.
4	041244
5	409050
6	041215
7	041202

APPENDIX

Parts List

Ref.	Part No.	Qty	Description
1	409041	1	Filler block
2	409054	1	Washer
3	019117	1	Screw M3x6
4*	409043	1	Plug
5	019011	1	Screw M3x6
6*	408246	1	Bezel
7*	408248	1	Seal - sight glass
8*	031704	1	Spring
9	408298	1	Sight glass
10	408256	1	Ball
11*	408250	1	Backing piece
11	409072	1	Cap assembly, comprising:
13	011135	1	Polyester cord (100 mm)
14	15211	1	Label
15	409063	1	Cap
16	409058	1	Bush
17*	041231	1	O seal
18*	041245	1	O seal
19	409047	1	Cap insert
20*	409056	1	Cap seal
21	020806	2	Screw (No 4 x 1/4 in)
22	409035	1	Housing
23*	041244	1	O seal
24*	409050	1	Plunger seal
25	409074	1	Plunger
26	031037	1	Spring
27	019028	1	Screw M3x6
	057002		Loctite 222 Screwlock (use on item 27)
28*	409027		Drain screw assembly, comprising:
29	409037	1	Drain Screw
30	041245	1	O seal
31	409055	1	Seal – drain screw
32	020214	1	Screw (00 x 1/4 in. – hammer drive)
33*	041215	4	O seal
34*	041202	1	O seal
	01031	2	Screw M4x6 (not shown - secures filler block to vaporizer)
	029003		Fomblin RT15 (use on items 23, and 30)
	*15210	1	Label set (English)
	409093	1	Drain key
	54909	1	Drain funnel adaptor and drain key
	54913	1	Service kit (*Parts marked * are included in the service kit For full list, see page B7.)

APPENDIX

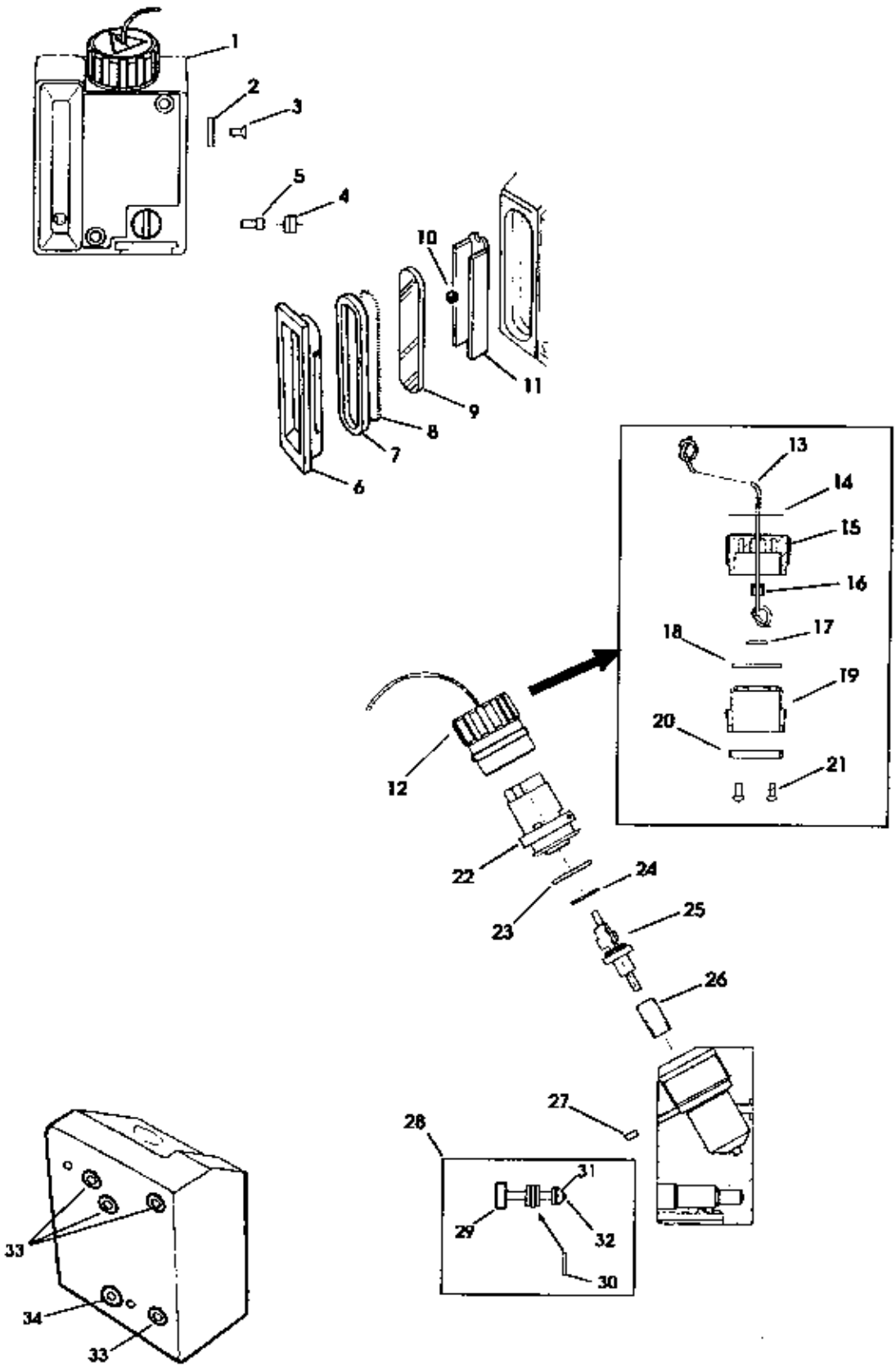
1
2
3
5
4
10
11
9
8
7
6
13
14
15
16
17
18
19
20
21
12
22
24
23
25
26
27
28
31
29
32
30
33
34
33

APPENDIX

Torque Tightening Figures

Agent specific filler block

Shaft/cap assembly seal retaining screw	0.6 Nm
Shaft/cap assembly to filler block screws	0.6 Nm
Knob to shaft/cap assembly retaining screw	0.8 Nm
Side plate to filler block retaining screws	1.2 Nm

Screw cap filler block

Shaft housing	5.7 Nm

Connector blocks

Back Entry back plate screws	4 Nm
Interlock lever to valve block retaining screw	2.3 Nm

Vapour control/bypass mechanism

Cut-off mechanism spool retaining screws	1.2 Nm

TC assembly

TC unit	75 Nm
Wick clamp plate retaining screws	2.26 Nm

Coil and vapour chamber

Base to vapour chamber retaining screws	0.6 Nm
Valve block to vapour chamber retaining screws	0.3 Nm, then 8.0 Nm
CAUTION: Tighten in sequence shown in section 6.4.9.3	
Filler block to vapour chamber retaining screws	2.3 Nm

Vapour control/cam mechanism

Cam locking shaft retaining screws	1.2 Nm

Valve block and lid

Dial stop support plate retaining screws	2.26 Nm
Dial stop retaining screws	1.2 Nm
Needle housing grub screws	0.3 Nm
Needle housing retaining screws	0.6 Nm
Back plug retaining screws	1.2 Nm
Moulded cover retaining screws	2.3 Nm
Dial scale retaining screw	0.6 Nm
Knob bar retaining screws	2.3 Nm
Connector block retaining screws	2.3 Nm

Bypass resistance adjustment locknuts (see section 6.5)

Locknut 'A' (maximum bypass resistance)	4 Nm
Locknut 'C'	4 Nm