SMR® MAXI® Cabinet

DULONG MEDTECH INC.

OWNER'S MANUAL

S|M|R®

Deluxe, Mini, Standard, and Tall MAXI Cabinet

110-014-008 Rev B
ECO 203160

Date Effective: November 2020

When contacting Dulong Medtech for Customer Service, it will be helpful if you have your **Customer Identification Number** and your **Customer Order Number** available. Please take a moment to record these numbers (printed on invoice) in the spaces below.

Customer Identification Number: _____

Customer Order Number:_____

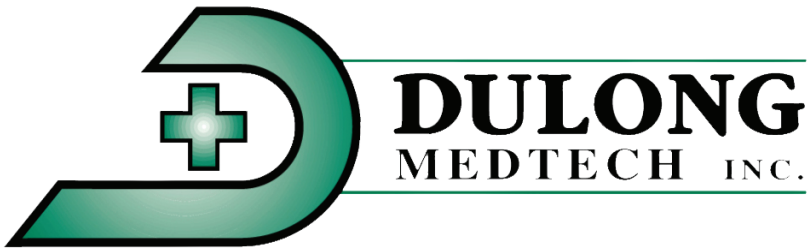

5605 ST-FRANCOIS
ST-LAURENT, QUEBEC, H4S 1W6
CANADA

COPYRIGHT NOTICE

© COPYRIGHT 2020, GLOBAL SURGICAL CORPORATION. NO PART OF THIS PUBLICATION MAY BE COPIED, PHOTOCOPIED, REPRODUCED, TRANSLATED, OR REDUCED TO ANY ELECTRONIC MEDIUM OR MACHINE-READABLE FORM, IN WHOLE OR IN PART, WITHOUT THE PRIOR WRITTEN CONSENT OF GLOBAL SURGICAL CORPORATION, 3610 TREE COURT INDUSTRIAL BLVD., ST. LOUIS, MO 63122

Congratulations on your purchase of the
SMR MAXI Cabinet.
We truly appreciate your business,
and we’re grateful for the trust you’ve placed in us.

TABLE OF CONTENTS

Section 1 Important Safety Instructions 1-1
1.1. Symbol Definitions 1-1
1.2. Warnings and Cautions 1-2

Section 2 Unpacking Instructions 2-1
2.1. Pump Connections 2-2
2.2. Setting Up the S WA77710 Wall Transformer 2-3
2.3. Setting Up the 123-000-072 HEINE NT300 Otoscope Charger 2-3

Section 3 Product Information 3-1
3.1. Description 3-1
3.2. System Parts 3-2
3.3. Specifications 3-3
3.4. Vacuum Pump and Canister System Specifications 3-4
3.5. Pressure Pump Specifications 3-4
3.6. S 7401355 Suction/Pressure Foot Switch (Optional) Specifications 3-4
3.7. Optional Equipment 3-5

Section 4 Operating Instructions 4-1
4.1. Operation and Controls 4-1
4.2. Control Panel - Main Power Switch 4-1
4.3. Control Panel - Vacuum/Pressure Switch 4-1
4.4. Illumination Controls/ Otoscope Heads 4-1
4.4.2. Rechargeable Instruments 4-2
4.5. Optional Light Source 4-4
4.5.1. Optional S 740200LED LED Light Source With Turret 4-4
4.5.1.1. Powering Up The LED Light Source 4-4
4.6. Optional S 740258A Drawer Warmer 4-5
4.6.1. Powering Up the Drawer Warmer 4-5
4.7. Optional S 740254KP Keyless Locking System 4-5
4.7.1. How to Operate the S 740254KP Keyless Locking System 4-5
4.8. Optional S 7401355 Suction / Pressure Foot Switch 4-6
4.9. Pump Controls 4-6
4.9.1. Vacuum Pump Controls 4-6
4.9.2. Pressure Pump Controls 4-6
4.9.3. Pressure Adjustment 4-7
4.10. Attaching Glassware or Suction Instruments 4-7
4.10.1. Atomizer Instruments 4-7
4.10.2. Suction Instruments 4-7

TABLE OF CONTENTS

Section 5 Care and Maintenance 5-1
5.1. Cleaning and Disinfecting 5-1
5.1.1. Preparation and Best Practice 5-1
5.1.2. Disposable Items 5-1
5.1.3. Glassware, Otoscopes, Mirror Warmer and Lightsource 5-2
5.1.4. Stainless Steel Surfaces 5-2
5.1.5. Aluminum Composite and Laminate Surfaces 5-2
5.1.6. Wilsonart® Work Surface 5-2
5.2. General Maintenance 5-3
5.3. Replacing the S 600001 Disposable Canister 5-4
5.4. Replacing the S 740600C Disposable Canister Liner 5-6
5.5. Replacing the S 850020 Hydrophobic Filter 5-7
5.6. Cleaning and Disinfecting the Optional S 740200LED LED Light Source With Turret 5-8
5.7. Replacing the fuse in the Optional S 740200LED LED Light Source 5-8
5.7. Replacing the Batteries in the S 740254KP Keyless Locking System 5-10
5.7.1. Care and Cleaning of the S 740254KP Keyless Locking System 5-10
5.8. 123-007-072 Otoscope Battery Replacement 5-10
5.9. S 740275 USB Auxiliary Outlet 5-11
5.10. Servicing The S 740258A Drawer Warmer 5-11

Section 6 Troubleshooting 6-1
6.1. Troubleshooting Low Suction 6-1
6.2. Troubleshooting the S 7401355 Suction/Pressure Foot Switch 6-2
6.3. Troubleshooting Guide 6-3

Section 7 Technical Information 7-1
7.1. Cabinet Pump Compartment Components 7-1
7.2. Cabinet Schematic 7-2

Section 9 Technical Data 9-1
Appendix A-1 Cabinet Model/Type 9-2
Appendix A-2 List of Accessories 9-3
Appendix A-3 Test Standards 9-6

WARNING

THE SAFETY AND SATISFACTION OF OUR CUSTOMERS AND THEIR PATIENTS ARE THE HIGHEST PRIORITIES OF DULONG MEDTECH. THIS MANUAL CONTAINS IMPORTANT INFORMATION REGARDING THE SAFE AND PROPER USE OF THIS EQUIPMENT AND SHOULD BE READ THOROUGHLY BY ALL OPERATORS PRIOR TO THEIR FIRST USE OF THE EQUIPMENT. FAILURE TO READ AND UNDERSTAND THIS MATERIAL COULD RESULT IN INJURY TO PATIENTS OR PERSONNEL OR IN DAMAGE TO THE EQUIPMENT.

1.1. Symbol Definitions

This symbol on the product is an attention symbol, alerting the user to read the Owner's Manual for important installation, operating instructions or safety information.

This symbol on the product indicates a potential electrical shock hazard and alerts the user to read the Owner's Manual for important safety information.

Symbol indicating "not for general waste." Recycle per the EUROPEAN WASTE ELECTRICAL AND ELECTRONIC EQUIPMENT (WEEE) DIRECTIVE.

This symbol indicates protective earth ground.

Rx only — For Professional Use Only.

This symbol means On (power).

This symbol means Off (power).

This symbol indicates a surface that could be hot to the touch.

This symbol alerts the user that this product emits bright light.

This symbol indicates an explosion hazard.

Symbol indicating do not expose to wetness or high moisture conditions.

This symbol indicates Biological hazard.

Symbol indicating Single Use Only. Do not attempt to clean, sterilize or reuse.

Symbol indicating Use By Date.

This symbol indicates keep dry.

Symbol indicating an accessible location on or within the cabinet where there is risk that a body part may become trapped.

This symbol indicated Do Not Push.

WARNING	This symbol indicates a situation in which incorrect handling through disregard of a warning might result in death or serious personal injury.
CAUTION	This symbol indicates a situation in which incorrect handling through disregard of a caution might result in personal injury or may result in damage to property.
NOTICE	This symbol indicates a message to avoid property damage or additional information to help complete a procedure.

1.2. Warnings and Cautions

WARNING	**ELECTRICAL SHOCK HAZARD! DISCONNECT ALL ELECTRICAL POWER PRIOR TO SERVICING CABINET. CONNECT THE MAXI TREATMENT CABINET ONLY TO A PROPERLY-WIRED GROUNDED RECEPTACLE.**
WARNING	**EXPLOSION HAZARD! DO NOT USE THE MAXI TREATMENT CABINET IN THE PRESENCE OF FLAMMABLE ANESTHETICS OR OTHER FLAMMABLE SUBSTANCES IN COMBINATION WITH AIR, OXYGEN-ENRICHED ENVIRONMENTS OR NITROUS OXIDE.**
WARNING	**LIQUIDS CAN DAMAGE THE ELECTRONICS INSIDE AND OUTSIDE OF THE CABINET AND CAUSE AN ELECTRICAL SHOCK HAZARD. PREVENT LIQUIDS FROM SPILLING ON OR DRIPPING INTO THE CABINET.**
WARNING	**TO AVOID RISK OF ELECTRICAL SHOCK, THIS EQUIPMENT MUST ONLY BE CONNECTED TO A SUPPLY MAINS WITH PROTECTIVE EARTH GROUND.**
WARNING	**NO MODIFICATIONS TO THE EQUIPMENT ARE ALLOWED WITHOUT AUTHORIZATION OF THE MANUFACTURER.**
WARNING	**IF THIS EQUIPMENT IS MODIFIED, APPROPRIATE INSPECTION AND TESTING MUST BE CONDUCTED TO ENSURE CONTINUED SAFE USE OF THE EQUIPMENT.**
WARNING	**THE CABINET SHALL NOT BE SERVICED OR MAINTAINED WHILE IN USE WITH A PATIENT.**
WARNING	**IT IS HIGHLY RECOMMENDED THAT THE INSTALLATION OF THIS EQUIPMENT BE PERFORMED BY QUALIFIED TECHNICIANS. INSTALLATION BY UNQUALIFIED INDIVIDUALS COULD RESULT IN PERSONAL INJURY.**
WARNING	**TO MINIMIZE THE RISKS DUE TO PINCH POINTS, KEEP ALL OBJECTS AND BODY PARTS OUT FROM UNDER THE CABINET WHEN TRANSPORTING.**
WARNING	**DO NOT PLUG ANY UNAUTHORIZED COMPONENTS INTO OUTLET STRIP IN CABINET, AS DOING SO WOULD REQUIRE RE-EVALUTION OF CABINET TO RELEVANT STANDARDS.**
WARNING	**USE OF THIS EQUIPMENT ADJACENT TO OR STACKED WITH OTHER EQUIPMENT SHOULD BE AVOIDED BECAUSE IT COULD RESULT IN IMPROPER OPERATION. IF SUCH USE IS NECESSARY, THIS EQUIPMENT AND THE OTHER EQUIPMENT SHOULD BE OBSERVED TO VERIFY THAT THEY ARE OPERATING NORMALLY.**
WARNING	**USE OF ACCESSORIES AND CABLES OTHER THAN THOSE SPECIFIED OR PROVIDED BY THE MANUFACTURER OF THIS EQUIPMENT COULD RESULT IN IMPROPER OPERATION. IF SUCH USE IS NECESSARY, THIS EQUIPMENT AND THE OTHER EQUIPMENT SHOULD BE OBSERVED TO VERIFY THAT THEY ARE OPERATING NORMALLY.**

WARNING	THIS SYSTEM IS INTENDED FOR USE BY HEALTHCARE PROFESSIONALS ONLY.
WARNING	THIS SYSTEM MAY CAUSE RADIO INTERFERENCE OR MAY DISRUPT THE OPERATION OF NEARBY EQUIPMENT. IT MAY BE NECESSARY TO TAKE MITIGATION MEASURES, SUCH AS RE-ORIENTING OR RELOCATING SMR CABINET OR SHIELDING THE LOCATION.
WARNING	TOO HIGH OF PRESSURE COULD RESULT IN HAZARDOUS OUTPUT FOR DISPENSING MEDICATIONS.
CAUTION	A Hydrophobic Filter is installed in the vacuum line. Failure to replace this filter regularly (at least once a month) will lead to reduced flow. Extended use of alcohol or solvents may reduce the efficiency of the microporous membrane of the hydrophobic filter. If these chemicals are used frequently, the filter should be inspected and replaced more often than the recommended time.
CAUTION	Non-use of the hydrophobic filter may lead to possible contamination and pump failure. Global Surgical will not receive or replace any pump in which the Hydrophobic Filter was not used.
CAUTION	Canister is Single Use Only. Do Not attempt to clean, sterilize or reuse canister. Possible consequences of reuse include: 1.) implosion, 2) fluid bypass, and 3) exposure to blood borne pathogens.
CAUTION	Canister is Single Use Only, Do Not attempt to clean, sterilize or reuse canister. Possible consequences of reuse include: 1.) Implosion, 2) Fluid bypass, and 3) Exposure to blood borne pathogens.
CAUTION	Care should be used by all personnel coming into contact with suction equipment. Wear gloves when handling suction equipment. Hand washing is necessary to prevent the possibility of cross-contamination.
CAUTION	Dispose of the disposable suction canister containing medical waste in an environmentally safe manner per state and federal regulations.
CAUTION	After moving cabinet to its permanent location, lock the four casters to keep it from moving.
CAUTION	DO NOT block the Light Source ventilation slot on the back side of the MAXI Treatment Cabinet during operation.
CAUTION	Drawers must be closed before transporting any MAXI Treatment Cabinets.
CAUTION	The internal power receptacles located inside the cabinet are not for general use.
CAUTION	Failure to cut and remove the shipping tape from around the two pumps will result in damage to the pumps.
CAUTION	To reduce the risk of electric shock do not open pump compartment while master power switch is turned on. Refer servicing to qualified service personnel
CAUTION	To prevent tipping, push the cabinet from the side not the front or back. Only open one drawer at a time.
CAUTION	Before moving cabinet to a different location, remove all loose equipment from the counter top.

⚠ CAUTION Maximum weight for contents of cabinet drawers is 4 lbs per drawer.

⚠ CAUTION Safe Working Load: 2 KG (4 lbs.) each drawer or shelf or counter surface.
Duty Cycle: 10 min. maximum On Vacuum/Pressure, 10 min. Off.

⚠ CAUTION Replacement parts, such as cables, must be purchased through Global Surgical to ensure proper compliance requirements. Unauthorized use of these items will void warranty and may cause injury to you, others and/or the equipment.

⚠ CAUTION When used in clinical or residential areas near radio or TV units, this equipment may be subject to radio interference. To avoid adverse electromagnetic effects, do not operate this equipment near RF energy equipment.

⚠ CAUTION To prevent any potential electromagnetic interference, do not use any kind of cellular phone near the equipment.

WARNING **FAILURE TO FOLLOW THESE INSTRUCTIONS WILL RESULT IN DAMAGE TO THIS SYSTEM OR POSSIBLE INJURY.**

WARNING **THE BANDS WILL SPRING APART WHEN CUT ON THE SHIPPING BOX. ENSURE THEY WILL NOT HIT ANYONE OR ANYTHING. EYE PROTECTION SHOULD BE WORN WHEN REMOVING THE BANDS. WATCH FOR SHARP EDGES.**

CAUTION **Contents are fragile and should be removed carefully.**

CAUTION **Some of the parts may be damaged by knives. Open boxes carefully.**

NOTICE Check for damage before discarding the shipping material and notify Dulong Medtech if shipping damage is observed.

NOTICE Contents are packed in several boxes. Before discarding any packaging, ensure no components are still within.

NOTICE Save this manual for future reference.

NOTICE If you have ordered accessories, then some of these may be assembled to the unit while others are supplied unassembled. Please examine the contents of the box thoroughly. If any accessories require assembly, then instructions will be included.

All shipping materials should be retained until it has been determined that the unit was not damaged during shipment.

If damage is discovered, complete the following:

1. Do not refuse shipment.
2. Make a notation on the delivery receipt and inspect the carton for damage.
3. Take pictures of damage to the equipment and to the packaging (if evident).
4. If damage is discovered, leave in original container and request immediate inspection from the carrier within 3 days.
5. Contact Dulong Medtech Customer Service at 877-695-7687 or info@dulongmedtech.com

If the product is damaged electrically or mechanically and the original packing materials are no longer available, contact Dulong Medtech Customer Service.

Refer to Section 8 of this manual regarding contact information and proceed as instructed.

For further instructions see “ SMR MAXI Cabinet Unpacking Instructions, document 108-014-011.

2.1. Pump Connections

WARNING **ELECTRICAL SHOCK HAZARD! CONNECT THE SMR MAXI CABINET ONLY TO A PROPERLY-WIRED GROUNDED RECEPTACLE.**

CAUTION **The pumps in the cabinet have been secured for shipment by tape. Before operating them remove the tape. Failure to cut and remove the shipping tape from around the two pumps will result in damage to the pumps.**

CAUTION **The internal power receptacles located inside the cabinet are not for general use.**

CAUTION **Do not place cabinet in location where access to wall plug is blocked.**

1. Unlock and open the door of the pump compartment.

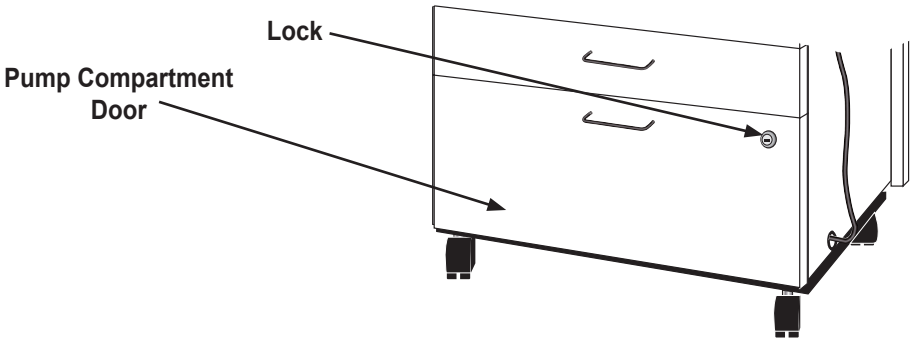

2. Cut the tape on each side of the pump as near to the wooden base board as possible.
3. Peel the tape away from the pump housing.
4. Remove the spacer board located between the pump and wooden base board.

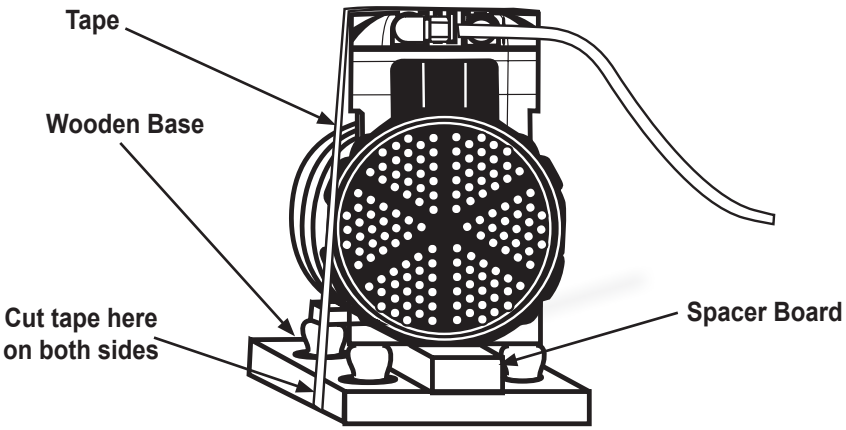

5. Connect the power cord to a properly grounded receptacle.
6. Turn on the Pressure Pump and set the air pressure. **See Section 4.8.3**
7. Turn off the Pressure Pump.
8. Turn on the Vacuum Pump and check that there is vacuum at the external vacuum hose.
9. Turn off the Vacuum Pump.
10. Close and lock the pump compartment door.

2.2. Setting Up the S WA77710 Wall Transformer

If the cabinet has a S WA77710 Wall Transformer, the wall transformer and two corded illumination handles are attached to the side of the cabinet and are ready for use. Attach the instrument heads of your choice to the handles. Lift one handle from the cradle. The instrument powers on. Only one instrument can be powered on at a time. See the manufacturer's Wall Transformer Instructions for Use, part number ***723553, 80020201*** for further information.

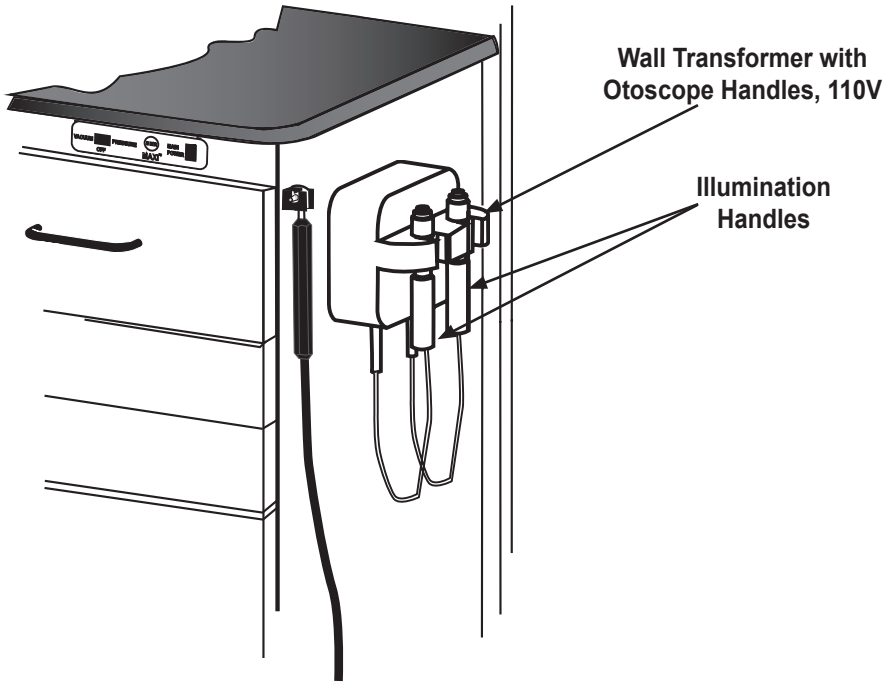

2.3. Setting Up the 123-000-072 HEINE NT300 Otoscope Charger

CAUTION When replacing the handles in the charging compartments, ensure that the internal contacts compartment are clean and that the instruments are switched off. Instruments placed next to each other must not touch each other.

If the cabinet has a 123-007-072 Rechargeable Otoscope the cabinet does not need any additional connections made. Unpack the rechargeable handles and verify proper operation before placing them into their respective recharging wells. See the Heine manufactures Instructions for Use, ***med 0613*** for further information.

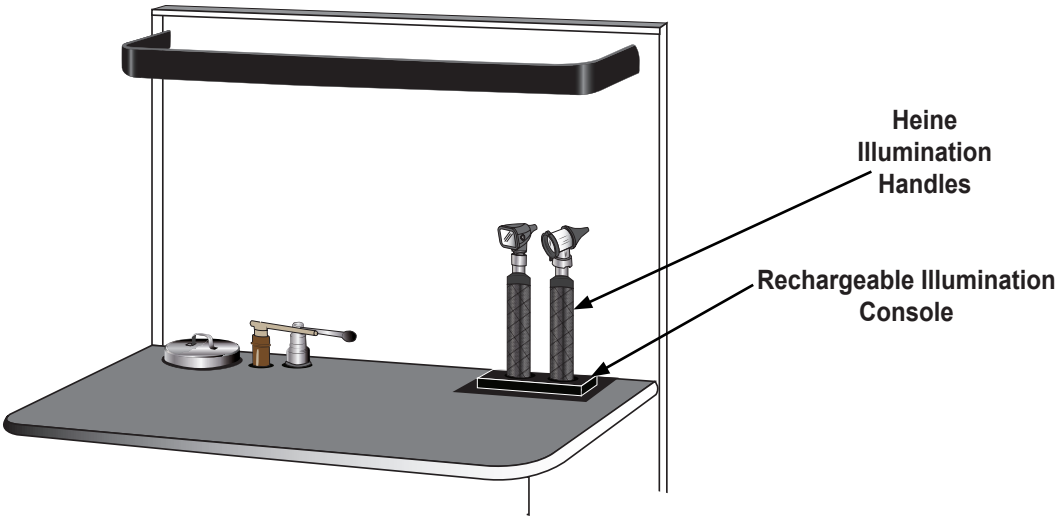

3.1. Description

The SMR MAXI Cabinets serve as integrated treatment centers to keep instruments and equipment within easy reach of the physician. The cabinets are available in stainless steel, laminated finish, or aluminum composite in Standard, Standard-Tall, Deluxe, Deluxe-Tall, and Mini models. Cabinets may be powered or without power (used for storage only). Powered cabinets may contain pressure and vacuum pumps and may be controlled from the Control Panel or from the Optional Foot Switch. The vacuum line on the powered instrument cabinets includes a hydrophobic filter and disposable canister connected in line with the vacuum pump to collect waste. The Pressure Pump has a regulated air pressure supply and an assortment of glassware attachments. See your Sales Representative for the available glassware options. Three illumination options are available: corded or rechargeable handles for the otoscope and transilluminator heads, or optional high output sources to supply light to devices with fiber optic cables.

This manual is primarily directed towards powered cabinets, but general information concerning cleaning applies to all cabinets. Data is included for servicing the components of powered cabinets. Servicing and repair should be done by qualified service personnel.

Intended Use
The SMR MAXI Cabinet provides a single-source storage unit for the storage, light, vacuum and pressure lines, and power for otolaryngology equipment.

Contraindication:
The light source is not intended to be used as a curing light. The frequently used function is adjusting the brightness intensity.

Environment for Use:
The SMR MAXI Cabinet is intended for use by healthcare professionals only. The emissions characteristics of this equipment make it suitable for use in industrial areas and hospitals (CISPR 11 class A). If it is used in a residential environment (for which CISPR 11 class B is normally required), this equipment might not offer adequate protection for radio-frequency communication services. The user might need to take mitigation measures, such as relocating or re-orienting the equipment.

Hospital (CISPR 11 class A) use except near active HF Surgical Equipment or where Magnetic Imaging Equipment may have high EM disturbances.

TO MINIMIZE THE RISKS DUE TO PINCH POINTS, KEEP ALL OBJECTS AND BODY PARTS OUT FROM UNDER THE CABINET WHEN TRANSPORTING.

TO PREVENT TIPPING ONLY PUSH CABINET FROM THE SIDE, DO NOT PUSH FROM THE FRONT OR BACK.

Pinch Points:

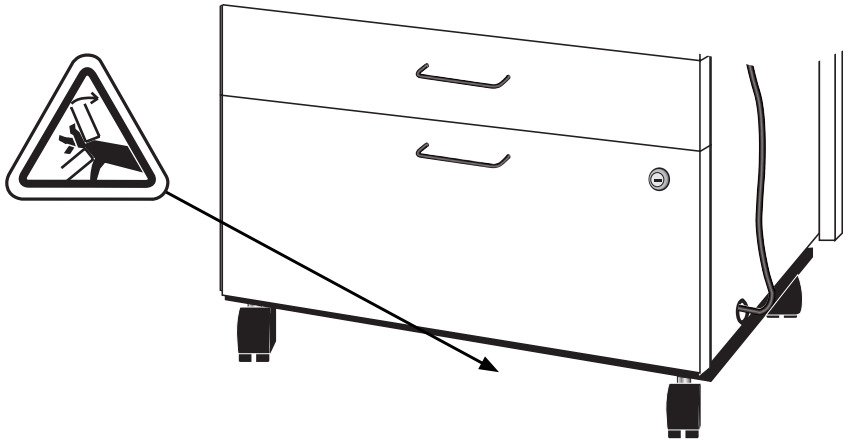

3.2. System Parts

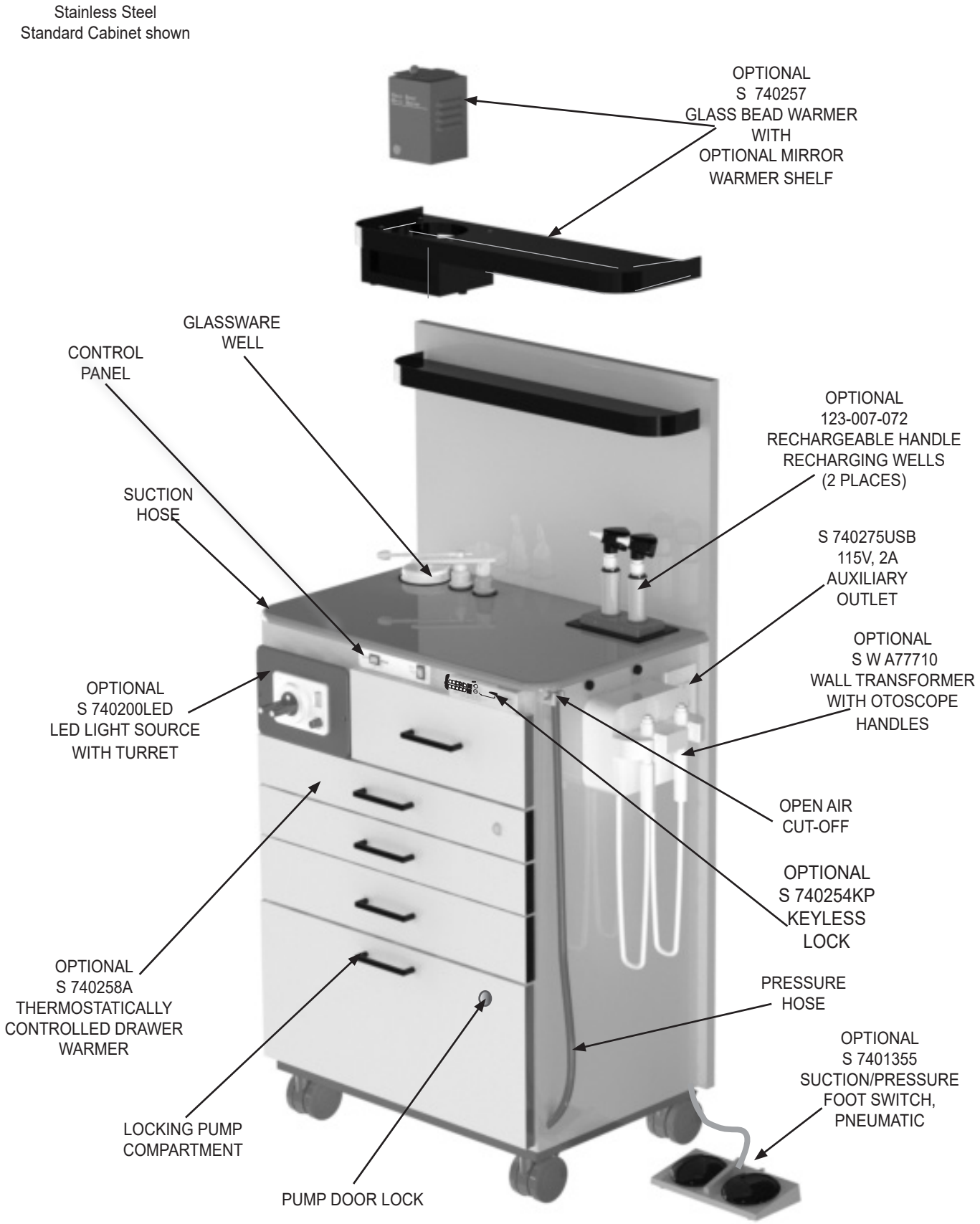

Figure 3-1. System Parts List

3.3. Specifications

Table 3-1 Specifications

ALL DIMENSIONS ARE IN INCHES.	STAINLESS STEEL				LAMINATE	ALUMINUM COMPOSITE			
	STANDARD	STANDARD TALL	DELUXE	DELUXE TALL	MINI	STANDARD	STANDARD TALL	DELUXE	DELUXE TALL
OVERALL HEIGHT HIGH BACK, W/CASTERS (LOW BACK)	49 (N/A)	60.5 (N/A)	49 (N/A)	60.5 (N/A)	49 (N/A)	49.5 (39.25)	60.5 (50.25)	49.5 (39.25)	60.5 (50.25)
COUNTER TOP HEIGHT W/CASTERS	33.5	44.75	33..5	44.75	33.5	33.5	44.75	33..5	44.75
WIDTH	24.75	24.75	34.5	34.5	24.75	29	29	38.25	38.25
	CORDED OTOSCOPE ADDS 3.25					CORDED OTOSCOPE ADDS 2.25			
DEPTH	17.25	17.25	17.25	17.25	17.25	19	19	19	19
	GLOVE OR TISSUE DISPENSER ADDS 3 INCHES								
QTY DRAWER: 3.5 H X 9.25 W X 10 D	2	2	2	2	2	2	2	2	2
	* CHANGES TO 1 DRAWER 3.5" x 12.25 W x 10D WHEN LED LIGHT SOURCE IS SELECTED								
QTY DRAWER: 2 H X 20.25 W X 13.25 D	2	4	2	4	2	2	4	2	4
QTY DRAWER: 3.5 H X 20.25 W X 13.25 D	1	2	1	2	1	1	2	1	2
TRASH PORT	N/A	N/A	OPTIONAL	OPTIONAL	N/A	N/A	N/A	OPTIONAL	OPTIONAL
DIRTY INSTRUMENT TRAY	0	0	1	1	0	0	0	1	1
GLASSWARE / COTTON JAR INCLUDED:	S A163 A S286 S A3312	S A163 A S286 S A3312	S A163 A S286 S A177 S A3312	S A163 A S286 S A177 S A3312	NONE	S A163 A S286 S A3312	S A163 A S286 S A3312	S A163 A S286 S A177 S A3312	S A163 A S286 S A177 S A3312
MAXIMUM VACUUM	4.4 CFM (125 L/MIN) @ OPEN FLOW; 25 IN Hg (635 mm Hg)								
MAXIMUM PRESSURE	FACTORY SETTING 20 PSI, PUMP CAPABLE OF 60 PSI								
ELECTRICAL	110-120VAC, 60 HZ, 13 AMPS								
SHIPPING WEIGHT	200 LBS	250 LBS	250 LBS	300 LBS	200 LBS	250 LBS	300 LBS	300 LBS	350 LBS
	MAY VARY BY OPTIONAL COMPONENTS SELECTED								

STORAGE, OPERATING & CERTIFICATION INFORMATION

CONDITION	OPERATING ENVIRONMENT	STORAGE ENVIRONMENT	WATER RESISTANCE
TEMPERATURE:	15°C TO 40°C (59°F TO 104°F)	-20°C TO 50°C (-4°F TO 120°F)	NOT PROTECTED EQUIPMENT IP01
RELATIVE HUMDITY:	15% RH TO 75% RH	30% RH TO 95% RH	
AIR PRESSURE:	70-106 kPa	70-106 kPa	
CERTIFICATIONS:	IEC 60601-1: 2014 ED 3.1 UL STD 60601-1 MEDICAL EQUIP	IEC 60601-1-2: 2014 ED 4 SEE APPENDIX A-3 FOR ADDITIONAL LISTINGS	

TYPE B EQUIPMENT
CLASS 1 EQUIPMENT

TYPE B APPLIED PARTS:
SUCTION TUBING, PRESSURE TUBING AND CORDLESS OTOSCOPES

TYPE BF APPLIED PARTS:
CORDED OTOSCOPE AND LED LIGHT SOURCE

3.4. Vacuum Pump and Canister System Specifications

The Vacuum Pump is a 110-120V, 3.2/1.7 A, 60 Hz, thermally protected, piston-type pump. The pump will draw down to a maximum of 25 inches (635 mm) of mercury. Unrestricted air flow is 4.4 cubic feet (125 liters) per minute. A disposable canister with overfill protection collects contaminates. There is a hydrophobic filter in the vacuum line to protect the pump.

High Vacuum/High Flow: 125L/min.@ 0 in Hg, 10L/min. @ 25 in Hg.

⚠ CAUTION Equipment intended to be used on flat plane. Using on inclined plane may reduce capacity of collection canister.

3.5. Pressure Pump Specifications

The pressure pump is a 115 4.2A, 60 Hz, thermally protected, piston-type compressor. The maximum continuous or intermittent pressure developed by the pump is 100 psig, however the regulator will only permit control of this pressure between 0 and 60 psig. The pump ships from the factory set to 20 psig (1.4 bar). Normally, the regulator should be adjusted for approximately 10 psig (0.7 bar) (see paragraph 4.8.3) A dampener stores a small charge of air pressure so that a steady air flow is maintained consistently at the output nozzle.

3.6. S 7401355 Suction/Pressure Foot Switch (Optional) Specifications

The Foot Switch has black PVC twin bellows and a strong, low-profile standard grey ABS base. The base has non-skid feet and is weighted to reduce movement. The Foot Switch is pneumatically operated and electrically isolated. The Foot Switch provides convenient ON/OFF control of the suction and/or air pump and provides hands-free operation.

3.7. Optional Equipment

S 740257 Glass Bead Mirror Warmer

CAUTION Placing instruments in Hot Bead Mirror Warmer for longer than recommended by the manufacturer may cause burns.

CAUTION The Hot Bead Mirror Warmer is hot. Do not place hands or fingers inside the Hot Bead Mirror Warmer.

CAUTION Place only clean, sterilized mirrors in the mirror warmer.

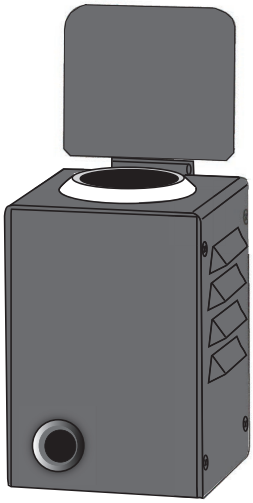

The S 740257 Glass Bead Mirror Warmer warms mirrors to prevent fogging by placing the mirror into the hot beads for three to five seconds. The Glass Bead Mirror Warmer uses S 1006102 Replacement glass beads which are avaliable from Dulong Medtech.

See Premier Medical Products, product information sheet ***051077 Rev3 PMM*** enclosed with unit for complete details.

SEE SMALL PARTS CATALOG (***GSC 5613)***
FOR ADDITIONAL OPTIONAL EQUIPMENT.

.

4.1. Operation and Controls

4.2. Control Panel - Main Power Switch

To turn on power to the cabinet, push the rocker switch to the “I” position. The switch will light up when there is power to the cabinet. Push the switch to the “O” position to turn the power off. See **Figure 4.1.** for the location of the Control Panel.

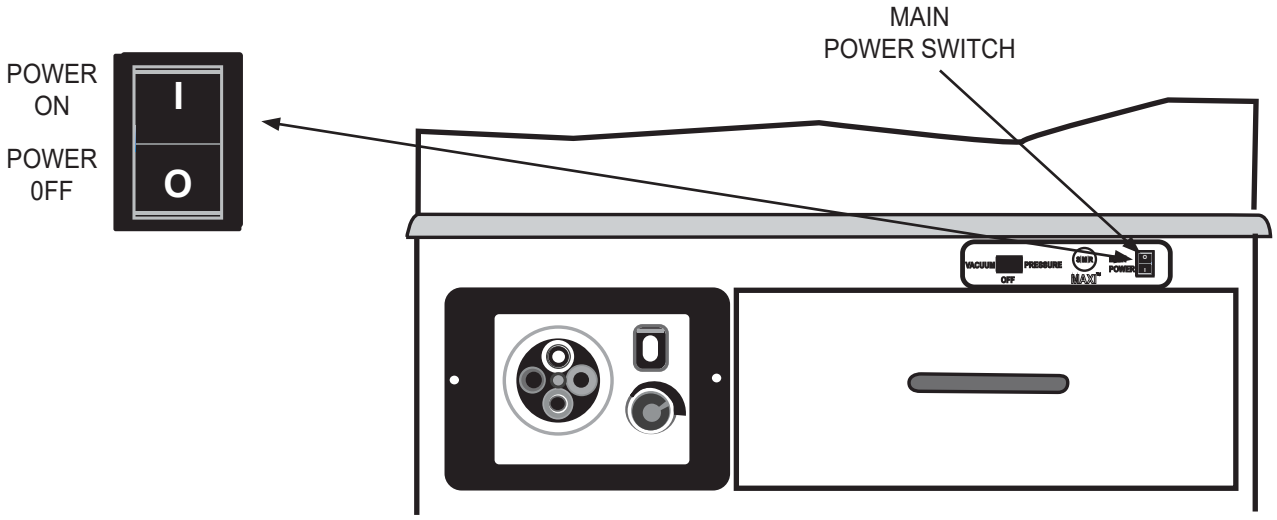

Figure 4-1. Control Panel Main Power Switch Location

4.3. Control Panel - Vacuum/Pressure Switch

Figure 4-2 below shows the control panel for powered cabinets. The control panel consists of a single 3-position style rocker switch. Pressing the switch to the right activates the pressure pump. Pressing the switch to the left activates the vacuum pump. The center position is off.

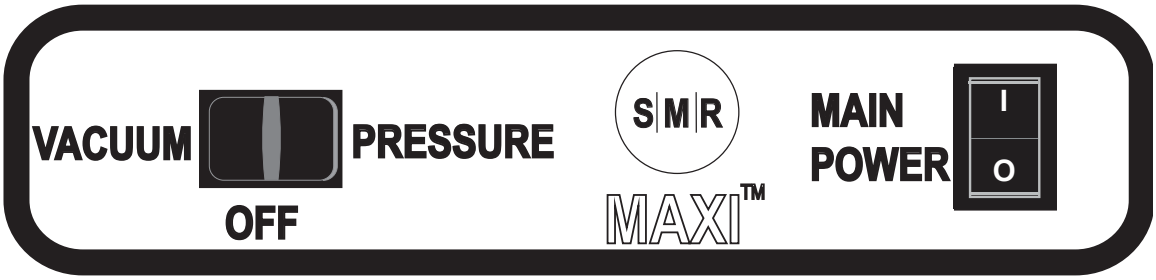

Figure 4-2. Control Panel Vacuum/Pressure Switch

4.4. Illumination Controls/ Otoscope Heads

Otoscope and Transilluminator heads are attached to all handles the same way by pushing on to the handle and twisting to lock. The power controls for the corded and rechargeable instruments are described in the following paragraphs.

4.4.1. Corded Instruments

S WA77710 Wall Transformer w/ Otoscope Handles

NOTICE Decreasing the light output to minimum level does not power down the instrument. Returning the handle to cradle will power the instrument down.

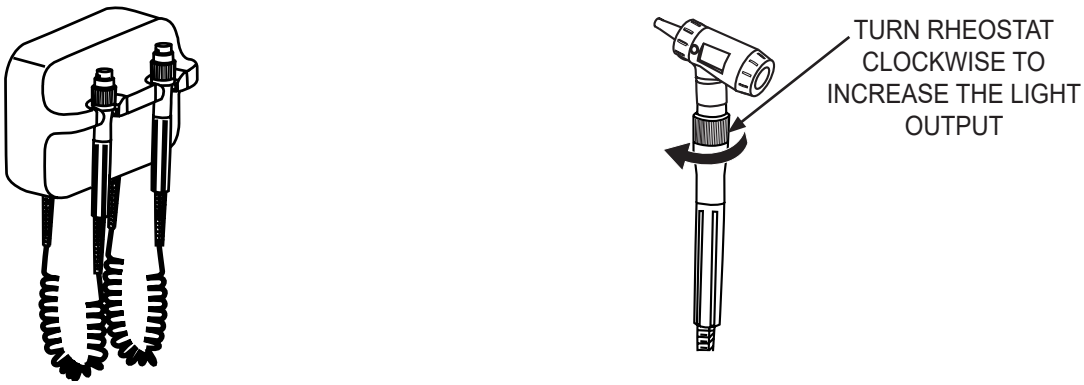

Figure 4-3. S WA77710 Wall Transformer w/ Otoscope Handles

Sensor switches in the cradle operate so that power is applied to a corded handle ONLY when it is lifted out of its holder. The sensor switches for the two illuminators are wired so that only one instrument may be used at a time and the other instrument must be in its proper hanger. The lamp intensity is controlled by turning the rheostat clockwise to increase the light output. Turning the rheostat counterclockwise decreases the light output.

See the manufacturer's wall transformer manual part number ***773553, 80020201*** for warnings, product instructions, cleaning instructions and any further information.

4.4.2. Rechargeable Instruments

123-007-072 HEINE NT300 OTOSCOPE CHARGER

WARNING **DO NOT INSERT FINGERS INTO RECHARGER PORTS.**

NOTICE The rechargeable handle should always be replaced and stored in the charger. Circuitry in the charger will prevent the batteries from being over-charged.

NOTICE When charging the handles, ensure that the internal contacts in the charging compartments are clean and that the instruments are switched off by turning the handle to the "0" position.

The pulsating light around the charging compartment shows that current is flowing and that the battery is being recharged. When the light is permanently lit, the charging sequence is complete. The battery in the handle is fully-charged and is ready to supply maximum power.

See the manufacturer's manual ***med 0613*** for warnings, maintenance, electromagnetic compatibility and other information.

See Appendix A-2 " Accessories" for list of Otoscope Batteries, and Handles.

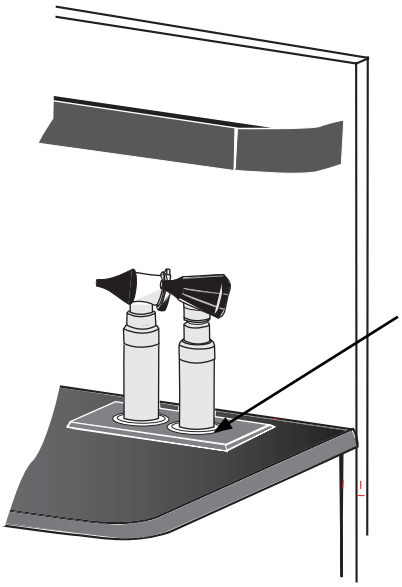

The **Pulsating Light** shows that current is flowing and that the battery is being recharged.

When the **Light is permanently lit,** the charging sequence is completed. The battery in the handle is fully-charged.

If **Light is off,** this indicates that the compartment is empty.

Figure 4-4. 123-007-072 HEINE NT300 Otoscope Charger

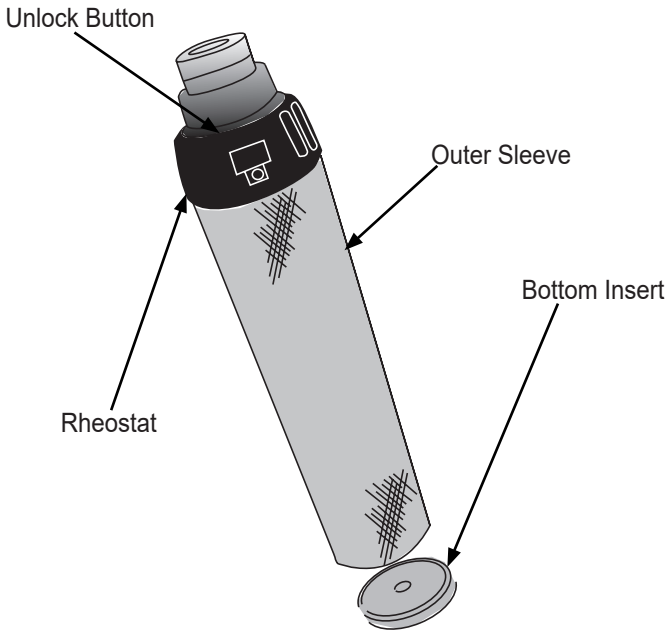

Figure 4-5. 123-007-072 HEINE NT300 Otoscope Instrument Switch Locations

4.5. Optional Light Source

4.5.1. Optional S 740200LED LED Light Source With Turret

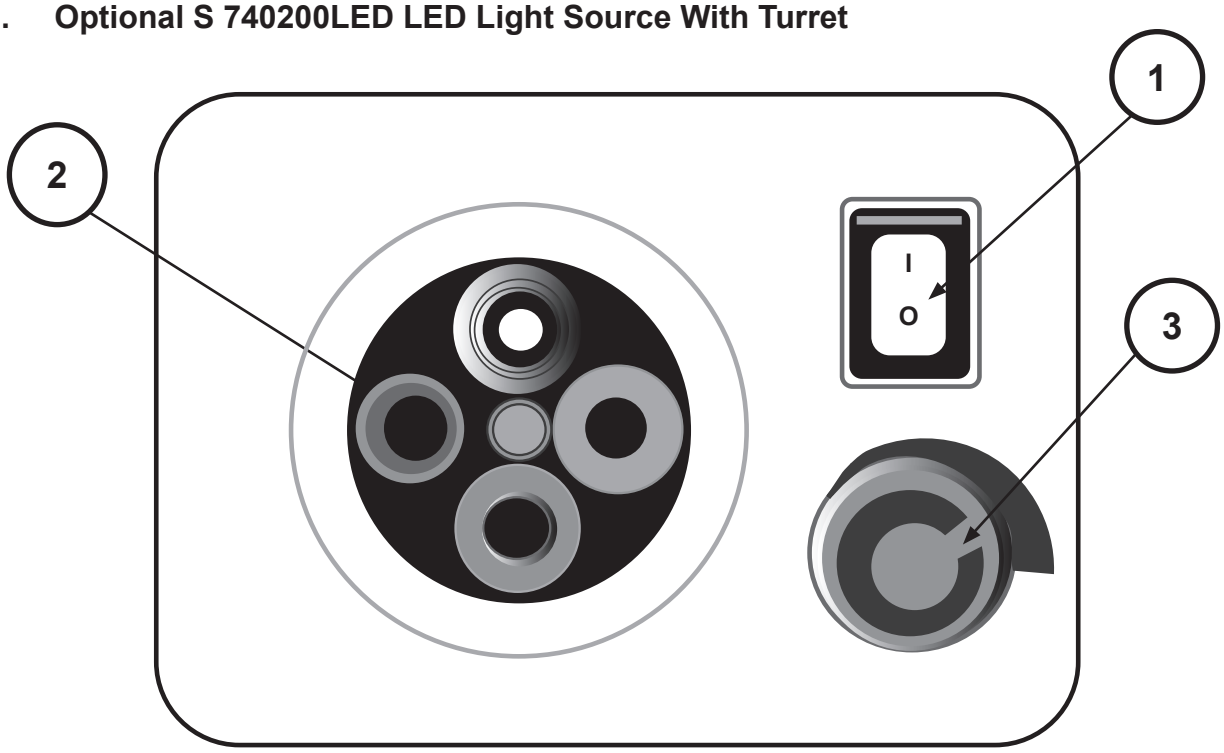

Figure 4-6 LED Light Source Front Panel

No.	Name	Function
1	Power switch	Turns the light source on and off. Fan will operate
2	Light guide adapter	Turret type to fit your choice of four: Storz, ACMI, Wolf, Olympus
3	Intensity control knob	Electronically controls the light output.

4.5.1.1. Powering Up The LED Light Source

To Operate the LED Light source:

CAUTION **Connect an endoscope to the light guide adapter prior to turning on the light source, or eye damage may occur.**

CAUTION **Turret gets hot to touch when the light source is turned on. Take care installing and removing endoscopic equipment.**

1. Turn on the power switch. The indicator on the power switch will light.

4.5.1.2. Light Brightness Adjustment

1. The intensity control enables the user to obtain a brighter or darker illumination of the object of observation.
2. Adjust the light intensity by turning the intensity control knob clockwise for a brighter illumination and counter-clockwise for a darker illumination.

See the manufacturer's operator's manual ***LIT168*** for warnings, cleaning, fuse replacement and any other additional information.

4.6. Optional S 740258A Drawer Warmer

4.6.1. Powering Up the Drawer Warmer

WARNING Do not try to repair the drawer warmer. Contact Dulong Medtech at (514) 337-7155 for service information.

CAUTION Do not remove instrument tray from drawer warmer during use.

NOTICE The drawer warmer has an automatic time out after 9 hours and will shut off. To re-start simply press the drawer warmer power button again.

To Operate the Drawer Warmer

1. Turn on the power switch by pressing the push button switch. The LED ring on the switch will light up indicating that the warming operation has turned on. The drawer will heat to 98.06°F 37°C ±2°. Push the button switch again and the lighted ring on the power button switch will go out indicating that the warming operation has shut off.

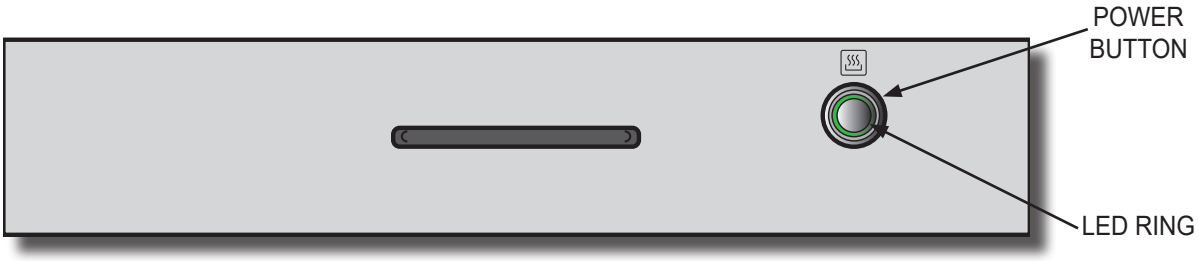

Figure 4-7 Drawer Warmer

4.7. Optional S 740254KP Keyless Locking System

4.7.1. How to Operate the S 740254KP Keyless Locking System

The S 740254KP Keyless Locking System is powered by 2 AAA batteries (installed).

1. To UNLOCK: Type the 4-digit user code, press ENTER, and rotate knob clockwise 180 degrees.
2. To LOCK: Rotate the knob counter-clockwise 180 degrees.

See Section 5.6 for instructions on how to replace the batteries.
See the manufacturer's user manual (***PN: 333153000000***) to set a new user code or for further instructions..

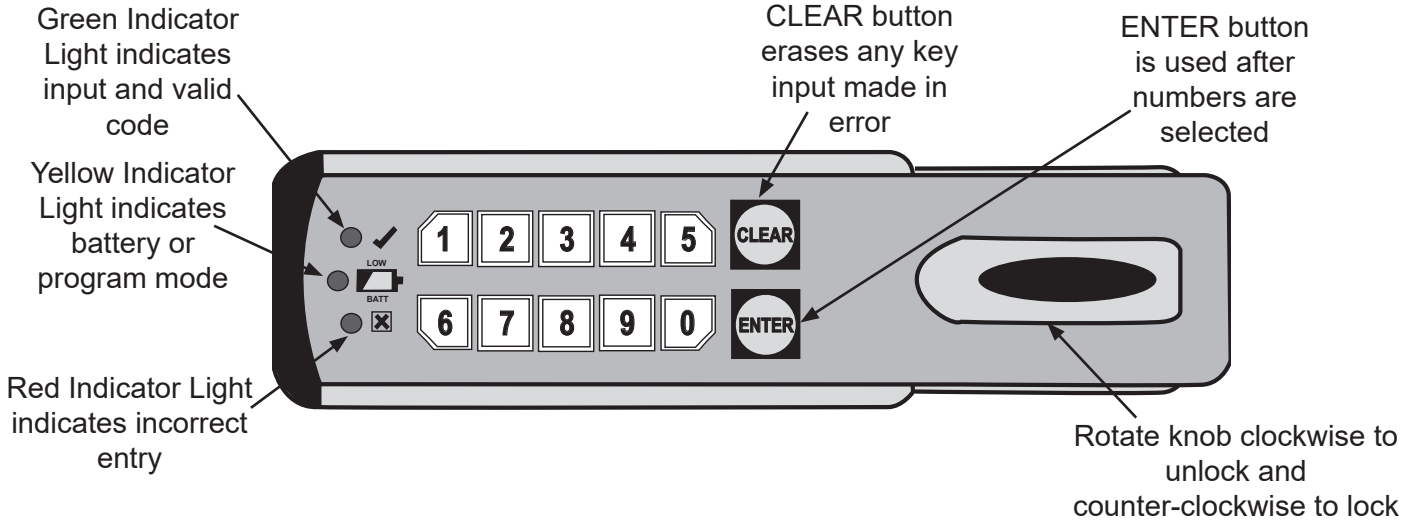

Figure 4-8. Keyless Locking System

4.8. Optional S 7401355 Suction / Pressure Foot Switch

NOTICE To use the foot switch, the switch on the control switch panel must be set to the **"OFF"** position.

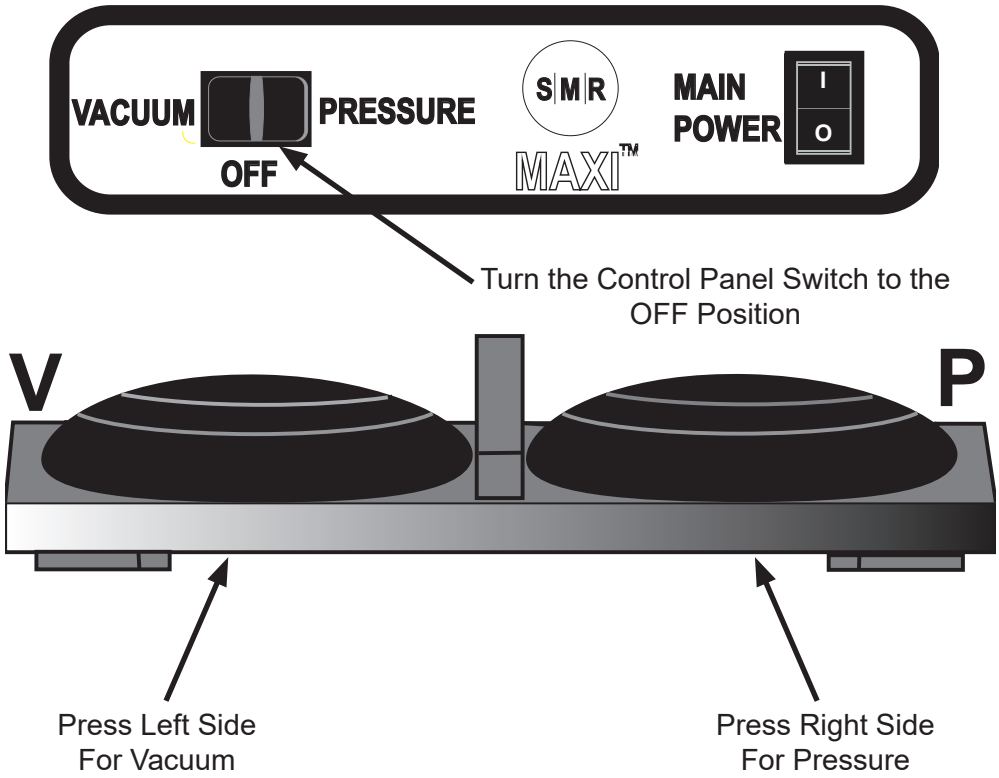

Figure 4-9. Optional S 7401355 Suction / Pressure Foot Switch Operation

4.9. Pump Controls

The control panel controls the pumps in the cabinet. This switch is located on the front panel just below the cabinet top. Refer to **Figure 4-2** in this section.

4.9.1. Vacuum Pump Controls

The vacuum pump is energized by either:
1. Selecting "VACUUM" on the control panel and pressing the rocker-style switch to the left. **See Figure 4-9.**
2. Pressing down on the left side of the (optional) pneumatic foot switch. **See Figure 4-9**

When the vacuum pump is energized, suction will be present in the vacuum hose. The vacuum hose is located on the left side of the cabinet (standard).

4.9.2. Pressure Pump Controls

The pressure pump is energized by either:
1. Selecting "PRESSURE" on the control panel and pressing the rocker-style switch to the right.
2. Pressing down on the right side of the (optional) foot switch. **See Figure 4-9**

4.9.3. Pressure Adjustment

WARNING **PRESSURE THAT IS TOO HIGH COULD RESULT IN HAZARDOUS OUTPUT FOR DISPENSING MEDICATIONS.**

NOTICE The pressure can only be set with the air restricted at the open-air cutoff tip.

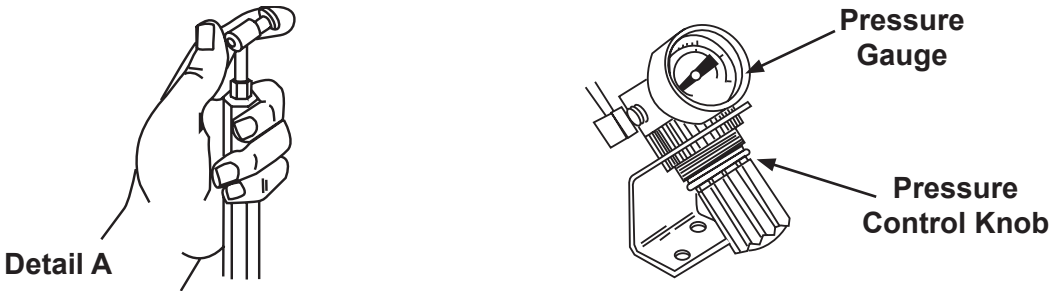

Figure 4-10. Pressure Adjustment

The air pressure is set at 20 psi when shipped from the factory. The air pressure system must be set to the pressure which suits the owner's application. This pressure is usually about 10 psi (0.7 bar). Once set, the pressure regulator should require no further attention. To adjust the pressure, proceed as follows:
See Figure 4-10.

1. Select "PRESSURE" on the control panel and unlock and open the bottom door of the cabinet.
2. Squeeze the open air cut-off tip between the thumb and forefinger to restrict the air flow. **See Figure 4-10**. Detail A.
3. Pull out and turn the pressure-control knob clockwise to increase pressure or counter-clockwise to decrease pressure.
4. Release the pressure exerted by your fingers, allow a moment for the pressure to stabilize. Note the air pressure on the pressure gauge. The pressure will be approximately 0 to 5 psi.
5. When the pressure has been adjusted to the desired level, push the pressure-control knob inward and turn off the pump.

4.10. Attaching Glassware or Suction Instruments

NOTICE **Consult manufacturer's glassware instructions for cleaning, sterilizing, and use of glassware.**

‘ ***NOTICE*** **It is the Customer's responsibility to label medication inside the glassware.**

4.10.1. Atomizer Instruments

Insert the instrument's connector over the open air cut-off and twist slightly while pushing to secure the connection. See Figure 4-11. Detail A

4.10.2. Suction Instruments

Suction Instruments are simply connected by pushing the end of the vacuum hose over the nipple of the instrument. See Figure 4-11. Detail B

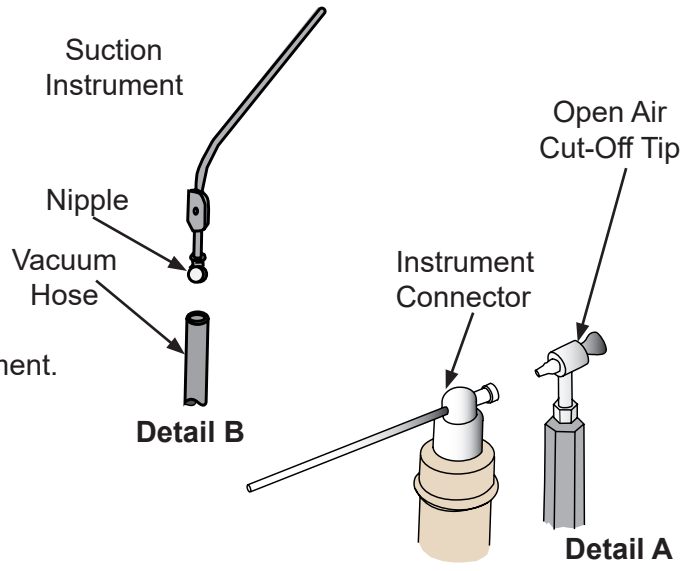

Figure 4-11. Instrument Attachment

5.1. Cleaning and Disinfecting

WARNING **ELECTRICAL SHOCK HAZARD! DISCONNECT ALL ELECTRICAL POWER PRIOR TO CLEANING AND DISINFECTING.**

CAUTION DO NOT ALLOW EXCESSIVE MOISTURE OR LIQUIDS TO COME IN DIRECT CONTACT WITH THE UNIT.

CAUTION DO NOT CLEAN ANY SURFACE WITH PETROLEUM-BASED SOLVENTS SUCH AS ACETONE OR METHYL ETHYL KETONE (M.E.K.), OR SALTY ACIDS SUCH AS HCL. THESE SOLVENTS CAN REMOVE PAINT AND CAUSE PERMANENT DAMAGE TO PLASTIC SURFACES. USE OF THESE CLEANING AGENTS IN A POORLY VENTILATED ROOM OR IF HANDLED IMPROPERLY, PRESENTS A DANGER TO INDIVIDUALS.

NOTE Do not allow cleaning agents or liquids to enter the power input.

NOTE Clean and disinfect after every patient according to CDC and OSHA requirements for noncritical devices.

NOTE When cleaning and disinfecting the cabinet, wear puncture and chemical-resistant gloves and other PPE Tto prevent occupational exposure to infectious agents and hazardous chemicals.

5.1.1. Preparation and Best Practice

Cleaning is the necessary first step of any disinfection process. Cleaning is a form of decontamination that renders the environmental surface safe by removing organic matter, salts, and visible soils, all of which interfere with microbial in activation. The physical action of scrubbing with detergents and surfactants and rinsing with water removes substantial numbers of microorganisms. If a surface is not cleaned first, the success of the disinfection process can be compromised. Removal of all visible blood and inorganic and organic matter can be as critical as the germicidal activity of a disinfecting agent.
Clean and disinfect clinical contact surfaces by using an EPA-registered hospital disinfectant with a low-level activity (i.e., HIV and HBV label claims) to intermediate-level activity (i.e., tuberculocidal claim) after each patient. Use an intermediate-level disinfectant if the cabinet is visibly contaminated. In addition, cleaning and disinfection are recommended at the end of daily work activities and are required if surfaces have become contaminated since their last cleaning.
Follow the instructions given by the manufacturer of the disinfectant solution, however:

- Apply disinfectant per the manufacturer’s instructions. Ensure that instructions for contact time are adhered to.
- After appropriate contact time, remove cleaning solution residue by wiping all surfaces with a clean soft cloth or lint-free tissue lightly moistened with distilled water.
- Dry as necessary.

5.1.2. Disposable Items

The vacuum tubing, filters, canisters and canister liners are disposable. Cleaning and disinfection are not recommended.

NOTE See the table 5-2 “Maintenance Activity Schedule” for frequency of changing the disposable components.

5.1.3. Glassware, Otoscopes, Mirror Warmer and Lightsource

Please refer to the instructions for use prepared by the manufacturers for cleaning and disinfection instructions.

5.1.4. Stainless Steel Surfaces

Clean with any commercial stainless steel cleaner/polish. Read the directions and test in an inconspicuous spot

5.1.5. Aluminum Composite and Laminate Surfaces

Clean with any non-abrasive cleaner recommended for Formica® surfaces.

5.1.6. Wilsonart® Work Surface

Clean with mild dish soap with a pH of 9 and warm water. Avoid window cleaners, as they can dull the surface finish. Always clean using a circular motion.

In addition, the metal and plastic surfaces of the cabinets can be safely cleaned and disinfected by using any product included in the list provided in Table 5-1. All cleaning products in this list are contained in the EPA List N, and have been tested on the various surfaces of the Maxi SMR Cabinets. The instructions from the cleaning agents must be followed to avoid damage to the cabinet materials. If a different product from the EPA List N will be used, it is strongly recommended to test an inconspicuous spot in the event the cleaner damages the cabinet surface.

Table 5-1 Cleaning and Disinfecting products derived from EPA List N:

EPA Reg. No.	Active Ingredient(s) & Concentration	Product Name	Company	Contact Time
1677-249	Isopropanol	Klercide 70/30 IPA	Ecolab Inc.	5 min.
46781-6	Quaternary ammonium; Isopropanol	Cavicide	Metrex Research	2 min.
70144-1	Quaternary ammonium; Isopropanol	Opti-Cide 3	Micro-Scientific LLC	2 min.
9480-4	Quaternary ammonium; Isopropanol	Super Sani-Cloth Germicidal Disposable Wipe	Professional Disposables International Inc.	2 min.
67619-24	Hydrogen peroxide	Clorox Commercial Solutions® Hydrogen Peroxide Cleaner Disinfectant	Clorox Professional Products Company	1 min.
67619-25	Hydrogen peroxide	Clorox Commercial Solutions® Hydrogen Peroxide Cleaner Disinfectant Wipes	Clorox Professional Products Company	2 min.
74559-1	Hydrogen peroxide	Accel TB	Virox Technologies Inc.	1 min.
74559-3	Hydrogen peroxide	Accel TB Wipes	Virox Technologies Inc.	1 min.

5.2. General Maintenance

WARNING **ELECTRICAL SHOCK HAZARD! DISCONNECT ALL ELECTRICAL POWER PRIOR TO SERVICING CABINET.**

WARNING **CABINET OR OPTIONAL EQUIPMENT SHALL NOT BE SERVICED OR MAINTAINED WHILE IN USE WITH A PATIENT.**

NOTE Check with the applicable biomedical engineering or local government agencies for additional guidelines on maintenance intervals on equipment in your facility.

Expected service life for cabinet: 7 Years
Cabinet disposal in accordance with local government regulations.

Table 5-2 Maintenance Activity Schedule

MAINTENANCE ACTIVITIES	Every Patient	Daily	Monthly	Yearly	As needed for repairs
Suction canister and tubing change	X				
Cabinet/Counter surface Cleaning	X	X			
Hydrophobic Filter			X		
Ground continuity – Stainless steel cabinet, Auxiliary outlet				Service Personnel	
Fuse: Cabinet, LED, Drawer Warmer					Service Personnel
Battery: Otoscope					X
Battery: Keypad					X

5.3. Replacing the S 600001 Disposable Canister

CAUTION Canister is **Single Use Only. Do not attempt to clean, sterilize or reuse canister.** Possible consequences of reuse include: 1) Implosion, 2) Fluid bypass, and 3) Exposure to blood borne pathogens.

CAUTION Dispose of the disposable suction canister containing medical waste in an environmentally safe manner per state and federal regulations.

CAUTION Care should be used by all personnel coming into contact with suction equipment. Wear gloves when handling suction equipment and hand washing is necessary to prevent the possibility of cross-contamination.

CAUTION Canister equipped with overfill protection. If overfill is reached, suction will stop. Replace canister with new one and dispose of contents as indicated.

Follow the steps below to replace the canister.

CAUTION Equipment intended to be used on flat plane. Using on inclined plane, may reduce capacity of collection canister.

Removal and Disposal

1. Turn off vacuum source and disconnect all tubing from the elbows attached to the canister lid.
1. Remove the two plastic elbows from the lid of the canister by pulling straight upward on each.
2. Dispose of the elbows.
3. Seal vacuum and patient ports with attached port caps.
4. Remove canister from bracket and dispose of the disposable suction canister containing medical waste in an environmentally safe manner per state and federal regulations. **DO NOT** lift canister by the lid.

Installation

1. Place lid on canister and press firmly around perimeter. Take elbows out of bags found in lid packages and apply tightly to patient and vacuum ports.
2. Apply pour spout cap firmly over pour spout and apply tandem port cap tightly over tandem port if not being used.
3. Attach patient tube to patient port (A) and vacuum tube to vacuum port (B). **See Figure 5-3**. Be sure tubing fits snugly.
4. Route vacuum tubing for the patient through the hole in the side of the cabinet.
5. Check all caps and connections for proper seal. Test the assembly for vacuum leaks by turning on vacuum source and occluding the patient tubing with finger or thumb.
6. To eliminate fluid contamination in vacuum line, make sure vacuum line is attached to vacuum port.
7. Install the new canister into the canister bracket.

NOTE Canister must remain upright

See the manufacturer's canister owner's manual ***599 0027*** for further information.

Table 5-3 Replacing Disposable Sunction Canister Components

Reference No.	Part Number	Description
1	S 400446	Suction Hose, 1/4 inch ID x 1.5 m long
2	S 850020-6 S 850020-12	Disposable Hydrophobic Filter, (6 or 12 pack)
3	S 600006 S 600012 S 600024	Disposable Suction Canister, 1200 ml (6, 12, or 24 pack)
4	S 600050DL	Disposable Canister Liner, 1000 ml (50 pk)
5	S 740600C	Suction Canister for use with S 600050DL Disposable Canister Liners

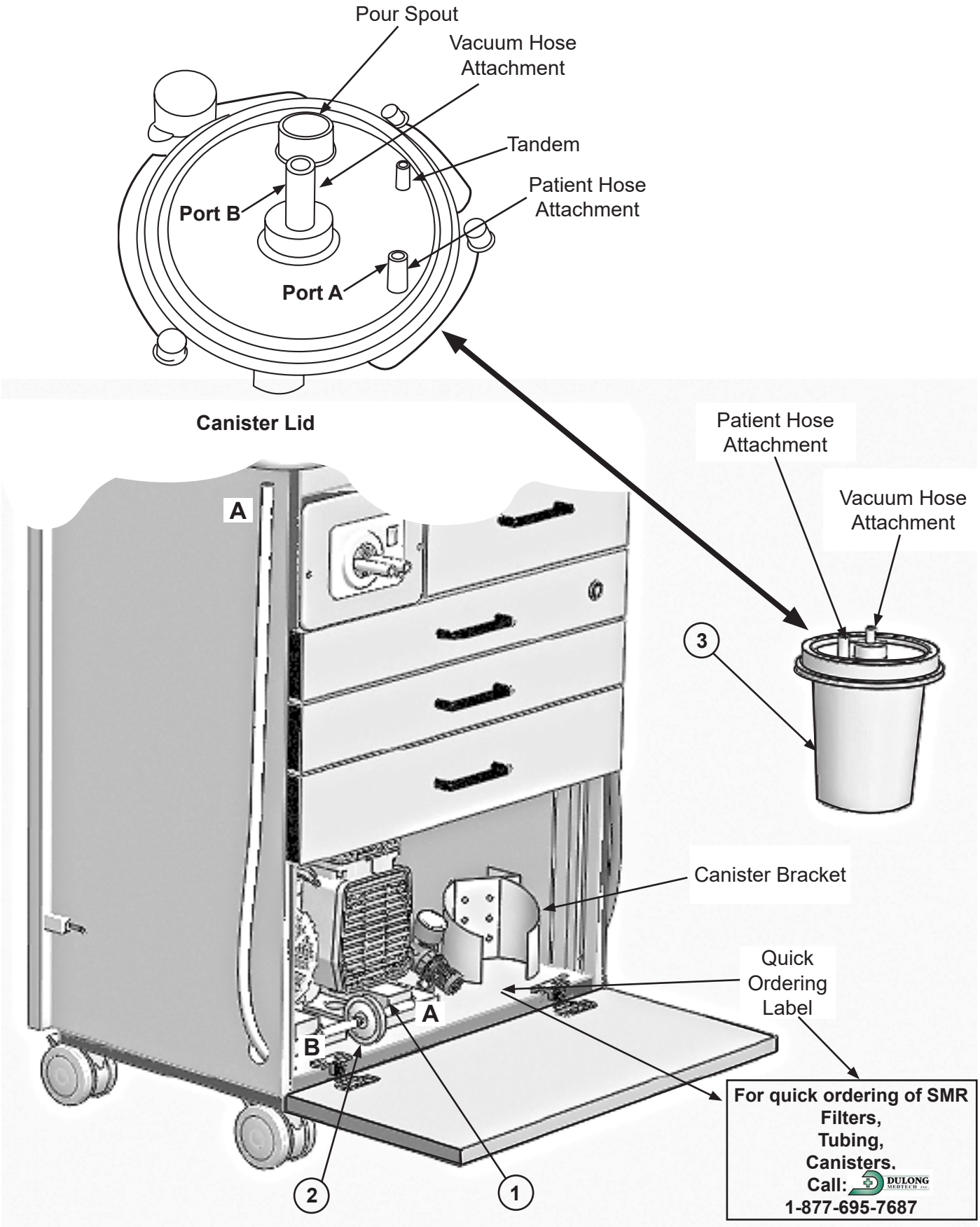

Figure 5-1. Replacing the S 600001 Disposable Canister

5.4. Replacing the S 740600C Disposable Canister Liner

CAUTION Canister Liner is **Single Use Only**, **Do Not attempt to clean, sterilize or reuse canister liner.** Possible consequences of reuse include: 1.) Implosion, 2) Fluid bypass, and 3) Exposure to blood borne pathogens.

CAUTION Dispose of the disposable suction canister liner containing medical waste in an environmentally safe manner per state and federal regulations.

CAUTION Care should be used by all personnel coming into contact with suction equipment. Wear gloves when handling suction equipment and hand washing is necessary to prevent the possibility of cross-contamination.

Follow the steps below to replace the canister liner.

Pull canister out of the cabinet at an angle to the left.

1. Turn on the vacuum pump.
2. DO NOT turn off vacuum until step 6.
3. Disconnect the patient tubing from the patient port and cap the port.
4. Firmly seal all ports other than the vacuum port.
5. Disconnect the vacuum tube from the vacuum port and cap the port.
6. Turn off the vacuum.
7. Dispose of the disposable suction canister containing medical waste in an environmentally safe manner per state and federal regulations.

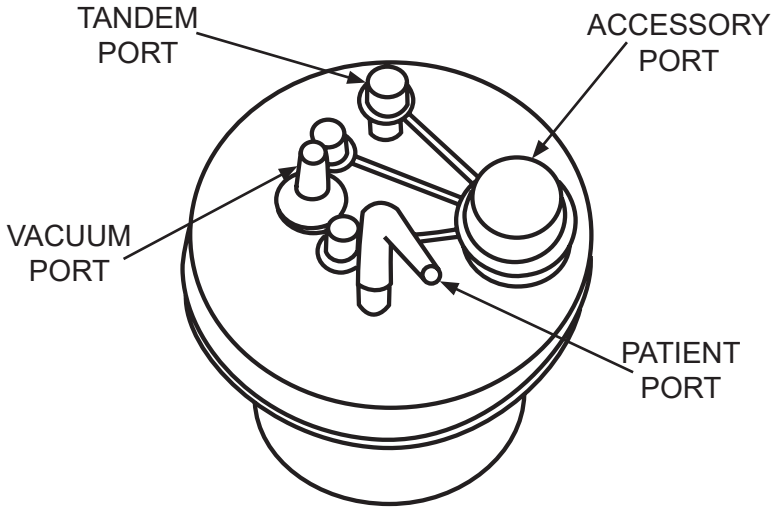

Figure 5-2. Replacing the S 740600C Disposable Canister Liner

Install

1. Inspect the canister, lid, and components to ensure there is no damage.
2. Insert the liner into the reusable canister.
3. Press down firmly on the lid to ensure proper seal
4. Connect the vacuum tubing (red tubing on the canister) to the Vacuum Port.
5. Connect the patient tubing (gray tubing) to the Patient Port.
6. Turn on the vacuum supply.

See the manufactures canister owner's manual ***599 0027*** for further information.

WARNING **A HYDROPHOBIC FILTER MUST BE USED TO PREVENT CONTAMINANT DAMAGE TO THE PUMP. GLOBAL SURGICAL WILL NOT RECEIVE OR REPLACE ANY PUMP WHERE THIS FILTER HAS NOT BEEN USED.**

CAUTION **Extended use of alcohol or solvents may reduce the efficiency of the microporous membrane of the HYDROPHOBIC FILTER. If these chemicals are used frequently, the filter should be inspected and replaced more often than the recommended time.**

CAUTION Care should be used by all personnel coming into contact with suction equipment. Wear gloves when handling suction equipment and hand washing is necessary to prevent the possibility of cross-contamination.

5.5. Replacing the S 850020 Hydrophobic Filter

The Hydrophobic Filter should be replaced every month or whenever filter/vacuum operation is impaired. Contact your Global Surgical Representative for a supply of filters.

To change the Hydrophobic Filter, follow the steps below and refer to **Figure 5-3**

1. Disconnect the hose from the vacuum pump to the filter.
2. Disconnect the hose from the disposable canister to the filter.
3. Dispose of the old filter.
4. Replace the tubing from the disposable canister to the new filter on the side that is marked "**FLUID SIDE**"
5. Attach the tubing from the vacuum pump to the other side of the new filter.

CAUTION Failure to replace this filter on a regular basis (at least once a month) will lead to reduced flow. Non-use will lead to possible contamination and pump failure.

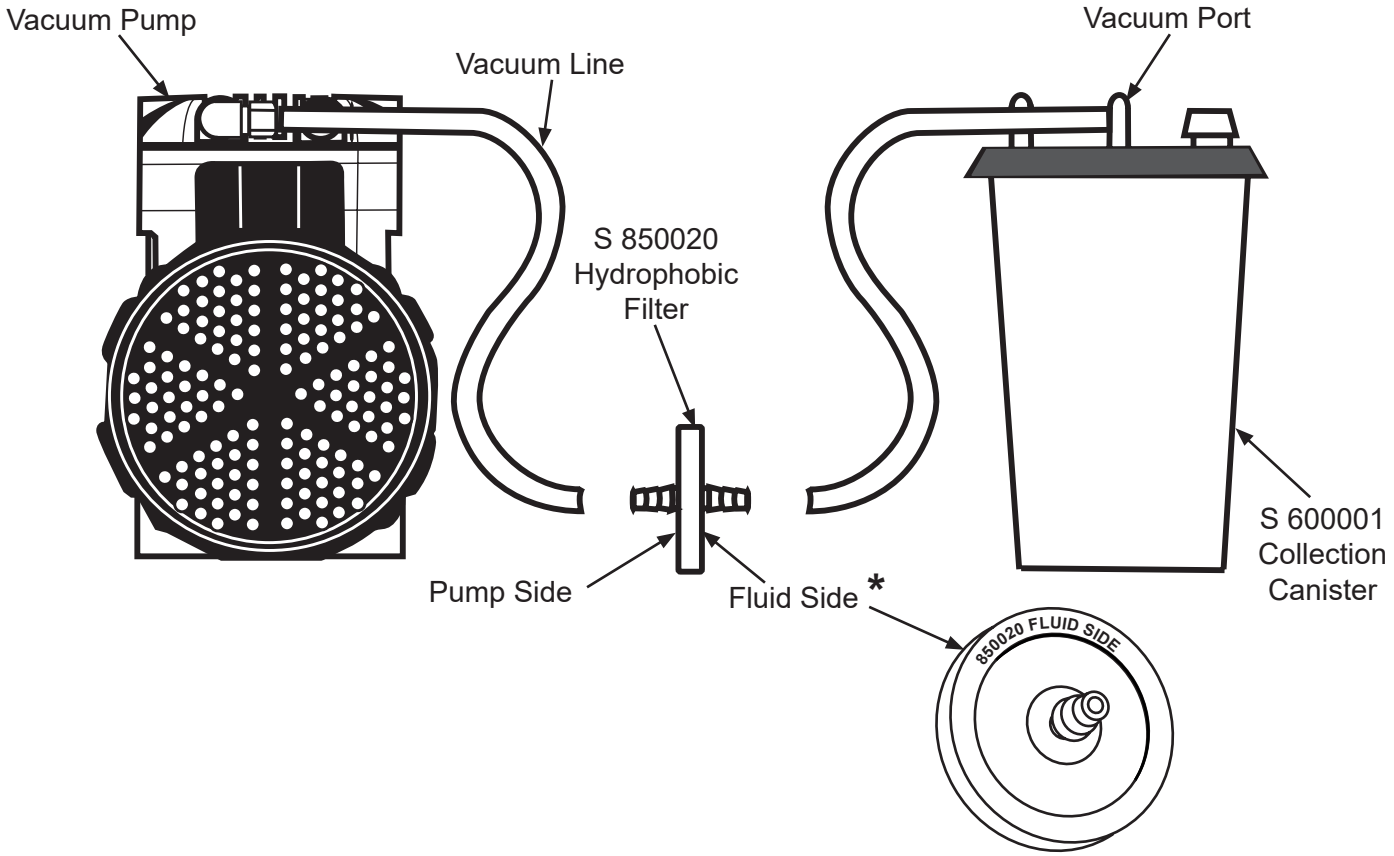

NOTE The side of the filter marked **"FLUID SIDE"** should always face towards the collection canister.

Figure 5-3. Replacing the S 850020 Hydrophobic Filter

5.6. Cleaning and Disinfecting the Optional S 740200LED LED Light Source With Turret

1. For cleaning and disinfecting the S 740200LED Light Source instructions see the manufacturer's owner's manual ***LIT 168, LLS-200***

WARNING **DISCONNECT ALL ELECTRICAL POWER PRIOR TO CLEANING AND DISINFECTING. RISK OF ELECTRIC SHOCK RESULTING IN DEATH OR INJURY IS POSSIBLE IF THE ELECTRICAL POWER IS NOT DISCONNECTED PRIOR TO CLEANING THE UNIT.**

5.7. Replacing the fuse in the Optional S 740200LED LED Light Source

WARNING **ELECTRICAL SHOCK HAZARD! DISCONNECT ALL ELECTRICAL POWER PRIOR TO REPLACING FUSE.**

WARNING **THE REPLACEMENT OF THE FUSE SHOULD BE DONE ONLY BY QUALIFIED SERVICE PERSONNEL.**

1. Unplug cabinet from the wall outlet.

2. Remove the top two drawers under the light source. If the cabinet has a drawer warmer disconnect the power to the drawer warmer and then remove the drawer.

3. Reach behind the light source and remove the power cord from the back of the light source. **See Figure 5-4**.

4. Remove the two screws on the bottom of the light source.

5. Remove the screws on the front of the light source plate.

6. Pull the light source forward to gain access to the fuse compartment on the back of the unit.

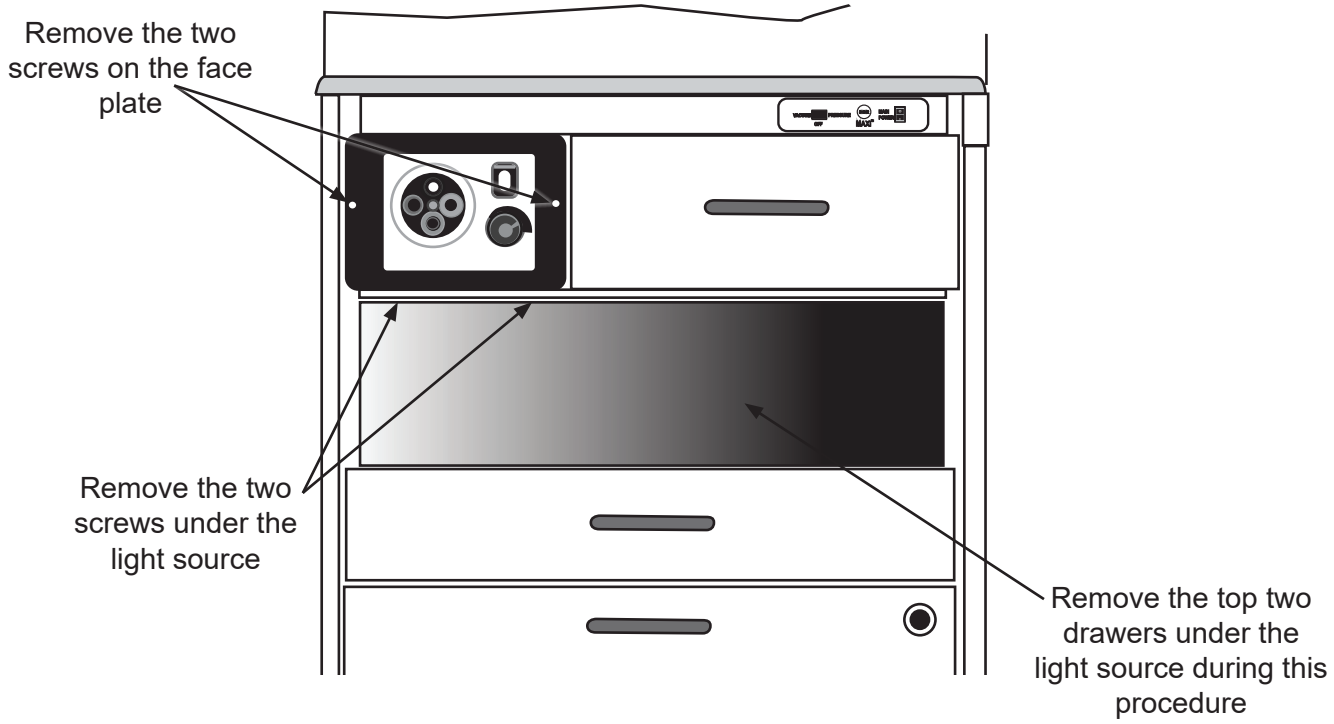

Figure 5-4. Replacing the S 740200LED Light Source Fuse

7. On back of unit, remove fuse by turning fuse cover counter-clockwise and pulling out fuse. Replace fuse with 2 AMP (1/4” x 1 ¼”) time delay 250V rated fuse.

8. Insert back into fuse housing and twist clockwise until it clicks into position.

9. Re-connect the power cord.

10. Push light source back in place and install screws.

11. Put drawers back in place in the same position from which they were removed.

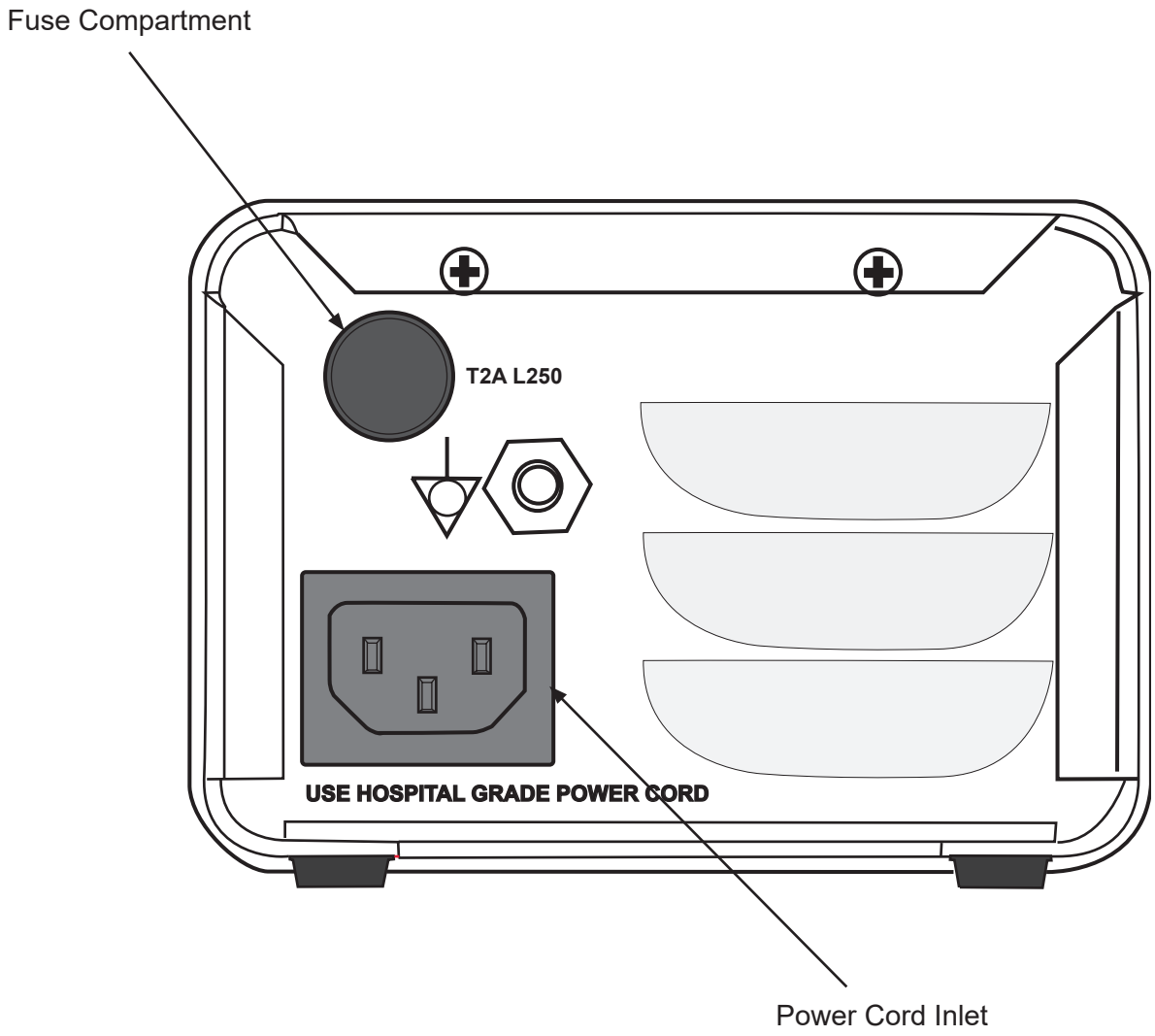

Figure 5-5. S 740200LED Light Source Back Panel

5.7. Replacing the Batteries in the S 740254KP Keyless Locking System

While the S 740254KP Keyless Locking System features a low battery indicator, it is recommended that the batteries be replaced annually. Mixing batteries of different chemistries could damage the system resulting in lock failure.

A Phillips screwdriver will be required to remove the battery cover (not included).

1. Loosen the retaining screw.
2. Remove battery cover.
3. Press CLEAR 5 times.
4. Remove old batteries.
5. Insert new batteries as shown in the illustration.
6. Reinstall battery cover, tighten retaining screw.

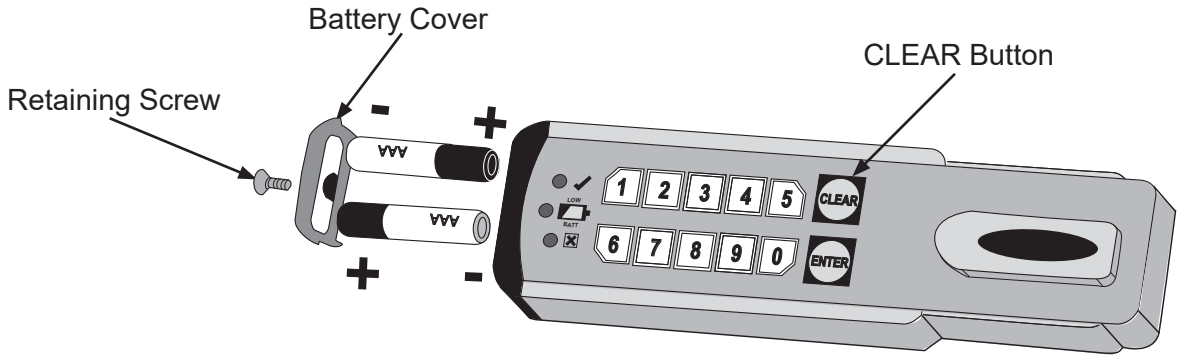

Figure 5-6. Replacing Batteries in the Keyless Locking System

5.7.1. Care and Cleaning of the S 740254KP Keyless Locking System

To clean the S 740254KP Keyless Locking System surface, apply non-acid based cleaner to a clean cotton cloth; do not spray cleaner directly on the system. Wipe down keypad and its respective housing surfaces of excess cleaner.

5.8. 123-007-072 Otoscope Battery Replacement

CAUTION

DO NOT INTERCHANGE BATTERIES OR BOTTOM CAPS BETWEEN DIFFERENT OTOSCOPE MODELS. USE OF INCORRECT COMBINATIONS MAY DAMAGE THE BATTERY, HANDLE OR CAUSE HANDLE TO OVERHEAT.

WARNING

REMOVE THE BATTERY IF THE EQUIPMENT IS NOT LIKELY TO BE USED FOR SOME TIME.

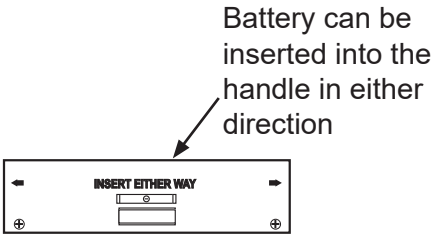

See HEINE instructions for use (***med 3514)*** that come with each battery for further information.
See HEINE instructions for use (***med 112679)*** that come with the rechargeable handle.

We encourage our customers to recycle this product whenever possible. Disposal of this unit must be performed in accordance with the applicable local environmental regulations.

5.9. S 740275 USB Auxiliary Outlet

Specification: USB Auxiliary Outlet with Dual AC (125VAC, 2.5A) and Dual USB Type A (5VDC, 3.6A) Connections, upper right side.

CAUTION **Grounding continuity should be checked periodically.**

NOTICE **If the 2.5A current is exceeded, the outlet will need to be reset. Reset the breaker on the power strip located in the pump compartment.**

The grounding continuity of the Auxiliary outlet should be checked yearly as part of the annual maintenance checklist.

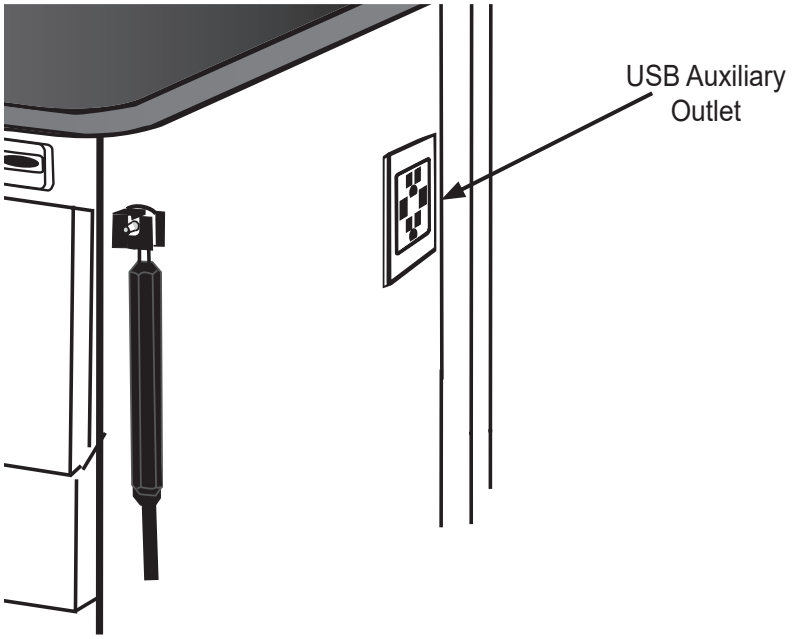

Figure 5-7. S 740275 USB Auxiliary Outlet

5.10. Servicing The S 740258A Drawer Warmer

WARNING **ELECTRICAL SHOCK HAZARD! DISCONNECT FROM MAINS POWER BEFORE ANY SERVICING OF DRAWER WARMER.**

WARNING **IT IS HIGHLY RECOMMENDED THAT THE SERVICING OF THIS EQUIPMENT BE PERFORMED BY QUALIFIED TECHNICIANS. SERVICING BY UNQUALIFIED INDIVIDUALS COULD RESULT IN PERSONAL INJURY.**

NOTICE Drawer Warmer Maximum Power 40 Watts

Service personnel may access Drawer Warmer component by removing plastic tray over the heating unit.

6.1. Troubleshooting Low Suction

CAUTION Canister is **Single Use Only**, **Do Not attempt to clean, sterilize or reuse canister.** Possible consequences of reuse include: 1.) Implosion, 2) Fluid bypass, and 3) Exposure to blood borne pathogens.

CAUTION Dispose of the disposable suction canister containing medical waste in an environmentally safe manner per state and federal regulations.

CAUTION Care should be used by all personnel coming into contact with suction equipment. Wear gloves when handling suction equipment and hand washing is necessary to prevent the possibility of cross-contamination.

The most expensive item that may eventually have to be replaced is the vacuum pump. When the suction is low due to blockage, the pump has to work harder and will wear out faster, so the important maintenance is replacing and/or cleaning items in the path of the suction: i.e. tubing, filters and canisters. When suction is low, a process of elimination among these components should be performed.. Use gloves as appropriate per facility's policies when handling these components.

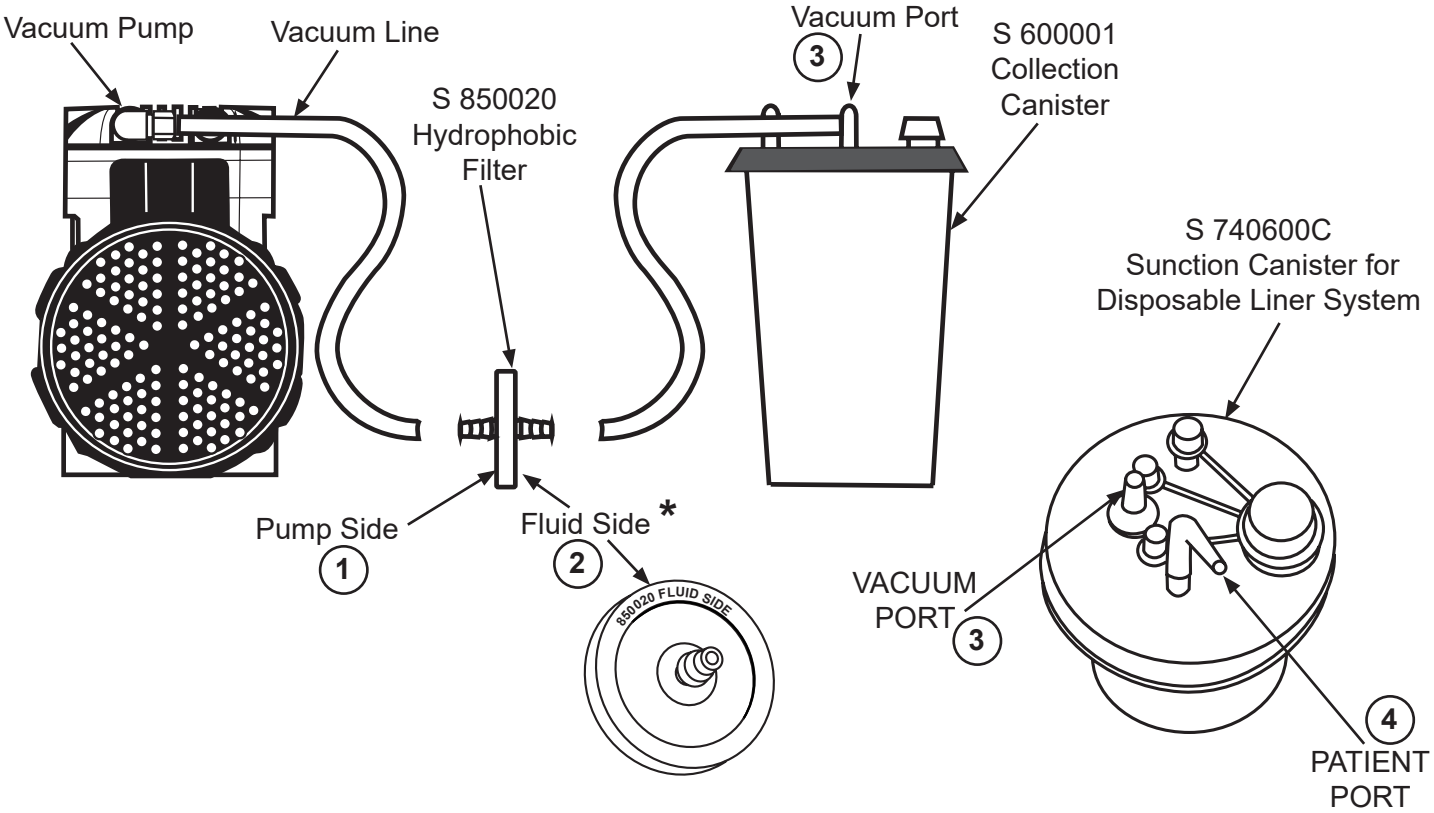

Figure 6-2. Diagnosing Low Suction

1. Start with the hydrophobic filter. This is the white disc in the middle of the tubing between the pump and canister. Pull the tubing off the pump side of the filter. Turn the pump on. Hold finger against the open end of the tubing coming off the pump. If you have good suction, you know the pump is still good. Continue to the next step. If you don't have good suction, with essentially nothing connected to the pump, the pump needs to be replaced.

2. Push the tubing back onto the hydrophobic filter barb. Pull the tubing off the opposite side of the hydrophobic filter. Now the only thing connected to the pump will be the short section of tubing and the filter. Turn on the pump. Put your finger over the filter. If the suction is not acceptable here, ensure the filter is installed with label "Fluid Side" closest to the canister not the pump. If not correct, turn it around and try again. If the there is still insufficient suction, the filter needs to be replaced, If you still have good suction, the pump and filter are okay. Continue to next step.

3. Push the tubing back on the hydrophobic filter barb. Pull the tubing off the vacuum right-angle fitting on the center of the canister lid. Turn on pump. Put your finger over the tubing. If there is not good suction, then the section of tubing needs to be replaced.

4. Push the tubing back on the vacuum right angle fitting on the center of the canister lid. Now pull the tubing off the patient right angle on the perimeter of the lid. Turn on the pump. Put your finger over the open patient right angle. If you still have good suction, then the pump, the filter, the tubing between the filter and canister, and the canister itself are okay, So the only thing left is the long section of tubing between the canister and the patient. Ensure there isn't a kink in the tubing, or that tubing isn't under a caster. Otherwise, assume it needs to be replaced.

Do the above steps in the exact sequence stated and you will find the cause of the low suction.

To prevent pump problems:

Filters will eventually clog with particulate from the air being sucked through them. Change as needed to prevent extra wear on the pump because it is having to pull air through a clogged filter. Replace filters once a month as a general rule, but depending on your usage, you may need to replace sooner or not as frequently. If suction is good at end of month, test again in 2 weeks. Always consider replacing the filter if suction is reduced, following the steps above to identify which component is affecting performance.

6.2. Troubleshooting the S 7401355 Suction/Pressure Foot Switch

Follow the steps below to check to see if the S 7401355 Foot Switch is functioning properly.

NOTICE To use the foot switch, the switch on the panel must be set to the **"OFF"** position.

Turn the Control Panel Switch
to the OFF Position

Figure 6-2 Foot Switch Control Panel

5. Switch the Foot Switch control panel switch to the "OFF" position. Press the right-side of the S 7401355 foot switch and listen for the pressure pump to activate. Hold your hand over the end of the pressure hose to verify that air is coming out.

6. Lift your foot off of the S 7401355 Foot Switch and with the control switch still in the **"OFF"** position press the left -side of the foot switch. Listen for the vacuum pump to engage. Using a piece of paper, verify that the vacuum is working by placing the paper over the end of the vacuum hose. If the vacuum holds the paper to the end of the hose, the vacuum is working.

6.3. Troubleshooting Guide

With proper use and care, there is very little that will fail on the SMR MAXI Cabinet or it's hardware. In the event that a mechanical component does fail, it is suggested that you contact Dulong Medtech Customer Service. Refer to Section 7 in this manual for contact information. If it becomes necessary to return the unit to the factory, again refer to Section 8 for instructions. Table 6-1 contains a list of many common problems that you may be able to correct yourself.

Table 6-1 Troubleshooting Guide

Malfunction	Possible Cause	Corrective Action
Vacuum and Pressure System		
Pressure system will not operate	A. No power to the pump.	Check cabinet plug and wall receptacle.
		Reset circuit breaker on internal outlet strip (on rear cabinet wall near pumps).
		Have Certified electrician diagnose and repair the problem.
	B. Fittings, hoses or connectors are loose or leaking.	1. Tighten all fittings and connections. 2. Repair or replace any leaking hoses, fittings or connections.
	C. Circuit breaker is tripped.	Reset circuit breaker on internal outlet strip. (on rear cabinet wall)
	D. Foot Switch or Control Panel Switch is malfunctioning.	If pump will operate from either the foot switch only or the control panel switch only. There is a malfunction. Contact Dulong Medtech Customer Service.
	E. Pump or its control circuit is malfunctioning.	Contact Dulong Medtech Customer Service.
Pressure Pump is noisy	A. Shipping tape and shims have been not been removed.	Cut and remove shipping tape and shims.
	B. Motor mounts are damaged.	Replace motor mounts. Contact Dulong Medtech Customer Service.
	C. Defective motor.	Contact Dulong Medtech Customer Service.
Low Air Pressure	A. Hose connections loose or leaking. Defective hose.	Tighten loose connections and repair or replace damaged hose.
	B. Regulator improperly adjusted.	Adjust regulator.
	C. Malfunctioning regulator.	Contact Dulong Medtech Customer Service
	D. Malfunctioning pump	Contact Dulong Medtech Customer Service.
Vacuum system does not operate	A. No power to pump	See "No Power" malfunction
	B. Fittings, hoses, or connections loose or leaking	1. Tighten all fittings and connections. 2. Repair or replace any leaking hoses, fittings or connections.
	C. Circuit breaker tripped.	Reset circuit breaker on internal outlet strip
	D. Foot Switch or Control Panel switch is malfunctioning	If pump will operate from either the Foot Switch only or the control panel switch only, then there is a malfunction. 1. Tighten all fittings and connections. 2. Repair or replace any leaking hoses, fittings or connections.
	E. Pump or its control circuit is malfunctioning.	Contact Dulong Medtech Customer Service.

Table 6-1. Troubleshooting Guide (cont.)

Malfunction	Possible Cause	Corrective Action
Vacuum and Pressure System (cont.)		
Low Vacuum	A. Collection Canister is full.	Dispose of collection canister in environmentally, biohazard or infectious waste safe manner and replace with a new one.
	To isolate the following problems, begin at the pump, and one at a time, disconnect tubing from the pump, filter and canister, Check for vacuum. See Section 6.1 “Troubleshooting Low Sunction”.	
	B. Canister or its lid is cracked or the lid is not secured.	Replace canister or secure lid.
	C. Contaminated hydrophobic filter installed backwards	Replace filter or remove it from the line and reverse it.
	D. Fittings, hoses, or connections loose or leaking	1. Tighten all fittings and connections. 2. Repair or replace any leaking hoses, fittings or connections.
	E. Pump or its control circuit is malfunctioning.	Contact Dulong Medtech Customer Service
Cabinet Electrical System		
No Power	A. Cabinet is not plugged in or plug is loose from the wall receptacle.	Check cabinet plug and wall receptacle.
	B. Circuit Breaker Tripped.	Reset circuit breaker on internal outlet strip (on rear cabinet wall near pumps).
	C. Service is interrupted at wall receptacle.	Have Certified electrician diagnose and repair the problem.
S 740200LED Light Source		
LED Light Source, The power indicator is not lit	A. AC power cord connection is loose	Check that the AC power cord is properly connected.
	B. Check the unit fuses.	If necessary replace fuses
LED Light Source power indicator is lit, but lamp will not ignite.	Light output intensity is set too low.	Turn intensity control knob clockwise to increase light output intensity.

Table 6-1 Troubleshooting Guide (cont.)

Malfunction	Possible Cause	Corrective Action
S WA77710 Corded Illuminator		
Illuminator does not operate (corded only)	A. No power	See “No Power” malfunction above
	B. Loose Connection	Check all cord connections and head to handle connections.
	C. Instrument loose or defective	Reseat or replace bulb.
	D. Illuminator circuit malfunction	Contact Dulong Medtech Customer Service
	E. both instruments are out of the cradle	Only one instrument can be powered at a time
	F. The lamp is burned out	Install a new lamp.
Can not change illuminator intensity (corded only)	Illuminator circuit malfunction	Contact Dulong Medtech Customer Service
123-007-072 Charger, Rechargeable Handle		
Recharge handle either doesn’t work or won’t hold a charge	Batteries not charged	Replace handle in recharging well. Complete recharging can take approximately 14 hours. If problem persists call Dulong Medtech Customer Service.
	Recharging well is not charging	1. Try charging handle in the other well. If one handle does not charge in either well, and the batteries are fresh, replace handle. 2. Try charging the other handle in the well that isn’t charging. If neither handle charges, the recharging circuit is malfunctioning. Contact Dulong Medtech Customer Service.
	Defective batteries	Replace batteries

7.1. Cabinet Pump Compartment Components

NOTE: If you need more information than provided in this user manual, Dulong Medtech will provide assistance to SERVICE PERSONNEL for parts repair. **See Section 8.2** for Dulong Medtech contact information.

Table 7-1 Pump Compartment Components

Reference No.	Part Number	Description
1	102-027-011	Pressure Hose Assembly
2	102-005-251	Air Reservoir Assembly Pulsation Damper
3	027-021-032	Pressure Tubing
4	102-005-144	Air Regulator-Gauge Assembly
5	S 400446	Suction Hose, 1/4” ID x 1.5 m long
6	160-066	Hose Clamp
7	160-413	Screw, Suction Hose Clamp
8	102-032-612	Vacuum Pump Assembly, 115V
9	S850020	Disposable Hydrophobic Filter
10	102-009-017	Pressure Pump Assembly, 115V
11	S 600050	Canister Bracket Assembly
12	S 600001	Disposable Sunction Canister, 1200 ml
13	S 740600C	Sunction Canister for Disposal Liner System
14	S 600050DL	Disposable Canister Liner - 50 Pack

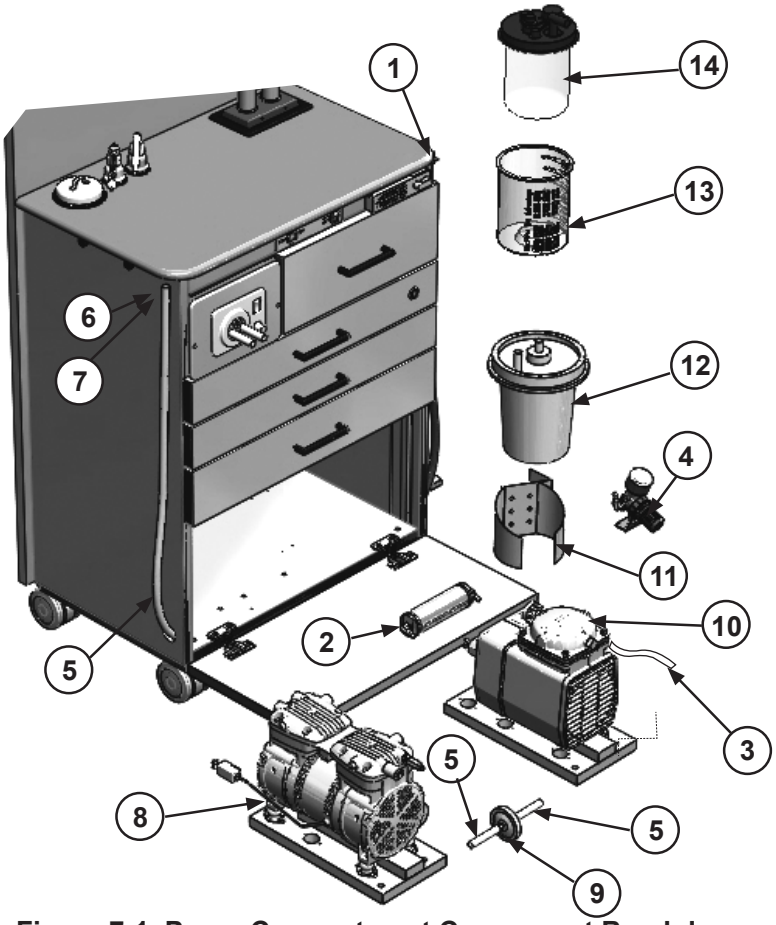

Figure 7-1. Pump Compartment Component Breakdown

7.2. Cabinet Schematic

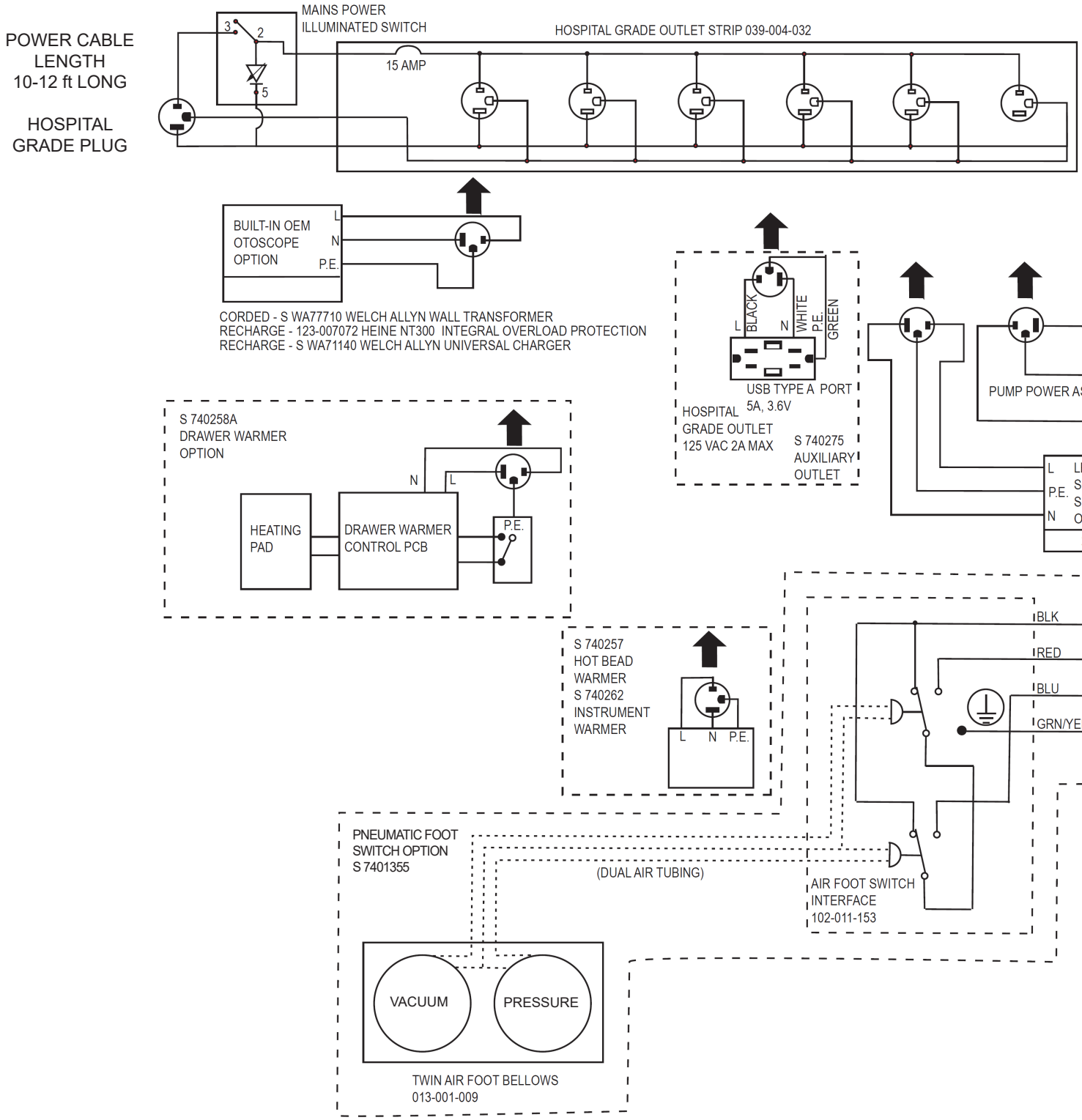

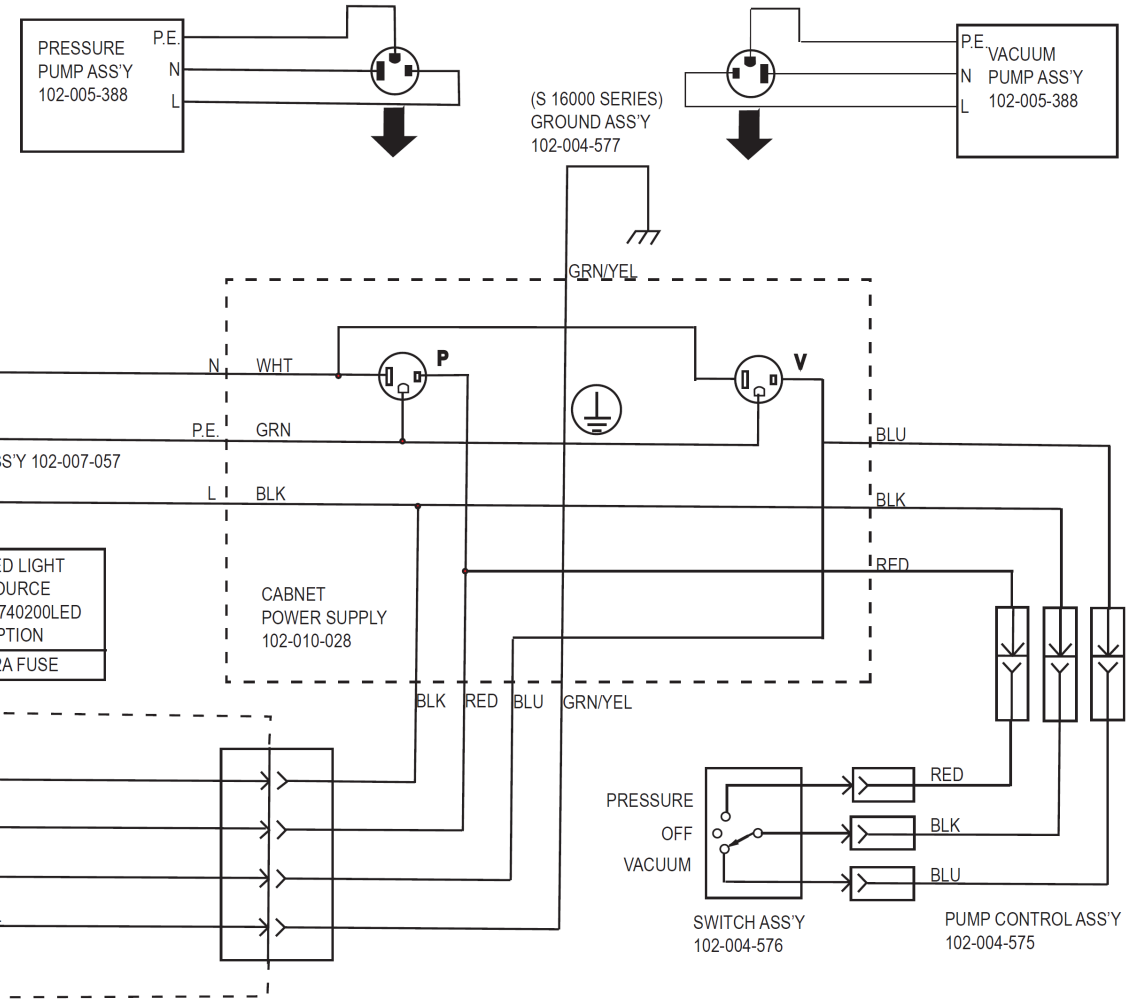
PRESSURE
PUMP ASS'Y
102-005-388
P.E.
N
L
(S 16000 SERIES)
GROUND ASS'Y
102-004-577
P.E.
N
L
VACUUM
PUMP ASS'Y
102-005-388
GRN/YEL
N
WHT
P
V
P.E.
GRN
BLU
S'Y 102-007-057
L
BLK
BLK
ED LIGHT
OURCE
740200LED
PTION
RA FUSE
RED
CABNET
POWER SUPPLY
102-010-028
BLK
RED
BLU
GRN/YEL
PRESSURE
OFF
VACUUM
RED
BLK
BLU
SWITCH ASS'Y
102-004-576
PUMP CONTROL ASS'Y
102-004-575

For service or warranty information contact:

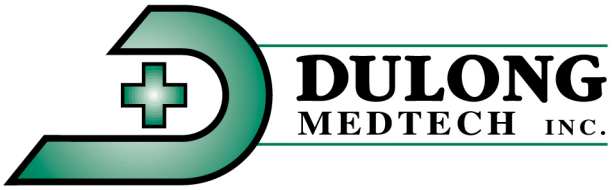

5605 St. François
St. Laurent, Québec H4S 1W6
CANADA

Telephone:	(514) 337-7155
Fax:	(514) 337-7838
Toll Free:	1-877-695-7687
Web site:	www.dulongmedtech.com
e-mail	info@dulongmedtech.com

Business Hours Monday through Friday from 8:00 a.m. to 5:00 p.m.
Eastern Standard Time (EST)

Appendix A

Appendix A-1 Cabinet Model/Type A-1
Appendix A-2 List of Accessories..... A-2
Appendix A-3 Test Standards..... A-6

Appendix A-1

Cabinet Model/Type

S Number		Number			Number			Number		D- Number or Letter	
Model No. Beginning	US/ Canada	1St Segment No.	Exterior Material	Size	2nd Segment #	Color	Countertop Color (default)	3rd Segment #	Otoscopes/ options	Ending	Designation
S1	WS/Int'l (Non-Canada)	60	Stainless Steel	Standard	0	Stainless Steel	Raven Mirage	00	110-240V Corded Otoscope	D	110-120v
S3	Canadian Only	66	Stainless Steel	Tall	2nd Segement Aluminum Composite	—	*Optional Quarry Melange	01	110-240V Rechargeable Otoscope NT300	D-T	Deluxe Tall 110-120v
		68	Stainless Steel	Deluxe	1	Beachwood	Yukon Riverstone	—	—	D-T-230	Deluxe Tall 220-240v
		70	Aluminum Composite	Standard	2	Maple	Midnight Melange	—	—	D-230	220-240v
		76	Aluminum Composite	Tall	3	White	Indigo Melange	—	—		
		78	Aluminum Composite	Deluxe	4	Metallic Grey	Raven Mirage	40	Storage Cabinet (no electrical items)		
		79	Laminate	Mini	5	Brushed Carbon	Yukon Riverstone	70	115V No Otoscopes		
					6	Beige/Oyster	Khaki Brown Tempest				
					7	Timber Zebrawood (	Yukon Riverstone				
					Laminate Exterior (179 Mini Only)	—	—				
					2	Misty Granite (formerly White Nebula)	Black Formica				
					8	Fashion Grey	Black Formica				

Appendix A-2

Accessories

PART NUMBER	DESCRIPTION
S 189000	LOCKING CABINET FOR MAXI CABINET
S 189000S	LOCKING CABINET FOR MAXI CAB, SHORT
S 3312	OINTMENT JAR 3-1/8 X 2-1/2
S 400446	SUCTION TUBING .406 OD X 1/4” ID, GREY
S 600001	DISPOSABLE SUCTION CANISTER
S 600006	DISPOSABLE SUCTION CANISTER 6 PACK
S 600012	DISPOSABLE SUCTION CANISTER 12 PACK
S 600024	DISPOSABLE SUCTION CANISTER 24 PACK
S 600050	DISPOSABLE SUCTION CANISTER HOLDER FOR PUMP BAY
S 600050DL	DISPOSABLE LINER FOR SUCTION CANISTER # S 740600C, 1000CC - 50 PACK
S 600051	DISPOSABLE SUCTION CANISTER HOLDER, CURVED, USER POSITIONABLE
S 600052	DISPOSABLE SUCTION CANISTER HOLDER, SQUARE WITH LID, USER POSITIONABLE
S 740110	SOLID WORK SURFACE - STANDARD COLOR, BUT NOT DEFAULT COLOR
S 7401355	SUCTION / PRESSSURE FOOTSWITCH, PNEUMATIC
S 7401795	ASSY-OTO HANDLE & CORD - S16/17/18
S 740200LED	LED LIGHTSOURCE WITH TURRET: ACMI, WOLF, OLYMOUS, KARL STORZ
S 740200LED-230	LED LIGHTSOURCE WITH TURRET: ACMI, WOLF, OLYMOUS, KARL STORZ - 230V
S 740230-01	IEC FEMALE TO EUROPEAN PLUG TYPE CEE7/7, 2 METERS
S 740230-05	IEC FEMALE TO UK PLUG TYPE G, 2 METERS
S 740230-06	IEC FEMALE TO AUSTRALIAN PLUG TYPE I, 2 METERS
S 740241	STAINLESS STEEL Q-TIP CONTAINER
S 740244	SLIDE-OUT WRITING SHELF
S 740253	MIRROR WARMER SHELF FOR STANDARD CABINET, FULL WIDTH, 7” DEPTH - REQUIRES HIGH BACK
S 740253DX	MIRROR WARMER SHELF FOR DELUXE CABINET, FULL WIDTH, 7” DEPTH - REQUIRES HIGH BACK
S 740254	LOCK FOR ALL DRAWERS ALIGNING TO CABINET RIGHT SIDE, KEYED DIFFERENTLY THAN PUMP BAY
S 740254KP	LOCK FOR ALL DRAWERS ALIGNING TO CABINET RIGHT SIDE, ELECTRONIC KEYPAD
S 740254M	LOCK FOR ALL DRAWERS ALIGNING TO CABINET RIGHT SIDE, KEYED ALIKE (KEY C415A)
S 740257	GLASS BEAD MIRROR WARMER 120V
S 740258A	THERMOSTATICALLY CONTROLLED DRAWER WARMWER WITH 9 HOUR AUTO-OFF, 110-120V
S 740259	RADIANT INSTRUMENT WARMER, 110-120V
S 740259-230	RADIANT INSTRUMENT WARMER - 220-240V
S 740260	BUILT-IN TISSUE DISPENSER - POSITIONED IN HIGH BACK (REQUIRED)
S 740261	BUILT-IN GLOVE DISPENSER - POSITIONED IN HIGH BACK (REQUIRED)

Accessories (continued)

S 740270	STAINLESS STEEL, TISSUE DISPENSER BOX - USER POSITIONABLE
S 740271	STAINLESS STEEL, GLOVE DISPENSER BOX - USER POSITIONABLE
S 740273	INDENTATION FOR MIRROR WARMER IN CABINET COUNTER TOP
S 740274D	TRADITIONAL GLASSWARE UPGRADE FOR DELUXE CABINET
S 740274S	TRADITIONAL GLASSWARE UPGRADE FOR STANDARD CABINET
S 740275-USB	AUXILIARY OUTLET WITH DUAL AC AND DUAL USB TYPE A CONNECTIONS, UPPER RIGHT SIDE
S 740276LOW	LOW BACK OPTION FOR ALL ALUMINUM COMPOSITE CABINETS
S 740277	BRACKET FOR RECHARGEABLE HEINE NT300 SIDE MOUNT RECHARGE UNIT
S 740280	KIT, OTOSCOPE, CORDED, 230V
S 740282	DRAWER DIVIDER KIT FOR 1 DRAWER - FRONT TO BACK
S 740282COMB	DRAWER DIVIDER KIT FOR 1 DRAWER - CUSTOM CONFIGURATIONS
S 740282H	DRAWER DIVIDER KIT FOR 1 DRAWER - SIDE TO SIDE
S 740283	DOOR TRASH PORT FOR DELUXE CABINETS
S 740284	DIRTY INSTRUMENT TRAY, INSET IN TOP OF DELUXE CABINET, LEFT SIDE
S 740285	GLASSWARE HOLE ADDITITION OR LOCATION CHANGE, CABINET TOP OR SHELF
S 740286	SHELF FOR STANDARD CABINET, FULL WIDTH, 7" DEPTH - REQUIRES HIGH BACK
S 740286DX	SHELF FOR DELUXE CABINET, FULL WIDTH, 7” DEPTH - REQUIRES HIGH BACK
S 740288STD	FULL EXTENSION DRAWER SLIDES - STANDARD / DELUXE - 5 DRAWERS
S 740288TALL	FULL EXTENSION DRAWER SLIDES - STANDARD-TALL / DELUXE-TALL - 7 DRAWERS
S 740600C	SUCTION CANISTER FOR USE WITH DISPOSABLE LINERS, INCLUDES 5 LINERS # S 600050DL
S 850020	DISPOSABLE HYDROPHOBIC FILTER FOR SUCTION LINE - SINGLE
S 850020-12	DISPOSABLE HYDROPHOBIC FILTER FOR SUCTION LINE - 12 PACK
S 850020-6	DISPOSABLE HYDROPHOBIC FILTER FOR SUCTION LINE - 6 PACK
S A163	GLASS ATOMIZER, CLEAR
S A163OT	GLASS OUTLET TUBE FOR # S A163
S A175	GLASS POWDER BLOWER
S A177	GLASS IRRIGATION SYRINGE
S A177OT	GLASS OUTLET TUBE FOR ANTHONY #177
S A180	GLASS NEBULIZER
S A286	GLASS ATOMIZER, AMBER
S A286OT	PLASTIC OUTLET TUBE FOR # S A286
S AZ2020	ENDOCADDY SINGLE TUBE
S AZ4040	ENDOCADDY DOUBLE TUBE
S DV150OT	OUTLET TB F/DV163,175,180 - 6 PK
S DV163	GLASS ATOMIZER, CLEAR
S DV175	GLASS POWDER BLOWER
S DV177	GLASS IRRIGATION SYRINGE
S DV177OT	GLASS OUTLET TUBE, 4 3/4” FOR # S DV177

Accessories (continued)

S DV180	GLASS NEBULIZER
S DV200	DEVILBISS GLASSWARE UPGRADE, STANDARD CABINET
S DV286	GLASS ATOMIZER AMBER
S DV286OT	PLASTIC OUTLET TUBE, 4 1/3” FOR # S-DV286
S DV300	DEVILBISS UPGRADE DELUXE CABINET
S DV400	TRADITIONAL DEVILBISS GLASSWARE UPGRADE, STANDARD CABINET
S DV500	TRADITIONAL DEVILBISS GLASSWARE UPGRADE, DELUXE CABINET
S HOTOBATT	BATTERY, HEINE, NiMH, USE WITH BETA NT HANDLE & NT300 CHARGER
S HOTOBATT-N3	BATTERY, HEINE, NiMH, USE WITH BETA NT HANDLE & NT300 CHARGER
S HOTOHNDL	OTOSCOPE HANDLE, HEINE, NiMH, USE WITH BETA NT HANDLE & NT300 CHARGER
S WA03100	REPLACEMENT LAMP FOR OTOSCOPES - 1 PACK
S WA11710	OPHTHALMOSCOPE HEAD, HALOGEN
S WA20200	PNEUMATIC OTOSCOPE HEAD, HALOGEN
S WA21501	INSUFFLATOR BULB FOR # S WA20200
S WA21504	INSUFFLATOR BULB FOR # S WA25021 & # S WA21504
S WA21700	OPERATING OTOSCOPE HEAD, HALOGEN
S WA22100	SPECULAS FOR # S WA21700 AND # S WA20200 - 5-PACK
S WA23810	MACROVIEW OTOSCOPE HEAD, HALOGEN
S WA24400	SPECULAS FOR # S WA25021 4-PACK
S WA25021	DIAGNOSTIC OTOSCOPE HEAD, HALOGEN
S WA41100	FINNOFF TRANSILLUMINATOR, HALOGEN
S WA43300	CURVED ALL-PURPOSE TRANS-ILLUMINATOR, HALOGEN
S WA71140	OTOSCOPE HANDLE, WELCH ALLYN WITH NI-CAD BATTERY
S WA77710	WALL TRANSFORMER W/OTOSCOPE HANDLES, 110 V

Appendix A-3

Test Standrds

SMR cabinet was tested to IEC 60601-1-2 ed4.0 (2014-02):
Additional information provided upon request from Dulong Medtech at (514) 337-7155.

Test / Standard	Emissions Class and Group /immunity test level	Result
CISPR 11, Conducted Emissions	Class B Group 1	Pass
CISPR 11, Radiated Emissions	Class B Group 1	Pass
IEC 61000-3-2 Harmonic Current Emissions	Class A	Pass
IEC 61000-3-3 Voltage Fluctuations Emissions	All parameters	Pass
IEC 61000-4-2 Electrostatic Discharge Immunity	8kV air / 15kV contact	Pass
IEC 61000-4-3 Radiated RF Immunity	3V/m, 80-2700MHz, 80% 1kHz AM	Pass
IEC 61000-4-3 Proximity Fields from RF Wireless Equipment	Section 8.10 of the IEC 60601-1-2 standard	Pass
IEC 61000-4-4 Electrical Fast Transients and Burst Immunity	Up to 2kV, 100kHz repetition rate	Pass
IEC 61000-4-5 Surges Immunity	Standard test procedure	Pass
IEC 61000-4-6 Conducted Disturbances, Induced by RF Fields Immunity	3V, 0.15-80MHz, 80% 1kHz AM 6V in ISM Band within 0.15-80MHz, 80% 1kHz AM	Pass
IEC 61000-4-8 Power Frequency Magnetic Fields Immunity	30A/m	Pass
IEC 61000-4-11 Voltage Dips Immunity	Table 5 of the IEC 60601-1-2 standard	Pass
IEC 61000-4-11 Voltage Interruptions Immunity	0% (100% reduction), 5 sec	Pass
ISO 10079-1	Medical Suction Equipment	Pass

ETL CLASSIFIED

C US

Intertek

91613

Dulong Medtech Inc.
5605 St. François
St. Laurent, Québec H4S 1W6
CANADA