SERVICE MANUAL

Neonatal Horizon® Headwall System

From Hill-Rom

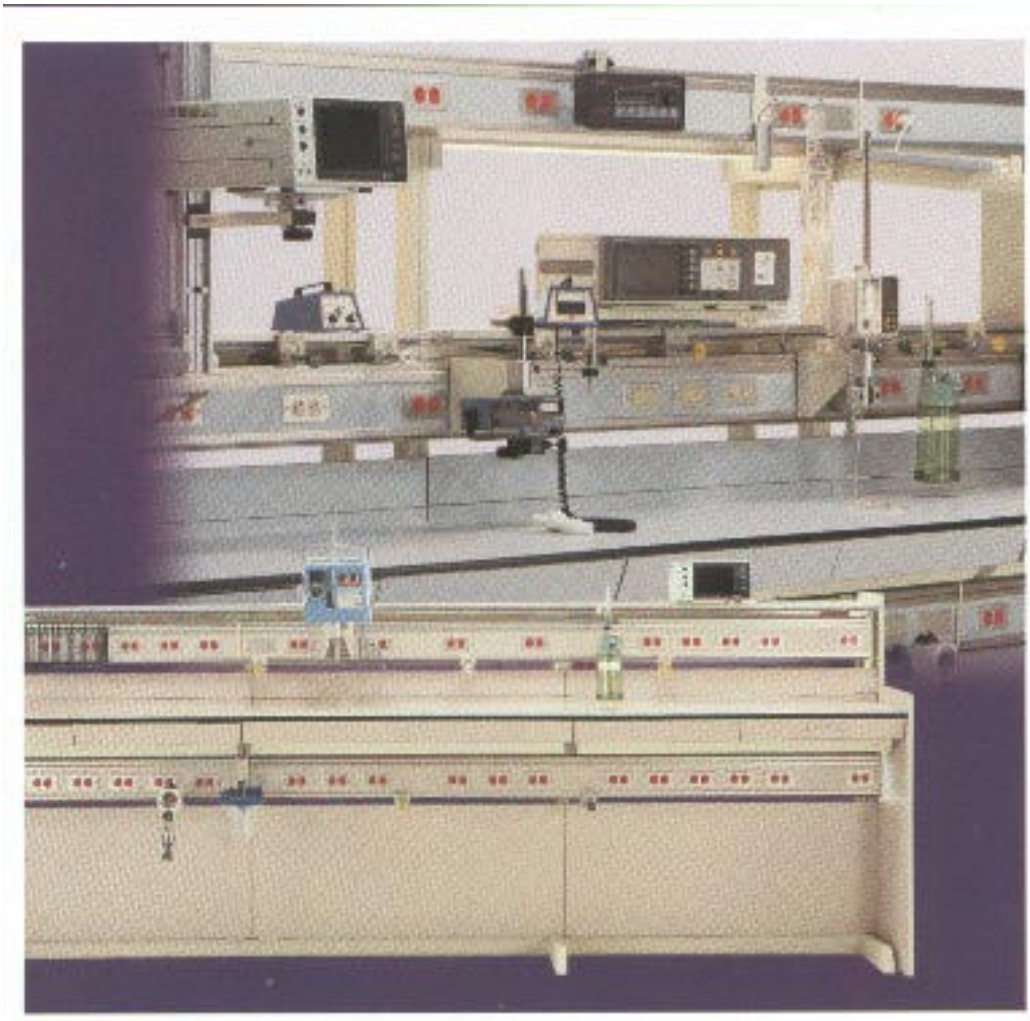

Product No. P1001

For Parts Or Technical Assistance
USA (800) 445-3720 Canada (800) 267-2337

man238

Neonatal Horizon® Headwall System Service Manual

Revisions

Revision Letter	Pages Affected	Date
Original Issue		January, 1999

man238

COPYRIGHT© 1999 HILL-ROM, INC.

All rights reserved. No part of this text shall be reproduced or transmitted in any form or by any means, electronic or mechanical, including photocopying, recording, or by any information or retrieval system without written permission from HILL-ROM, INC. (Hill-Rom).

First Edition

First Printing 1999

Printed in the USA

Bird® is a registered trademark of Bird Products Corporation.

Chemetron™ is a trademark of Allied Healthcare Products, Inc.

Exam Plus® is a registered trademark of Hill-Rom, Inc.

Hill-Rom® is a registered trademark of Hill-Rom, Inc.

Horizon® is a registered trademark of Hill-Rom, Inc.

Hubbellock® is a registered trademark of Hubbell Incorporated.

Oxequip™ is a registered trademark of Allied Healthcare Products, Inc.

Puritan-Bennet™ is a trademark of Puritan-Bennett Corporation.

The information contained in this manual is subject to change without notice. Hill-Rom makes no commitment to update or keep current, the information contained in this manual.

The only product warranty intended by Hill-Rom is the express, written warranty accompanying the bill of sale to the original purchaser. Hill-Rom makes no other warranty, express or implied, and in particular, makes no warranty of merchantability or fitness for a particular purpose.

Additional copies of this manual can be obtained from Hill-Rom.

Table of Contents

Chapter 1: Introduction

Purpose . . . . . 1 - 3
Audience . . . . . 1 - 3
Organization . . . . . 1 - 3
Chapter 1: Introduction . . . . . 1 - 3
Chapter 2: Troubleshooting Procedures . . . . . 1 - 3
Chapter 3: Theory of Operation . . . . . 1 - 3
Chapter 4: Removal and Replacement Procedures . . . . . 1 - 3
Chapter 5: Parts List . . . . . 1 - 3
Chapter 6: General Procedures . . . . . 1 - 4
Chapter 7: Accessories . . . . . 1 - 4
Typographical Conventions . . . . . 1 - 5
Introduction . . . . . 1 - 6
Overview . . . . . 1 - 6
System Features . . . . . 1 - 7
Specifications . . . . . 1 - 8
Physical Description . . . . . 1 - 8
Electrical Description . . . . . 1 - 10
Regulations, Standards, and Codes . . . . . 1 - 12
UL Classification . . . . . 1 - 12
Neonatal Horizon® Headwall System . . . . . 1 - 12
Model Identification . . . . . 1 - 13
Safety Tips . . . . . 1 - 14
Warning and Caution Labels . . . . . 1 - 16

Chapter 2: Troubleshooting Procedures

Getting Started . . . . . 2 - 3
Initial Actions . . . . . 2 - 3

Function Checks . . . . . 2 - 4
Final Actions . . . . . 2 - 5
Circuit Breaker Is Inoperative . . . . . 2 - 6
Standard or Critical Branch Electrical Receptacle Is Inoperative . . . . . 2 - 9
Down Light Does Not Come On . . . . . 2 - 10
Indirect Light Does Not Come On . . . . . 2 - 11
Night Light Does Not Come On . . . . . 2 - 12
Chart Light Does Not Come On . . . . . 2 - 13
Dimmer Switch Will Not Operate the Light . . . . . 2 - 15
Timed Light Switch or Toggle Switch Does Not Operate Properly . . . . . 2 - 16
STAT Clock/Timer Will Not Operate . . . . . 2 - 18

Chapter 3:
Theory of Operation

Electrical System . . . . . 3 - 3
Electrical Switches . . . . . 3 - 5
Power Receptacles . . . . . 3 - 6
Theory of Operation . . . . . 3 - 8
Service Chase . . . . . 3 - 8
Raceways . . . . . 3 - 8
Medical Gas System . . . . . 3 - 8
Standard Power . . . . . 3 - 8
Critical Branch Power . . . . . 3 - 8
Communications/Low Voltage . . . . . 3 - 9

Chapter 4:
Removal and Replacement Procedures

Electrical Receptacle . . . . . 4 - 3
Removal . . . . . 4 - 3
Replacement . . . . . 4 - 6
Ground Receptacle . . . . . 4 - 7
Removal . . . . . 4 - 7
Replacement . . . . . 4 - 9

Dimmer Switch . . . . . 4 - 10
Removal . . . . . 4 - 10
Replacement . . . . . 4 - 11
Timed Light Switch and Toggle Switch . . . . . 4 - 12
Removal . . . . . 4 - 12
Replacement . . . . . 4 - 13
Adjustment . . . . . 4 - 14
Chart Light or Night Light Switch . . . . . 4 - 15
Removal . . . . . 4 - 15
Replacement . . . . . 4 - 16
Chart Light or Night Light Bulb . . . . . 4 - 17
Removal . . . . . 4 - 17
Replacement . . . . . 4 - 18
Down Light Bulb . . . . . 4 - 19
Removal . . . . . 4 - 19
Replacement . . . . . 4 - 20
Indirect Light Bulb . . . . . 4 - 21
Removal . . . . . 4 - 21
Replacement . . . . . 4 - 22
STAT Clock/Timer . . . . . 4 - 23
Removal . . . . . 4 - 23
Replacement . . . . . 4 - 24
Circuit Breaker . . . . . 4 - 25
Removal . . . . . 4 - 25
Replacement . . . . . 4 - 27
Moveable Gas Outlets . . . . . 4 - 28
Removal . . . . . 4 - 28
Replacement . . . . . 4 - 30

Chapter 5: Parts List

Warranty . . . . . 5 - 5
Service Parts Ordering . . . . . 5 - 7

Exchange Policy . . . . . 5 - 9
In-Warranty Exchanges . . . . . 5 - 9
Out-of-Warranty Exchanges . . . . . 5 - 9
Recommended Spare Parts . . . . . 5 - 10
Shop Drawings . . . . . 5 - 10
Label Set . . . . . 5 - 12
Three Foot Chase Frame Assembly, Level II Single Sided . . . . . 5 - 14
Three Foot Chase Frame Assembly, Level II Double Sided . . . . . 5 - 18
Three Foot Chase Frame Assembly, Level III Single Sided . . . . . 5 - 22
Three Foot Chase Frame Assembly, Level III Double Sided . . . . . 5 - 26
Four Foot Chase Frame Assembly, Level II Single Sided . . . . . 5 - 30
Four Foot Chase Frame Assembly, Level II Double Sided . . . . . 5 - 34
Four Foot Chase Frame Assembly, Level III Single Sided . . . . . 5 - 38
Four Foot Chase Frame Assembly, Level III Double Sided. . . . . 5 - 42
Three Foot Outrigger Frame Assembly, Level II Single and Double Sided . . . . 5 - 46
Three Foot Outrigger Frame Assembly, Level III Single and Double Sided . . . . 5 - 50
Four Foot Outrigger Frame Assembly, Level II Single and Double Sided . . . . . 5 - 54
Four Foot Outrigger Frame Assembly, Level III Single and Double Sided. . . . . 5 - 58
Three Foot Plain Frame Assembly, Level II Single and Double Sided . . . . . 5 - 62
Three Foot Plain Frame Assembly, Level III Single and Double Sided . . . . . 5 - 64
Four Foot Plain Frame Assembly, Level II Single and Double Sided . . . . . 5 - 66
Four Foot Plain Frame Assembly, Level III Single and Double Sided . . . . . 5 - 68
Three Foot Countertop Frame Assembly . . . . . 5 - 70
Four Foot Countertop Frame Assembly With Chase Extension. . . . . 5 - 72
Four Foot Countertop Frame Assembly . . . . . 5 - 76
Countertops . . . . . 5 - 78
Isolated Power Breaker Panel . . . . . 5 - 80
Gas Manifold Tree . . . . . 5 - 82
Gas Riser Tree . . . . . 5 - 86
Light Raceway Assembly . . . . . 5 - 88
Gas Raceway Assembly . . . . . 5 - 90

Hose Panel Assembly . . . . . 5 - 94
Ceiling Shroud Assembly, Single and Double Sided . . . . . 5 - 96
Monitor Shelf Assembly . . . . . 5 - 98
Monitor Shelf Without Light . . . . . 5 - 102
Three Foot Sound Baffle Assembly . . . . . 5 - 104
Four Foot Sound Baffle Assembly . . . . . 5 - 106
Top Shelf for Level II Frame Assemblies, Single and Double Sided. . . . . 5 - 108
Center Shelf for Level lll Frame Assemblies,
Single and Double Sided. . . . . 5 - 110
Top Shelf for Level III Frame Assemblies . . . . . 5 - 112
Down Lighting for Outrigger or Plain Frame Assemblies . . . . . 5 - 114
Down Lighting for Chase Frame Assemblies. . . . . 5 - 116
Indirect Lighting for Chase Frame Assemblies . . . . . 5 - 118
Duplex Outlet Receptacles . . . . . 5 - 120
Simplex and Hubbellock Outlet Receptacles . . . . . 5 - 122
Ground Receptacles . . . . . 5 - 124
Monitor Slide—P1007N2 . . . . . 5 - 126
Opthalmoscope Mount—P1020S1, P1020S2, P1020S4 . . . . . 5 - 128
Aneroid Sphygmomanometer—P978-01 and Mount—P102503,
Mercurial Sphygmomanometer—P977-01 and Mount—P102402 . . . . . 5 - 130
Cuff Basket—P102802 . . . . . 5 - 132
Bird Blender Mount, Extends Down—P1020B1 . . . . . 5 - 134
Bird Blender Mount, Extends Up—P1020NB1 . . . . . 5 - 136
Bottle Slide—P1020A1 and Extended Bottle Slide—P1020N1 . . . . . 5 - 138
Cable Organizer—P103602 . . . . . 5 - 140
Resuscitator Bag Holder—P102202. . . . . 5 - 142
STAT Clock, Pod Mounted—P101811 . . . . . 5 - 144
Utility Hook—P102602 . . . . . 5 - 146
Short Post Utility Mount—P972N01 . . . . . 5 - 148
Dual Post Utility Mount—P972D01. . . . . 5 - 150
ISS Support Arm—P976H01 and Transfer Pole—P158 . . . . . 5 - 152

IV Hanger—P971H00 . . . . . 5 - 154
Universal Holder . . . . . 5 - 156
Chart Holder—P102102 . . . . . 5 - 158
Waste Receptacle Assembly—P1017 . . . . . 5 - 160
Mobile Storage Cabinet—P101203B . . . . . 5 - 162
Storage Basket, Small—P1029S2 and Large—P1029L2 . . . . . 5 - 164
Utility Shelf—P101402 . . . . . 5 - 166
Arm Light Mount—P100801 . . . . . 5 - 168
Arm Lamp, Incandescent—P963C01 and Incandescent/Fluorescent—P963C02 . . . . . 5 - 170
Exam Plus® Mount—P100901 . . . . . 5 - 172
Exam Plus® Light—P965-01 . . . . . 5 - 174
Utility Light—P102702 . . . . . 5 - 178
Gas Outlet—Ohio . . . . . 5 - 180
Gas Outlet—Chemetron™ . . . . . 5 - 182
Gas Outlet—Puritan-Bennet™ . . . . . 5 - 184
Gas Outlet—Oxequip™ . . . . . 5 - 186
Gas Outlet—DISS . . . . . 5 - 188

Chapter 6: General Procedures

Cleaning and Care . . . . . 6 - 3
General Cleaning . . . . . 6 - 3
Steam Cleaning . . . . . 6 - 4
Hard to Clean Spots . . . . . 6 - 4
Accessories . . . . . 6 - 4
Disinfection . . . . . 6 - 4
Preventive Maintenance . . . . . 6 - 5
Preventive Maintenance Schedule . . . . . 6 - 6
Preventive Maintenance Checklist . . . . . 6 - 7
Tool and Supply Requirements . . . . . 6 - 8
Installation and Post Installation Inspection . . . . . 6 - 8

Chapter 7: Accessories

Accessories . . . . . 7 - 3
Monitor Slide . . . . . 7 - 4
Installation . . . . . 7 - 4
Opthalmoscope Mount, Extends Down . . . . . 7 - 6
Installation . . . . . 7 - 6
Opthalmoscope Mount, Extends Up . . . . . 7 - 7
Installation . . . . . 7 - 7
Aneroid Sphygmomanometer and Mount . . . . . 7 - 8
Installation . . . . . 7 - 8
Mercurial Sphygmomanometer and Mount . . . . . 7 - 9
Installation . . . . . 7 - 9
Cuff Basket . . . . . 7 - 10
Installation . . . . . 7 - 10
Bird Blender Mount, Extends Down . . . . . 7 - 11
Installation . . . . . 7 - 11
Bird Blender Mount, Extends Up . . . . . 7 - 12
Installation . . . . . 7 - 12
Bottle Slide and Extended Bottle Slide . . . . . 7 - 13
Installation . . . . . 7 - 13
Cable Organizer . . . . . 7 - 14
Installation . . . . . 7 - 14
Resuscitator Bag Holder . . . . . 7 - 15
Installation . . . . . 7 - 15
STAT Clock/Timer—Pod Mounted . . . . . 7 - 16
Installation . . . . . 7 - 16
Utility Hook . . . . . 7 - 18
Installation . . . . . 7 - 18
Short Post and Dual Post Utility Mount . . . . . 7 - 19
Installation . . . . . 7 - 19
ISS Support Arm and Transfer Pole . . . . . 7 - 21

Installation . . . . . 7 - 21
IV Hanger - for use with Bottle Slide P1020A1 . . . . . 7 - 23
Installation . . . . . 7 - 23
Universal Holder . . . . . 7 - 24
Installation . . . . . 7 - 24
Chart Holder . . . . . 7 - 25
Installation . . . . . 7 - 25
Waste Receptacle Assembly . . . . . 7 - 26
Installation . . . . . 7 - 26
Mobile Storage Cabinet . . . . . 7 - 27
Installation . . . . . 7 - 27
Large and Small Storage Basket . . . . . 7 - 29
Installation . . . . . 7 - 29
Utility Shelf . . . . . 7 - 31
Installation . . . . . 7 - 31
Arm Light Mount . . . . . 7 - 32
Installation . . . . . 7 - 32
Incandescent and Incandescent/Fluorescent Arm Lamp - for use with
Arm Light Mount P100801 . . . . . 7 - 33
Installation . . . . . 7 - 33
Exam Plus® Light Mount . . . . . 7 - 34
Installation . . . . . 7 - 34
Utility Light . . . . . 7 - 35
Installation . . . . . 7 - 35

1

Chapter 1 Introduction

Chapter Contents

Purpose . . . . . 1 - 3
Audience . . . . . 1 - 3
Organization . . . . . 1 - 3
Chapter 1: Introduction . . . . . 1 - 3
Chapter 2: Troubleshooting Procedures . . . . . 1 - 3
Chapter 3: Theory of Operation . . . . . 1 - 3
Chapter 4: Removal and Replacement Procedures . . . . . 1 - 3
Chapter 5: Parts List . . . . . 1 - 3
Chapter 6: General Procedures . . . . . 1 - 4
Chapter 7: Accessories . . . . . 1 - 4
Typographical Conventions . . . . . 1 - 5
Introduction . . . . . 1 - 6
Overview . . . . . 1 - 6
System Features . . . . . 1 - 7
Specifications . . . . . 1 - 8
Physical Description . . . . . 1 - 8
Electrical Description . . . . . 1 - 10
Regulations, Standards, and Codes . . . . . 1 - 12
UL Classification . . . . . 1 - 12
Neonatal Horizon® Headwall System . . . . . 1 - 12
Model Identification . . . . . 1 - 13
Safety Tips . . . . . 1 - 14
Warning and Caution Labels . . . . . 1 - 16

NOTES:

Purpose

This manual provides requirements for the Neonatal Horizon® Headwall System normal operation and maintenance. It also includes a parts list (Chapter 5) for ordering replacement components.

Audience

This manual is intended for use by only facility-authorized maintenance personnel. Failure to observe this restriction can result in severe injury to people and serious damage to equipment.

Organization

This manual contains seven chapters.

Chapter 1: Introduction

In addition to a brief description of this service manual, chapter 1 also provides a product overview.

Chapter 2: Troubleshooting Procedures

Repair analysis procedures are contained in this chapter. These procedures are used to gather information, identify the maintenance need, and verify the effectiveness of the repair.

Chapter 3: Theory of Operation

This chapter describes the application of the mechanical and electrical systems employed in this product.

Chapter 4: Removal and Replacement Procedures

Chapter 4 contains the detailed maintenance procedures determined necessary in chapter 2.

Chapter 5: Parts List

This chapter contains the warranty, part-ordering procedure, and illustrated parts lists.

Chapter 6: General Procedures

Cleaning, preventive maintenance, and other general procedures are described in this chapter.

Chapter 7: Accessories

A list of additional products, that can be used in conjunction with the Neonatal Horizon® Headwall System, is available in chapter 7. Installation procedures for these accessories are also included.

Typographical Conventions

This manual contains different typefaces and icons designed to improve readability and increase understanding of its content. Note the following examples:

- Standard text—used for regular information.
- **Boldface text**—emphasizes a word or phrase.
- **NOTE:**—sets apart special information or important instruction clarification.
- The symbol below highlights a WARNING or CAUTION:

Figure 1-1. Warning and Caution Symbol

  - A WARNING identifies situations or actions that may affect patient or user safety. Disregarding a warning could result in patient or user injury.
  - A CAUTION points out special procedures or precautions that personnel must follow to avoid equipment damage.

- The symbol below highlights an electrical shock hazard WARNING:

Figure 1-2. Electrical Shock Hazard Warning

Introduction

Overview

See figure 1-3 on page 1-6 for an overview of the Neonatal Horizon® Headwall System (level III framework shown).

Figure 1-3. Neonatal Horizon® Headwall System

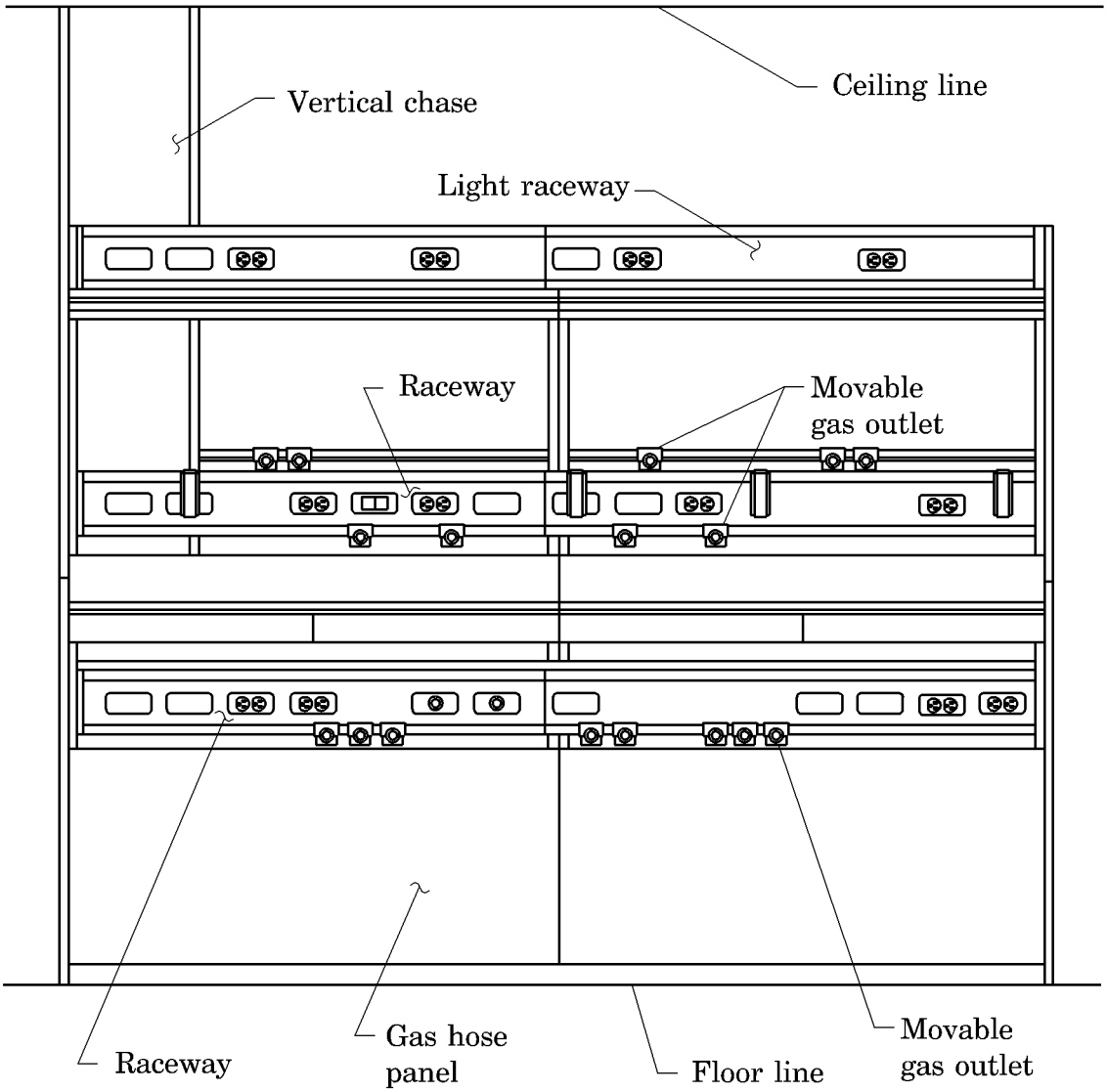

m238_001

The Neonatal Horizon® Headwall System is a modular headwall system that organizes medical services in neonatal care areas to create a safer, more efficient environment. As a system, it provides a network of features that work in concert with auxiliary equipment and accessories to enhance productivity and quality of care.

The Neonatal Horizon® Headwall System consists of a tubular steel support framework adaptable to perimeter, island, or peninsular configurations. This framework provides the means for mounting the vertical service chase, medical gas system, horizontal raceways, countertop and storage modules. The pre-wired vertical service chase provides electrical power and gas services from the ceiling to the horizontal raceways. The raceways carry power lines and support auxiliary equipment. The area under the raceways contains the piping for the medical gases.

System Features

The Neonatal Horizon® Headwall System represents the latest headwall technology available. This easily installed system offers:

- Low voltage, normal and critical branch service
- Multiple variable gas outlets located at three different levels
- Maximization of available floor space
- Clean, uncluttered environment with continuous shelf space
- Flexibility to upgrade easily to a more sophisticated level of care
- Allowance for new services without having to break into existing room architecture

Specifications

Physical Description

See table 1-1 on page 1-8 through table 1-8 on page 1-12 for Neonatal Horizon® Headwall System specifications.

Table 1-1. Framework Module Specifications

Feature	Dimension
Level II Framework	
Depth	11" (28 cm)
Width	36" (91 cm) or 48" (122 cm)
Height	52" (132 cm)
Level III Framework	
Depth	11" (28 cm)
Width	36" (91 cm) or 48" (122 cm)
Height	52" (132 cm)

Table 1-2. Vertical Service Chase Specifications

Feature	Dimension
Depth	3" (8 cm)
Width	9" (23 cm)
Height	Adjustable to height of ceiling

Table 1-3. Raceway Specifications (to left or right of service chase)

Feature	Dimension
Depth	2 9/16" (6.51 cm)
Length	36", 48", 60", 84", 96", and 108", variable up to 336" (91 cm, 122 cm, 152 cm, 213 cm, 244 cm, and 274 cm, variable up to 853 cm)
Height	6 1/2" (16.51 cm)
Panel thickness	3/4" (19.05 mm)

Table 1-4. Shelving Specifications

Feature	Dimension
Countertop	
Depth	18" (46 cm) or 24" (61 cm)
Length	36" (91 cm) or 48" (122 cm) or 84" (213 cm) or 96" (244 cm)
Mounting height	38" (97 cm) above floor
Utility Shelf	
Depth	11" (28 cm)
Length	36" (91 cm) or 48" (122 cm) or 84" (213 cm) or 96" (244 cm)

Table 1-5. Medical Gas/Vacuum Manifold Specifications

Description	Specification
Check valves	DISS indexed
Copper tubing	Type K, ASTMB88, ASTMB819
Inner diameter of tubing: Oxygen and air Vacuum	 1/2" (12.7 mm) 3/4" (19.1 mm)
Brazing: Material Minimum melting point	 Silver alloy 1000°F (538°C)
Pressure test	150 psi (1034 kPa)
Pressure test certification	NFPA-99 and/or contractual documents

Electrical Description

Table 1-6. Electrical Specifications

Description	Specification
Voltage	109-125V AC at 50-60 Hz
Phases	1 and 3
Wire — standard and critical branch	Type AWT/MTW Stranded copper 600V Flame retardant Heat resistant
Wire — power circuits/lighting circuits	12 AWG, color coded per wiring diagram
Wire — ground conductor	12 AWG, stranded copper, green
Wire — raceway ground conductor	10 AWG to terminate at service chase ground bus
Grounding and bonding	Each receptacle must have a grounding conductor terminated at the raceway grounding post next to the service chase.

Table 1-7. Receptacle Specifications

Description	Specification
Single receptacle	Hospital grade, NEMA 5-15R or 5-20R, 125V AC, 15 or 20 amp, ivory = standard power, red = critical branch
Duplex receptacle	Hospital grade, NEMA 5-15R or 5-20R, 125V AC, 15 or 20 amp, ivory = standard power, red = critical branch
Locking receptacle	Single type, Hubbellock® 2300 HG, 125V AC, 20 amp, black
Grounding receptacle	Hampden SLR-3S, ground conductor: 10 AWG, stranded copper, green

Table 1-8. Optional Equipment and Devices Specifications

Description	Specification
Chart light	Switched 7 Watt 120V bulb
Night light	Switched (SPST or 3-way or continuous burn) 7 Watt 120V bulb
Telephone	Single gang opening. Contractor provides telephone jack, wiring, and faceplate punching.
TeleMate provision	Standard telephone jack
Code blue emergency call button	Contractor provides name and number of code blue equipment to be used.
Nurse call station	2 to 8 gang opening. Contractor provides name and number of equipment to be used.
STAT clock/timer (P967B) provision	Light neutral housing with tilt and swivel extension arm. 9½" (24.13 cm) wide 4¾" (12.06 cm) high 4½" (11.43 cm) deep

Regulations, Standards, and Codes

UL Classification

Neonatal Horizon® Headwall System

Section and units UL category = QQXX

Isolated power wall modules UL category = KEXS

Model Identification

See table 1-9 on page 1-13 for Neonatal Horizon® Headwall System model identification.

Table 1-9. Model Identification

Model Number	Description
P1001	Neonatal Horizon® Headwall System

Safety Tips

WARNING:
Only facility-authorized maintenance personnel should troubleshoot the Neonatal Horizon® Headwall System. Troubleshooting by unauthorized personnel could result in personal injury or equipment damage.

WARNING:
Only facility-authorized maintenance personnel should perform preventive maintenance on the Neonatal Horizon® Headwall System. Preventive maintenance performed by unauthorized personnel could result in personal injury or equipment damage.

WARNING:
Adhere to the “Infection Control Policies and Procedures” outlined in the *Safety Coordinator Reference Guide*. Failure to do so could result in the spread of infection.

WARNING:
Follow the product manufacturer’s instructions. Failure to do so could result in personal injury or equipment damage.

SHOCK HAZARD:
To minimize the risk of electrical shock or damage to equipment, disconnect all electrical power to the system before working on it. Failure to do so could result in personal injury or equipment damage.

SHOCK HAZARD:
Use care when checking live voltages. Do not touch live terminals, wires, and ground. Failure to use caution will cause serious electrical shock injury.

SHOCK HAZARD:
Do not expose the unit to excessive moisture. Personal injury or equipment damage could occur.

CAUTION:
Do not use harsh cleaners, solvents, or detergents. Equipment damage could occur.

Warning and Caution Labels

Figure 1-4. Warning and Caution Labels

m238_017

Chapter 2
Troubleshooting Procedures

2

Chapter Contents

Getting Started . . . . . 2 - 3
Initial Actions . . . . . 2 - 3
Function Checks . . . . . 2 - 4
Final Actions . . . . . 2 - 5
Circuit Breaker Is Inoperative . . . . . 2 - 6
Standard or Critical Branch Electrical Receptacle Is Inoperative . . . . . 2 - 9
Down Light Does Not Come On . . . . . 2 - 10
Indirect Light Does Not Come On . . . . . 2 - 11
Night Light Does Not Come On . . . . . 2 - 12
Chart Light Does Not Come On . . . . . 2 - 13
Dimmer Switch Will Not Operate the Light . . . . . 2 - 15
Timed Light Switch or Toggle Switch Does Not Operate Properly . . . . . 2 - 16
STAT Clock/Timer Will Not Operate . . . . . 2 - 18

NOTES:

Getting Started

WARNING:
Only facility-authorized maintenance personnel should troubleshoot the Neonatal Horizon® Headwall System. Troubleshooting by unauthorized personnel could result in personal injury or equipment damage.

Begin each procedure in this chapter with step 1. Follow the sequence outlined (each step assumes the previous step has been completed). In each step, the normal operation of the product can be confirmed by answering **Yes** or **No** to the statement. Your response will lead to another step in the procedure, a repair analysis procedure (RAP), or a component replacement. If more than one component is listed, replace them in the given order.

Start with **Initial Actions** to begin gathering information about the problem.

Perform the **Function Checks** to isolate or identify a problem and to verify the repair after completing each corrective action (replacing or adjusting a part, seating a connector, etc.).

Perform the **Final Actions** after the Function Checks to verify the repair.

If troubleshooting procedures do not isolate the problem, call Hill-Rom Technical Support at (800) 445-3720 for assistance.

Initial Actions

Use Initial Actions to gather information from operators concerning problems with the Neonatal Horizon® Headwall System. Note symptoms or other information concerning the problem that the operator describes. This information helps identify the probable cause.

1. Someone who can explain the problem is available.

   Yes **No**
   ↓ → Go to “Function Checks” on page 2-4.

2. Ask that person to demonstrate or explain the problem. The problem can be duplicated.

   Yes **No**
   ↓ → Go to “Function Checks” on page 2-4.

3. The problem is a result of improper operator action.

   Yes **No**
   ↓ → Go to "Function Checks" on page 2-4.

4. Instruct the operator to refer to the procedures in the *Neonatal Horizon® Headwall System User Manual*. Perform the "Function Checks" on page 2-4 to ensure proper operation of the Neonatal Horizon® Headwall System.

Function Checks

1. Initial Actions have been performed.

   Yes **No**
   ↓ → Go to "Initial Actions" on page 2-3.

2. Power is applied to the Neonatal Horizon® Headwall System.

   Yes **No**
   ↓ → Check the building circuit breaker panel, and ensure that the applicable circuit breaker is in the ON position.

3. The Neonatal Horizon® Headwall System circuit breaker is operative.

   Yes **No**
   ↓ → Go to RAP 2.1.

4. The standard or critical branch electrical receptacle is operational.

   Yes **No**
   ↓ → Go to RAP 2.2.

5. The down light is operational.

   Yes **No**
   ↓ → Go to RAP 2.3.

6. The indirect light is operational.

   Yes **No**
   ↓ → Go to RAP 2.4.

7. The night light is operational.

   Yes **No**
   ↓ → Go to RAP 2.5.

8. The chart light is operational.

   Yes **No**
   ↓ → Go to RAP 2.6.

9. The dimmer switch is operational.

   Yes **No**
   ↓ → Go to RAP 2.7.

10. The timed light switch or toggle switch operates correctly.

    Yes **No**
    ↓ → Go to RAP 2.8.

11. The STAT Clock/Timer operates correctly.

    Yes **No**
    ↓ → Go to RAP 2.9.

12. Auxiliary hospital equipment is plugged into an appropriate power source, and the switch is turned on.

    Yes **No**
    ↓ → Plug the equipment into an appropriate power source, and turn on the switch.

13. Go to "Final Actions" on page 2-5.

Final Actions

1. Complete the required preventive maintenance procedures. See "Preventive Maintenance Checklist" on page 6-7.

2. Complete all required administration tasks.

2.1 Circuit Breaker Is Inoperative

1. The involved building circuit breaker (A) is in the ON position (see figure 2-1 on page 2-6).

   Yes **No**
   ↓ → Reset the circuit breaker (A) to the ON position.

Figure 2-1. Standard or Critical Branch Building Circuit Breaker

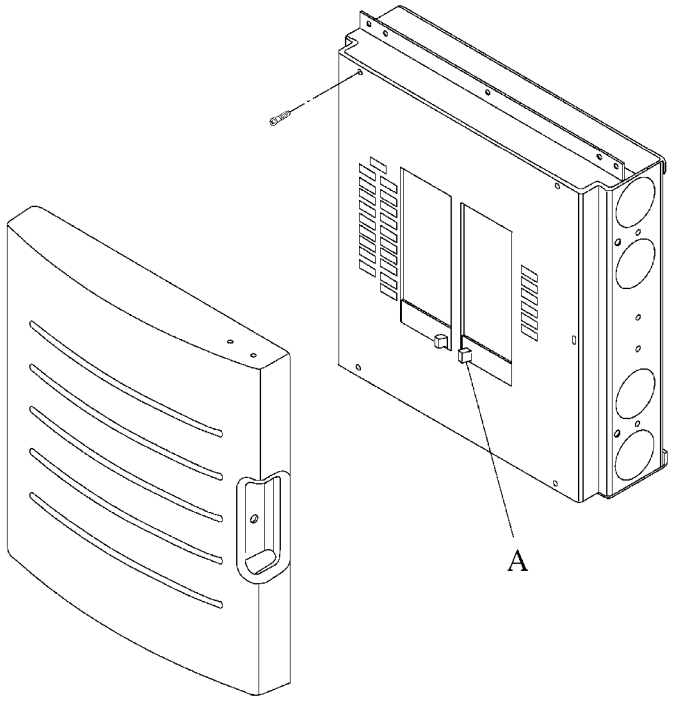

m238_097

2. The Neonatal Horizon® Headwall System circuit breaker (B) is in the ON position (see figure 2-2 on page 2-7).

   Yes **No**
   ↓ → Reset the circuit breaker (B) to the ON position.

2

Figure 2-2. Neonatal Horizon® Headwall System Circuit Breaker

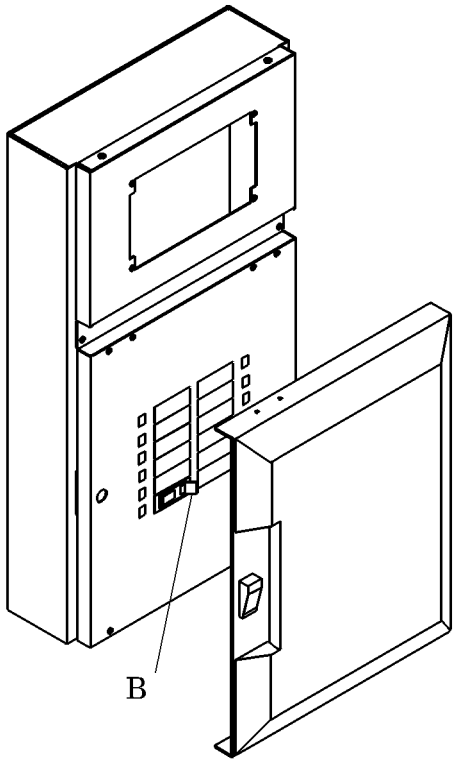

m238_098

3. The headwall system circuit breaker (B) is operative.

   Yes **No**
   ↓ → Go to step 5.

4. Go to "Final Actions" on page 2-5.

SHOCK HAZARD:
To minimize the risk of electrical shock or damage to the equipment, disconnect all electrical power to the system before working on it. Failure to do so could result in personal injury or equipment damage.

5. Perform the following:
   a. Locate the involved building standard/critical branch circuit breaker panel.
   b. Set the involved circuit breaker (A) to OFF (see figure 2-1 on page 2-6).
   c. Lock out and tag the breaker.

d. Continuity exists in the wiring between the headwall system circuit breaker and the related equipment.

Yes **No**
↓ → Repair or replace the wires from the headwall system circuit breaker to the related equipment.

6. Check for continuity in the headwall system circuit breaker as follows:
   a. Set the involved headwall system circuit breaker to the OFF position.
   b. Remove the headwall system circuit breaker. See “Circuit Breaker” on page 4-25.
   c. Continuity exists between the lug and the headwall system circuit breaker terminal.

Yes **No**
↓ → Replace the headwall system circuit breaker with a new circuit breaker.

7. Go to “Final Actions” on page 2-5.

2.2 Standard or Critical Branch Electrical Receptacle Is Inoperative

SHOCK HAZARD:
Use care when checking live voltages. Do not touch live terminals, wires, and ground. Failure to use caution will cause serious electrical shock injury.

1. A voltage reading of 120V AC is available between the lug and the building circuit breaker terminal.

   Yes **No**
   ↓ → Replace the building circuit breaker (A) per the manufacturer's instruction (see figure 2-1 on page 2-6).

2. The headwall system circuit breaker (B) is in the ON position (see figure 2-2 on page 2-7).

   Yes **No**
   ↓ → Reset the headwall system circuit breaker to the ON position.

3. A voltage reading of either 120V AC is available between the lug and the headwall system breaker terminal.

   Yes **No**
   ↓ → Replace the headwall system circuit breaker. See "Circuit Breaker" on page 4-25.

4. A voltage reading of 120V AC is available at the wire terminals on the receptacle.

   Yes **No**
   ↓ → Repair or replace the wiring between the headwall system circuit breaker and the receptacle.

5. The voltage reads 120V AC between the receptacle's short slot and the ground terminal. Also, the voltage reads 120V AC between the receptacle's short slot and the long slot.

   Yes **No**
   ↓ → Replace the electrical receptacle. See "Electrical Receptacle" on page 4-3.

6. Go to "Final Actions" on page 2-5.

2.3 Down Light Does Not Come On

SHOCK HAZARD:
Use care when checking live voltages. Do not touch live terminals, wires, and ground. Failure to use caution will cause serious electrical shock injury.

1. The down light malfunctions after the bulbs are replaced. See "Down Light Bulb" on page 4-19.

   Yes **No**
   ↓ → Go to "Final Actions" on page 2-5.

2. A voltage reading of 120V AC is available between the lug and the building circuit breaker terminal.

   Yes **No**
   ↓ → Replace the building circuit breaker (A) per the manufacturer's instruction (see figure 2-1 on page 2-6).

3. The headwall system circuit breaker (B) is in the ON position (see figure 2-2 on page 2-7).

   Yes **No**
   ↓ → Reset the headwall system circuit breaker to the ON position.

4. A voltage reading of 120V AC is available between the lug and the headwall system breaker terminal.

   Yes **No**
   ↓ → Replace the headwall system circuit breaker (see "Circuit Breaker" on page 4-25).

5. A voltage reading of 120V AC is available at the wire terminals on the down light.

   Yes **No**
   ↓ → Repair or replace the wiring between the headwall system circuit breaker and the down light.

6. Go to "Final Actions" on page 2-5.

2.4 Indirect Light Does Not Come On

SHOCK HAZARD:
Use care when checking live voltages. Do not touch live terminals, wires, and ground. Failure to use caution will cause serious electrical shock injury.

1. The indirect light malfunctions after the bulbs are replaced. See “Indirect Light Bulb” on page 4-21.

   Yes **No**
   ↓ → Go to “Final Actions” on page 2-5.

2. A voltage reading of 120V AC is available between the lug and the building circuit breaker terminal.

   Yes **No**
   ↓ → Replace the building circuit breaker (A) per the manufacturer’s instruction (see figure 2-1 on page 2-6).

3. The headwall system circuit breaker (B) is in the ON position (see figure 2-2 on page 2-7).

   Yes **No**
   ↓ → Reset the headwall system circuit breaker to the ON position.

4. A voltage reading of 120V AC is available between the lug and the headwall system breaker terminal.

   Yes **No**
   ↓ → Replace the headwall system circuit breaker. See “Circuit Breaker” on page 4-25.

5. A voltage reading of 120V AC is available at the wire terminals on the indirect light.

   Yes **No**
   ↓ → Repair or replace the wiring between the headwall system circuit breaker and the indirect light.

6. Go to “Final Actions” on page 2-5.

2.5 Night Light Does Not Come On

SHOCK HAZARD:
Use care when checking live voltages. Do not touch live terminals, wires, and ground. Failure to use caution will cause serious electrical shock injury.

1. The night light malfunctions after the bulb is replaced. See "Chart Light or Night Light Bulb" on page 4-17.

   Yes **No**
   ↓ → Go to "Final Actions" on page 2-5.

2. A voltage reading of 120V AC is available between the lug and the building circuit breaker terminal.

   Yes **No**
   ↓ → Replace the building circuit breaker (A) per the manufacturer's instruction (see figure 2-1 on page 2-6).

3. The headwall system circuit breaker (B) is in the ON position (see figure 2-2 on page 2-7).

   Yes **No**
   ↓ → Reset the headwall system circuit breaker to the ON position.

4. A voltage reading of 120V AC is available between the lug and the headwall system breaker terminal.

   Yes **No**
   ↓ → Replace the headwall system circuit breaker. See "Circuit Breaker" on page 4-25.

5. A voltage reading of 120V AC is available at the wire terminals on the night light.

   Yes **No**
   ↓ → Repair or replace the wiring between the headwall system circuit breaker and the night light.

6. Go to "Final Actions" on page 2-5.

2.6 Chart Light Does Not Come On

SHOCK HAZARD:
Use care when checking live voltages. Do not touch live terminals, wires, and ground. Failure to use caution will cause serious electrical shock injury.

1. The chart light malfunctions after the bulb is replaced. See “Chart Light or Night Light Bulb” on page 4-17.

   Yes **No**
   ↓ → Go to “Final Actions” on page 2-5.

2. A voltage reading of 120V AC is available between the lug and the building circuit breaker terminal.

   Yes **No**
   ↓ → Replace the building circuit breaker (A) per the manufacturer’s instruction (see figure 2-1 on page 2-6).

3. The headwall system circuit breaker (B) is in the ON position (see figure 2-2 on page 2-7).

   Yes **No**
   ↓ → Reset the headwall system circuit breaker to the ON position.

4. A voltage reading of 120V AC is available between the lug and the headwall system breaker terminal.

   Yes **No**
   ↓ → Replace the headwall system circuit breaker. See “Circuit Breaker” on page 4-25.

5. A voltage reading of 120V AC is available at the wire terminals on the chart light switch.

   Yes **No**
   ↓ → Repair or replace the wiring between the headwall system circuit breaker and the chart light switch.

6. Continuity in the chart light switch is present when checked as follows:

   a. Set the involved headwall system breaker to the OFF position.

   b. Remove the chart light switch from the headwall system. See “Chart Light or Night Light Switch” on page 4-15.

   c. Disconnect the wires.

d. The ohmmeter reads continuity between the chart light switch and the terminals.

Yes **No**
↓ → Replace the chart light switch. See “Chart Light or Night Light Switch” on page 4-15.

7. Go to “Final Actions” on page 2-5.

2.7 Dimmer Switch Will Not Operate the Light

SHOCK HAZARD:
Use care when checking live voltages. Do not touch live terminals, wires, and ground. Failure to use caution will cause serious electrical shock injury.

1. A voltage reading of 120V AC is available between the lug and the building circuit breaker terminal.

   Yes **No**
   ↓ → Replace the building circuit breaker (A) per the manufacturer's instruction (see figure 2-1 on page 2-6).

2. The headwall system circuit breaker (B) is in the ON position (see figure 2-2 on page 2-7).

   Yes **No**
   ↓ → Reset the headwall system circuit breaker to the ON position.

3. A voltage reading of 120V AC is available between the lug and the headwall system breaker terminal.

   Yes **No**
   ↓ → Replace the headwall system circuit breaker. See "Circuit Breaker" on page 4-25.

4. A voltage reading of 120V AC is available at the wire terminals on the dimmer switch.

   Yes **No**
   ↓ → Repair or replace the wiring between the headwall system circuit breaker and the dimmer switch.

5. Rotate the dimmer switch to the full clockwise position and back to a full counterclockwise position. The light brightens, then dims.

   Yes **No**
   ↓ → Replace the applicable light bulb.

6. The light is fully functional from dim to bright.

   Yes **No**
   ↓ → Replace the dimmer switch. See "Dimmer Switch" on page 4-10.

7. Go to "Final Actions" on page 2-5.

2.8 Timed Light Switch or Toggle Switch Does Not Operate Properly

SHOCK HAZARD:
Use care when checking live voltages. Do not touch live terminals, wires, and ground. Failure to use caution will cause serious electrical shock injury.

1. A voltage reading of 120V AC is available between the lug and the building circuit breaker terminal.

   Yes ↓ **No** → Replace the building circuit breaker (A) per the manufacturer's instruction (see figure 2-1 on page 2-6).

2. The headwall system circuit breaker (B) is in the ON position (see figure 2-2 on page 2-7).

   Yes ↓ **No** → Reset the headwall system circuit breaker to the ON position.

3. A voltage reading of 120V AC is available between the lug and the headwall system breaker terminal.

   Yes ↓ **No** → Replace the headwall system circuit breaker. See "Circuit Breaker" on page 4-25.

4. A voltage reading of 120V AC is available at the wire terminals on the toggle switch.

   Yes ↓ **No** → Repair or replace the wiring between the headwall system circuit breaker and the toggle switch.

5. Place the toggle switch in the ON position. The lights turn ON.

   Yes ↓ **No** → Replace the applicable light bulb.

6. The light is operational.

   Yes ↓ **No** → Replace the toggle switch. See "Timed Light Switch and Toggle Switch" on page 4-12.

7. Place the toggle switch in the OFF position. The lights turn OFF at the setting of the timer (0-15 minutes).

   Yes **No**
   ↓ → Adjust the timer to the correct setting. See "STAT Clock/Timer" on page 4-23.

8. The light turns off at the correct time.

   Yes **No**
   ↓ → Replace the timer assembly. See "Timed Light Switch and Toggle Switch" on page 4-12.

9. Go to "Final Actions" on page 2-5.

2.9 STAT Clock/Timer Will Not Operate

SHOCK HAZARD:
Use care when checking live voltages. Do not touch live terminals, wires, and ground. Failure to use caution will cause serious electrical shock injury.

1. The self diagnostic test for the STAT Clock/Timer indicates no faults.

   Yes **No**
   ↓ → Remove the defective unit, See "STAT Clock/Timer" on page 4-23, and return it to Hill-Rom.

2. A voltage reading of 120V AC is available between the lug and the building circuit breaker terminal.

   Yes **No**
   ↓ → Replace the building circuit breaker (A) per the manufacturer's instruction (see figure 2-1 on page 2-6).

3. The headwall system circuit breaker (B) is in the ON position (see figure 2-2 on page 2-7).

   Yes **No**
   ↓ → Reset the headwall system circuit breaker to the ON position.

4. A voltage reading of 120V AC is available between the lug and the headwall system breaker terminal.

   Yes **No**
   ↓ → Replace the headwall system circuit breaker. See "Circuit Breaker" on page 4-25.

5. Check the STAT Clock/Timer fuse as follows:

   a. The STAT Clock/Timer (P967-00) (black faced) fuse is located on the front of the unit.

   b. The STAT Clock/Timer (P967B00) (white faced) fuse is located inside the unit.

   - Remove the STAT Clock/Timer from the headwall system. See "STAT Clock/Timer" on page 4-23.
   - Remove the screws from the back of the STAT Clock/Timer.

c. Check that the fuse is operational.

Yes **No**
↓ → Replace the fuse. For STAT Clock/Timer (P967-00, black faced) use a 1/4 A, 250 volt, 1/4" x 1 1/4" (0.63 x 3.17 cm), delayed fuse. For STAT Clock/Timer (P967B00, white faced) use a 1/4 A, 250 volt, 3/16" x 3/4" (0.47 x 1.90 cm), slo-blo fuse.

6. A voltage reading of 120V AC is available at the STAT Clock/Timer plug.

Yes **No**
↓ → Repair or replace the wiring between the STAT Clock/Timer plug and the electrical outlet.

7. The STAT Clock/Timer is operative.

Yes **No**
↓ → Remove and replace the STAT Clock/Timer. See “STAT Clock/Timer” on page 4-23.

8. Go to “Final Actions” on page 2-5.

NOTES:

Chapter 3
Theory of Operation

Chapter Contents

Electrical System . . . . . 3 - 3
Electrical Switches . . . . . 3 - 5
Power Receptacles . . . . . 3 - 6
Theory of Operation . . . . . 3 - 8
- Service Chase . . . . . 3 - 8
- Raceways . . . . . 3 - 8
- Medical Gas System . . . . . 3 - 8
- Standard Power . . . . . 3 - 8
- Critical Branch Power . . . . . 3 - 8
- Communications/Low Voltage . . . . . 3 - 9

3

NOTES:

Electrical System

Figure 3-1. AC Voltage Distribution to Breaker Panels

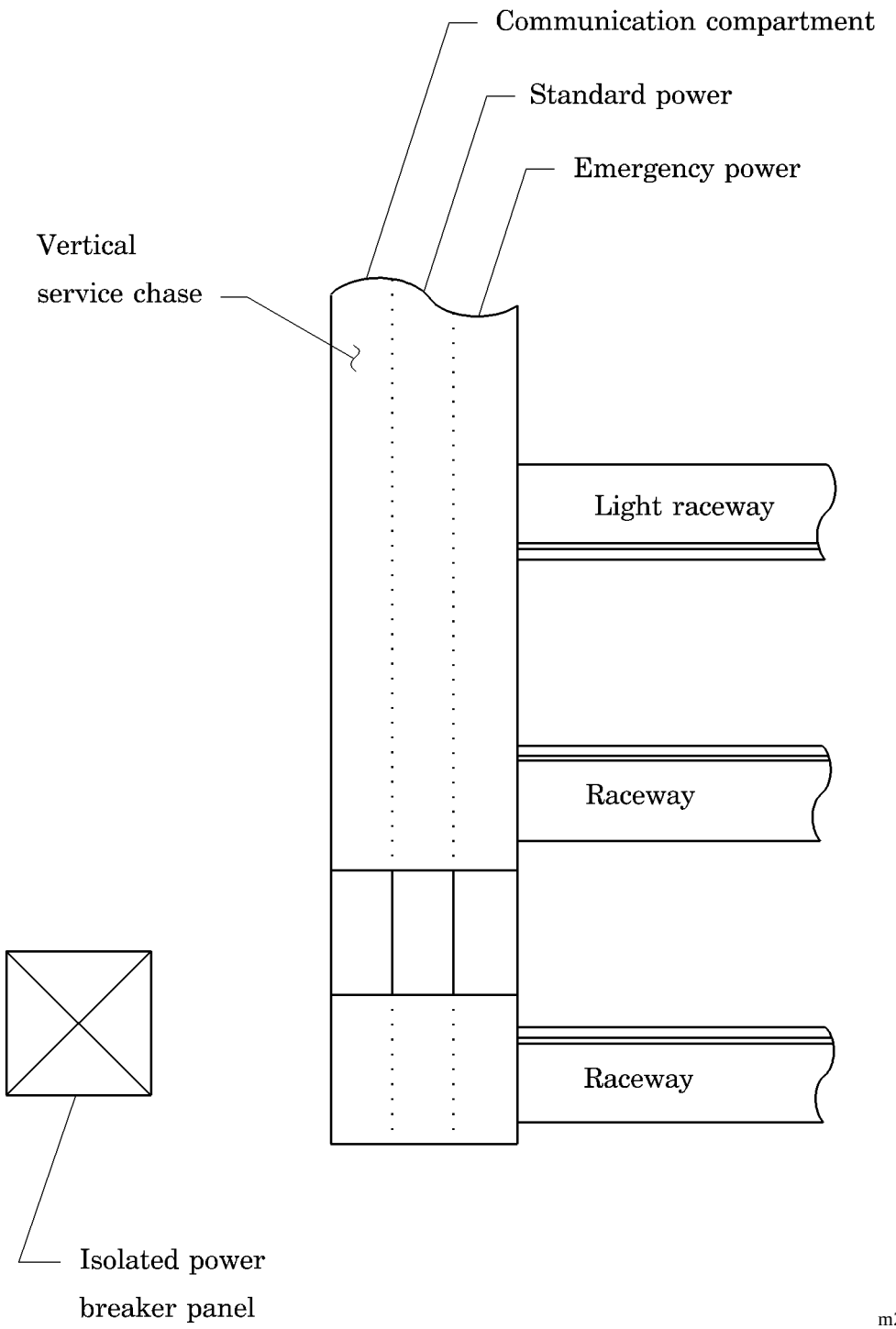

Figure 3-2. AC Voltage Distribution to Raceways

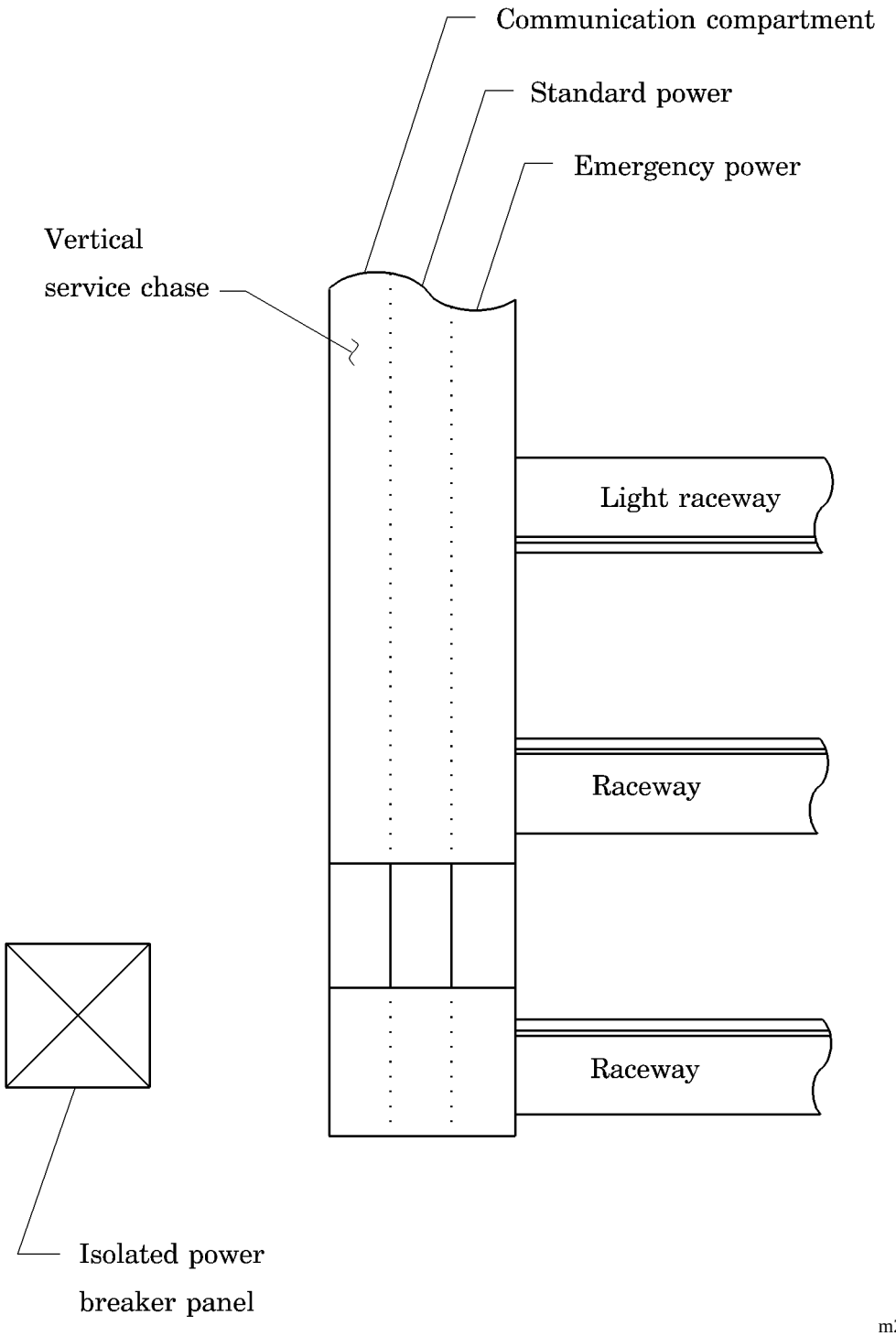

Electrical Switches

Figure 3-3. Typical Electrical Switch Wiring Diagrams

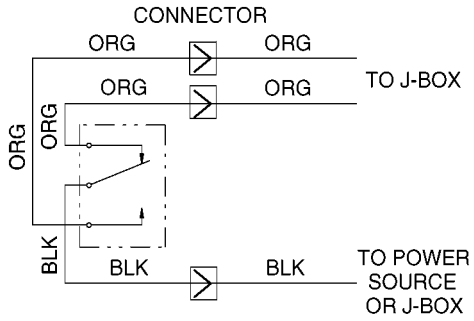

Typical ground power
single 3-way
horizon

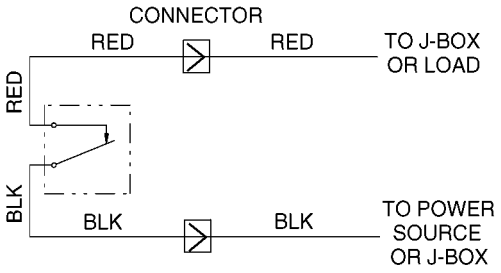

Typical ground power
single SPST

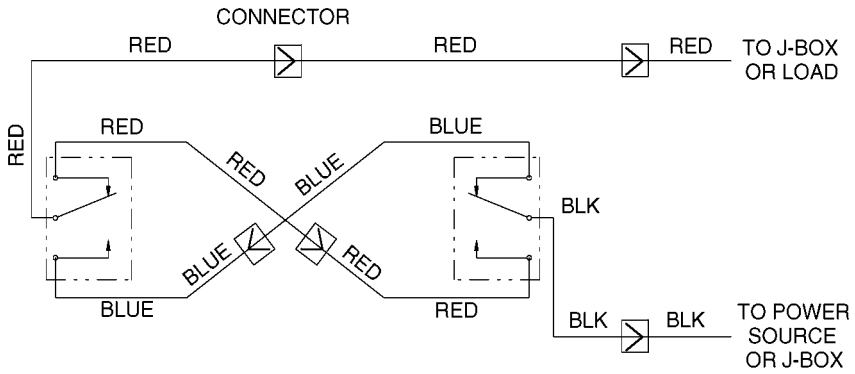

Typical ground power
two 3-way
horizon

m238_004

Power Receptacles

Figure 3-4. Typical Grounded Power Receptacle Wiring Diagrams

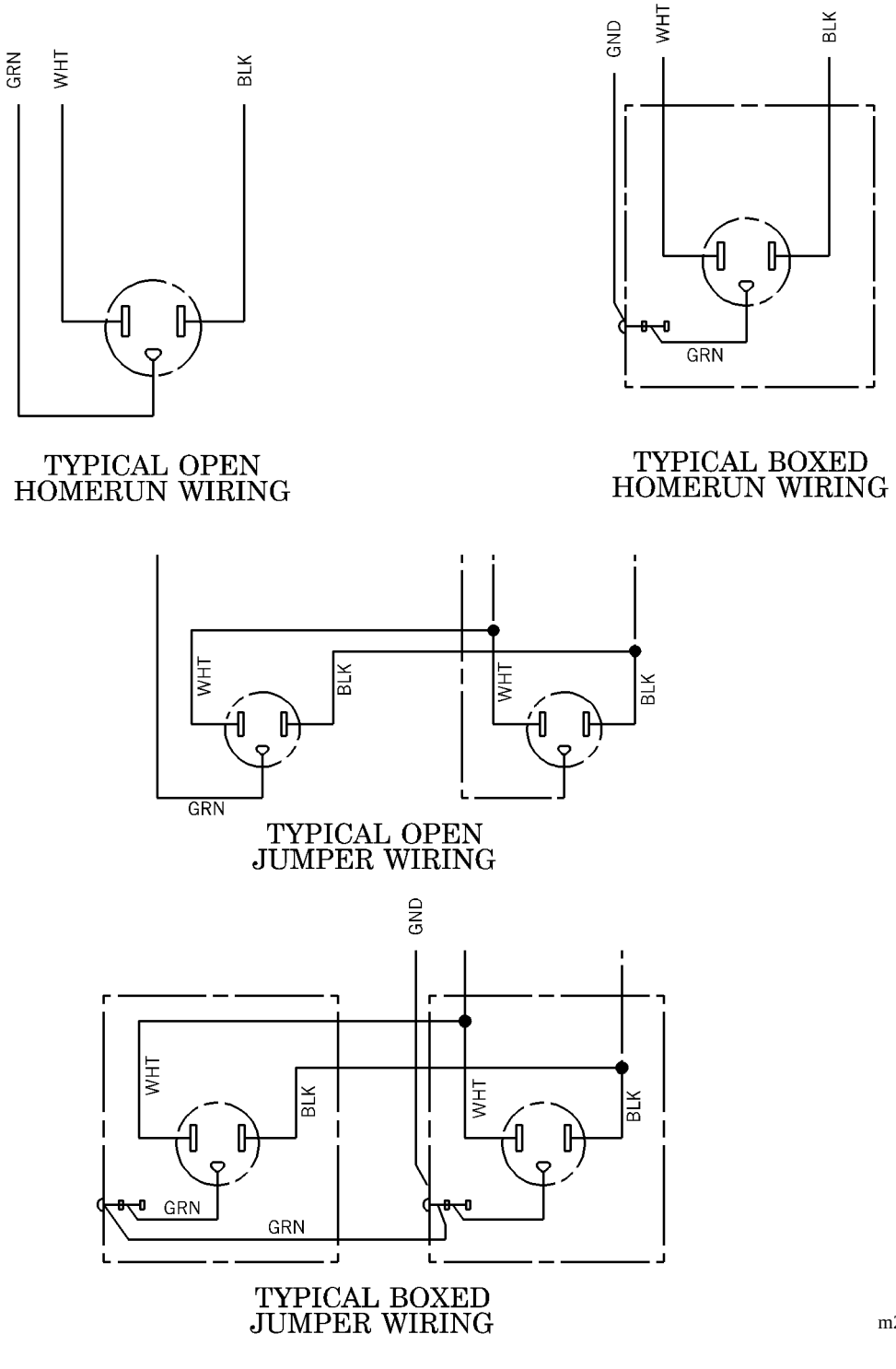

Figure 3-5. Typical Isolated Power Receptacle Wiring Diagrams

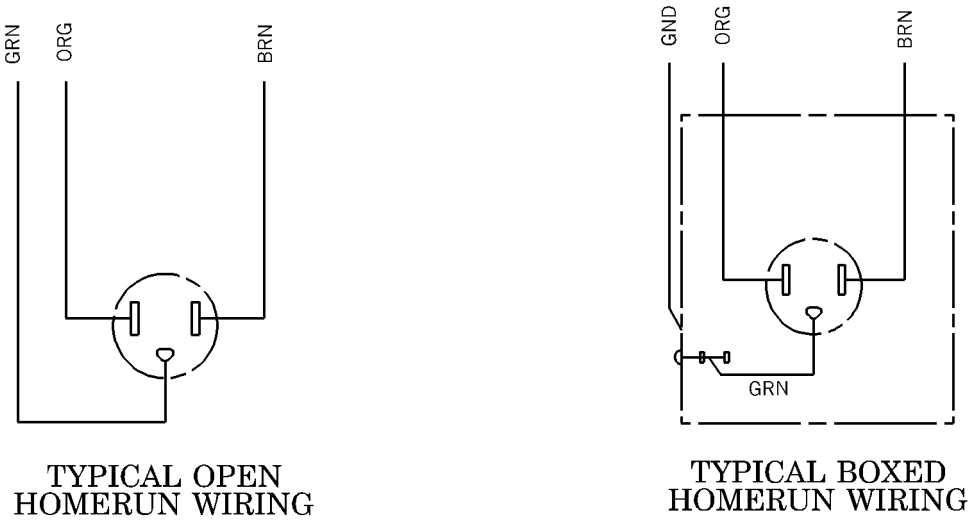

m238_006

Theory of Operation

Tubular steel support framework modules provide the means for mounting the vertical service chase, horizontal raceways, medical gas system, countertop, and storage modules.

Service Chase

The vertical service chase carries standard power, critical branch power, communications cabling, and medical gases from the ceiling to the horizontal raceways. The chase barriers standard, low voltage, and critical branch power.

Raceways

The Neonatal Horizon® Headwall System is available with two (level II) or three (level III) horizontal raceways. The main body of the raceway provides barriered wiring for any mix of standard, low voltage, and critical branch power services. The horizontal raceways also provide for mounting and horizontal movement of medical gas outlets, secondary equipment, and accessories.

Medical Gas System

The medical gas system is comprised of a pre-plumbed gas service manifold, movable gas outlets attached to the manifold with flexible hoses, and removable hose panels. Copper tubing for the manifold will be 1/2" (12.7 mm) inside diameter for oxygen and air, and 3/4" (19.1 mm) inside diameter for vacuum. Gas block placement is available at three levels. Hose assemblies have gas specific DISS fittings. Hose panels may be removed for housekeeping or to add or remove gas outlets.

Standard Power

Standard power is available to all raceways through a standard power circuit breaker box. Ivory receptacles are used for standard power outlets.

Critical Branch Power

Critical branch power is available to all raceways through an critical branch power circuit breaker box. Red receptacles are used for critical branch power outlets.

Communications/Low Voltage

Communications are carried by low voltage.

NOTES:

Chapter 4
Removal and Replacement Procedures

Chapter Contents

Electrical Receptacle . . . . . 4 - 3
Removal . . . . . 4 - 3
Replacement . . . . . 4 - 6
Ground Receptacle . . . . . 4 - 7
Removal . . . . . 4 - 7
Replacement . . . . . 4 - 9
Dimmer Switch . . . . . 4 - 10
Removal . . . . . 4 - 10
Replacement . . . . . 4 - 11
Timed Light Switch and Toggle Switch . . . . . 4 - 12
Removal . . . . . 4 - 12
Replacement . . . . . 4 - 13
Adjustment . . . . . 4 - 14
Chart Light or Night Light Switch . . . . . 4 - 15
Removal . . . . . 4 - 15
Replacement . . . . . 4 - 16
Chart Light or Night Light Bulb . . . . . 4 - 17
Removal . . . . . 4 - 17
Replacement . . . . . 4 - 18
Down Light Bulb . . . . . 4 - 19
Removal . . . . . 4 - 19

Replacement . . . . . 4 - 20
Indirect Light Bulb . . . . . 4 - 21
Removal . . . . . 4 - 21
Replacement . . . . . 4 - 22
STAT Clock/Timer . . . . . 4 - 23
Removal . . . . . 4 - 23
Replacement . . . . . 4 - 24
Circuit Breaker . . . . . 4 - 25
Removal . . . . . 4 - 25
Replacement . . . . . 4 - 27
Moveable Gas Outlets . . . . . 4 - 28
Removal . . . . . 4 - 28
Replacement . . . . . 4 - 30

4.1 Electrical Receptacle

Tools required: Screwdriver
Phillips head screwdriver

NOTE:
The following procedures apply to standard and critical branch, simplex, and duplex electrical outlets.

Removal

SHOCK HAZARD:
To minimize the risk of electrical shock or damage to equipment, disconnect all power to the system before working on it. Failure to do so could result in personal injury or equipment damage.

1. Perform the following:
   a. Locate the involved building standard/critical branch circuit breaker panel.
   b. Set the involved circuit breaker (A) to OFF (see figure 4-1 on page 4-3).

Figure 4-1. Standard or Critical Branch Circuit Breaker Box

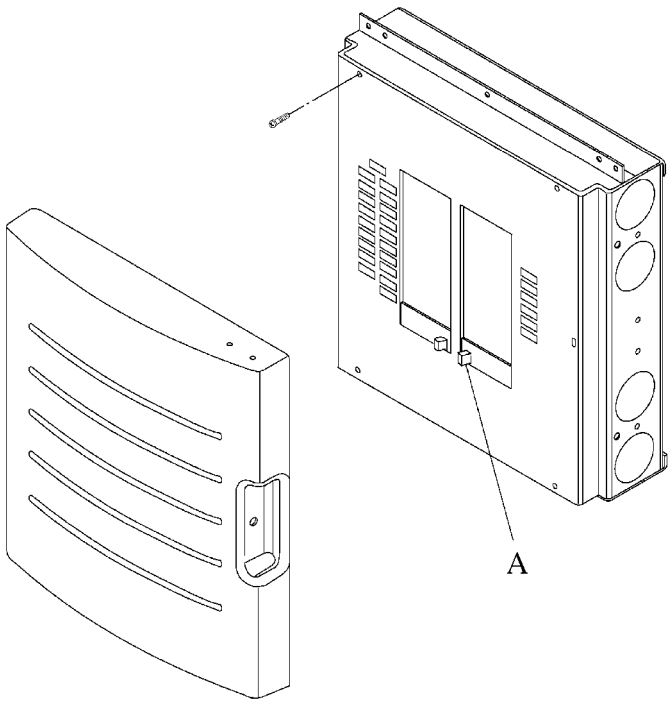

m238_102

c. Lock out and tag out the breaker.

2. Remove the screws (B) from the faceplate (C) (see figure 4-2 on page 4-5).
3. Remove the faceplate (C) and, if equipped, insulator (D).
4. Remove the electrical receptacle outlet attaching screws (E).
5. Remove the electrical receptacle outlet (F) from the opening in the headwall raceway.
6. Record the position of the color-coded wires (G) on the receptacle terminals.
7. Loosen the terminal screws, and remove the color-coded wires (G) from the terminals.

Figure 4-2. Electrical Receptacle Removal

Typical simplex

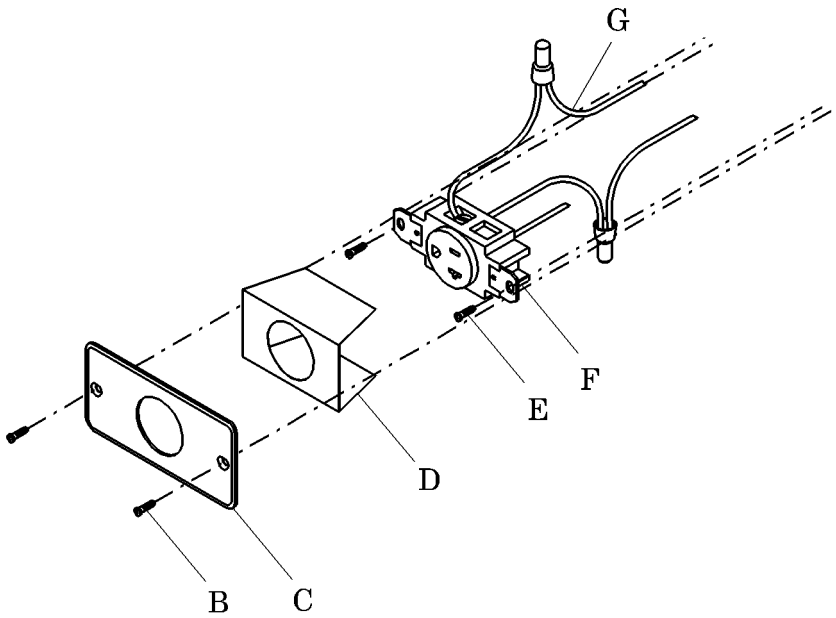

Typical duplex

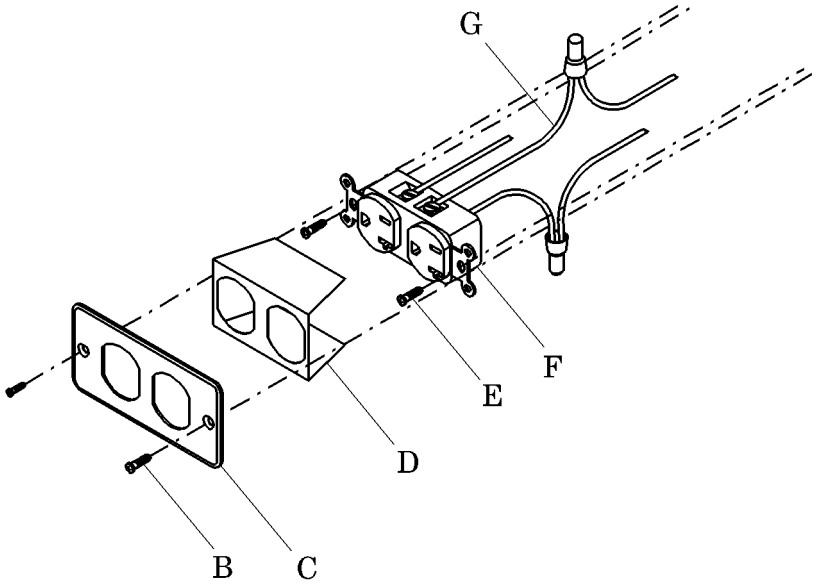

m238_103

Replacement

1. Install the color-coded wires (G) at their original terminals, and tighten the terminal screws.

2. Insert the electrical receptacle outlet (F) into the opening in the headwall raceway.

3. Install and tighten the electrical receptacle outlet attaching screws (E).

4. Install the insulator (D), if equipped, faceplate (C), and screws (B). Tighten the screws (B).

5. Remove the lockout and out-of-service tags, and set the circuit breaker (A) to the ON position (see figure 4-1 on page 4-3).

6. Test the receptacle for availability of power (see “Standard or Critical Branch Electrical Receptacle Is Inoperative” on page 2-9).

4.2 Ground Receptacle

Tools required: Screwdriver
Phillips head screwdriver

NOTE:
The following procedures apply to single and double ground receptacles.

Removal

1. Remove the screws (A) and faceplate (B) (see figure 4-3 on page 4-8).

2. Remove the screws (C) and mounting plate (D) from the opening in the headwall raceway.

3. Remove the nut (E), washer (F), dual ground tie bar (G), if applicable, and disconnect the ground receptacle wire(s).

4. Remove the screw (H), lockwasher (I), and ground wire, if applicable.

Figure 4-3. Ground Receptacle Removal

Typical ground receptacle

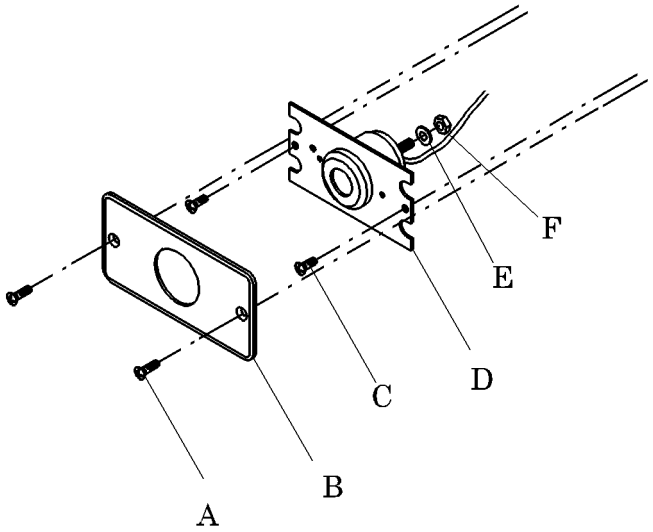

Typical duplex
ground receptacle

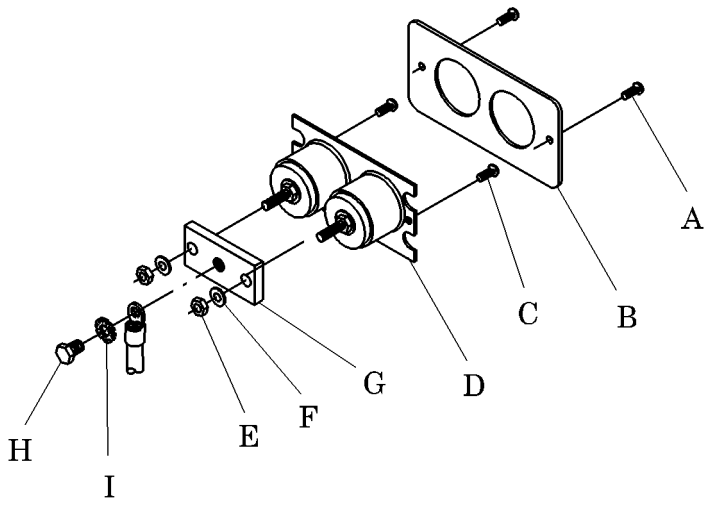

m238_104

Replacement

1. Install the ground wire, lockwasher (I), and screw (H), if applicable.
2. Connect the ground receptacle wire(s), and install the dual ground tie bar (G), if applicable, washer (F), and nut (E).
3. Install the mounting plate (D) and screws (C). Tighten the screws (C).
4. Install the faceplate (B) and screws (A). Tighten the screws (A).
5. Test the receptacle for availability of ground with a ground test light.

4.3 Dimmer Switch

Tools required: Screwdriver
Phillips head screwdriver

Removal

SHOCK HAZARD:
To minimize the risk of electrical shock or damage to equipment, disconnect all power to the system before working on it. Failure to do so could result in personal injury or equipment damage.

1. Perform the following:
   a. Locate the involved building standard/critical branch circuit breaker panel.
   b. Set the involved circuit breaker (A) to OFF (see figure 4-1 on page 4-3).
   c. Lock out and tag out the breaker.
2. Remove the dimmer switch button (A) (see figure 4-4 on page 4-10).

Figure 4-4. Dimmer Switch Removal

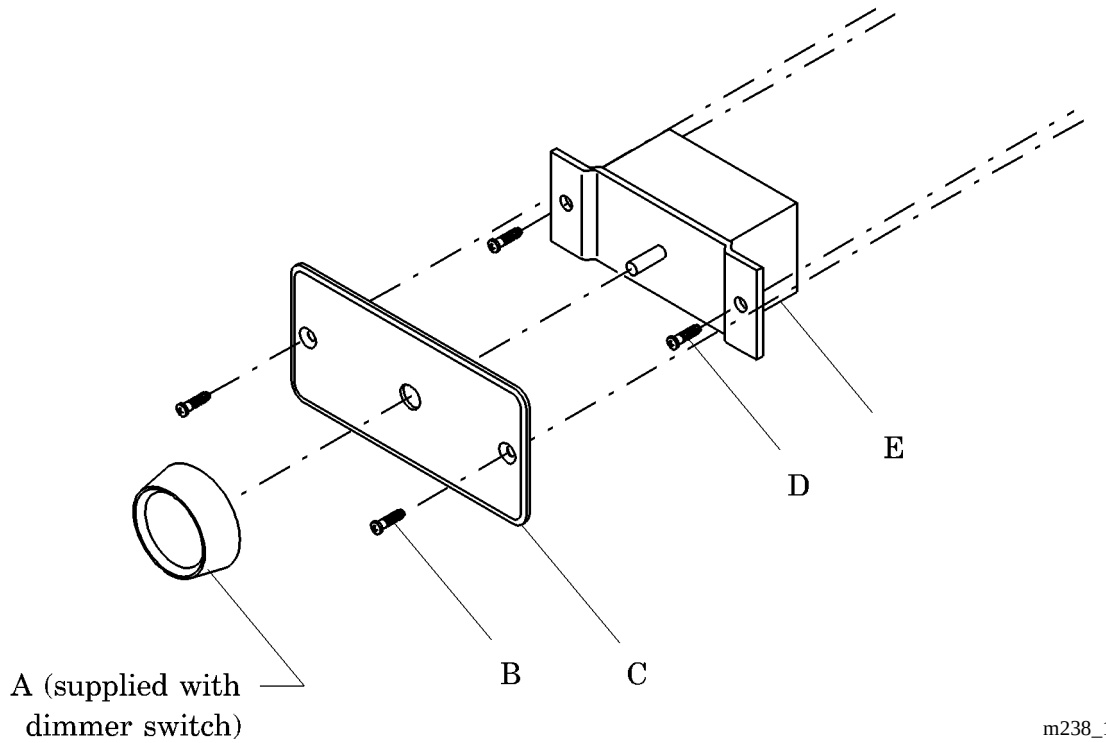

3. Remove the screws (B) and faceplate (C).
4. Remove the switch retaining screws (D), and remove the switch (E) from the headwall raceway.
5. Record the position of the color-coded wires on the switch terminals.
6. Loosen the terminal screws on the switch, and remove the wires from the switch (E).

Replacement

1. Install the color-coded wires at their original terminals, and tighten the terminal screws on the switch (E).
2. Insert the switch (E) into the opening in the raceway and the switch retaining screws (D). Tighten the switch retaining screws (D).
3. Install the faceplate (C) and screws (B). Tighten the screws (B).
4. Install the dimmer switch button (A).
5. Remove the lockout and out-of-service tags, and set the circuit breaker (A) to the ON position (see figure 4-1 on page 4-3).
6. Test the receptacle for availability of power (see “Dimmer Switch Will Not Operate the Light” on page 2-15).

4.4 Timed Light Switch and Toggle Switch

Tools required: Screwdriver
Phillips head screwdriver

Removal

SHOCK HAZARD:
To minimize the risk of electrical shock or damage to equipment, disconnect all electrical power to the system before working on it. Failure to do so could result in personal injury or equipment damage.

1. Perform the following:
   a. Locate the involved building standard/critical branch circuit breaker panel.
   b. Set the involved circuit breaker (A) to OFF (see figure 4-1 on page 4-3).
   c. Lock out and tag out the breaker.
2. Remove the timed light switch mounting screws (A) (see figure 4-5 on page 4-13).
3. Pull the timer assembly (B) away from the headwall raceway opening.
4. Remove the wire joint (C) from the timed light switch ground wire.
5. Remove the switch mounting screws (D).
6. Pull the switch (E) away from the headwall raceway opening.
7. Record the positions of the color-coded wires (F) on the timer assembly (B) and switch (E) terminals.
8. Loosen the terminal screws on the timer assembly (B) and switch (E), and remove the wires.

Figure 4-5. Timed Light Switch and Toggle Switch Removal

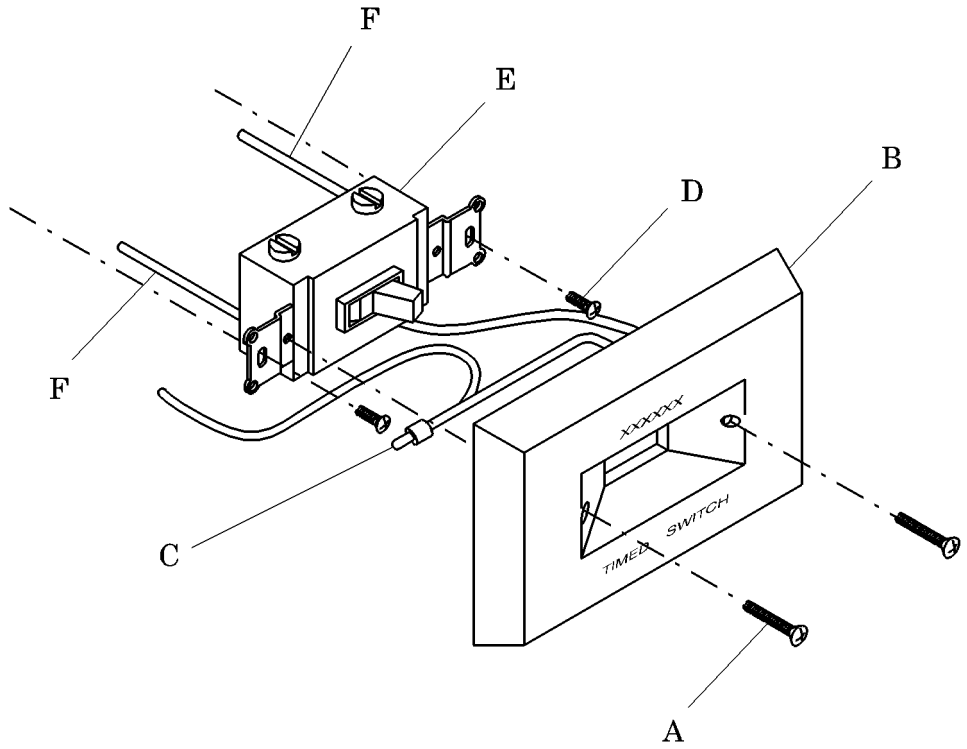

Replacement

1. Install the color-coded wires (F) at their original terminals, and tighten the terminal screws on the switch (E) and timer assembly (B).
2. Install the switch (E) and switch mounting screws (D). Tighten the switch mounting screws (D).
3. Install the wire joint (C) to the timed light switch ground wire.
4. Install the timer assembly (B) and timed light switch mounting screws (A). Tighten the timed light switch mounting screws (A).
5. Remove the lockout and out-of-service tags, and set the circuit breaker (A) to the ON position (see figure 4-1 on page 4-3).
6. Test the timed light switch or toggle switch for proper operation (see “Timed Light Switch or Toggle Switch Does Not Operate Properly” on page 2-16).

Adjustment

NOTE:
The timed light switch is adjustable from 10 minutes to 12 hours.

1. Remove the timed light switch mounting screws (A) and the timer assembly (B) (see figure 4-5 on page 4-13).

2. Find the dial (G) on the back of the timer assembly (see figure 4-6 on page 4-14).

Figure 4-6. Light Switch Timer Adjustment

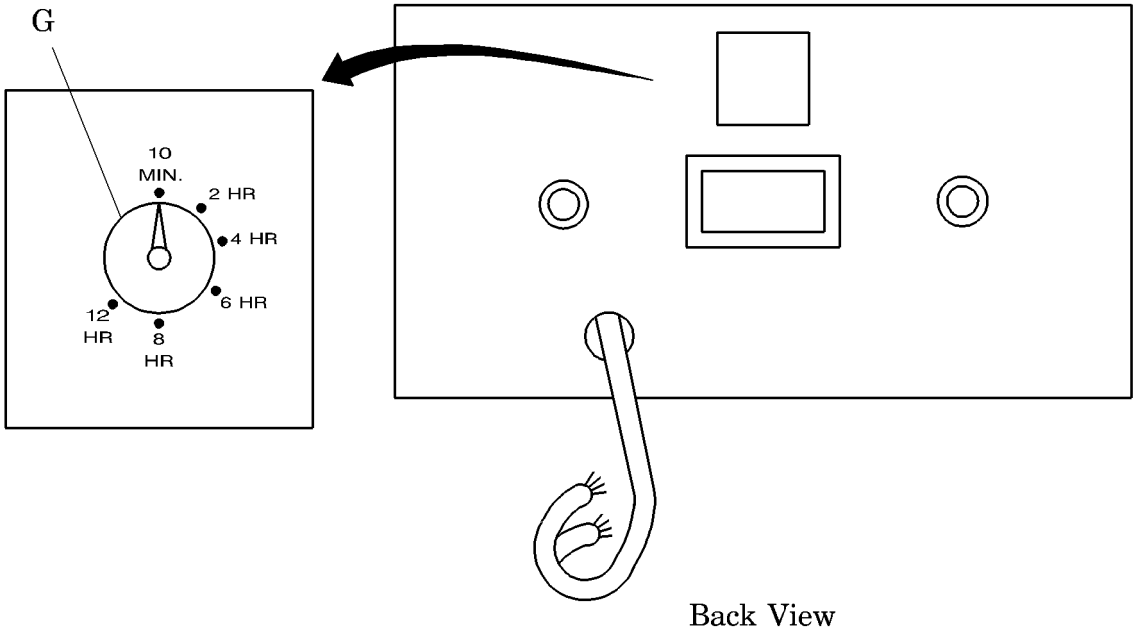

m238_107

3. Adjust the dial (G) to the desired setting between 10 minutes and 12 hours.

4. Install the timer assembly (B) and timed light switch mounting screws (A), and check for proper delay after switching the light off (see figure 4-5 on page 4-13).

4.5 Chart Light or Night Light Switch

Tools required: Screwdriver
Phillips head screwdriver
Adjustable wrench

Removal

SHOCK HAZARD:
To minimize the risk of electrical shock or damage to equipment, disconnect all electrical power to the system before working on it. Failure to do so could result in personal injury or equipment damage.

1. Perform the following:
   a. Locate the involved building standard/critical branch circuit breaker panel.
   b. Set the involved circuit breaker (A) to OFF (see figure 4-1 on page 4-3).
   c. Lock out and tag out the breaker.
2. Remove the screws (A) and the chart/night light faceplate (B) from the headwall raceway (see figure 4-7 on page 4-16).
3. Remove the screws (C) and device locks (D) from the headwall raceway.
4. Remove the backbox attaching screws (E) and backbox (F) from the headwall raceway.
5. Remove the hex nut (G) from the base of the switch (H).
6. Remove the switch (H) from the headwall raceway.
7. Record the positions of the color-coded wires on the switch (H) terminals.
8. Loosen the terminal screws on the switch, and remove the wires from the switch (H).

Figure 4-7. Chart Light or Night Light Switch Removal

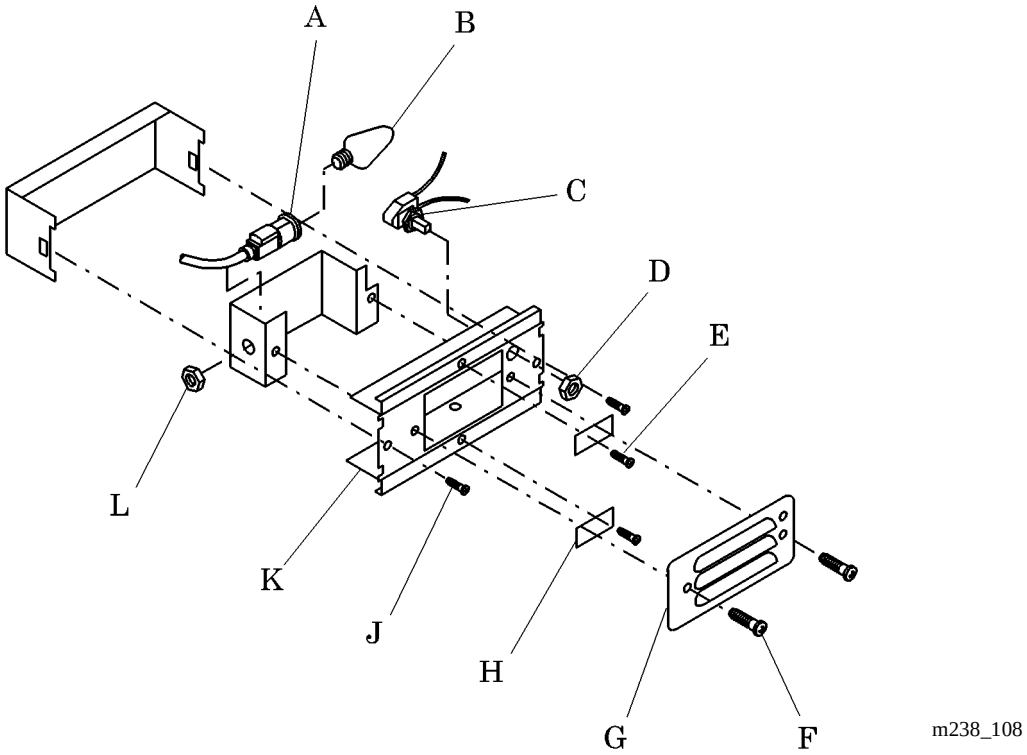

Replacement

1. Install the color-coded wires at their original terminals, and tighten the terminal screws on the switch (H).
2. Install the switch (H) and hex nut (G) to the backbox (F). Tighten the hex nut (G).
3. Install the backbox (F) and backbox attaching screws (E) in the headwall raceway. Tighten the backbox attaching screws (E).
4. Install the device locks (D) and screws (C). Tighten the screws (C).
5. Install the chart/night light faceplate (B) and screws (A). Tighten the screws (A).
6. Remove the lockout and out-of-service tags, and set the circuit breaker (A) to the ON position (see figure 4-1 on page 4-3).
7. Turn the switch on to see if the chart light or night light is working (see “Chart Light Does Not Come On” on page 2-13) or (see “Night Light Does Not Come On” on page 2-12).

4.6 Chart Light or Night Light Bulb

Tools required: Screwdriver
Phillips head screwdriver

Removal

SHOCK HAZARD:
To minimize the risk of electrical shock or damage to equipment, disconnect all electrical power to the system before working on it. Failure to do so could result in personal injury or equipment damage.

1. Perform the following:
   a. Locate the involved building standard/critical branch circuit breaker panel.
   b. Set the involved circuit breaker (A) to OFF (see figure 4-1 on page 4-3).
   c. Lock out and tag out the breaker.
2. Remove the screws (A) and the chart or night light faceplate (B) from the headwall raceway (see figure 4-8 on page 4-17).

Figure 4-8. Chart Light or Night Light Bulb Removal

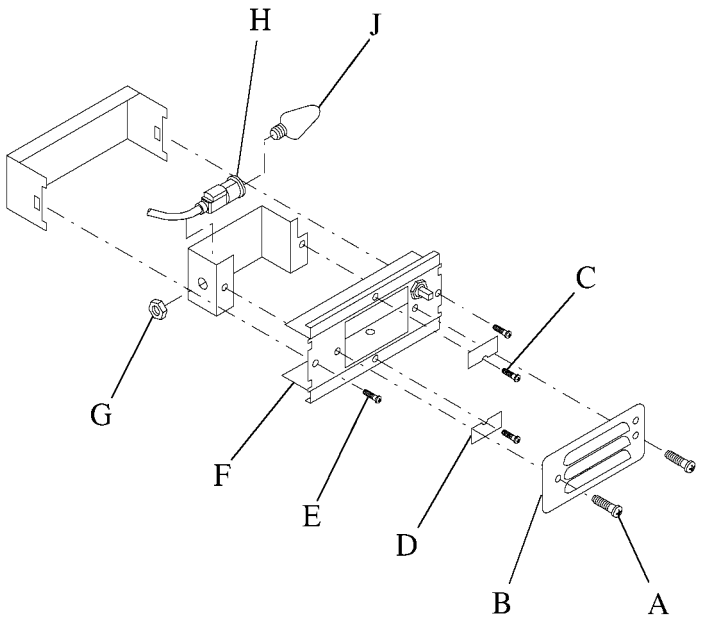

m238_109

3. Remove the screws (C) and device locks (D) from the headwall raceway.
4. Remove the backbox attaching screws (E) and backbox (F) from the headwall raceway.
5. Remove the hex nut (G) from the light fixture (H).
6. Remove the light bulb (J) from the light fixture (H).

Replacement

1. Install the new light bulb (J) in the light fixture (H).
2. Install the light fixture (H) and hex nut (G) to the backbox (F). Tighten the hex nut (G).
3. Install the backbox (F) and backbox attaching screws (E) in the headwall raceway. Tighten the backbox attaching screws (E).
4. Install the device locks (D) and screws (C). Tighten the screws (C).
5. Install the chart or night light faceplate (B) and screws (A) in the headwall raceway.
6. Remove the lockout and out-of-service tags, and set the circuit breaker (A) to the ON position (see figure 4-1 on page 4-3).
7. Check the chart light or night light for proper operation (see “Chart Light Does Not Come On” on page 2-13) or (see “Night Light Does Not Come On” on page 2-12).

4.7 Down Light Bulb

Tools required: Screwdriver
Phillips head screwdriver Step ladder

NOTE:
The following procedures apply to chase, outrigger, and plain frame assemblies.

Removal

SHOCK HAZARD:
To minimize the risk of electrical shock or damage to equipment, disconnect all electrical power to the system before working on it. Failure to do so could result in personal injury or equipment damage.

1. Perform the following:
   a. Locate the involved building standard/critical branch circuit breaker panel.
   b. Set the involved circuit breaker (A) to OFF (see figure 4-1 on page 4-3).
   c. Lock out and tag out the breaker.
2. Remove the screws (A) and lens (B) light assembly (D) (see figure 4-9 on page 4-20).

Figure 4-9. Down Light Bulb Removal

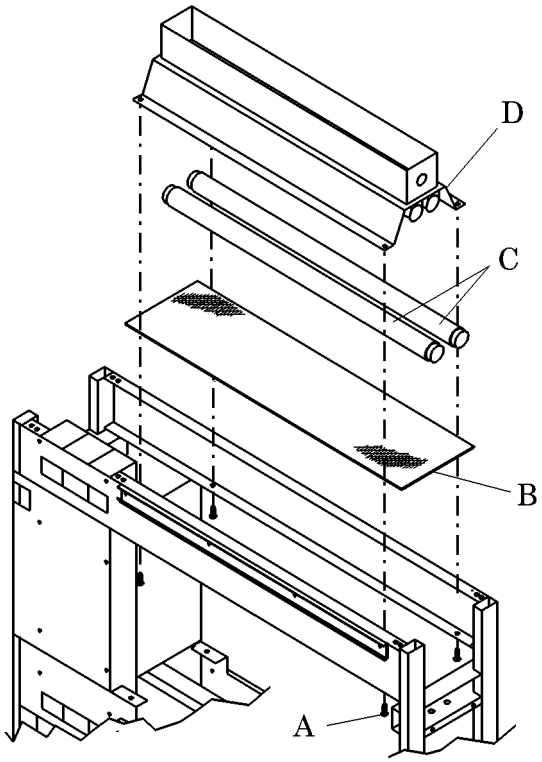

m238_112

3. Remove the desired bulb (C) from the light assembly (D).

Replacement

1. Install the new bulb (C) into the light assembly (D).
2. Install the lens (B) onto the light assembly (D) with the screws (A).
3. Tighten the screws (A) to secure the light assembly (D) and lens (B).
4. Remove the lockout and out-of-service tags, and set the circuit breaker (A) to the ON position (see figure 4-1 on page 4-3).
5. Check the down light for proper operation (see “Down Light Does Not Come On” on page 2-10).

4.8 Indirect Light Bulb

Tools required: Step ladder

NOTE:
The following procedures apply to chase, outrigger, and plain frame assemblies.

Removal

SHOCK HAZARD:
To minimize the risk of electrical shock or damage to equipment, disconnect all electrical power to the system before working on it. Failure to do so could result in personal injury or equipment damage.

1. Perform the following:
   a. Locate the involved building standard/critical branch circuit breaker panel.
   b. Set the involved circuit breaker (A) to OFF (see figure 4-1 on page 4-3).
   c. Lock out and tag out the breaker.
2. Remove retaining clips (A) and lens (B) (see figure 4-10 on page 4-21).

Figure 4-10. Indirect Light Bulb Removal

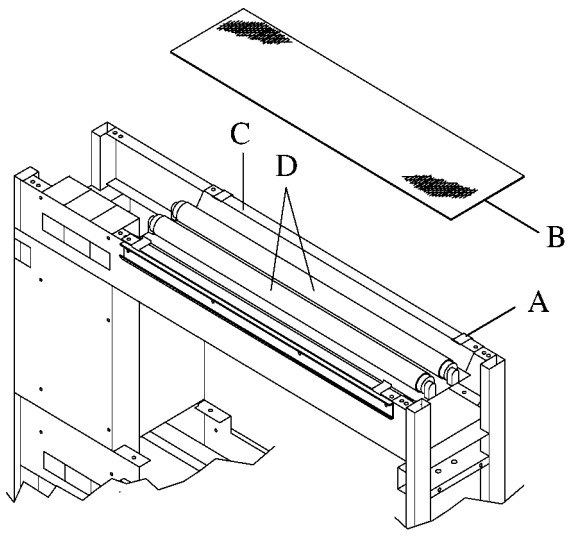

m238_113

3. Remove the desired bulb (D) from the light assembly (C).

Replacement

1. Install the new bulb (D) into the light assembly (C).
2. Install the lens (B) and retaining clips (A) onto the light assembly (C) to secure the light assembly and lens.
3. Remove the lockout and out-of-service tags, and set the circuit breaker (A) to the ON position (see figure 4-1 on page 4-3).
4. Check the indirect light for proper operation (see “Indirect Light Does Not Come On” on page 2-11).

4.9 STAT Clock/Timer

Tools required: Screwdriver
Phillips head screwdriver

Removal

SHOCK HAZARD:
To minimize the risk of electrical shock or damage to equipment, disconnect all electrical power to the system before working on it. Failure to do so could result in personal injury or equipment damage.

1. Perform the following:
   a. Locate the involved building standard/critical branch circuit breaker panel.
   b. Set the involved circuit breaker (A) to OFF (see figure 4-1 on page 4-3).
   c. Lock out and tag out the breaker.
2. Remove the STAT Clock/Timer mounting screws (A) (see figure 4-11 on page 4-24).
3. Remove the STAT Clock/Timer (B) away from the pivot frame (C).
4. Record the positions of the color-coded wires on the STAT Clock/Timer (B).
5. Loosen the terminal screws on the STAT Clock/Timer (B), and remove the wires.

Figure 4-11. STAT Clock/Timer Removal

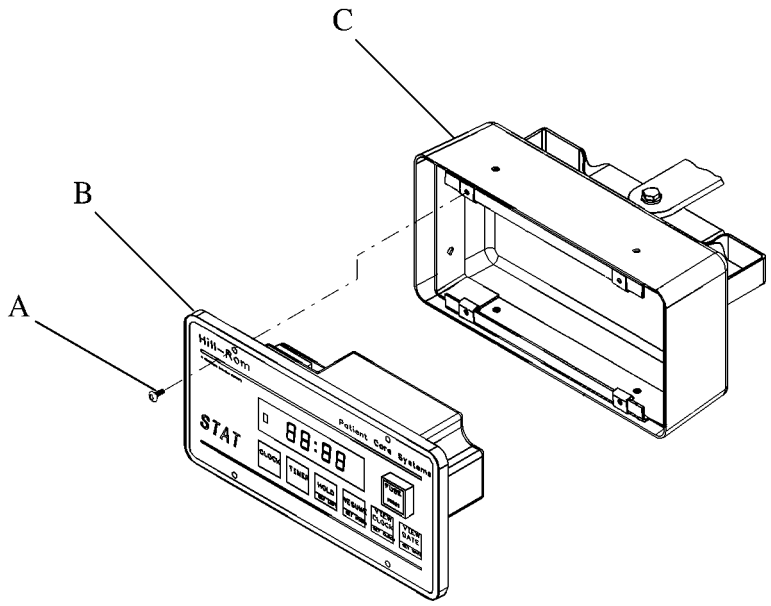

m238_110

Replacement

1. Install the color-coded wires at their original terminals, and tighten the terminal screws on the STAT Clock/Timer (B).

2. Install the STAT Clock/Timer (B) and STAT Clock/Timer mounting screws (A) on the pivot frame (C). Tighten the STAT Clock/Timer mounting screws (A).

3. Remove the lockout and out-of-service tags, and set the circuit breaker (A) to the ON position (see figure 4-1 on page 4-3).

4. Test the STAT Clock/Timer for proper operation (see “STAT Clock/Timer Will Not Operate” on page 2-18).

4.10 Circuit Breaker

Tools required: Screwdriver
Phillips head screwdriver

Removal

SHOCK HAZARD:
To minimize the risk of electrical shock or damage to equipment, disconnect all electrical power to the system before working on it. Failure to do so could result in personal injury or equipment damage.

1. Perform the following:
   a. Locate the involved building standard/critical branch circuit breaker panel.
   b. Set the involved circuit breaker (A) to OFF (see figure 4-1 on page 4-3).
   c. Lock out and tag out the breaker.
2. Note the position of the Neonatal Horizon® Headwall System circuit breaker to be replaced (see figure 4-12 on page 4-26).
3. Remove the dead front panel (A).
4. Remove the screws (B) and breaker cover (C) from the breaker panel assembly (D).
5. Remove the retaining screws and kit (F), if equipped, for the malfunctioning circuit breaker (E).
6. Record the position of the color-coded wires on the circuit breaker (E).
7. Remove one, two, or three wires from the one pole, two pole, or three pole circuit breaker (E).

Figure 4-12. Circuit Breaker (Standard/Critical Branch) Removal

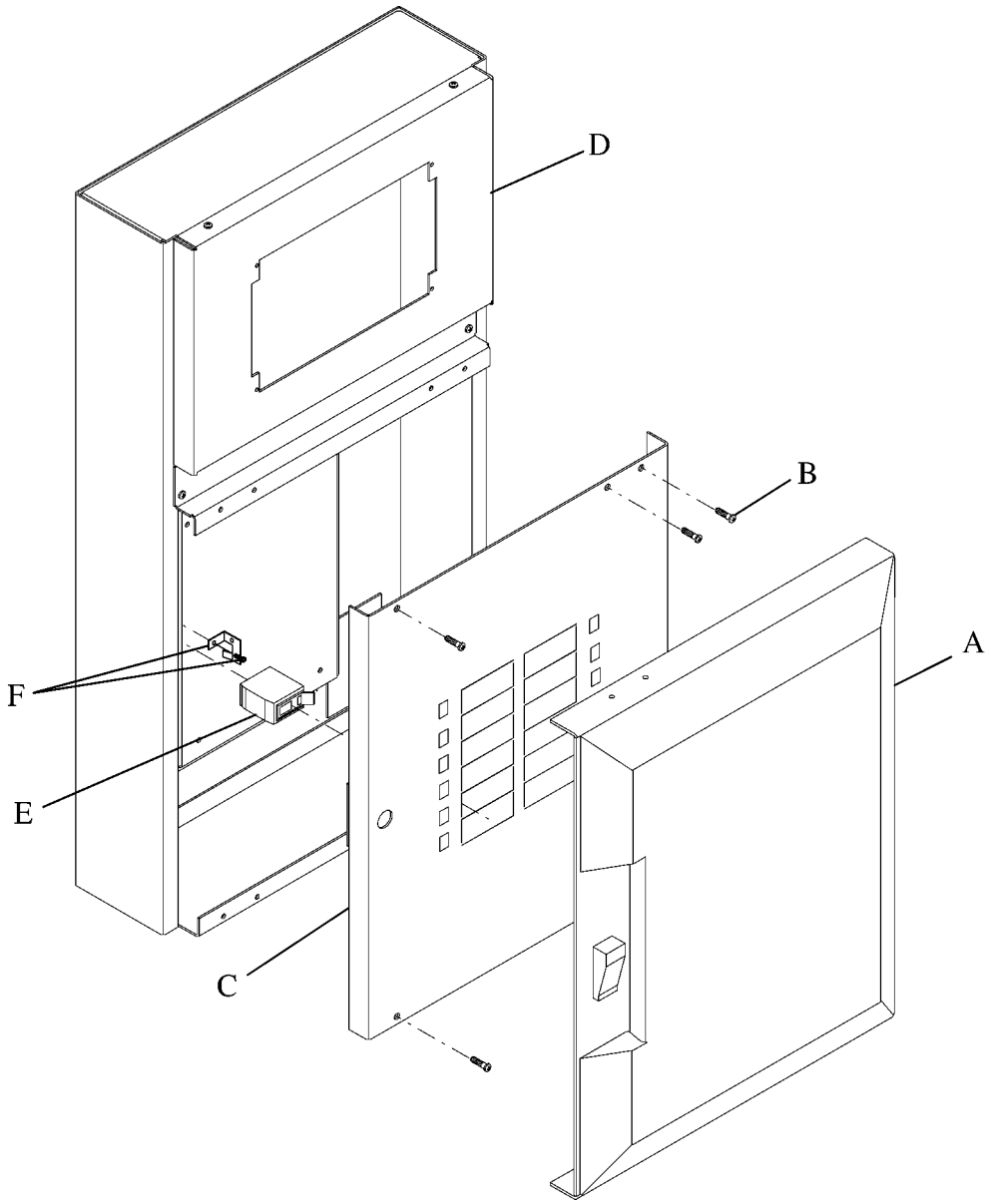

m238_111

Replacement

1. Install the color-coded wires in the circuit breaker (E) in their original positions.
2. Install the circuit breaker (E) and retaining screws and kit (F), if equipped.
3. Install the screws (B), breaker cover (C), and dead front panel (A) on the breaker panel assembly (D).
4. Remove the lockout and out-of-service tags, and set the building circuit breaker (A) to the ON position (see figure 4-1 on page 4-3).
5. Check the Neonatal Horizon® Headwall System circuit breaker for proper operation (see “Circuit Breaker Is Inoperative” on page 2-6).

4.11 Moveable Gas Outlets

Tools required: Wrench
Torque wrench

Removal

1. Disconnect the hose assembly (A) from the gas manifold (see figure 4-13 on page 4-29).

2. Lift the release bar (B) and remove the gas outlet (C) from the horizontal raceway.

3. Remove the hose assembly (A) from the gas outlet (C).

NOTE:
The release bar (B) can only be ordered or replaced as an assembly. It is comprised of the release bar, label, label cover and two compression springs.

4. Gently separate the arms of the release bar (B) and remove it from the gas outlet (C).

Figure 4-13. Gas Outlet Removal

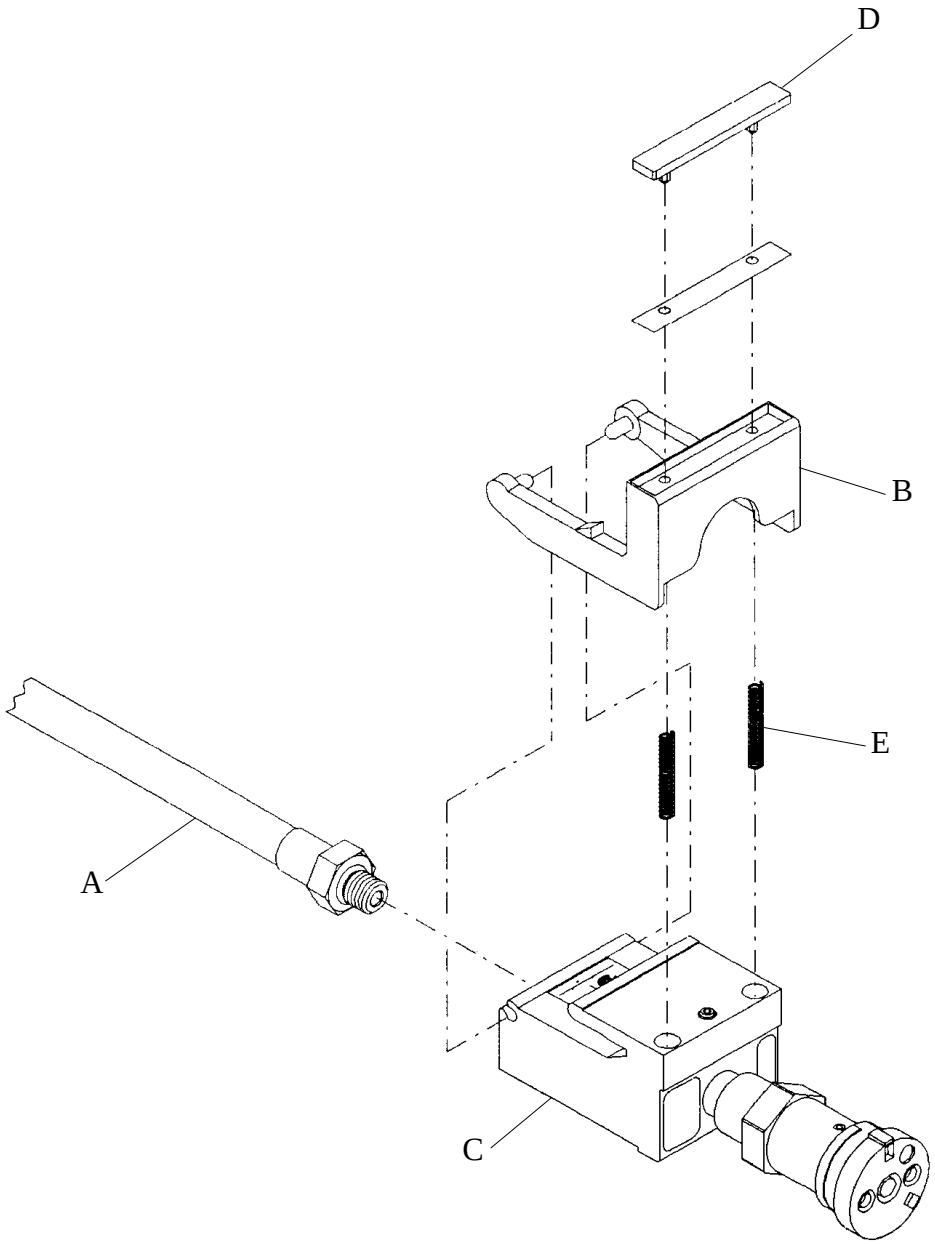

m238_120

Replacement

NOTE:
The release bar (B) can only be ordered or replaced as an assembly (see figure 4-13 on page 4-29). It is comprised of the release bar, label, label cover and two compression springs.

1. Push or thread the compression springs (E) on to the stud of the label cover (D).

2. Gently separate the arms of the release bar (B) and install it on the gas outlet (C).

3. Apply a minimum of two wraps of thread seal tape to the threads of the hose assembly (A) that connect to the gas outlet (C).

4. Install the hose assembly (B) on the gas outlet (C). Tighten the hose assembly fitting using the following torque values:

   a. The vacuum hose assembly is torqued to 20 to 26 ft-lb (27 to 35.1 N·m).

   b. The air hose assembly is torqued to 20 to 26 ft-lb (27 to 35.1 N·m).

   c. The oxygen hose assembly is torqued to 13-16 ft-lb (17.5 to 21.6 N·m).

5. Connect the hose assembly (A) to the gas manifold.

Chapter 5
Parts List

Chapter Contents

Warranty . . . . . 5 - 5
Service Parts Ordering . . . . . 5 - 7
Exchange Policy . . . . . 5 - 9
In-Warranty Exchanges . . . . . 5 - 9
Out-of-Warranty Exchanges . . . . . 5 - 9
Recommended Spare Parts . . . . . 5 - 10
Shop Drawings . . . . . 5 - 10
Label Set . . . . . 5 - 12
Three Foot Chase Frame Assembly, Level II Single Sided . . . . . 5 - 14
Three Foot Chase Frame Assembly, Level II Double Sided . . . . . 5 - 18
Three Foot Chase Frame Assembly, Level III Single Sided . . . . . 5 - 22
Three Foot Chase Frame Assembly, Level III Double Sided. . . . . 5 - 26
Four Foot Chase Frame Assembly, Level II Single Sided . . . . . 5 - 30
Four Foot Chase Frame Assembly, Level II Double Sided . . . . . 5 - 34
Four Foot Chase Frame Assembly, Level III Single Sided . . . . . 5 - 38
Four Foot Chase Frame Assembly, Level III Double Sided. . . . . 5 - 42
Three Foot Outrigger Frame Assembly, Level II Single and Double Sided . . . . 5 - 46
Three Foot Outrigger Frame Assembly, Level III Single and Double Sided. . . . 5 - 50
Four Foot Outrigger Frame Assembly, Level II Single and Double Sided . . . . . 5 - 54
Four Foot Outrigger Frame Assembly, Level III Single and Double Sided. . . . . 5 - 58
Three Foot Plain Frame Assembly, Level II Single and Double Sided . . . . . 5 - 62
Three Foot Plain Frame Assembly, Level III Single and Double Sided . . . . . 5 - 64
Four Foot Plain Frame Assembly, Level II Single and Double Sided . . . . . 5 - 66

5

Four Foot Plain Frame Assembly, Level III Single and Double Sided . . . . . 5 - 68
Three Foot Countertop Frame Assembly . . . . . 5 - 70
Four Foot Countertop Frame Assembly With Chase Extension. . . . . 5 - 72
Four Foot Countertop Frame Assembly . . . . . 5 - 76
Countertops. . . . . 5 - 78
Isolated Power Breaker Panel . . . . . 5 - 80
Gas Manifold Tree . . . . . 5 - 82
Gas Riser Tree . . . . . 5 - 86
Light Raceway Assembly . . . . . 5 - 88
Gas Raceway Assembly . . . . . 5 - 90
Hose Panel Assembly . . . . . 5 - 94
Ceiling Shroud Assembly, Single and Double Sided . . . . . 5 - 96
Monitor Shelf Assembly. . . . . 5 - 98
Monitor Shelf Without Light . . . . . 5 - 102
Three Foot Sound Baffle Assembly . . . . . 5 - 104
Four Foot Sound Baffle Assembly . . . . . 5 - 106
Top Shelf for Level II Frame Assemblies, Single and Double Sided. . . . . 5 - 108
Center Shelf for Level lll Frame Assemblies,
Single and Double Sided. . . . . 5 - 110
Top Shelf for Level III Frame Assemblies . . . . . 5 - 112
Down Lighting for Outrigger or Plain Frame Assemblies . . . . . 5 - 114
Down Lighting for Chase Frame Assemblies. . . . . 5 - 116
Indirect Lighting for Chase Frame Assemblies . . . . . 5 - 118
Duplex Outlet Receptacles . . . . . 5 - 120
Simplex and Hubbellock Outlet Receptacles . . . . . 5 - 122
Ground Receptacles . . . . . 5 - 124
Monitor Slide—P1007N2. . . . . 5 - 126
Opthalmoscope Mount—P1020S1, P1020S2, P1020S4 . . . . . 5 - 128
Aneroid Sphygmomanometer—P978-01 and Mount—P102503, Mercurial
Sphygmomanometer—P977-01 and Mount—P102402. . . . . 5 - 130
Cuff Basket—P102802. . . . . 5 - 132

Bird Blender Mount, Extends Down—P1020B1 . . . . . 5 - 134
Bird Blender Mount, Extends Up—P1020NB1 . . . . . 5 - 136
Bottle Slide—P1020A1 and Extended Bottle Slide—P1020N1 . . . . . 5 - 138
Cable Organizer—P103602 . . . . . 5 - 140
Resuscitator Bag Holder—P102202. . . . . 5 - 142
STAT Clock, Pod Mounted—P101811 . . . . . 5 - 144
Utility Hook—P102602 . . . . . 5 - 146
Short Post Utility Mount—P972N01 . . . . . 5 - 148
Dual Post Utility Mount—P972D01. . . . . 5 - 150
ISS Support Arm—P976H01 and Transfer Pole—P158 . . . . . 5 - 152
IV Hanger—P971H00 . . . . . 5 - 154
Universal Holder. . . . . 5 - 156
Chart Holder—P102102 . . . . . 5 - 158
Waste Receptacle Assembly—P1017. . . . . 5 - 160
Mobile Storage Cabinet—P101203B . . . . . 5 - 162
Storage Basket, Small—P1029S2 and Large—P1029L2. . . . . 5 - 164
Utility Shelf—P101402 . . . . . 5 - 166
Arm Light Mount—P100801 . . . . . 5 - 168
Arm Lamp, Incandescent—P963C01 and Incandescent/Fluorescent—
P963C02 . . . . . 5 - 170
Exam Plus® Mount—P100901 . . . . . 5 - 172
Exam Plus® Light—P965-01. . . . . 5 - 174
Utility Light—P102702 . . . . . 5 - 178
Gas Outlet—Ohio . . . . . 5 - 180
Gas Outlet—Chemetron™ . . . . . 5 - 182
Gas Outlet—Puritan-Bennet™ . . . . . 5 - 184
Gas Outlet—Oxequip™ . . . . . 5 - 186
Gas Outlet—DISS. . . . . 5 - 188

5

NOTES:

Warranty

HILL-ROM, INC.
LIMITED WARRANTY

Hill-Rom, Inc. (Hill-Rom) has a long tradition of providing superior products and service to our customer. Our goal is "Total Customer Satisfaction". In that spirit, Hill-Rom is proud to offer the following warranty.

GENERAL WARRANTY (APPLICABLE UNLESS A SPECIFIC WARRANTY IS LISTED)

Hill-Rom warrants to the original purchaser that its products and replacement parts shall be free from defects in material and workmanship for a period of one (1) year from date of delivery. Hill-Rom's obligation under this warranty is expressly limited to supplying replacement parts and/or service for, or replacing, at its option, any product which is, in the sole discretion of Hill-Rom, found to be defective. In addition to the foregoing one year warranty, Hill-Rom warrants to the original purchaser that the frame and welds on its products will be free from structural defects for the life of the product. Any product upgrade or modification initiated by Hill-Rom does not affect the original product warranty.

SPECIFIC WARRANTIES

MATTRESS WARRANTIES

Hill-Rom warrants to the original purchaser that its mattress product shall be free from defects in material and workmanship for a period of two (2) years from date of delivery. However, electro mechanical mattress components (compressors, valves, printed circuit boards, hoses, and couplers) are covered by the general one (1) year warranty.

EXPENDABLES WARRANTIES

A sixty (60) day limited warranty from date of delivery applies to expendable parts such as cushions, coverlets, software diskettes, locator badge batteries, dome light incandescent bulbs, overhead fluorescent tubes, heating elements, temperature probes, filter sheets, and microspheres. This warranty is limited to replacement of the parts covered.

TO OBTAIN PARTS AND SERVICE

In the United States, call Hill-Rom Technical Support Department at (800) 445-3720, Monday through Friday. In Canada, call Hill-Rom Technical Support Department at (800) 267-2337, Monday through Friday. Outside the United States and Canada, call your authorized Hill-Rom Distributor. In order to expedite service, we request you furnish the following information: customer identification number, product model number, serial number, and description of problem. A qualified specialist will provide, via telephone (United States and Canada), or FAX (Outside the United States and Canada), troubleshooting assistance for facility personnel and provide necessary parts to make repairs. If troubleshooting determines the need for on-site technical service, a qualified service representative will be dispatched. Replacement of non-technical items will be the responsibility of the customer. If requested by Hill-Rom, products or parts for which a warranty claim is made shall be returned prepaid to Hill-Rom's factory.

OUT OF WARRANTY EXCHANGE POLICY

After the expiration of the original warranty, upon request, Hill-Rom will ship as a replacement, components such as selected: motors and printed circuit boards, for like units returned to Hill-Rom by the original purchaser at a substantial savings. Please call Hill-Rom Technical Support Department for current pricing.

PARTS AVAILABILITY POLICY

Hill-Rom will offer parts for new and remanufactured products for ten (10) years from date of sale; for communications products for five (5) years from date of sale.

Note: Some original component parts and assemblies may not be available; functional equivalents may be substituted.

THE FOREGOING WARRANTIES ARE EXCLUSIVE AND IN LIEU OF ALL OTHER EXPRESS WARRANTIES AND IMPLIED WARRANTIES, INCLUDING BUT NOT LIMITED TO, THE IMPLIED WARRANTIES OF MERCHANTABILITY AND FITNESS OF PURPOSE. HILL-ROM'S OBLIGATION UNDER THESE WARRANTIES SHALL NOT INCLUDE ANY LIABILITY FOR LOSS OF PROFITS, DIRECT, INDIRECT OR CONSEQUENTIAL DAMAGES OR DELAYS. Some states, provinces, or countries do not allow the exclusion or limitation of incidental or consequential damages, so the above exclusion or limitation may not apply. Any improper or negligent use, any alterations or repairs not in accordance with Hill-Rom's manuals or performed by others in such manner as in Hill-Rom's sole judgment affects the product materially and adversely, shall void these warranties. These warranties do not cover failures due to misuse, abuse, neglect, or lack of routine maintenance. No employee or representative of Hill-Rom is authorized to change these warranties in any way or grant any other warranty unless in writing and signed by a Hill-Rom officer. These warranties provide specific legal rights; but, there may be other available rights, which vary from state to state, province to province, or country to country.

Revised October 20,1998

NOTES:

Service Parts Ordering

Using the parts lists in this manual, identify the part number(s) you require. Find the product number and serial number on the product identification label (A) (see figure 5-1 on page 5-7).

Figure 5-1. Product Identification Label Location

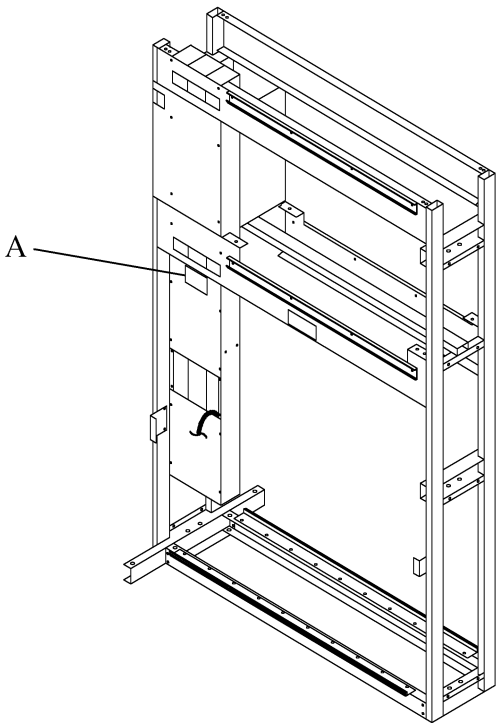

m238_007

Call Hill-Rom Technical Support at (800) 445-3720 with the following information:

- Six-digit customer account number
- Purchase order number
- Product number
- Serial number
- Part number(s)

Hill-Rom also provides a fax number to promptly order parts, request part prices and availability, or follow up on a service order. The fax number is (812) 934-8472.

To order parts, a $40.00 minimum will prevent a charge for processing your order.

Terms:

- Net 30 days
- F.O.B. Batesville, IN
- Prepaid shipping charges added to invoice
- All orders shipped UPS ground unless specified

Address all inquiries to:

ATTN TECHNICAL SUPPORT—PARTS
HILL-ROM, INC.
1069 STATE ROUTE 46 E
BATESVILLE IN 47006-9167

Address all return goods to:

ATTN SERVICE STORES
DISTRIBUTION CENTER DOOR D23
HILL-ROM, INC.
COUNTY ROAD 300E
BATESVILLE IN 47006-9167

NOTE:
To eliminate possible delays or incorrect billings, **do not** return any items without a Return Material Authorization (RMA) number. When a return is requested, an RMA packet is included with each order. This packet includes an RMA number, instructions, and a shipping label. If an RMA number is not available, obtain one by phoning Hill-Rom Technical Support at (800) 445-3720.

Exchange Policy

The following are policies for in-warranty and out-of-warranty exchanges from Hill-Rom.

In-Warranty Exchanges

In some cases, Hill-Rom will request that parts/products be returned for inspection. When this occurs, you are expected to return parts/products within 30 days of receipt of the exchange part. If you fail to return the inoperative parts/products within the 30 day period, Hill-Rom will invoice your facility for the full selling price of the parts/products.

NOTE:
The preceding billing procedure pertains **only** to parts/products that Hill-Rom requests to be returned.

In some cases, the invoice accompanying the parts will show the full selling price (only for Hill-Rom's internal use). Do not confuse this price with your price.

Do not return any parts without an RMA number. When parts/products have been requested to be returned, Hill-Rom will include an RMA packet with the parts/products shipment. If an RMA number is not available, obtain one by phoning Hill-Rom Technical Support at (800) 445-3720.

Out-of-Warranty Exchanges

You are expected to return the inoperative parts/products within 30 days of receipt of the exchange part. Hill-Rom will include an RMA packet with the parts/products shipment. If an RMA number is not available, obtain one by phoning Hill-Rom Technical Support at (800) 445-3720. If you fail to return the inoperative parts/products within 30 days, Hill-Rom will invoice your facility for the full selling price of the parts/products. Upon return of the inoperative parts/products, Hill-Rom will issue a credit for the discounted price.

Recommended Spare Parts

There are no recommended spare parts for the Neonatal Horizon® Headwall System.

Shop Drawings

There are many variations to the Neonatal Horizon® Headwall System. The units you have in your hospital contain unique, customer specific options, and provision placements. The set of shop drawings that you should have received from either Hill-Rom, the architect, or the contractor show exactly what options went into your units and where the provisions are placed. Keep these drawings in an accessible location for quick reference when ordering service parts or additional units. These drawings also include wiring diagrams for your units.

NOTES:

Label Set

Figure 5-2. Label Set

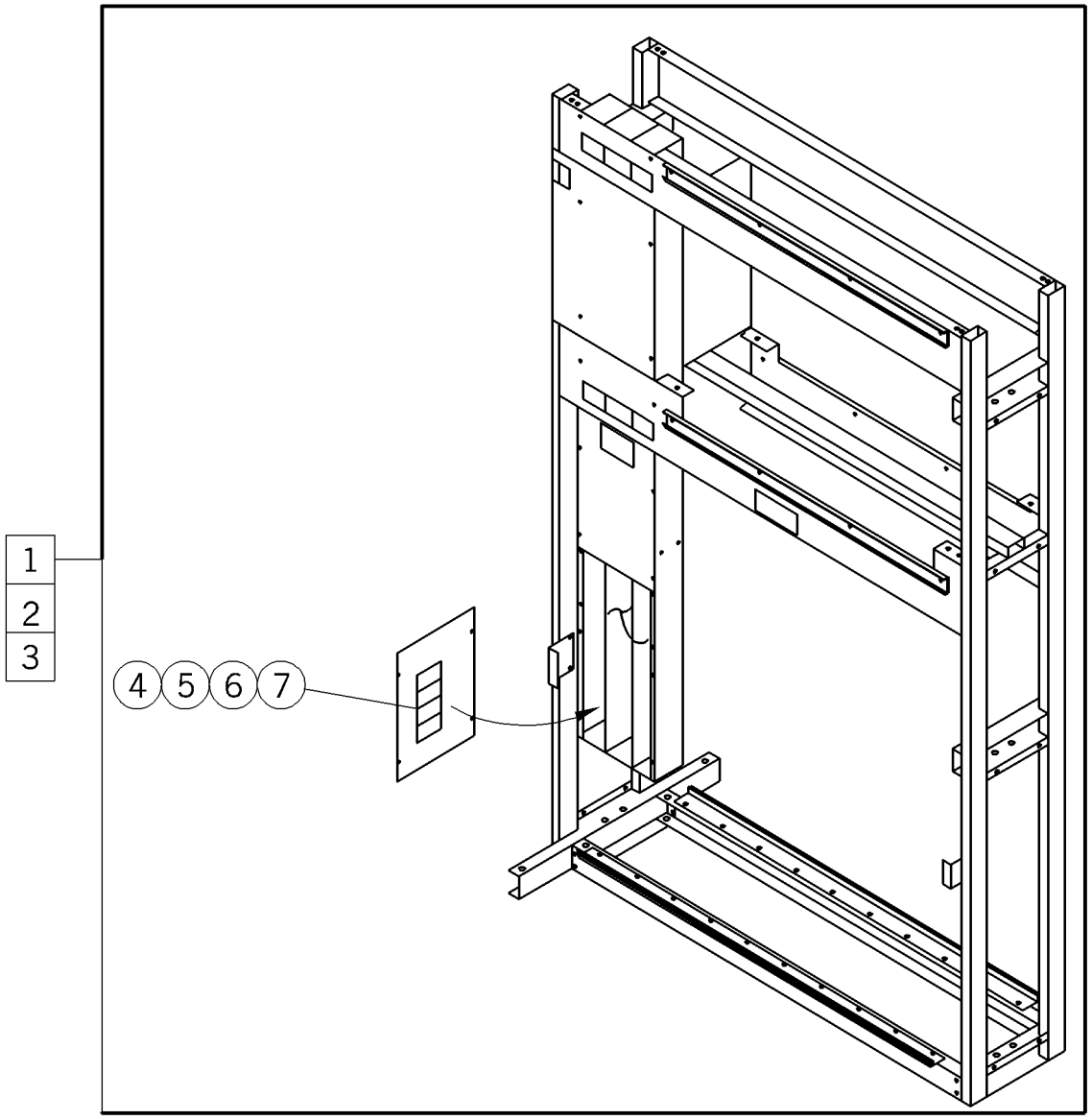

m238_056

Table 5-1. Label Set

Item Number	Part Number	Quantity	Description
1	10012801 (1001)	1	Label set - UL
2	10012802 (1001)	1	Label set - C.S.A. - single sided
3	10012803 (1001)	1	Label set - C.S.A. - double sided
4	32475 (1001)	1 or 2	Label, warning (used on 100128-02) Label, warning (used on 100128-03)
5	53449 (1001)	1	Label, NYC (used on 100128-01)
6	56085 (1001)	As required	Label, blank
7	32252 (1001)	1	Label, torque

Three Foot Chase Frame Assembly, Level II Single Sided

Figure 5-3. Three Foot Chase Frame Assembly, Level II Single Sided

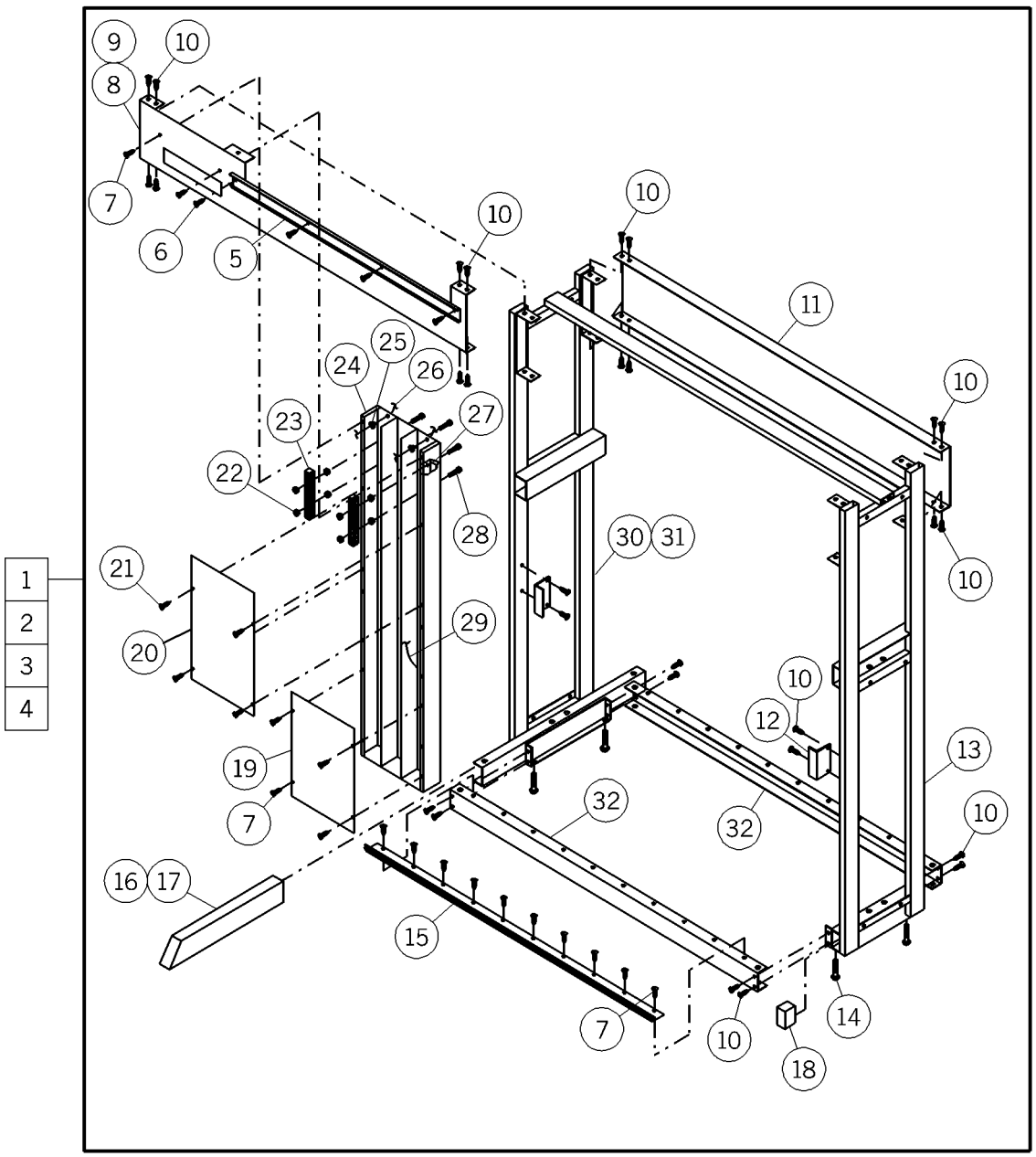

m238_008

Table 5-2. Three Foot Chase Frame Assembly, Level II Single Sided

Item Number	Part Number	Quantity	Description
1	10015042 (1001)	1	Chase frame assembly, rh level II, single sided (in series)
2	10015043 (1001)	1	Chase frame assembly, lh level II, single sided (in series)
3	10015045 (1001)	1	Chase frame assembly, rh level II, single sided (stand-alone)
4	10015046 (1001)	1	Chase frame assembly, lh level II, single sided (stand-alone)
5	54660 (1001)	1	Hanger with chase
6	54095 (1001)	4	Screw
7	393 (1001)	16	Screw
8	5356601 (1001)	1	Brace assembly, raceway center rh (used on 10015042 and 45)
9	5356602 (1001)	1	Brace assembly, raceway center lh (used on 10015043 and 46)
10	53244-04 (1001)	14	Screw
11	54568 (1001)	1	Frame center raceway
12	52853 (1001)	2	Door bracket
13	54585 (1001)	1	End assembly, free standing (used on 10015042 and 43)
14	52872 (1001)	4	Leveling screw
15	52903 (1001)	1	Bracket - hose panel
16	52926 (1001)	1 or 2	Leg (used on 10015042 and 43) Leg (used on 10015045 and 46)
17	53025 (1001)	1	Boot
18	53176-39 (1001)	1	Plug cap (if required)
19	56372 (1001)	1	Junction box plate
20	52788 (1001)	1	Front plate
21	53125-01 (1001)	4	Screw
22	15250 (1001)	8	Locknut, washer base
23	56551 (1001)	2	Ground bar
24	56393 (1001)	1	Chase assembly

Item Number	Part Number	Quantity	Description
25	18148 (1001)	2	Snap bushing
26	54133-09 (1001)	1	Lead wire, green - 9"
27	32112 (1001)	1	Reference ground label
28	52243-07 (1001)	4	Screw
29	51259-48 (1001)	1	Lead wire, green
30	5458301 (1001)	1	End assembly, rh (used on 10015042, 45 and 46)
31	5458302 (1001)	1	End assembly, lh (used on 10015043, 45 and 46)
32	52734 (1001)	2	Frame kickboard

NOTES:

Three Foot Chase Frame Assembly, Level II Double Sided

Figure 5-4. Three Foot Chase Frame Assembly, Level II Double Sided

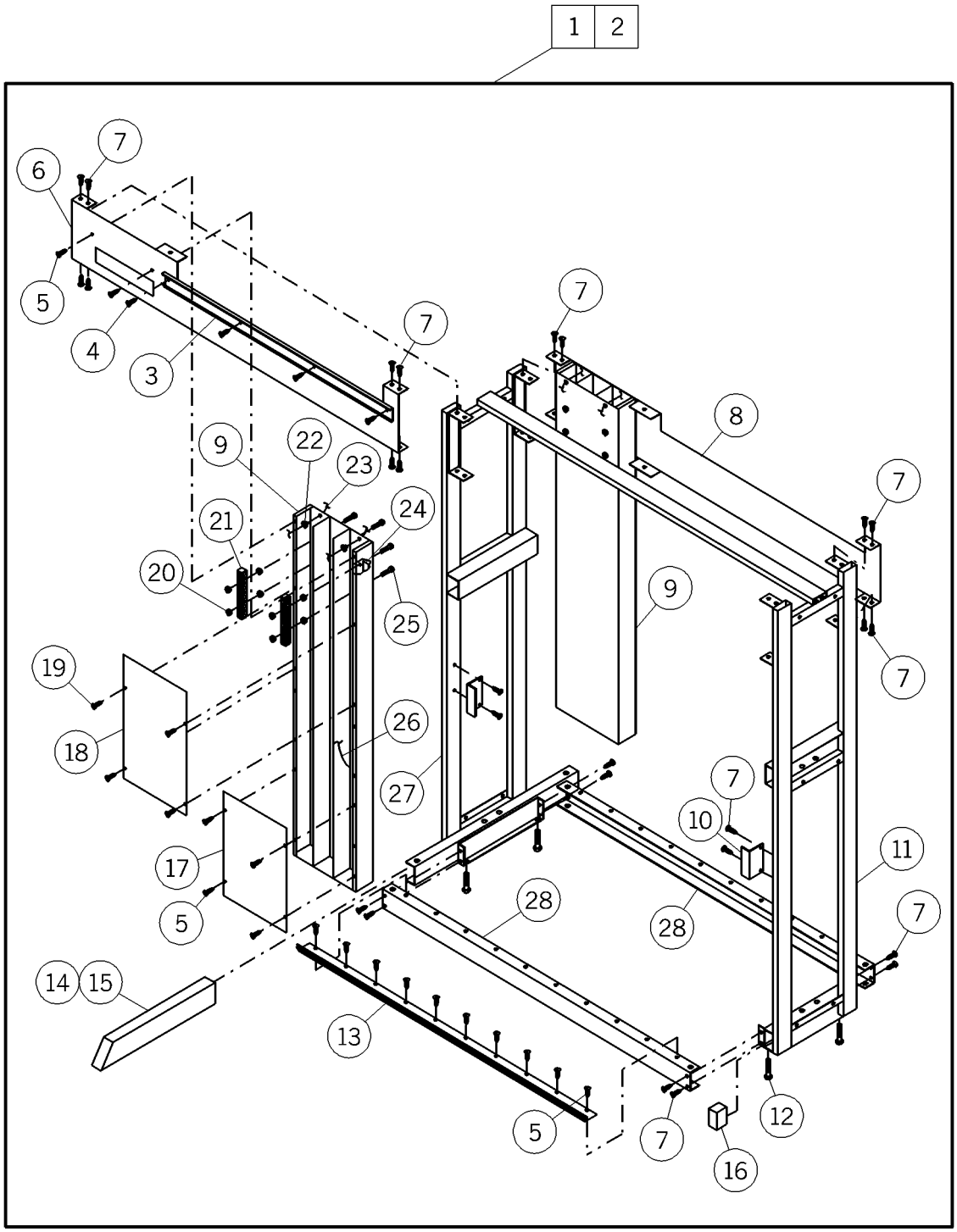

m238_009

Table 5-3. Three Foot Chase Frame Assembly, Level II Double Sided

Item Number	Part Number	Quantity	Description
1	10015041 (1001)	1	Chase frame assembly level II, double sided (in series)
2	10015044 (1001)	1	Chase frame assembly level II, double sided (stand-alone)
3	54660 (1001)	2	Hanger with chase
4	54095 (1001)	8	Screw
5	393 (1001)	32	Screw
6	5356602 (1001)	1	Brace assembly, raceway center lh (used on 10015041 and 44)
7	53244-04 (1001)	28	Screw
8	5356601 (1001)	1	Brace assembly, raceway center rh (used on 10015041 and 44)
9	56393 (1001)	2	Chase assembly
10	52853 (1001)	4	Door bracket
11	54585 (1001) or 54582 (1001)	1 1	End assembly, free standing (used on 10015041) End assembly, double (used on 10015044)
12	52872 (1001)	4	Leveling screw
13	52903 (1001)	2	Bracket - hose panel
14	52926 (1001)	2 or 4	Leg (used on 10015041) Leg (used on 10015044)
15	53025 (1001)	1	Boot
16	53176-39 (1001)	1	Plug cap (if required)
17	56372 (1001)	2	Junction box plate
18	52788 (1001)	2	Front plate
19	53125-01 (1001)	8	Screw
20	15250 (1001)	16	Locknut, washer base
21	56551 (1001)	4	Ground bar
22	18148 (1001)	4	Snap bushing
23	54133-09 (1001)	2	Lead wire, green - 9"
24	32112 (1001)	2	Reference ground label

Item Number	Part Number	Quantity	Description
25	52243-07 (1001)	8	Screw
26	51259-48 (1001)	2	Lead wire, green
27	54582 (1001)	1	End assembly, double (used on 10015041 and 44)
28	52734 (1001)	2	Frame kickboard

NOTES:

Three Foot Chase Frame Assembly, Level III Single Sided

Figure 5-5. Three Foot Chase Frame Assembly, Level III Single Sided

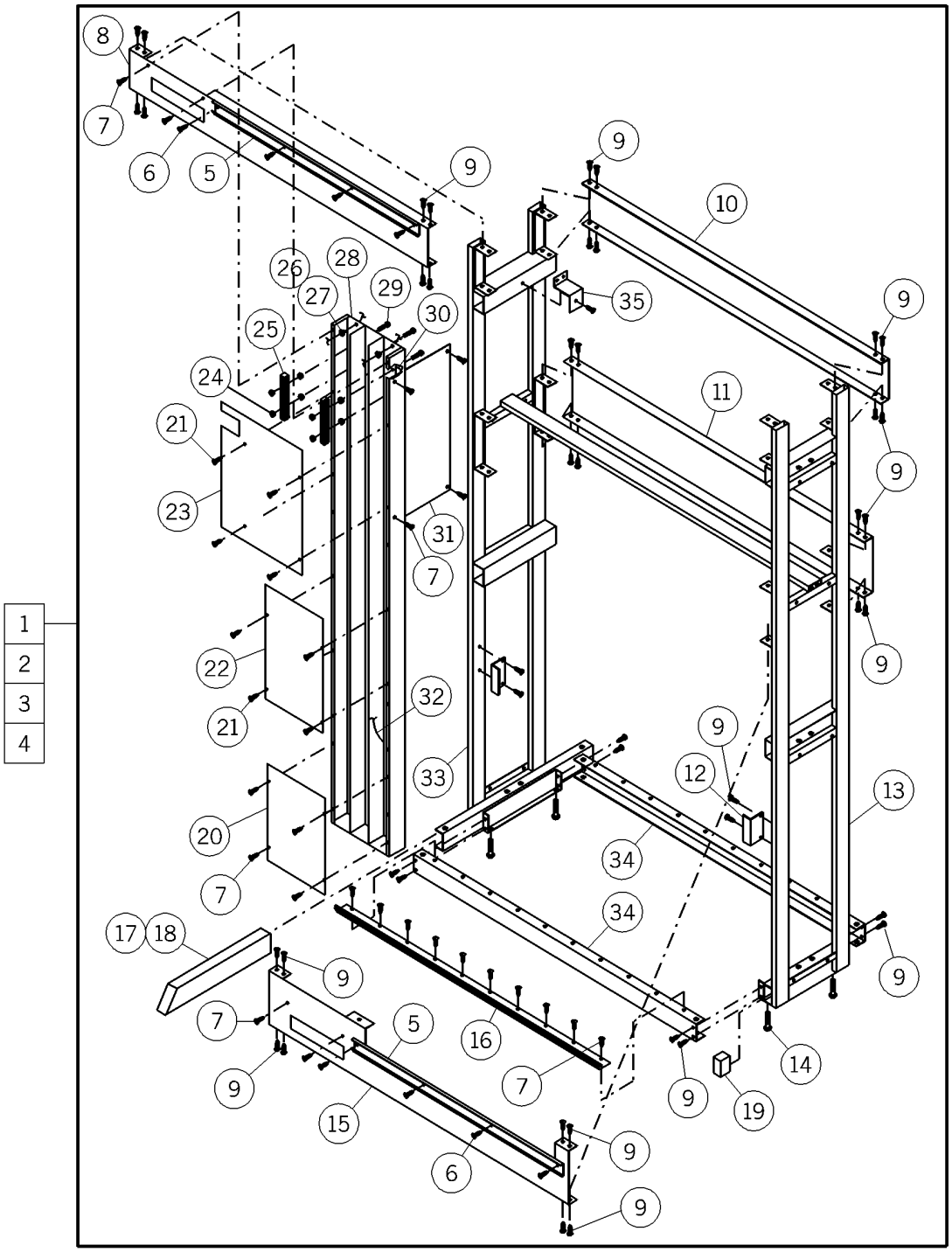

m238_010

Table 5-4. Three Foot Chase Frame Assembly, Level III Single Sided

Item Number	Part Number	Quantity	Description
1	10015052 (1001)	1	Chase frame assembly, rh level III, single sided (in series)
2	10015053 (1001)	1	Chase frame assembly, lh level III, single sided (in series)
3	10015055 (1001)	1	Chase frame assembly, rh level III, single sided (stand-alone)
4	10015056 (1001)	1	Chase frame assembly, lh level III, single sided (stand-alone)
5	54660 (1001)	2	Hanger with chase
6	54095 (1001)	8	Screw
7	393 (1001)	24	Screw
8	53095-01 (1001) or 5309502 (1001)	1 1	Frame-top raceway - painted (used on 10015052 and 55) Frame-top raceway - painted (used on 10015053 and 56)
9	53244-04 (1001)	46 or 44	Screw (used on 10015052 and 53) Screw (used on 10015055 and 56)
10	52735 (1001)	1	Frame-top raceway - painted
11	54568 (1001)	1	Frame center raceway
12	52853 (1001)	2	Door bracket
13	5277304 (1001)	1	End assembly, free standing (used with 10015052 and 53)
14	52872 (1001)	4	Leveling screw
15	5356601 (1001) or 5356602 (1001)	1 1	Brace assembly, raceway center rh (used on 10015052 and 55) Brace assembly, raceway center lh (used on 10015053 and 56)
16	52903 (1001)	1	Bracket - hose panel
17	52926 (1001)	1 or 2	Leg (used on 10015052 and 53) Leg (used on 10015055 and 56)
18	53025 (1001)	1	Boot
19	53176-39 (1001)	1	Plug cap (if required)

Item Number	Part Number	Quantity	Description
20	56372 (1001)	1	Junction box plate
21	53125-01 (1001)	8	Screw
22	52788 (1001)	1	Front plate
23	52920 (1001)	1	Cover plate
24	15250 (1001)	8	Locknut, washer base
25	56551 (1001)	2	Ground bar
26	18148 (1001)	2	Snap bushing
27	54133-09 (1001)	1	Lead wire, green - 9"
28	56391 (1001)	1	Chase assembly
29	52243-07 (1001)	4	Screw
30	32112 (1001)	1	Reference ground label
31	56517 (1001)	1	Filler single
32	51259-48 (1001)	1	Lead wire, green
33	5277302 (1001) or 5277303 (1001)	1 1	End assembly, rh (used on 10015052, 55 and 56) End assembly, lh (used on 10015053, 55 and 56)
34	52734 (1001)	2	Frame kickboard
35	56135 (1001)	1	Chase panel bracket

NOTES:

Three Foot Chase Frame Assembly, Level III Double Sided

Figure 5-6. Three Foot Chase Frame Assembly, Level III Double Sided

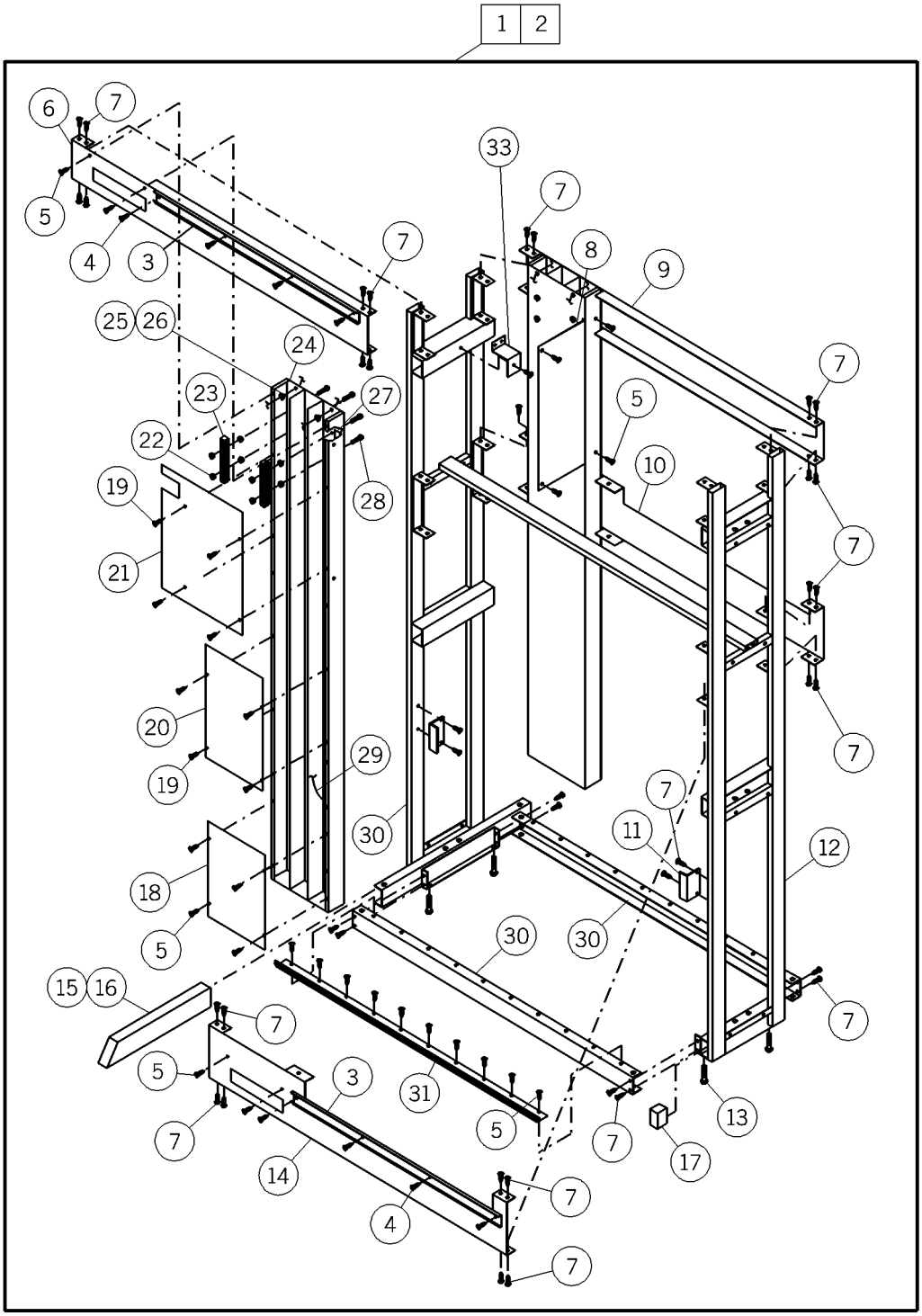

m238_011

Table 5-5. Three Foot Chase Frame Assembly, Level III Double Sided

Item Number	Part Number	Quantity	Description
1	10015051 (1001)	1	Chase frame assembly level III, double sided (in series)
2	10015054 (1001)	1	Chase frame assembly level III, double sided (stand-alone)
3	54660 (1001)	4	Hanger with chase
4	54095 (1001)	16	Screw
5	393 (1001)	48	Screw
6	5309502 (1001)	1	Frame-top raceway - painted (used on 10015051 and 54)
7	53244-04 (1001)	46 or 44	Screw (used on 10015051) Screw (used on 10015054)
8	56516 (1001)	1	Filler double
9	5309501 (1001)	1	Frame-top raceway - painted (used on 10015051 and 54)
10	5356601 (1001)	1	Brace assembly, raceway center rh (used on 10015051 and 54)
11	52853 (1001)	4	Door bracket
12	5277304 (1001) or 5277301 (1001)	1 1	End assembly, free standing (used on 10015051) End assembly (used on 10015051 and 54)
13	52872 (1001)	4	Leveling screw
14	5356602 (1001)	1	Brace assembly, raceway center lh (used on 10015051 and 54)
15	52926 (1001)	2 or 4	Leg (used on 10015051) Leg (used on 10015054)
16	53025 (1001)	1	Boot
17	53176-39 (1001)	1	Plug cap (if required)
18	56372 (1001)	2	Junction box plate
19	53125-01 (1001)	16	Screw
20	52788 (1001)	2	Front plate

Item Number	Part Number	Quantity	Description
21	52920 (1001)	2	Cover plate
22	15250 (1001)	16	Locknut, washer base
23	56551 (1001)	4	Ground bar
24	56391 (1001)	2	Chase assembly
25	18148 (1001)	4	Snap bushing
26	54133-09 (1001)	2	Lead wire, green - 9"
27	32112 (1001)	2	Reference ground label
28	52243-07 (1001)	8	Screw
29	51259-48 (1001)	2	Lead wire, green
30	5277301 (1001)	1	End assembly (used on 10015054)
31	52903 (1001)	2	Bracket - hose panel
32	52734 (1001)	2	Frame kickboard
33	56135 (1001)	1	Chase panel bracket

NOTES:

Four Foot Chase Frame Assembly, Level II Single Sided

Figure 5-7. Four Foot Chase Frame Assembly, Level II Single Sided

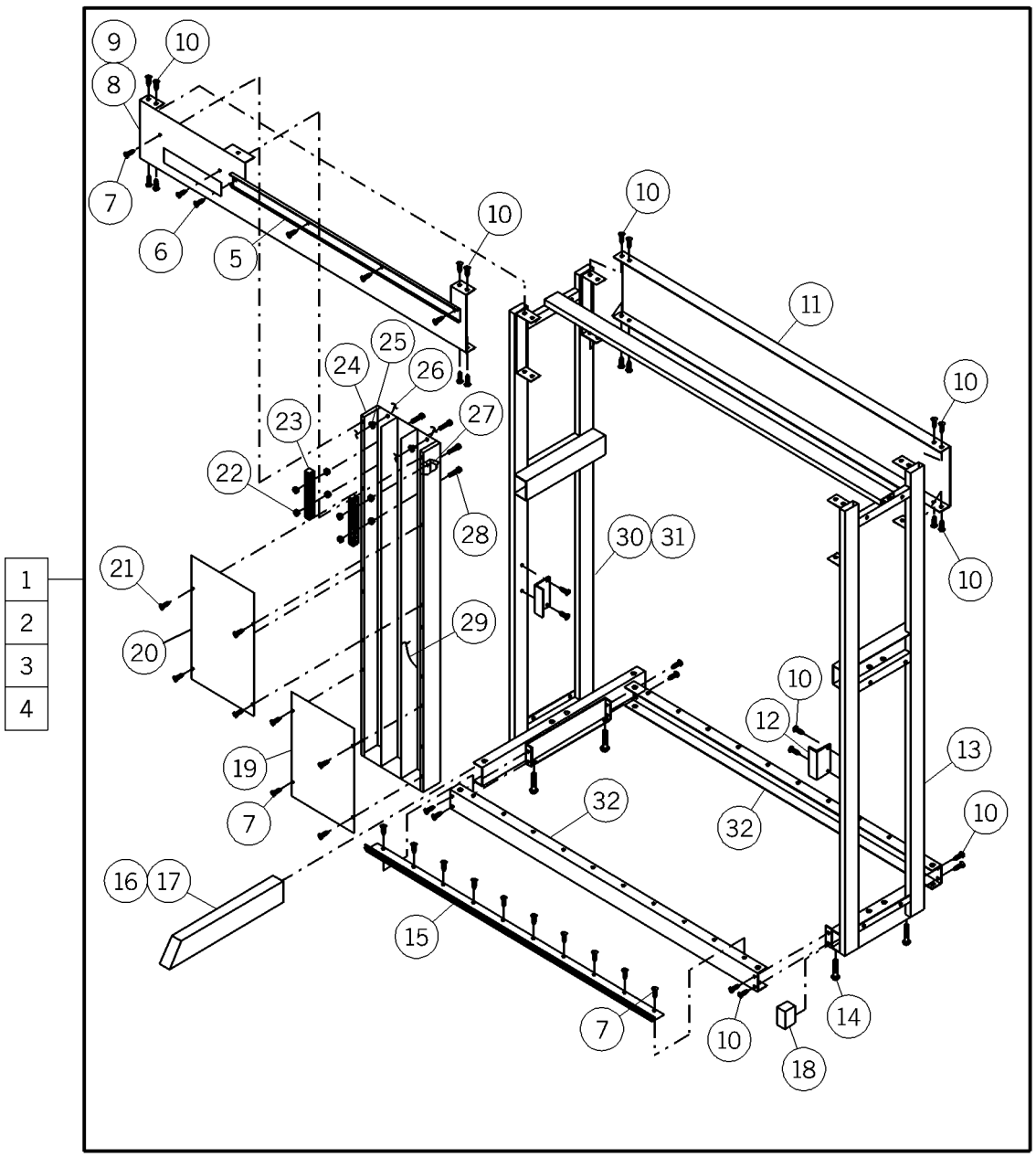

m238_008

Table 5-6. Four Foot Chase Frame Assembly, Level II Single Sided

Item Number	Part Number	Quantity	Description
1	10015022 (1001)	1	Chase frame assembly, rh level II, single sided (in series)
2	10015023 (1001)	1	Chase frame assembly, lh level II, single sided (in series)
3	10015025 (1001)	1	Chase frame assembly, rh level II, single sided (stand-alone)
4	10015026 (1001)	1	Chase frame assembly, lh level II, single sided (stand-alone)
5	54660 (1001)	1	Hanger with chase
6	54095 (1001)	4	Screw
7	393 (1001)	23	Screw
8	5356601 (1001)	1	Brace assembly, raceway center rh (used on 10015022 and 25)
9	5356602 (1001)	1	Brace assembly, raceway center lh (used on 10015023 and 26)
10	53244-04 (1001)	30	Screw
11	54568 (1001)	1	Frame center raceway
12	52853 (1001)	2	Door bracket
13	54585 (1001)	1	End assembly, free standing (used on 10015022 and 23)
14	52872 (1001)	4	Leveling screw
15	52903 (1001)	1	Bracket - hose panel
16	52926 (1001)	1 or 2	Leg (used on 10015042 and 43) Leg (used on 10015045 and 46)
17	53025 (1001)	1	Boot
18	53176-39 (1001)	1	Plug cap (if required)
19	53134 (1001)	1	Cover plate
20	5278839 (1001)	1	Front plate
21	53125-01 (1001)	4	Screw
22	15250 (1001)	10	Locknut, washer base
23	56551 (1001)	2	Ground bar
24	56393 (1001)	1	Chase assembly

Item Number	Part Number	Quantity	Description
25	18148 (1001)	2	Snap bushing
26	54133-09 (1001)	1	Lead wire, green - 9"
27	32112 (1001)	1	Reference ground label
28	52243-07 (1001)	5	Screw
29	51259-48 (1001)	1	Lead wire, green
30	5458301 (1001)	1	End assembly, rh (used on 10015022, 25 and 26)
31	5458302 (1001)	1	End assembly, lh (used on 10015023, 25 and 26)
32	52734 (1001)	2	Frame kickboard

NOTES:

Four Foot Chase Frame Assembly, Level II Double Sided

Figure 5-8. Four Foot Chase Frame Assembly, Level II Double Sided

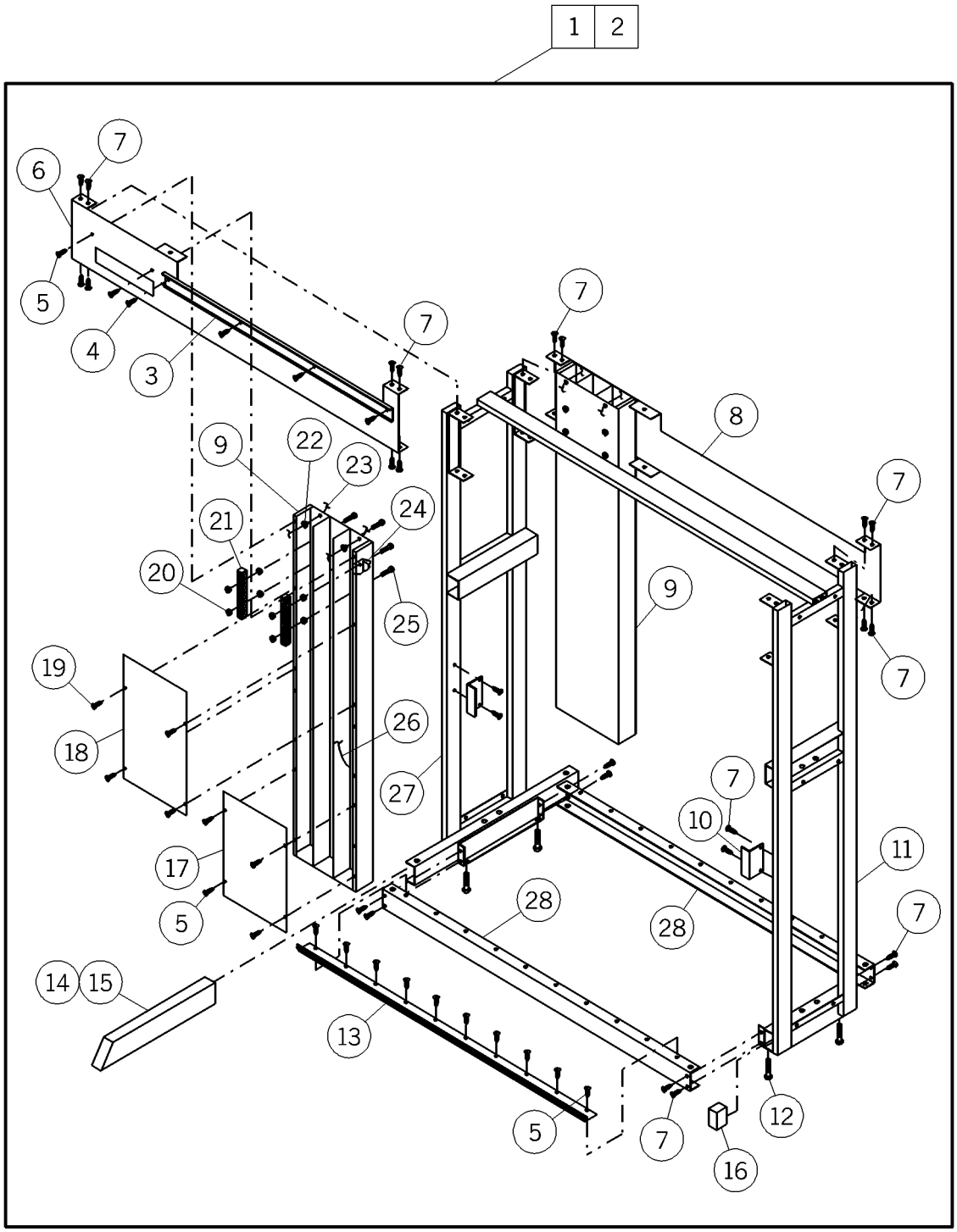

m238_009

Table 5-7. Four Foot Chase Frame Assembly, Level II Double Sided

Item Number	Part Number	Quantity	Description
1	10015021 (1001)	1	Chase frame assembly level II, double sided (in series)
2	10015024 (1001)	1	Chase frame assembly level II, double sided (stand-alone)
3	54660 (1001)	2	Hanger with chase
4	54095 (1001)	8	Screw
5	393 (1001)	46	Screw
6	5356602 (1001)	1	Brace assembly, raceway center lh (used on 10015021 and 24)
7	53244-04 (1001)	32	Screw
8	5356601 (1001)	1	Brace assembly, raceway center rh (used on 10015021 and 24)
9	56393 (1001)	2	Chase assembly
10	52853 (1001)	4	Door bracket
11	54585 (1001) or 54582 (1001)	1 1	End assembly, free standing (used on 10015021) End assembly, double (used on 10015024)
12	52872 (1001)	4	Leveling screw
13	52903 (1001)	2	Bracket - hose panel
14	52926 (1001)	2 or 4	Leg (used on 10015041) Leg (used on 10015044)
15	53025 (1001)	1	Boot
16	53176-39 (1001)	1	Plug cap (if required)
17	53134 (1001)	2	Cover plate
18	5278839 (1001)	2	Front plate
19	53125-01 (1001)	8	Screw
20	15250 (1001)	20	Locknut, washer base
21	56551 (1001)	4	Ground bar
22	18148 (1001)	4	Snap bushing
23	54133-09 (1001)	2	Lead wire, green - 9"
24	32112 (1001)	2	Reference ground label

Item Number	Part Number	Quantity	Description
25	52243-07 (1001)	10	Screw
26	51259-48 (1001)	2	Lead wire, green
27	54582 (1001)	1	End assembly, double (used on 10015021 and 24)
28	52734 (1001)	2	Frame kickboard

NOTES:

Four Foot Chase Frame Assembly, Level III Single Sided

Figure 5-9. Four Foot Chase Frame Assembly, Level III Single Sided

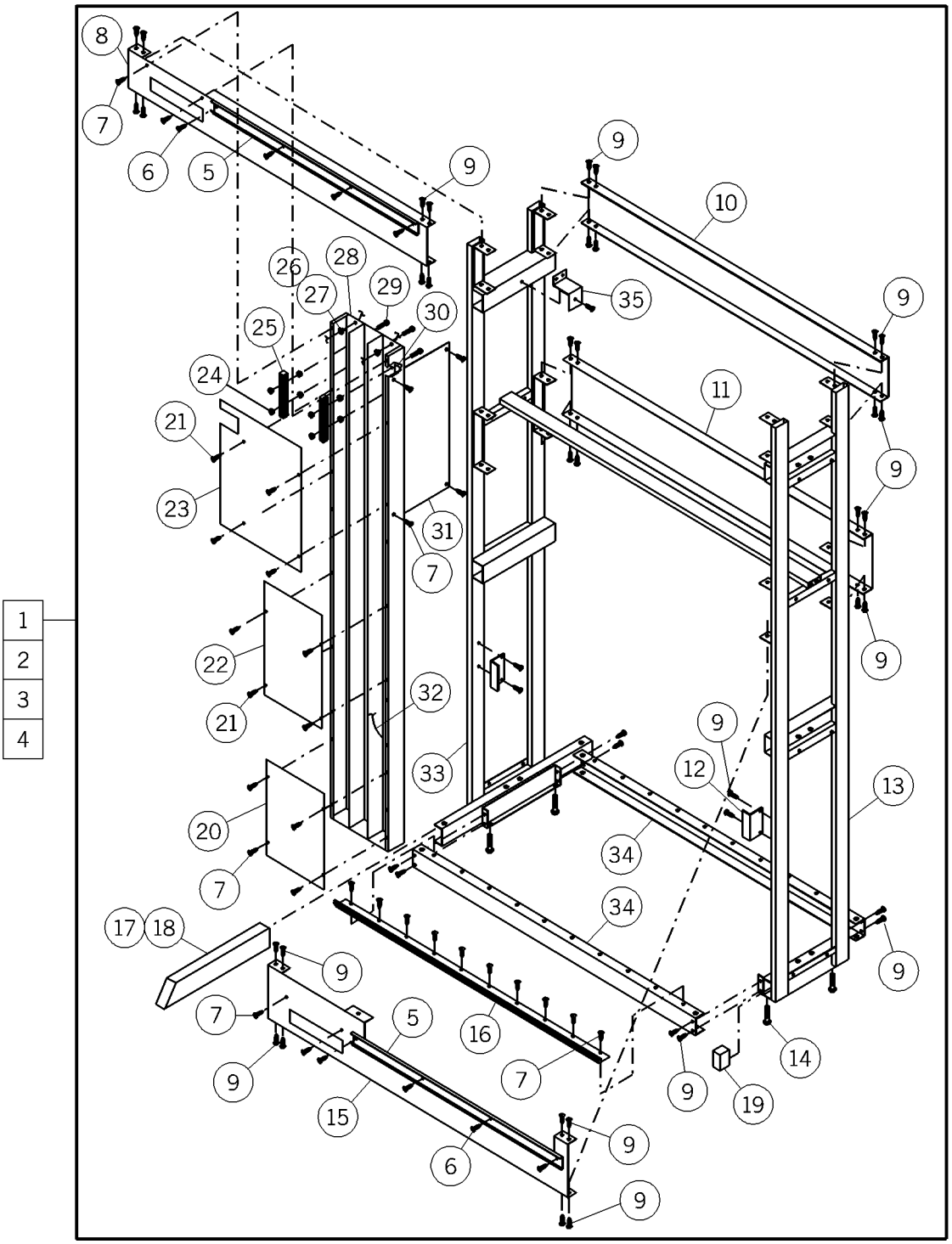

Table 5-8. Four Foot Chase Frame Assembly, Level III Single Sided

Item Number	Part Number	Quantity	Description
1	10015032 (1001)	1	Chase frame assembly, rh level III, single sided (in series)
2	10015033 (1001)	1	Chase frame assembly, lh level III, single sided (in series)
3	10015035 (1001)	1	Chase frame assembly, rh level III, single sided (stand-alone)
4	10015036 (1001)	1	Chase frame assembly, lh level III, single sided (stand-alone)
5	54660 (1001)	2	Hanger with chase
6	54095 (1001)	8	Screw
7	393 (1001)	21	Screw
8	5309501 (1001) or 5309502 (1001)	1 1	Frame-top raceway - painted (used on 10015032 and 35) Frame-top raceway - painted (used on 10015033 and 36)
9	53244-04 (1001)	46 or 44	Screw (used on 10015052 and 53) Screw (used on 10015055 and 56)
10	52735 (1001)	1	Frame-top raceway - painted
11	54568 (1001)	1	Frame center raceway
12	52853 (1001)	2	Door bracket
13	5277304 (1001)	1	End assembly, free standing (used with 10015032 and 33)
14	52872 (1001)	4	Leveling screw
15	5356601 (1001) or 5356602 (1001)	1 1	Brace assembly, raceway center rh (used on 10015032 and 35) Brace assembly, raceway center lh (used on 10015033 and 36)
16	52903 (1001)	1	Bracket - hose panel
17	52926 (1001)	1 or 2	Leg (used on 10015032 and 33) Leg (used on 10015035 and 36)
18	53025 (1001)	1	Boot
19	53176-39 (1001)	1	Plug cap (if required)

Item Number	Part Number	Quantity	Description
20	53134 (1001)	1	Cover plate
21	53125-01 (1001)	8	Screw
22	5278839 (1001)	1	Front plate
23	52920 (1001)	1	Cover plate
24	15250 (1001)	10	Locknut, washer base
25	56551 (1001)	2	Ground bar
26	18148 (1001)	2	Snap bushing
27	54133-09 (1001)	1	Lead wire, green - 9"
28	5654239 (1001)	1	Chase assembly
29	52243-07 (1001)	5	Screw
30	32112 (1001)	1	Reference ground label
31	56517 (1001)	1	Filler single
32	51259-48 (1001)	1	Lead wire, green
33	5277302 (1001) or 5277303 (1001)	1 1	End assembly, rh (used on 10015032, 35 and 36) End assembly, lh (used on 10015033, 35 and 36)
34	52734 (1001)	2	Frame kickboard
35	56135 (1001)	1	Chase panel bracket

NOTES:

Four Foot Chase Frame Assembly, Level III Double Sided

Figure 5-10. Four Foot Chase Frame Assembly, Level III Double Sided

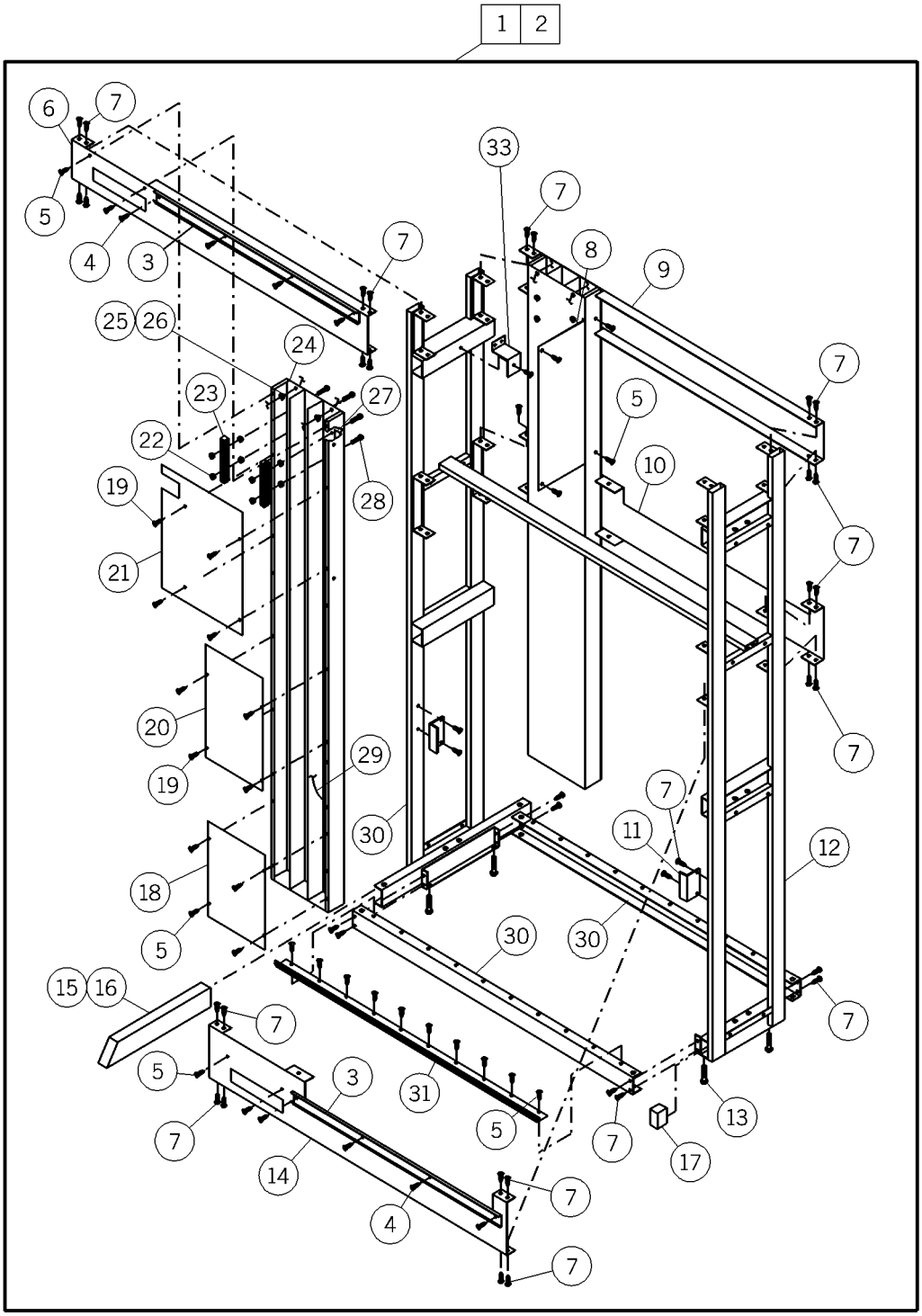

m238_011

Table 5-9. Four Foot Chase Frame Assembly, Level III Double Sided

Item Number	Part Number	Quantity	Description
1	10015031 (1001)	1	Chase frame assembly level III, double sided (in series)
2	10015034 (1001)	1	Chase frame assembly level III, double sided (stand-alone)
3	54660 (1001)	4	Hanger with chase
4	54095 (1001)	16	Screw
5	393 (1001)	44	Screw
6	5309502 (1001)	1	Frame-top raceway - painted (used on 10015031 and 34)
7	53244-04 (1001)	48 or 44	Screw (used on 10015031) Screw (used on 10015034)
8	56516 (1001)	1	Filler double
9	5309501 (1001)	1	Frame-top raceway - painted (used on 10015031 and 34)
10	5356601 (1001)	1	Brace assembly, raceway center rh (used on 10015031 and 34)
11	52853 (1001)	4	Door bracket
12	5277304 (1001) or 5277301 (1001)	1 1	End assembly, free standing (used on 10015031) End assembly (used on 10015031 and 34)
13	52872 (1001)	4	Leveling screw
14	5356602 (1001)	1	Brace assembly, raceway center lh (used on 10015031 and 34)
15	52926 (1001)	2 or 4	Leg (used on 10015031) Leg (used on 10015034)
16	53025 (1001)	1	Boot
17	53176-39 (1001)	1	Plug cap (if required)
18	53134 (1001)	2	Cover plate
19	53125-01 (1001)	16	Screw
20	52788 (1001)	2	Front plate

Item Number	Part Number	Quantity	Description
21	52920 (1001)	2	Cover plate
22	15250 (1001)	20	Locknut, washer base
23	56551 (1001)	4	Ground bar
24	5654239 (1001)	2	Chase assembly
25	18148 (1001)	4	Snap bushing
26	54133-09 (1001)	2	Lead wire, green - 9"
27	32112 (1001)	2	Reference ground label
28	52243-07 (1001)	10	Screw
29	51259-48 (1001)	2	Lead wire, green
30	5277301 (1001)	1	End assembly, double (used on 10015034)
31	52903 (1001)	2	Bracket - hose panel
32	52734 (1001)	2	Frame kickboard
33	56135 (1001)	1	Chase panel bracket

NOTES:

Three Foot Outrigger Frame Assembly, Level II Single and Double Sided

Figure 5-11. Three Foot Outrigger Frame Assembly, Level II Single and Double Sided

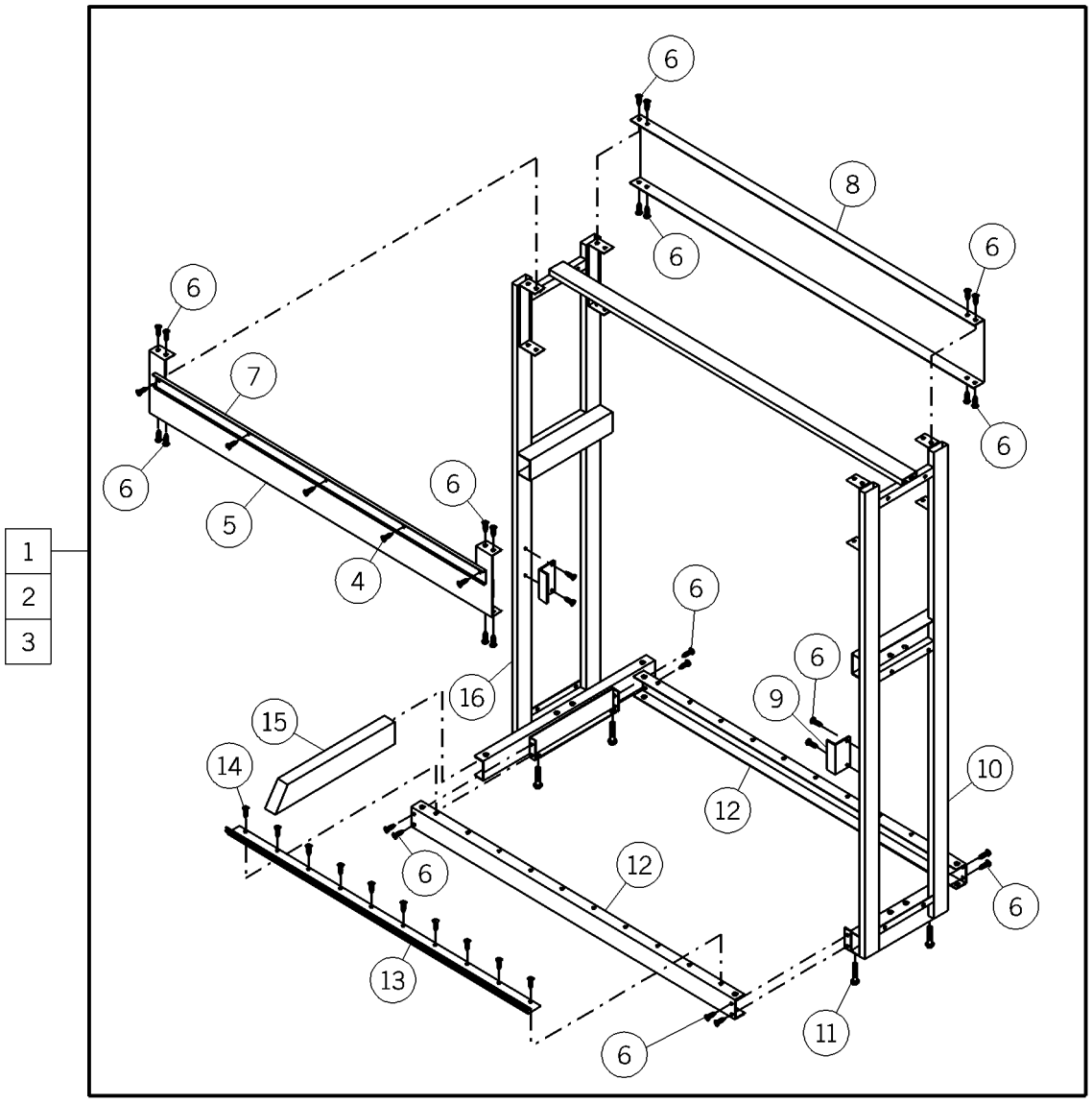

m238_014

Table 5-10. Three Foot Outrigger Frame Assembly, Level II Single and Double Sided

Item Number	Part Number	Quantity	Description
1	10015128 (1001)	1	Outrigger frame assembly, level II double sided
2	10015129 (1001)	1	Outrigger frame assembly, rh level II single sided
3	10015130 (1001)	1	Outrigger frame assembly, lh level II single sided
4	54095 (1001)	4 or 8	Screw (used on 10015129 and 30) Screw (used on 10015128)
5	535670139 (1001)	1 or 2	Brace assembly 3’ (used on 10015129 and 30) Brace assembly’ (used on 10015128)
6	53244-04 (1001)	30 or 32	Screw (used on 10015129 and 30) Screw (used on 10015128)
7	54955 (1001)	1 or 2	Hanger, without chase 3’ (used on 10015129 and 30) Hanger, without chase 3’ (used on 10015128)
8	5460839 (1001)	1	Frame center raceway (used on 10015129 and 30)
9	52853 (1001)	2 or 4	Door bracket (used on 10015129 and 30) Door bracket (used on 10015128)
10	54585 (1001)	1	End assembly, free standing
11	52872 (1001)	4	Leveling screw
12	52822 (1001)	2	Frame kickboard
13	52902 (1001)	1 or 2	Bracket - hose panel (used on 10015129 and 30) Bracket - hose panel (used on 10015128)

Item Number	Part Number	Quantity	Description
14	393 (1001)	7 or 14	Screw (used on 10015129 and 30) Screw (used on 10015128)
15	52926 (1001)	1 or 2	Leg (used on 10015129 and 30) Leg (used on 10015128)
16	5458302 (1001) or 5458301 (1001) or 54582 (1001)	1 1 1	End assembly, lh (used on 10015130) End assembly, rh (used on 10015129) End assembly, double (used on 10015128)

NOTES:

Three Foot Outrigger Frame Assembly, Level III Single and Double Sided

Figure 5-12. Three Foot Outrigger Frame Assembly, Level III Single and Double Sided

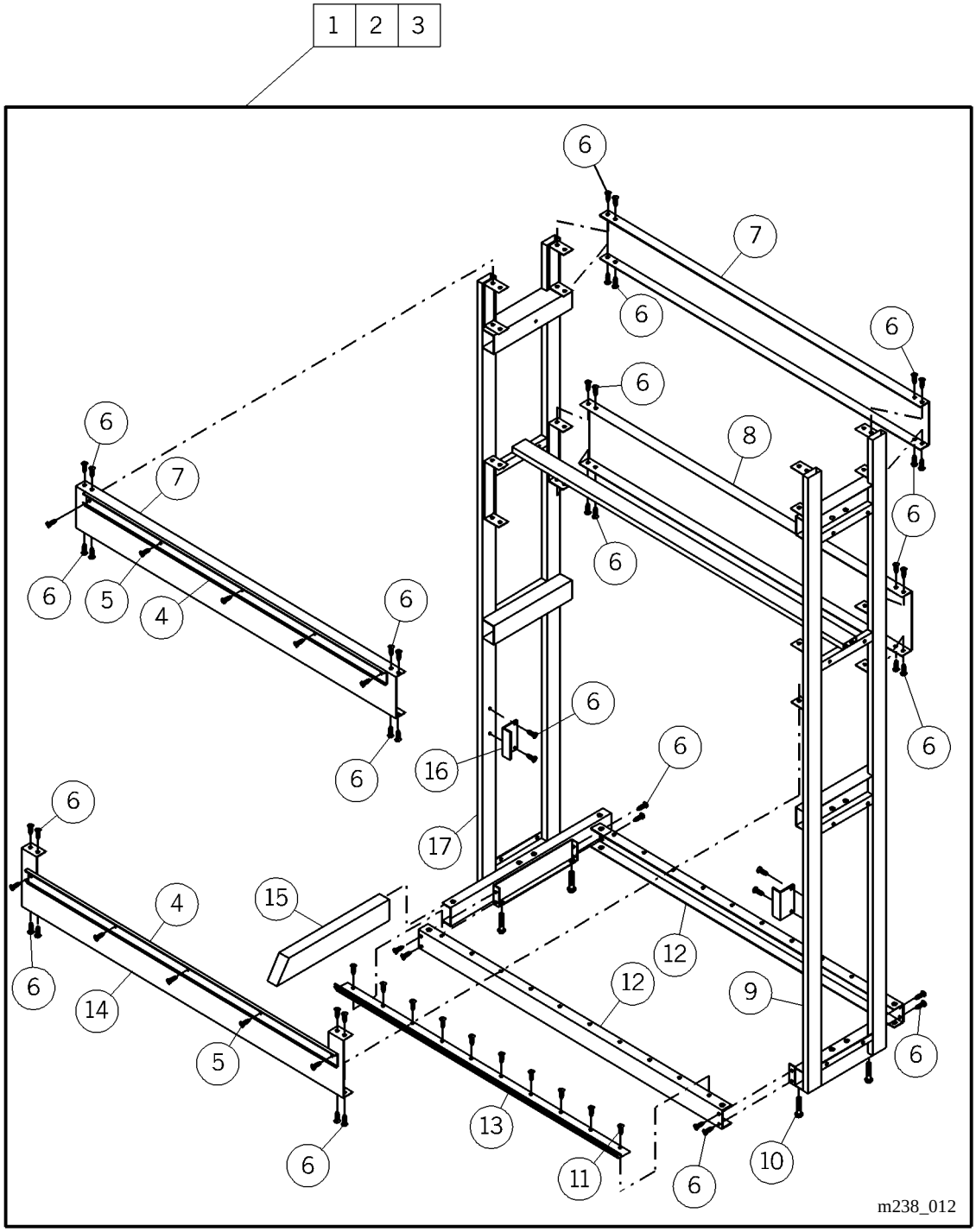

Table 5-11. Three Foot Outrigger Frame Assembly, Level III Single and Double Sided

Item Number	Part Number	Quantity	Description
1	10015138 (1001)	1	Outrigger frame assembly, level III double sided
2	10015139 (1001)	1	Outrigger frame assembly, rh level III single sided
3	10015140 (1001)	1	Outrigger frame assembly, lh level III single sided
4	54955 (1001)	2 or 4	Hanger, without chase 3’ (used on 10015139 and 40) Hanger, without chase 3’ (used on 10015138)
5	54095 (1001)	8 or 16	Screw (used on 10015139 and 40) Screw (used on 10015138)
6	53244-04 (1001)	46 or 48	Screw (used on 10015139 and 40) Screw (used on 10015138)
7	52825 (1001)	2	Frame-top raceway
8	5460839 (1001)	1	Frame center raceway (used on 10015139 and 40)
9	5277304 (1001)	1	End assembly, free standing
10	52872 (1001)	4	Leveling screw
11	393 (1001)	7 or 14	Screw (used on 10015139 and 40) Screw (used on 10015138)
12	52822 (1001)	2	Frame kickboard
13	52902 (1001)	1 or 2	Bracket - hose panel (used on 10015139 and 40) Bracket - hose panel (used on 10015138)
14	535670139 (1001)	1 or 2	Brace assembly 3’ (used on 10015139 and 40) Brace assembly 3’ (used on 10015138)

Item Number	Part Number	Quantity	Description
15	52926 (1001)	1 or 2	Leg (used on 10015139 and 40) Leg (used on 10015138)
16	52853 (1001)	2 or 4	Door bracket (used on 10015139 and 40) Door bracket (used on 10015138)
17	5277303 (1001) or 5277302 (1001) or 5277301 (1001)	1 1 1	End assembly, lh (used on 10015140) End assembly, rh (used on 10015139) End assembly (used on 10015138)

NOTES:

Four Foot Outrigger Frame Assembly, Level II Single and Double Sided

Figure 5-13. Four Foot Outrigger Frame Assembly, Level II Single and Double Sided

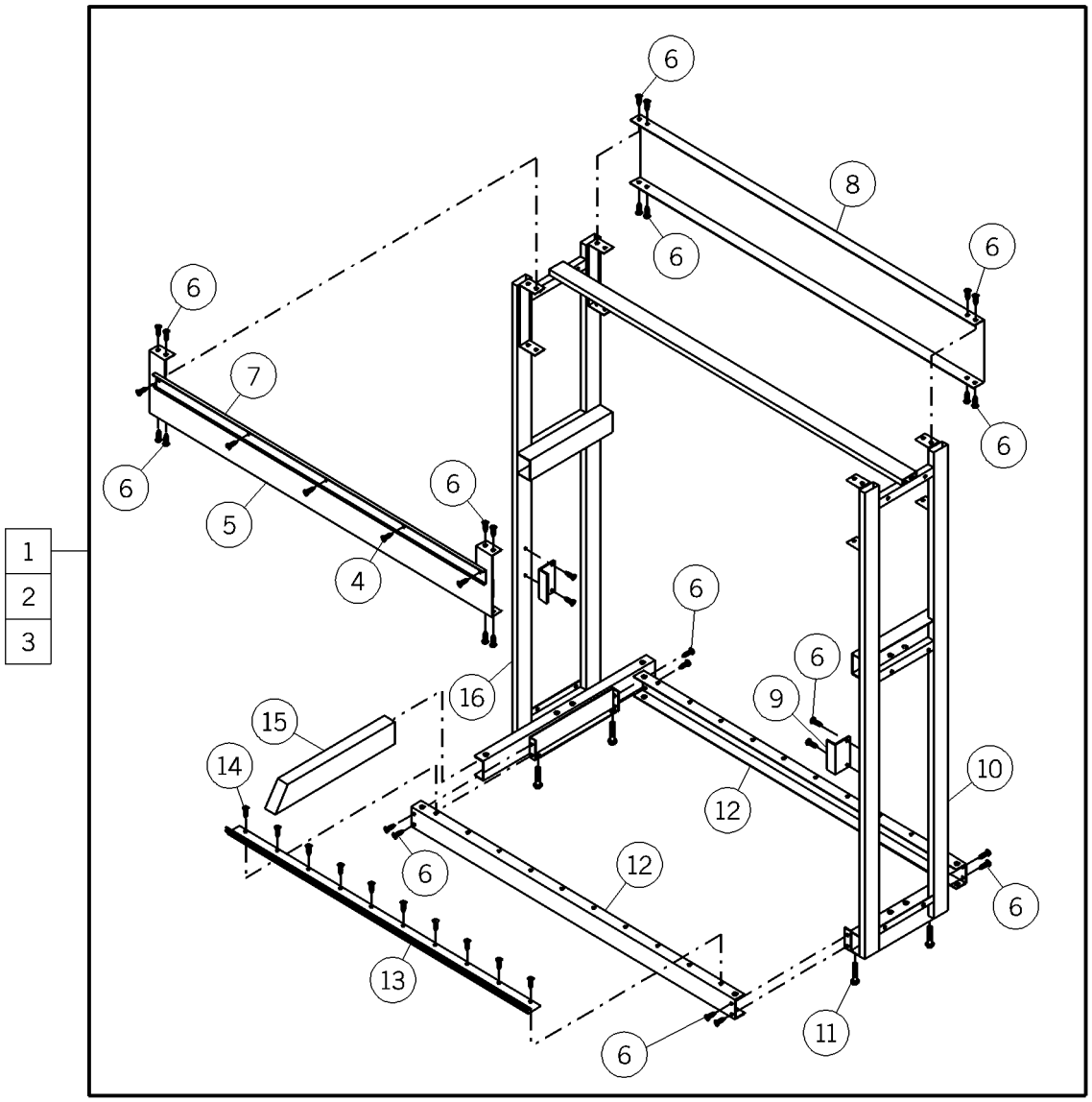

m238_014

Table 5-12. 4' Outrigger Frame Assembly, Level II Single and Double Sided

Item Number	Part Number	Quantity	Description
1	10015123 (1001)	1	Outrigger frame assembly, level II double sided
2	10015126 (1001)	1	Outrigger frame assembly, rh level II single sided
3	10015127 (1001)	1	Outrigger frame assembly, lh level II single sided
4	54095 (1001)	5 or 10	Screw (used on 10015126 and 27) Screw (used on 10015123)
5	53567-02 (1001)	1 or 2	Brace assembly 4' (used on 10015126 and 27) Brace assembly 4' (used on 10015123)
6	53244-04 (1001)	30 or 32	Screw (used on 10015126 and 27) Screw (used on 10015123)
7	54954 (1001)	1 or 2	Hanger, without chase 4' (used on 10015126 and 27) Hanger, without chase 4' (used on 10015123)
8	54568 (1001)	1	Frame center raceway (used on 10015126 and 27)
9	52853 (1001)	2 or 4	Door bracket (used on 10015126 and 27) Door bracket (used on 10015123)
10	54585 (1001)	1	End assembly, free standing
11	52872 (1001)	4	Leveling screw
12	52734 (1001)	2	Frame kickboard
13	52903 (1001)	1 or 2	Bracket - hose panel (used on 10015126 and 27) Bracket - hose panel (used on 10015123)

Item Number	Part Number	Quantity	Description
14	393 (1001)	10 or 20	Screw (used on 10015126 and 27) Screw (used on 10015123)
15	52926 (1001)	1 or 2	Leg (used on 10015126 and 27) Leg (used on 10015123)
16	5458302 (1001) or 5458301 (1001) or 54582 (1001)	1 1 1	End assembly, lh (used on 10015127) End assembly, rh (used on 10015126) End assembly, double (used on 10015123)

NOTES:

Four Foot Outrigger Frame Assembly, Level III Single and Double Sided

Figure 5-14. Four Foot Outrigger Frame Assembly, Level III Single and Double Sided

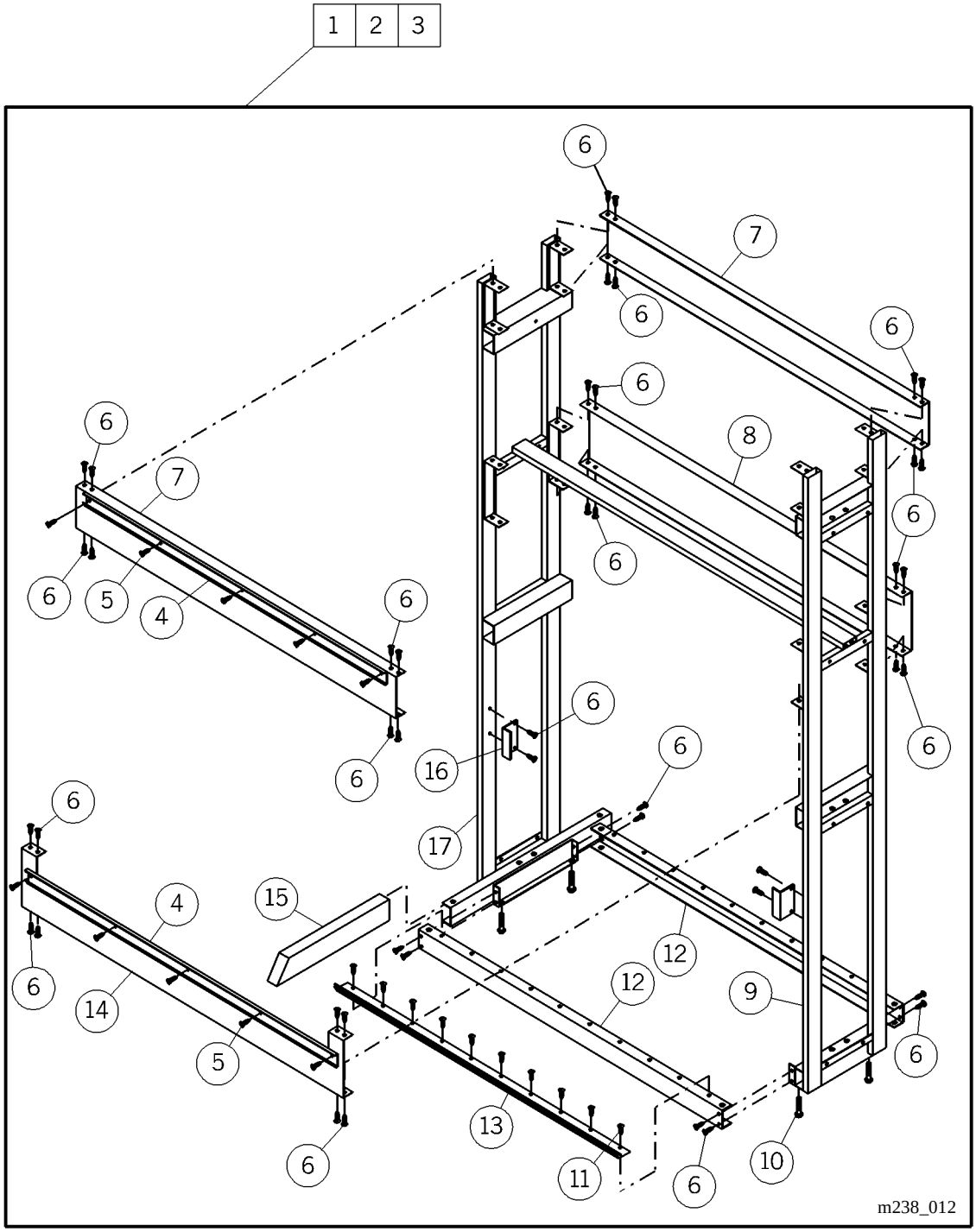

Table 5-13. Four Foot Outrigger Frame Assembly, Level III Single and Double Sided

Item Number	Part Number	Quantity	Description
1	10015133 (1001)	1	Outrigger frame assembly, level III double sided
2	10015136 (1001)	1	Outrigger frame assembly, rh level III single sided
3	10015137 (1001)	1	Outrigger frame assembly, lh level III single sided
4	54954 (1001)	2 or 4	Hanger, without chase 4’ (used on 10015136 and 37) Hanger, without chase 4’ (used on 10015133)
5	54095 (1001)	10 or 20	Screw (used on 10015136 and 37) Screw (used on 10015133)
6	53244-04 (1001)	46 or 48	Screw (used on 10015136 and 37) Screw (used on 10015133)
7	52735 (1001)	2	Frame-top raceway
8	54568 (1001)	1	Frame center raceway (used on 10015136 and 37)
9	5277304 (1001)	1	End assembly, free standing
10	52872 (1001)	4	Leveling screw
11	393 (1001)	10 or 20	Screw (used on 10015136 and 37) Screw (used on 10015133)
12	52734 (1001)	2	Frame kickboard
13	52903 (1001)	1 or 2	Bracket - hose panel (used on 10015136 and 37) Bracket - hose panel (used on 10015133)
14	53567-02 (1001)	1 or 2	Brace assembly 4’ (used on 10015136 and 37) Brace assembly 4’ (used on 10015133)

Item Number	Part Number	Quantity	Description
15	52926 (1001)	1 or 2	Leg (used on 10015136 and 37) Leg (used on 10015133)
16	52853 (1001)	2 or 4	Door bracket (used on 10015136 and 37) Door bracket (used on 10015133)
17	5277303 (1001) or 5277302 (1001) or 5277301 (1001)	1 1 1	End assembly, lh (used on 10015137) End assembly, rh (used on 10015136) End assembly, double (used on 10015133)

NOTES:

Three Foot Plain Frame Assembly, Level II Single and Double Sided

Figure 5-15. Three Foot Plain Frame Assembly, Level II Single and Double Sided

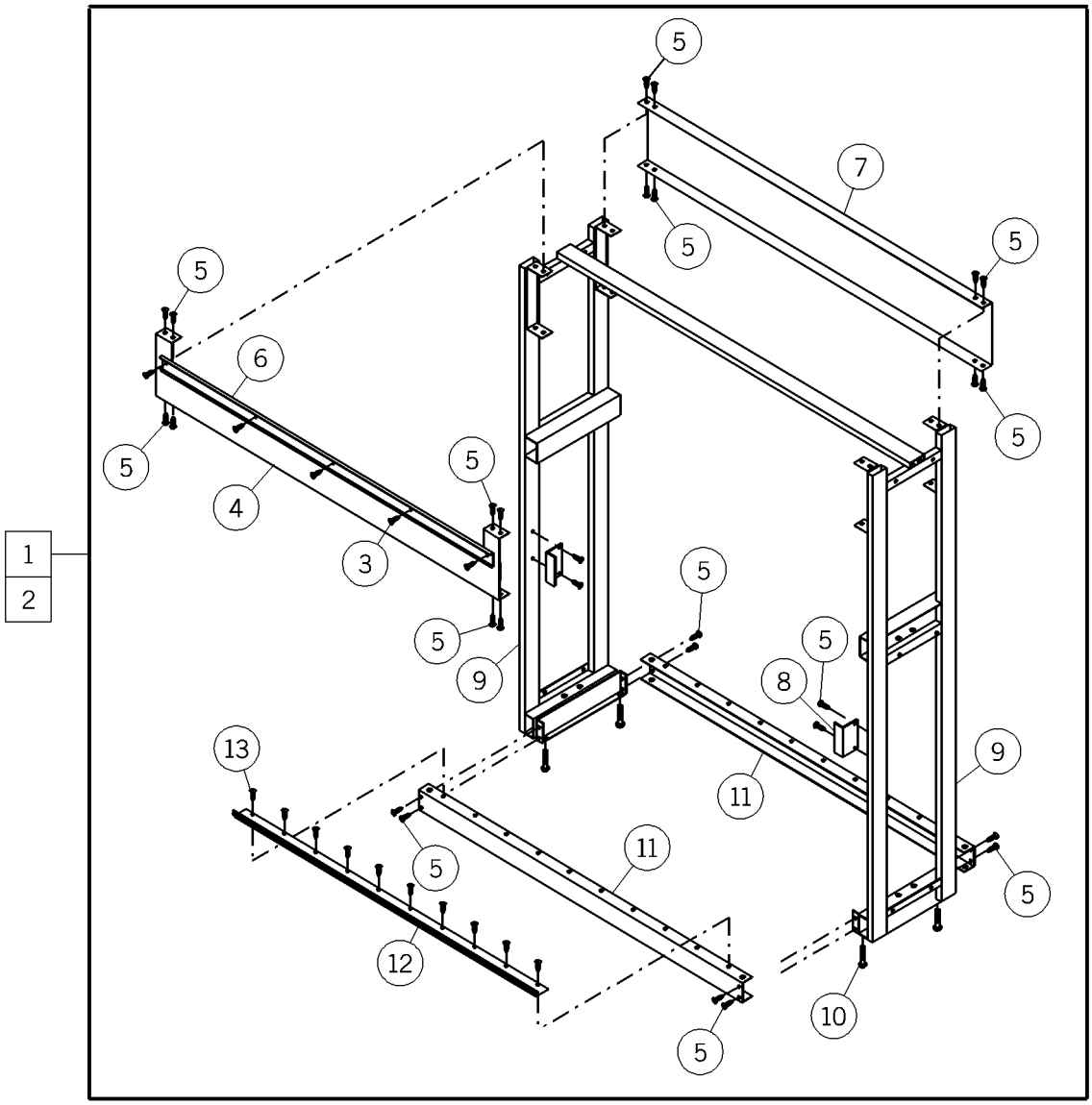

m238_015

Table 5-14. Three Foot Plain Frame Assembly, Level II Single and Double Sided

Item Number	Part Number	Quantity	Description
1	10015122 (1001)	1	Plain frame assembly, level II double sided
2	10015125 (1001)	1	Plain frame assembly, level II single sided
3	54095 (1001)	4 or 8	Screw (used on 10015125) Screw (used on 10015122)
4	535670139 (1001)	1 or 2	Brace assembly 3’ (used on 10015125) Brace assembly 3’ (used on 10015122)
5	53244-04 (1001)	32 or 36	Screw (used on 10015125) Screw (used on 10015122)
6	54955 (1001)	1 or 2	Hanger, without chase 3’ (used on 10015125) Hanger, without chase 3’ (used on 10015122)
7	5460839 (1001)	1	Frame center raceway (used on 10015125)
8	52853 (1001)	2 or 4	Door bracket (used on 10015125) Door bracket (used on 10015122)
9	54585 (1001)	2	End assembly, free standing
10	52872 (1001)	4	Leveling screw
11	52822 (1001)	2	Frame kickboard
12	52902 (1001)	1 or 2	Bracket - hose panel (used on 10015125) Bracket - hose panel (used on 10015122)
13	393 (1001)	7 or 14	Screw (used on 10015125) Screw (used on 10015122)

Three Foot Plain Frame Assembly, Level III Single and Double Sided

Figure 5-16. Three Foot Plain Frame Assembly, Level III Single and Double Sided

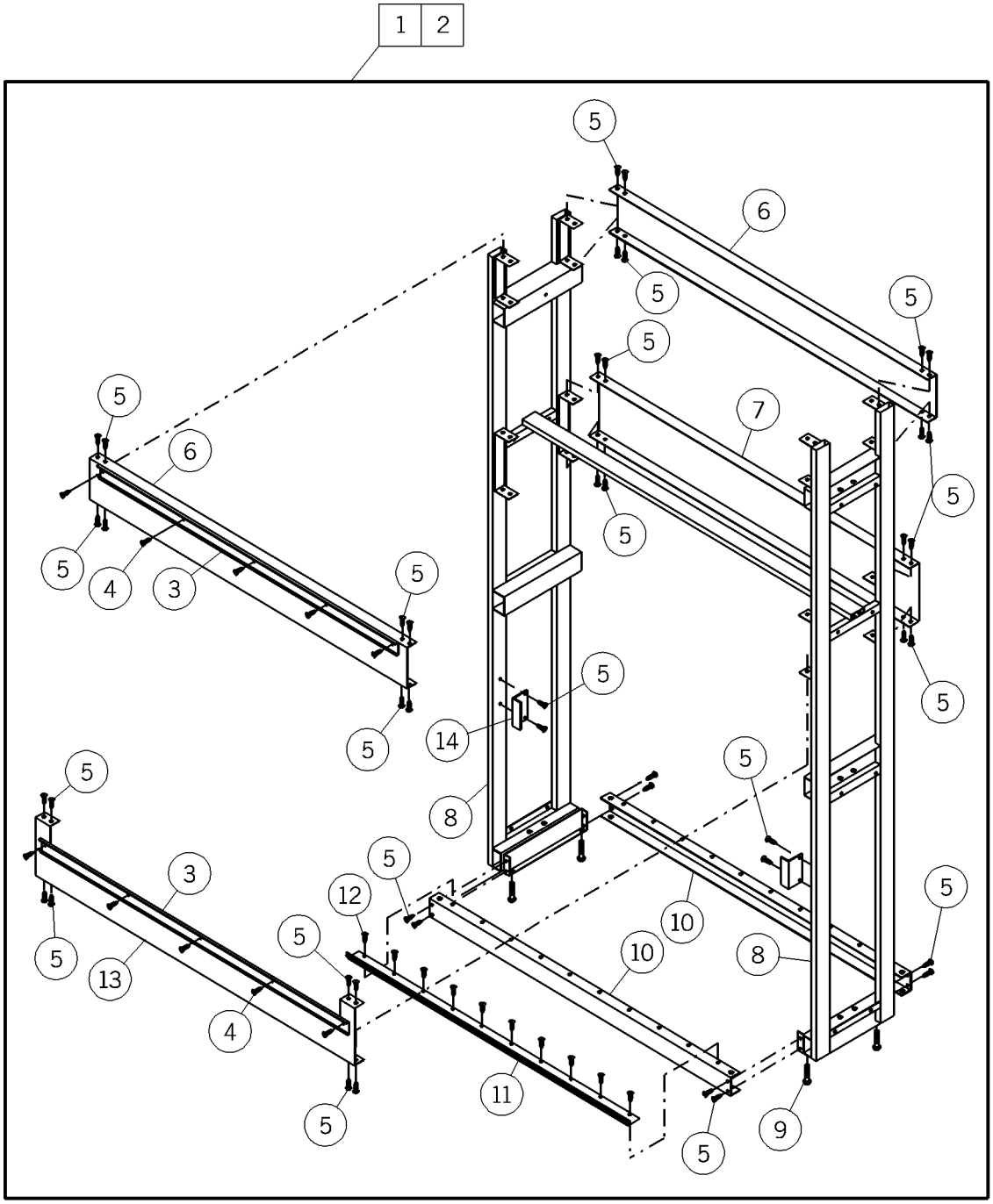

m238_013

Table 5-15. Three Foot Plain Frame Assembly, Level III Single and Double Sided

Item Number	Part Number	Quantity	Description
1	10015132 (1001)	1	Plain frame assembly, level III double sided
2	10015135 (1001)	1	Plain frame assembly, level III single sided
3	54955 (1001)	2 or 4	Hanger, without chase 3’ (used on 10015135) Hanger, without chase 3’ (used on 10015132)
4	54095 (1001)	8 or 16	Screw (used on 10015135) Screw (used on 10015132)
5	53244-04 (1001)	48 or 52	Screw (used on 10015135) Screw (used on 10015132)
6	52825 (1001)	2	Frame-top raceway
7	5460839 (1001)	1	Frame center raceway (used on 10015135)
8	5277304 (1001)	2	End assembly, free standing
9	52872 (1001)	4	Leveling screw
10	52822 (1001)	2	Frame kickboard
11	52902 (1001)	1 or 2	Bracket - hose panel (used on 10015135) Bracket - hose panel (used on 10015132)
12	393 (1001)	7 or 14	Screw (used on 10015135) Screw (used on 10015132)
13	535670139 (1001)	1 or 2	Brace assembly 3’ (used on 10015135) Brace assembly 3’ (used on 10015132)
14	52853 (1001)	2 or 4	Door bracket (used on 10015135) Door bracket (used on 10015132)

Four Foot Plain Frame Assembly, Level II Single and Double Sided

Figure 5-17. Four Foot Plain Frame Assembly, Level II Single and Double Sided

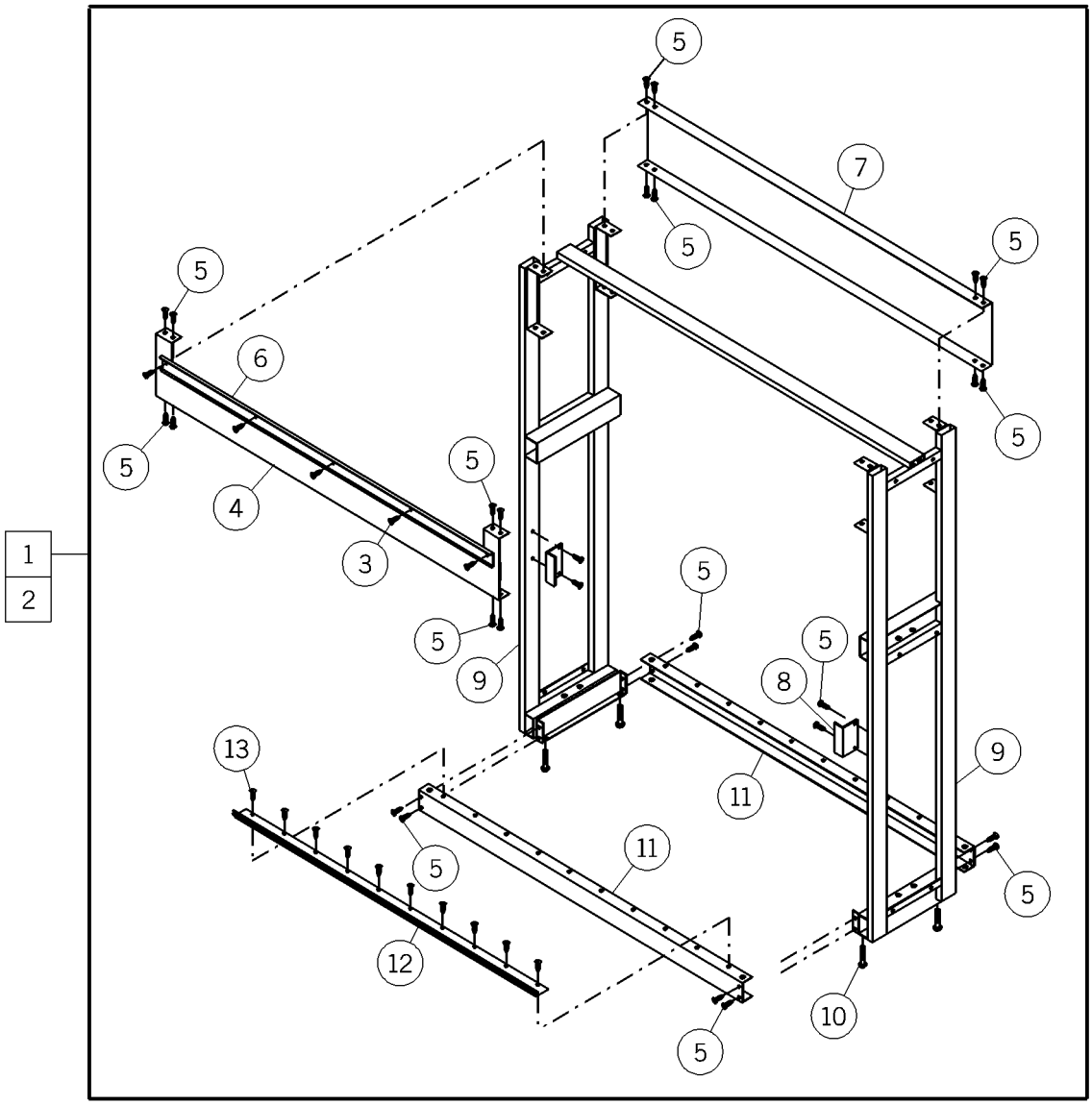

m238_015

Table 5-16. Four Foot Plain Frame Assembly, Level II Single and Double Sided

Item Number	Part Number	Quantity	Description
1	10015121 (1001)	1	Outrigger frame assembly, level II double sided
2	10015124 (1001)	1	Outrigger frame assembly, level II single sided
3	54095 (1001)	5 or 10	Screw (used on 10015124) Screw (used on 10015121)
4	53567-02 (1001)	1 or 2	Brace assembly 4’ (used on 10015124) Brace assembly 4’ (used on 10015121)
5	53244-04 (1001)	32 or 36	Screw (used on 10015124) Screw (used on 10015121)
6	54954 (1001)	1 or 2	Hanger, without chase 4’ (used on 10015124) Hanger, without chase 4’ (used on 10015121)
7	54568 (1001)	1	Frame center raceway (used on 10015124)
8	52853 (1001)	2 or 4	Door bracket (used on 10015124) Door bracket (used on 10015121)
9	54585 (1001)	2	End assembly, free standing
10	52872 (1001)	4	Leveling screw
11	52734 (1001)	2	Frame kickboard
12	52903 (1001)	1 or 2	Bracket - hose panel (used on 10015124) Bracket - hose panel (used on 10015121)
13	393 (1001)	10 or 20	Screw (used on 10015124) Screw (used on 10015121)

Four Foot Plain Frame Assembly, Level III Single and Double Sided

Figure 5-18. Four Foot Plain Frame Assembly, Level III Single and Double Sided

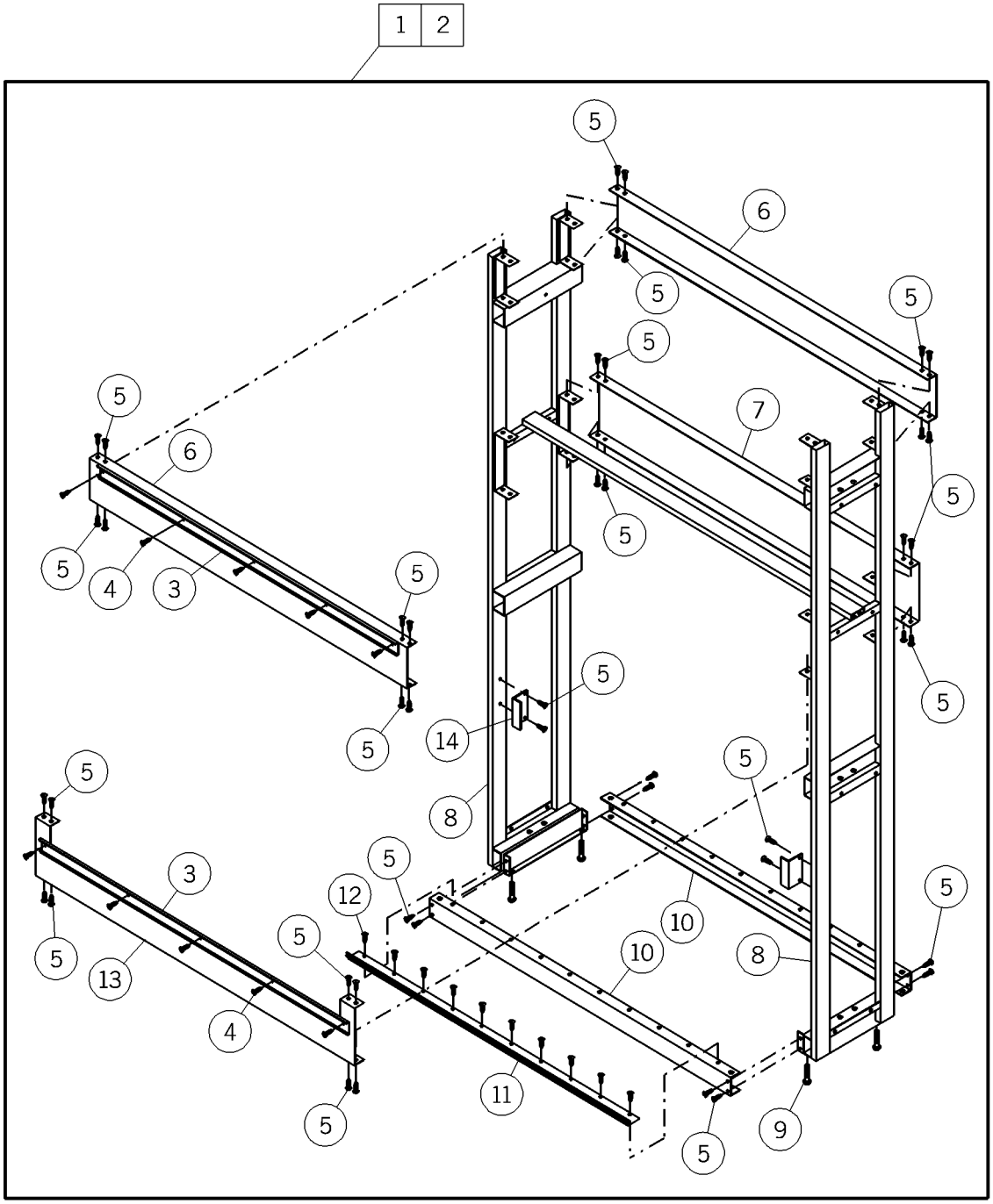

m238_013

Table 5-17. Four Foot Plain Frame Assembly, Level III Single and Double Sided

Item Number	Part Number	Quantity	Description
1	10015131 (1001)	1	Outrigger frame assembly, level III double sided
2	10015134 (1001)	1	Outrigger frame assembly, level III single sided
3	54954 (1001)	2 or 4	Hanger, without chase 4’ (used on 10015134) Hanger, without chase 4’ (used on 10015131)
4	54095 (1001)	10 or 20	Screw (used on 10015134) Screw (used on 10015131)
5	53244-04 (1001)	48 or 52	Screw (used on 10015134) Screw (used on 10015131)
6	52735 (1001)	2	Frame-top raceway
7	54568 (1001)	1	Frame center raceway (used on 10015134)
8	5277304 (1001)	2	End assembly, free standing
9	52872 (1001)	4	Leveling screw
10	52734 (1001)	2	Frame kickboard
11	52903 (1001)	1 or 2	Bracket - hose panel (used on 10015134) Bracket - hose panel (used on 10015131)
12	393 (1001)	10 or 20	Screw (used on 10015134) Screw (used on 10015131)
13	53567-02 (1001)	1 or 2	Brace assembly 4’ (used on 10015134) Brace assembly 4’ (used on 10015131)
14	52853 (1001)	2 or 4	Door bracket (used on 10015134) Door bracket (used on 10015131)

Three Foot Countertop Frame Assembly

Figure 5-19. Three Foot Countertop Frame Assembly

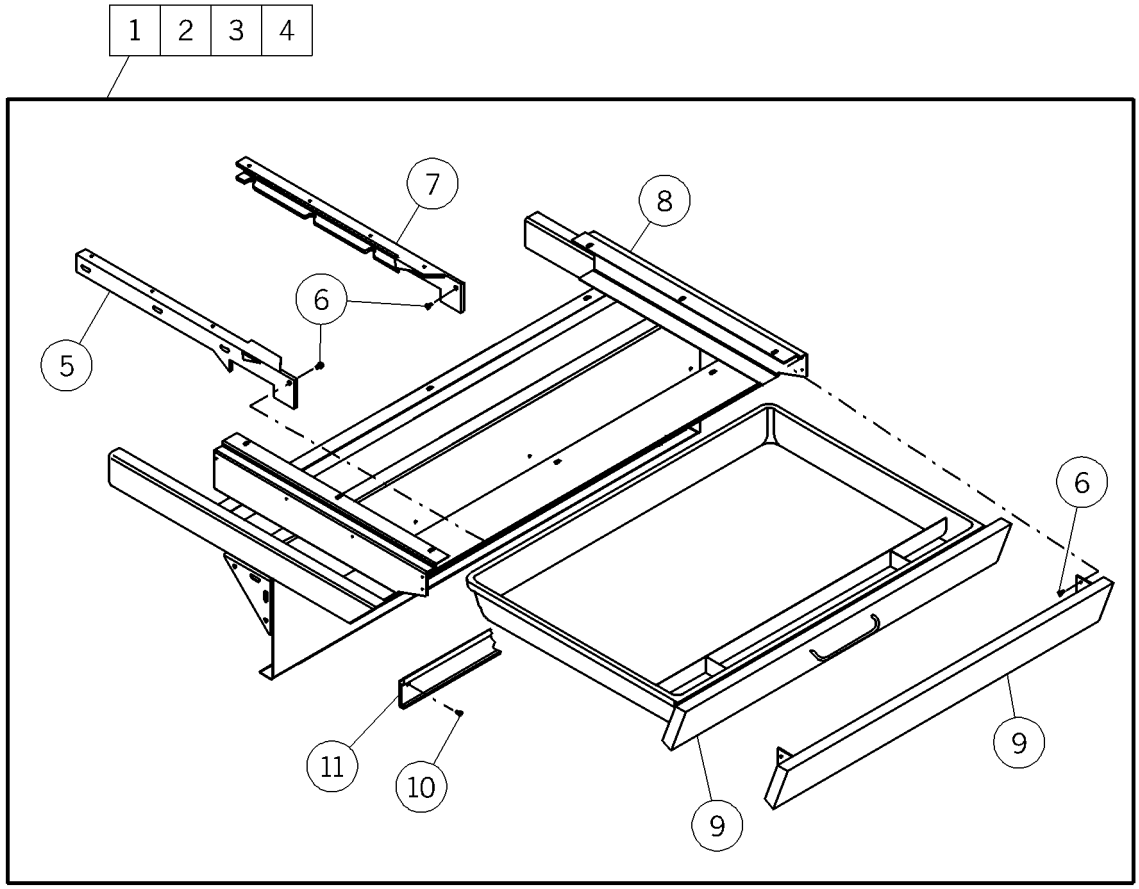

m238_054

Table 5-18. Three Foot Countertop Frame Assembly

Item Number	Part Number	Quantity	Description
1	10015235 (1001)*	1	Countertop frame assembly 3', 18" with drawer
2	10015236 (1001)*	1	Countertop frame assembly 3', 24" with drawer
3	10015237 (1001)*	1	Countertop frame assembly 3', 18" with drawer
4	10015238 (1001)*	1	Countertop frame assembly 3', 24" with drawer
5	54647-02 (1001)	1	Drawer runner, lh (used on 10015203-37 and 38)
6	52945-02 (1001)	4 or 8	Screw (used on 10015203-37 and 38) Screw (used on 10015203-35 and 36)
7	5464701 (1001)	1	Draw runner, rh (used on 10015203-35 and 36)
8	54947 (1001) or 54946 (1001)	1 1	18" deep countertop frame assembly (used on 10015203-35 and 37) 24" deep countertop frame assembly (used on 10015203-36 and 38)
9	54953 (1001)* or 54952 (1001)*	1 1	Drawer assembly, 36" wide (used on 10015203-35 and 36) Fascia, 36" wide (used on 10015203-37 and 38)
10	54095 (1001)	4	Screw
11	54955 (1001)	1	Hanger, without chase 3'

* Specify high pressure laminate color.

Four Foot Countertop Frame Assembly With Chase Extension

Figure 5-20. Four Foot Countertop Frame Assembly With Chase Extension

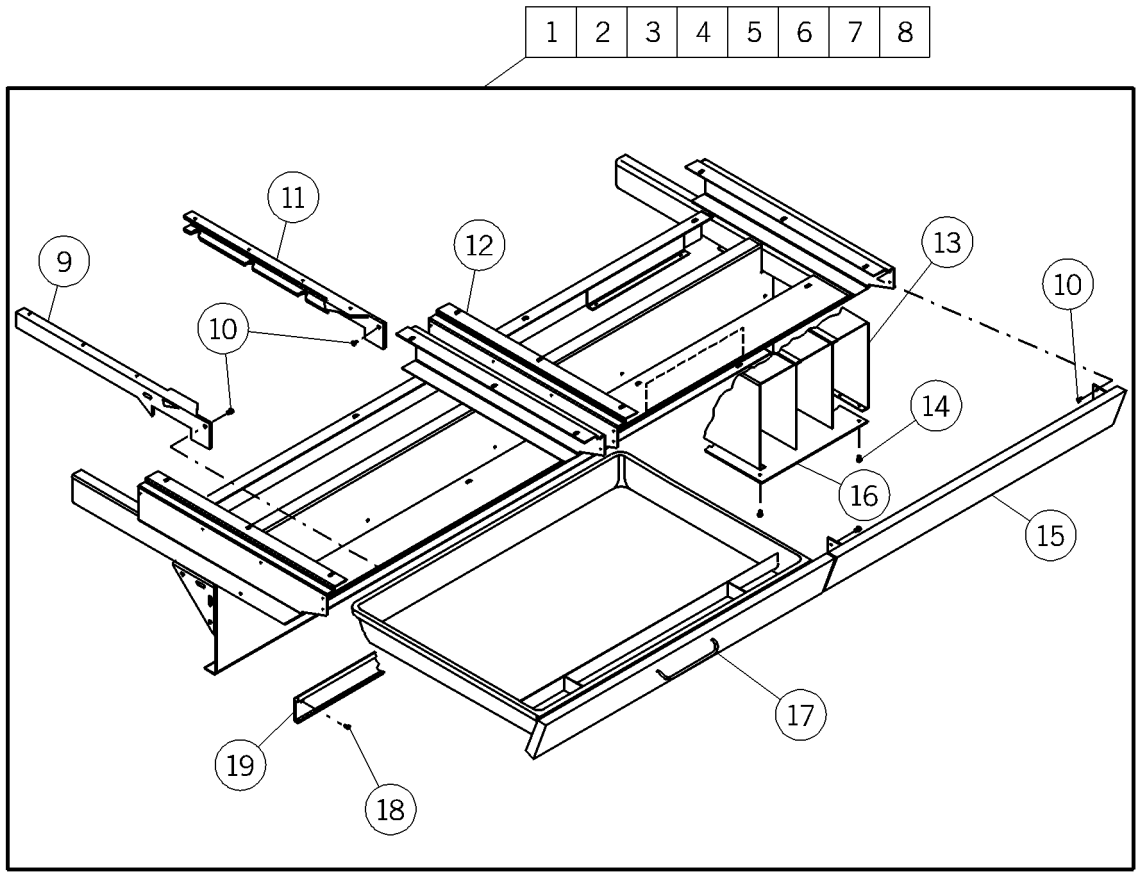

m238_047

Table 5-19. Four Foot Countertop Frame Assembly With Chase Extension

Item Number	Part Number	Quantity	Description
1	10015221 (1001)*	1	18" countertop frame assembly, single drawer with rh chase extension
2	10015222 (1001)*	1	24" countertop frame assembly, single drawer with rh chase extension
3	10015223 (1001)*	1	18" countertop frame assembly, double drawer with rh chase extension
4	10015224 (1001)*	1	24" countertop frame assembly, double drawer with rh chase extension
5	10015225 (1001)*	1	18" countertop frame assembly, single drawer with lh chase extension
6	10015226 (1001)*	1	24" countertop frame assembly, single drawer with lh chase extension
7	10015227 (1001)*	1	18" countertop frame assembly, double drawer with lh chase extension
8	10015228 (1001)*	1	24" countertop frame assembly, double drawer with lh chase extension
9	54647-02 (1001)	1 or 2	Drawer runner lh (used on 10015201-21, 22, 25 and 26) Drawer runner lh (used on 10015201-23, 24, 27 and 28)
10	52945-02 (1001)	12 or 16	Screw (used on 10015201-21, 22, 25 and 26) Screw (used on 10015201-23, 24, 27 and 28)
11	5464701 (1001)	1 or 2	Drawer runner rh (used on 10015201-21, 22, 25 and 26) Drawer runner rh (used on 10015201-23, 24, 27 and 28)

* Specify high pressure laminate color.

Item Number	Part Number	Quantity	Description
12	54648 (1001) or 54860 (1001) or 54818 (1001) or 54859 (1001)	1 1 1 1	18" deep countertop frame assembly, rh chase extension (used on 10015201-21 and 23) 18" deep countertop frame assembly, lh chase extension (used on 10015201-25 and 27) 24" deep countertop frame assembly, rh chase extension (used on 10015201-22 and 24) 24" deep countertop frame assembly, lh chase extension (used on 10015201-26 and 28)
13	54638 (1001) or 54840 (1001)	1 1	Chase extension assembly (used on 10015201-21, 23, 25 and 27) Chase extension assembly (used on 10015201-22, 24, 26 and 28)
14	393 (1001)	8	Screw
15	54658 (1001)*	1	Fascia assembly, 24" wide (used on 10015201-21, 22, 25 and 26)
16	54637 (1001) or 54842 (1001)	1 1	Cover plate, chase extension (used on 10015201-21, 23, 25 and 27) Cover plate, chase extension (used on 10015201-22, 24, 26 and 28)
17	54659 (1001)*	1 or 2	Drawer assembly, 24" wide (used on 10015201-21, 22, 25 and 26) Drawer assembly, 24" wide (used on 10015201-23, 24, 27 and 28)
18	54095 (1001)	4	Screw
19	54660 (1001)	1	Hanger, without chase

* Specify high pressure laminate color.

NOTES:

Four Foot Countertop Frame Assembly

Figure 5-21. Four Foot Countertop Frame Assembly

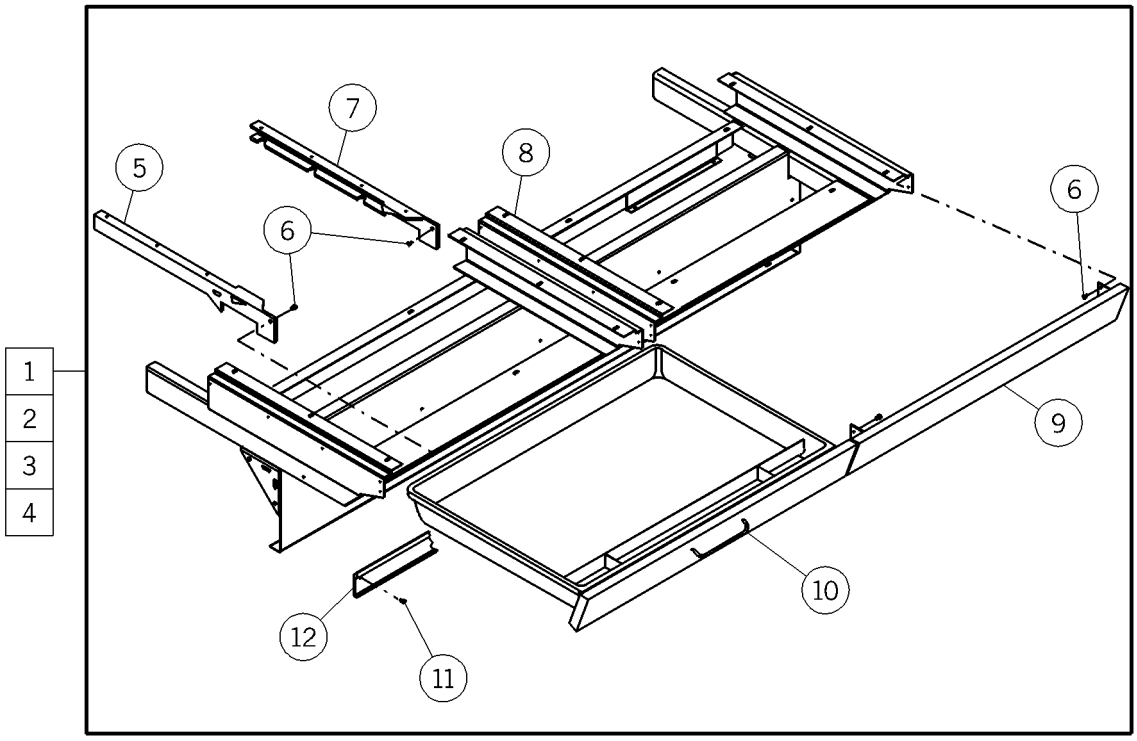

m238_048

Table 5-20. Four Foot Countertop Frame Assembly

Item Number	Part Number	Quantity	Description
1	10015231 (1001)	1	Countertop frame assembly, single drawer, 18"
2	10015232 (1001)	1	Countertop frame assembly, single drawer, 24"
3	10015233 (1001)	1	Countertop frame assembly, double drawer, 18"
4	10015234 (1001)	1	Countertop frame assembly, double drawer, 24"
5	54647-02 (1001)	1 or 2	Drawer runner lh (used on 10015201-31 and 32) Drawer runner lh (used on 10015201-33 and 34)
6	52945-02 (1001)	12 or 16	Screw (used on 10015202-31 and 32) Screw (used on 10015202-33 and 34)
7	5464701 (1001)	1 or 2	Drawer runner rh (used on 10015201-31 and 32) Drawer runner rh (used on 10015201-33 and 34)
8	54861 (1001) or 54940 (1001)	1 1	18" deep countertop frame assembly (used on 10015202-31 and 32) 24" deep countertop frame assembly, (used on 10015201-33 and 34)
9	54658 (1001)*	1	Fascia assembly, 24" wide (used on 10015202-31 and 32)
10	54659 (1001)	1 or 2	Drawer assembly, 24" wide (used on 10015202-31 and 32) Drawer assembly, 24" wide (used on 10015202-33 and 34)
11	54095 (1001)	4	Screw
12	54954 (1001)	1	Hanger, without chase

* Specify high pressure laminate color.

Countertops

Figure 5-22. Countertops

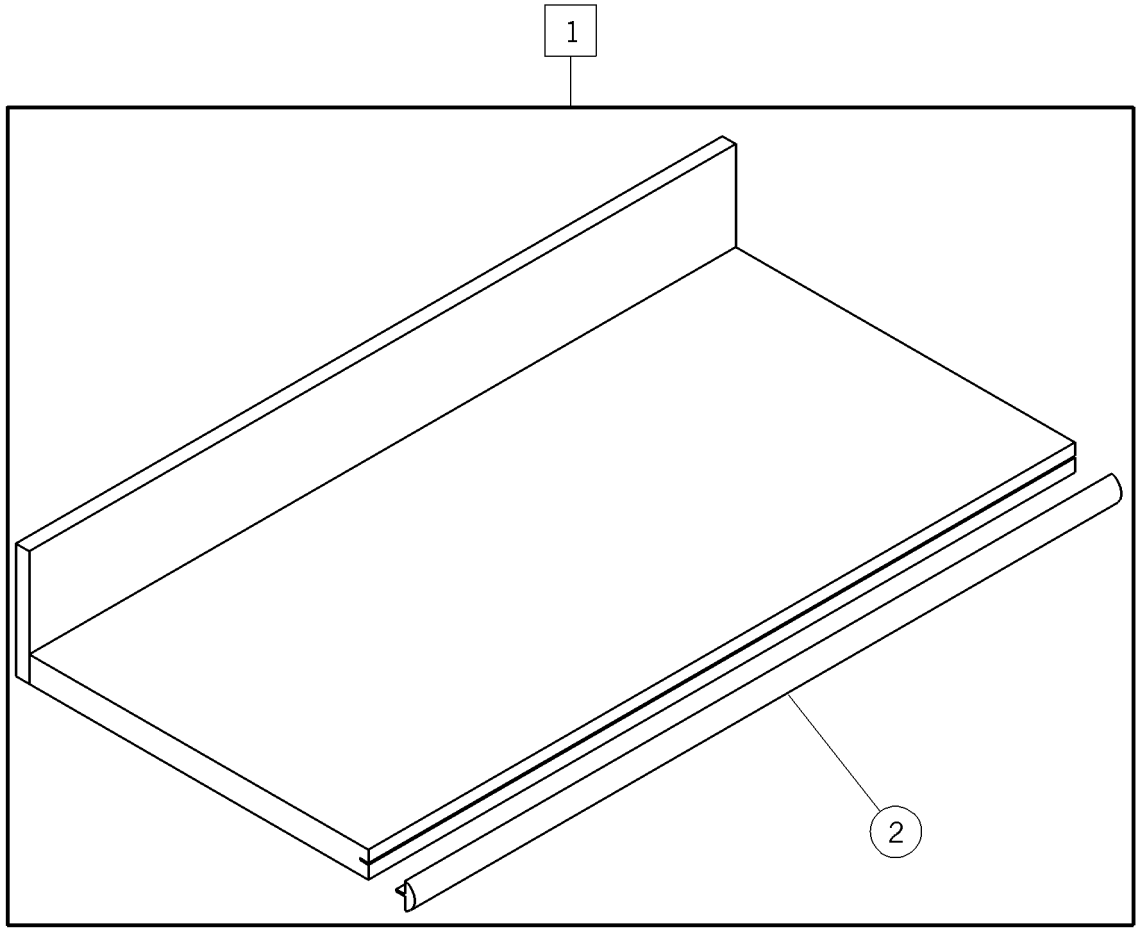

m238_096

Table 5-21. Countertops

Item Number	Part Number	Quantity	Description
1	10015210 (1001)* or 10015211 (1001)* or 10015212 (1001)* or 10015213 (1001)* or 10015214 (1001)* or 10015215 (1001)* or 10015216 (1001)* or 10015217 (1001)*	1 1 1 1 1 1 1 1	countertop, 18" x 36" (used on single 3' frame assemblies) countertop, 24" x 36" (used on single 3' frame assemblies) countertop, 18" x 48" (used on single 4' frame assemblies) countertop, 24" x 48" (used on single 4' frame assemblies) countertop, 18" x 84" (used on combination of single 3' and 4' frame assemblies) countertop, 24" x 84" (used on combination of single 3' and 4' frame assemblies) countertop, 18" x 96" (used on combination of (2) single 4' frame assemblies) countertop, 24" x 96" (used on combination of (2) single 4' frame assemblies)
2	54680 (1001)	As required	Bumper molding (36" or 48" standard lengths)

* Specify high pressure laminate color.

5

Isolated Power Breaker Panel

Figure 5-23. Isolated Power Breaker Panel

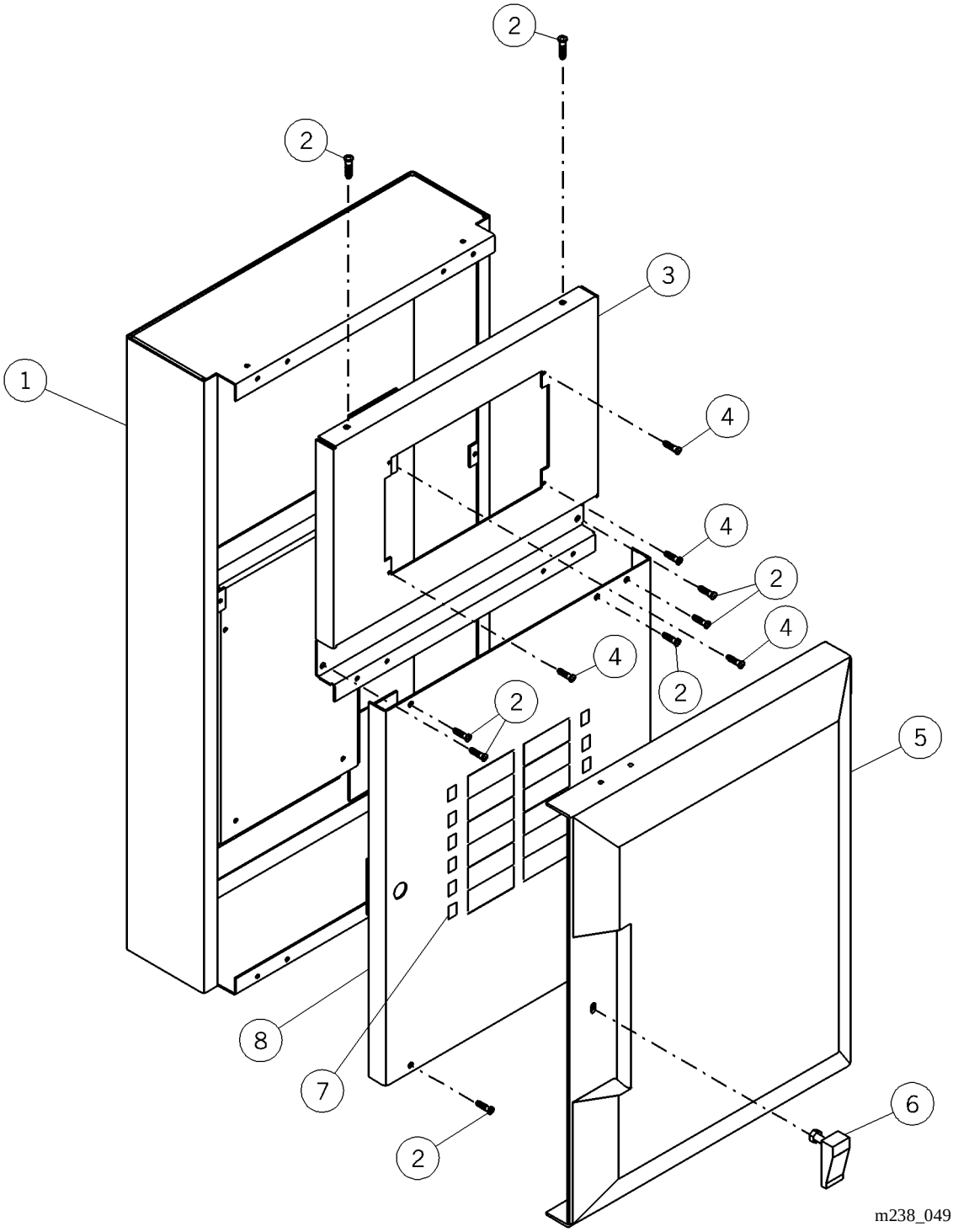

Table 5-22. Isolated Power Breaker Panel

Item Number	Part Number	Quantity	Description
1	57371 (1001)	1	Tube assembly
2	53125-02 (1001)	10	Screw
3	57368 (1001)	1	Line isolation monitor mount
4	50891-04 (1001)	4	Screw
5	54797 (1001)	1	Cover assembly
6	53856-01 (1001)	1	Latch, swell
7	56085 (1001)	As required	Blank label
8	57370 (1001)	1	Deadfront assembly

Gas Manifold Tree

Figure 5-24. Gas Manifold Tree

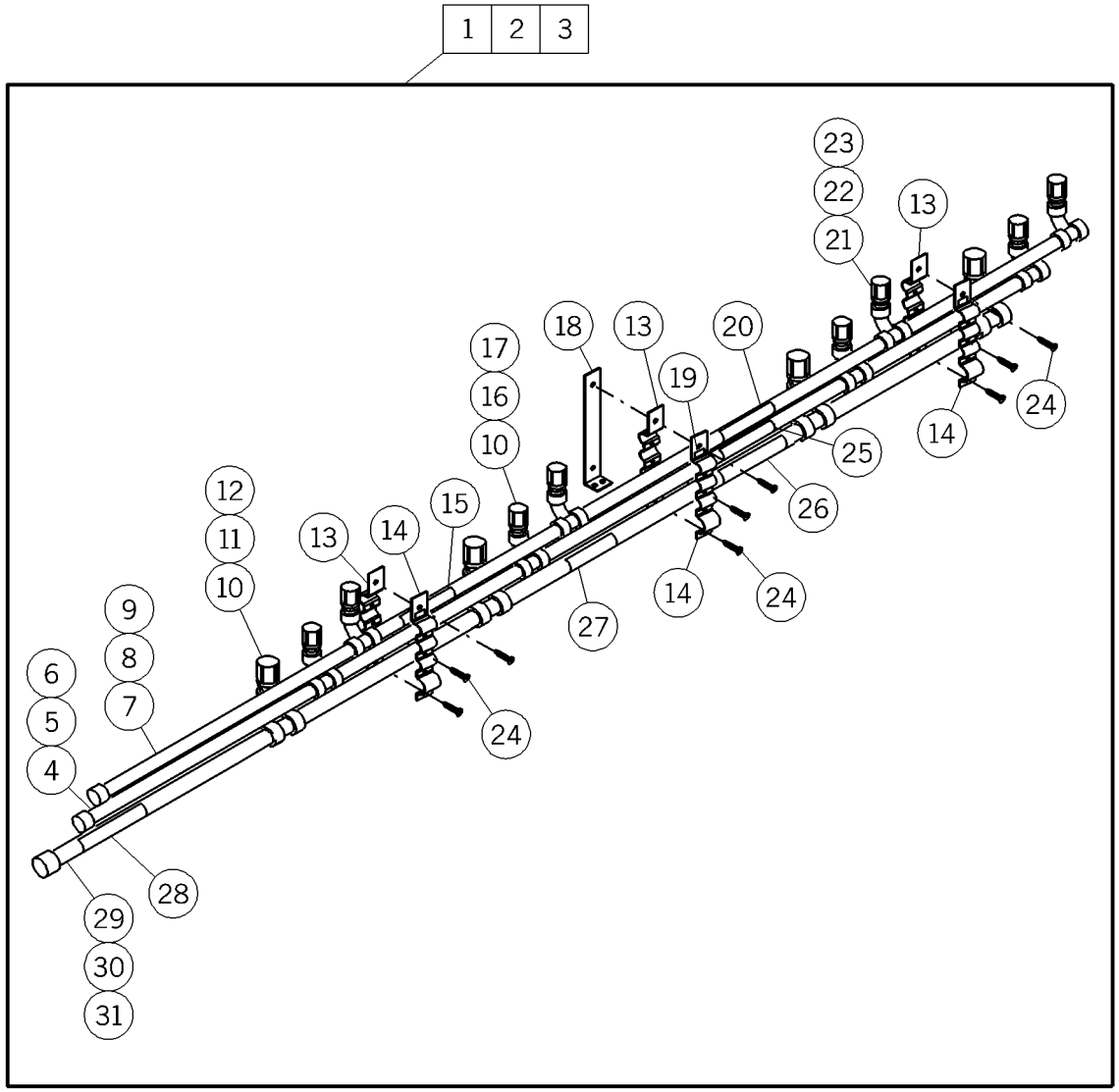

m238_050

Table 5-23. Gas Manifold Tree

Item Number	Part Number	Quantity	Description
1	10013001 (1001)	1	Gas manifold tree, lh (4) port
2	10013002 (1001)	1	Gas manifold tree, rh (4) port
3	10013003 (1001)	1	Gas manifold tree, extension (4) port
4	5308201 (1001)	1	Manifold, rh (4) port, oxygen (used on 100130-02)
5	5308202 (1001)	1	Manifold, rh (4) port, air (used on 100130-02)
6	5308203 (1001)	1	Manifold, rh (4) port, vacuum (used on 100130-02)
7	5308301 (1001)	1	Manifold, lh (4) port, oxygen (used on 100130-01)
8	5308302 (1001)	1	Manifold, lh (4) port, air (used on 100130-01)
9	5308303 (1001)	1	Manifold, lh (4) port, vacuum (used on 100130-01)
10	51435 (1001)	8	Cap, air/vacuum
11	56976 (1001)	4	Fitting demand valve vacuum
12	51411 (1001)	4	Shrink tube, vacuum
13	52171 (1001)	3	Clamp
14	52172 (1001)	3	Bracket
15	57427 (1001)	1	Label, attention
16	56974 (1001)	4	Check valve fitting, air
17	51409 (1001)	4	Shrink tube, air
18	52943 (1001)	1	Support manifold tree
19	53355 (1001)	1	Label, UL gas distribution
20	22453 (1001)	1	Label, oxygen
21	51438 (1001)	4	Protective cap, oxygen
22	56975 (1001)	4	Fitting demand valve oxygen
23	51410 (1001)	4	Shrink tube, oxygen
24	52555-04 (1001)	9	Screw
25	22454 (1001)	1	Label, air
26	22455 (1001)	1	Label, vacuum

Item Number	Part Number	Quantity	Description
27	59019 (1001)	1	Label, brazing
28	52456 (1001)	1	Label, warning
29	5308401 (1001)	1	Manifold, extension (4) port, oxygen (used on 100130-03)
30	5308402 (1001)	1	Manifold, extension (4) port, air (used on 100130-03)
31	5308403 (1001)	1	Manifold, extension (4) port, vacuum (used on 100130-03)

NOTES:

Gas Riser Tree

Figure 5-25. Gas Riser Tree

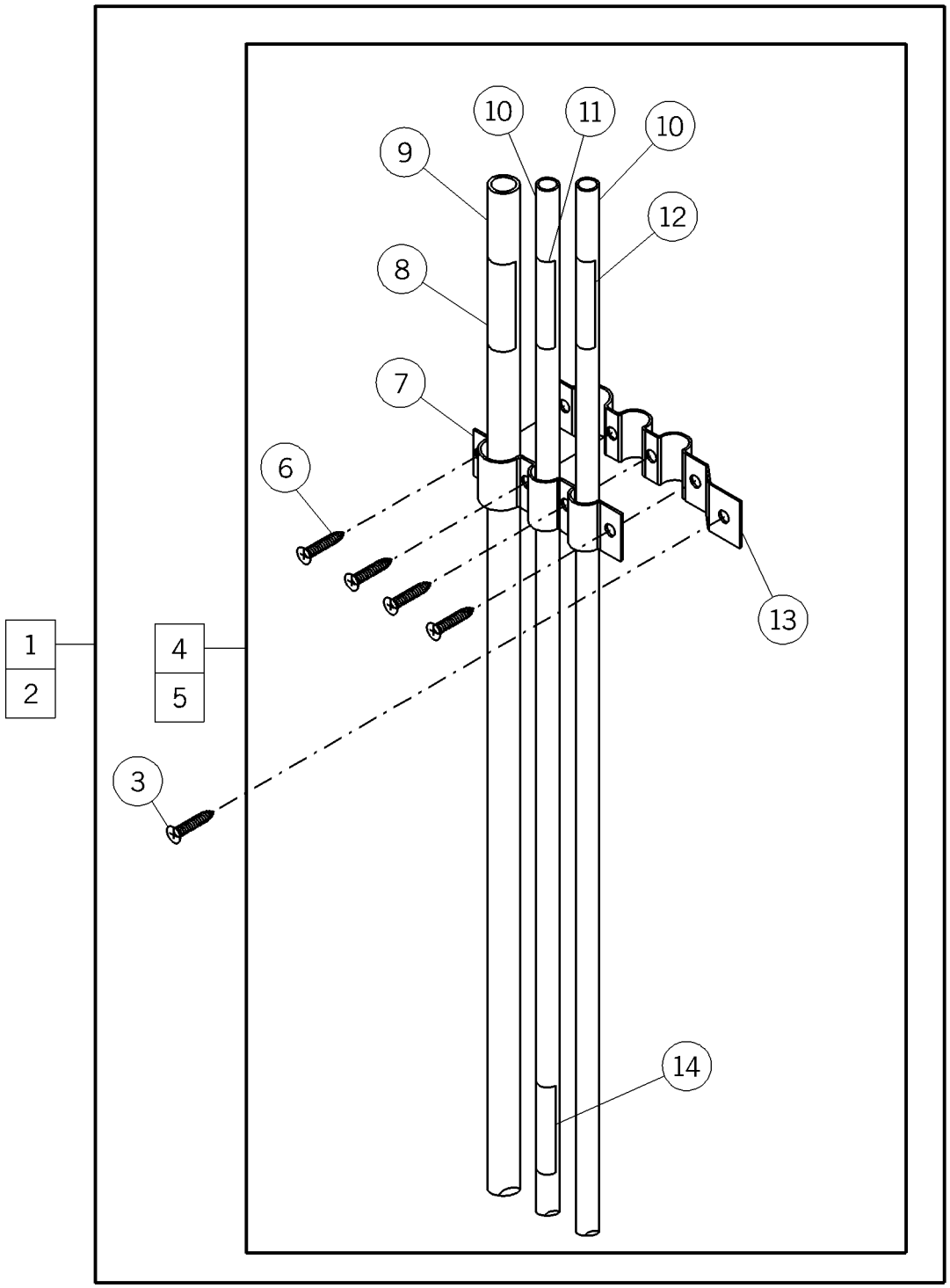

m238_055

Table 5-24. Gas Riser Tree

Item Number	Part Number	Quantity	Description
1	10016201 (1001)	1	Gas riser tree assembly, rh
2	10016202 (1001)	1	Gas riser tree assembly, lh
3	393 (1001)	2	Screw
4	5320601 (1001)	1	Riser tree, rh
5	5320602 (1001)	1	Riser tree, lh
6	5255503 (1001)	8	Screw
7	53207 (1001)	2	Clamp
8	22455 (1001)	2	Label, vacuum
9	5211886 (1001)	1	Copper tubing
10	5133486 (1001)	2	Copper tubing
11	22453 (1001)	2	Label, oxygen
12	22454 (1001)	2	Label, air
13	53352 (1001)	2	Bracket - riser tree
14	52456 (1001)	1	Label, warning

Light Raceway Assembly

Figure 5-26. Light Raceway Assembly

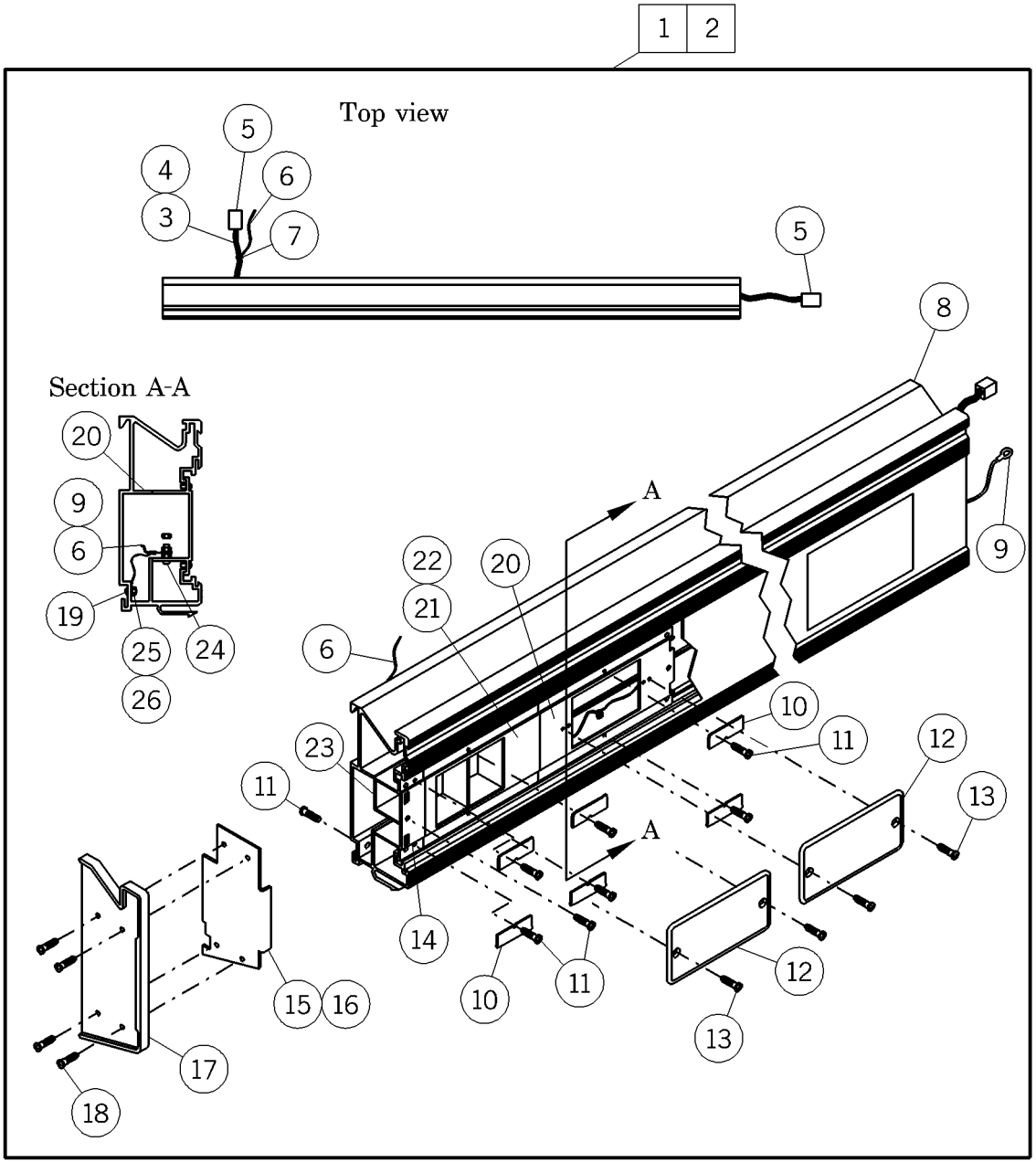

m238_051

Table 5-25. Light Raceway Assembly

Item Number	Part Number	Quantity	Description
1	10013411 (1001)	1	Light raceway assembly, rh
2	10013412 (1001)	1	Light raceway assembly, lh
3	5254405 (1001)	5	Wire lead, black
4	5254406 (1001)	5	Wire lead, white
5	51517-01 (1001)	20	Housing contact
6	5125960 (1001)	1	Wire lead, green
7	52553 (1001)	1	Wire tie
8	21352 (1001)	3	Snap bushing
9	52074-03 (1001)	1	Wire lead, green
10	52122 (1001)	8	Lock-device plate
11	50891-02 (1001)	10	Screw
12	52226 (1001)	2	Blank faceplate
13	50590 (1001)	4	Screw
14	5210708 (1001)	1	Raceway cover
15	52061 (1001)	1	End plate, lh (used on 100134-12)
16	52062 (1001)	1	End plate, rh (used on 100134-11)
17	54521 (1001)	2	End cap - raceway
18	53125-02 (1001)	4	Screw
19	52243-03 (1001)	1	Screw
20	52105 (1001)	1	Device plate
21	53105 (1001)	1	Access plate, rh (used on 100134-11)
22	52666 (1001)	1	Access plate, lh (used on 100134-12)
23	53023-01 (1001)	1	Barrier assembly
24	52243-07 (1001)	1	Screw
25	15250 (1001)	4	Locknut washer base
26	5207407 (1001)	1	Wire lead, green 9"

Gas Raceway Assembly

Figure 5-27. Gas Raceway Assembly

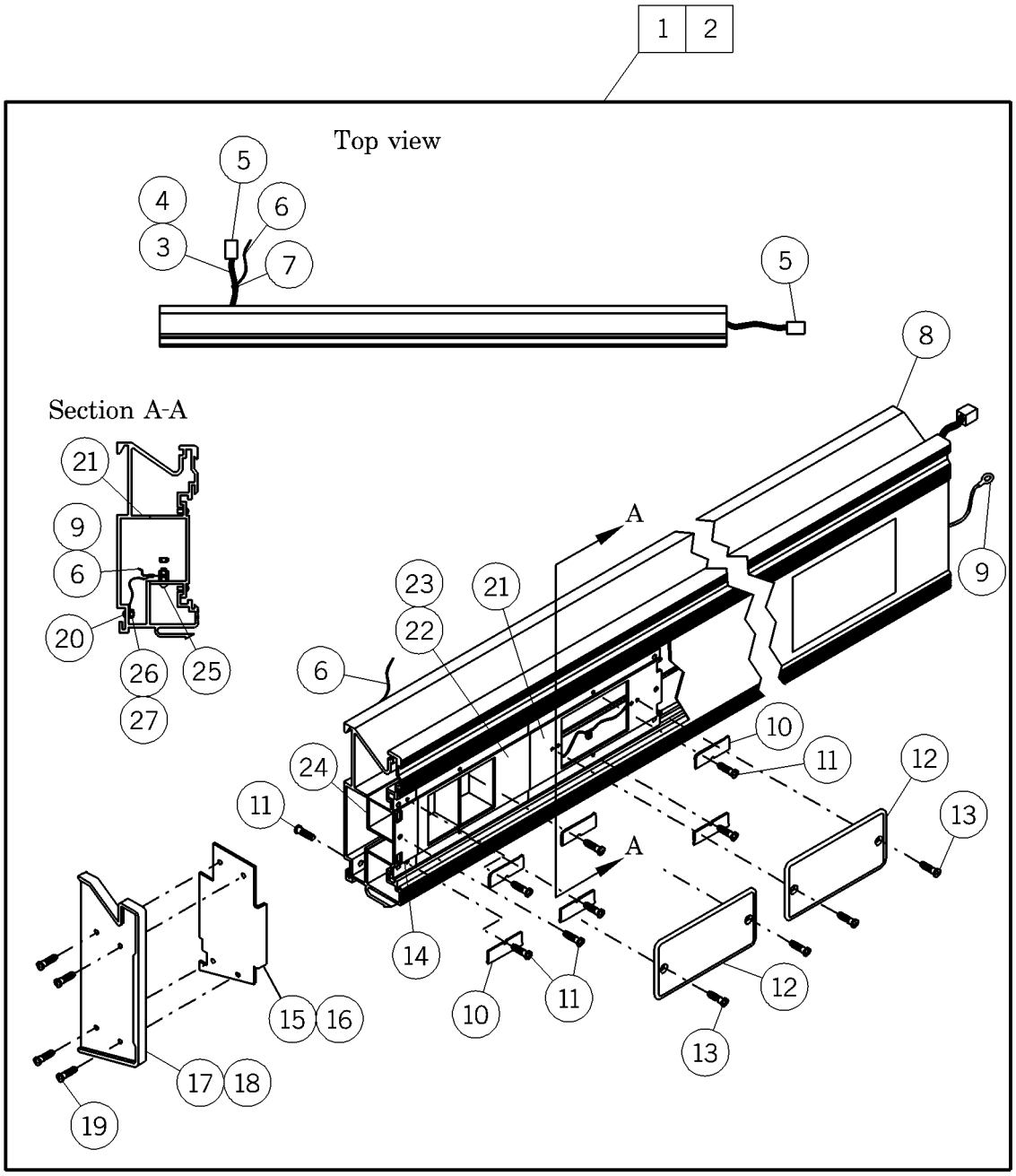

m238_052

Table 5-26. Gas Raceway Assembly

Item Number	Part Number	Quantity	Description
1	10013511 (1001)	1	Gas raceway assembly, rh
2	10013512 (1001)	1	Gas raceway assembly, lh
3	5254405 (1001)	5	Wire lead, black
4	5254406 (1001)	5	Wire lead, white
5	51517-01 (1001)	12	Housing contact
6	5125960 (1001)	1	Wire lead, green
7	52553 (1001)	2	Wire tie
8	21352 (1001)	3	Snap bushing
9	5207403 (1001)	1	Wire lead, green
10	52122 (1001)	8	Lock device plate
11	50891-02 (1001)	10	Screw
12	52226 (1001)	2	Blank faceplate
13	50590 (1001)	4	Screw
14	5210708 (1001)	2	Raceway cover
15	52061 (1001)	1	End plate, lh (used on 100135-12)
16	52062 (1001)	1	End plate, rh (used on 100135-11)
17	54754-02 (1001)	1	End cap - gas raceway (used on 100135-11)
18	54754-01 (1001)	1	End cap - gas raceway (used on 100135-12)
19	53125-02 (1001)	4	Screw
20	52243-03 (1001)	1	Screw
21	52105 (1001)	1	Device plate
22	53105 (1001)	1	Access plate, rh (used on 100135-11)
23	52666 (1001)	1	Access plate, lh (used on 100134-12)
24	53023-01 (1001)	1	Barrier assembly
25	52243-07 (1001)	1	Screw
26	15250 (1001)	4	Locknut washer base

Item Number	Part Number	Quantity	Description
27	5207407 (1001)	1	Wire lead, green 9"

NOTES:

Hose Panel Assembly

Figure 5-28. Hose Panel Assembly

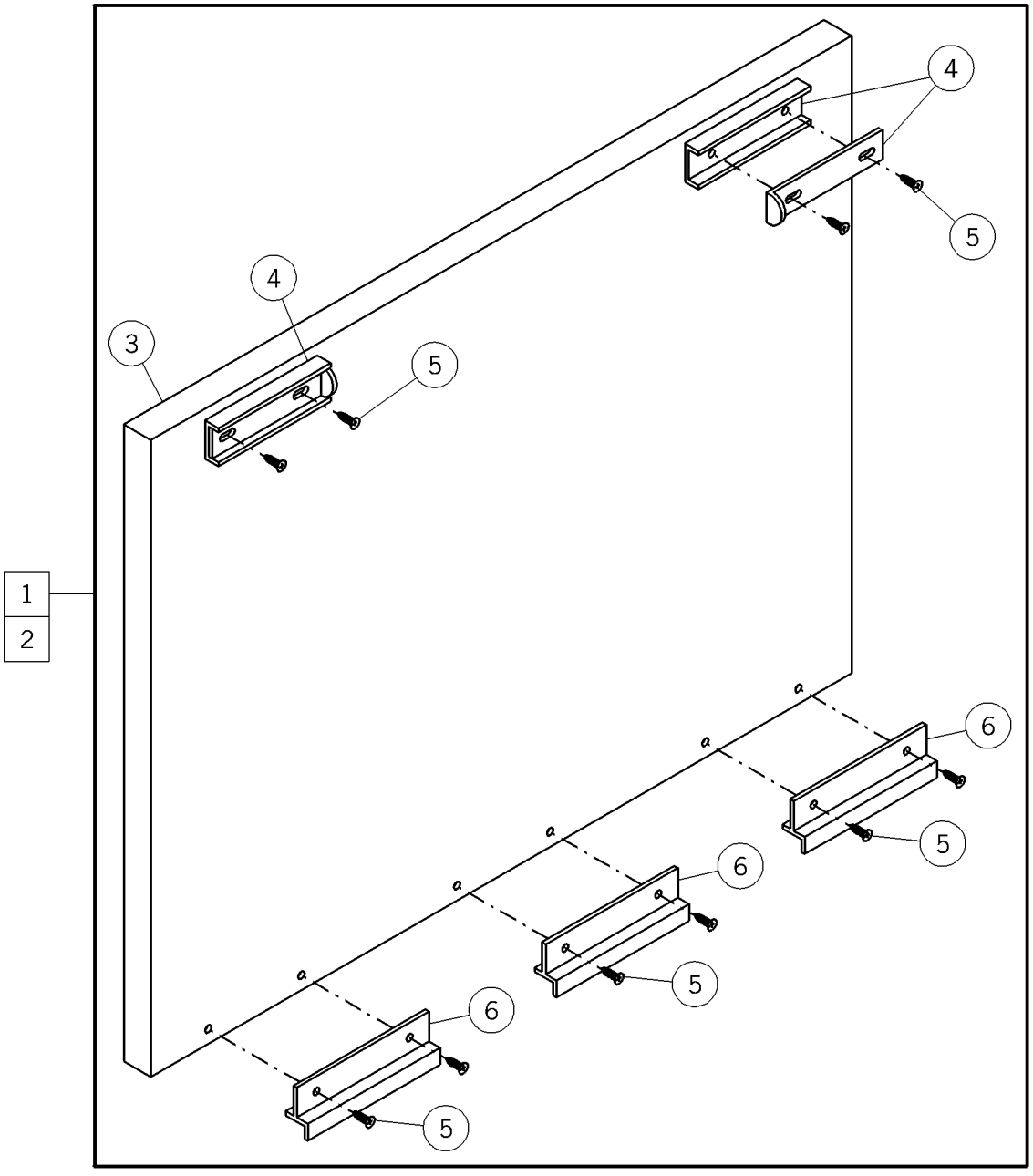

Table 5-27. Hose Panel Assembly

Item Number	Part Number	Quantity	Description
1	10010401 (1001)*	1	4’ hose panel assembly
2	10010402 (1001)*	1	3’ hose panel assembly
3	5291101 (1001)* or 5291102 (1001)*	1 1	4’ hose panel (used on 100104-01) 3’ hose panel (used on 100104-02)
4	53353 (1001)	2	Latch
5	510595 (1001)	10	Screw
6	52584-07 (1001)	3	Bracket - hose panel

* Specify high pressure laminate color.

Ceiling Shroud Assembly, Single and Double Sided

Figure 5-29. Ceiling Shroud Assembly, Single and Double Sided

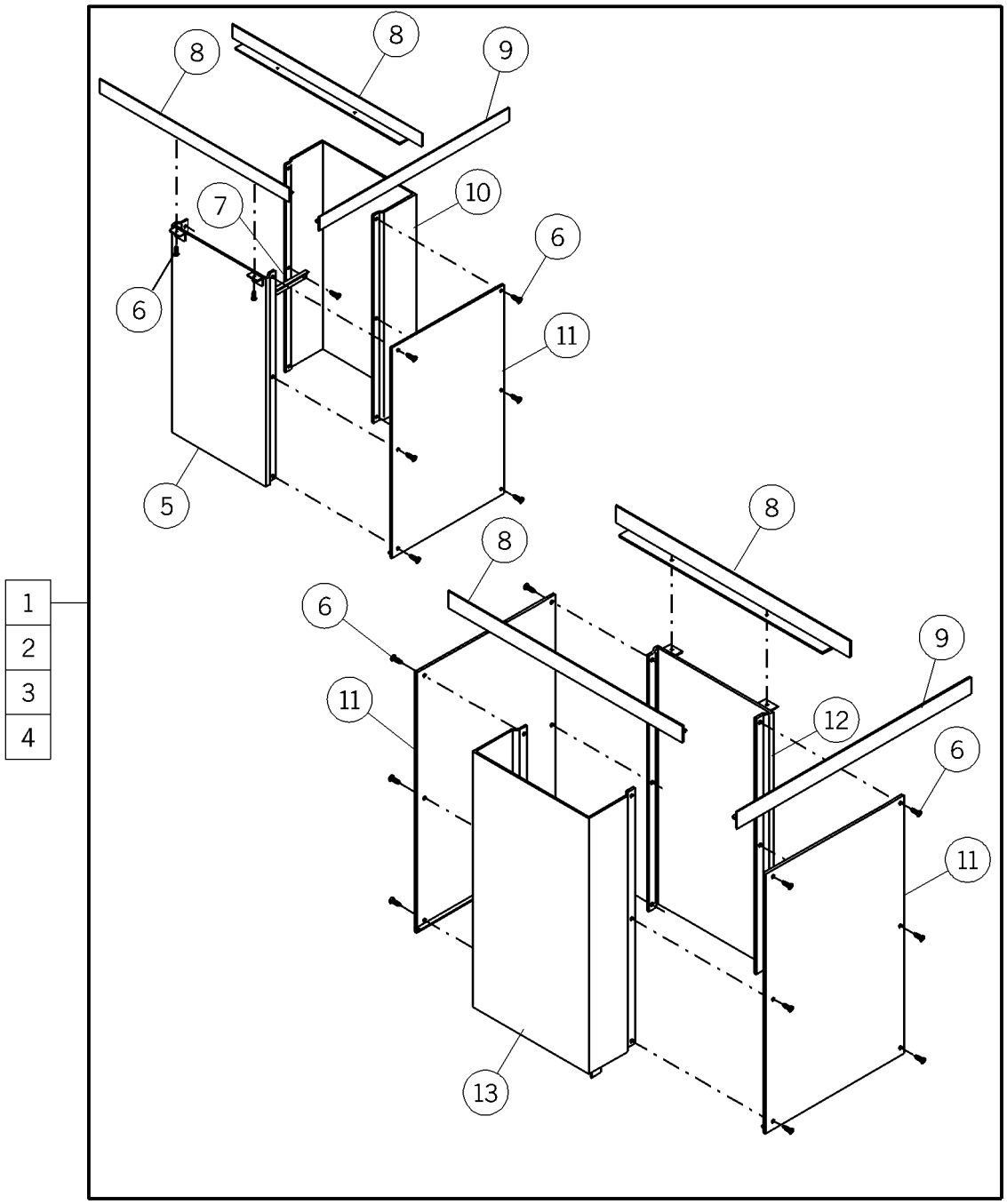

Table 5-28. Ceiling Shroud Assembly, Single and Double Sided

Item Number	Part Number	Quantity	Description
1	10016001 (1001)	1	Shroud, single sided-8'6"
2	10016002 (1001)	1	Shroud, double sided-8'6"
3	10016003 (1001)	1	Shroud, single sided-9'6"
4	100160-04 (1001)	1	Shroud, double sided-9'6"
5	5313501 (1001)	1	End assembly (used on 100160-01 and 02)
6	53125-01 (1001)	20	Screw
7	53142-39 (1001)	2	Rear brace, shroud (used on 100160-01 and 03)
8	5315539 (1001)	2	Ceiling trim, side
9	5315439 (1001)	1 or 2	Ceiling trim, front (used on 100160-01 and 03) Ceiling trim, front (used on 100160-02 and 04)
10	53138-01 (1001)	1	End assembly (used on 100160-01 and 02)
11	53141-01 (1001) or 53141-02-39 (1001)	1 or 2 1 or 2	Upper front (used on 100160-01) Upper front (used on 100160-02) Upper front (used on 100160-03) Upper front (used on 100160-04)
12	53135-02-39 (1001)	1	End assembly, shroud (used on 100160-03 and 04)
13	53138-02-39 (1001)	1	End assembly, shroud (used on 100160-03 and 04)

Monitor Shelf Assembly

Figure 5-30. Monitor Shelf Assembly

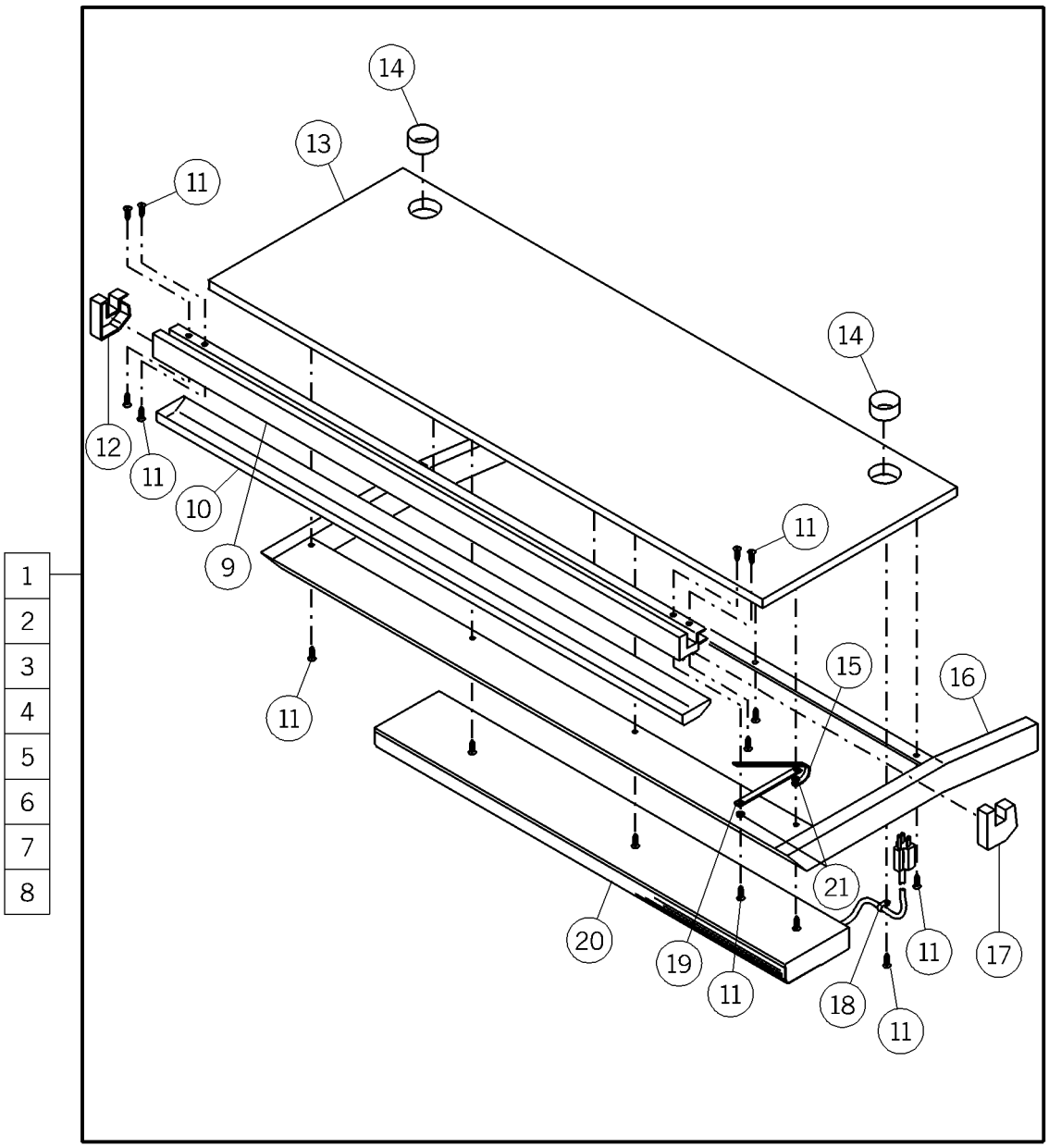

Table 5-29. Monitor Shelf Assembly

Item Number	Part Number	Quantity	Description
1	10015321 (1001)*	1	4' monitor shelf assembly with light
2	10015322 (1001)*	1	3' monitor shelf assembly with light
3	10015323 (1001)*	1	4' monitor shelf assembly
4	10015324 (1001)*	1	3' monitor shelf assembly
5	5326804 (1001)*	1	4' monitor shelf assembly
6	5326803 (1001)*	1	3' monitor shelf assembly
7	5326802 (1001)*	1	4' monitor shelf assembly
8	5326801 (1001)*	1	3' monitor shelf assembly
9	53256 (1001) or 53255 (1001)	1 1	Accessory trough - 3' (used on 5326801 and 03) Accessory trough - 4' (used on 5326802 and 04)
10	5325202 (1001) or 53252-01 (1001)	1 1	Guard (used on 5326801 and 03) Guard - 4' (used on 5326802 and 04)
11	50854-03	16 or 20 or 19 or 23	Screw (used on 5326801) Screw (used on 5326802) Screw (used on 5326803) Screw (used on 5326804)
12	54623-01 (1001)	1	Cap lh monitor shelf extension
13	52805 (1001)* or 52753 (1001)*	1 1	Monitor shelf (used on 5326801 and 03) Monitor shelf (used on 5326802 and 04)
14	16100 (1001)	2	Hose insert flange bushing
15	53247-02 (1001)	1	Ground strap

* Specify high pressure laminate color.

Item Number	Part Number	Quantity	Description
16	5325301-39 (1001) or 5325302-39 (1001)	1 1	Frame assembly (used on 5326801 and 03) Frame assembly (used on 5326802 and 04)
17	54623-02 (1001)	1	Cap rh monitor shelf extension
18	55734 (1001)	1	Cable clamp (used on 5326803 and 04)
19	53321 (1001)	1	Cover ground strap
20	52881 (1001) or 52880 (1001)	1 1	Light fixture task light (used on 5326803) Light fixture task light (used on 5326804)
21	18933 (1001)	2	Washer

NOTES:

Monitor Shelf Without Light

Figure 5-31. Monitor Shelf Without Light

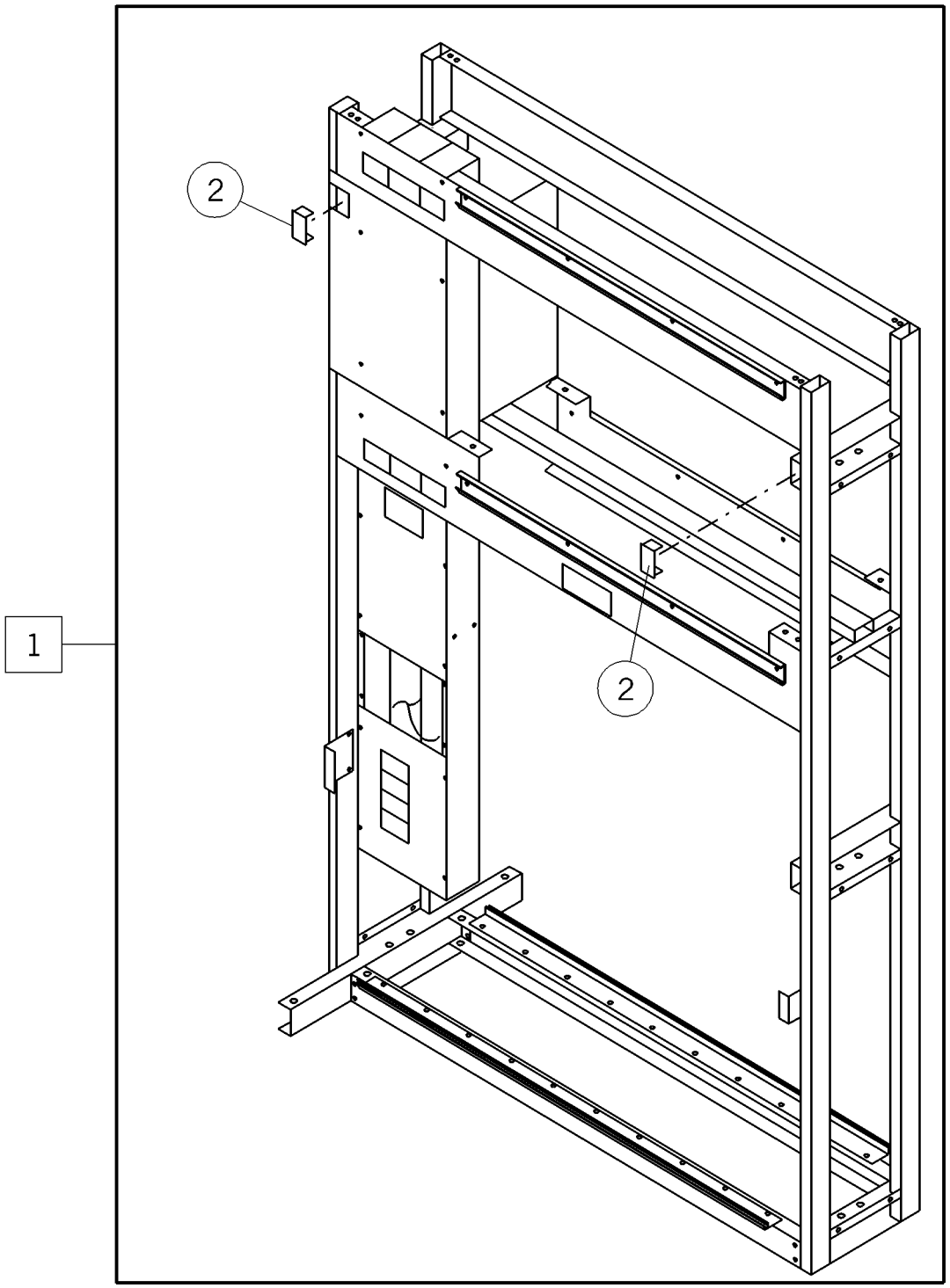

Table 5-30. Monitor Shelf Without Light

Item Number	Part Number	Quantity	Description
1	10015316 (1001)	1	Monitor shelf without light
2	53176 (1001)	2	Plug button assembly

Three Foot Sound Baffle Assembly

Figure 5-32. Three Foot Sound Baffle Assembly

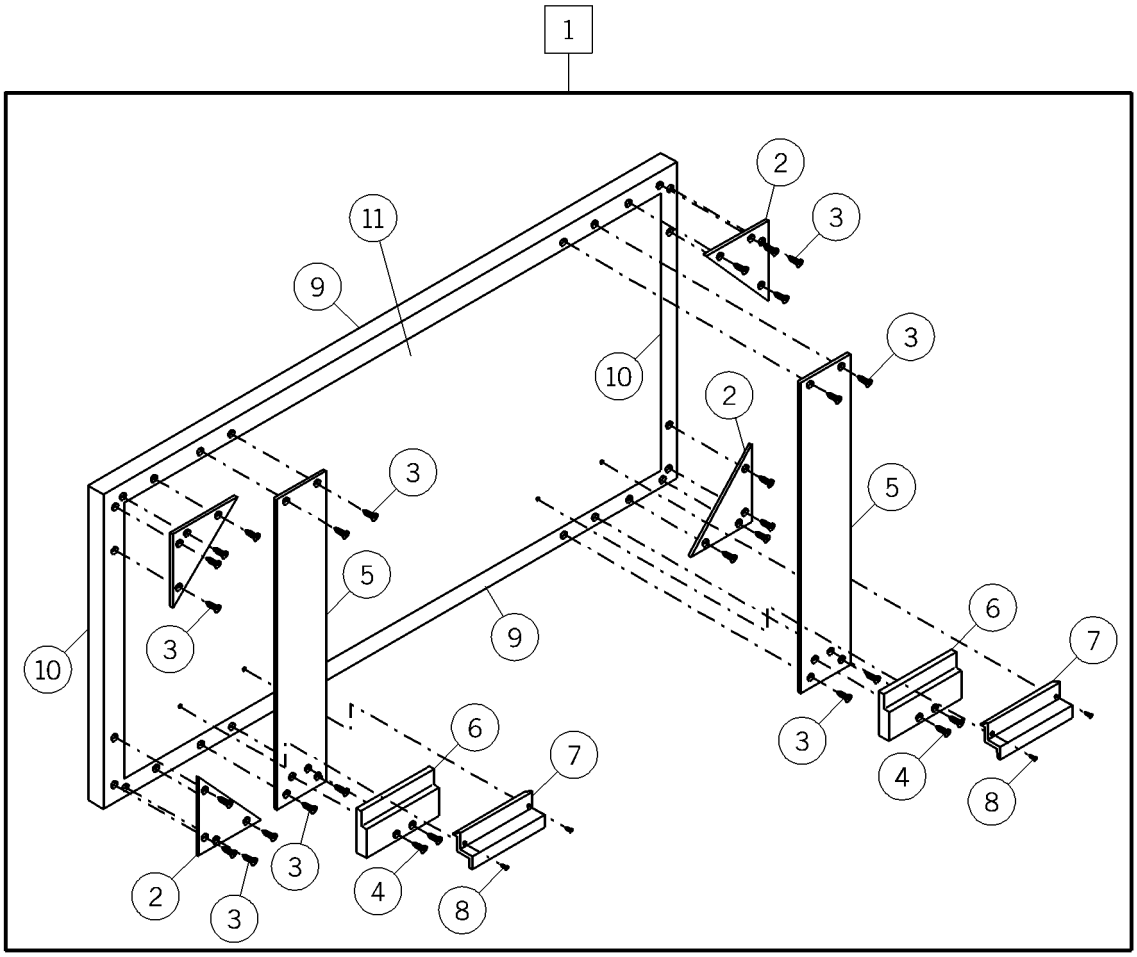

m238_059

Table 5-31. Three Foot Sound Baffle Assembly

Item Number	Part Number	Quantity	Description
1	10016301 (1001)	1	3’ sound baffle assembly (for reference only)
2	56205 (1001)	4	Corner plate (for reference only)
3	54870-03 (1001)	24	Screw
4	52555-03 (1001)	8	Screw
5	56211 (1001)	2	Mounting plate (for reference only)
6	56206 (1001)	2	Face clamp complete (for reference only)
7	56207 (1001)	2	Trough clamp complete (for reference only)
8	15338 (1001)	4	Screw
9	56219 (1001)	2	Top and bottom trim, 3’ (for reference only)
10	56210 (1001)	2	End trim (for reference only)
11	56220 (1001)	1	3’ sound baffle

Four Foot Sound Baffle Assembly

Figure 5-33. Four Foot Sound Baffle Assembly

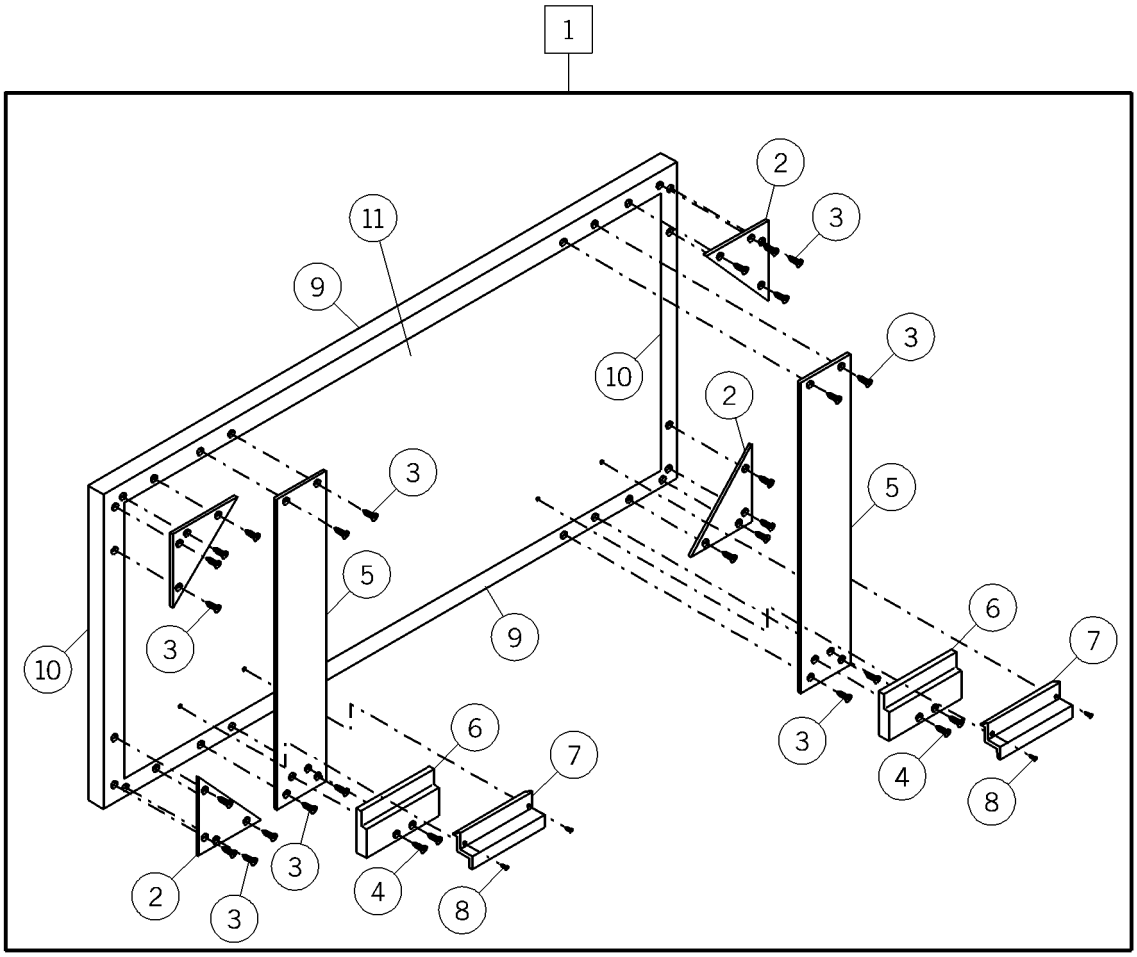

m238_059

Table 5-32. Four Foot Sound Baffle Assembly

Item Number	Part Number	Quantity	Description
1	10016302 (1001)	1	4’ sound baffle assembly (for reference only)
2	56205 (1001)	4	Corner plate (for reference only)
3	54870-03 (1001)	24	Screw
4	52555-03 (1001)	8	Screw
5	56211 (1001)	2	Mounting plate (for reference only)
6	56206 (1001)	2	Face clamp (for reference only)
7	56207 (1001)	2	Trough clamp (for reference only)
8	15338 (1001)	4	Screw
9	56209 (1001)	2	Top and bottom trim, 4’ (for reference only)
10	56210 (1001)	2	End trim (for reference only)
11	56208 (1001)	1	4’ sound baffle (for reference only)

Top Shelf for Level II Frame Assemblies, Single and Double Sided

Figure 5-34. Top Shelf for Level II Frame Assemblies, Single and Double Sided

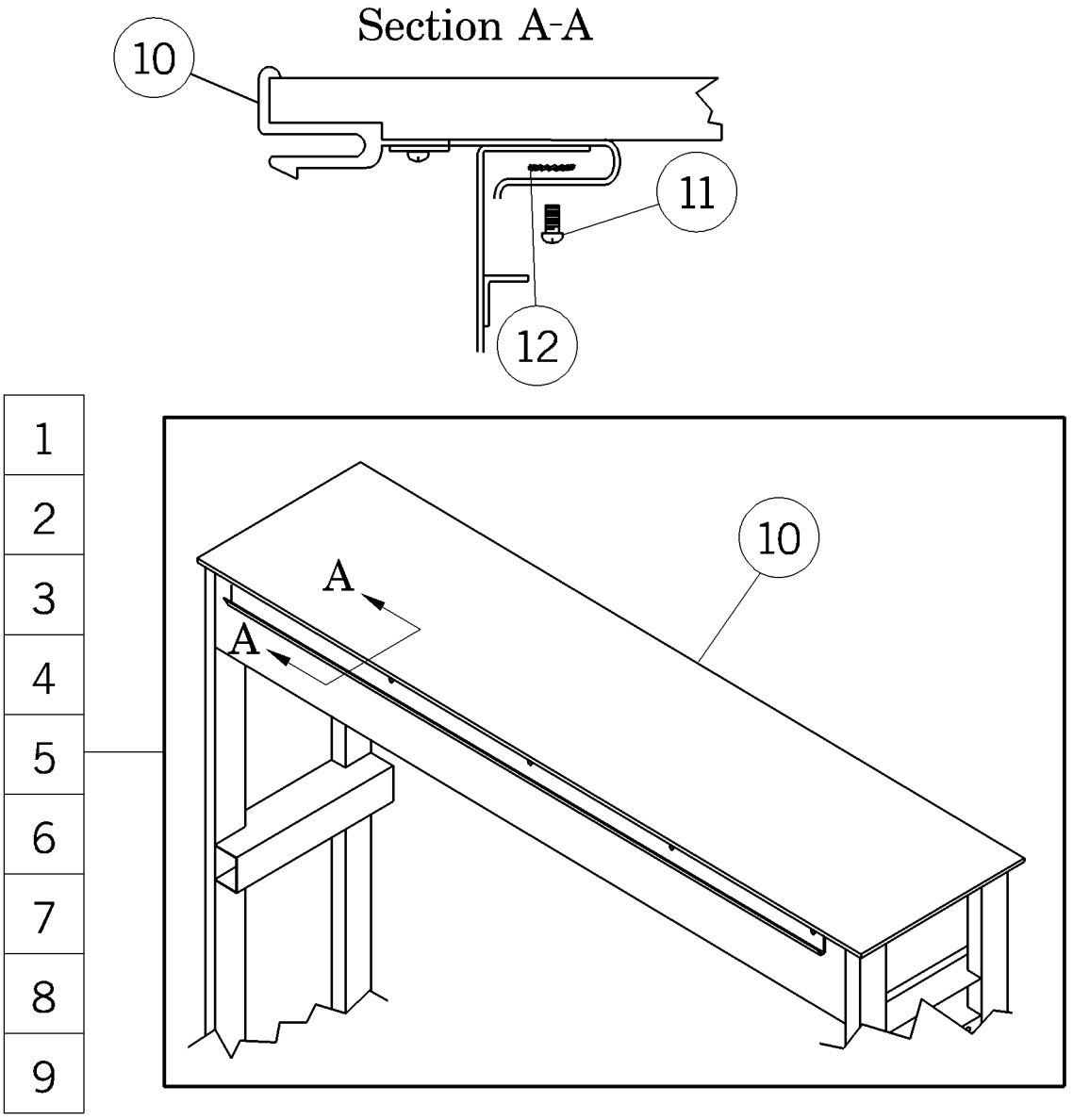

Table 5-33. Top Shelf for Level II Frame Assemblies, Single and Double Sided

Item Number	Part Number	Quantity	Description
1	10015721 (1001)*	1	Level II top shelf, chase single sided
2	10015722 (1001)*	1	Level II top shelf, 3' single sided
3	10015723 (1001)*	1	Level II top shelf, 4' single sided
4	10015724 (1001)*	1	Level II top shelf, chase double sided
5	10015725 (1001)*	1	Level II top shelf, 3' double sided
6	10015726 (1001)*	1	Level II top shelf, 4' double sided
7	10015731 (1001)*	1	Level II top shelf, chase
8	10015732 (1001)*	1	Level II top shelf, 3'
9	10015733 (1001)*	1	Level II top shelf, 4'
10	54576 (1001)* or 54577 (1001)* or 54578 (1001)* or 54589 (1001)* or 54590 (1001)* or 54591 (1001)* or 54616 (1001)* or 54618 (1001)* or 54617 (1001)*	1 1 1 1 1 1 1 1 1	Top shelf, chase with gas mounting (used on 100157-21) Top shelf, 3' with gas mounting (used on 100157-22) Top shelf, 4' with gas mounting (used on 100157-23) Shelf assembly (used on 100157-24) Shelf assembly (used on 100157-25) Shelf assembly (used on 100157-26) Shelf top, chase (used on 100157-31) Shelf top, 3' (used on 100157-32) Shelf top, 4' (used on 100157-33)
11	50854-03 (1001)	4	Screw
12	18933 (1001)	1 or 2	Washer (used on 100157-21, 22 and 23) Washer (used on 100157-24, 25 and 26)

* Specify high pressure laminate color.

Center Shelf for Level lll Frame Assemblies, Single and Double Sided

Figure 5-35. Center Shelf for Level lll Frame Assemblies, Single and Double Sided

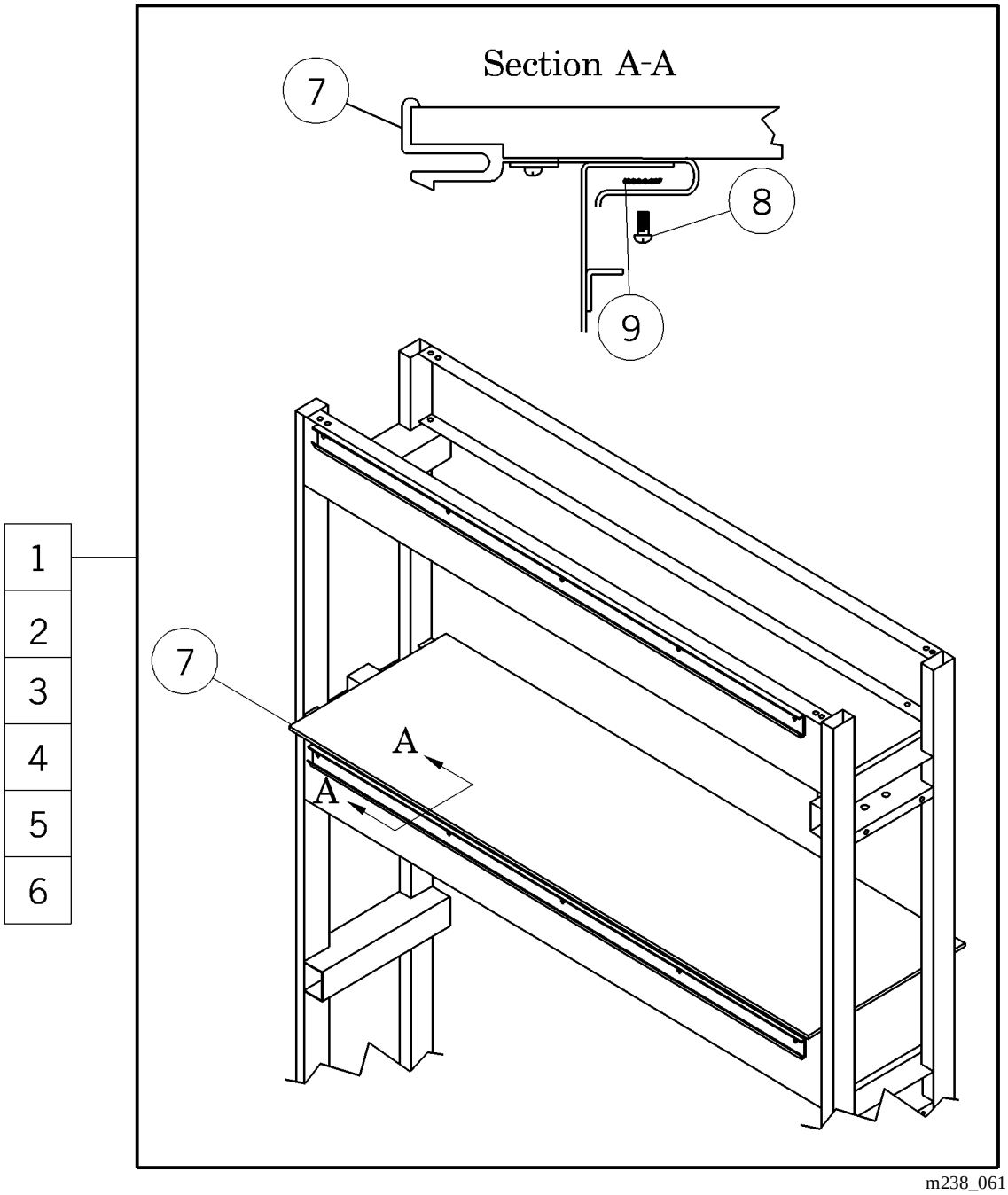

Table 5-34. Center Shelf for Level lll Frame Assemblies, Single and Double Sided

Item Number	Part Number	Quantity	Description
1	10015711 (1001)*	1	Level III center shelf, chase single sided
2	10015712 (1001)*	1	Level III center shelf, 3' single sided
3	10015713 (1001)*	1	Level III center shelf, 4' single sided
4	10015714 (1001)*	1	Level III center shelf, chase double sided
5	10015715 (1001)*	1	Level III center shelf, 3' double sided
6	10015716 (1001)*	1	Level III center shelf, 4' double sided
7	5324801 (1001)* or 5324802 (1001)* or 5324803 (1001)* or 5324901 (1001)* or 5324902 (1001)* or 5324903 (1001)*	1 1 1 1 1 1	Shelf assembly (used on 100157-11) Shelf assembly (used on 100157-12) Shelf assembly (used on 100157-13) Shelf assembly (used on 100157-14) Shelf assembly (used on 100157-15) Shelf assembly (used on 100157-16)
8	50854-03 (1001)	4	Screw
9	18933 (1001)	1 or 2	Washer (used on 100157-11, 12 and 13) Washer (used on 100157-14, 15 and 16)

* Specify high pressure laminate color.

Top Shelf for Level III Frame Assemblies

Figure 5-36. Top Shelf for Level III Frame Assemblies

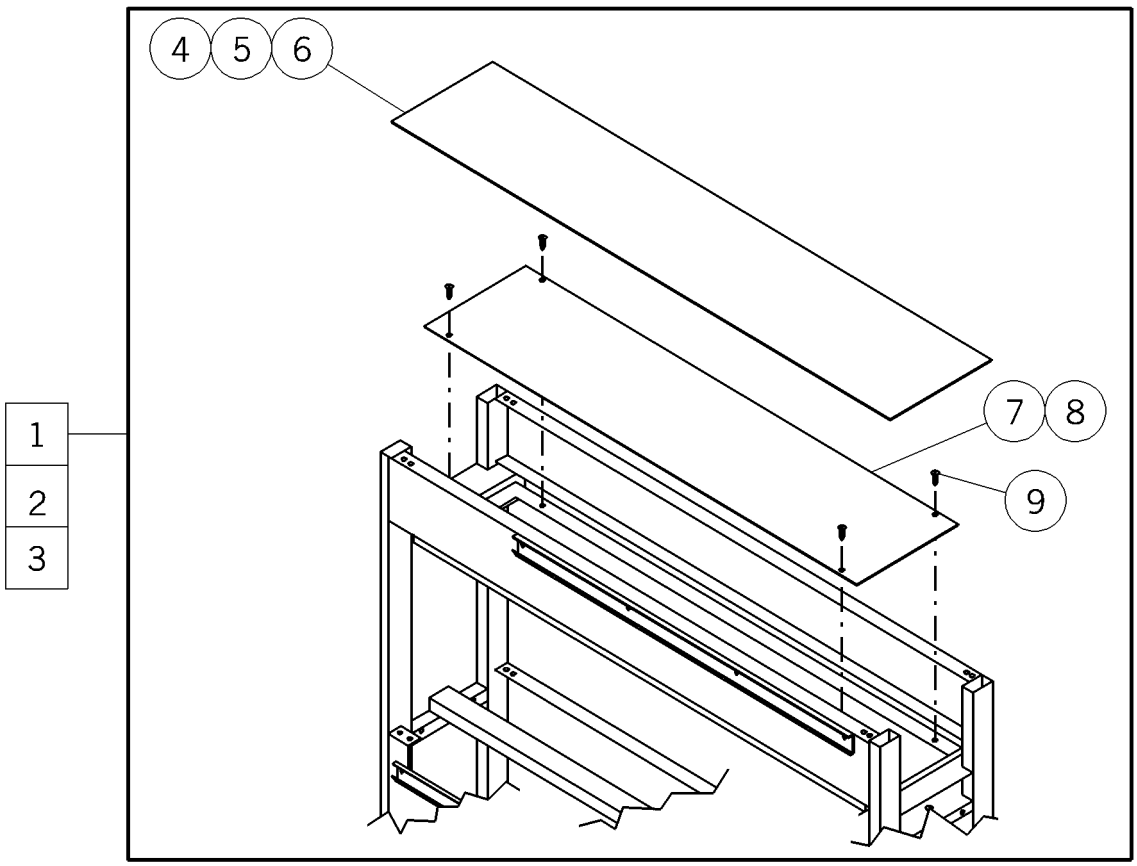

m238_064

Table 5-35. Top Shelf for Level III Frame Assemblies

Item Number	Part Number	Quantity	Description
1	10015811 (1001)*	1	Level III top shelf, chase 3’
2	10015812 (1001)*	1	Level III top shelf, 4’
3	10015813 (1001)*	1	Level III top shelf, chase 3’
4	52804 (1001)*	1	Top shelf, chase (used on 100158-11)
5	52752 (1001)*	1	Top shelf, 4’ (used on 100158-12)
6	53390 (1001)*	1	Top shelf, 3’ (used on 100158-13)
7	5289939 (1001)	1	Down lighting cover (used on 100158-11 and 13)
8	5290039 (1001)	1	Down lighting cover (used on 100158-12)
9	50891-02 (1001)	4	Screw

* Specify high pressure laminate color.

Down Lighting for Outrigger or Plain Frame Assemblies

Figure 5-37. Down Lighting for Outrigger or Plain Frame Assemblies

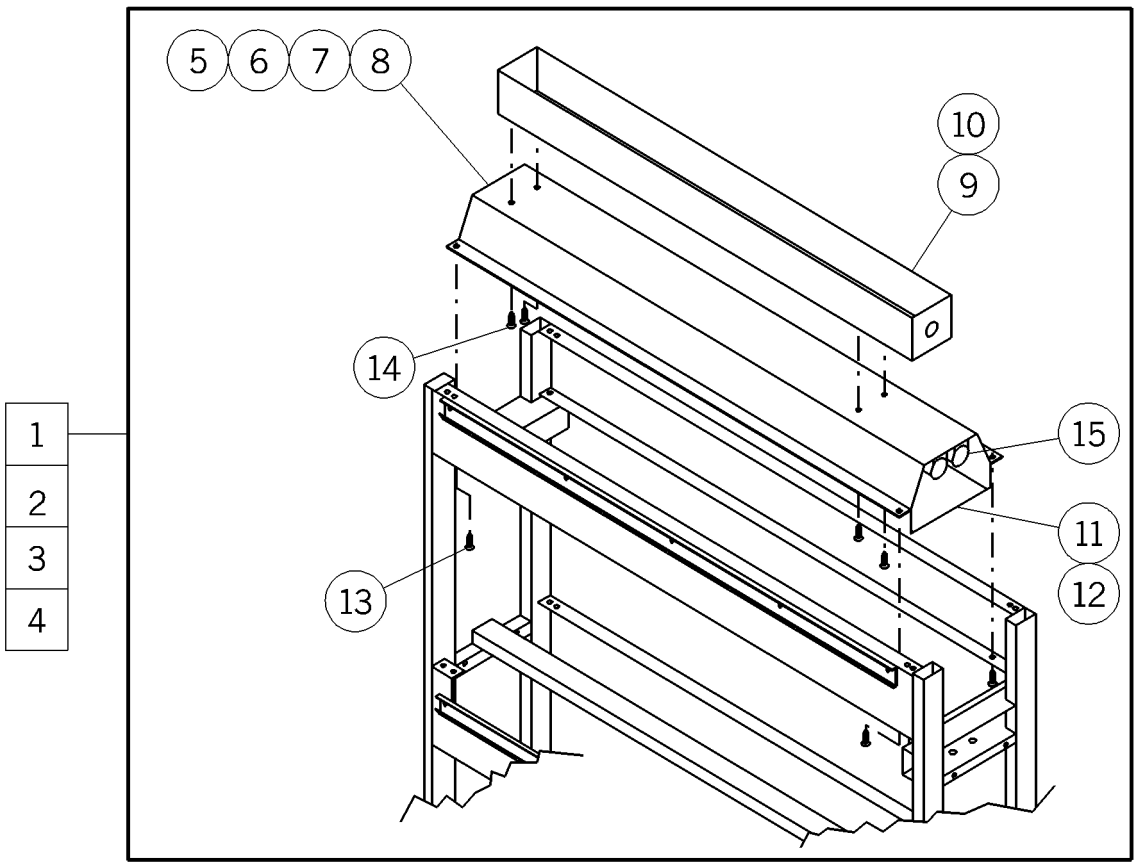

m238_062

Table 5-36. Down Lighting for Outrigger or Plain Frame Assemblies

Item Number	Part Number	Quantity	Description
1	10015513 (1001)	1	3’ down light, 120V
2	10015514 (1001)	1	3’ down light, 277V
3	10015517 (1001)	1	4’ down light, 120V
4	10015518 (1001)	1	4’ down light, 277V
5	5286003 (1001)	1	3’ light assembly (used on 100155-13)
6	5286004 (1001)	1	4’ light assembly (used on 100155-14)
7	5286007 (1001)	1	4’ light assembly (used on 100155-17)
8	5286008 (1001)	1	4’ light assembly (used on 100155-18)
9	5296739 (1001)	1	End and side assembly
10	5296839 (1001)	1	4’ end and side assembly
11	52897 (1001)	1	3’ lens - down light
12	52896 (1001)	1	4’ lens - down light
13	393 (1001)	4	Screw
14	50891-02 (1001)	4	Screw
15	52830 (1001)	4	Lampholder

Down Lighting for Chase Frame Assemblies

Figure 5-38. Down Lighting for Chase Frame Assemblies

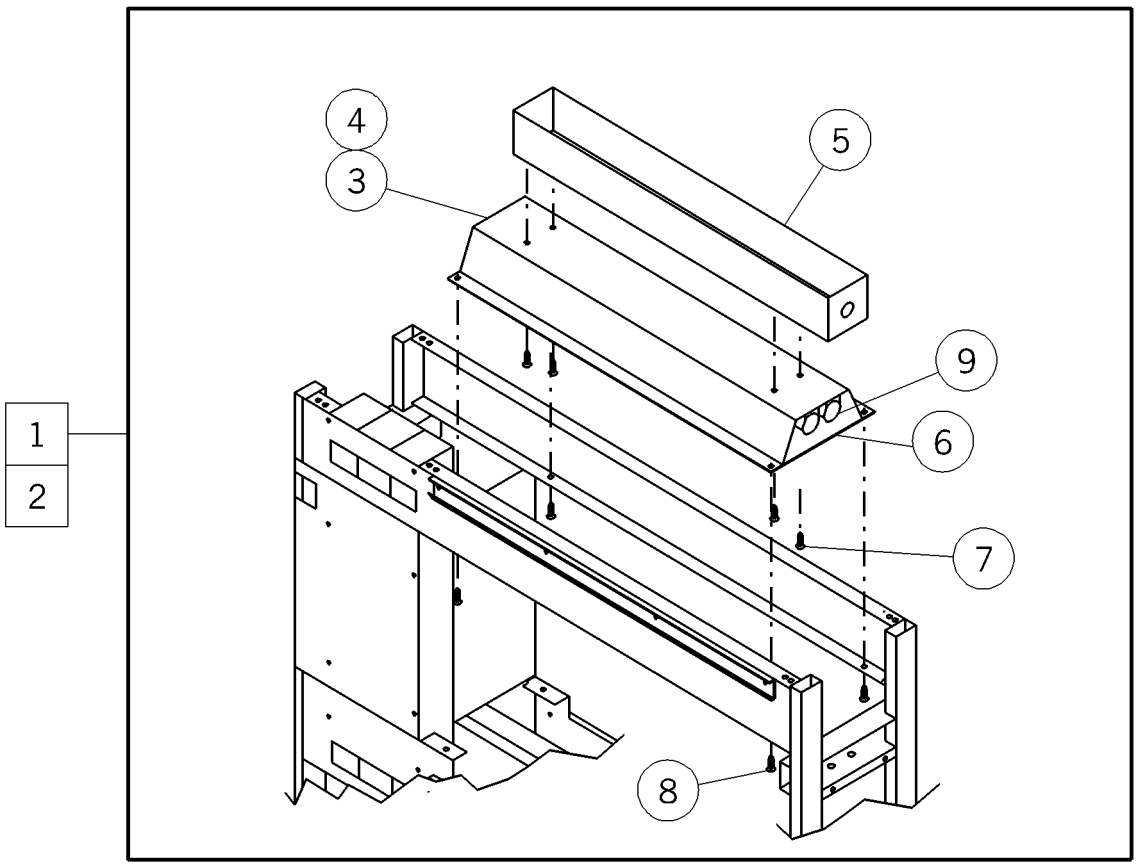

m238_063

Table 5-37. Down Lighting for Chase Frame Assemblies

Item Number	Part Number	Quantity	Description
1	10015521 (1001)	1	Down light chase, 120V
2	10015522 (1001)	1	Down light chase, 277V
3	5298103 (1001)	1	Light assembly - down chase (used on 100155-21)
4	5298104 (1001)	1	Light assembly - down chase (used on 100155-22)
5	5296739 (1001)	1	End and side assembly
6	52966 (1001)	1	Lens - down light chase
7	50891-02 (1001)	4	Screw
8	393 (1001)	4	Screw
9	52830 (1001)	4	Lampholder

Indirect Lighting for Chase Frame Assemblies

Figure 5-39. Indirect Lighting for Chase Frame Assemblies

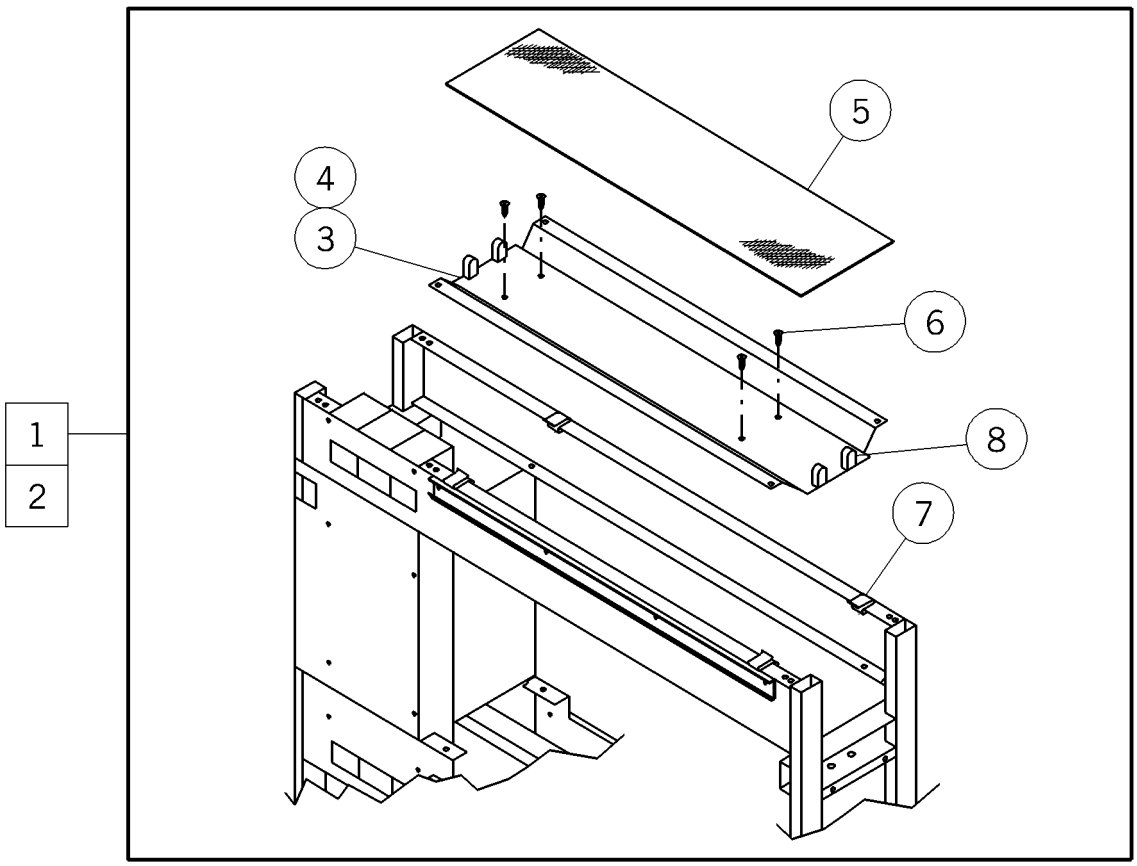

m238_065

Table 5-38. Indirect Lighting for Chase Frame Assemblies

Item Number	Part Number	Quantity	Description
1	10015421 (1001)	1	Indirect light chase, 120V
2	10015422 (1001)	1	Indirect light chase, 277V
3	5286111 (1001)	1	Light assembly - indirect (used on 100154-21)
4	5286112 (1001)	1	Light assembly - indirect (used on 100154-22)
5	52895 (1001)	1	Lens - indirect
6	50891-02 (1001)	4	Screw
7	56215 (1001)	4	Lens retainer
8	52830 (1001)	4	Lampholder

Duplex Outlet Receptacles

Figure 5-40. Duplex Outlet Receptacles

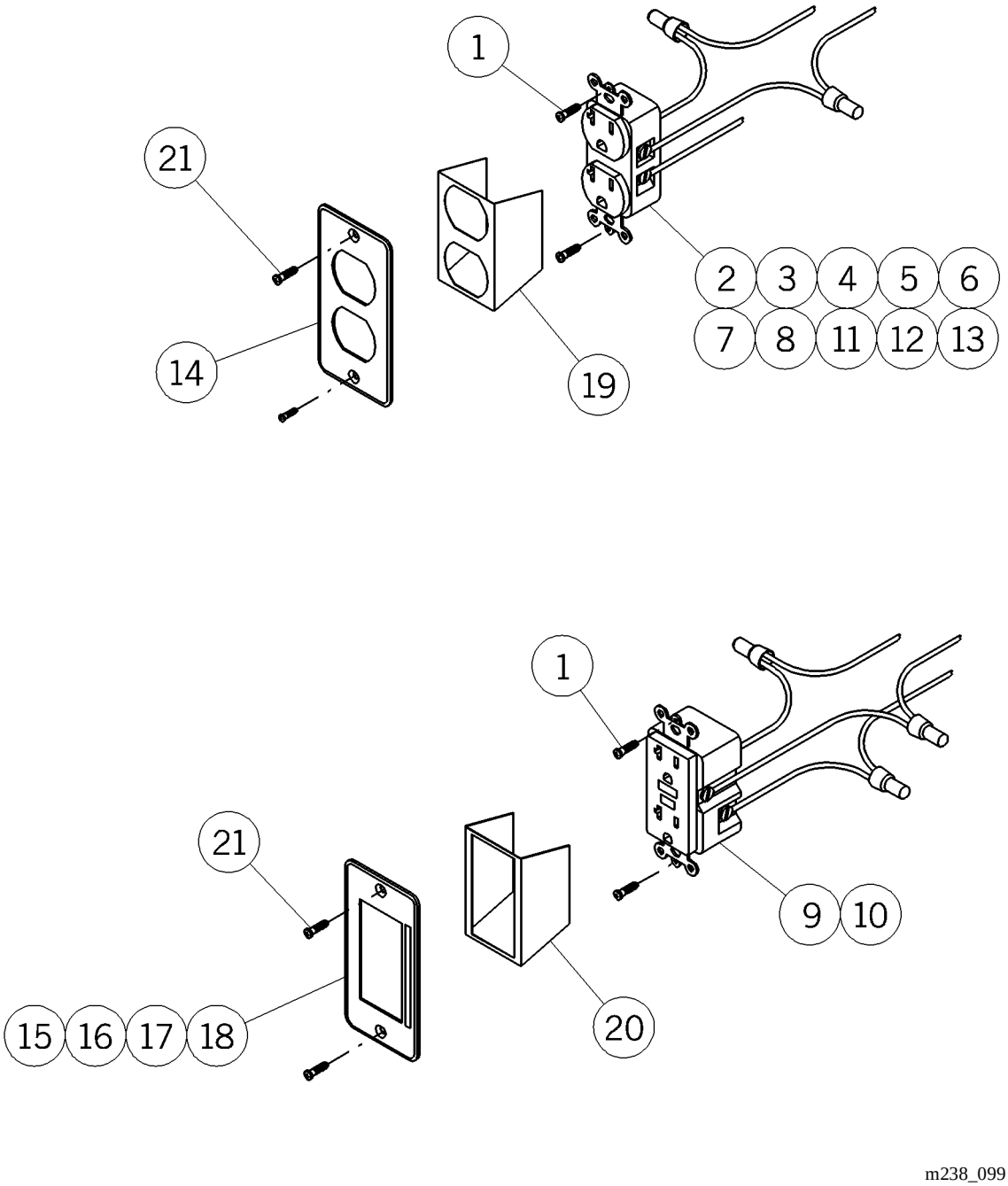

m238_099

Table 5-39. Duplex Outlet Receptacles

Item Number	Part Number	Quantity	Description
1	16115 (1001)	2	Screw
2	28439 (1001)	1	Outlet, duplex 20A (ivory)
3	51129 (1001)	1	Outlet, duplex 15A (ivory)
4	28436 (1001)	1	Outlet, duplex 20A (red)
5	51130 (1001)	1	Outlet, duplex 15A (red)
6	33798 (1001)	1	Outlet, pediatric 15A (ivory)
7	33799 (1001)	1	Outlet, pediatric 15A (red)
8	52412 (1001)	1	Outlet, duplex 15A, isolated power (orange)
9	51036 (1001)	1	Outlet, duplex GFCI 20A (ivory)
10	54743 (1001)	1	Outlet, duplex GFCI 20A (red)
11	55147 (1001)	1	Outlet, duplex 20A (neutral)
12	52414 (1001)	1	Outlet, duplex 20A lighted (ivory)
13	52413 (1001)	1	Outlet, duplex 15A lighted (ivory)
14	52227 (1001)	1	Faceplate, duplex (almond)
15	55207 (1001)	1	Label, GFCI warning
16	55166 (1001)	1	Faceplate, engraved GFCI (almond)
17	55167 (1001)	1	Faceplate, engraved GFCI (almond)
18	55168 (1001)	1	Faceplate, engraved GFCI (almond)
19	56598 (1001)	1	Insulator, duplex (optional)
20	56878 (1001)	1	Insulator, decorative style (optional)
21	50590 (1001)	2	Screw

Simplex and Hubbellock Outlet Receptacles

Figure 5-41. Simplex and Hubbellock Outlet Receptacles

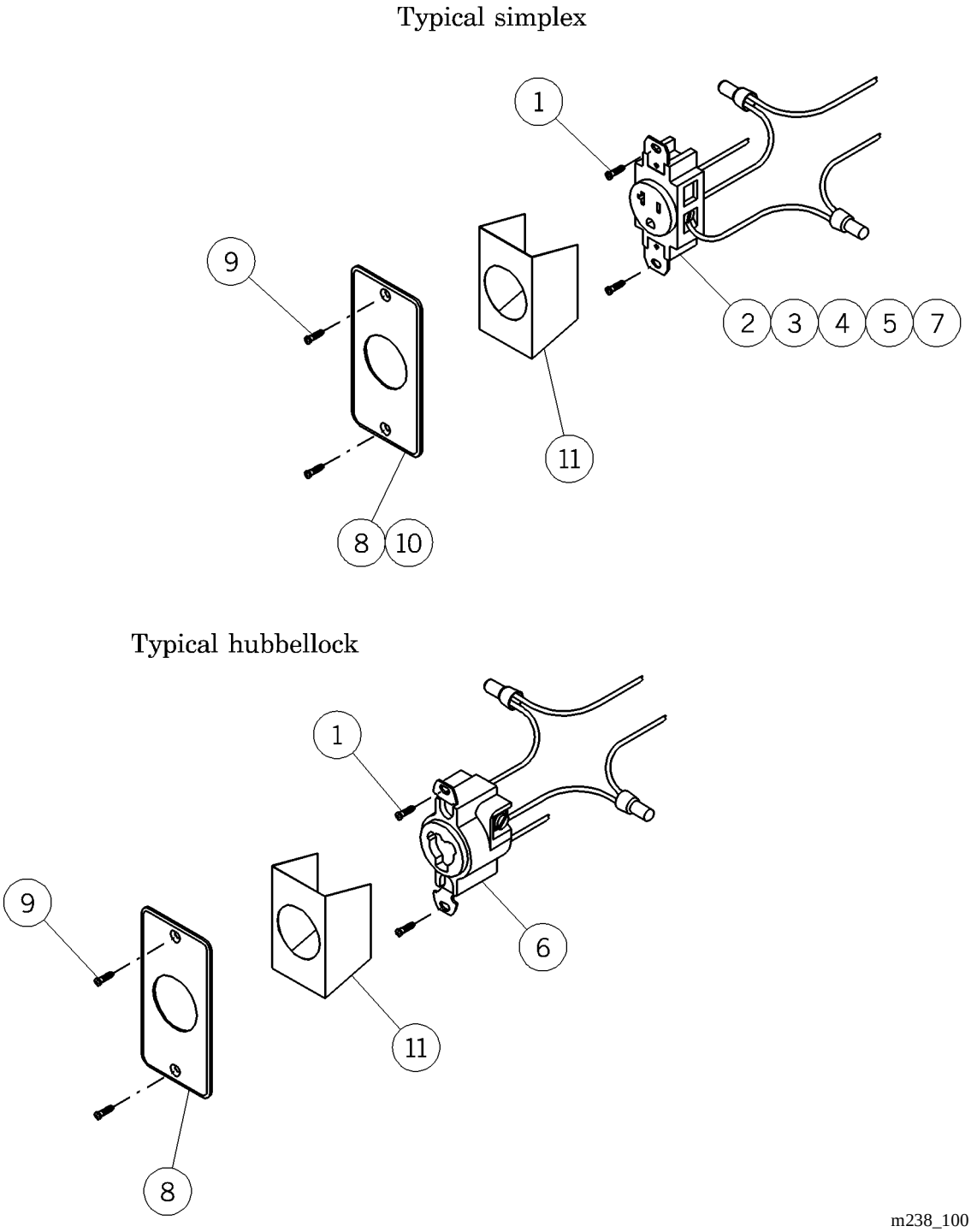

Table 5-40. Simplex and Hubbellock Outlet Receptacles

Item Number	Part Number	Quantity	Description
1	16115 (1001)	2	Screw
2	28438 (1001)	1	Outlet, simplex 20A (ivory)
3	18061 (1001)	1	Outlet, simplex 15A (ivory)
4	28437 (1001)	1	Outlet, simplex 20A (red)
5	51042 (1001)	1	Outlet, simplex 15A (red)
6	18062 (1001)	1	Outlet, 20A (twist lock)
7	51024 (1001)	1	Outlet, simplex 15A (orange)
8	52228 (1001)	1	Faceplate, simplex (almond)
9	50590 (1001)	2	Screw
10	52229 (1001)	1	Faceplate (plain), twist lock
11	56599 (1001)	1	Insulator, simplex (optional)

Ground Receptacles

Figure 5-42. Ground Receptacles

Typical ground receptacle

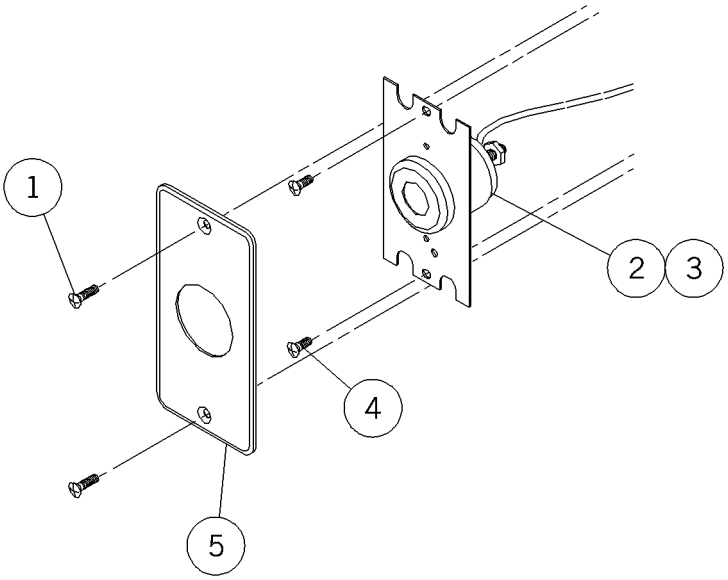

Typical duplex ground receptacle

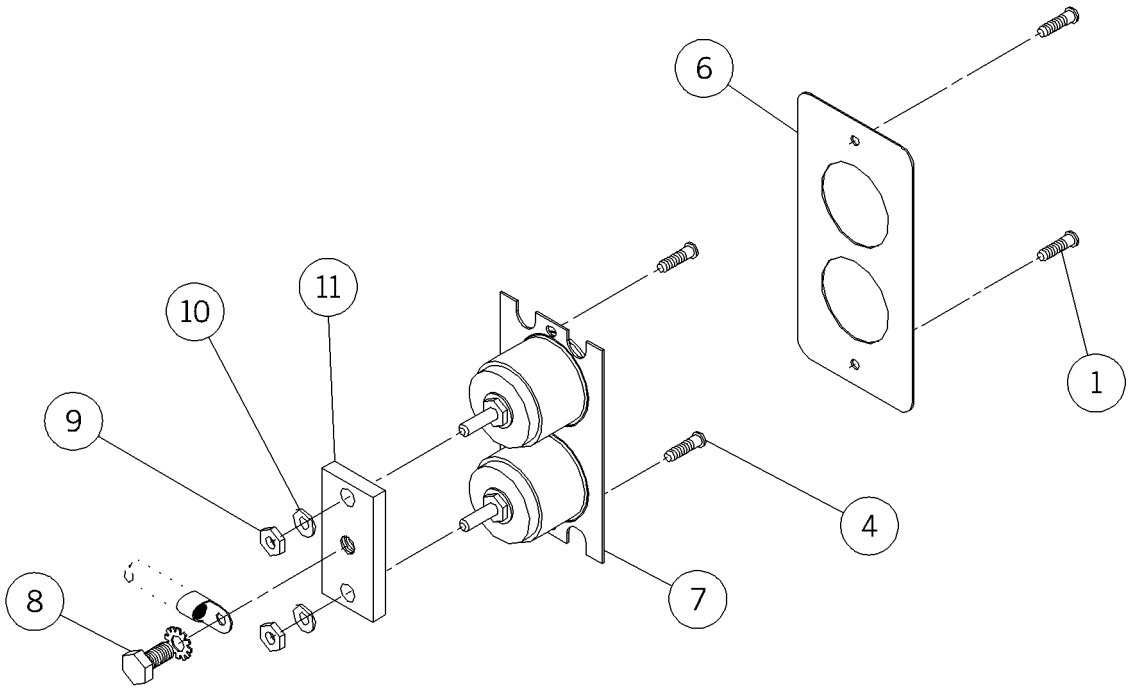

m238_101

Table 5-41. Ground Receptacles

Item Number	Part Number	Quantity	Description
1	50590 (1001)	2	Screw
2	17111 (1001)	1	Ground receptacle, locking (Hampden)
3	56694 (1001)	1	Ground receptacle, non-locking
4	16115 (1001)	2	Screw
5	52230 (1001)	1	Faceplate, ground receptacle (almond)
6	56903 (1001)	1	Faceplate, duplex ground (almond)
7	31728 (1001)	1	Mounting plate, duplex ground
8	50798 (1001)	1	Screw
9	56827 (1001)	1	Spacer, ground receptacle
10	56825 (1001)	1	Lockwasher
11	56906 (1001)	1	Tie bar, duplex ground (1) gang

Monitor Slide—P1007N2

Figure 5-43. Monitor Slide—P1007N2

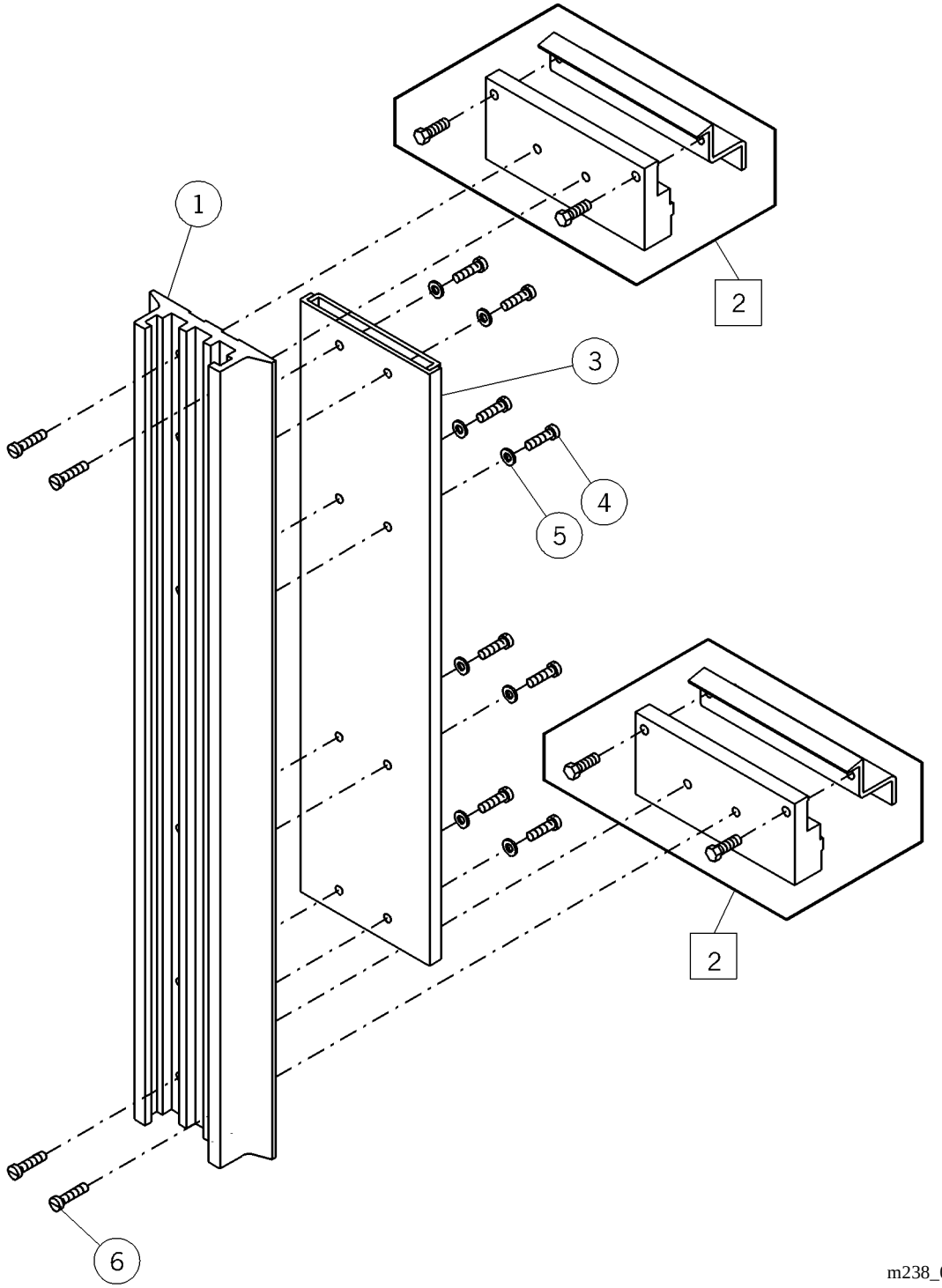

Table 5-42. Monitor Slide—P1007N2

Item Number	Part Number	Quantity	Description
1	53149 (1001)	1	Monitor track
2	51510 (1001)	2	Clamp assembly
3	53146 (1001)	1	Channel assembly
4	53063 (1001)	8	Screw
5	53065-01 (1001)	8	Washer
6	51625 (1001)	4	Screw

Opthalmoscope Mount—P1020S1, P1020S2, P1020S4

Figure 5-44. Opthalmoscope Mount—P1020S1, P1020S2, P1020S4

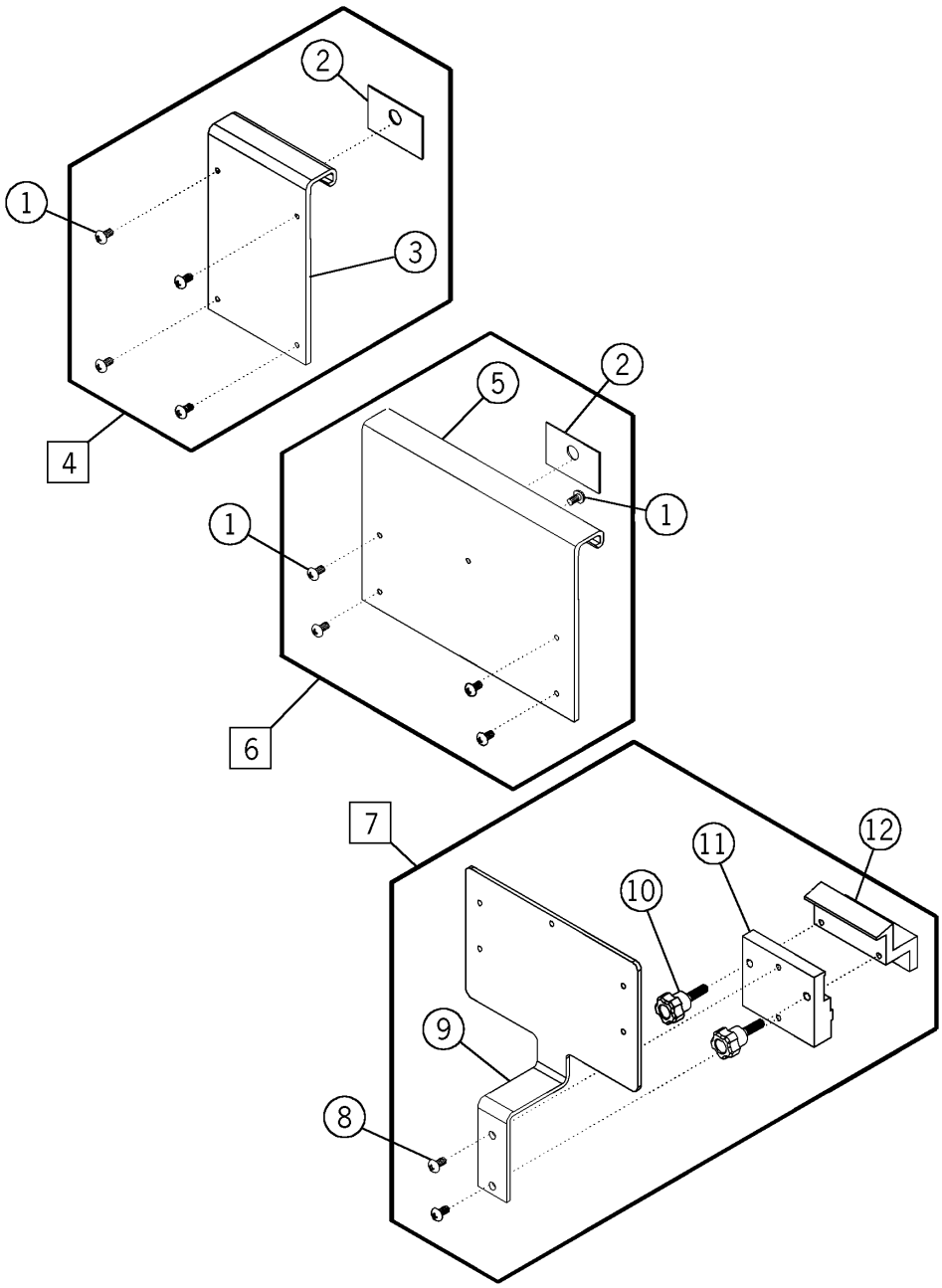

m238_068

Table 5-43. Opthalmoscope Mount—P1020S1, P1020S2, P1020S4

Item Number	Part Number	Quantity	Description
1	52604-02 (1001)	4 or 5	Screw
2	52793 (1001)	1	Skid pad
3	55830pl (1001)	1	Hook, opthalmoscope
4	P1020S1 (1001)	1	Opthalmoscope mount
5	57893pl (1001)	1	Hook, opthalmoscope
6	P1020S2 (1001)	1	Opthalmoscope mount
7	P1020S4 (1001)	1	Opthalmoscope mount - uniflex
8	5325801 (1001)	2	Screw
9	5789539 (1001)	1	Mount, opthalmoscope
10	52569 (1001)	2	Knob
11	52571 (1001)	1	Trough clamp - front
12	52572 (1001)	1	Trough clamp - rear

Aneroid Sphygmomanometer—P978-01 and Mount—P102503, Mercurial Sphygmomanometer—P977-01 and Mount—P102402

Figure 5-45. Aneroid Sphygmomanometer—P978-01 and Mount—P102503, Mercurial Sphygmomanometer—P977-01 and Mount—P102402

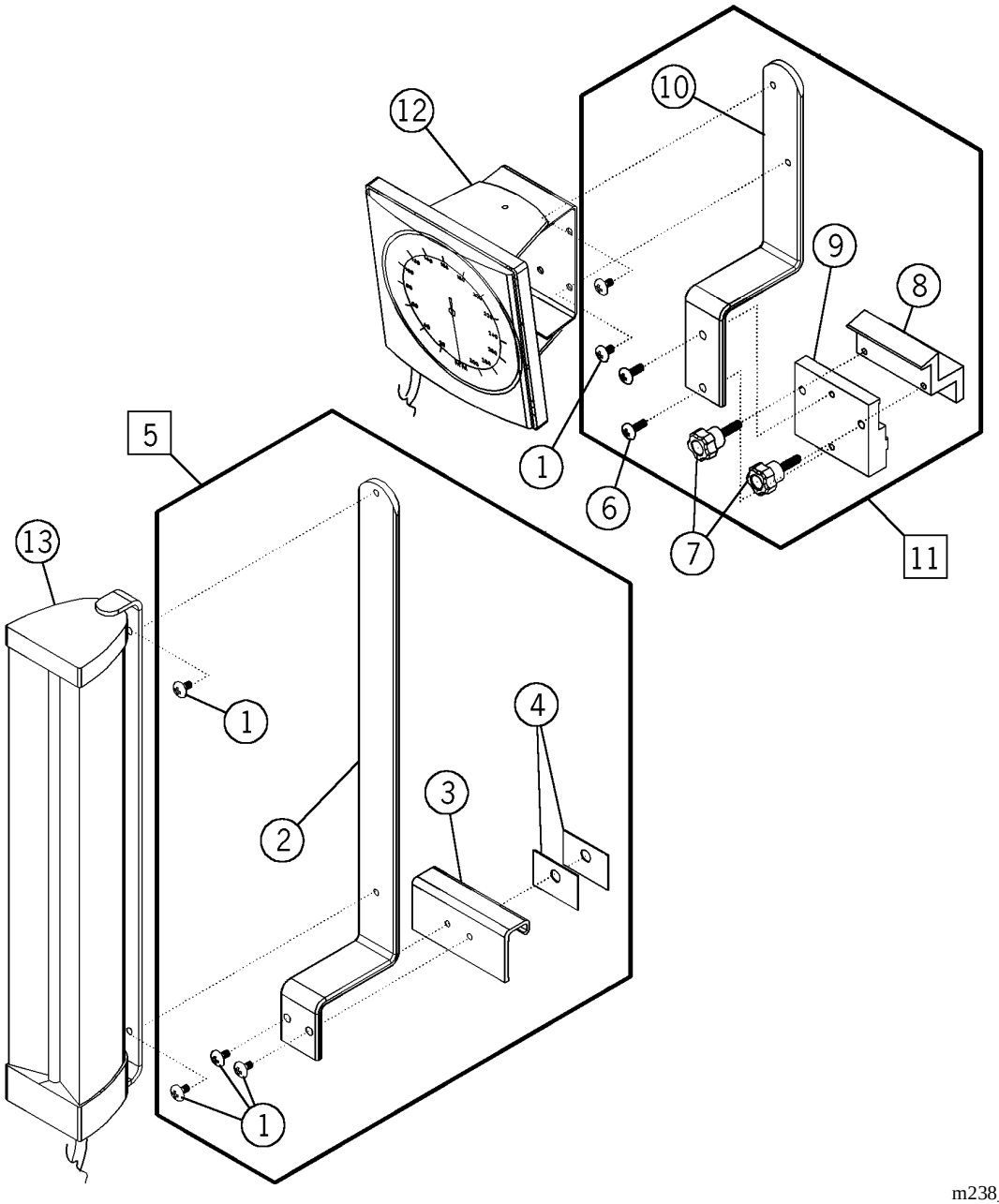

m238_070

Table 5-44. Aneroid Sphygmomanometer—P978-01 and Mount - P102503, Mercurial Sphygmomanometer—P977-01 and Mount—P102402

Item Number	Part Number	Quantity	Description
1	54610-01 (1001)	2 or 4	Screw
2	5881139 (1001)	1	Bracket, mercury sphygmomanometer
3	5881839 (1001)	1	Hook, sphygmomanometer mount
4	52793 (1001)	1	Skid pad
5	P102402 (1001)	1	Sphygmomanometer mount, columnar (mercurial)
6	51637 (1001)	2	Screw
7	52569 (1001)	2	Knob
8	52572 (1001)	1	Trough clamp - rear
9	52571 (1001)	1	Trough clamp - front
10	5881239 (1001)	1	Bracket, aneroid sphygmomanometer
11	P102503 (1001)	1	Sphygmomanometer mount, aneroid
12	P978-01 (1001)	1	Aneroid sphygmomanometer
13	P977-01 (1001)	1	Mercury sphygmomanometer

Cuff Basket—P102802

Figure 5-46. Cuff Basket—P102802

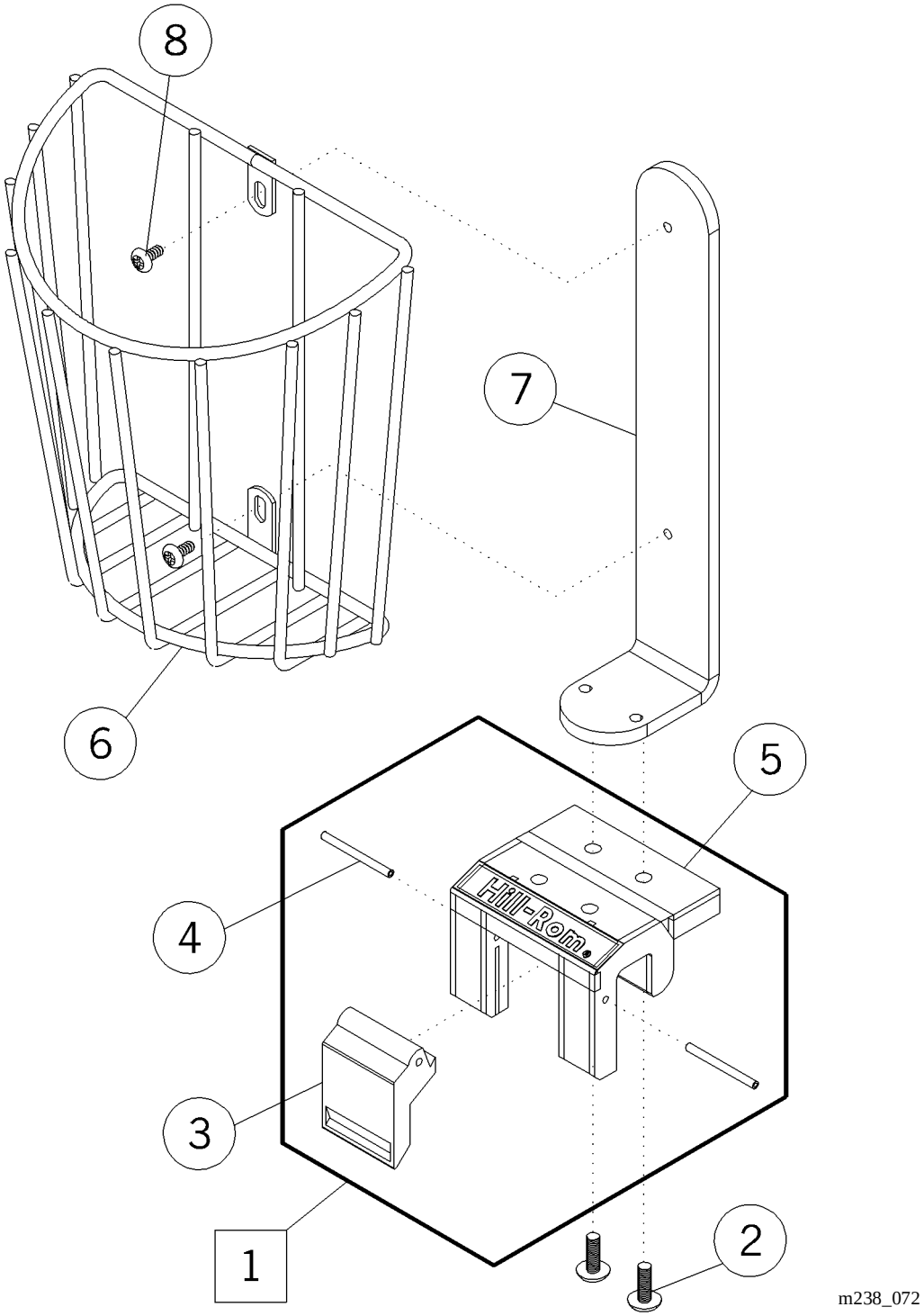

Table 5-45. Cuff Basket—P102802

Item Number	Part Number	Quantity	Description
1	54885 (1001)	1	Accessory mount assembly
2	15338 (1001)	2	Screw
3	54621 (1001)	1	Latch
4	52457 (1001)	2	Roll pin
5	54880 (1001)	1	Accessory mount
6	56875 (1001)	1	Cuff basket
7	57010-39 (1001)	1	Bracket, cuff
8	54610-01 (1001)	2	Screw

Bird Blender Mount, Extends Down—P1020B1

Figure 5-47. Bird Blender Mount, Extends Down—P1020B1

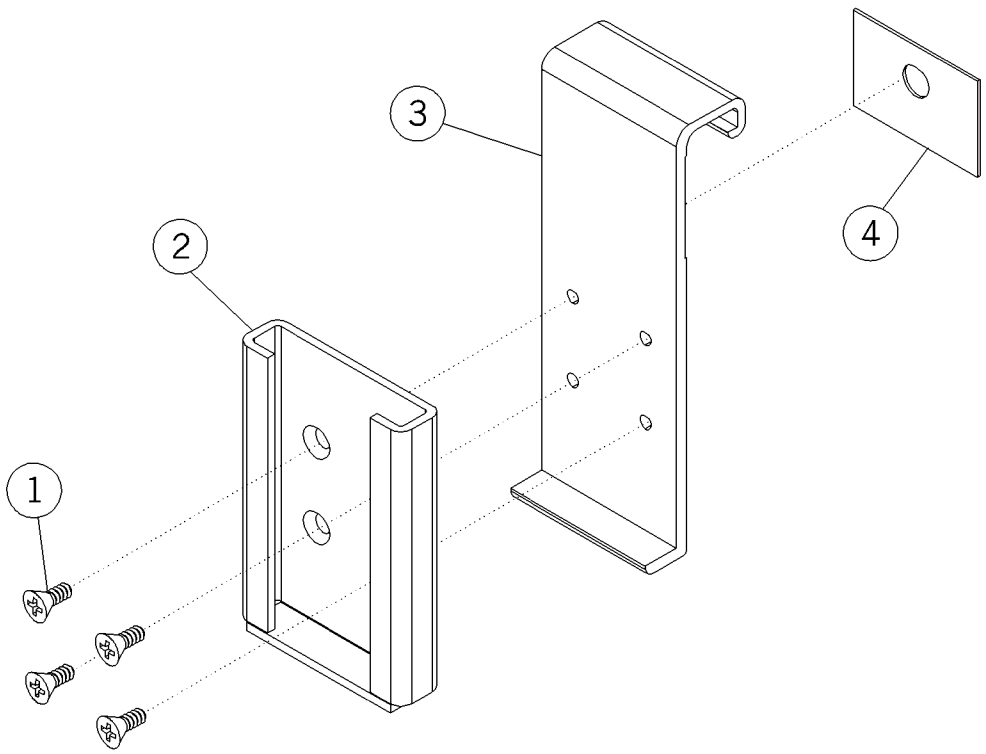

m238_073

Table 5-46. Bird Blender Mount, Extends Down—P1020B1

Item Number	Part Number	Quantity	Description
1	5487001 (1001)	4	Screw
2	56002 (1001)	1	Dovetail bracket
3	55831pl (1001)	1	Hook, bird blender
4	52793 (1001)	1	Skid pad

Bird Blender Mount, Extends Up—P1020NB1

Figure 5-48. Bird Blender Mount, Extends Up—P1020NB1

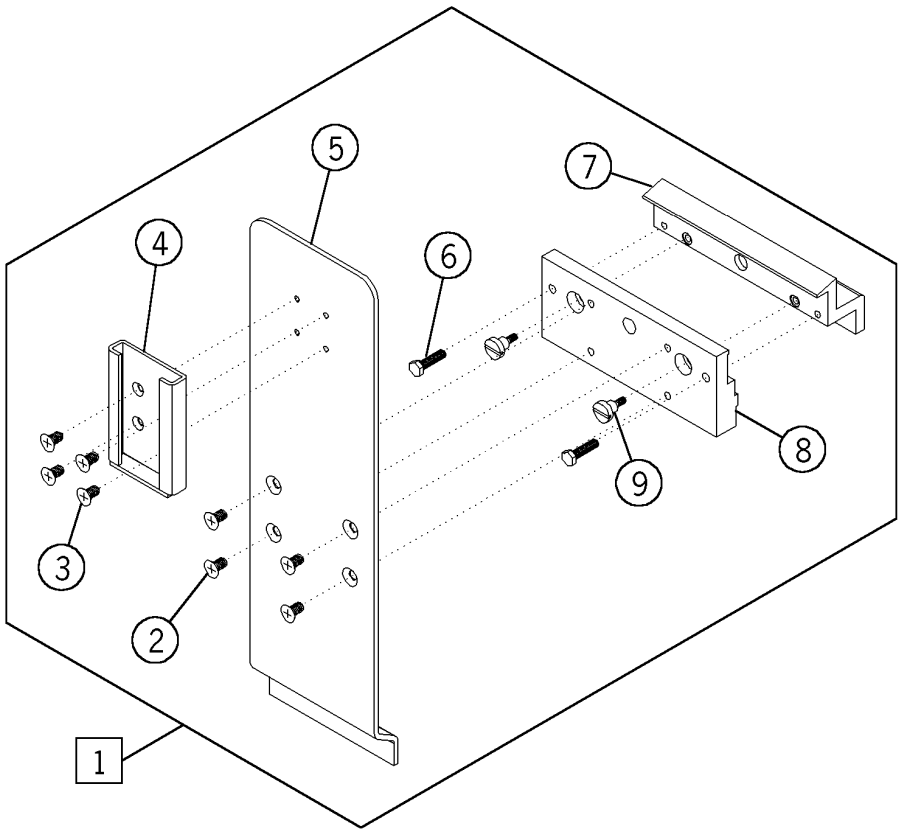

m238_074

Table 5-47. Bird Blender Mount, Extends Up—P1020NB1

Item Number	Part Number	Quantity	Description
1	56002 (1001)	1	Dovetail bracket
2	5487001 (1001)	4	Short screw, flathead
3	5254301 (1001)	4	Screw
4	1020NB1 (1001)	1	Bird blender mount
5	5600439 (1001)	1	Bird blender bracket
6	52191 (1001)	2	Screw
7	51914 (1001)	1	Trough clamp
8	51786 (1001)	1	Face clamp
9	34002 (1001)	2	Screw

Bottle Slide—P1020A1 and Extended Bottle Slide—P1020N1

Figure 5-49. Bottle Slide—P1020A1 and Extended Bottle Slide—P1020N1

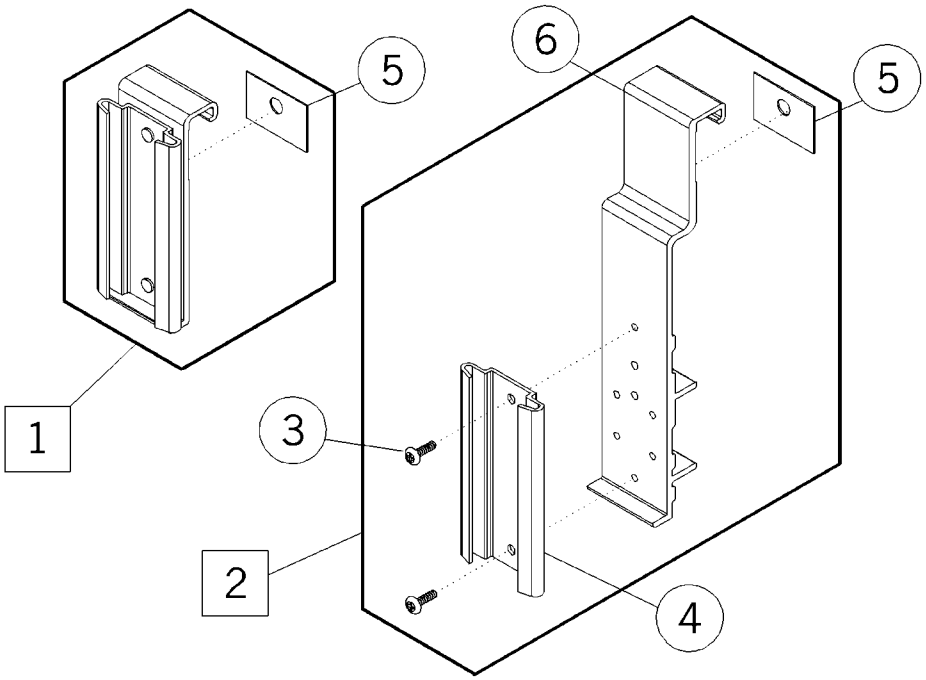

m238_075

Table 5-48. Bottle Slide—P1020A1 and Extended Bottle Slide—P1020N1

Item Number	Part Number	Quantity	Description
1	1020A1 (1001)	1	Bottle slide
2	1020N1 (1001)	1	Bottle slide
3	57018-04 (1001)	2	Screw
4	50561 (1001)	1	Bracket
5	52793 (1001)	1	Skid pad
6	57260pl (1001)	1	Bird blender bracket

Cable Organizer—P103602

Figure 5-50. Cable Organizer—P103602

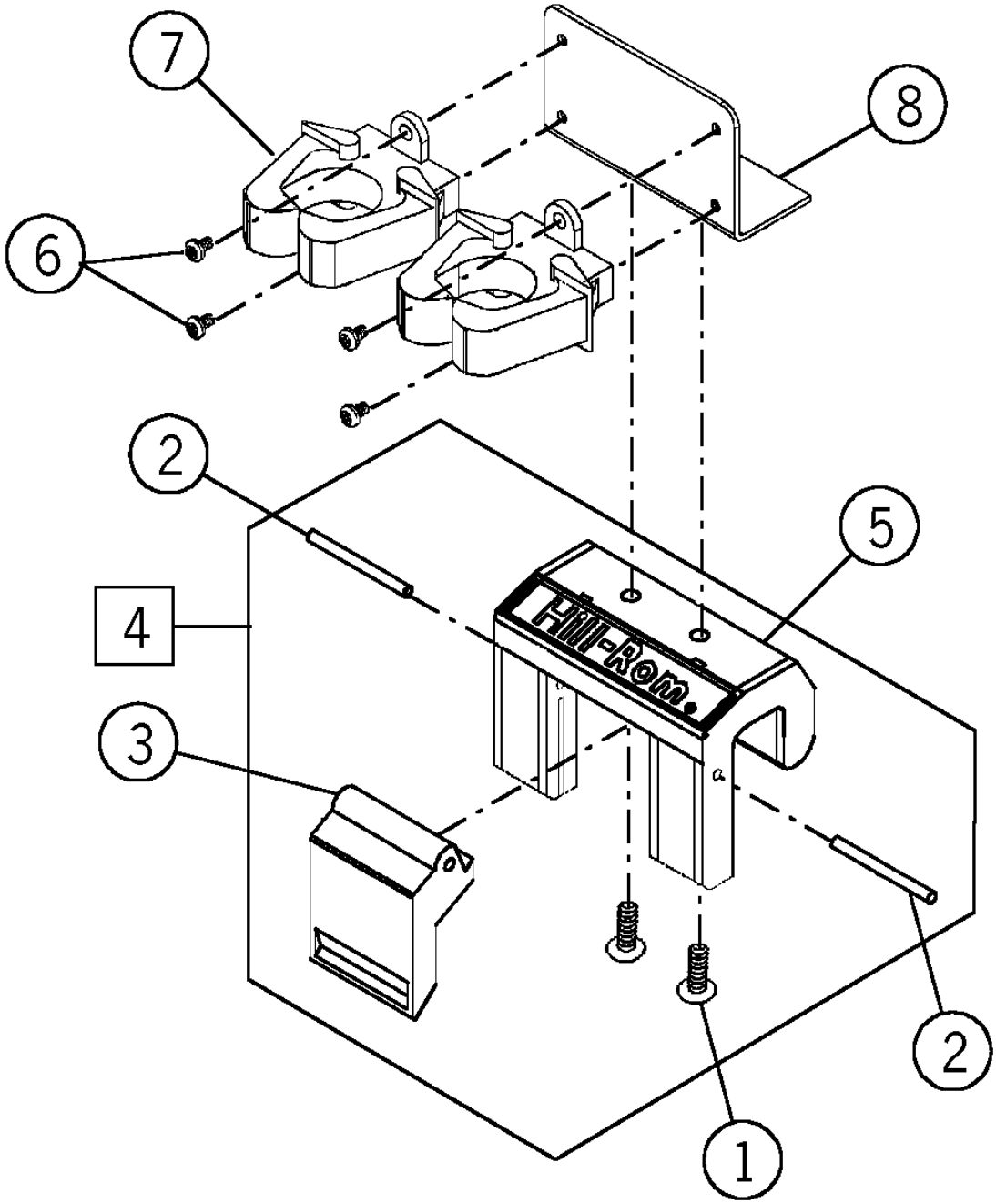

m238_076

Table 5-49. Cable Organizer—P103602

Item Number	Part Number	Quantity	Description
1	53397-03 (1001)	2	Screw
2	52457 (1001)	2	Roll pin
3	54621 (1001)	1	Latch
4	54887 (1001)	1	Accessory mount assembly
5	54882 (1001)	1	Accessory mount
6	50891-02 (1001)	4	Screw
7	53319 (1001)	2	Cable holder
8	5331839 (1001)	1	Bracket

Resuscitator Bag Holder—P102202

Figure 5-51. Resuscitator Bag Holder—P102202

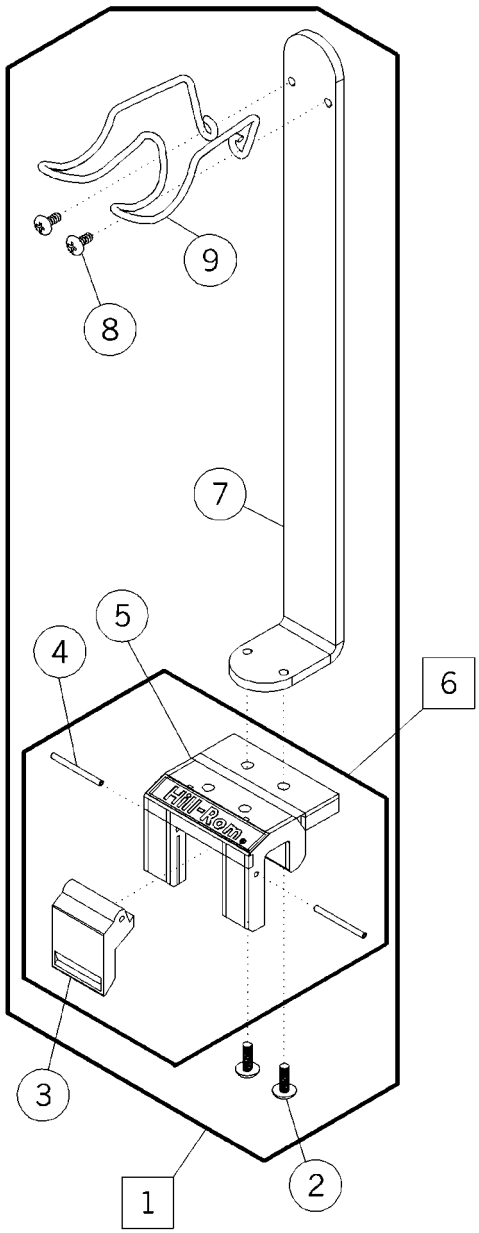

m238_077

Table 5-50. Resuscitator Bag Holder—P102202

Item Number	Part Number	Quantity	Description
1	102201 (1001)	1	Resuscitation bag holder
2	15338 (1001)	2	Screw
3	54621 (1001)	1	Latch
4	52457 (1001)	2	Roll pin
5	54880 (1001)	1	Accessory mount
6	54885 (1001)	1	Accessory mount assembly
7	5610239 (1001)	1	Bracket, resuscitation bag
8	54610-01 (1001)	2	Screw
9	51886 (1001)	1	Holder—manual resuscitator

STAT Clock, Pod Mounted—P101811

Figure 5-52. STAT Clock, Pod Mounted—P101811

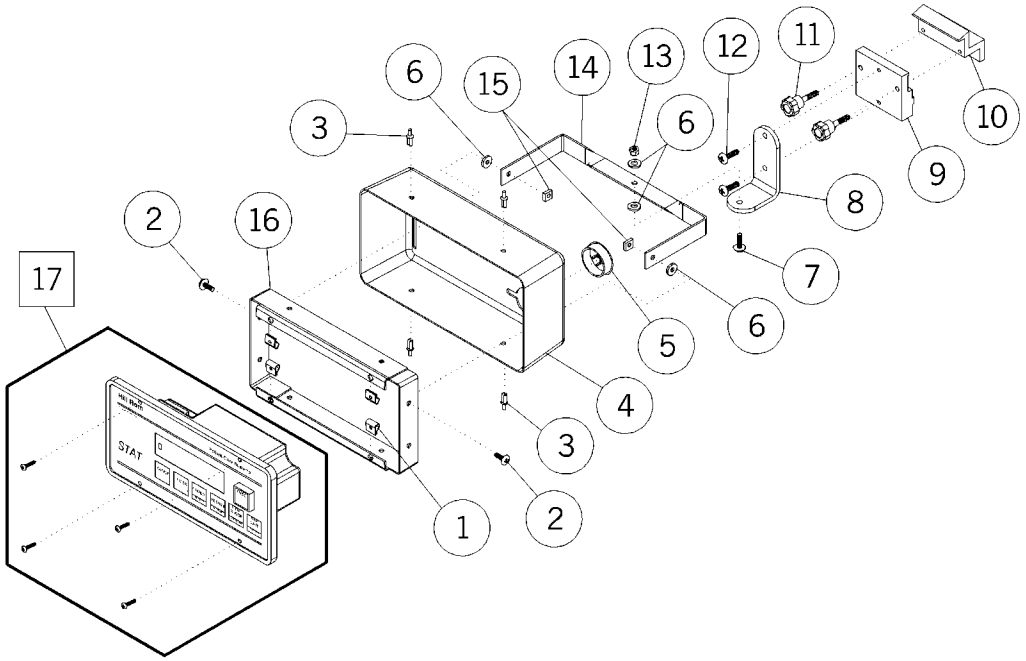

m238_078

Table 5-51. STAT Clock - Pod Mounted

Item Number	Part Number	Quantity	Description
1	31992 (1001)	4	Speed nut
2	51637 (1001)	2	Screw
3	33719 (1001)	4	Rivet
4	33701 (1001)	1	Cover
5	33720 (1001)	1	Hole plug
6	33721 (1001)	4	Nylon washer
7	52396 (1001)	1	Screw
8	53800-39 (1001)	1	Arm—STAT pod
9	52571 (1001)	1	Trough clamp—front
10	52572 (1001)	1	Trough clamp—rear
11	52569 (1001)	2	Knob
12	53258-02 (1001)	2	Screw
13	33680 (1001)	1	Locknut
14	33693 (1001)	1	Bail
15	33653 (1001)	2	Nut
16	33694 (1001)	1	Pivot frame
17	967-00 (1001)	1	STAT Clock/Timer
18	SA3784 (1001)	1	Fuse holder and cap (not shown)
19	SA4302 (1001)	1	Fuse (not shown)

Utility Hook—P102602

Figure 5-53. Utility Hook—P102602

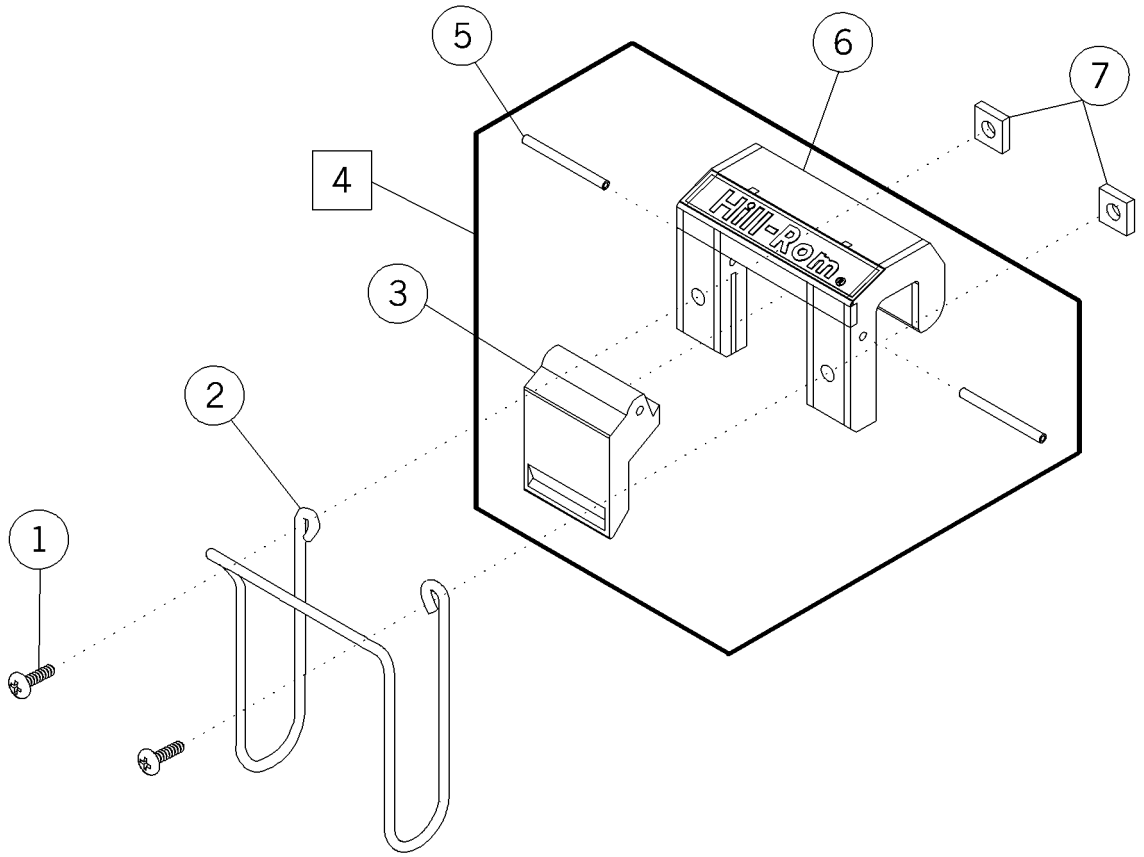

m238_079

Table 5-52. Utility Hook

Item Number	Part Number	Quantity	Description
1	15338 (1001)	2	Screw
2	51781 (1001)	1	Cuff clip
3	54621 (1001)	1	Latch
4	54886 (1001)	1	Accessory mount assembly
5	52457 (1001)	2	Roll pin
6	54881 (1001)	1	Accessory mount
7	33653 (1001)	2	Nut

Short Post Utility Mount—P972N01

Figure 5-54. Short Post Utility Mount—P972N01

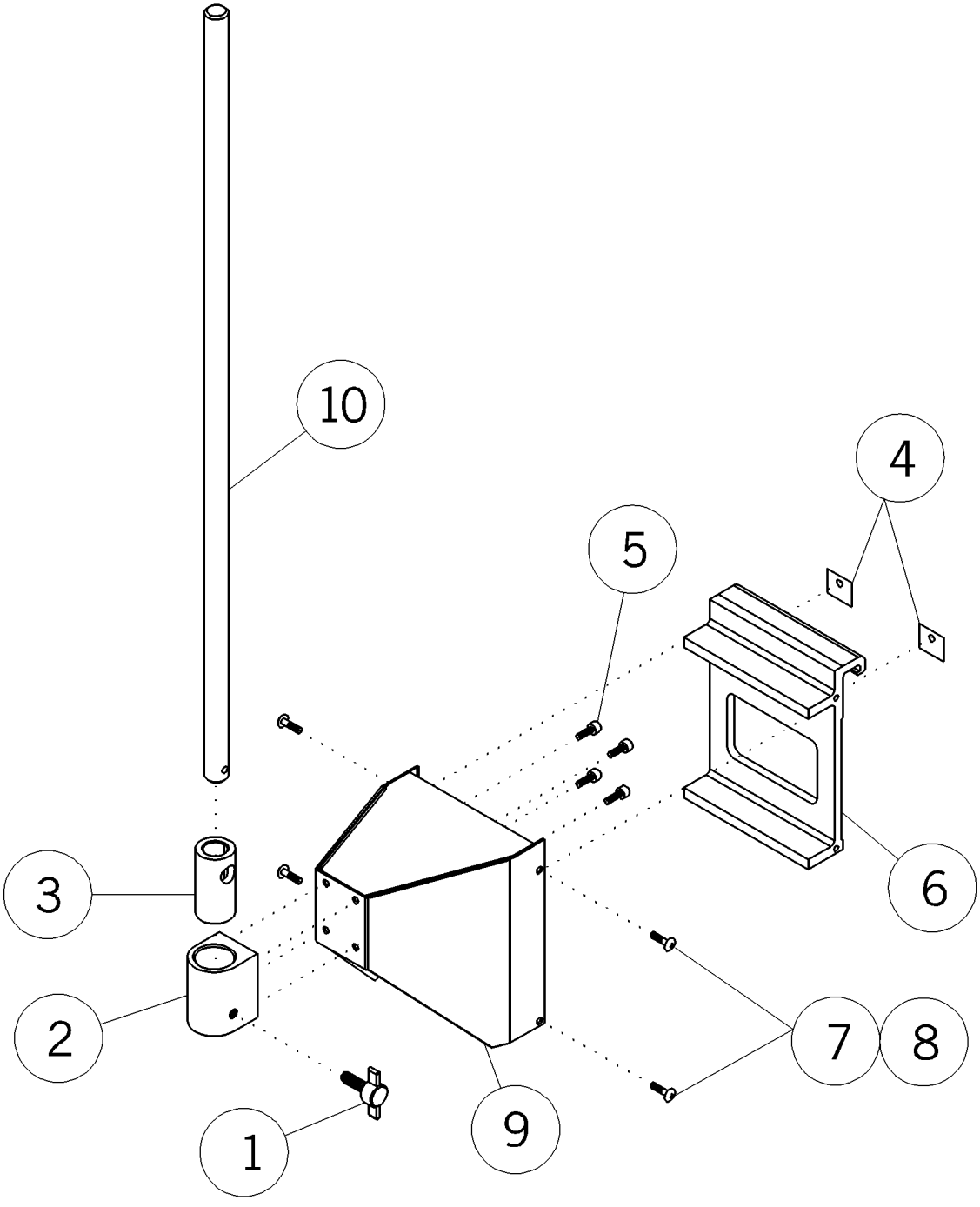

Table 5-53. Short Post Utility Mount—P972N01

Item Number	Part Number	Quantity	Description
1	53913 (1001)	1	Knob assembly
2	55969 (1001)	1	IV block
3	55949 (1001)	1	Adapter
4	52793 (1001)	2	Skid pad
5	51012 (1001)	2	Screw
6	53101 (1001)	1	Mount bracket
7	54610-01 (1001)	4	Screw
8	54610-01 (1001)	4	Screw
9	5309839 (1001)	1	Bracket assembly
10	53102 (1001)	1	Utility mount—post type

Dual Post Utility Mount—P972D01

Figure 5-55. Dual Post Utility Mount—P972D01

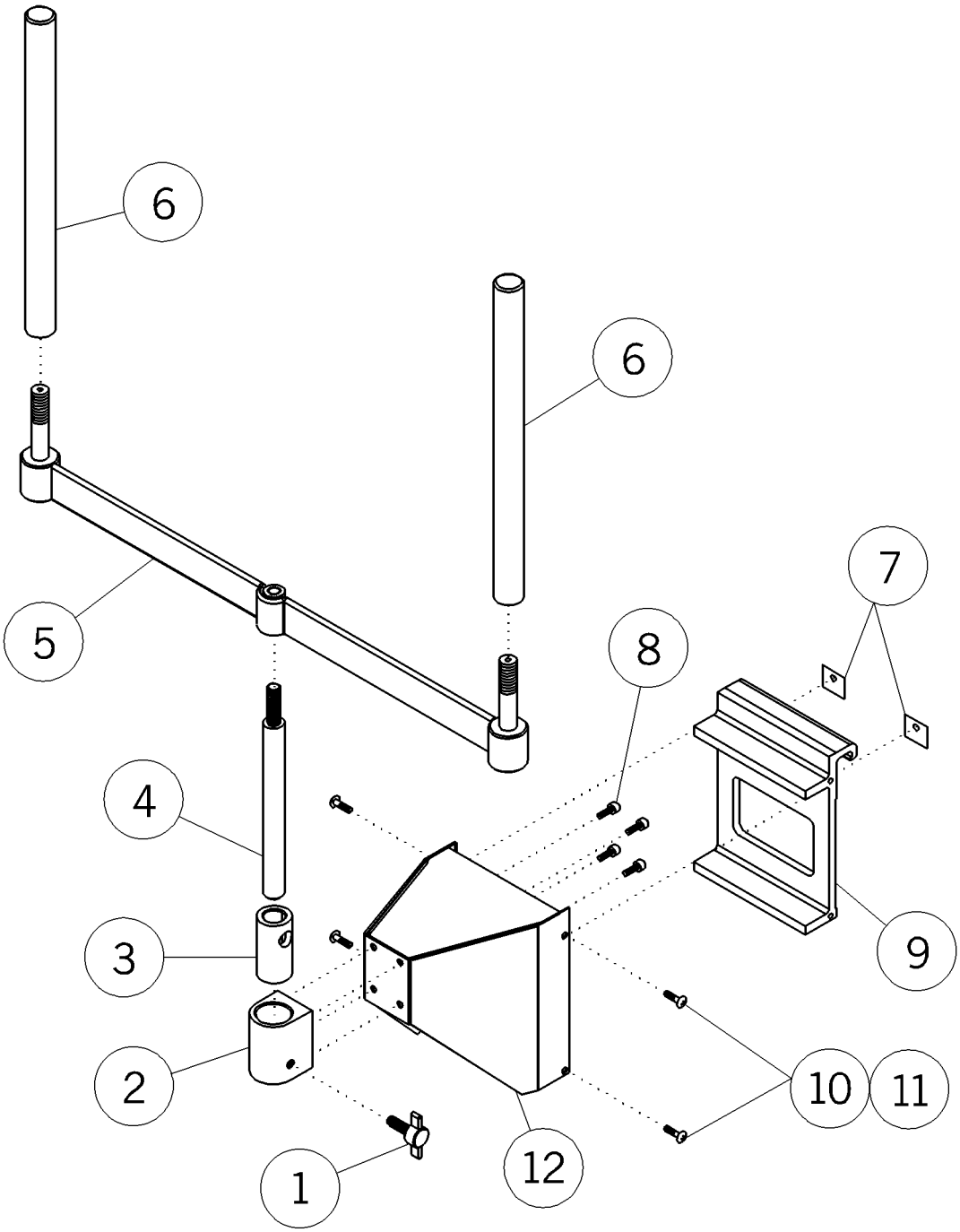

m238_071

Table 5-54. Dual Post Utility Mount—P972D01

Item Number	Part Number	Quantity	Description
1	53913 (1001)	1	Knob assembly
2	55969 (1001)	1	IV block
3	55949 (1001)	1	Adapter
4	53549 (1001)	1	Pivot post
5	57880pl (1001)	1	Post mount assembly
6	53550 (1001)	2	Tube mount—aluminum
7	52793 (1001)	2	Skid pad
8	51012 (1001)	2	Screw
9	53101 (1001)	1	Mount bracket
10	54610-01 (1001)	4	Screw
11	54610-01 (1001)	4	Screw
12	5309839 (1001)	1	Bracket assembly

ISS Support Arm—P976H01 and Transfer Pole—P158

Figure 5-56. ISS Support Arm—P976H01 and Transfer Pole—P158

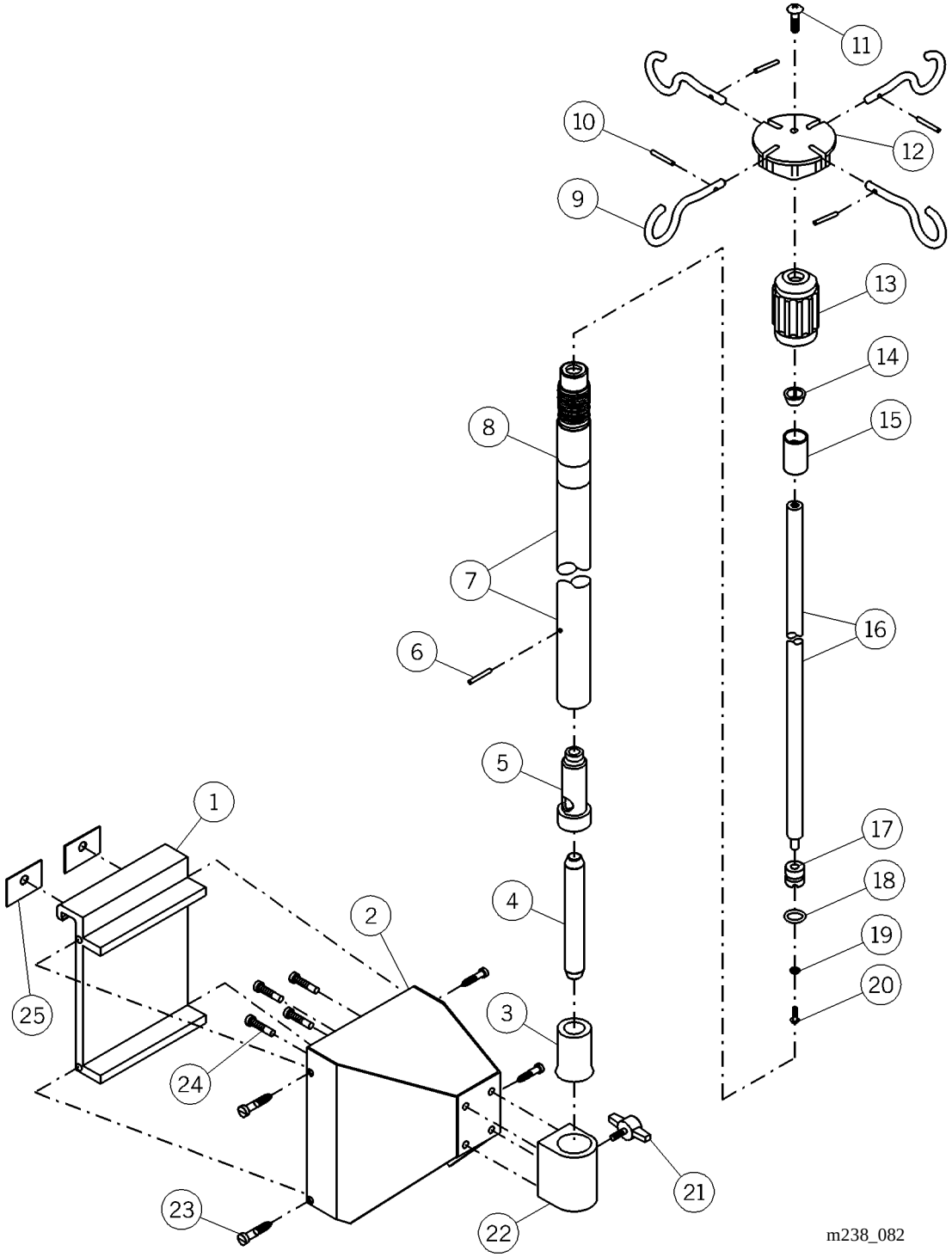

Table 5-55. ISS Support Arm—P976H01 and Transfer Pole—P158

Item Number	Part Number	Quantity	Description
1	53101 (1001)	1	Pump mount bracket
2	5309839 (1001)	1	Bracket assembly
3	55949 (1001)	1	Adapter
4	35005 (1001)	1	Locator
5	35022 (1001)	1	Inner insulator
6	35334 (1001)	2	Spring pin
7	35021 (1001)	1	Transfer pole
8	35044 (1001)	1	Label
9	35003 (1001)	4	IV hook
10	35018 (1001)	4	Roll pin
11	17290 (1001)	1	Mounting screw
12	35001 (1001)	1	Hub
13	35002 (1001)	1	Collet
14	35007 (1001)	1	Ferrule
15	35004 (1001)	1	Insert
16	35026 (1001)	1	Telescoping tube
17	35020 (1001)	1	End cap
18	35019 (1001)	1	O-ring
19	864 (1001)	1	Washer
20	17232 (1001)	1	Screw
21	53913 (1001)	1	Knob assembly
22	55969 (1001)	1	IV block, modified
23	54610-01 (1001)	4	Screw
24	51012 (1001)	4	Screw
25	52793 (1001)	2	Skid pad

IV Hanger—P971H00

Figure 5-57. IV Hanger—P971H00

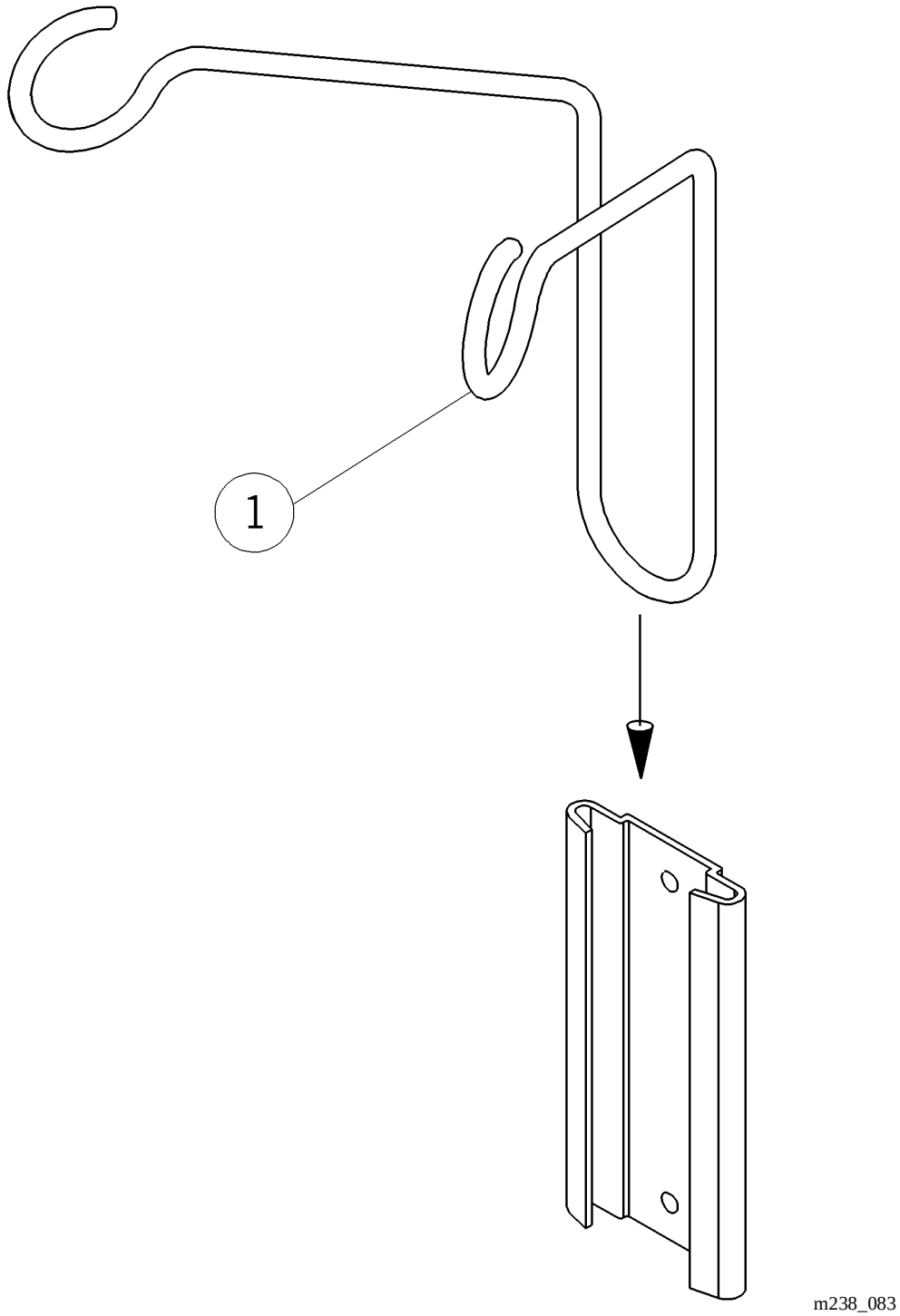

Table 5-56. IV Hanger—P971H00

Item Number	Part Number	Quantity	Description
1	53128 (1001)	1	IV mount
2	50561 (1001)	1	Bracket
3	50891-03 (1001)	2	Screw

Universal Holder

Figure 5-58. Universal Holder

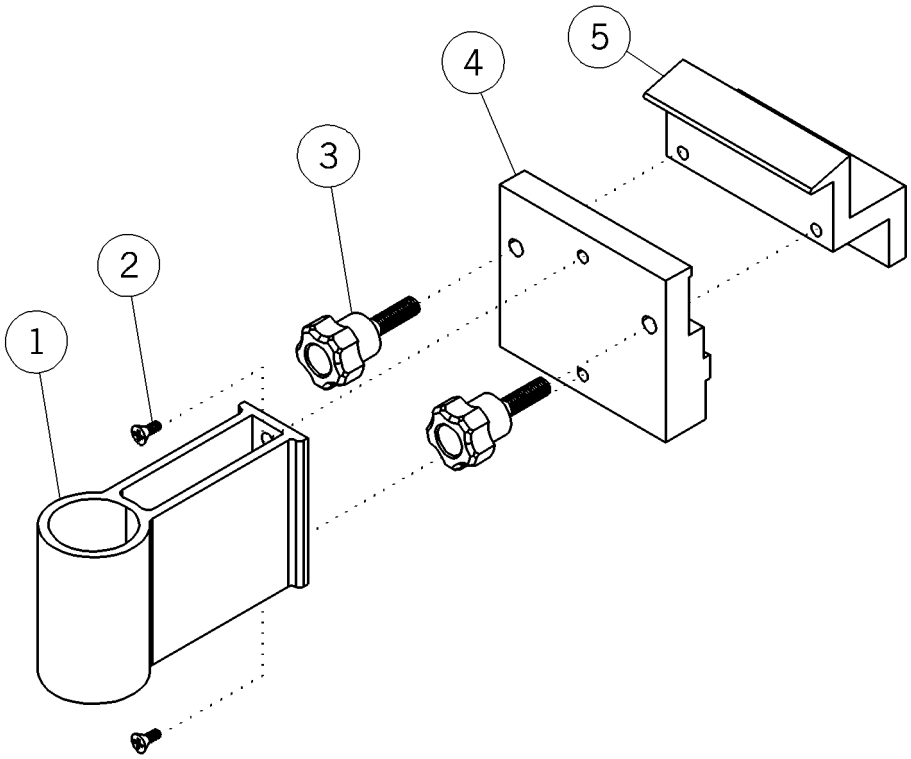

m238_084

Table 5-57. Universal Holder

Item Number	Part Number	Quantity	Description
1	52570 (1001)	1	Holder
2	34099 (1001)	2	Screw
3	52569 (1001)	2	Knob
4	52571 (1001)	1	Trough clamp—front
5	52572 (1001)	1	Trough clamp—rear

Chart Holder—P102102

Figure 5-59. Chart Holder—P102102

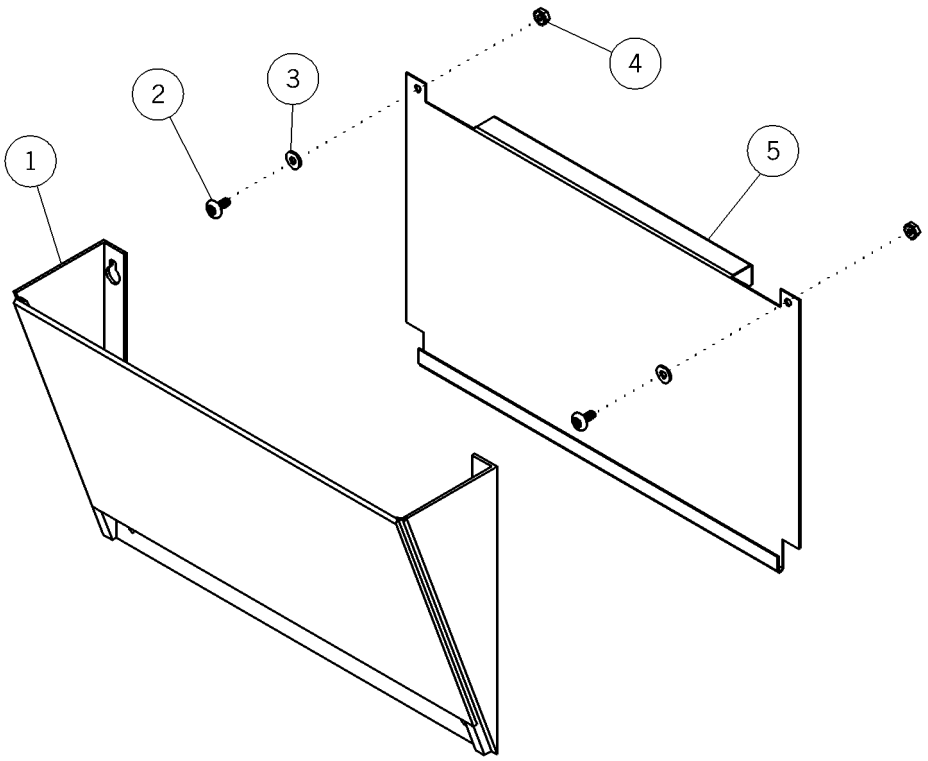

m238_085

Table 5-58. Chart Holder—P102102

Item Number	Part Number	Quantity	Description
1	51920 (1001)	1	Filing pocket
2	17017 (1001)	2	Screw
3	143 (1001)	2	Washer
4	15250 (1001)	2	Locknut washer base
5	55937-39 (1001)	1	Back

Waste Receptacle Assembly—P1017

Figure 5-60. Waste Receptacle Assembly—P1017

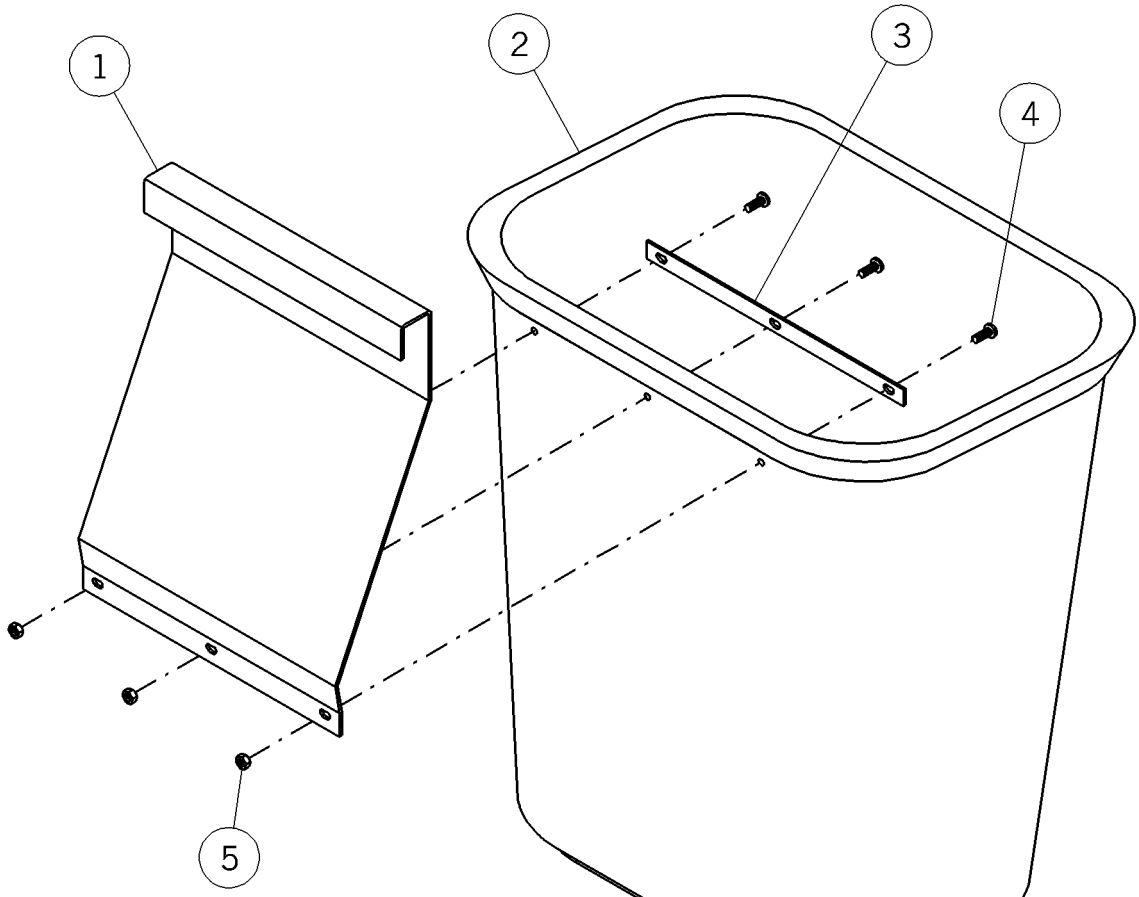

m238_086

Table 5-59. Waste Receptacle Assembly—P1017

Item Number	Part Number	Quantity	Description
1	59373 (1001)	1	Hanger bracket
2	57325 (1001)	1	Waste receptacle
3	57329 (1001)	1	Strap
4	50891-04 (1001)	3	Screw
5	309 (1001)	3	Nut

Mobile Storage Cabinet—P101203B

Figure 5-61. Mobile Storage Cabinet—P101203B

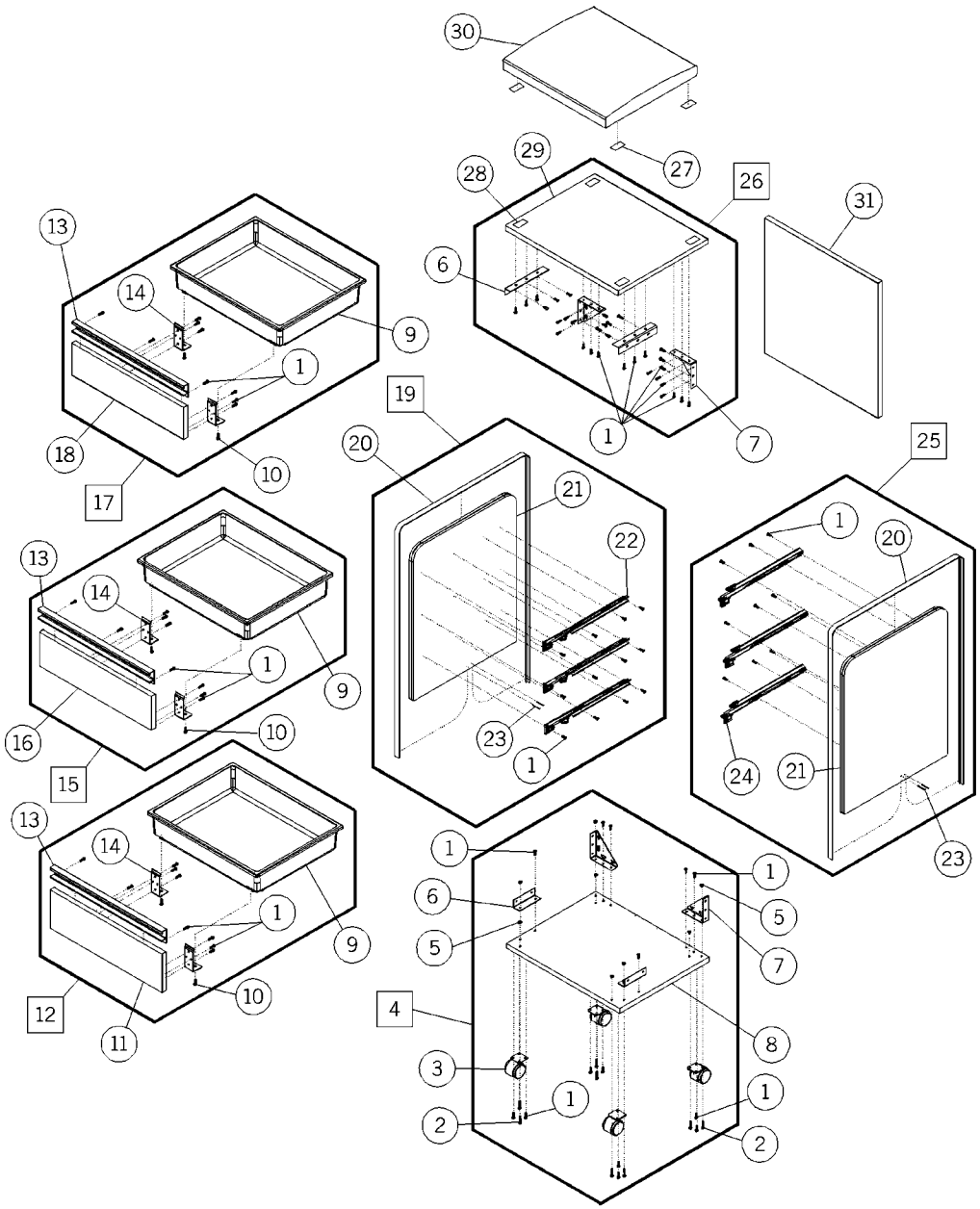

m238_087

Table 5-60. Mobile Storage Cabinet—P101203B

Item Number	Part Number	Quantity	Description
1	50854-03 (1001)	73	Screw
2	21230 (1001)	8	Screw
3	53354 (1001)	4	Caster
4	57415 (1001)*	1	Bottom panel assembly
5	15250 (1001)	8	Locknut washer base
6	5222339 (1001)	4	Corner bracket
7	5044939(1001)	4	Corner bracket
8	57411 (1001)*	1	Bottom panel
9	13296s (1001)	3	Plastic drawer
10	58616 (1001)	6	Screw
11	5333103 (1001)*	1	Drawer front
12	57418 (1001)*	1	Drawer assembly
13	57158 (1001)	3	Pull, light neutral
14	53347-39 (1001)	6	Drawer mounting bracket
15	57416 (1001)*	1	Drawer assembly
16	5333102 (1001)*	1	Drawer front
17	57414 (1001)*	1	Drawer assembly
18	5333101 (1001)*	1	Drawer front
19	57413 (1001)*	1	End panel assembly, lh
20	54794 (1001)	2	T-molding
21	56450 (1001)*	2	End panel, lh
22	12577 (1001)	3	Drawer guide, lh
23	27246 (1001)	4	Power pin
24	12576 (1001)	3	Drawer guide, rh
25	57412 (1001)*	1	End panel assembly, rh
26	57417 (1001)*	1	Top panel assembly
27	53384 (1001)	4	Hook fastener
28	53383 (1001)	4	Loop arm fastener
29	53334 (1001)*	1	Top panel
30	57420 (1001)	1	Cushion
31	53333 (1001)*	1	Back panel

* Specify high pressure laminate color.

Storage Basket, Small—P1029S2 and Large—P1029L2

Figure 5-62. Storage Basket, Small—P1029S2 and Large—P1029L2

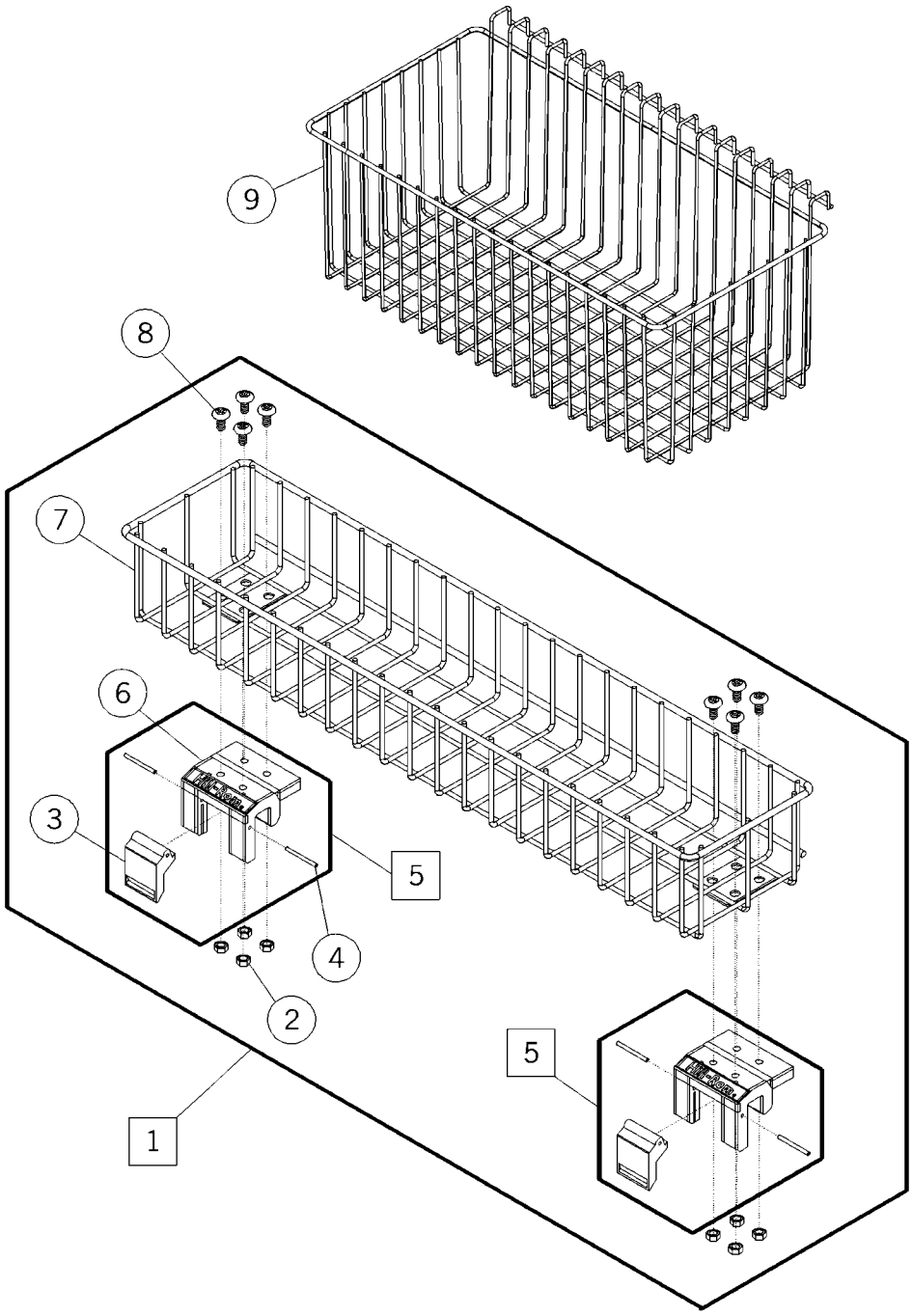

m238_088

Table 5-61. Storage Basket, Small—P1029S2 and Large—P1029L2

Item Number	Part Number	Quantity	Description
1	1029S2 (1001)	1	Small storage basket
2	56400 (1001)	8	Nut, shakeproof
3	54621 (1001)	2	Latch
4	52457 (1001)	4	Roll pin
5	54885 (1001)	2	Accessory mount assembly
6	54880 (1001)	2	Accessory mount
7	56921 (1001)	1	Basket, small
8	54105 (1001)	8	Pivot screw
9	P1029L2 (1001)	1	Large storage basket

Utility Shelf—P101402

Figure 5-63. Utility Shelf—P101402

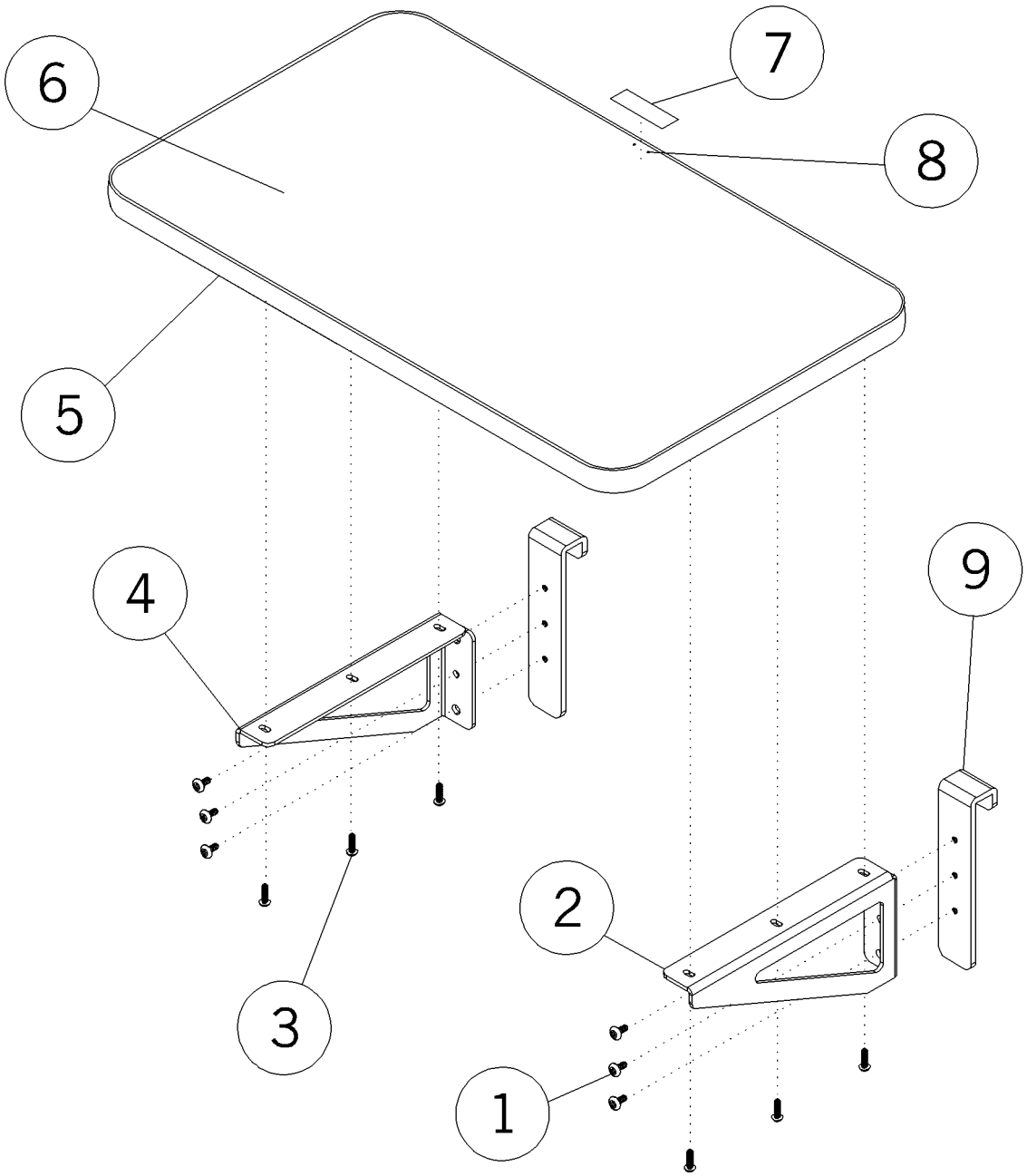

m238_089

Table 5-62. Utility Shelf—P101402

Item Number	Part Number	Quantity	Description
1	54610-01 (1001)	6	Screw
2	52482-01 (1001)	1	Shelf mount—right-hand
3	50854-03 (1001)	6	Screw
4	52482-02 (1001)	1	Shelf mount—left-hand
5	54524-02 (1001)	1	Trim, shelf—light neutral
6	5317920 (1001)*	1	Shelf, top
7	54607 (1001)	1	Label, load
8	27246 (1001)	2	Power pin
9	52563 (1001)	2	Shelf hanger

* Specify high pressure laminate color.

Arm Light Mount—P100801

Figure 5-64. Arm Light Mount—P100801

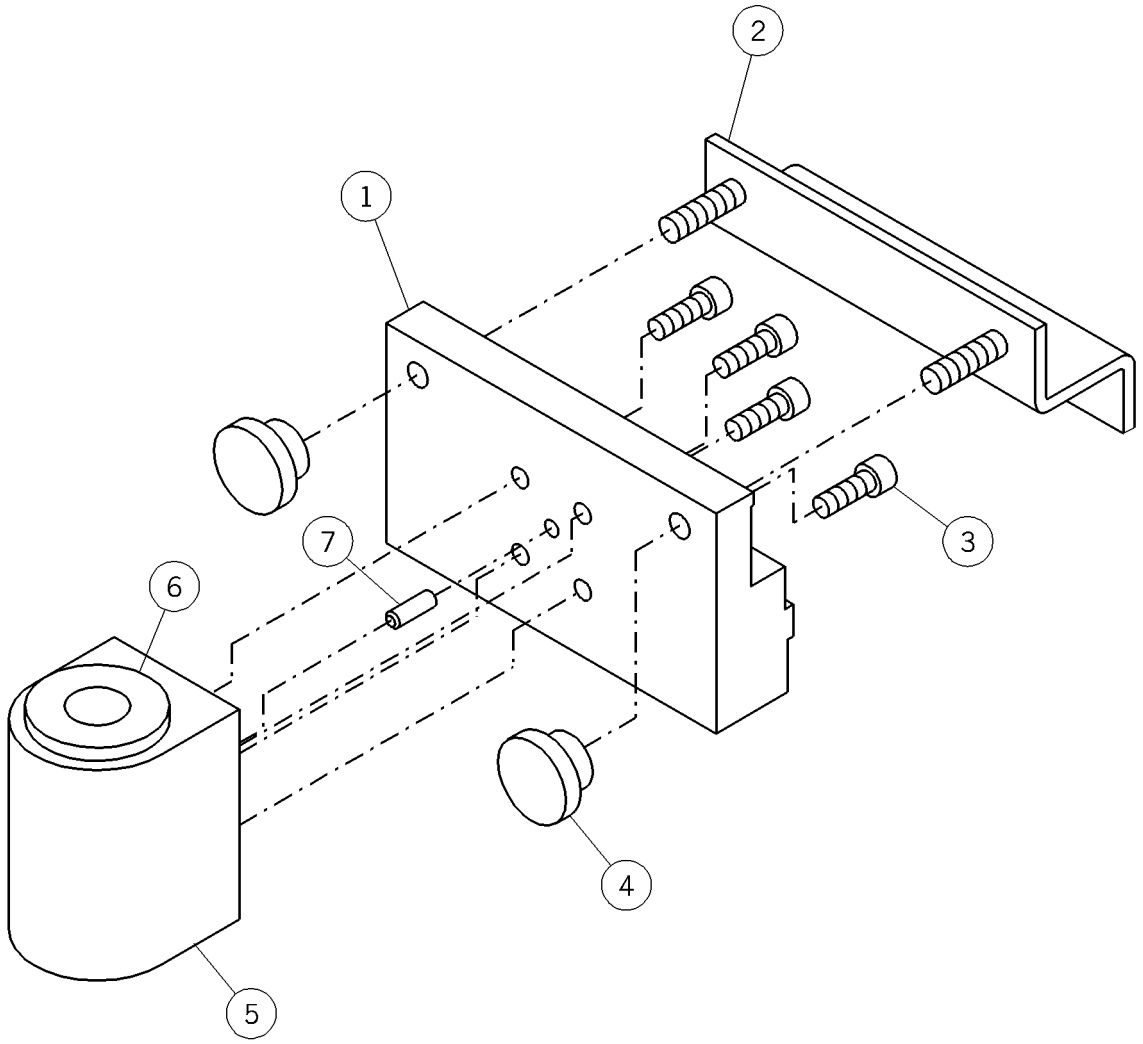

m238_090

Table 5-63. Arm Light Mount—P100801

Item Number	Part Number	Quantity	Description
1	59511 (1001)	1	Face clamp
2	59512 (1001)	1	Clamp assembly
3	51012 (1001)	4	Screw
4	59504 (1001)	2	Knob
5	56787 (1001)	1	IV block, drilled
6	52301 (1001)	1	Adapter
7	54185-01 (1001)	1	Roll pin

Arm Lamp, Incandescent—P963C01 and Incandescent/Fluorescent—P963C02

Figure 5-65. Arm Lamp, Incandescent—P963C01 and Incandescent/Fluorescent—P963C02

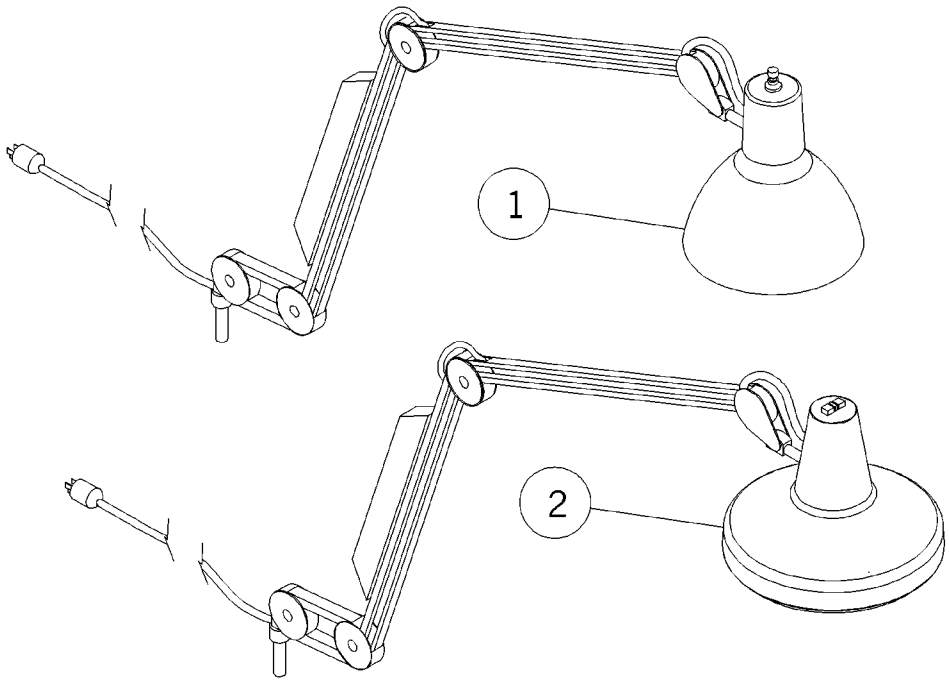

m238_091

Table 5-64. Arm Lamp, Incandescent—P963C01 and Incandescent/Fluorescent—P963C02

Item Number	Part Number	Quantity	Description
1	55924 (1001)	1	Arm lamp, incandescent, 100 watt maximum
2	55925 (1001)	1	Arm lamp, incandescent/fluorescent

Exam Plus® Mount—P100901

Figure 5-66. Exam Plus® Mount—P100901

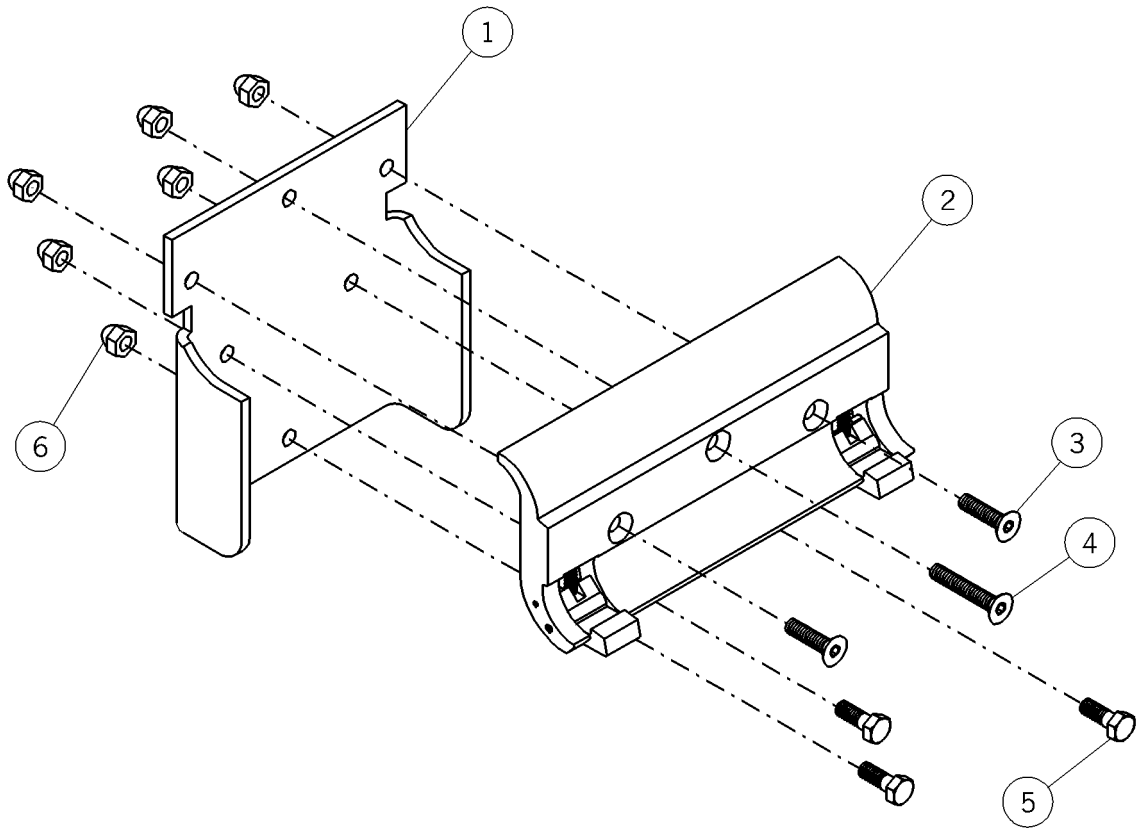

m238_092

Table 5-65. Exam Plus® Mount—P100901

Item Number	Part Number	Quantity	Description
1	59338 (1001)	1	ExamPlus® bracket
2	59340 (1001)	1	ExamPlus® mount assembly
3	5934101 (1001)	2	Screw
4	5934102 (1001)	1	Screw
5	5085305 (1001)	3	Hex bolt
6	59347 (1001)	6	Acorn nut, low crown

Exam Plus® Light—P965-01

Figure 5-67. Exam Plus® Light—P965-01

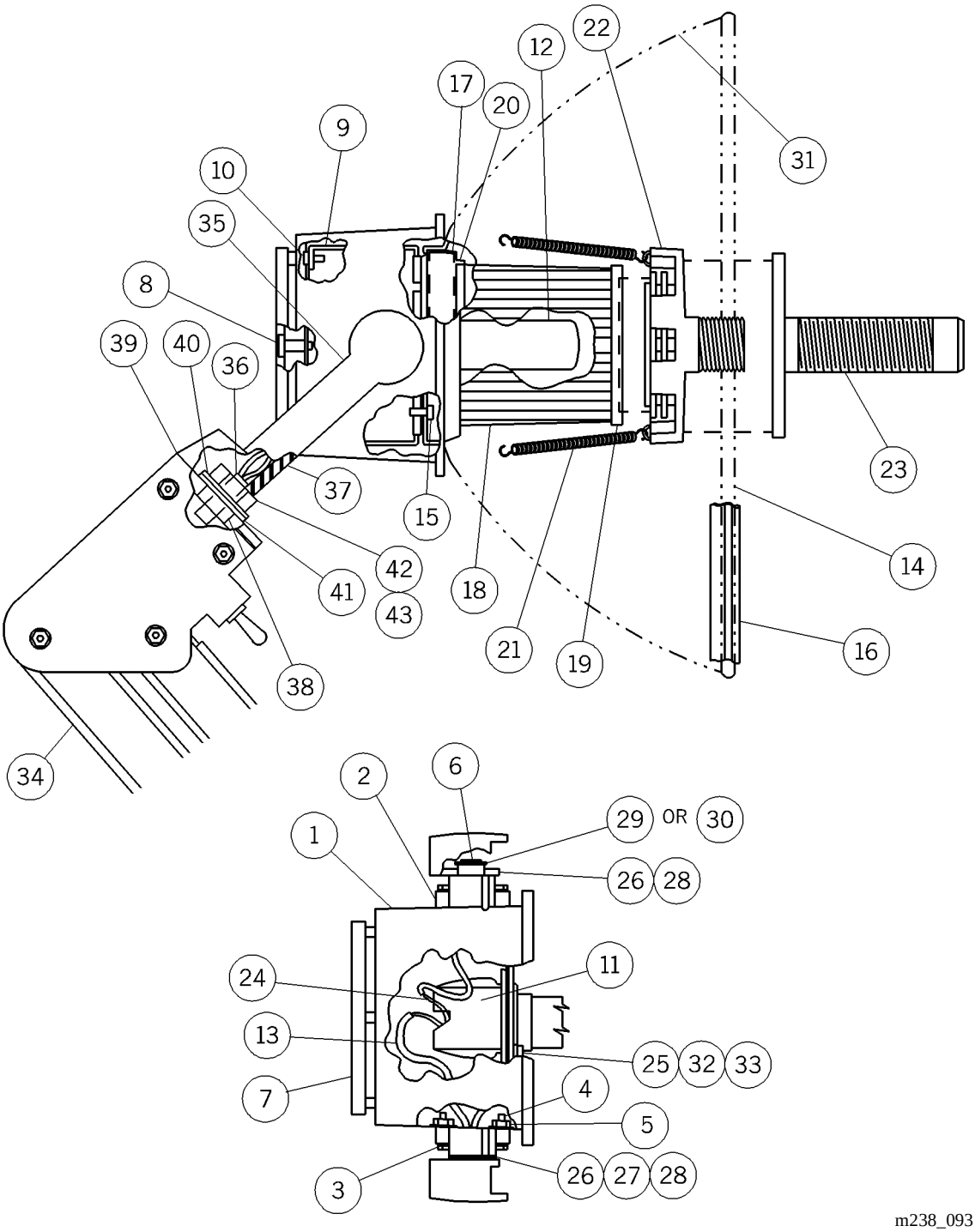

Table 5-66. Exam Plus® Light—P965-01

Item Number	Part Number	Quantity	Description
1	SA7493 (1001)	1	Back cap
2	SA7494 (1001)	2	Ear
3	SA7495 (1001)	2	Screw
4	SA7496 (1001)	2	Screw
5	SA7497 (1001)	4	Nut
6	SA7498 (1001)	2	Retainer pin
7	SA4548 (1001)	1	Back cap grill
8	SA7499 (1001)	4	Screw
9	SA8500 (1001)	1	Socket mount
10	SA8501 (1001)	4	Screw
11	SA4087 (1001)	1	Lamp socket
12	SA4036 (1001)	1	Tungsten-halogen bulb
13	SA8502 (1001)	2	Sleeve
14	SA3707 (1001)	1	Reflector
15	9423 (1001)	4	Screw
16	SA8503 (1001)	1	Extrusion
17	SA4658 (1001)	1	Metal riser
18	SA4186 (1001)	1	Glass tube
19	SA4248 (1001)	1	Plate
20	SA3744 (1001)	1	Gasket
21	SA3706 (1001)	3	Spring
22	SA4249 (1001)	1	Handle mount
23	SA3743 (1001)	1	Handle
24	SA8504 (1001)	2	Spay connector
25	SA8505 (1001)	1	Ground clip
26	SA8506 (1001)	4	Washer
27	SA8507 (1001)	1	Washer
28	SA8508 (1001)	2	Washer
29	SA8509 (1001)	1	Retainer clip
30	SA8510 (1001)	1	Retainer clip
31	SA8511 (1001)	1	Reflector label

Item Number	Part Number	Quantity	Description
32	SA8521 (1001)	1	Screw
33	SA8522 (1001)	1	Lockwasher
34	SA4289 (1001)	1	Upper light arm extrusion
35	SA4572 (1001)	1	Yoke
36	SA8512 (1001)	1	Wire insulation
37	SA8513 (1001)	1	Foam gasket
38	SA8514 (1001)	1	Bushing
39	SA8515 (1001)	1	Washer
40	SA8516 (1001)	1	Washer
41	SA8517 (1001)	1	Washer
42	SA8518 (1001)	1	Nut
43	SA8519 (1001)	As required	Loctite #290
44	SA8520 (1001)	1	Strain relief (not shown)

NOTES:

Utility Light—P102702

Figure 5-68. Utility Light—P102702

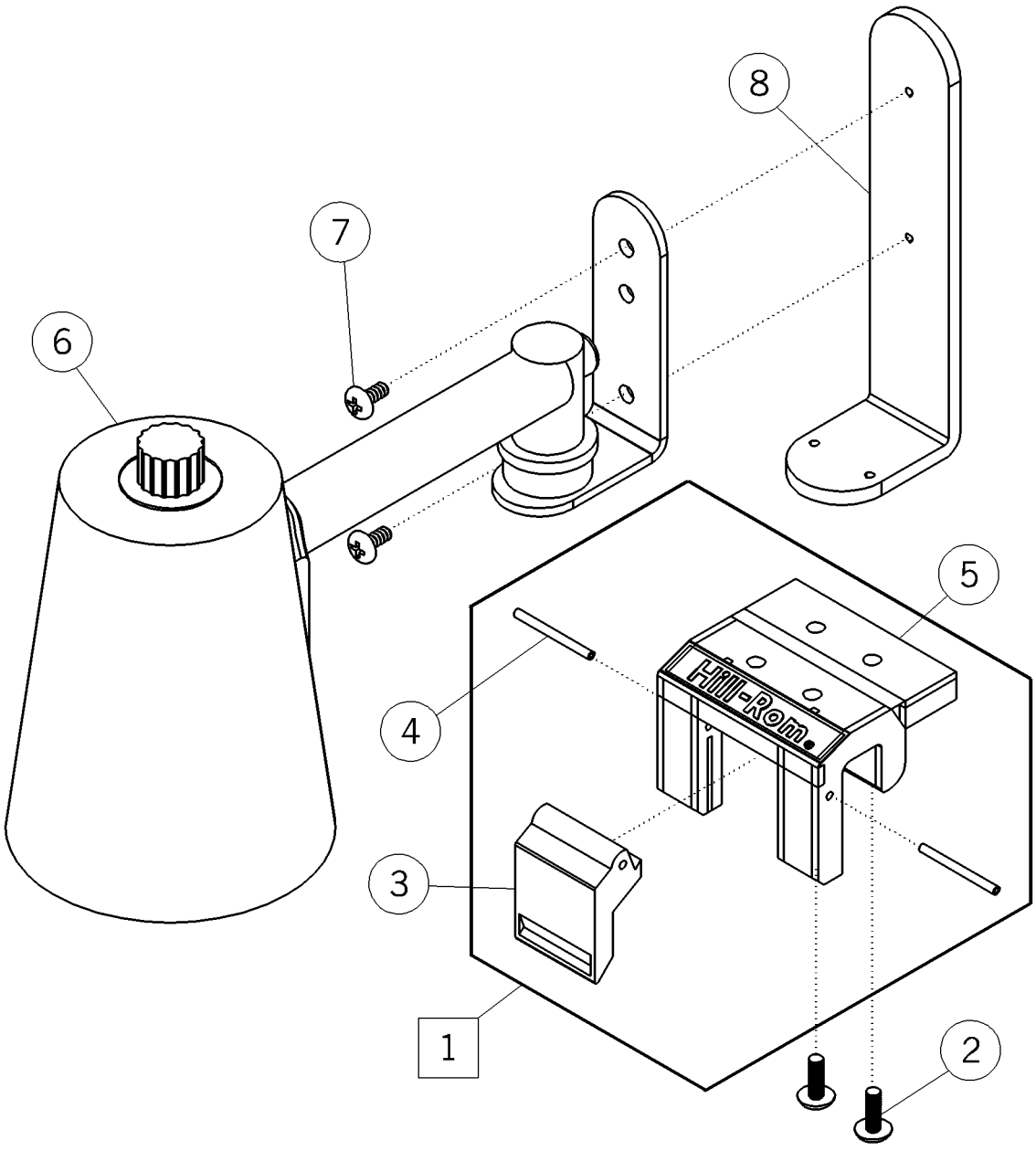

m238_094

Table 5-67. Utility Light—P102702

Item Number	Part Number	Quantity	Description
1	54885 (1001)	1	Accessory mount assembly
2	15338 (1001)	2	Screw
3	54621 (1001)	1	Latch
4	52457 (1001)	2	Roll pin
5	54886 (1001)	1	Accessory mount assembly
6	966A00 (1001)	1	Track light
7	54610-01 (1001)	2	Screw
8	5649439 (1001)	1	Bracket, utility light

Gas Outlet—Ohio

Figure 5-69. Gas Outlet—Ohio

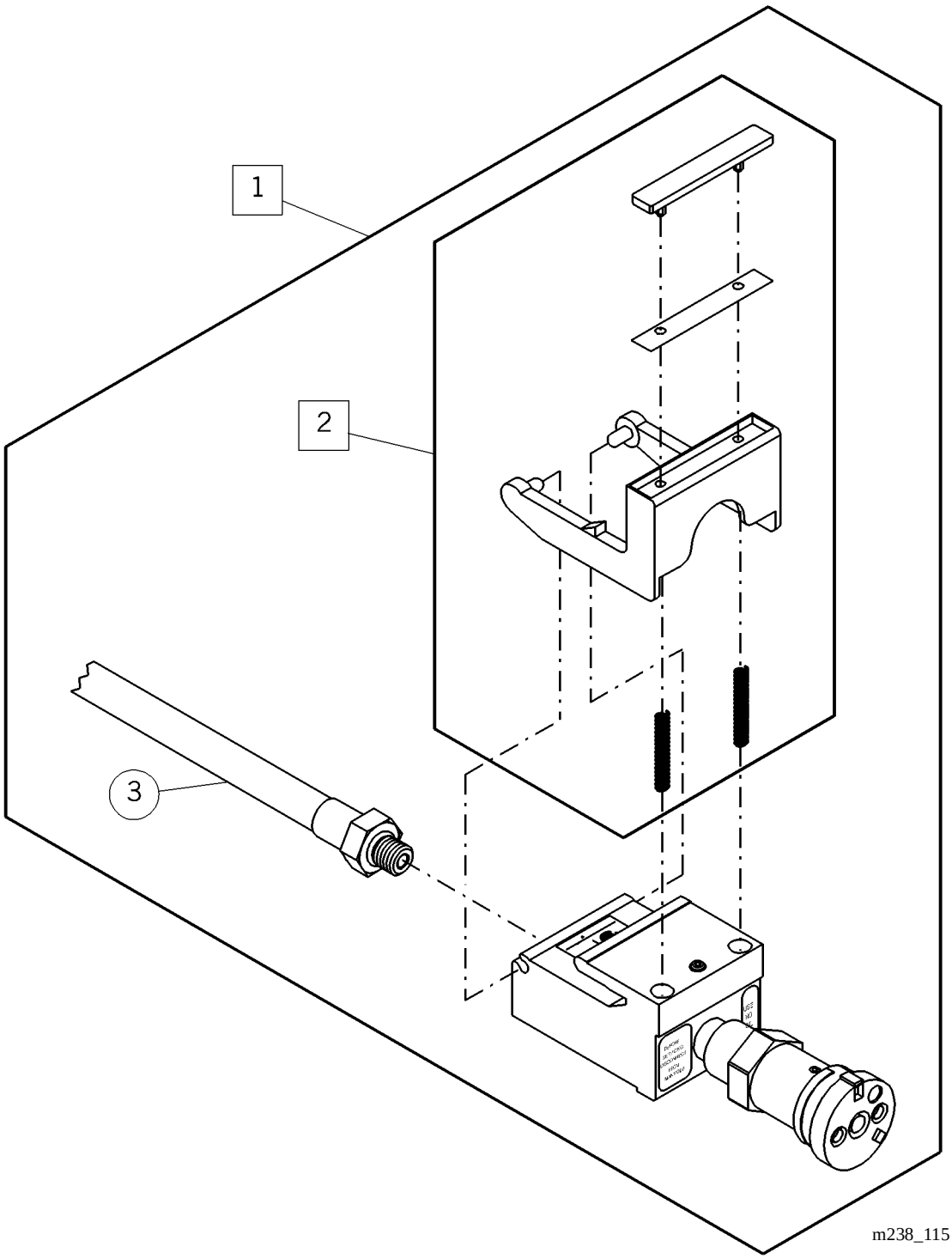

Table 5-68. Gas Outlet—Ohio

Item Number	Part Number	Quantity	Description
1	P1045AOO (1001) or P1045AOV (1001) or P1045AOA (1001) or P1045AON (1001)	1 1 1 1	Gas outlet—Ohio, oxygen Gas outlet—Ohio, vacuum Gas outlet—Ohio, air Gas outlet—Ohio, nitrous oxide
2	91W876 (1001) or 91W877 (1001) or 91W878 (1001)	1	Release bar assembly—vacuum Release bar assembly—oxygen Release bar assembly—air
3	53158-60 (1001) or 53159-60 (1001) or 53160-60 (1001) or 53378-60 (1001) or 53379-60 (1001) or 53380-60 (1001) or 53381-60 (1001)	1 1 1 1 1 1 1	Hose assembly, air—Canada Hose assembly, oxygen—Canada Hose assembly, vacuum—Canada Hose assembly, air Hose assembly, oxygen Hose assembly, vacuum Hose assembly, nitrous oxide

Gas Outlet—Chemetron™

Figure 5-70. Gas Outlet—Chemetron™

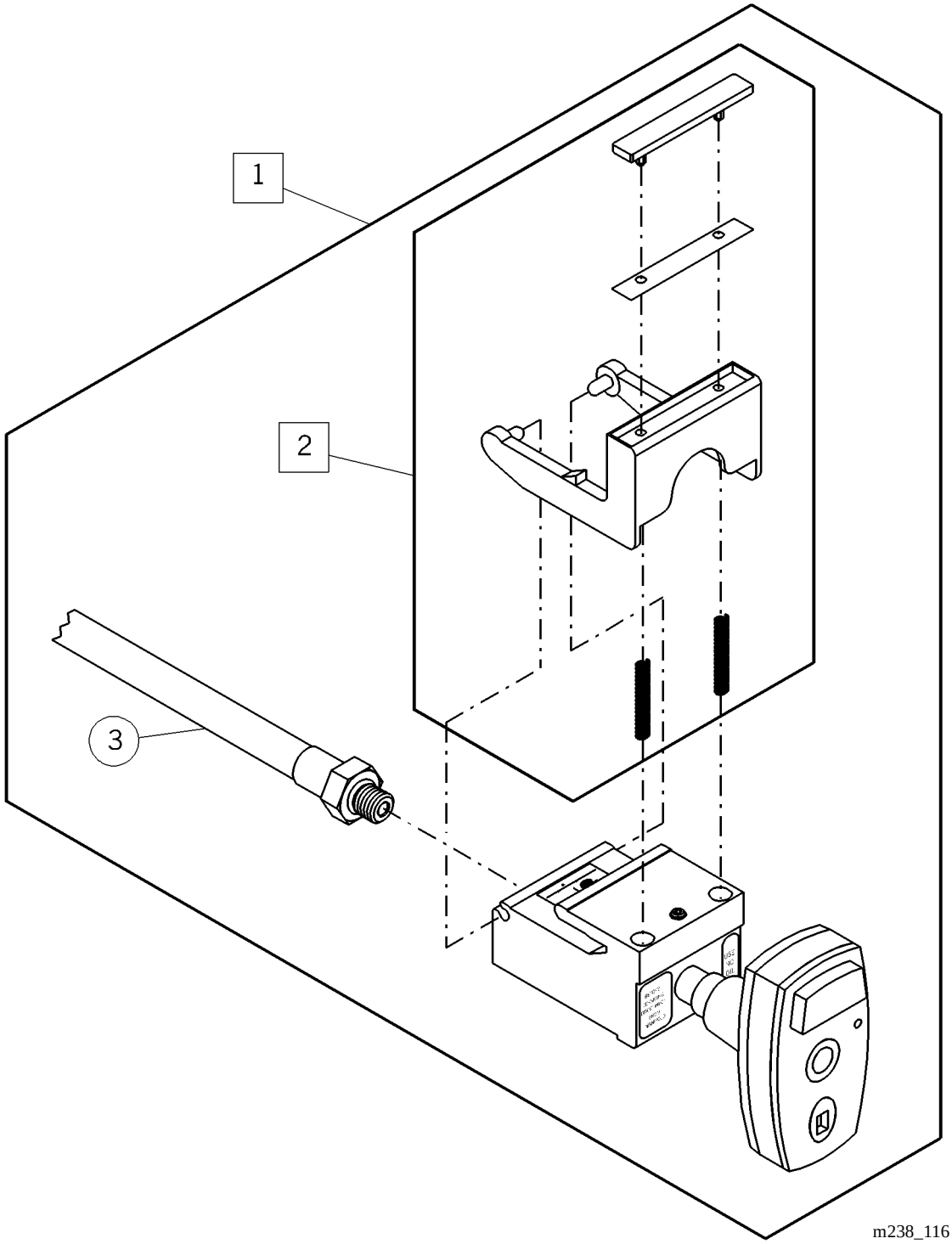

Table 5-69. Gas Outlet—Chemetron™

Item Number	Part Number	Quantity	Description
1	P1045-CO (1001) or P1045-CV (1001) or P1045-CA (1001) or P1045-CN (1001)	1 1 1 1	Gas outlet—Chemetron™, oxygen Gas outlet—Chemetron™, vacuum Gas outlet—Chemetron™, air Gas outlet—Chemetron™, nitrous oxide
2	91W876 (1001) or 91W877 (1001) or 91W878 (1001)	1	Release bar assembly—vacuum Release bar assembly—oxygen Release bar assembly—air
3	53158-60 (1001) or 53159-60 (1001) or 53160-60 (1001) or 53378-60 (1001) or 53379-60 (1001) or 53380-60 (1001) or 53381-60 (1001)	1 1 1 1 1 1 1	Hose assembly, air—Canada Hose assembly, oxygen—Canada Hose assembly, vacuum—Canada Hose assembly, air Hose assembly, oxygen Hose assembly, vacuum Hose assembly, nitrous oxide

Gas Outlet—Puritan-Bennet™

Figure 5-71. Gas Outlet—Puritan-Bennet™

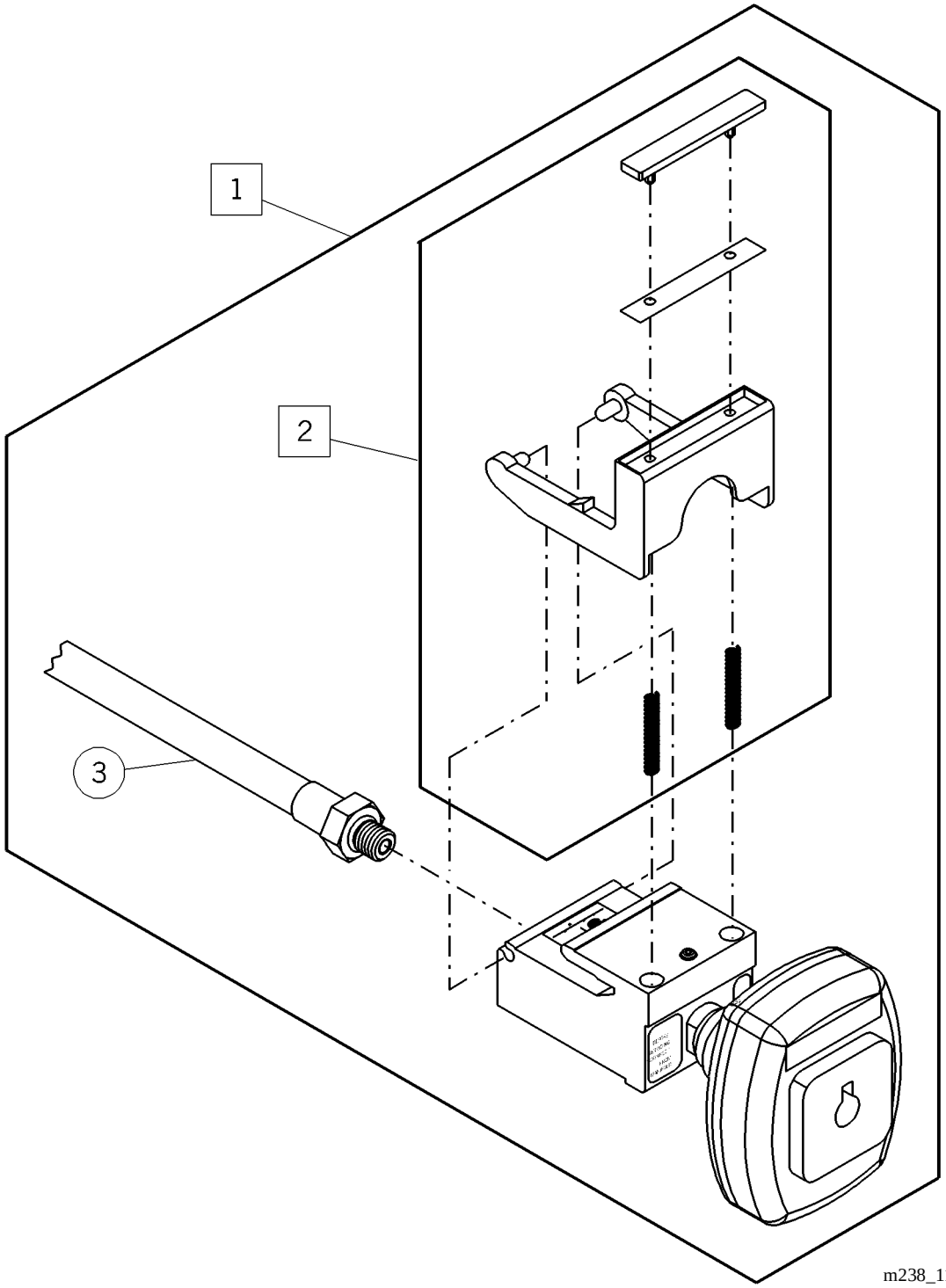

Table 5-70. Gas Outlet—Puritan-Bennet™

Item Number	Part Number	Quantity	Description
1	P1045-PO (1001) or P1045-PV (1001) or P1045-PA (1001) or P1045-PN (1001)	1 1 1 1	Gas outlet—Puritan-Bennet™, oxygen Gas outlet—Puritan-Bennet™, vacuum Gas outlet—Puritan-Bennet™, air Gas outlet—Puritan-Bennet™, nitrous oxide
2	91W876 (1001) or 91W877 (1001) or 91W878 (1001)	1	Release bar assembly—vacuum Release bar assembly—oxygen Release bar assembly—air
3	53158-60 (1001) or 53159-60 (1001) or 53160-60 (1001) or 53378-60 (1001) or 53379-60 (1001) or 53380-60 (1001) or 53381-60 (1001)	1 1 1 1 1 1 1	Hose assembly, air—Canada Hose assembly, oxygen—Canada Hose assembly, vacuum—Canada Hose assembly, air Hose assembly, oxygen Hose assembly, vacuum Hose assembly, nitrous oxide

Gas Outlet—Oxequip™

Figure 5-72. Gas Outlet—Oxequip™

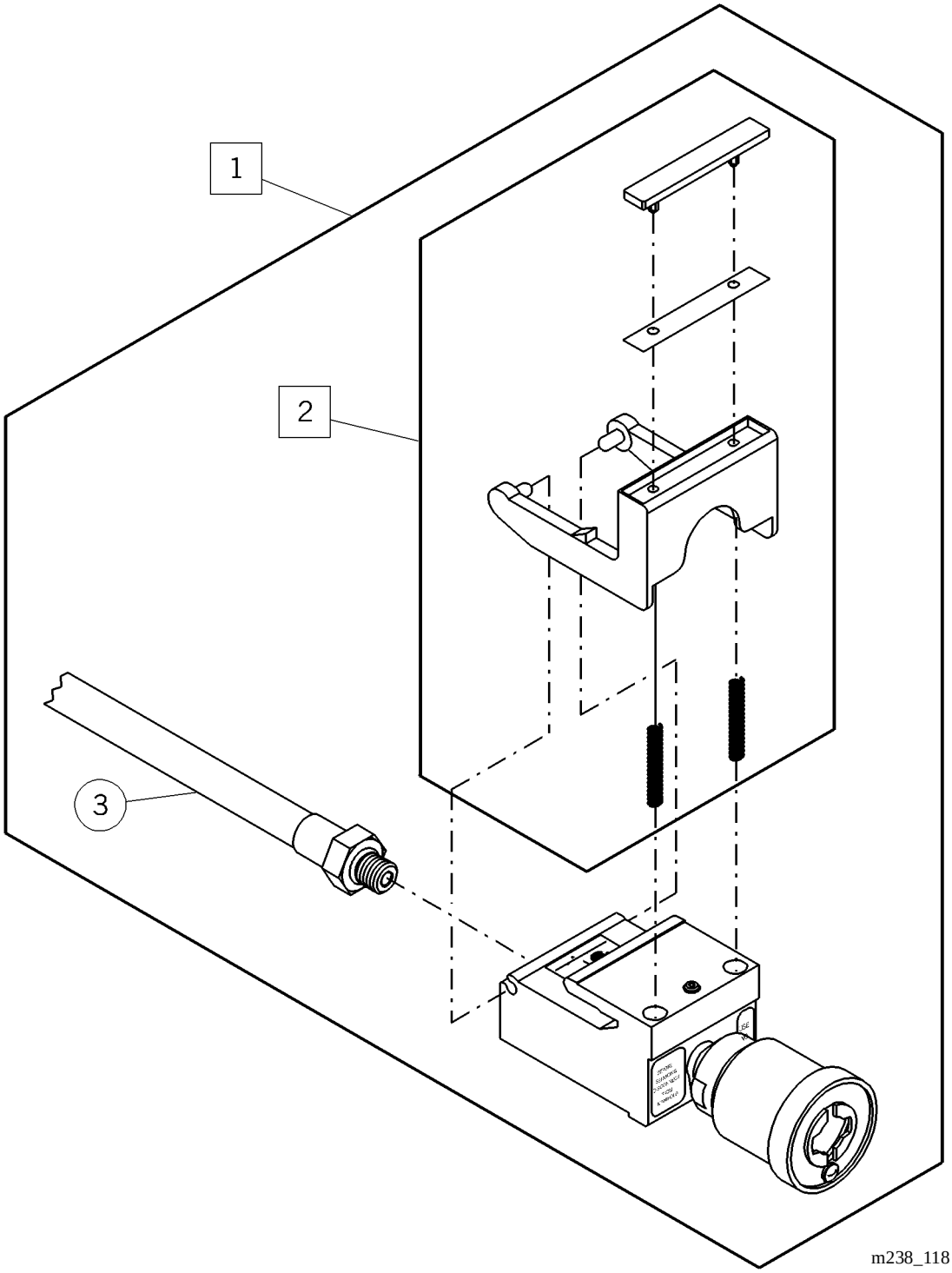

Table 5-71. Gas Outlet—Oxequip™

Item Number	Part Number	Quantity	Description
1	P1045-XO (1001) or P1045-XV (1001) or P1045-XA (1001) or P1045-XN (1001)	1 1 1 1	Gas outlet—Oxequip™, oxygen Gas outlet—Oxequip™, vacuum Gas outlet—Oxequip™, air Gas outlet—Oxequip™, nitrous oxide
2	91W876 (1001) or 91W877 (1001) or 91W878 (1001)	1	Release bar assembly—vacuum Release bar assembly—oxygen Release bar assembly—air
3	53158-60 (1001) or 53159-60 (1001) or 53160-60 (1001) or 53378-60 (1001) or 53379-60 (1001) or 53380-60 (1001) or 53381-60 (1001)	1 1 1 1 1 1 1	Hose assembly, air—Canada Hose assembly, oxygen—Canada Hose assembly, vacuum—Canada Hose assembly, air Hose assembly, oxygen Hose assembly, vacuum Hose assembly, nitrous oxide

Gas Outlet—DISS

Figure 5-73. Gas Outlet—DISS

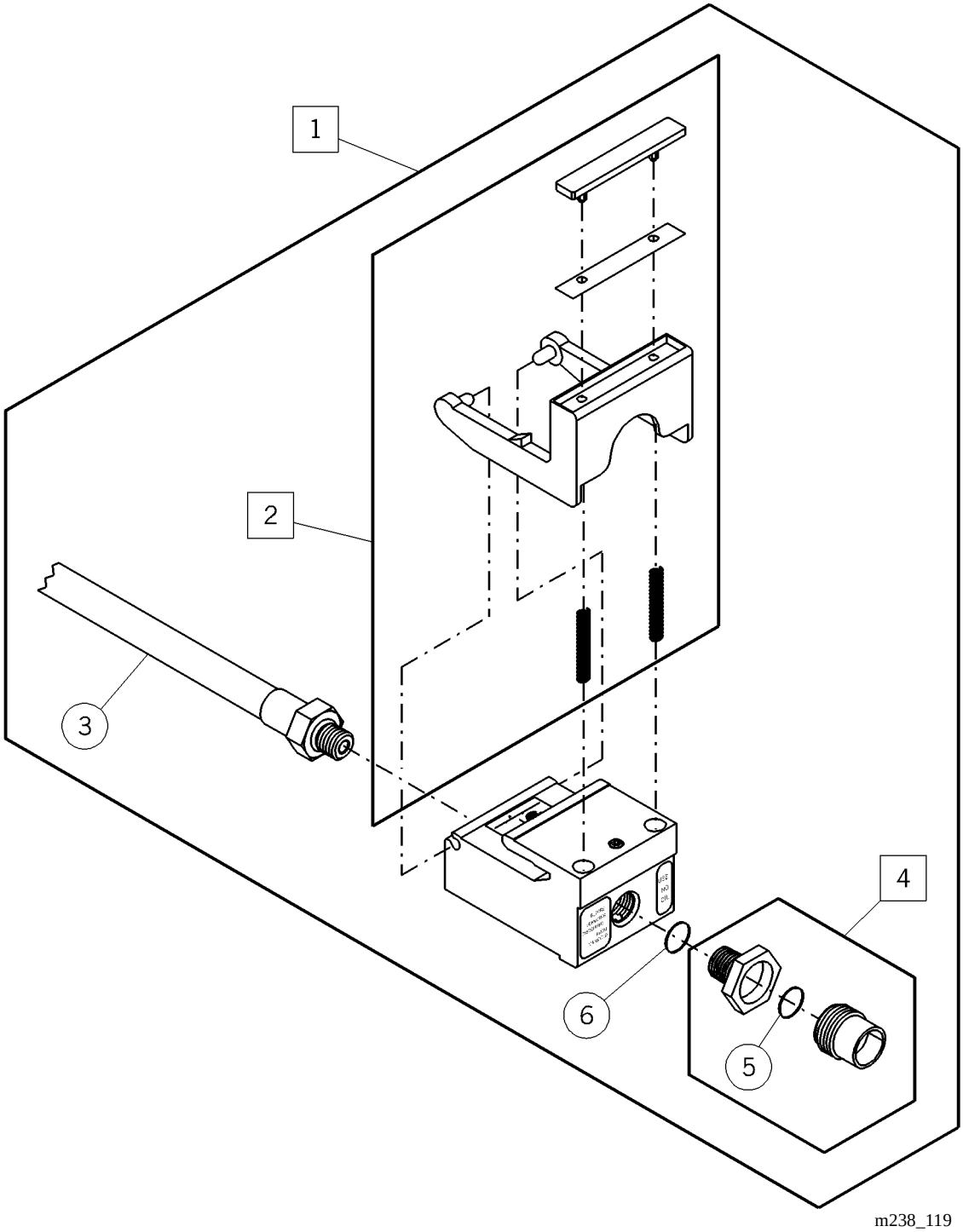

Table 5-72. Gas outlet—DISS

Item Number	Part Number	Quantity	Description
1	P1045-DO (1001) or P1045-DV (1001) or P1045-DA (1001) or P1045-DN (1001)	1 1 1 1	Gas outlet—DISS, oxygen Gas outlet—DISS, vacuum Gas outlet—DISS, air Gas outlet—DISS, nitrous oxide
2	91W876 (1001) or 91W877 (1001) or 91W878 (1001)	1	Release bar assembly—vacuum Release bar assembly—oxygen Release bar assembly—air
3	53158-60 (1001) or 53159-60 (1001) or 53160-60 (1001) or 53378-60 (1001) or 53379-60 (1001) or 53380-60 (1001) or 53381-60 (1001)	1 1 1 1 1 1 1	Hose assembly, air—Canada Hose assembly, oxygen—Canada Hose assembly, vacuum—Canada Hose assembly, air Hose assembly, oxygen Hose assembly, vacuum Hose assembly, nitrous oxide
4	56974 (1001) or 56975 (1001) or 56976 (1001) or 52425 (1001)	1 1 1 1	Fitting, demand valve—air Fitting, demand valve—oxygen Fitting, demand valve—vacuum Fitting, demand valve—nitrous oxide
5	SA4948 (1001)	1	O-ring
6	525955-12 (1001) or 525955-13 (1001)	1 1	O-ring—air and oxygen O-ring—vacuum

NOTES:

Chapter 6
General Procedures

Chapter Contents

Cleaning and Care . . . . . 6 - 3
- General Cleaning . . . . . 6 - 3
- Steam Cleaning . . . . . 6 - 4
- Hard to Clean Spots . . . . . 6 - 4
- Accessories . . . . . 6 - 4
- Disinfection . . . . . 6 - 4

Preventive Maintenance . . . . . 6 - 5
- Preventive Maintenance Schedule . . . . . 6 - 6
- Preventive Maintenance Checklist . . . . . 6 - 7

Tool and Supply Requirements . . . . . 6 - 8

Installation and Post Installation Inspection . . . . . 6 - 8

6

NOTES:

Cleaning and Care

WARNING:
Adhere to the “Infection Control Policies and Procedures” outlined in the *Safety Coordinator Reference Guide*. Failure to do so could result in the spread of infection.

WARNING:
Follow the product manufacturer’s instructions. Failure to do so could result in personal injury or equipment damage.

SHOCK HAZARD:
To minimize the risk of electrical shock or damage to equipment, disconnect all electrical power to the system before working on it. Failure to do so could result in personal injury or equipment damage.

SHOCK HAZARD:
Do not expose the unit to excessive moisture. Personal injury or equipment damage could occur.

CAUTION:
Do not use harsh cleaners, solvents, or detergents. Equipment damage could occur.

General Cleaning

1. Perform the following:
   d. Locate the involved building standard/emergency circuit breaker panel.
   e. Set the involved circuit breaker (A) to OFF (see figure 4-1 on page 4-3).
   f. Lock out and tag out the breaker.
2. Remove applied power to the Neonatal Horizon® Headwall System before cleaning or disinfecting.
3. Clean the Neonatal Horizon® Headwall System with a lightly dampened cloth and ordinary disinfectants. Do not use excessive liquid.

4. After the Neonatal Horizon® Headwall System has been cleaned, remove the lockout and out-of-service tags, and set the circuit breaker (A) to the ON position (see figure 4-1 on page 4-3).

Steam Cleaning

Do not use any steam cleaning device on the Neonatal Horizon® Headwall System. Excessive moisture can damage electrical components in the system.

Hard to Clean Spots

To remove difficult spots or stains, use standard household cleaners and a soft bristle brush. To loosen heavy, dried-on soil or excreta, you may first need to saturate the spot.

Accessories

Remove soiled accessories from the Neonatal Horizon® Headwall System accessory tracks prior to cleaning or disinfecting.

Disinfection

Dilute disinfectants and germicides as specified on the manufacturer's label.

Preventive Maintenance

WARNING:
Only facility-authorized maintenance personnel should perform preventive maintenance on the Neonatal Horizon® Headwall System. Preventive maintenance performed by unauthorized personnel could result in personal injury or equipment damage.

The Neonatal Horizon® Headwall System requires an effective maintenance program. We recommend that you perform annual preventive maintenance (PM) and testing for Joint Commission on Accreditation of Healthcare Organizations (JCAHO). PM and testing not only meet JCAHO requirements but will help ensure a long, operative life for the Neonatal Horizon® Headwall System. PM will minimize downtime due to excessive wear.

The following PM schedule guides the technician through a normal PM procedure on the Neonatal Horizon® Headwall System. During this PM process, check each item on the schedule, and make the necessary adjustments.

Follow the PM schedule with the corresponding PM checklist. This checklist is designed to keep a running maintenance history and subsequent repair costs for one Neonatal Horizon® Headwall System. However, your facility can modify this checklist or design another to fit your needs. Keeping close records and maintaining the Neonatal Horizon® Headwall System and its accessories are two effective ways to reduce downtime and ensure the patient remains comfortable.

Preventive Maintenance Schedule

Table 6-1. Preventive Maintenance Schedule

Function	Procedure
Power cables	Inspect all cables for good condition and possible cracking, cuts, or pinches in insulating coverings.
Circuit breakers	Turn the circuit breaker off and on to check proper function.
Electrical receptacles	Check all receptacles for proper ground conductor extractive force. The extractive force should be 4 oz. (113.4 g) with a 0.184" (4.67 mm) diameter pin.
Electrical connections	Check all electrical connections for tightness, and tighten as needed.
Ceiling support	Inspect the ceiling chase hanger bracket. Compare to the installation drawings provided by the manufacturer.
Gas supply conduit and hoses	Inspect all joints in the Neonatal Horizon® Headwall System for gas leaks. Inspect hoses for cracking, wear, collapse, or leakage.
General appearance	Check cleanliness. See “Cleaning and Care” on page 6-3 if needed.

Preventive Maintenance Checklist

Table 6-2. Preventive Maintenance Checklist

Date																						
																						Function
Hill-Rom, Inc.	Manufacturer																					Power cables
																						Circuit breakers
																						Electrical receptacles
																						Electrical connections
																						Ceiling support
																						Gas supply conduit
																						Gas supply hoses
																						General appearance
	Model Number																					
	Serial Number																					
Total Cost for This Page																						Labor Time:
																						Repair Cost:
																						Inspected By:
																						Legend L=Lube C=Clean A=Adjust R=Repair or Replace O=Okay N=Not Applicable Remarks:

Tool and Supply Requirements

The following tools and supplies are required to service the Neonatal Horizon® Headwall System:

- Screwdriver
- Phillips head screwdriver
- Pliers
- Adjustable wrench
- Voltmeter
- Teflon tape

Installation and Post Installation Inspection

- Complete installation instructions are supplied with every Neonatal Horizon® Headwall System. These instructions take into account the variations in each system as ordered.
- Hill-Rom will supply the hanger bracket consisting of a steel wall plate and ceiling plate. The ceiling plate provides knockouts for building service connections to the vertical chase. Additional structural support bracketing and hardware may be purchased, if required.
- In seismic code areas, contact Hill-Rom for additional information concerning installation.
- The mechanical contractor shall install and provide primary connections to the Neonatal Horizon® Headwall System medical gas manifold as detailed on the drawings. The mechanical contractor will perform and certify all pressure tests as required by NFPA 56F (non-flammable medical gas systems) and any local codes.
- The electrical contractor shall furnish and install conduit to the hanger bracket knockout plate with wiring. The contractor will make the connection of building services to the pre-wired junction box as shown in the electrical drawings in the installation instructions.

- After installation, the electrical contractor shall be responsible for checking the entire system for proper operation.
- Upon request, a Hill-Rom representative may periodically check with the contractor during initial installation and assist the contractor in final check to make certain the installation is in operating condition. The final certification shall be the responsibility of the electrical and mechanical contractors for their portions of the installation.

NOTES:

Chapter 7
Accessories

Chapter Contents

Accessories . . . . . 7 - 3
Monitor Slide . . . . . 7 - 4
Installation . . . . . 7 - 4
Opthalmoscope Mount, Extends Down . . . . . 7 - 6
Installation . . . . . 7 - 6
Opthalmoscope Mount, Extends Up . . . . . 7 - 7
Installation . . . . . 7 - 7
Aneroid Sphygmomanometer and Mount . . . . . 7 - 8
Installation . . . . . 7 - 8
Mercurial Sphygmomanometer and Mount . . . . . 7 - 9
Installation . . . . . 7 - 9
Cuff Basket . . . . . 7 - 10
Installation . . . . . 7 - 10
Bird Blender Mount, Extends Down . . . . . 7 - 11
Installation . . . . . 7 - 11
Bird Blender Mount, Extends Up . . . . . 7 - 12
Installation . . . . . 7 - 12
Bottle Slide and Extended Bottle Slide . . . . . 7 - 13
Installation . . . . . 7 - 13
Cable Organizer . . . . . 7 - 14
Installation . . . . . 7 - 14
Resuscitator Bag Holder . . . . . 7 - 15
Installation . . . . . 7 - 15

STAT Clock/Timer—Pod Mounted . . . . . 7 - 16
Installation . . . . . 7 - 16
Utility Hook . . . . . 7 - 18
Installation . . . . . 7 - 18
Short Post and Dual Post Utility Mount . . . . . 7 - 19
Installation . . . . . 7 - 19
ISS Support Arm and Transfer Pole . . . . . 7 - 21
Installation . . . . . 7 - 21
IV Hanger - for use with Bottle Slide P1020A1 . . . . . 7 - 23
Installation . . . . . 7 - 23
Universal Holder . . . . . 7 - 24
Installation . . . . . 7 - 24
Chart Holder . . . . . 7 - 25
Installation . . . . . 7 - 25
Waste Receptacle Assembly . . . . . 7 - 26
Installation . . . . . 7 - 26
Mobile Storage Cabinet . . . . . 7 - 27
Installation . . . . . 7 - 27
Large and Small Storage Basket . . . . . 7 - 29
Installation . . . . . 7 - 29
Utility Shelf . . . . . 7 - 31
Installation . . . . . 7 - 31
Arm Light Mount . . . . . 7 - 32
Installation . . . . . 7 - 32
Incandescent and Incandescent/Fluorescent Arm Lamp - for use with Arm Light Mount P100801 . . . . . 7 - 33
Installation . . . . . 7 - 33
Exam Plus® Light Mount . . . . . 7 - 34
Installation . . . . . 7 - 34
Utility Light . . . . . 7 - 35
Installation . . . . . 7 - 35

Accessories

See table 7-1 on page 7-3 for the Neonatal Horizon® Headwall System accessories.

Table 7-1. Accessories List

Product Number	Description
P1007N2	Monitor Slide
P1020S1, P1020S2	Opthalmoscope Mount, extends down
P1020S4	Opthalmoscope Mount, extends up
P978-01, P102503	Aneroid Sphygmomanometer and Mount
P977-01, P102402	Mercurial Sphygmomanometer and Mount
P102802	Cuff Basket
P1020B1	Bird Blender Mount, extends down
P1020NB1	Bird Blender Mount, extends up
P1020A1, P1020N1	Bottle Slide and Extended Bottle Slide
P103602	Cable Organizer
P102202	Resuscitator Bag Holder
P101811	STAT Clock—Pod Mounted
P102602	Utility Hook
P972N01, P972D01	Short Post and Dual Post Utility Mount
P976H01, P158	ISS Support Arm and Transfer Pole
P971H00	IV Hanger
P102302	Universal Holder
P102102	Chart Holder
P101702	Waste Receptacle Assembly
P101203B	Mobile Storage Cart
P1029L2, P1029S2	Large and Small Storage Basket
P101402	Utility Shelf
P100801	Arm Light Mount
P963C01, P963C02	Incandescent and Incandescent/Fluorescent Arm Lamp
P100901	Exam Plus® Mount
P102702	Utility Light

7.1 Monitor Slide

Tools required: Phillips head screwdriver
Adjustable wrench

Installation

1. Install the channel assembly (A), screws (B), and washers (C) on the monitor track (D) (see figure 7-1 on page 7-5).

2. Install the front trough clamp (E) and screws (F) on the monitor track (D).

3. Install the rear trough clamp (G) and hex bolts (H) on the front trough clamp (E).

4. Install the clamp clamps (G and E) over the lip of the Neonatal Horizon® Headwall System raceway, and tighten hex bolts (H).

Figure 7-1. Monitor Slide

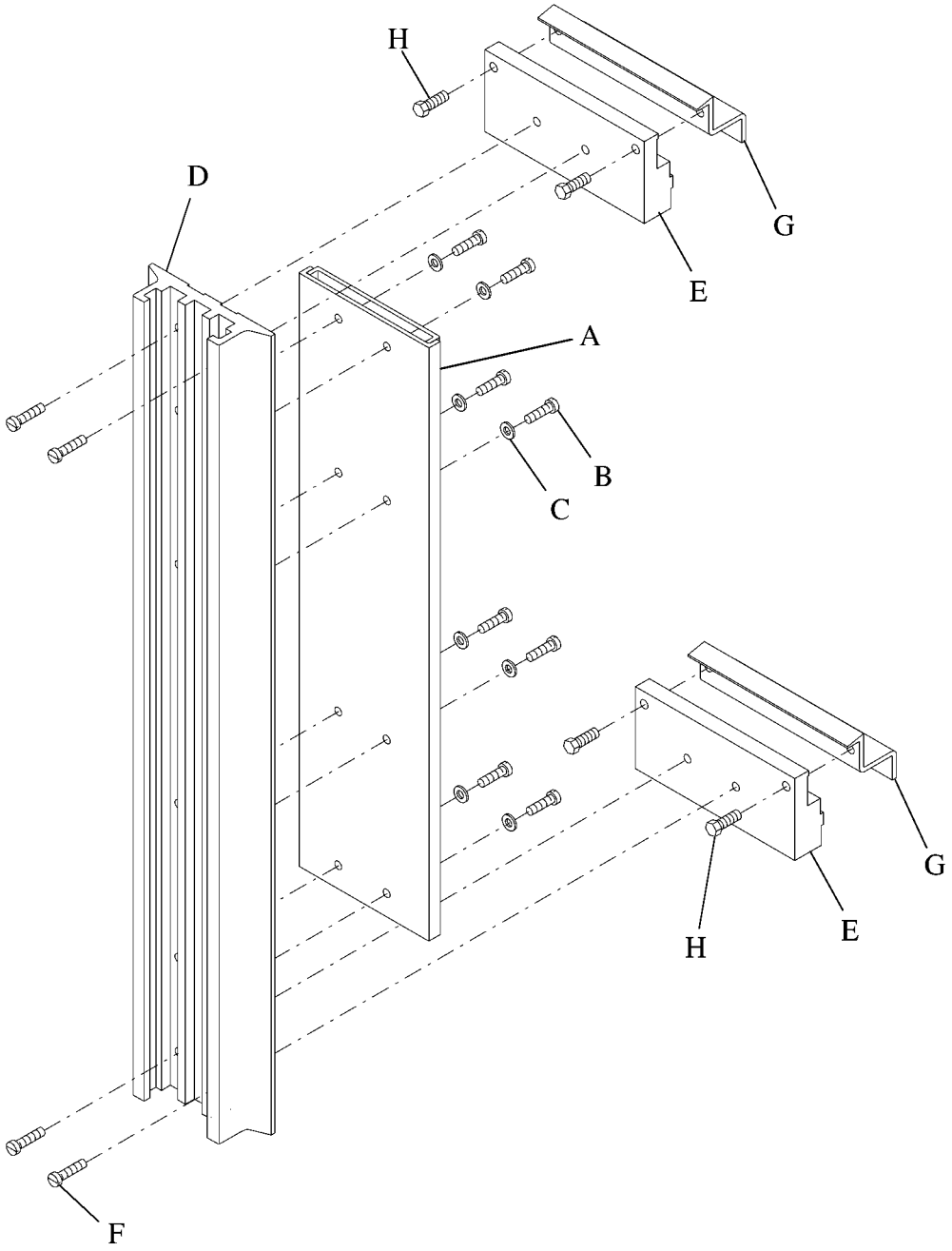

m238_016

7.2 Opthalmoscope Mount, Extends Down

Tools required: Phillips head screwdriver

Installation

1. Install the skid pad (A) and screws (B) on the opthalmoscope hook (C) (see figure 7-2 on page 7-6).

Figure 7-2. Opthalmoscope Mount

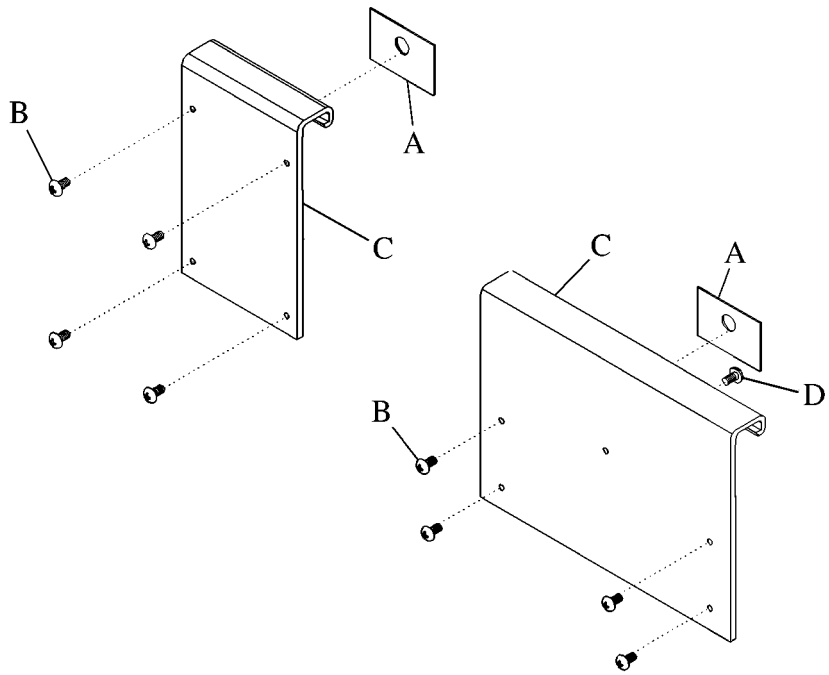

2. For opthalmoscope mount P1020S2 only, install the screw (D) on the opthalmoscope hook (C).

3. Place the opthalmoscope hook (C) over the lip of the Neonatal Horizon® Headwall System raceway, and rotate the opthalmoscope mount assembly against the raceway face.

7.3 Opthalmoscope Mount, Extends Up

Tools required: Phillips head screwdriver

Installation

1. Install the front trough clamp (A) and screws (B) on the opthalmoscope mount (C) (see figure 7-3 on page 7-7).

Figure 7-3. Opthalmoscope Mount

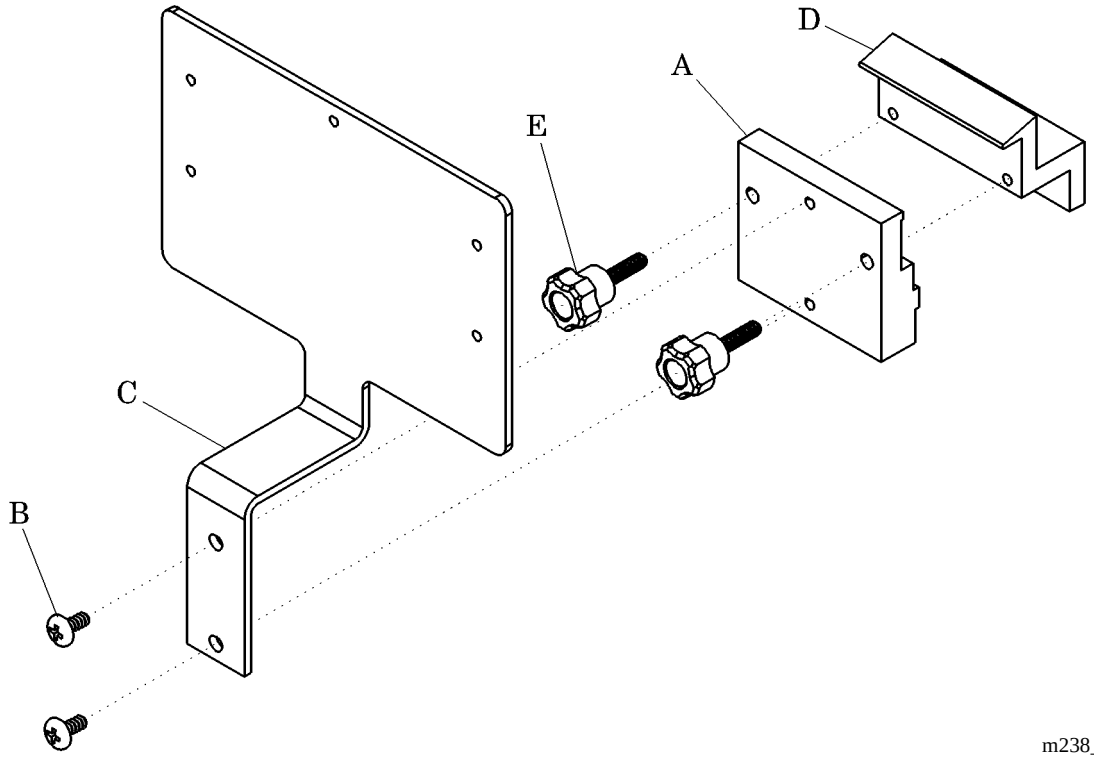

2. Install the rear trough clamp (D) and knobs (E) on the front trough clamp (A).

3. Install the trough clamps (A and D) over the lip of the Neonatal Horizon® Headwall System raceway, and tighten knobs (E).

7.4 Aneroid Sphygmomanometer and Mount

Tools required: Phillips head screwdriver

Installation

1. Install the front trough clamp (A) and screws (B) on the aneroid sphygmomanometer bracket (C) (see figure 7-4 on page 7-8).

Figure 7-4. Aneroid Sphygmomanometer and Mount

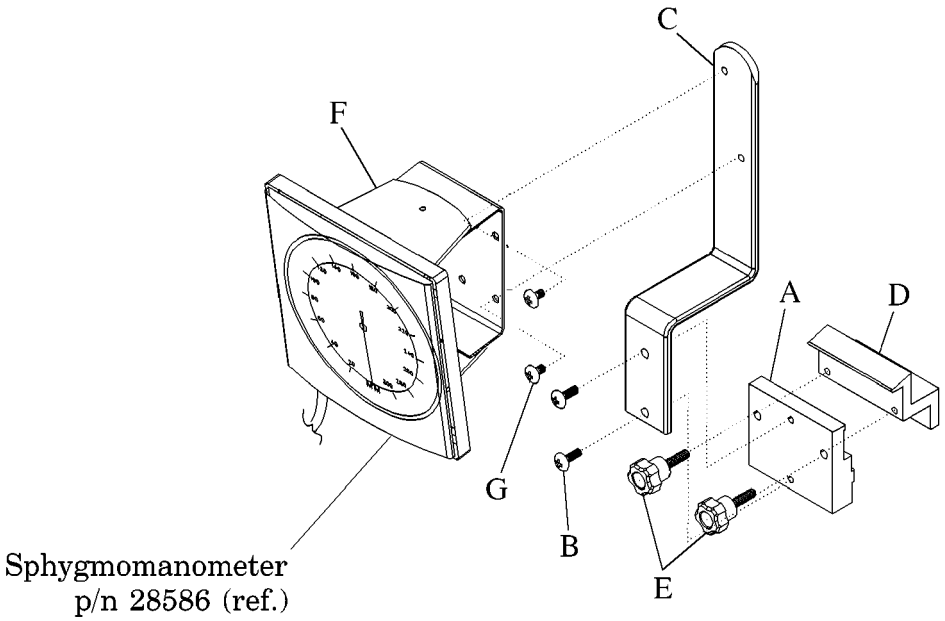

m238_020

2. Install the rear trough clamp (D) and knobs (E) on the front trough clamp (A).

3. Install the aneroid sphygmomanometer (F) and screws (G) on the aneroid sphygmomanometer bracket (C).

4. Install the trough clamps (A and D) over the lip of the Neonatal Horizon® Headwall System raceway, and tighten knobs (E).

7.5 Mercurial Sphygmomanometer and Mount

Tools required: Phillips head screwdriver

Installation

1. Install the skid pad (A), mercurial sphygmomanometer bracket (B), and screws (C) on the sphygmomanometer mount hook (D) (see figure 7-5 on page 7-9).

Figure 7-5. Mercurial Sphygmomanometer and Mount

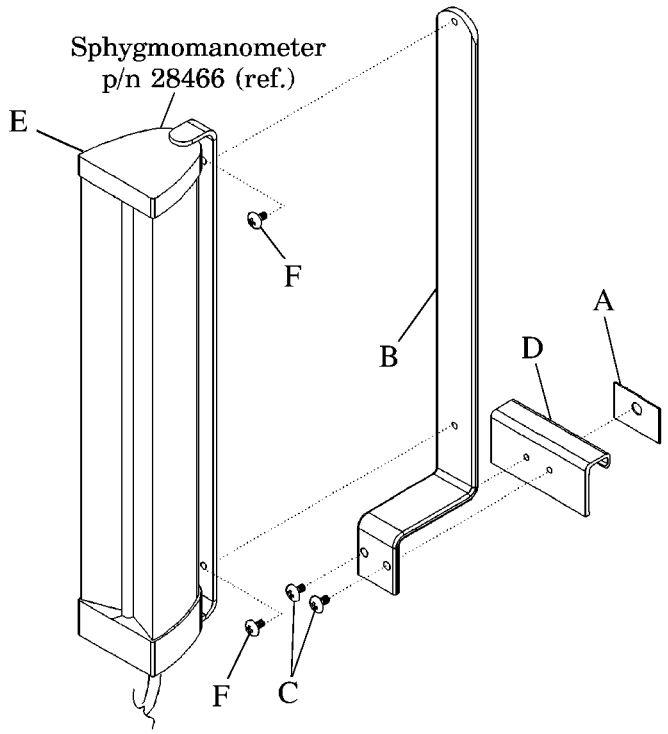

2. Install the mercurial sphygmomanometer (E) and screws (F) on the mercurial sphygmomanometer bracket (B).

3. Place sphygmomanometer mount hook (D) over the lip of the Neonatal Horizon® Headwall System raceway, and rotate mercurial sphygmomanometer assembly against raceway face.

7.6 Cuff Basket

Tools required: Phillips head screwdriver

Installation

1. Install the latch (A) and roll pins (B) on the accessory mount (C) (see figure 7-6 on page 7-10).

Figure 7-6. Cuff Basket

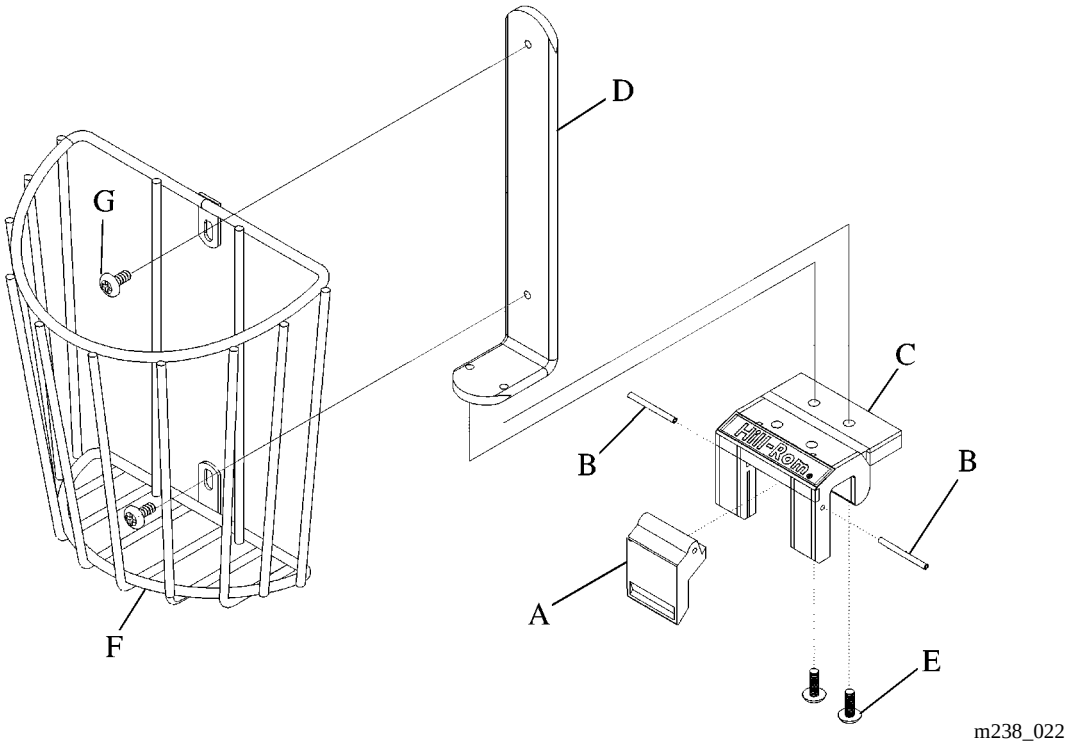

2. Install the cuff bracket (D) and screws (E) on the accessory mount (C).
3. Install the cuff basket (F) and screws (G) on the cuff bracket (D).
4. Raise latch (A) and lower accessory mount (C) over the lip of the Neonatal Horizon® Headwall System raceway.
5. Lower the latch (A) to lock the cuff basket assembly in position on the raceway.

7.7 Bird Blender Mount, Extends Down

Tools required: Phillips head screwdriver

Installation

1. Install the skid pad (A) on the Bird Blender hook (B) (see figure 7-7 on page 7-11).

Figure 7-7. Bird Blender Mount

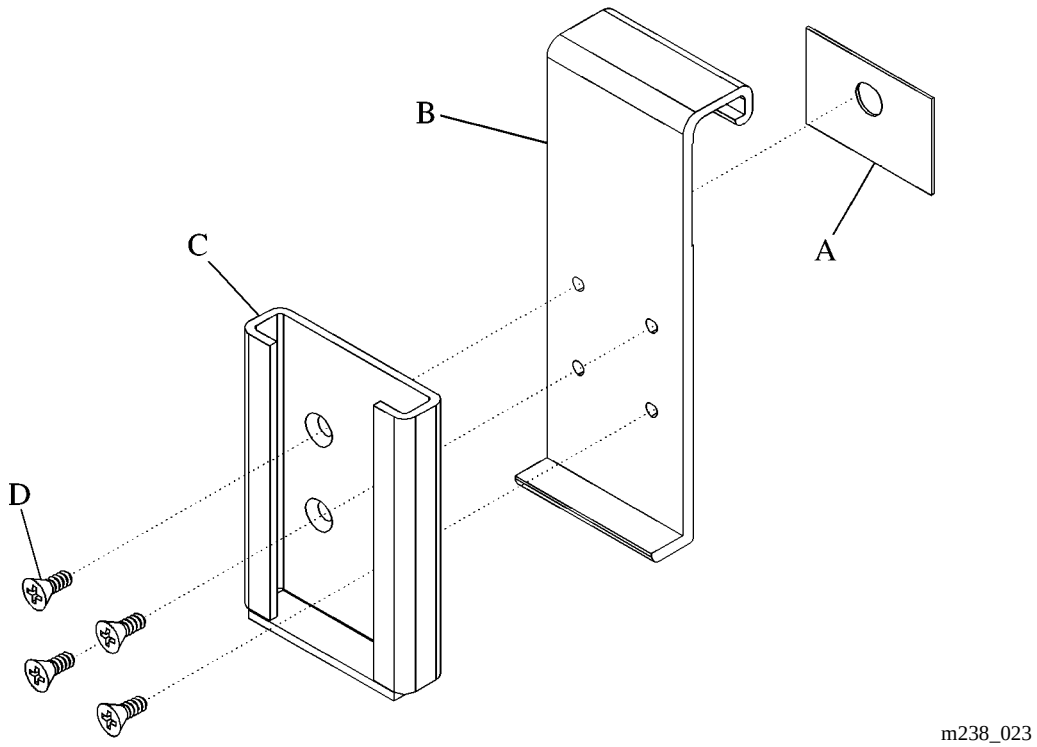

2. Install the dovetail bracket (C) and flathead screws (D) on the Bird Blender hook (B).

3. Place Bird Blender hook (B) over the lip of the Neonatal Horizon® Headwall System raceway, and rotate Bird Blender mount assembly against raceway face.

7.8 Bird Blender Mount, Extends Up

Tools required: Phillips head screwdriver

Installation

1. Install the trough clamp (A) and screws (B and H) on the face clamp (C) (see figure 7-8 on page 7-12).

2. Install the trough clamps (A and C) over the lip of the Neonatal Horizon® Headwall System raceway, and tighten using screws (B).

Figure 7-8. Bird Blender Mount

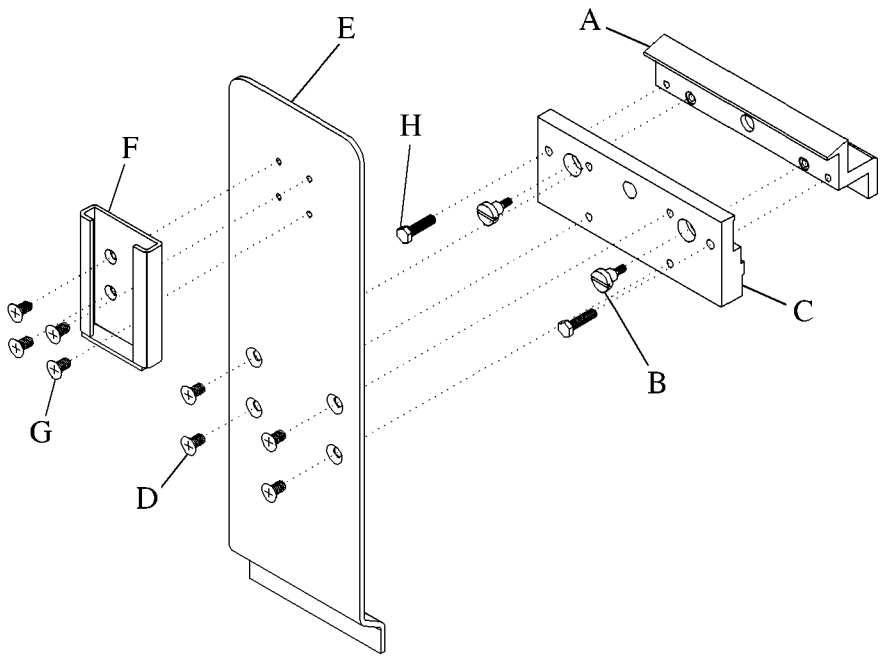

m238_024

3. Install the Bird Blender bracket (E) on the face clamp (C) using screws (D).

4. Install the dovetail bracket (F) and screws (G) on the Bird Blender bracket (E).

7.9 Bottle Slide and Extended Bottle Slide

Tools required: Phillips head screwdriver

Installation

1. Install the skid pad (A) on the bracket (B) (see figure 7-9 on page 7-13).

Figure 7-9. Bottle Slide and Extended Bottle Slide

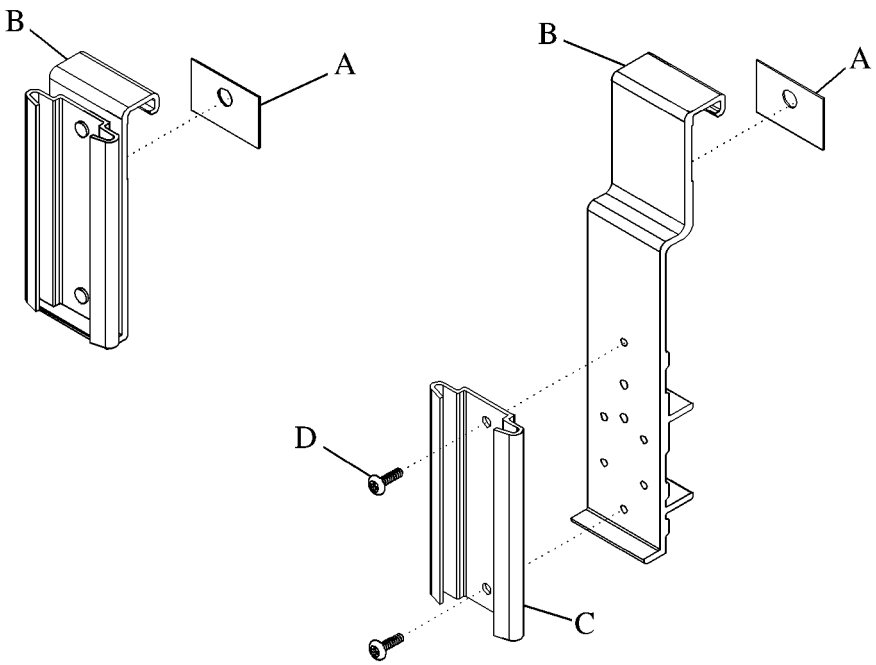

2. For bottle slide P1020N1 only, install the bracket (C) and screws (D) on the bracket (B).

3. Place the bracket (B) over the lip of the Neonatal Horizon® Headwall System raceway, and rotate the bottle slide assembly against the raceway face.

7.10 Cable Organizer

Tools required: Phillips head screwdriver

Installation

1. Install the latch (A) and roll pins (B) on the accessory mount (C) (see figure 7-10 on page 7-14).

Figure 7-10. Cable Organizer

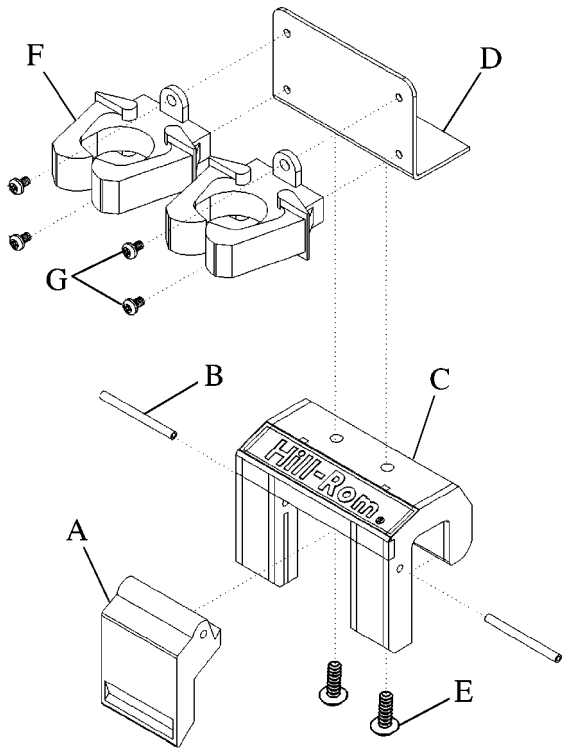

m238_026

2. Install the bracket (D) and screws (E) on the accessory mount (C).
3. Install the cable holders (F) and screws (G) on the bracket (D).
4. Raise the latch (A) and lower the accessory mount (C) over the lip of the Neonatal Horizon® Headwall System raceway.
5. Lower the latch (A) to lock the cable organizer assembly in position on the raceway.

7.11 Resuscitator Bag Holder

Tools required: Phillips head screwdriver

Installation

1. Install the latch (A) and roll pins (B) on the accessory mount (C) (see figure 7-11 on page 7-15).

Figure 7-11. Resuscitator Bag Holder

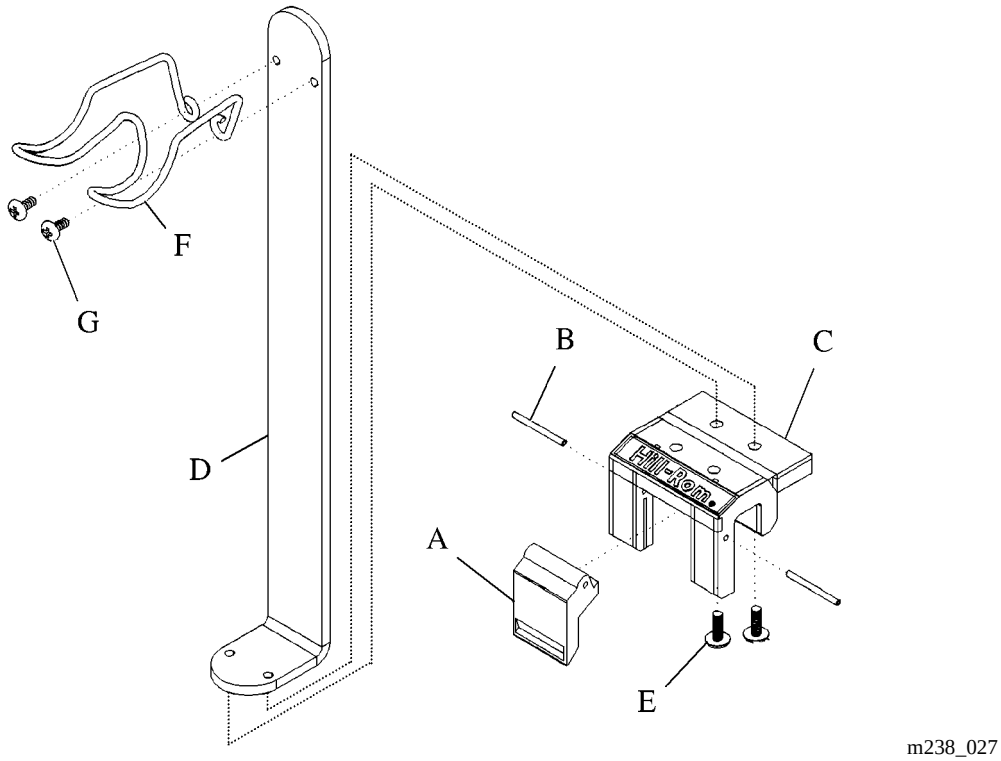

2. Install the resuscitator bag bracket (D) and screws (E) on the accessory mount (C).

3. Install the manual resuscitator bag holder (F) and screws (G) on the resuscitator bag bracket (D).

4. Raise the latch (A) and lower the accessory mount (C) over the lip of the Neonatal Horizon® Headwall System raceway.

5. Lower the latch (A) to lock the cable organizer assembly in position on the raceway.

7.12 STAT Clock/Timer—Pod Mounted

Tools required: Phillips head screwdriver
Rivet gun
Adjustable Wrench

Installation

1. Install the cover (A) on the bail (B) (see figure 7-12 on page 7-17).
2. Install the pivot frame (C) on the bail (B) using screws (D), nylon washers (E), and nuts (F).
3. Install the STAT clock/timer (G) on the pivot frame (C) using screws (H) and speed nuts (J).
4. Install the cover (A) on the pivot frame (C) using rivets (K).
5. Install the bail (B) on the STAT clock/timer arm (L) using screw (M), nylon washers (N), and locknut (P).
6. Install the front trough clamp (R) and screws (S) on the STAT clock/timer arm (L).
7. Install the rear trough clamp (T) and knobs (U) on the front trough clamp (R).
8. Install the trough clamps (R and T) over the lip of the Neonatal Horizon® Headwall System raceway, and tighten using knobs (U).

Figure 7-12. STAT Clock/Timer—Pod Mounted

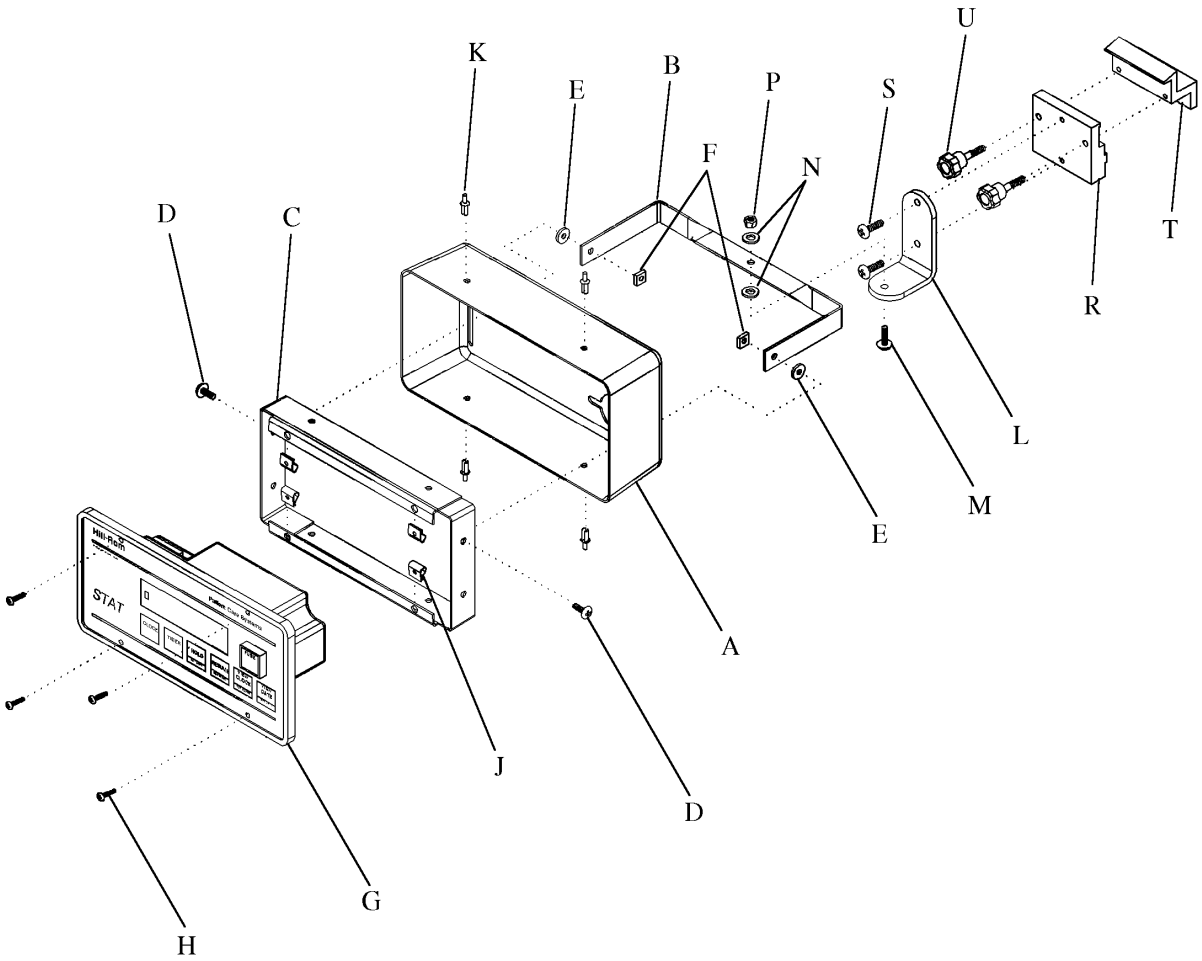

m238_028

7.13 Utility Hook

Tools required: Phillips head screwdriver

Installation

1. Install the latch (A) and roll pins (B) on the accessory mount (C) (see figure 7-13 on page 7-18).

Figure 7-13. Utility Hook

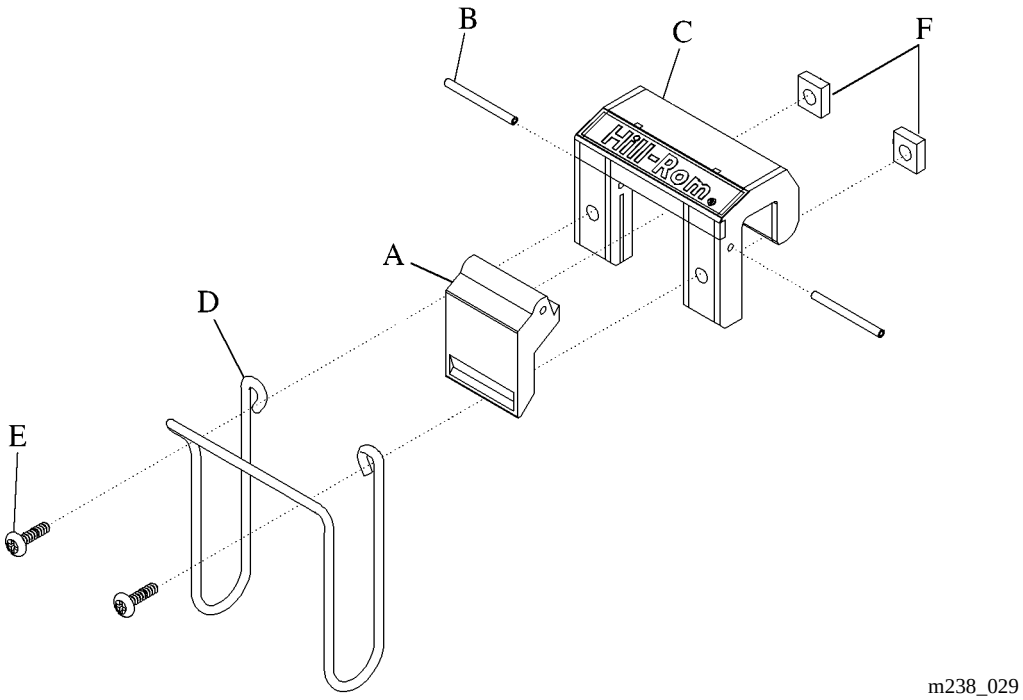

2. Install the cuff clip (D), screws (E), and nuts (F) on the accessory mount (C).

3. Raise the latch (A) and lower the accessory mount (C) over the lip of the Neonatal Horizon® Headwall System raceway.

4. Lower the latch (A) to lock the utility hook assembly in position on the raceway.

7.14 Short Post and Dual Post Utility Mount

Tools required: Phillips head screwdriver

Installation

1. Install the skid pads (A) to the mounting bracket (B) (see figure 7-14 on page 7-20).
2. Install the IV block (C) and screws (D) to the bracket assembly (E).
3. Install the bracket assembly (E) and screws (F) to the mounting bracket (B).
4. For dual post utility mount P972D01 only, install the aluminum tube mounts (G) and pivot post (H) on the post mount assembly (J).
5. Install the utility mount post (K), adapter (L), and knob assembly (M) on the IV block (C).
6. Place the mounting bracket (B) over the lip of the Neonatal Horizon® Headwall System raceway, and rotate the utility mount assembly against the raceway face.

Figure 7-14. Short Post and Dual Post Utility Mount

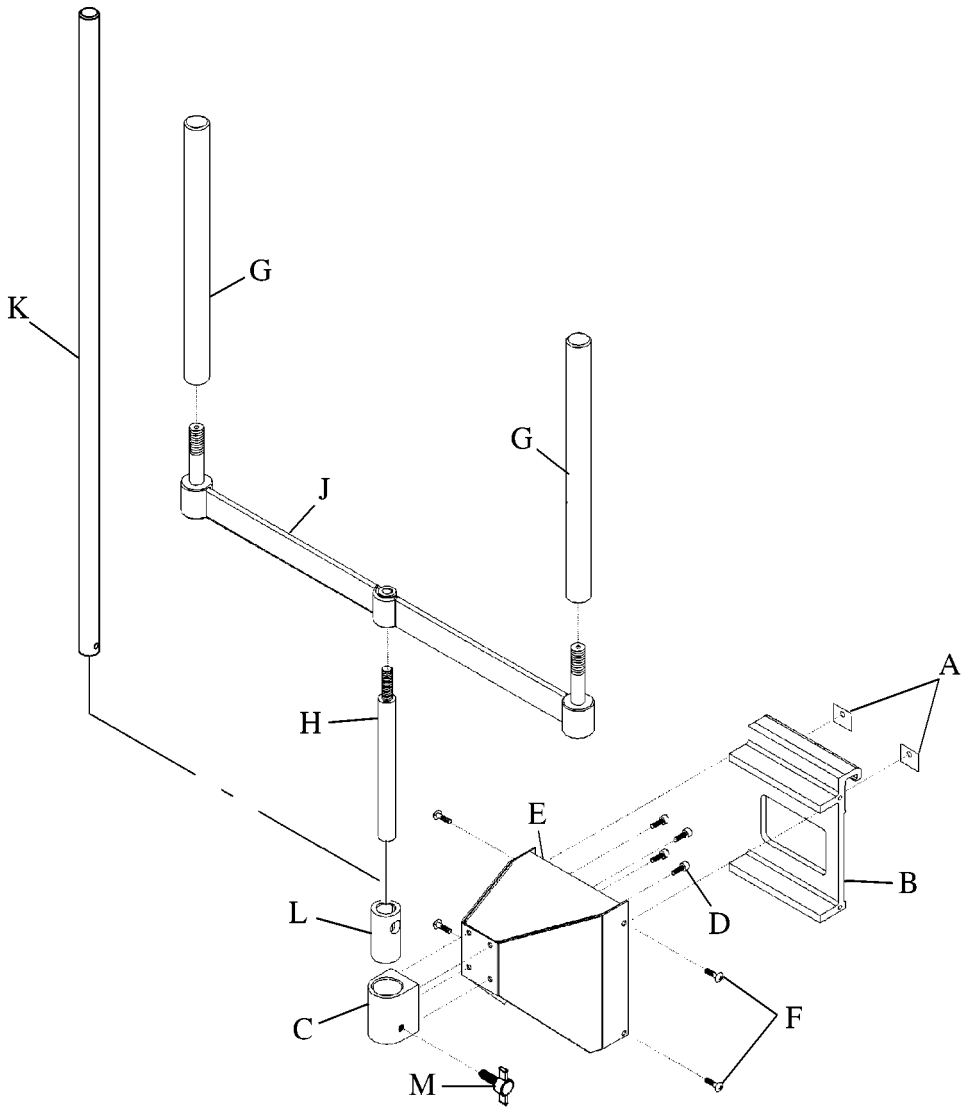

m238_030

7.15 ISS Support Arm and Transfer Pole

Tools required: Screwdriver
Allen wrench

Installation

1. Install the skid pads (A) to the mounting bracket (B) (see figure 7-15 on page 7-22).
2. Install the IV block (C) and screws (D) to the bracket assembly (E).
3. Install the bracket assembly (E) and screws (F) to the mounting bracket (B).
4. Install the IV hooks (G) and roll pins (H) on the hub (J).
5. Install the ferrule (K) and insert (L) on the collet (M).
6. Install the end cap (N), o-ring (P), washer (R), and screw (S) on the telescoping tube (T).
7. Install the locator (U), inner insulator (V), and spring pins (W) on the transfer pole (X).
8. Insert the telescoping tube (T) into the transfer pole (X).
9. Install the collet (M) on the transfer pole (X).
10. Install the hub (J) and screw (Y) on the telescoping tube (T).
11. Place the bracket assembly (E) over the lip of the Neonatal Horizon® Headwall System raceway, and rotate it against the raceway face.
12. Install the locator (U), adapter (Z), and knob assembly (AA) on the IV block (C).

Figure 7-15. ISS Support Arm and Transfer Pole

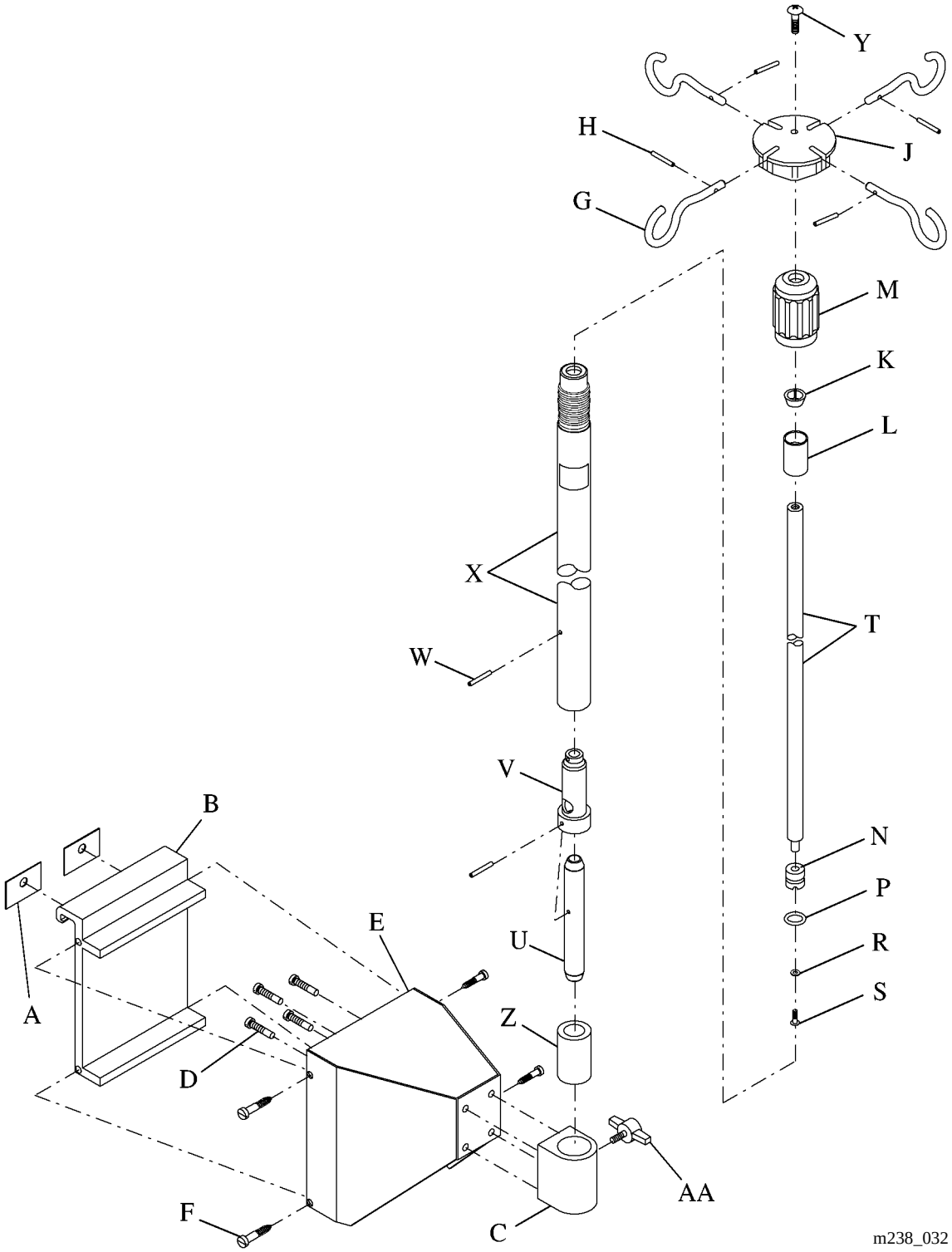

7.16 IV Hanger - for use with Bottle Slide P1020A1

Installation

Install the IV hanger (A) on the bottle slide P1020A1 (B) (see figure 7-16 on page 7-23). (Also see figure 7-9 on page 7-15.)

Figure 7-16. IV Hanger

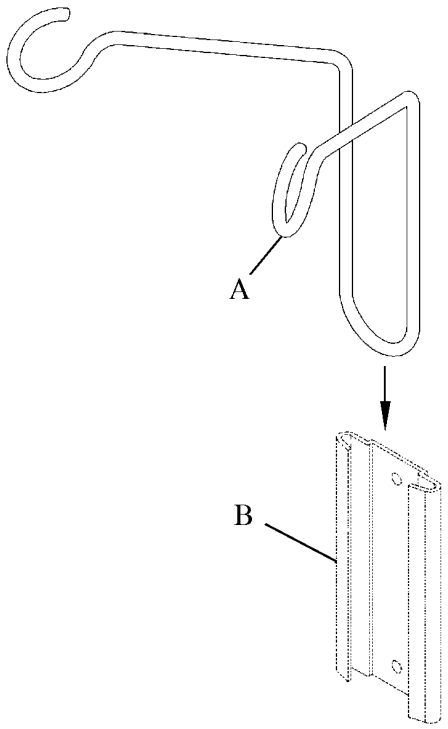

m238_033

7.17 Universal Holder

Tools required: Phillips head screwdriver

Installation

1. Install the front trough clamp (A) and screws (B) on the holder (C) (see figure 7-17 on page 7-24).

Figure 7-17. Universal Holder

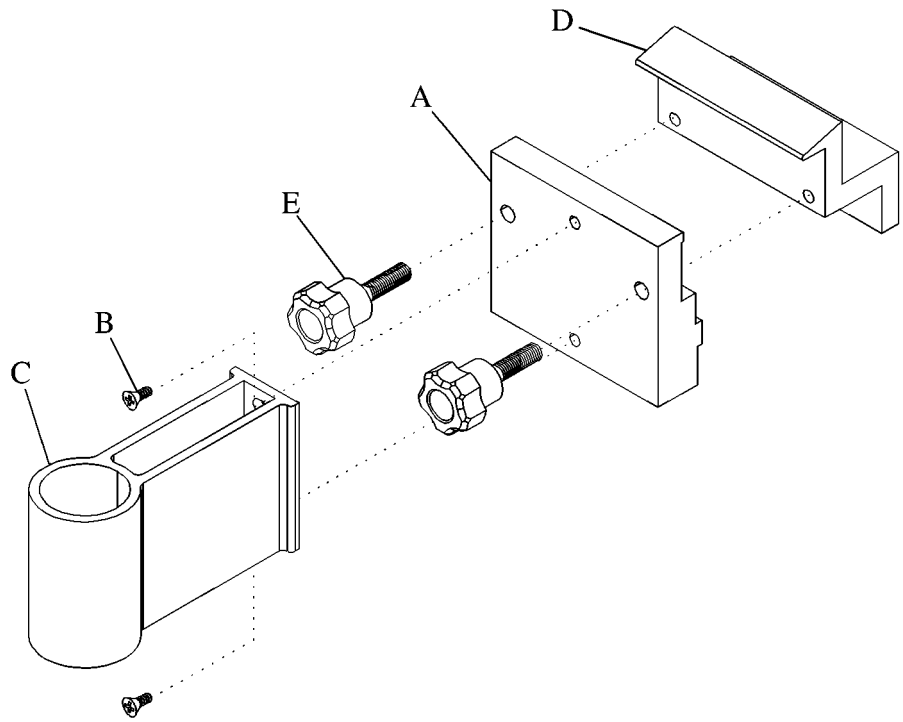

2. Install the rear trough clamp (D) and knobs (E) on the front trough clamp (A).

3. Install the trough clamps (A and D) over the lip of the Neonatal Horizon® Headwall System raceway, and tighten the knobs (E).

7.18 Chart Holder

Tools required: Phillips head screwdriver
Adjustable wrench

Installation

1. Install the screws (A), washers (B), and locknuts (C) on the back panel (D) (see figure 7-18 on page 7-25).

Figure 7-18. Chart Holder

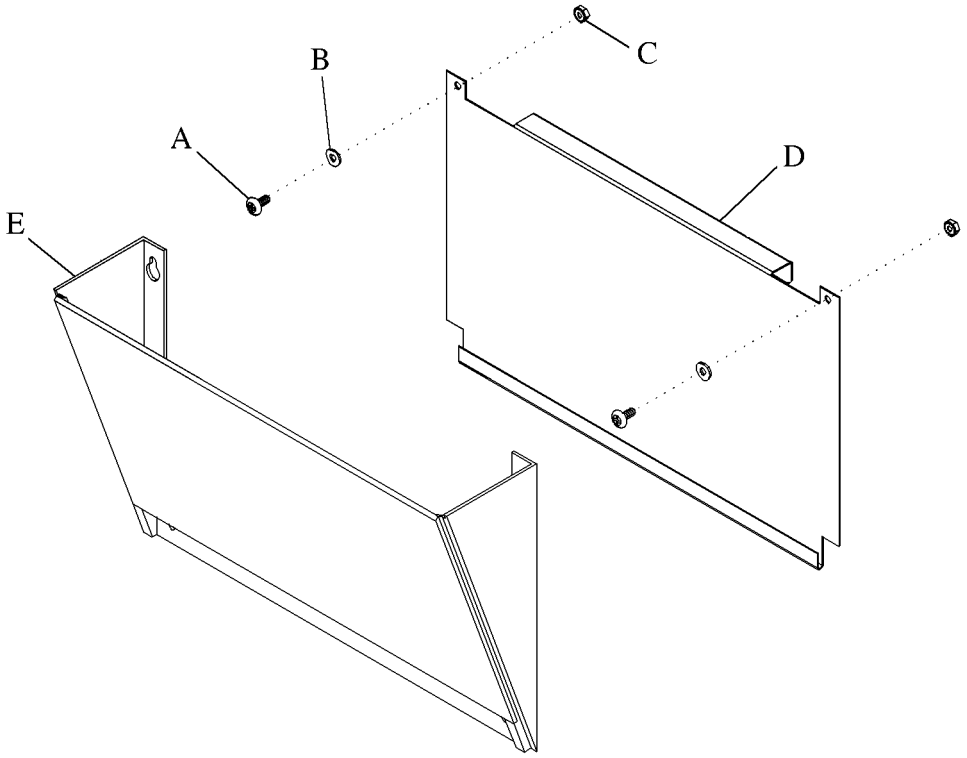

2. Install the filing pocket (E) on the back panel (D).

3. Place the back panel (D) over the lip of the Neonatal Horizon® Headwall System raceway, and rotate the chart holder assembly against the raceway face.

7.19 Waste Receptacle Assembly

Tools required: Screwdriver
Adjustable wrench

Installation

1. Install the strap (A), waste basket (B), screws (C), and hex nuts (D) on the hanger bracket (E) (see figure 7-19 on page 7-26).

Figure 7-19. Waste Receptacle Assembly

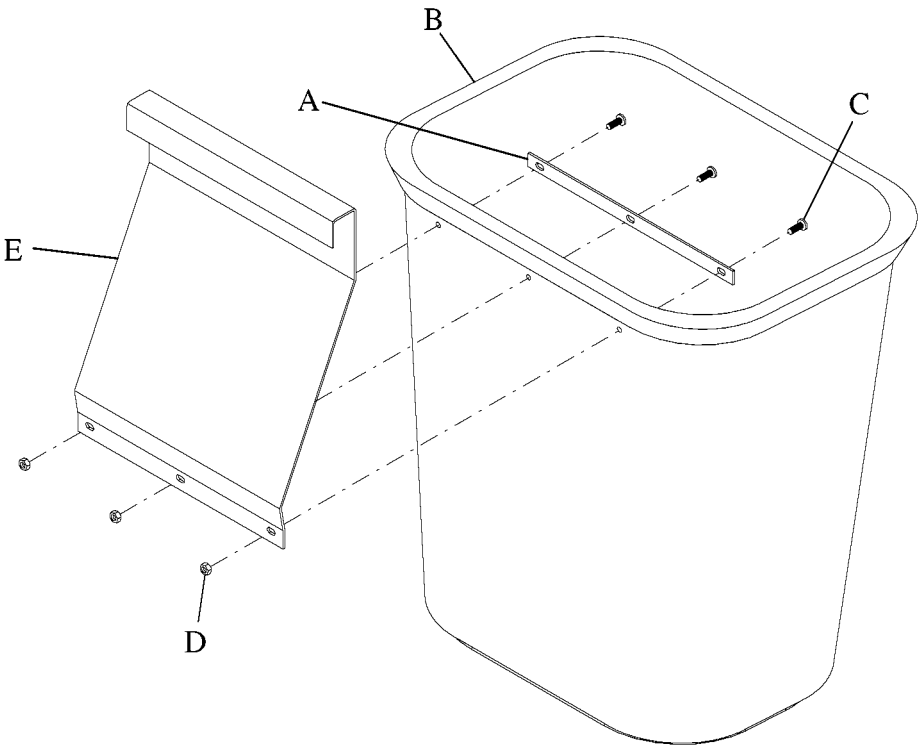

2. Place the hanger bracket (E) over the lip of the Neonatal Horizon® Headwall System raceway, and rotate the waste receptacle assembly against the raceway face.

7.20 Mobile Storage Cabinet

Tools required: Drill
Phillips head screwdriver
Adjustable wrench

Installation

1. Install the casters (A), ell brackets (B), and corner brackets (C) on the bottom panel (D) using the screws (E), locknuts (F), and pan head screws (G) (see figure 7-20 on page 7-28).

2. Install the T-molding (H) and power pins (J) to the left-hand end panel (K).

3. Install the left-hand drawer guides (L) to the left-hand end panel (K) using the pan head screws (M).

4. Install the T-molding (N) and power pins (P) to the right-hand end panel (R).

5. Install the right-hand drawer guides (S) to the right-hand end panel (R) using the pan head screws (T).

6. Install the ell brackets (U) and corner brackets (V) on the top panel (W) using the pan head screws (X).

7. Install the left-hand end panel (K), back panel (Y), and right-hand end panel (R) to the bottom panel (D) and top panel (W) using the pan head screws (X).

8. Install the pulls (Z) and drawer mounting brackets (AA) on the drawer fronts (AB) using the screws (AC).

9. Install the plastic drawers (AD) on the drawer mounting brackets (AA) using the screws (AE).

10. Slide the plastic drawers (AD) onto the drawer guides (L and S).

11. Install the loop arm fasteners (AF) on the top panel (W).

12. Install the hook fasteners (AG) on the cushion (AH).

13. Install the cushion (AH) on the top panel (W).

Figure 7-20. Mobile Storage Cabinet

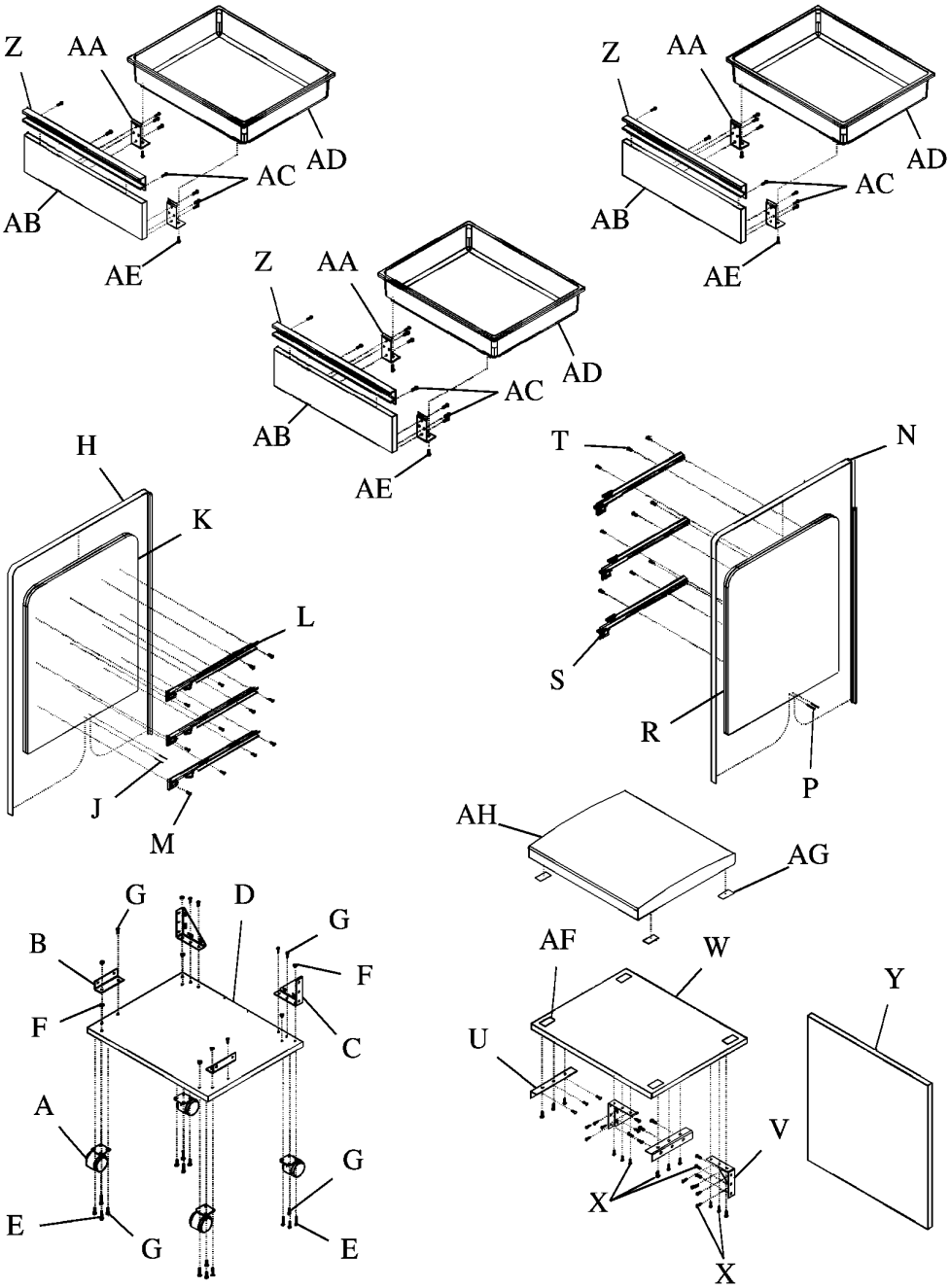

m238_037

7.21 Large and Small Storage Basket

Tools required: Phillips head screwdriver
Adjustable wrench

Installation

NOTE:
Steps 1 through 4 apply to the small storage basket. Step 5 applies to the large storage basket.

1. Install the latches (A) and roll pins (B) on the accessory mounts (C) (see figure 7-21 on page 7-30).

2. Install the small basket (D) on the accessory mounts (C) using the pivot screws (E) and the shake proof nuts (F).

3. Raise the latches (A) and lower the accessory mounts (C) over the lip of the Neonatal Horizon® Headwall System raceway.

4. Lower the latches (A) to lock the small basket assembly in position on the raceway.

5. Place the large basket (G) over the lip of the Neonatal Horizon® Headwall System raceway, and rotate it against the raceway face.

Figure 7-21. Large and Small Storage Basket

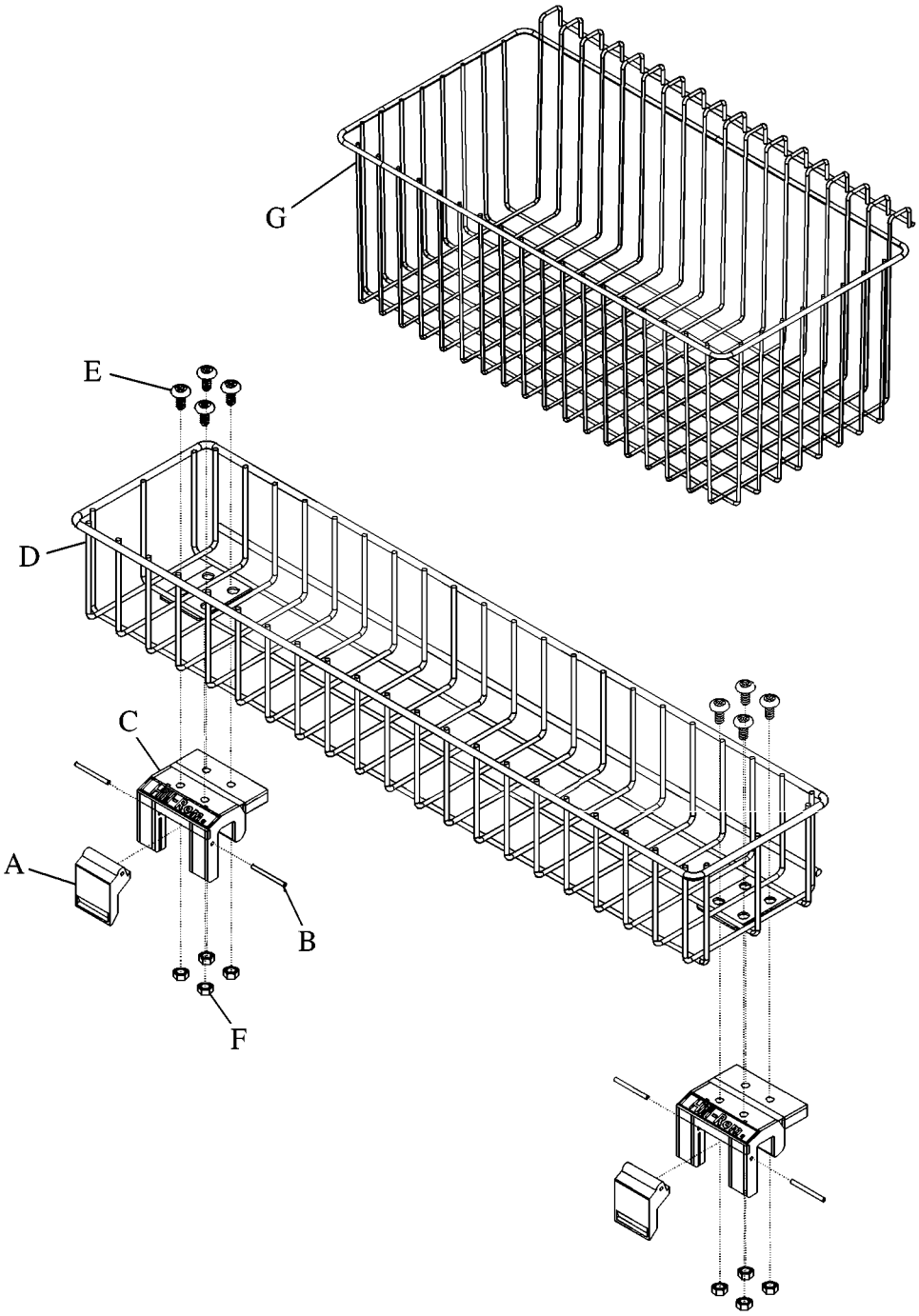

7.22 Utility Shelf

Tools required: Phillips head screwdriver

Installation

1. Install the shelf hangers (A) and screws (B) on the shelf mounts (C) (see figure 7-22 on page 7-31).

Figure 7-22. Utility Shelf

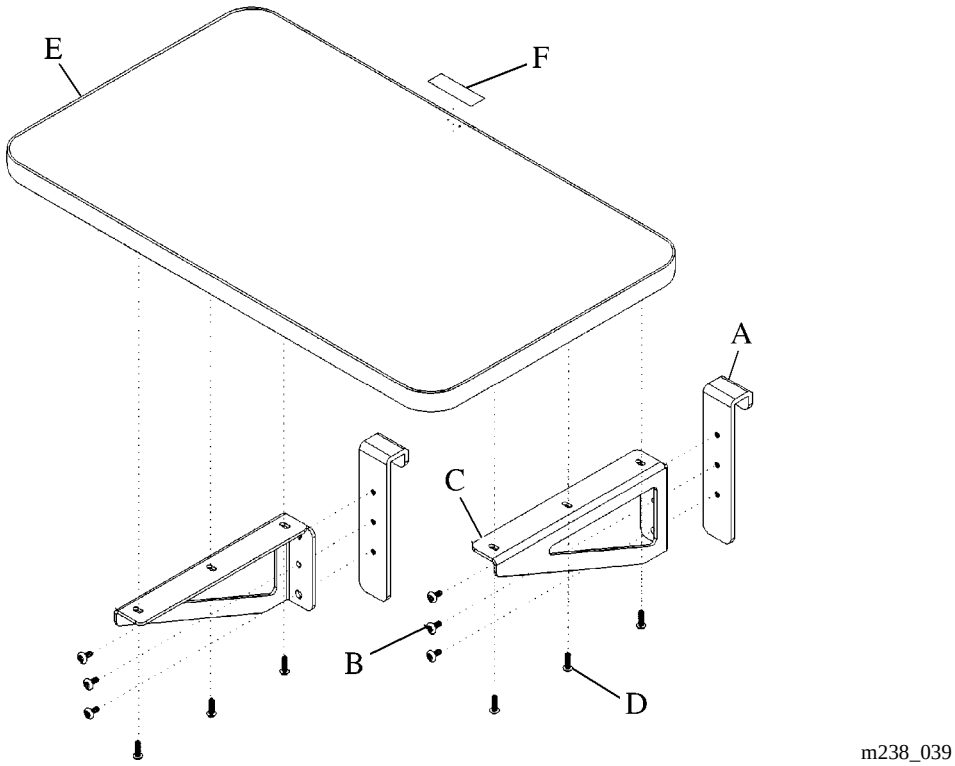

2. Install the shelf mounts (C) and pan head screws (D) on the shelf top (E).
3. Install the load label (F) on the shelf top (E).
4. Place the shelf hangers (A) over the lip of the Neonatal Horizon® Headwall System raceway, and rotate the utility shelf assembly against the raceway face.

7.23 Arm Light Mount

Tools required: Screwdriver

Installation

1. Install the adaptor (A) on the IV block (B) (see figure 7-23 on page 7-32).

Figure 7-23. Arm Light Mount

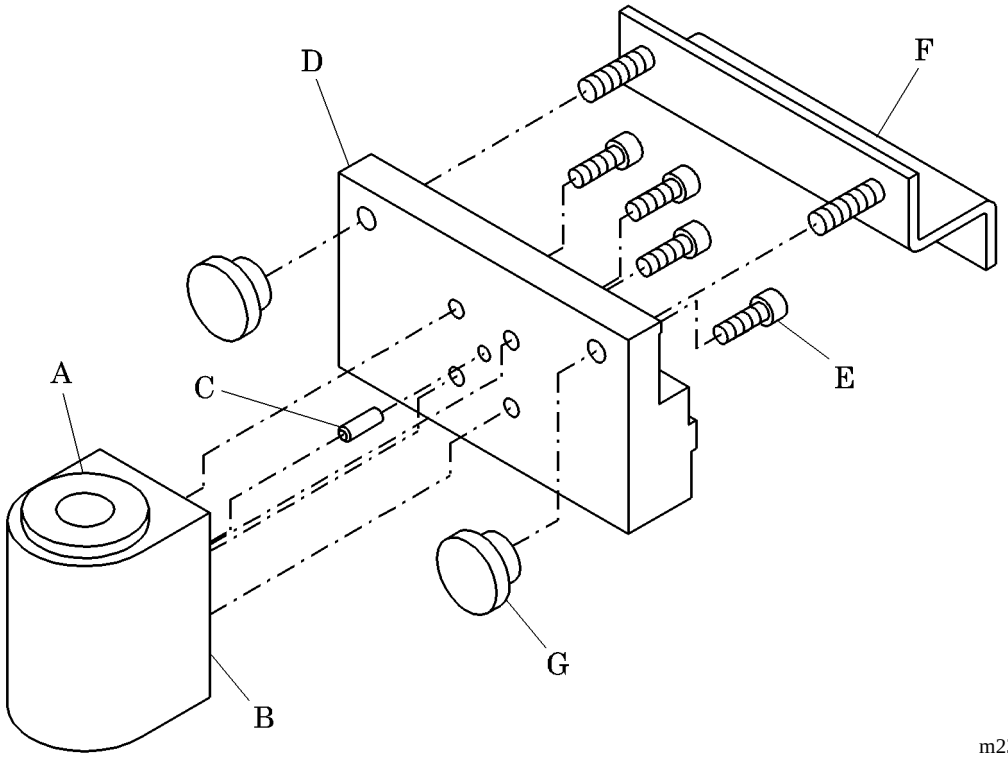

2. Install the roll pin (C), face clamp (D), and screws (E) on the IV block (B).

3. Install the clamp assembly (F) and knobs (G) on the face clamp (D).

4. Install the face clamp/clamp assembly (D and F) over the lip of the Neonatal Horizon® Headwall System raceway, and tighten the knobs (G).

7.24 Incandescent and Incandescent/Fluorescent Arm Lamp - for use with Arm Light Mount P100801

Installation

Install the incandescent arm lamp (A) or incandescent/fluorescent arm lamp (B) on the arm light mount P100801 (see figure 7-24 on page 7-33).

Figure 7-24. Incandescent and Incandescent/Fluorescent Arm Lamp

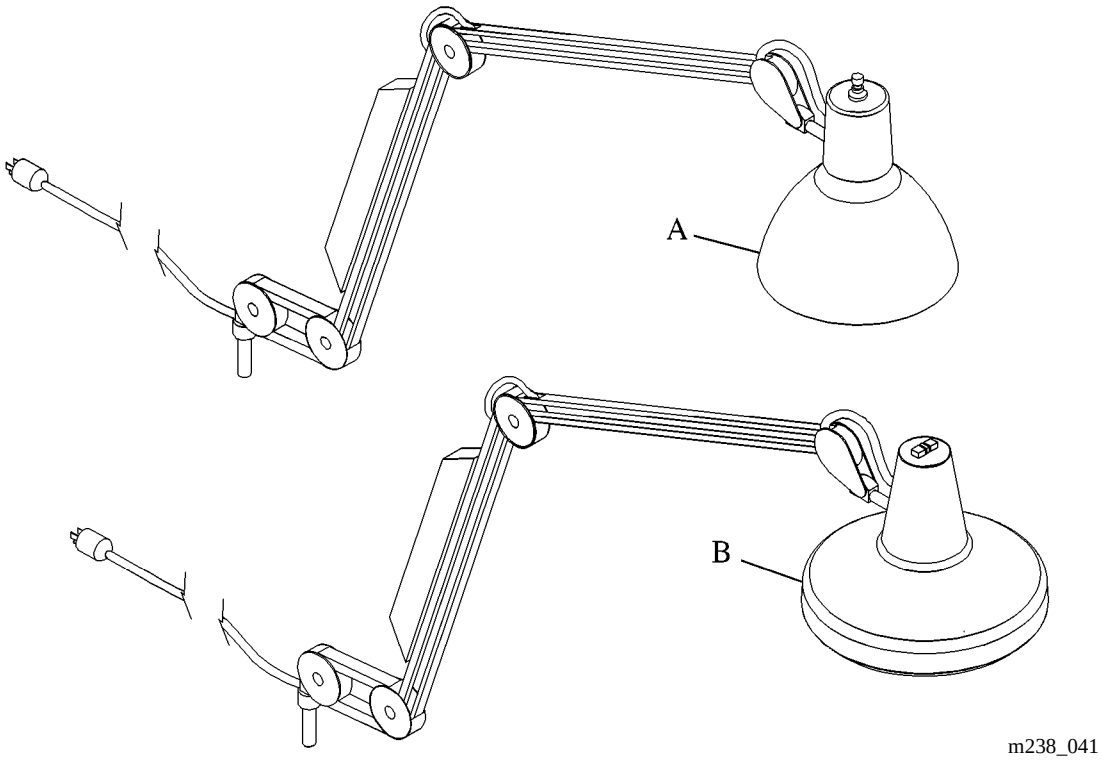

7.25 Exam Plus® Light Mount

Tools required: Allen wrench
Adjustable wrench

Installation

1. Install the accessory mount (A), screws (B and C), and acorn nuts (D) on the Exam Plus® Light mount bracket (E) (see figure 7-25 on page 7-34).

Figure 7-25. Exam Plus® Light Mount

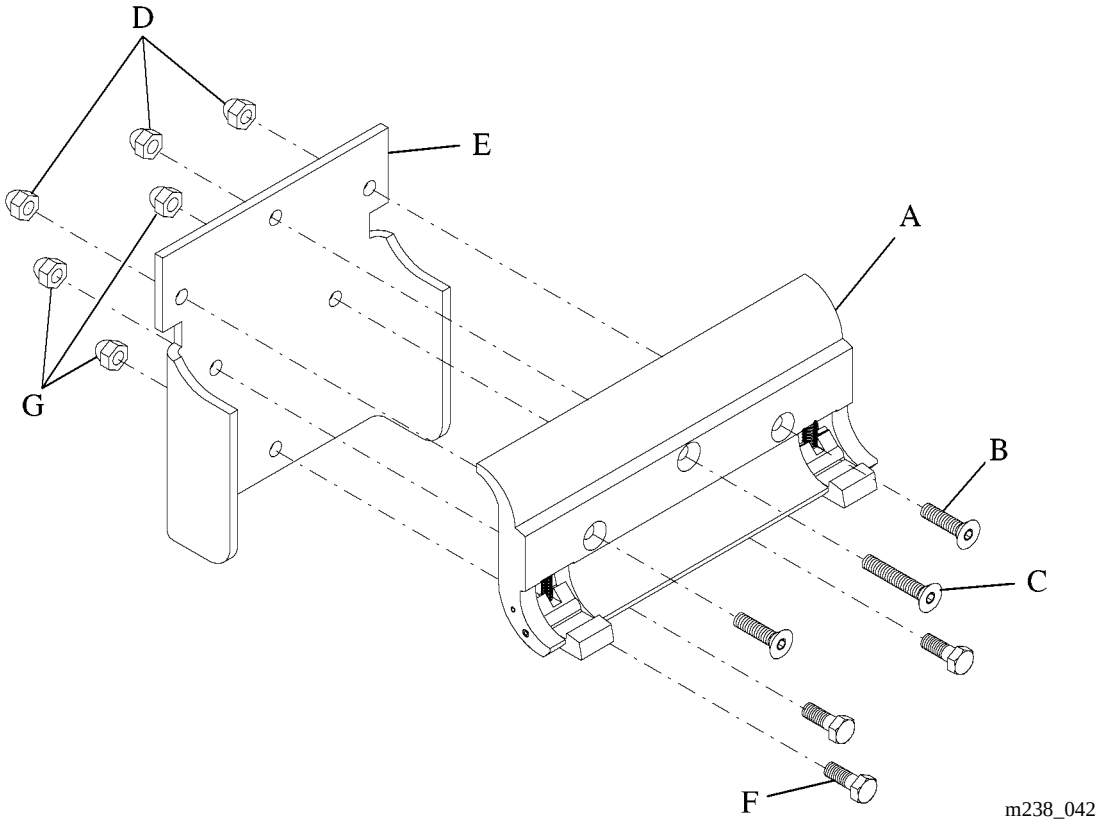

2. Install the hex bolts (F) and acorn nuts (G) on the Exam Plus® Light mount (E).

3. Install the Exam Plus® Light mount on the Neonatal Horizon® Headwall System raceway.

7.26 Utility Light

Tools required: Phillips head screwdriver

Installation

1. Install the latch (A) and roll pins (B) on the accessory mount (C) (see figure 7-26 on page 7-35).

Figure 7-26. Utility Light

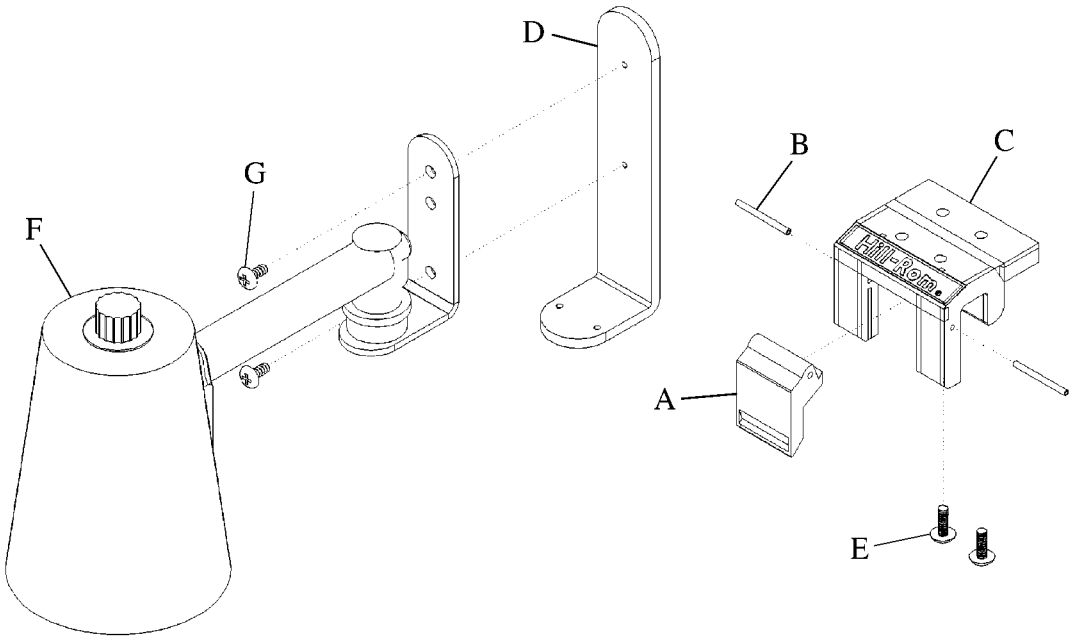

m238_044

2. Install the utility light bracket (D) and screws (E) on the accessory mount (C).

3. Install the track light (F) and screws (G) on the utility light bracket (D).

4. Raise the latch (A) and lower the accessory mount (C) over the lip of the Neonatal Horizon® Headwall System raceway.

5. Lower the latch (A) to lock the utility light assembly in position on the raceway.

NOTES: