# High Efficiency Sand Filters
# CW430 Series

# Table of Contents


Preface

1. Installation 2
   - i. Unpacking Filter System 2
   - ii. Rigging 2
   - iii. Locating Filter System 2
   - iv. Filter System Assembly 3
     - i. Placing, Arranging, and Leveling Vessel(s) 3
     - ii. Assembling Manifolds 4
     - iii. Valve Control Wiring 4
   - v. Electrical Connections 4
     - i. General 4
     - ii. Control / Motor Starter Package 5
     - iii. Control Package 5
   - vi. Pipe Connections 6
     - i. Supply & Return Lines 6
     - ii. Backwash Supply 7
     - iii. Waste Line 7
   - vii. Media Installation 7

2. Documentation 9
   - i. Media MSDS 9
   - ii. Installation Check List 16
   - iii. Request for Startup 17
   - iv. Startup Data Sheet 18
   - v. Filter Log Sheet 19
   - vi. AmeriWater Warranty 20

3. Operation 21
   - i. Seasonal Startup 21
   - ii. Seasonal Shutdown 22
   - iii. Freeze Protection 23
   - iv. Sequence of Operation 24

4. Maintenance
    i. Maintenance Schedule 29
    ii. Control Functions 29
    iii. Media (Level & Condition) 30
    iv. Pump Service 30
    v. Troubleshooting Guide 31

5. Drawings 32

6. System Component Cut Sheets 43

# Installation, Operation, Maintenance AmeriWater Filter Systems Series CW

This Installation, Operation, and Maintenance manual contains instructions for the AmeriWater filter series CW. Check the model number on your filter system (located on the inside of control enclosure door).

**If CW is not present in model number - Do Not Proceed**.
**Contact AmeriWater at 800.535.5585 for instructions.**

**Read and understand each section of this manual before proceeding with installation and operation of your AmeriWater Filter System.**

**CAUTION: All WARNINGS AND CAUTIONS MUST BE FOLLOWED TO AVOID PERSONAL INJURY!**

This filter system has been factory assembled and tested before shipping. The filter system may be broken down for shipping, with major components remaining assembled.

**Report damage or missing parts immediately to AmeriWater at 800.535.5585.**
**This filter system must be started by a Factory Authorized Representative.**

**START UP BY ANYONE OTHER THAN AN AUTHORIZED AGENT WILL VOID WARRANTY!**

**Contact AmeriWater (800.535.5585) at least two (2) weeks in advance to arrange start up.**

Specifications subject to change without notice. Local codes supersede instructions in this manual. Contact AmeriWater 800.535.5585 with questions or to report significant deviations between local code and instructions.

**System Description**
AmeriWater High Efficiency Filter System series CW are composed of the following major components: (Ref: Drawing CW)
Filter Vessel(s)
Filter Pump
Backwash Pump (optional, not shown)
Pre-assembled pipe manifolds (may be packed loose)
Valves
Control / Motor Starter Panel (Ref: CP)
Skid

# 1 Installation

## 1.1 Unpacking Filter System

**NOTE: Filter components may be attached to sides of crate or packed in boxes within shipping crate. Be sure to remove all components before disposing of crate.**

**DO NOT LIFT OR PULL FILTER VESSELS BY SIDE PORTS; INTERNAL COMPONENTS MAY BE DAMAGED!**

a) Inspect shipping crate(s) and packages for damage. Before signing bill of lading, report any damage to AmeriWater 800.535.5585.
b) Remove top of crate then break down sides as necessary to remove contents. Report any damage immediately to AmeriWater 800.535.5585l
c) Unpack filter system as close as possible to installation location.
d) Flange gaskets, bolts, and pipe stand hangers (if applicable) are contained in cardboard boxes packed in crate(s).

## 1.2 Rigging

a) Pallets should be lifted by a forklift or crane. Filter systems should be rigged from lift points. **<u>Do not</u> allow rigging straps to contact system components.**

## 1.3 Locating Filter System

a) Filter should be located on a level floor or housekeeping pad.
b) Vibration pads (not included) may be used under components and pipe stands for vibration isolation.

**NOTE: Vibration pads, if used, should be placed under all components to ensure proper alignment.**

c) Floor load rating must be sufficient to accept filter weight. (Ref: Drawing CW)
d) Place system in close proximity to water to be filtered. Factory representative should be consulted if filter will be over 20 feet from water source.
e) Protect system from water temperatures below 32 degrees F and above 140 degrees F unless filter is designed for those temperature applications.

## 1.4 Filter System Assembly

## Placing, Arranging, and Leveling Vessel(s)

## Skid mounted systems:

a) Place system skid in desired location and level skid.

**NOTE: If system was shipped assembled, the pipe assembly may be loose at flanges to avoid flex damage. Some systems will be shipped broken down to avoid damage from flexing.**

b) Arrange vessels with valves front.
c) Multi vessel systems are labeled and should be arranged in order from left to right. (Use lower pipe manifold as guide for spacing and leveling vessels.)

**CAUTION! WARNING! CAUTION!**

**PERSONAL INJURY MAY RESULT!**
**READ FOLLOWING CAREFULLY BEFORE PROCEEDING!**

**TIPPING HAZARD may exist on empty, freestanding, multi-vessel systems with upper manifold attached.**

**READ THE FOLLOWING PARAGRAPH BEFORE PROCEEDING!**
**With vessels properly aligned and leveled and with lower manifold and pipe stands attached, add base (stone) media. (See media addition sec 6 in this manual).**
**This will counter balance the system and reduce tipping hazard.**

**NOTE: Be sure that vessels are properly placed and aligned before adding base media. Vessels will be difficult to move with media added.**

## Assembling Manifolds

**NOTE: Flange bolts, and gaskets are packed in separate cardboard box contained in filter shipping crate.**

a) Align upper and lower manifolds with vessels. Install flange gaskets and bolt manifold flanges to vessel(s). Do not tighten flange bolts at this time. Minor adjustments in vessel alignment may be necessary at this time.
b) Assemble all interconnecting manifold flanges and secure unions. Tighten all connecting bolts at this time.

**WARNING:**
**DAMAGE TO MANIFOLD MAY RESULT IF THE MANIFOLD IS PLACED UNDER STRESS OR IF FLANGE BOLTS ARE OVER TIGHTENED!**

## Valve Control Wiring

**For single vessel systems: valve wiring is pre-wired at factory.**
**For multi-vessel systems: valve wiring for vessel A is pre-wired at factory. Wiring for remaining vessels is coiled at each vessel. Wires are tagged with number corresponding to the output number on the PLC.** (Ref: drawing TBIO)

## 1.5 Electrical

**General:**
**NOTE: Filter control panel and all pumps must have a solid earth ground. Conduit and water pipe are NOT acceptable ground.**

a) All wiring must be properly sized, rated, and connected in accordance with local, state, and national electrical codes.
b) Filter system should be on a dedicated circuit originating at a service disconnect panel.

**NOTE: If filter pump motor starter is not factory supplied it must be wired with a dedicated disconnect.**

c) Penetrations to filter control panel should be made with watertight connectors to preserve panel NEMA 4X rating.

## Control / Motor Starter Package (Ref: Drawing CPMS)

a) Factory installed motor starter package includes a service disconnect, motor starter, and transformers pre-wired to the PLC. These systems require a single point electrical connection to the service disconnect. Line service must be rated to pump motor requirements.
   **Standard systems are factory set for 460V, 3ph service. Optional power supply factory wired as ordered.**
b) Wire the pump motor from the motor starter with seal tight (provided).

**NOTE: If optional backwash booster pump is used and a second motor starter is factory supplied, refer (drawing CPMS) for proper connection points.**

**NOTE: Do not operate pump(s) dry. Damage to pump seal and shaft may occur.**

## Control Package (Ref: Drawing CPIO)

a) The control package is pre-wired at factory
b) Two sets of terminals, located in the control panel, are provided for pump control. Reference drawing CPMS for terminals.
c) Power for motorized valves is supplied from control panel terminal strip. (See Section 1.4 for instructions).
d) Fuse holders connected to output terminals 9 & 11 are intentionally left with no fuses. **Fuses should not be installed or removed unless specific instructions are received from AmeriWater 800.535.5585.**
   Output #9 will be fused, (if applicable), at start up to convert from city water to system water backwash.
e) Output #11 will be fused, (if applicable) to change timed backwash from 24 hours to 7 days. **Timed backwash should be changed only for systems operating on a closed loop and only after consultation with AmeriWater.**

**NOTE: Changes to these options without instructions from AmeriWater may void the filter warranty.**

## 1.6 Pipe Connections

**Recommended pipe size for all pipe connections are noted in schedule.**
(Ref: Drawing CW)

Connecting pipe should be of materials compatible in construction to filter manifold.
Dielectric fittings are highly recommended if dissimilar metals are used.

For pipe runs exceeding 20 feet from filter system consult AmeriWater for pipe size recommendations.

**The companion full-face flange to the suction side of the filter pump is to be provided by end-user or contractor.**

**Basket or Y strainer (with gauges before and after strainer) is recommended ahead of filter pump.**

Ref: Drawing CWT for typical installation.

**Properly secure all pipe runs with M & F clamps (or similar). Pipe movement may cause filter and / or pipe damage.**

## Supply and Return Lines

NOTE: Isolation valves are recommended convenient to filter.

a. Connect influent (supply) line from pre-selected point in cooling system to suction side of filter pump.

**NOTE: A foot valve / check valve should be installed on suction side of self-priming pump to prevent loss of pump prime.**

b. Connect effluent (return) line from the outlet connection to the pre-selected point in the cooling system (downstream of inlet connection).

**NOTE: Filter return must be connected to a point in the cooling system where cooling system pressure is equal to or less than pressure to filter pump suction.**

**NOTE: Filter supply and return lines should be connected to the cooling system where they are in an area of 'common' flow.**

## Backwash Supply

**NOTE: If filter is designed to use cooling system water for backwash, no backwash supply pipe is required in this section. (Skip to waste line section)**

**NOTE: Clean water supply is always recommended for closed loop filters.**

Backwash supply requires min / max 30/70 psig. An isolation valve is recommended, convenient to filter. Backflow preventer is recommended and commonly required by local codes when potable water is used for backwash. A pressure gauge is recommended at the discharge of the backflow preventer.

**NOTE: An efficient backflow preventer will create approximately 12 psig loss in line pressure. A minimum of 30 psig must be available at outlet side of backflow preventer. If backwash and cooling tower make up are connected to the same supply, be sure 30 psig is available when tower is calling for water.**

Connect properly sized backwash supply line to inlet side of backwash flow control device.

## Waste Line

**NOTE: Ensure drain is adequately sized and free flowing to handle backwash flow.**
A swing check valve is recommended for waste lines with a vertical lift. Check valve should be installed immediately after the filter waste line connection.
**Ball Type or Spring Type Checks Are <u>Not</u> Acceptable.**

For drainpipe runs exceeding 20 feet or an 8-foot lift from filter system, consult AmeriWater for pipe size recommendations.

Connect properly sized drain line to filter backwash drain.

## 1.7 Media Installation

**<u>WARNING! WARNING! WARNING!</u>**

**PROPER PROTECTIVE EQUIPMENT MUST BE WORN WHEN INSTALLING MEDIA. PERSONNEL HANDLING MEDIA MUST WEAR A DUST MASK OR RESPIRATOR FOR LUNG PROTECTION AND GOGGLES FOR EYE PROTECTION. REFER TO ENCLOSED MATERIAL SAFETY DATA SHEET (MSDS) FOR COMPLETE INFORMATION (Section 2).**

a) Media containers are labeled (Ref: ML). Separate containers according to vessel and order of addition. Before installing media, inspect media containers for loss during shipping. Notify

AmeriWater if media loss is suspected. All loses must be verified by authorized factory representative.

**NOTE: For multi-vessel systems be sure that each vessel has the same number of media containers per layer and same number of layers.**

b) b. Remove top filter vessel closure.

**NOTE: Fill vessel 1/3 full with water to cover under drain before adding media. This will help to level the media, expel air, and reduce dust exposure.**

c) c. Add media in the order as indicated on media container label. (Ref: ML)

**NOTE: To avoid displacement of water in multi vessel systems, follow this example. Example: Add layer #1 to all vessels, then add layer #2 to all vessels, and continue until all media has been added to all vessels. Level each layer before adding next layer.**

d) d. Fill vessel(s) to top with water.
e) e. Replace and secure vessel gasket and closure.

**NOTICE:**
**Contact AmeriWater at 800.855.5535 to arrange for factory authorized technician to do startup and training.**
**TWO WEEKS ADVANCE NOTICE IS REQUIRED.**
**START UP BY UNAUTHORIZED PERSON MAY VOID WARRANTY!**

**THE PARRY COMPANY**
**33630 Old US Route 35**
**Chillicothe, OH 45601**
**Ph: 740-884-4893**
**Fax: 740-884-4892**

# Material Safety Data Sheet

## I. PRODUCTION IDENTIFICATION

**Trade Name as Labeled:** Silica Gravel; 6x12 Mesh
**Chemical Name and Formula:** Silica, in the form of quartz; SiO2

## II. HAZARDOUS INGREDIENTS

**CAS Number**: 14808-60-7
**Chemical Name:** Quartz
**Percent:** >90

**ACGIH-TLV:** .05mg/m³ (Exposure limits are for respirable fraction or particles 10 microns or smaller)
**OSHA-PEL:** 10mg/m³ / %SiO2 +2

NIOSH recommends a Permissible Exposure Limit (PEL) of .05-mg/m³ respirable free silica. ACGIH-TLV and OSHA PEL are not interchangeable limit values.

The exposure limits are time-weighted average concentrations for an eight-hour workday and a 40-hour work week.

Crystalline silica exists in several forms, the most common of which is quartz. If crystalline silica (quartz) is heated to more than 870°C, it can change to a form of crystalline silica known as tydimite, and if crystalline silica (quartz) is heated to more than 1470°C, it can change to a form of crystalline known as cristobalite. The OSHA PEL for crystalline silica as trydimite and cristobalite is one-half of the OSHA PEL for crystalline silica (quartz).

## III. HAZARD IDENTIFICATION

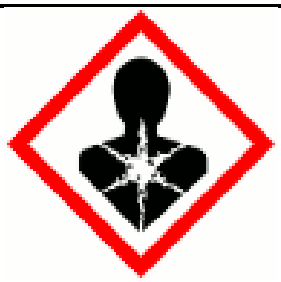

**Emergency Overview:** The crystalline silica produced by The Parry Company material is a white or tan, and is primarily used as water filter media. It is not flammable, combustible, or explosive. It does not cause burns or severe skin or eye irritation. A single exposure will not result in serious adverse health effects. Crystalline silica (quartz) is not known to be an environmental hazard. Crystalline silica (quartz) is incompatible with hydrofluoric acid, fluorine, chlorine trifluoride or oxygen difluoride.

**Potential Health Effects:**

**Silicosis:** Respirable crystalline silica (quartz) may cause silicosis, a fibrosis (scarring) of the lungs.

Silicosis may be progressive; it may lead to disability and death.

**Cancer:** Crystalline silica (quartz) inhaled from occupational sources is classified as carcinogenic to humans.

**Autoimmune Diseases:** There are some studies that show excess numbers of cases of scleroderma and other connective tissue disorders in workers exposed to respirable crystalline silica.

**Tuberculosis:** Silicosis increase the risk of tuberculosis.

**Nephrotoxicity**: There are some studies that show an increased incidence of chronic kidney disease and end-stage renal disease in workers exposed to respirable crystalline silica.

**Eye Contact:** Crystalline silica (quartz) may cause abrasion of the cornea.

**Skin Contact:** Not applicable

**Ingestion:** Not applicable

**Chronic Effects:** The adverse health effects-silicosis, cancer, autoimmune diseases, tuberculosis, and nephrotoxicity-are chronic effects.

**Signs and Symptoms of Exposure:** Generally, there are no signs or symptoms of exposure to crystalline silica (quartz).

**Medical Conditions Generally Aggravated by Exposure:** The condition of individuals with lung disease (e.g., bronchitis, emphysema, chronic obstructive pulmonary disease) can be aggravated by exposure. See section 11, Toxicological Information, for additional detail on potential adverse health effects.

## IV. FIRST AID MEASURES

**Symptoms of Overexposure:**

**Inhaled:** Shortness of breath, coughing, reduced pulmonary function. Prolonged inhalation of repsirable silica may result in permanent lung damage, silicosis. No specific first aid is necessary since the adverse health effects associated with exposure to crystalline silica (quartz) result from chronic exposures. If there is a gross inhalation of crystalline silica (quartz), remove the person immediately to fresh air, give artificial respiration as needed, seek medical attention as needed.

**Swallowed:** May cause gastrointestinal discomfort. Give one or two glasses of water. If discomfort persists, see a physician.

**First Aid:** Emergency procedures.

**Eye Contact:** Wash with water for at least fifteen (15) minutes. If irritation or redness persists see a physician.

**Skin Contact:** Wash with soap and water. If irritation persists see a physician.

**Ingestion:** Not applicable.

**Suspected Cancer Agent:** Yes **Federal OSHA:** No **NTP:** Yes **IARC:** Yes

**NTP:** Respirable crystalline silica has been listed in the Sixth Annual Report on Carcinogens.

**IARC:** Monographs on the Evaluation of the Carcinogenic Risk of Chemical to Humans (vol. 68, 1997) concludes that there is sufficient evidence in humans for the carcinogenicity of inhaled crystalline silica in the forms of quartz and cristobalite (Group 1) in certain industrial circumstances, but that carinogenicity may be dependent on inherent characteristics of the crystalline silica or on external factors affecting is biological activity or distribution of its polymorphs.

## V. FIRE FIGHTING MEASURES

Crystalline silica (quartz) is not flammable, combustible, or explosive.

## VI. ACCIDENTAL RELEASE MEASURES

**Spill Response Procedures (including employee protection measures):** Clean up using approved, dustless methods (water or vacuum) to minimize generation of respirable silica particles.

**Waste Disposal:** Dispose of in a facility approved for silica (also see Section 13).

## VII. HANDLING AND STORAGE

**Ventilation and Engineering Controls:** Local mechanical to reduce respirable silica to below safe levels.
**Respiratory Protection (Type):** Use NIOSH approved equipment. Positive pressure supplied air-type recommended. Appropriate respiratory protection for respirable particulates is based on consideration of air borne workplace concentrations and duration of exposure arising from the intended end use. Please refer to the most recent standards of ANSI (Z88.2), OSHA (29CFR 1910.134), MSHA (30 CFR Parts 56 & 57), and NIOSH RDL. IF you are unsure as to the type of respirator to be used please consult your employer.
**Eye Protection (Type):** Safety Glasses
**Gloves (Specify Material):** Not normally required.
**Other Protective Clothing and Equipment:** Not normally required.
**Work Practices, Hygiene Practices:** Clean up spills promptly. Do not engage in activities that will generate respirable silica particles.
**Other handling and Storage Requirements:** Avoid generating dust. There are no special storage requirements. Train all exposed persons in all sections of this MSDS and the proper handling of silica before they work with this product.

See OSHA Hazard Communication Rule CFR 1910.1200, 1915.99, 1917.28 and 1928.21, state, local worker, or community "Right to Know" laws and regulations. We recommend that smoking be prohibited in all areas where respirators must be used. Warn your employees (and your customer users in case of resale) by posting and other means of the hazard and OSHA precautions to be used. Provide training about the OSHA precautions. See control measures in Section 8.

## VIII. EXPOSURE CONTROL/PERSONAL PROTECTION

Local Exhaust: Use sufficient local exhaust to reduce the level of respirable crystalline silica to below the PEL. See ACGIH "Industrial Ventilation, A Manual of Recommended Practice" (latest edition).
Respiratory Protection: The following chart specifies the types of respirators, which may provide respiratory protection for crystalline silica:

| PARTICULATE CONCENTRATION | MINIMUM RESPIRATORY PROTECTION* |
|---|---|
| **10 x PEL or Less** | Any particulate respirator, except single-use or quarter-mask respirator.<br>Any fume respirator or high efficiency particulate filter respirator.<br>Any supplied-air respirator.<br>Any self-contained breathing apparatus. |
| **50 x PEL or Less** | A high efficiency particulate filter with a full-face piece.<br>Any supplied-air respirator with a full-face piece, helmet, or hood.<br>Any self-contained breathing apparatus with a full-face mask. |
| **500 x PEL or Less** | A type C supplied-air respirator operated in pressure-demand or other positive pressure or continuous-flow made. |
| **Greater than 500 x PEL or Entry and Escape from Unknown Concentrations** | Self-contained breathing apparatus with a full-face piece operated in pressure-demand mode. A combination respirator which includes a Type C supplied-air respirator with a full-face piece operated in pressure-demand or other positive pressure continuous-flow mode and an auxiliary self-contained breathing apparatus operated in pressure-demand or other positive pressure mode. |

**Use only NIOSH-approved or MSHA-approved equipment. See 29 CFR § 1910.134 and 42 CFR § 84. See also ANSI standard Z88.2 (latest revision) "American National Standard for Respiratory Protection."**

**Exposure Guidelines:**

| Component | CAS No. | Percentage (by wt.) | OSHA (TWA) | OSHA (STEL) | ACGIH (TWA) | ACGIH (STEL) | NIOSH (TWA) | NIOSH (STEL) | Unit |
|---|---|---|---|---|---|---|---|---|---|
| Crystalline Silica (Quartz) | 14808 -60-7 | 99.0-99.9 | $\frac{10}{\% SiO2 + 2}$ | None | .05 | None | .05 | None | Mg/m³ |

## IX. PHYSICAL AND CHEMICAL PROPERTIES

**Vapor Density:** Not applicable
**Specific Gravity:** 2.65
**Solubility in Water:** Insoluble
**Vapor Pressure:** 10mm @ 1730°C
**Melting Point:** 1710°C
**Boiling Point:** 2230°C
**Evaporation Rate:** None
**Appearance and Color:** White to tan; odorless

## X. STABILITY AND REACTIVITY

**Stability:** Stable
**Hazardous Polymerization:** Will not occur
**Incompatibility (materials to avoid):** Contact with powerful oxidizing agents such as fluorine, chlorine trifluoride, manganese trioxide, oxygen difluoride.
**Hazardous Decomposition Products:** Silica will dissolve in hydrofluoric acid and produce a corrosive gas (silicon tetrafluoride).

## XI. TOXICOLOGICAL INFORMATION

**Silicosis**: The major concern is silicosis, caused by inhalation and retention of respirable crystalline silica dust. Silicosis can exist in several forms, chronic (or ordinary), accelerated, or acute.

**Chronic or Ordinary Silicosis (often referred to as Simple Silicosis)** is the most common form of silicosis, and can occur after many years of exposure to relatively low levels of airborne respirable crystalline silica dust. It is further defined as either simple or complicated silicosis. Lung lesions (shown as radiographic opacities) less than 1 centimeter in diameter characterize simple silicosis, primarily in the upper lung zones. Often, simple silicosis is not associated with symptoms, detectable changed in lung function or disability. Simple silicosis may be progressive and may develop into complicated silicosis or progressive massive fibrosis (PMF). Complicated silicosis or PMF is characterized by lung lesions (shown as radiographic opacities) greater than 1 centimeter in diameter. Although there may be no symptoms associated with complicated silicosis or PMF, the symptoms, if present, are shortness of breath, wheezing, cough and sputum production. Complicated silicosis or PMF may lead to death. Advanced complicated silicosis or PMF can result in heart disease secondary to the lung disease (cor pumonale).

**Accelerated Silicosis** can occur with exposure to high concentrations of respirable crystalline silica over a relatively short period; the lung lesions can appear within five (5) years of the initial exposure. The progression can be rapid. Accelerated silicosis is similar to chronic or ordinary silicosis, except that the lung lesions appear earlier and the progression is more rapid.

**Acute Silicosis** can occur with exposures to very high concentrations of respirable crystalline silica over a very short period of time, sometimes as short as a few months. The symptoms of acute silicosis include progressive shortness of breath, fever, cough and weight loss. Acute silicosis can be fatal.

**Cancer:**

**IARC:** The International Agency of Research on Cancer (IARC) concluded that there was "sufficient evidence in humans for the carcinogenicity of crystalline silica in the forms of quartz and cristobalite from occupational sources", and that there is "*sufficient evidence* in experimental animals for the carcinogenicity of quartz and cristobalite." The overall IARC evaluation was that "crystalline silica inhaled in the form of quartz or

cristobalite from occupational sources is *carcinogenic to humans (Group 1)*." The IARC evaluation noted that "carcinogenicity was not detected in all industrial circumstances studies. Carcinogenicity may be dependent on inherent characteristics of the crystalline silica or on external factors affecting its biological activity or distribution of it polymorphs." For further information on the IARC evaluation, see IARC Monographs on the Evaluation of Carcinogenic Risks to Humans, Volume 68, "Silica, Some Silicates…" (1997).

**NTP:** The National Toxicology Program, in its Ninth Annual Report on Carcinogens, classified "silica, crystalline (respirable)" as a known human carcinogen.

**OSHA:** Crystalline silica (quartz) is not regulated by the US Occupational Safety and Health Administration as a carcinogen.

There have been many articles published on the carcinogenicity of crystalline silica, which the reader should consult for additional information. The following are examples of recently published articles:

"Crystalline Silica and Lung Cancer: The Problem of Conflicting Evidence", Indoor Built Environ, Volume 8, pp.121-126 (1998);

Crystalline Silica and the Risk of Lung Cancer on the Potteries", Occup. Environ. Med., Volume 55, pp.779-785 (1998);

Is Silicosis Required for Silica-Associated Lung Cancer?" American Journal of Industrial Medicine, Volume 37, pp. 252-259 (2000);

Silica, Silicosis, and Lung Cancer: A Risk Assessment", American Journal of Industrial Medicine, Volume 38, pp. 8-18 (2000);

Silica, Silicosis, and Lung Cancer: A Response to a Recent Working Group Report", Journal of Occupational and Environmental Medicine, Volume 42, pp. 704-720 (2000).

**Autoimmune Diseases:** There is evidence that exposure to respirable crystalline silica (without silicosis) or that the disease silicosis is associated with the increased incidence of several autoimmune disorders, --scleroderma, systemic lupus erythematosus, rheumatoid arthritis and diseases affecting the kidneys. For a review of the subject, the following may be consulted:

Occupational Exposure to Crystalline Silica and Autoimmune Disease", Environmental Health Prospectives Volume 107, Supplement 5, pp. 793-802 (1999);

Occupational Scleroderma", Current Opinion in Rheumatology, Volume 11, pp. 490-494 (1999).

**Tuberculosis:** Individuals with silicosis are at increased risk to develop pulmonary tuberculosis, if exposed to persons with tuberculosis. The following may be consulted for further information:

Occupational Lung Disorders, Third Edition, Chapter 12, entitled "Silicosis and Related Diseases", Parkes, w. Raymond (1994);

Risk of pulmonary tuberculosis relative to silicosis and exposure to silica dust in South African gold miners," Occup. Environ. Med., Volume 55, pp. 496-502 (1998).

**Kidney Disease:** There is evidence that exposure to respirable crystalline silica (without silicosis) or that the disease silicosis is associated with the increased incidence of kidney diseases, including end stage renal disease. For additional information on the subject, the following may be consulted:

"Kidney Disease and Silicosis", Nephron, Volume 85, pp. 14-19 (2000).

## XII. ECOLOGICAL INFORMATION

Crystalline silica (quartz) is not known to be ecotoxic; i.e., there is no data that suggests that crystalline silica (quartz) is toxic to birds, fish, invertebrates, microorganisms or plants. For additional information on crystalline silica (quartz), see Sections 9 (physical and chemical properties) and 10 (stability and reactivity) of this MSDS.

## XIII. DISPOSAL CONSIDERATIONS

**General:** The packaging and material may be land filled; however, material should be covered to minimize generation of airborne dust.
**RCRA:** Crystalline silica (quartz) is not classified as a hazardous waste under the Resource Conservation and Recovery Act, or its regulations, 40 CFR §261 et. seq.

The above applies to materials as sold by Fairmount Minerals, LTD. The material may be contaminated during use, and it is the responsibility of the user to assess the appropriate disposal of the used material.

## XIV. TRANSPORT INFORMATION

Crystalline silica (quartz) is not a hazardous material for purposes of transportation under the US Department of Transportation Table of Hazardous Materials, 49 CFR §172.101.

## XV. REGULATORY INFORMATION

**United States (Federal and State):**

**TSCA No:** Crystalline silica (quartz) appears on the EPA TSCA inventory under the CAS No. 14804-60-7.
**RCRA:** Crystalline silica (quartz) is not classified as hazardous waste under the Resource Conservation and Recovery Act, or its regulations, 40 CFR §261 et seq
**CERCLA:** Crystalline silica (quartz) is not classified as a hazardous substance under regulations of the Comprehensive Environmental Response Compensation and Liability Act (CERCLA), 40 CFR §302.
**Emergency Planning and Community Right to Know Act:** Crystalline silica (quartz) is not an extremely hazardous substance under Section 302 and is not a toxic chemical subject to the requirements of Section 313.
**Clean Air Act:** Crystalline silica (quartz) mines and processed by Fairmount Minerals, Ltd. was not processed with or does not contain any Class I or Class II ozone depleting substances.
**FDA:** Silica is included in the list of substances that may be included in coatings used in food contact surfaces, 21 CFR §175.300 (b) (3) (xxvi).
**NTP:** Respirable crystalline silica (quartz) is classified as a carcinogen.
**OSHA Carcinogen:** Crystalline silica (quartz) is not listed.
**California Proposition 65:** Crystalline silica (quartz) is classified as a substance known to the State of California to be a carcinogen.

**Canada:**

**Domestic Substances List:** Fairmount Minerals, Ltd's products, as naturally occurring substances, are on the Canadian DSL.
**WHMIS Classification:** D2A

**Other:**

**EINECS No:** 238-878-4
**EEC Label (Risk/Safety Phrases): R** 48/20, R 40/20, S22, S38
**IARC:** Crystalline silica (quartz) is classified in IARC Group I.
National, state, provincial or local emergency planning, community right-to-know or other laws, regulations or ordinances may be applicable—consult applicable national, state, provincial, or local laws.

## XVI. OTHER INFORMATION

**H.M.I.S. Rating:**

| | | | |
|---|---|---|---|
| Health Hazard Rating | 1* | Flammability Hazard Rating | 0 |
| Reactivity Hazard Rating | 0 | Personal Protective Equipment | E** |

**DOT**: Not Regulated
**SARA Title III**: Not listed.

*Chronic exposure to respirable size silica will result in silicosis. **Comply with special OSHA respiratory protection if sandblasting.

## XVII. ACRONYM LIST

**CAS:** Chemical Abstract System
**ACGIH:** American Conference of Governmental Industrial Hygienists
**OSHA:** Occupational Safety and Health Administration
**PEL:** Permissible Exposure Limit
**TLV:** Threshold Limit Value
**NIOSH:** National Institute of Occupational Safety and Health
**NTP:** National Toxicology Program
**IARC:** International Agency of Research on Cancer
**ANSI:** American National Standards Institute
**MSHA:** Mine Safety Health Administration
**RDL:** Respiratory Decision Logic
**TWA:** Time Weighted Average
**STEL:** Short Term Exposure Limit
**RCRA:** Resource Conservation and Recovery Act
**TSCA:** Toxic Substance Control Act
**CERCLA:** Comprehensive Enviro Response Compensation and Liability Act
**FDA:** Food and Drug Administration
**WHMIS:** Workplace Hazardous Materials Information System
**EINECS:** European Inventory of Existing Commercial Substances
**EEC:** European Economic Community
**HMIS:** Hazardous Materials Information System
**DOT:** Department of Transportation
**SARA:** Superfund Amendments and Reauthorization Act

## 2.2 Installation Check List

_____ All flange bolts and unions tightened.

_____ Media installed. (Sec 1.7)

_____ Vessel caps installed and secured.

_____ All recommended components installed per Typical Installation Sketch. (Drawing CWT)

_____ Filter effluent (return) line connected to cooling system at point where

pressure is equal to or lower than filter influent (supply) line.

_____ All pipes properly secured to avoid movement.

_____ Valve control wiring connected. (Sec 1.4)

_____ Power to control panel disconnect from dedicated supply w/ correct voltage (Sec 1.5)

_____ Pump(s) wired from motor starter(s). (Sec 1.5)

_____ Pump(s) rotation correct.

_____ Backwash supply connected. (Sec 1.6)

_____ Drain connected. (Sec 1.6)

## 2.3 Request for Startup

# Request for Startup

**Please complete this form and return via fax to schedule startup date.**
**2 Weeks advance notice is required for startup.**
AmeriWater Fax: 937.461.1988
**Please have a factory authorized technician contact me to arrange startup for the AmeriWater Sand Filter System.**

**System location:** _____

**Note:** All items listed below must be complete before startup personnel arrive. Should installation not be complete, additional charges may be incurred, including but not limited to, additional labor hours, travel expenses, and materials provided for startup.

_____ All flange bolts and unions tightened.

_____ Media installed.

_____ Vessel caps installed and secured.

_____ Isolation valves, check valves, and pump strainer installed.

_____ Filter effluent (return) line connected to cooling system at point where pressure is equal to or lower than filter influent (supply) line.

_____ All pipes properly secured to avoid movement.

_____ Valve control wiring connected.

_____ Power connected to panel.

_____ Pump(s) wired from motor starter(s).

_____ Pump(s) rotation correct.

_____ Control panel wired with dedicated power supply of correct supply.

_____ Backwash supply connected.

_____ Drain connected.

Authorized Signature:_____ Date:_____

Printed Name:_____ Phone #:_____

## 2.4 Startup Data Sheet

# STARTUP Data
# AmeriWater Filter System

AmeriWater
The Water Purification Specialists
3345 Stop 8 Rd., Dayton, OH 45414
800-855-5535 Fax 937-461-1988

**To Be Completed by Factory Authorized Representative at Start up**

| | | |
|---|---|---|
| Customer: | | Start up date: |
| Address: | | |
| | | |
| | | |
| Contact : | | |
| Tel/Fax/Email | | |

**Filter Data:**

Model #:

Serial #:

Pump Model:

Pump Serial #:

Motor HP:

Valves:

**Connection**

**Data:** Electrical: Control Power: _____ Pump Power: _____

M,S, D, Xfmr by: AmeriWater _____ Brand _____ Heater Setting _____ Others _____

PLC Brand _____

System Water: PSI to Pump _____ Suction PSI to _____ Cooling System

PSI across filter after backwash: In _____ Out _____

Backwash Supply: Potable _____ System _____ Other _____

Pressure _____

Backwash Count: _____

**Notes:**

Tech: Customer:

## 2.5 Filter Log Sheet

**Company:**
**Filter Model:**
**Serial Number:**
**Start up Date:**

AmeriWater
The Water Purification Specialists
3345 Stop 8 Rd., Dayton, OH 45414
800-855-5535 Fax 937-461-1988

### AmeriWater Filter Log Sheet

| Date | Pressure In | Pressure Out | Backwash Count | Nbr of Backwashes | Notes |
|---|---|---|---|---|---|
| | | | | | |
| | | | | | |
| | | | | | |
| | | | | | |
| | | | | | |
| | | | | | |
| | | | | | |
| | | | | | |
| | | | | | |
| | | | | | |
| | | | | | |
| | | | | | |
| | | | | | |
| | | | | | |
| | | | | | |
| | | | | | |
| | | | | | |
| | | | | | |
| | | | | | |
| | | | | | |
| | | | | | |
| | | | | | |
| | | | | | |
| | | | | | |
| | | | | | |
| | | | | | |
| | | | | | |
| | | | | | |
| | | | | | |
| | | | | | |
| | | | | | |
| | | | | | |
| | | | | | |

## 2.6 AmeriWater Warranty

AmeriWater warrants the Product to be free from defects in materials and workmanship. The warranty period shall not exceed (a) twelve (12) months from the date of startup (b) eighteen (18) months from the date of shipment, whichever occurs first. AmeriWater's obligation under this warranty is limited to repair or replacement of any part or parts found to be defective. AmeriWater shall not be required to incur expenses for labor outside of the place(s) of business of AmeriWater, nor travel expenses to fulfill its obligations hereunder. AmeriWater neither assumes nor authorizes any person to assume for it, any other liability in connection with the sale of Products.

This warranty shall not apply to any Product that has been subjected to abuse, misuse, alteration, neglect, or accident, nor to any Product that has been damaged as a result of any unusual force of nature such as flood, hurricane, tornado, or earthquake. All implied warranties, including any implied warranty of merchantability or of fitness for a particular purpose are disclaimed to the extent they extend beyond the above periods.

# 3 Operation

**Note: Initial Startup must be performed by an Authorized Factory Technician.**

## 3.1 Seasonal Startup

### Media

a) Check all bolts and fittings for tightness. Initiate filter backwash.

**Note: Stop backwash cycle before last vessel has completed cycle (about 4 minutes into last vessel backwash) by de-energizing system at service disconnect on control panel.**

**Perform the following steps with the filter system isolation valves closed and power to service disconnect secured.**

b) Start to drain filter system through lower manifold drain valve. **Note: Check filter gauges to ensure pressure is reading zero before proceeding to next step.**

c) Remove filter vessel cover. Inspect cover and cover gasket, replace if necessary.

d) **Note: Drain water to top of sand then close drain.** Inspect filter media**.** Sand should appear clean and loose. Manually remove any debris from top of sand.

e) Level of sand in the filter vessel should be approximately 7.5" – 8.5” from bottom of filter inlet. If media level is below normal or appears other than loose sand, contact AmeriWater 800.855.5535.

**Note: Media may appear colored. This condition is common and usually due to the presence of iron oxide or organics in the system water.**

f) If sand is at normal operating level and clean, refill vessel with water.

g) Replace filter access cover gasket and cover, and secure cover bolts.

**Pump**

a. Remove basket strainer or 'Y' strainer cover (if applicable).

b. Inspect cover gasket. Replace or lubricate as needed and reinstall.

c. Remove and clean strainer basket.

d. Replace basket and secure cover(s).

e. Lubricate pump motor and pump shaft (if required).

f. Turn pump by hand, if possible, to ensure ease of movement.

**Manifolds**

a. Open isolation valves and check for leaks in fittings and pipe before energizing filter system.

**System Automation**

a. Energize control system.

b. Engage manual backwash by depressing and holding manual backwash button (Ref: **Drawing CP**) until backwash light illuminates (approx. 20 seconds).

c. Allow system to backwash for full cycle. After last vessel backwashes allow system to return to filter mode.

d. Pressure differential should now be close to that indicated on startup data sheet (typically 8 – 12 PSI).

e. Check voltage and amperage on pump motor leads. Current /amp draw should not exceed rating on motor nameplate.

f. Check system for unusual noise or vibration. **Contact AmeriWater 800.535.5585 if any unusual conditions are noted.**

## 3.2 Seasonal Shutdown

If the filter system will be shut down for a prolonged period of time (over 1 week), the following procedures should be performed:

a. Backwash the system to remove debris from media.

b. Isolate and secure the filter system.

c. Drain system from system drain (Ref: **Drawing CW**) and leave drain open.

d. Open filter vessels and inspect media. Clean or replace as necessary.

g. Replace filter access cover gasket and cap. Leave bolts loose.

## 3.3 Freeze Protection

If filter is to be installed in an area where freezing is likely, all wetted surfaces should be heat traced and insulated to protect equipment from freezing. Follow shutdown procedures to reduce the likelihood of damage during winter shutdown periods.

## SEQUENCE OF OPERATION

**This section describes the operation of standard High Efficiency Filter Systems as they are shipped from the factory. It is intended to be an aid to understanding the general operation of the unit for the equipment operator and should not be considered a technical reference.**

### Modes of operation

There are two modes of operation for the CW Series.

Service mode – Incoming water is pumped into the top of the filter tank(s), through the filtering media, out the bottom of the tank(s) and returned to the cooling system.

Backwash mode – This is the CW Series self-cleaning mode. Water is directed to enter the bottom of the tank at a controlled flow rate. The media bed is lifted and separated loosening the trapped particles. The water exits the top of the tank carrying away the previously filtered particulates to the drain.

### Start-up

When power is applied to the CW Series filter, the filter cycle valves will advance to the service mode. In service mode, all service valves (1&2) will be open and all backwash valves (3&4) will close. The filter pump will be disabled for a period of 60 seconds to allow the cycle valves to move into proper position.

Applying power to the control box also starts a timing mechanism that initiates automatic backwash cycles at predetermined intervals.

### Initiating the backwash cycle

There are three ways to initiate the backwash cycle.

Automatic – The PLC has a built-in timer that is designed to initiate a backwash cycle every 24 hours.

On-demand – A differential pressure gauge monitors the input and output water pressures and sends a signal to the PLC to start a backwash when the difference between inlet and outlet water pressure reaches the preset threshold. This feature is also automatic.

Manual – The backwash cycle can be initiated manually at any time by pressing and holding the “manual backwash” pushbutton on the front of the control box, for a period of 20 seconds. Once initiated, the backwash cycle will commence without operator assistance.

**Backwash sequence of operations**

Once a backwash has been initiated by any of the above methods, the sequence of events that follows will always be the same. The sequence is as follows:

1) If a filter is using city water for backwash, the pump goes off. If the filter uses system water for backwash, the pump will be deactivated until the cycle valves turn , and the pump is reactivated.

2) On single and multiple tank filters, all service valves (1&2) close at the same time. Event time is 60 seconds.

3) Tank #1 backwash indicator light is illuminated.

4) Tank #1 backwash valves (3&4) open. Backwash duration is 5 minutes.

5) When Tank #1 backwash is complete the indicator light is extinguished.

6) Backwash valves (3&4) close.

7) Steps 3 through 7 are repeated for each additional tank for multi-tank systems.

8) After all tanks have been backwashed, all service valves open. Event time is 60 seconds.

9) The pump returns to run mode and the CW Series Filter returns to service mode.

**Aborting the backwash**

In certain situations, it may be desirable to abort a backwash. A backwash in progress can be aborted by pressing and holding the “manual backwash” pushbutton for a period of 10 seconds.

**NOTE: If the backwash is being initiated by demand from the differential pressure switch, the backwash will be delayed only briefly. Demand for a backwash will continue until the differential pressure is brought below the preset threshold.**

**Automatic backwash timer**

The backwash timer will automatically initiate a backwash at pre-determined intervals. The standard interval is every 24 hours. This can be changed to a 7-day interval by installing a fuse in the fuse holder labeled 7 for closed loop systems. Consult your AmeriWater representative for information.

**Setting the automatic timer**

The 24 hour or 7 day automatic backwash timer can be reset to zero by pressing and releasing the “manual backwash” pushbutton on the control box 5 times within a 5 second interval. All backwash indicator lights will flash twice to confirm the change. Thereafter, the CW Series will backwash 24 hours or 7 days from the time you reset the timer, unless a manual or on demand backwash is initiated.

Note: In the event that electrical power is removed from the control box, the timer cannot continue counting but will maintain the count it held when power was lost and continue counting when power is restored. The backwash schedule will be delayed by the amount of time the power was off. If the backwash time is important, the timer will need to be reset to bring it back on schedule. See above paragraph for timer resetting instructions.

**System Backwash Pump Enable**

The CW Series is a pressurized filter system designed to operate at a specific water flow rate. To achieve the specified flow rate, a pump is integrated into the CW Series . Normally, this pump runs continuously whenever the system is in service mode and is turned off during backwash. Optionally, the controls can be set up to operate the pump during backwash, as described in the backwash sequence of operations (Step 1). This is accomplished by installing a fuse at the appropriate location in the control box labeled P. Consult your AmeriWater representative for information. To disable (turn off) the pump for maintenance, etc., rotate the pump selector switch on the control box to the "off" position. This will disable the pump in all modes of operation.

**External interface options**

Inputs

1) Remote Pump Disable to turn off the pump remotely from external source, i.e. BMS (Building Management System). Signal is sent from external source to filter PLC controller to disable pump.

2) Backwash Interlock input - locks out initiation of a backwash cycle in a multiple paired system. When one system is in backwash, all other paired units in a multi system are locked out of going into a backwash cycle until the previous system finishes the backwash cycle.

3) Backwash/Storage Tank Abort – Utilized for filter systems using a backwash storage tank. An input signal is sent from the float switch in the storage tank to the system to abort the backwash cycle in the event the storage tank is approaching an overflow condition. Once aborted, the filter system will return to normal service mode. Once the storage tank drains to a sufficient level; the abort signal is reset to allow the filter to backwash.

Outputs

1) Dry contact connection activated when unit is in backwash.

2) Backwash Counter contact to read the number of backwash cycles the filter system has cycled through.

3) Pump On contact to alert external monitors, when pump is operational.

4) Dry contact to other paired units for Backwash Interlock to prevent more than one system from backwashing at same time.

5) Dry contact to signal external monitors in the event that a pump overload is present.

6) 120 volt powered contact when filter is in backwash.

**Electrical Component Description**

1) Power Disconnect Switch – Main power supply to filter ON/OFF switch.

2) Pump On Indicator Light – Illuminated when filter pump is ON.

3) System Power On Indicator Light – Illuminated when disconnect switch is in the on position and power is to the filter.

4) Backwash Indicator Light – Illuminated when filter is in backwash. Light indicates which specific vessel is in backwash on a multiple tank system.

5) Pump Control Switch – Manual switch to deactivate the filter pump.

6) Manual Backwash Start Button – Manually initiates a backwash when pressed and held for approximately 20 seconds.

7) Backwash Cycle Counter - Totalizes the number of times the filter has backwashed.

8) Differential Pressure Switch – Monitors the operating differential pressure of the filter and initiates a backwash at 18 PSID.

**Fuse and Input/Output Terminal Description**

9) FU1 – Main 2 Amp fuse for PLC power

10) FU2 – Main 2 Amp fuse for the control panel power.

11) (P) – Installing the fuse enables the filter pump to run during backwash. Primarily used for system water backwash.

12) (7) – Installing fuse changes frequency of backwash from every 24 hours to every 7 days. (Closed loop systems only)

13) (15) – Installing fuse resets the duration of backwash from 5 minutes to 15 minutes (Just for initial startup).

14) Terminal 1 & 16 (Single Tank) – Input (dry contact) to disable the filter pump.
Terminal 1 &19 (Dual Tank)
Terminal 1 & 20 (Three Tank)
Terminal 1 & 22 (Four Tank)

15) Terminal 1 & 17 – "Backwash interlock input" is an input (dry contact) from the second filter system "filter lockout output" terminals 20 & 21 to prevent both units backwashing at the same time.

16) Terminal 20 & 21 – “Filter Lockout Output” is an output (dry contact) to first filter system “Backwash Interlock Input” terminals 1 &17 to prevent system from backwashing at the same time.

17) Terminal 2 & 24 – Wet Contact – 120V output when filter is in backwash. Deactivated when filter is in service.

18) Terminal 1 & 18 – “Storage Tank Abort Input” - Dry contact input from backwash storage tank. When activated aborts the backwash and returns the filter to service.

19) Terminals 22 & 23 – Dry Contact – Dry contact output when unit is in backwash.

20) Memory Module – Provides a read only status of the PLC

TERMINALS DESCRIBED IN ITEMS NUMBERED 14 THRU 19 WILL BE DIFFERENT.
TERMINAL NUMBERS ON MULTIPLE TANK SYSTEMS REFERENCE THE LADDER DIAGRAM.

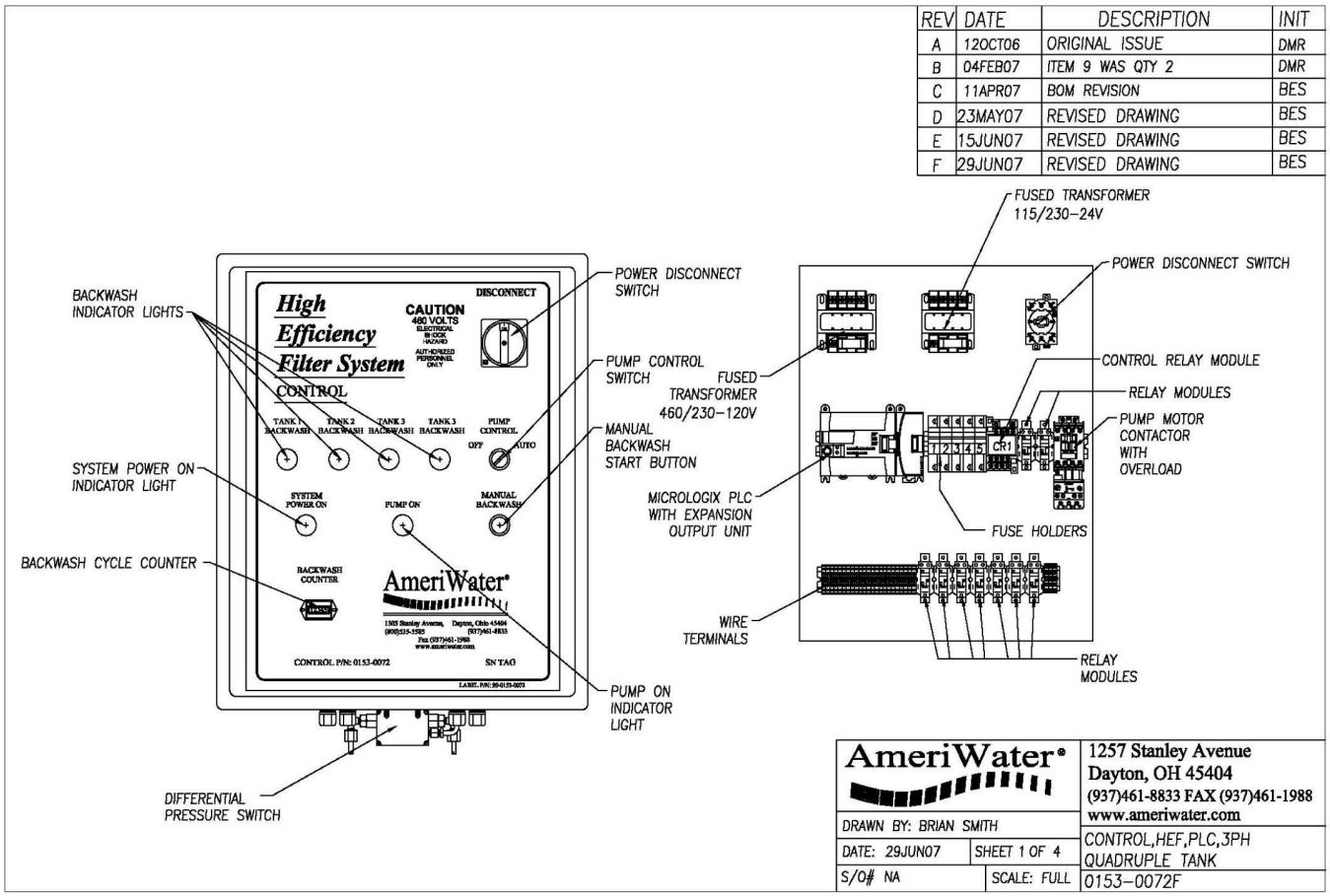

| REV | DATE | DESCRIPTION | INIT |
|---|---|---|---|
| A | 06NOV06 | ORIGINAL ISSUE | CEY |
| B | 01NOV06 | PARTS REVISION | BES |
| C | 11MAY07 | DRAWING REVISION | BES |
| D | 23MAY07 | DRAWING REVISION | BES |
| E | 15JUN07 | DRAWING REVISION | BES |
| F | 15JUN07 | DRAWING REVISION | BES |

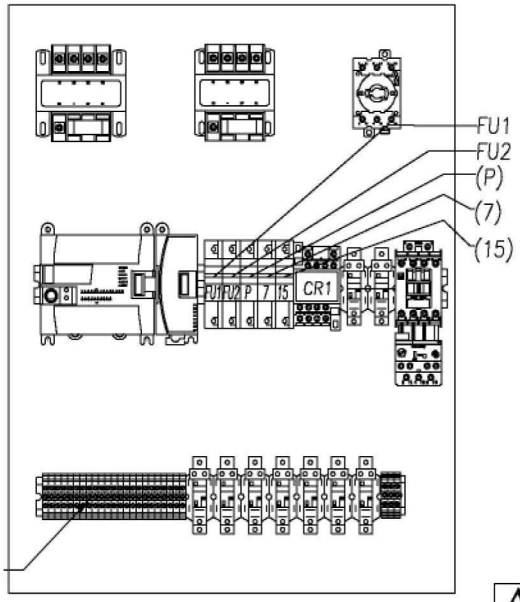


(14) THRU (19)WIRE TERMINALS REFERENCE THE LADDER DIAGRAM.

AmeriWater®

1257 Stanley Avenue
Dayton, OH 45404
(937)461-8833 FAX (937)461-1988
www.ameriwater.com

| | | |
|---|---|---|
| DRAWN BY: BRIAN SMITH | | CONTROL,HEF,PLC,3PH QUAD TANK |
| DATE: 23MAY07 | SHEET 2 OF 2 | |
| S/O# NA | SCALE: FULL | 0153-0072F |

# 4 Maintenance

## 4.1 Maintenance Schedule

**AmeriWater** High Efficiency Filter Systems are designed for low maintenance. The following maintenance procedures are **minimum** frequency and will help to ensure continued trouble free operation. **Refer to component cut sheets for maintenance instructions specific to your equipment.**

**Note: Keep daily record of pressures, backwash count, performed maintenance and unusual occurrences on log sheet provided. The system log provides valuable information should factory service assistance be required. Contact AmeriWater 800.855.5535 if log sheets are needed.**

**Weekly:**
Check automatic pump oilers (if applicable)
Check pump strainer and clean as necessary

**Monthly:**
Grease pump motors (if applicable)

**Quarterly:**
Check all control functions

**Annual:**
Check pressure differential switch for proper operation
Inspect pump and pump motor for bearing wear
Inspect pump for seal wear
Inspect media. Clean, add, or replace as necessary.

**Note: Expected wear life for pump seal is approximately 2 years.**
**This may vary due to site specific operating conditions.**

## 4.2 Control Functions

a) Actuate manual backwash by depressing and holding manual backwash button until backwash light illuminates.

b) Watch system through backwash cycle for smooth valve actuation and water flow.

c) Differential pressure should be 6-12 psig when system returns to filter mode.
**See start up data sheet for pressure.**

**a.3 Media (level & condition)**

a) Backwash filter (De-energize control panel before last vessel is finished backwashing).

b) Isolate filter system from all water sources.

c) Open bottom filter drain (Ensure that pressure drops to zero).

d) Remove vessel cap and gasket.

e) Drain water to top of media then close drain.

f) Inspect sand. Sand should be loose and clean. Some discoloration is normal in systems with iron oxide or organic particles. Remove any loose debris or small amount of accumulated cake.

g) Push a broomstick or other rod into sand. Rod should penetrate media with relative ease until gravel is contacted.

h) Top of sand should be approximately 7.5" - 8.5" below bottom of inlet manifold.

i) Add or replace sand as necessary.

j) Refill vessel(s) with water.

k) Replace vessel cap gasket and secure cap.

l) Open all water supply valves and energize power supply.

m) Return system to service with manual backwash.

## 4.4 Pump Service

**Follow instructions contained in pump manufacturers cut sheets.**

| Symptom | Possible Cause | Remedy |
|---|---|---|
| | | |
| Water Running to Waste During Filter Cycle | Valve Failure | Rebuild valves |
| | Valve Failed Open | Check valve position indicators |
| | Normal Pump Discharge | 5 Gallons/Hour water lubricated pump |
| | | (Packed pump seals only) |
| | System in Backwash | Normal operation |
| Filter Pump Not Operating | Filter in Backwash Mode | Normal operation |
| | Pump Starter Tripped | Reset starter |
| | Pump Fuse Blown | Replace fuse |
| | Service Disconnect or Pump Switch Off | Switch to on position |
| | Micro Switch Failure | Consult factory representative |
| Pump Seal Leaks | Normal Wear | Replace pump seal |
| | Abrasive Material Entering Seal | Check pump strainer |
| | Excessive Pressure on Pump Discharge | Open all valves |
| | Excessive Pressure to Pump Suction | Check pressure to pump against rating |
| | Water Lubricated Seal | Normal 5 gallons per hour |
| Symptom Does Not Backwash | Control Power Failure | Energize control panel |
| | Blown Control Panel Fuse | Replace fuse |
| | Differential Switch Failure | Consult factory representative |
| Improper Control Sequencing | Low Voltage to Panel | Check power supply |
| | | Consult factory representative |
| Fuses Blowing | High Voltage to Panel | Check power supply |
| | Short Circuit | Check wiring |
| | Wrong size fuse | Check fuse rating |
| Premature Media Failure | Bacteria Loading | Consult factory representative |
| | Overloading of Contaminant | Consult factory representative |
| | Air Entering System Causing | Check for air in system and backwash |
| | Media Disruption | Lines |
| | System Not Backwashing Properly | Check backwash control function and water pressure |
| System Piping Unusually Warm | Filter Discharge to Dead Head | Open all valves |
| | | Check automatic valve functions |
| | | Check for proper system installation |
| | Media Plugged | See media failure |
| If recommended remedy fails, contact AmeriWater 800.585.5535 for further information. | | |

| REV | DATE | ECR | DESCRIPTION | INIT |
|---|---|---|---|---|
| A | 02JUL18 | | ORIGINAL ISSUE | ARC |
| B | 24OCT18 | | ADDED PRESSURE GAUGE | SB |

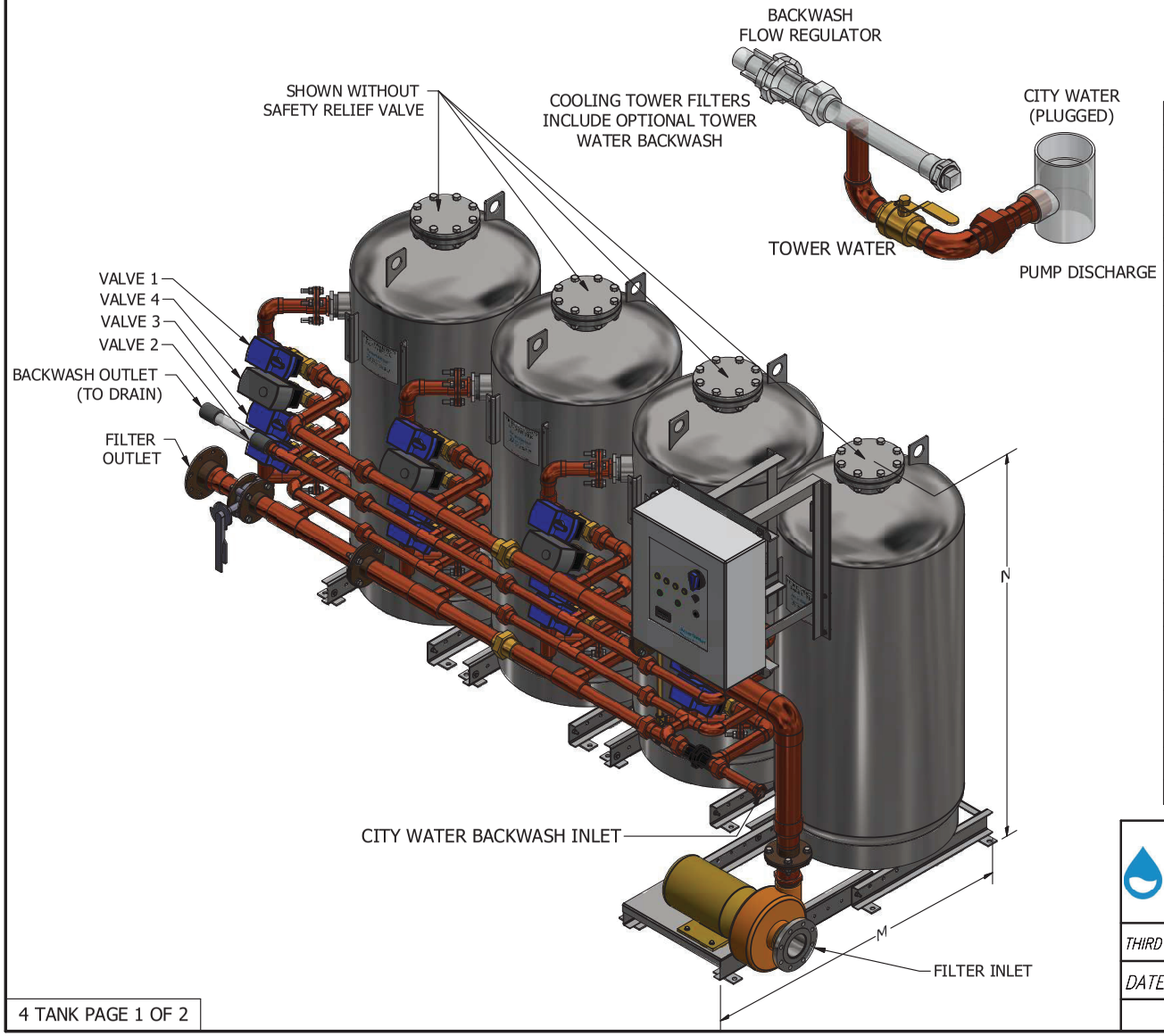


| Model | CW430 | |
|---|---|---|
| Standard Pressure (100 PSI) Vessel | Maximum Pump Inlet Pressure | 60 PSI |
| High Pressure (150 PSI) Vessel* | | 110 PSI |
| Filtration Rating | 0.5 Micron | 0.25 Micron** |
| Flow Rate GPM | 400 | 320 |
| Backwash Flow Rate (GPM) | 45 | 35 |
| Backwash Total Gallons (20 Min. Duration) | 900 | 700 |
| Pump (HP / Voltage / Amps / Ph / RPM) | 10 / 460V / 14 / 3 / 3600 | |
| | 10 / 208V / 30.8 / 3 / 3600 | |
| Valve Size | 1 & 2 | 2" |
| | 3 & 4 | 1.5" |
| Recommended Piping Size | Filter In/Out | 6.0" |
| | City Backwash Inlet | 2.0" |
| | Backwash to Drain | 2.0" |
| Vessel Contruction / Diameter | 304L Stainless Steel / 30" | |
| Recommended Space | 6.5' D x 12' W x 8' H | |
| Unit Weight Plus Media*** | 10,000 lbs. | |

| Piping | A | B | C | D | E | F | G |
|---|---|---|---|---|---|---|---|
| Copper | 140 3/4" | 122" | 26" | 38 1/16" | 20" | 81 1/2" | 82 3/16" |
| PVC**** | 140 3/8" | 122" | 26" | 38 1/16" | 20" | 81 3/8" | 81 15/16" |
| **Piping** | **H** | **I** | **J** | **K** | **L** | **M** | **N** |
| Copper | 22" | 9 5/8" | 30 3/4" | 36 3/4" | 42 3/4" | 59" | 73 7/8" |
| PVC**** | 22" | 9 5/8" | 30 3/4" | 36 3/4" | 42 3/4" | 59" | 73 7/8" |

* Higher pressure systems available
** Closed loop systems only - does not include tower water backwash piping.
*** Unit Weight Plus Media Excludes weight of water
**** PVC piping only available on 100 PSI systems

All data shown above are nominal values and subject to change.
Flow rates depend on customer piping size and length.
Dimensions and weights are approximate and subject to change.

**Design engineer important note for schedule: Sizing based on AmeriWater systems only. Substitutions sized per manufacturer published data or industry standard 5-10% of recirculation rate.**

AmeriWater

3345 STOP 8 ROAD
DAYTON, OH 45414
PHONE: 937.461.8833

TOLERANCES UNLESS OTHERWISE NOTED
.XXX +/- .007
.XX +/- .015
.X +/- .03
X/Y +/- 1/16

THIS DESIGN IS THE PROPERTY OF AMERIWATER AND IS ONLY ALLOWED TO BE USED BY EXPRESS PERMISSION AND LICENSE FROM AMERIWATER.

THIRD ANGLE PROJECTION

HIGH EFFICIENCY FILTER 100-150 PSI

DATE: 02JUL18 | SCALE: NA

SHEET 1 OF 2

CW430 100-150

| REV | DATE | ECR | DESCRIPTION | INIT |
|---|---|---|---|---|
| A | 02JUL18 | | ORIGINAL ISSUE | ARC |
| B | 24OCT18 | | ADDED PRESSURE GAUGE | SB |

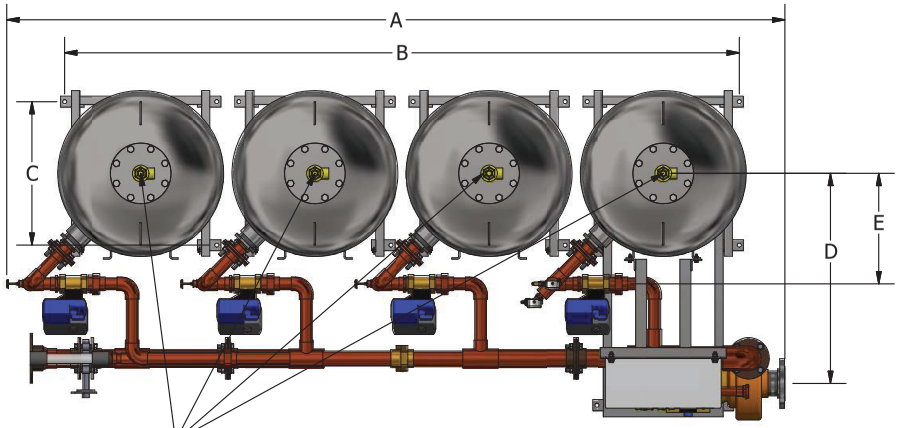


SAFETY RELIEF VALVE INCLUDED
ON ASME CERTIFIED SYSTEMS
*(Optional for non-certified)*

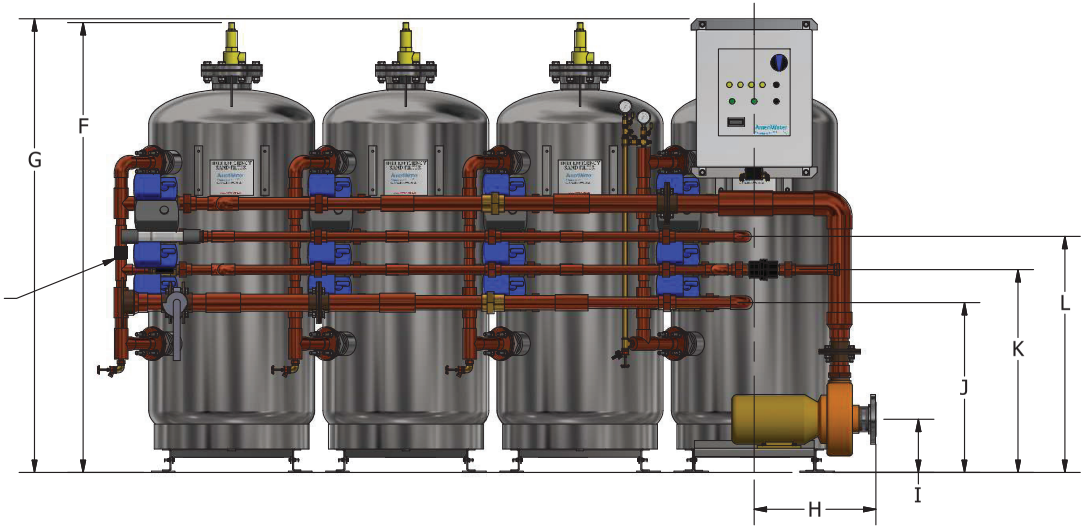


| Model | CW430 | |
|---|---|---|
| Standard Pressure (100 PSI) Vessel | Maximum Pump Inlet Pressure | 60 PSI |
| High Pressure (150 PSI) Vessel* | | 110 PSI |
| Filtration Rating | 0.5 Micron | 0.25 Micron** |
| Flow Rate GPM | 400 | 320 |
| Backwash Flow Rate (GPM) | 45 | 35 |
| Backwash Total Gallons (20 Min. Duration) | 900 | 700 |
| Pump (HP / Voltage / Amps / Ph / RPM) | 10 / 460V / 14 / 3 / 3600 | |
| | 10 / 208V / 30.8 / 3 / 3600 | |
| Valve Size | 1 & 2 | 2" |
| | 3 & 4 | 1.5" |
| Recommended Piping Size | Filter In/Out | 6.0" |
| | City Backwash Inlet | 2.0" |
| | Backwash to Drain | 2.0" |
| Vessel Contruction / Diameter | 304L Stainless Steel / 30" | |
| Recommended Space | 6.5' D x 12' W x 8' H | |
| Unit Weight Plus Media*** | 10,000 lbs. | |

| Piping | A | B | C | D | E | F | G |
|---|---|---|---|---|---|---|---|
| Copper | 140 3/4" | 122" | 26" | 38 1/16" | 20" | 81 1/2" | 82 3/16" |
| PVC**** | 140 3/8" | 122" | 26" | 38 1/16" | 20" | 81 3/8" | 81 15/16" |
| **Piping** | **H** | **I** | **J** | **K** | **L** | **M** | **N** |
| Copper | 22" | 9 5/8" | 30 3/4" | 36 3/4" | 42 3/4" | 59" | 73 7/8" |
| PVC**** | 22" | 9 5/8" | 30 3/4" | 36 3/4" | 42 3/4" | 59" | 73 7/8" |

* Higher pressure systems available
** Closed loop systems only - does not include tower water backwash piping.
*** Unit Weight Plus Media Excludes weight of water
**** PVC piping only available on 100 PSI systems

All data shown above are nominal values and subject to change.
Flow rates depend on customer piping size and length.
Dimensions and weights are approximate and subject to change.

**Design engineer important note for schedule: Sizing based on AmeriWater systems only. Substitutions sized per manufacturer published data or industry standard 5-10% of recirculation rate.**

AmeriWater


3345 STOP 8 ROAD
DAYTON, OH 45414
PHONE: 937.461.8833


TOLERANCES UNLESS OTHERWISE NOTED
.XXX +/- .007
.XX +/- .015
.X +/- .03
X/Y +/- 1/16


THIS DESIGN IS THE PROPERTY OF AMERIWATER AND IS ONLY ALLOWED TO BE USED BY EXPRESS PERMISSION AND LICENSE FROM AMERIWATER.


THIRD ANGLE PROJECTION

HIGH EFFICIENCY FILTER 100–150 PSI

DATE: 02JUL18 | SCALE: NA

SHEET 2 OF 2

CW430 100–150

CP = Control Panel Enclosure with Labeled Components

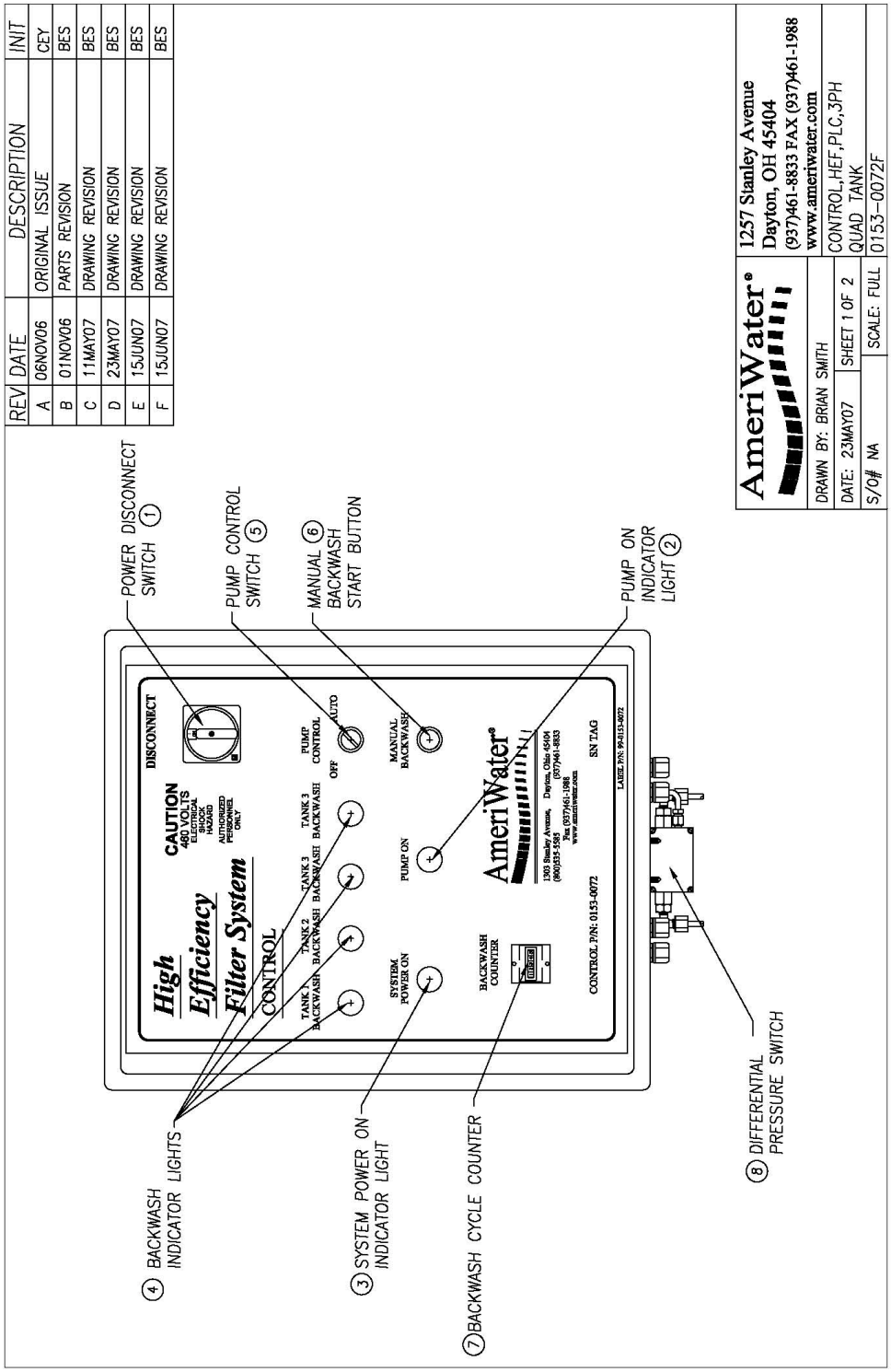

| REV | DATE | DESCRIPTION | INIT |
|---|---|---|---|
| A | 06NOV06 | ORIGINAL ISSUE | CEY |
| B | 01NOV06 | PARTS REVISION | BES |
| C | 11MAY07 | DRAWING REVISION | BES |
| D | 23MAY07 | DRAWING REVISION | BES |
| E | 15JUN07 | DRAWING REVISION | BES |
| F | 15JUN07 | DRAWING REVISION | BES |

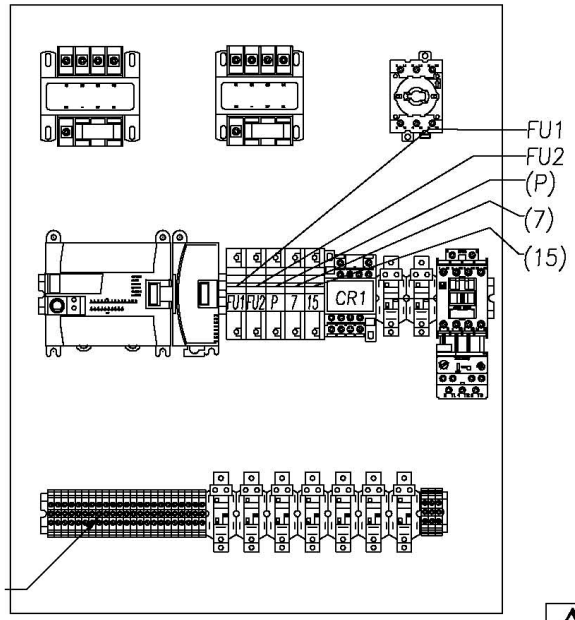


(14) THRU (19)WIRE TERMINALS
REFERENCE THE LADDER DIAGRAM.

AmeriWater®

1257 Stanley Avenue
Dayton, OH 45404
(937)461-8833 FAX (937)461-1988
www.ameriwater.com

DRAWN BY: BRIAN SMITH

DATE: 23MAY07 | SHEET 2 OF 2

S/O# NA | SCALE: FULL

CONTROL,HEF,PLC,3PH
QUAD TANK

0153-0072F

TBIO = Input/output strips on Terminal block labeled to indicate connection points

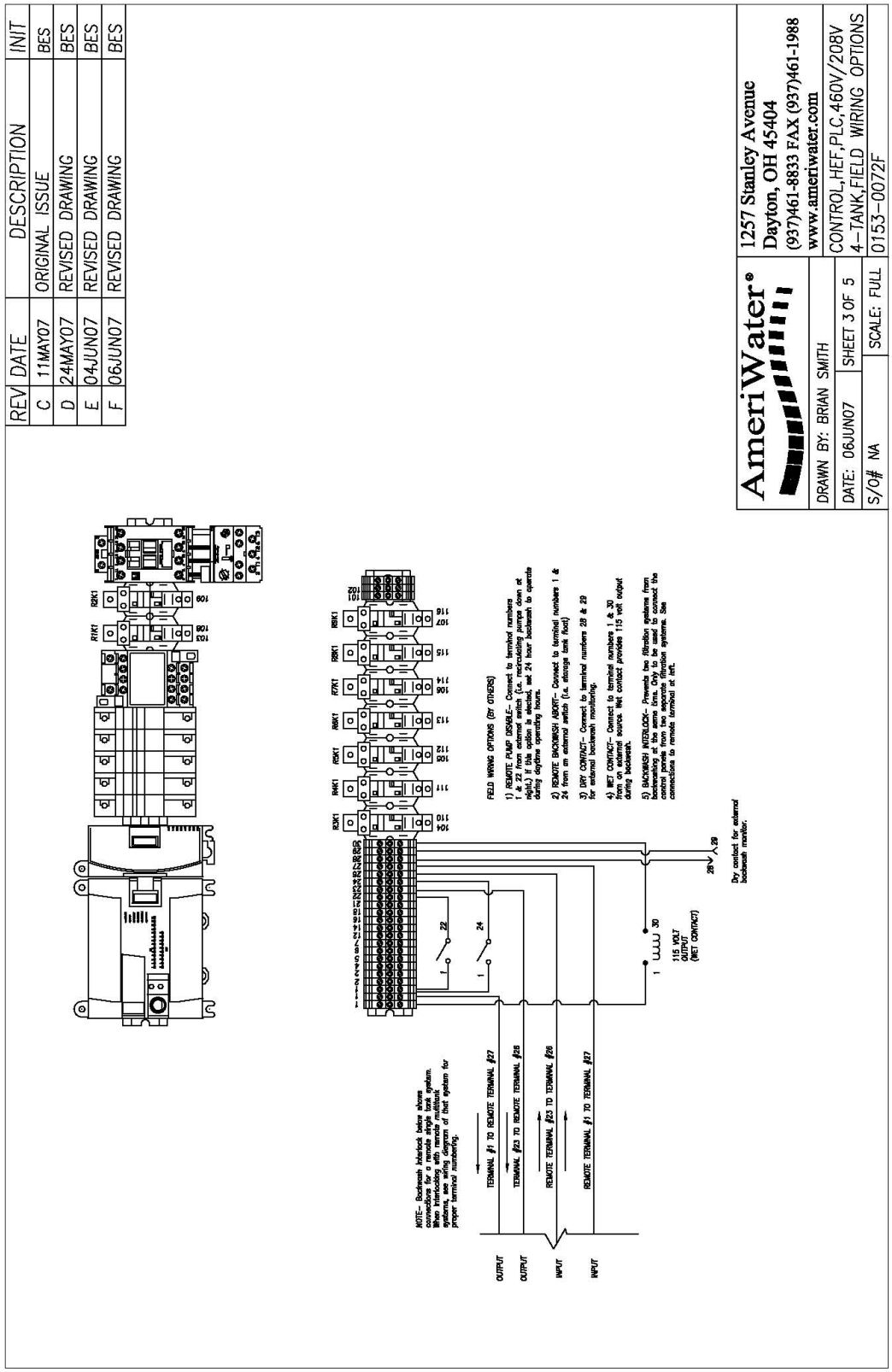

| REV | DATE | ECR | DESCRIPTION | INIT |
|---|---|---|---|---|
| A | 22JAN10 | N/A | ORIGINAL ISSUE | BS |
| C | 20FEB12 | 2012-008 | MODIFY THE FUSING DESIGNATION ON THE HEF OFF | BS |

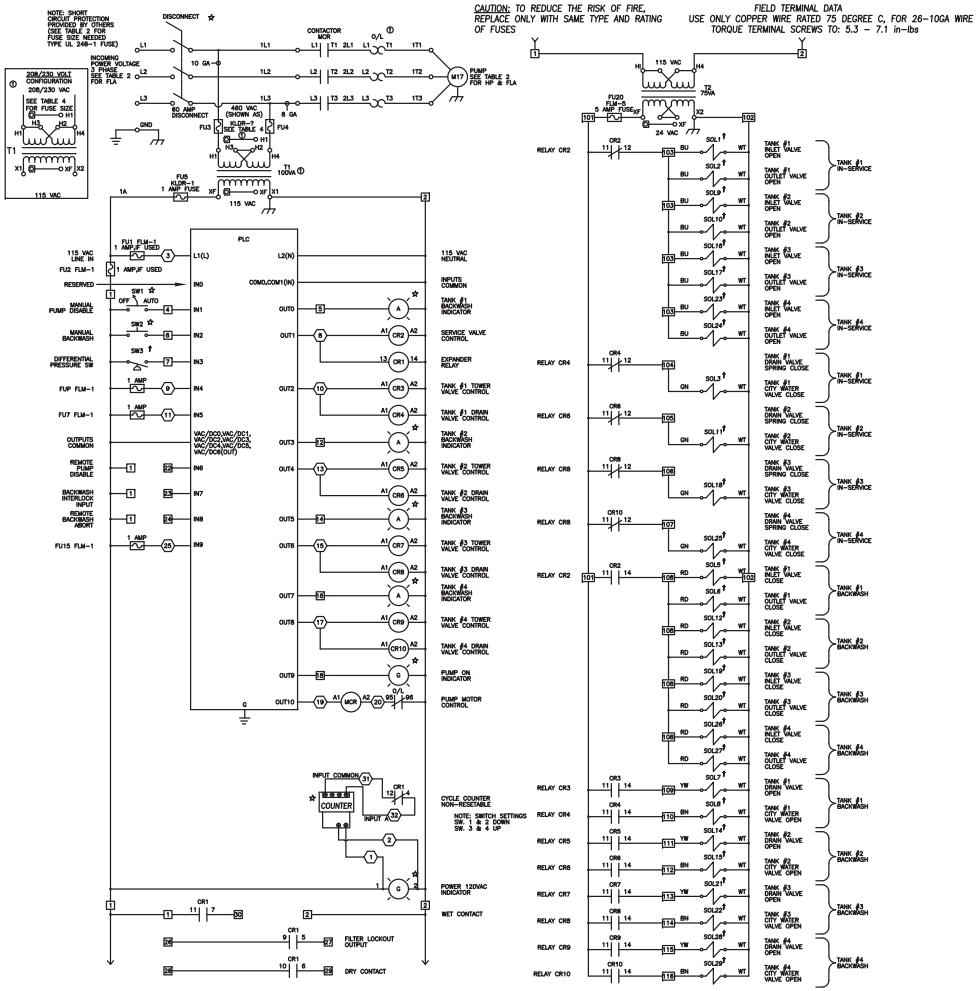


TABLE 1

| ELECTRICAL LEGEND | |
|---|---|
| 460 VAC – VOLTAGE | L3 T3 – SINGLE-PHASE THERMAL TRIP |
| – NORMALLY CLOSED RELAY | – NORMALLY OPEN RELAY |
| 103 – TERMINAL BLOCK NUMBER | IN1,2 ETC. – INPUT |
| SOL1 – VALVE SOLENOID | OUT1,2 ETC. – OUTPUT |
| CR1 – CONTROL RELAY | – 3-PHASE SELECTOR SWITCH |
| 15 – WIRING NUMBER ON TERM. BLOCK | X1 – WIRE(HOT) |
| – WIRE CONNECTION | 2 – WIRE(NEUTRAL) |
| 8 – DENOTES WIRE NUMBER | PLC – PROGRAMABLE LOGIC CONTROL |
| | MCR –MOTOR CONTROL RELAY/STARTER |
| 1 AMP – FUSE | O/L 95 96 – PUMP MOTOR OVERLOAD |
| WT – DENOTES WIRE COLOR | M17 3-PHASE MOTOR |
| A – INDICATOR LIGHT | |
| H3 H2 – JUMPER | H1 H4 T1 X1 X2 – FUSED TRANSFORMER 115 VAC |
| – EARTH GROUND | |
| SW1 OFF AUTO – SELECTOR SWITCH | COUNTER –CYCLE COUNTER |
| SW2 –MOMENTARY PUSHBUTTON SWITCH(N/O) | 1 AMP – REMOVABLE FUSE |
| SW3 –NORMALLY OPEN SWITCH | |
| FUP FLM-1 1 AMP – FUSED TO ENABLE PUMP OPERATION DURING SYSTEM WATER BACKWASH | FU7 FLM-1 1 AMP – FUSED TO ENABLE 7 DAY BACKWASH FOR CLOSED LOOPS |
| FU15 FLM-1 1 AMP – BACKWASH 5/15 MIN TIME SELECT (STARTUP) | – PANEL GROUND |
| | – FIELD REMOTE ITEM |
| | – ITEM MOUNTED ON DOOR |

TABLE 2

① BOM/WIRING CHANGES AS NEEDED FROM 460 STANDARD SYSTEM

| MOTOR LOADING HP/FLA & PANEL FLA FOR STANDARD MOTOR RATINGS | | | | | | | |
|---|---|---|---|---|---|---|---|
| TANK SIZE | HP | 208 VAC FLA ① | | 230 VAC FLA ① | | 460 VAC FLA | |
| | | MOTOR | PANEL | MOTOR | PANEL | MOTOR | PANEL |
| 4x30 INCH | 15 | 48.3A | 48.7A | 42.0A | 42.4A | 21.0A | 21.2A |
| FUSE NEEDED | | 80.0A FUSE | | 60.0A FUSE | | 35.0A FUSE | |

TABLE 3

| WIRE SIZE AND COLOR (AT A MINIMUM) | | |
|---|---|---|
| WIRE TYPE | SIZE | COLOR |
| POWER | 8 AWG | BLACK |
| VAC CONTROL | 18 AWG | RED |
| VAC NEUTRAL | 18 AWG | WHITE |
| VDC CONTROL | 18 AWG | BLUE |
| VDC NEUTRAL | 18 AWG | WHITE/BLUE STRIPE |
| REMOTE | 18 AWG | ORANGE |
| SHIELDED 2 or 3 COND | 18 AWG | BLACK – RED + BLUE WIPER |
| MTR/DRV GND | 16 AWG | GREEN/YELLOW STRIPE |
| OTHER GND | 16 AWG | GREEN/YELLOW STRIPE |

TABLE 4

| T1 TRANSFORMER PRIMARY FUSING | |
|---|---|
| PRIMARY VOLTAGE | FU3 & FU4 FUSE SIZE |
| 208 | KLDR-2 |
| 230 | KLDR-2 |
| 460 | KLDR-1 |

AmeriWater®

3345 STOP 8 ROAD
DAYTON, OH 45414
PHONE: 937.461.8833

TOLERANCES UNLESS OTHERWISE NOTED
.XXX +/- .007
.XX +/- .015
.X +/- .03

THIS DESIGN IS THE PROPERTY OF AMERIWATER AND IS ONLY ALLOWED TO BE USED BY EXPRESS PERMISSION AND LICENSE FROM AMERIWATER.

THIRD ANGLE PROJECTION

CONTROL,HEF,PLC,460V-3PH, FOUR TANK

DATE: 20FEB12 | SHEET 3 OF 4

SCALE: NA | DWN BY: BS | CKD BY: BA | 0153-0121C

| REV | DATE | ECR | DESCRIPTION | INIT |
|---|---|---|---|---|
| A | 22JAN10 | N/A | ORIGINAL ISSUE | BS |
| C | 20FEB12 | 2012-008 | MODIFY THE FUSING DESIGNATION ON THE HEF WIRING SCHEMATICS FOR TRANSFORMER FUSING | BS |

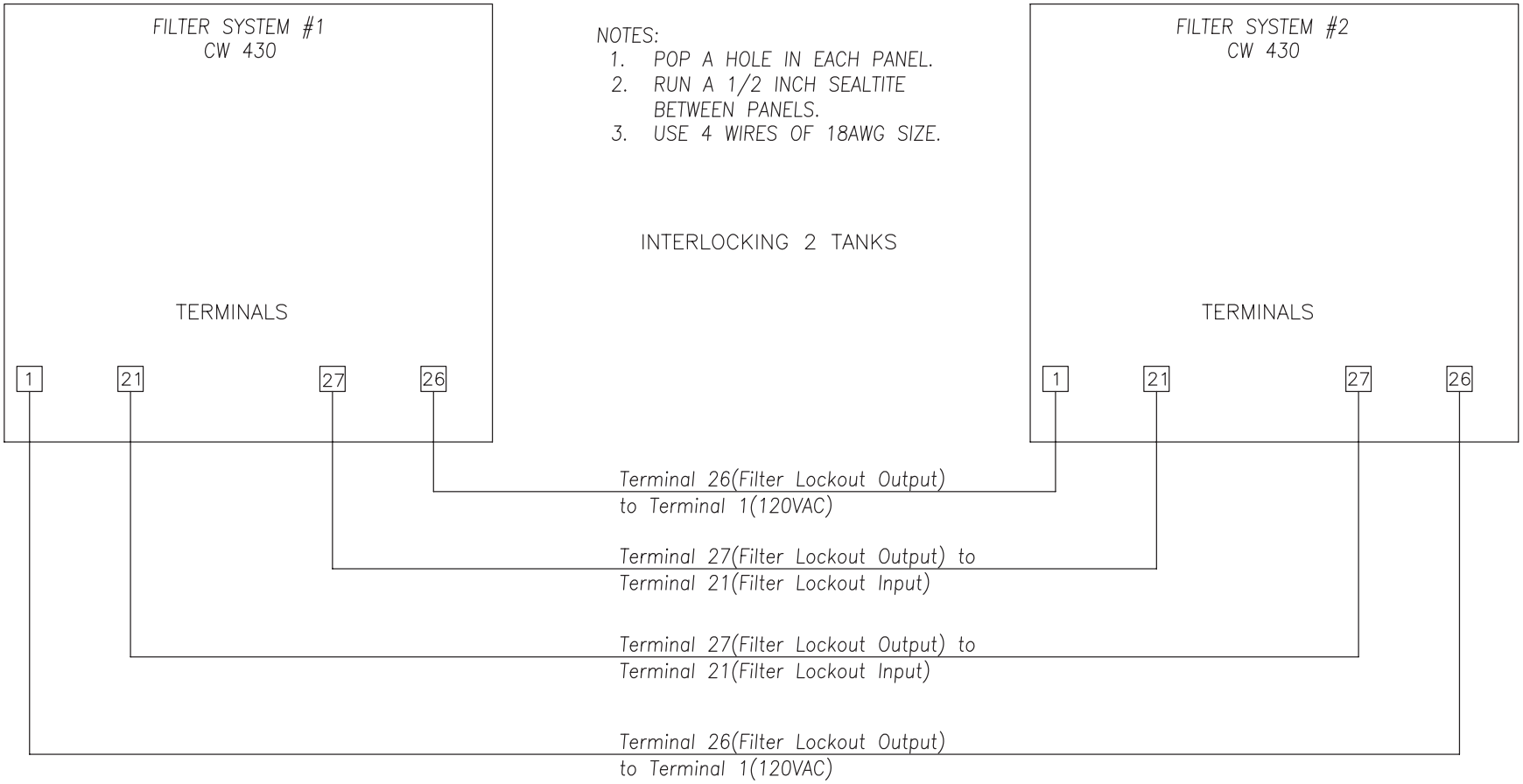


NOTES:
1. POP A HOLE IN EACH PANEL.
2. RUN A 1/2 INCH SEALTITE BETWEEN PANELS.
3. USE 4 WIRES OF 18AWG SIZE.

INTERLOCKING 2 TANKS

AmeriWater®

3345 STOP 8 ROAD
DAYTON, OH 45414
PHONE: 937.461.8833

TOLERANCES UNLESS OTHERWISE NOTED
.XXX +/- .007
.XX +/- .015
.X +/- .03

THIS DESIGN IS THE PROPERTY OF AMERIWATER AND IS ONLY ALLOWED TO BE USED BY EXPRESS PERMISSION AND LICENSE FROM AMERIWATER.

THIRD ANGLE PROJECTION

CONTROL,HEF,PLC,460V-3PH, FOUR TANK

DATE: 20FEB12 | SHEET 4 OF 4

SCALE: NA | DWN BY: BS | CKD BY: BA

0153-0121C

CPIO = Input/output strips on PLC labeled to indicate connection points

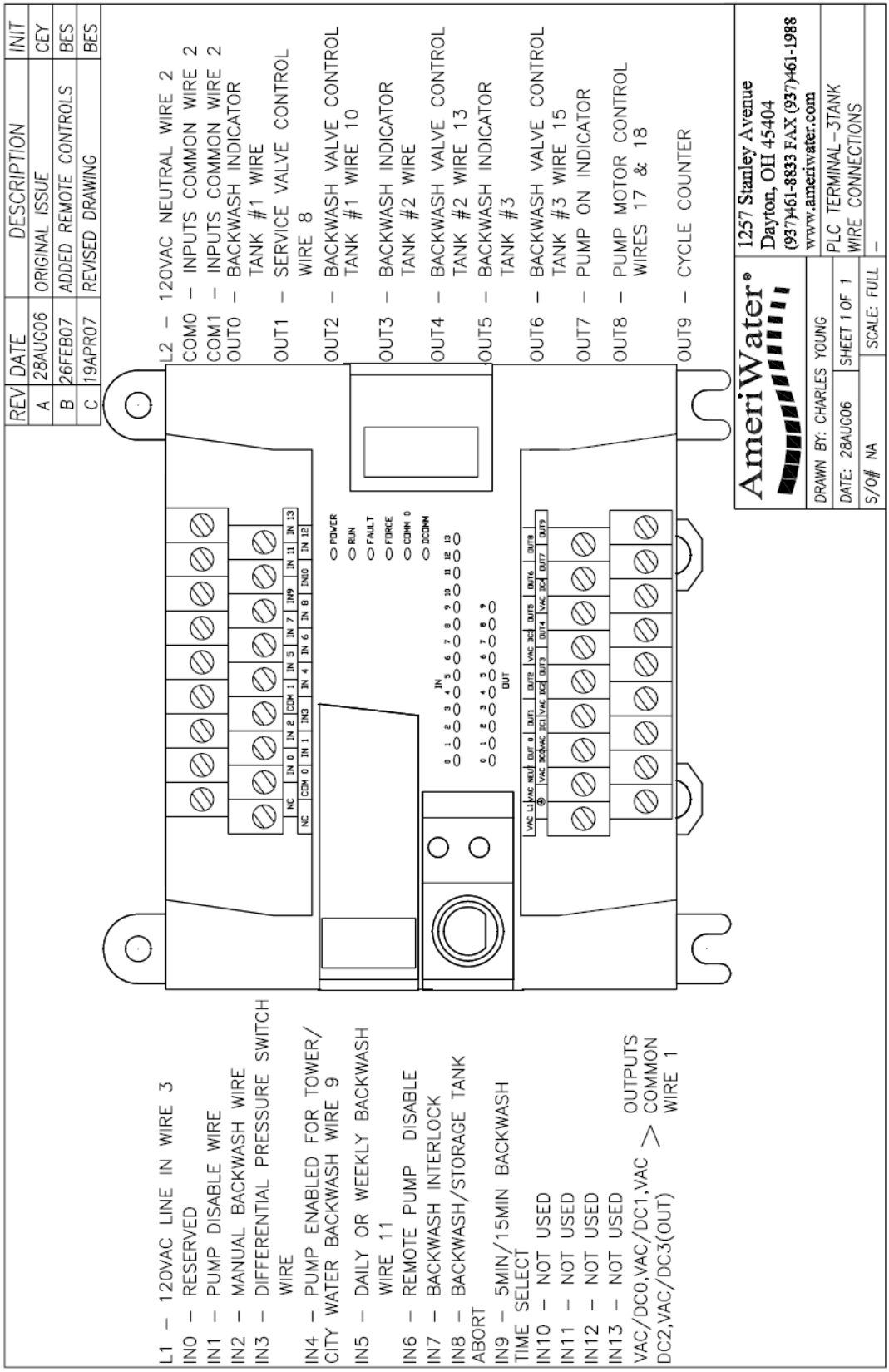

| REV | DATE | ECR | DESCRIPTION | INIT |
|---|---|---|---|---|
| A | 20AUG18 | | ORIGINAL ISSUE | ARC |
| B | 22OCT18 | | ADDED CITY WATER PRESSURE GAUGE | AC/SB |

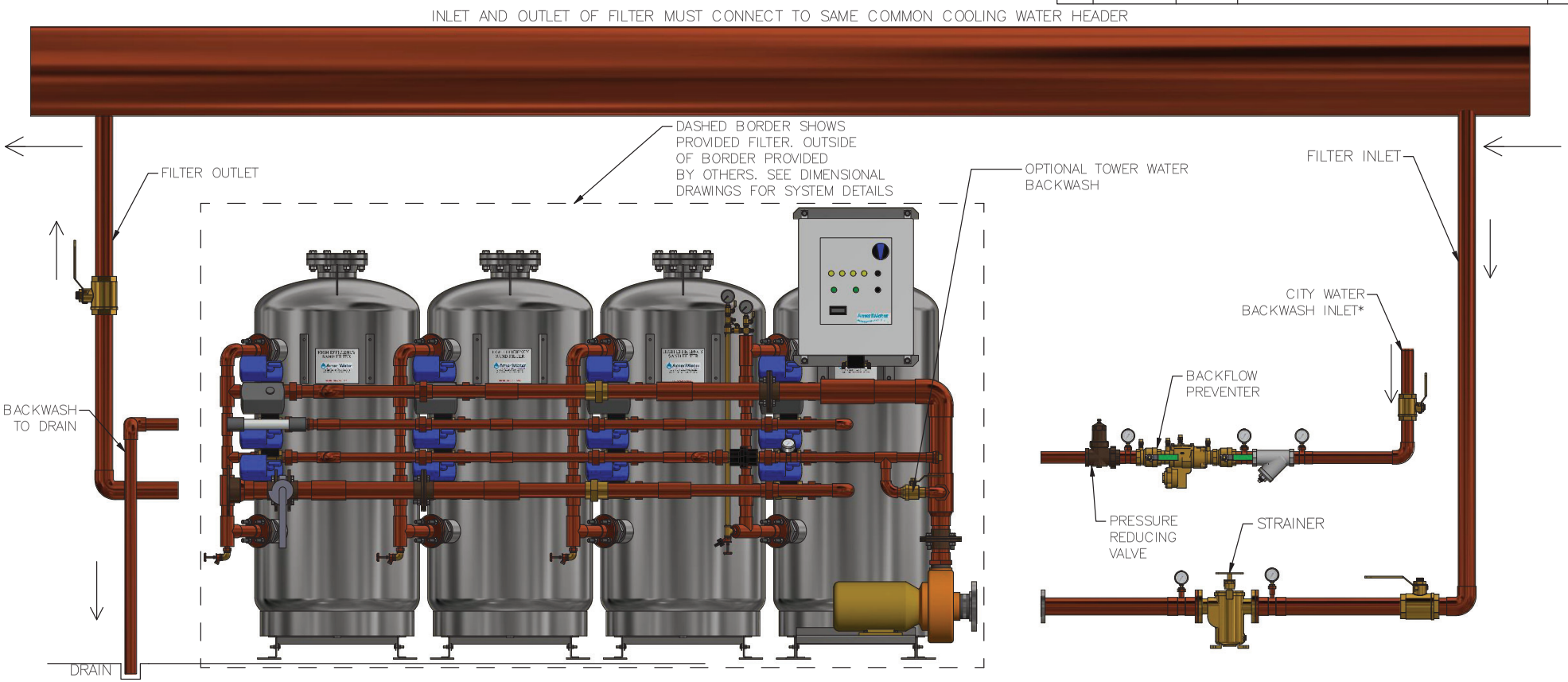


* CITY WATER OR ALTERNATE CLEAN WATER SOURCE. NOT REQUIRED FOR FILTERS USING OPTIONAL TOWER BACKWASH.

INSTALLATION NOTES:

1) DURING BACKWASH WATER PRESSURE MUST BE BETWEEN 30 AND 60 PSIG ENTERING BACKWASH FLOW REGULATOR, WITH THE IDEAL PRESSURE SETTING BEING 40 PSIG.
   a. CITY WATER – INSTALL PRESSURE REDUCING VALVE IF REQUIRED.
   b. TOWER WATER – ADJUST TOWER WATER BACKWASH VALVE TO KEEP PRESSURE WITHIN RANGE.
2) MAXIMUM BACKWASH WATER TEMPERATURE IS 140°F (CONSULT CHEMWORKS).
3) CONSULT CHEMWORKS FOR PIPE RUNS GREATER THAN 20' FROM FILTER.
4) CONSULT CHEMWORKS FOR VERTICAL DRAIN PIPE INSTALLATIONS GREATER THAN 8' IN HEIGHT.
5) ALL PIPING MUST MEET STATE AND LOCAL PLUMBING CODES.
6) SINGLE POINT ELECTRICAL CONNECTION TO CONTROL PANEL.

AmeriWater

3345 STOP 8 ROAD
DAYTON, OH 45414
PHONE: 937.461.8833

TOLERANCES UNLESS OTHERWISE NOTED
.XXX +/- .007
.XX +/- .015
.X +/- .03
X/Y +/- 1/16

THIS DESIGN IS THE PROPERTY OF AMERIWATER AND IS ONLY ALLOWED TO BE USED BY EXPRESS PERMISSION AND LICENSE FROM AMERIWATER.

THIRD ANGLE PROJECTION

HIGH EFFICIENCY SAND FILTER TYPICAL FOUR TANK INSTALLATION

DATE: 07AUG18 | SCALE: NA

SHEET 1 OF 1

| REV | DATE | DESCRIPTION | INIT |
|---|---|---|---|
| A | 04DEC07 | ORIGINAL ISSUE | CEY |

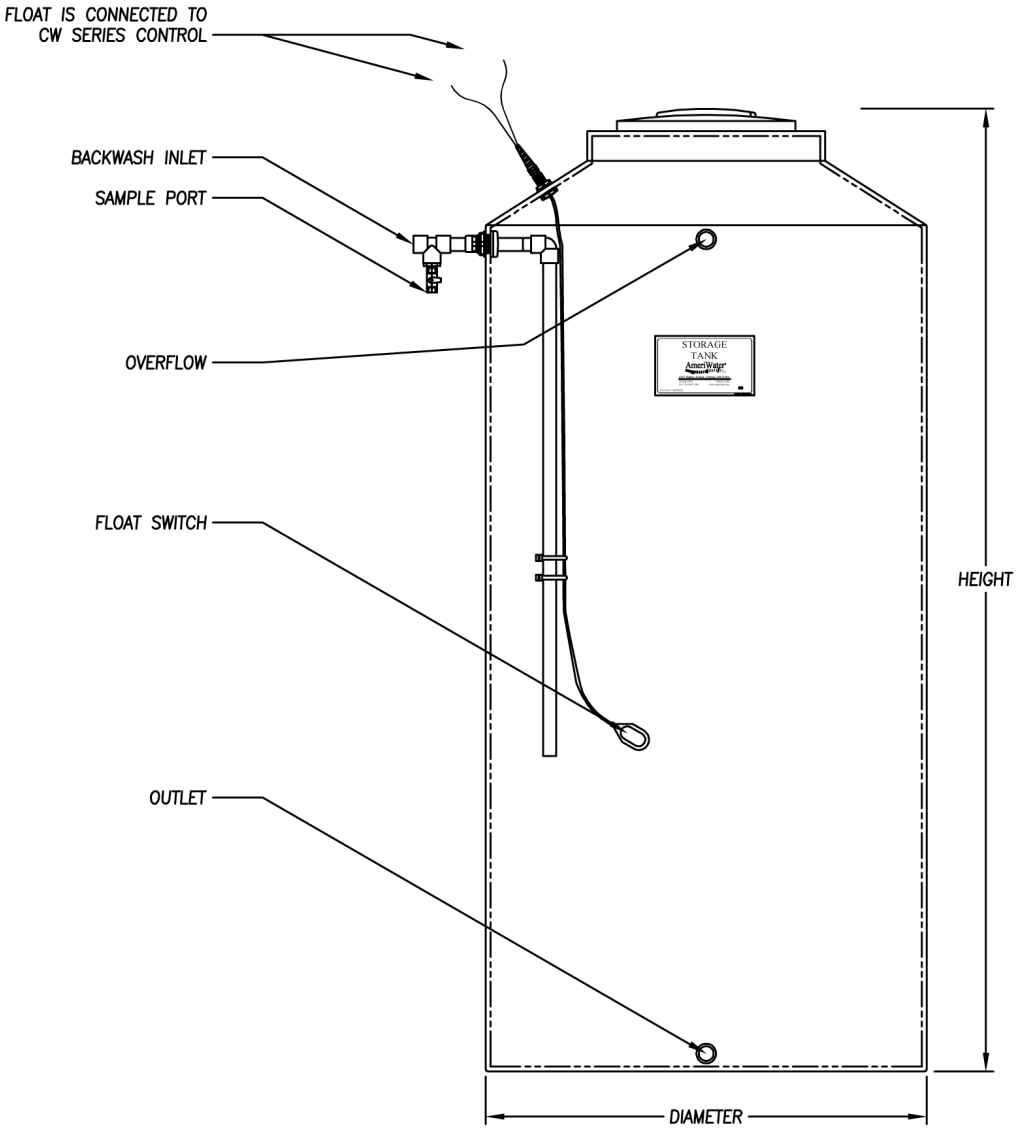


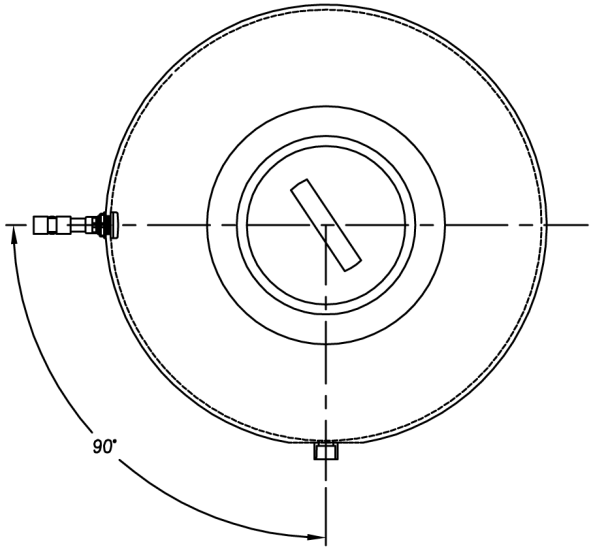


| MODEL | CAPACITY IN GALLONS | INLET | OUTLET | OVERFLOW | DIAMETER | HEIGHT |
|---|---|---|---|---|---|---|
| CWBWST130 | 130 | 1" | 1" FPT | 1" FPT | 23" | 76" |
| CWBWST200 | 200 | 1" | 1" FPT | 1" FPT | 30" | 72" |
| CWBWST300 | 300 | 2" | 2" FPT | 2" FPT | 35" | 81" |
| CWBWST550 | 550 | 2" | 2" FPT | 2" FPT | 45" | 97" |
| CWBWST750 | 750 | 2" | 2" FPT | 2" FPT | 46" | 119" |
| CWBWST1000 | 1000 | 2" | 2" FPT | 2" FPT | 64" | 81" |

NOTE:

TANKS CONSTRUCTED FROM LINEAR POLYETHYLENE.

AmeriWater®

1257 Stanley Avenue
Dayton, OH 45404
(937)461-8833 FAX (937)461-1988
www.ameriwater.com

DRAWN BY: CHARLES YOUNG

DATE: 04DEC07 | SHEET 1 OF 1

S/O# N/A | SCALE: FULL

TANK STORAGE,BACKWASH
1"–2"OUTLET FLAT BOTTOM

0079–CWBWST

ML = Media Label

# MEDIA LAYER 1

## (LOAD FIRST)

## GRAVEL ½ x ¼

Caution: Product contains silica.
See MSDS for proper handling and safety precautions.

_____ OF _____

The Media Layer number on the Media Label corresponds to the order in which it is to be loaded (for example, Media Layer 1 is loaded first, Media Layer 2 second, etc.).

The Media Label identifies the total quantity (for example: 1 OF 2) to ensure that each media layer is loaded at the correct quantity.

# 6 System Component Cut Sheets

# OWNERS MANUAL

INSTALLATION AND OPERATING INSTRUCTIONS
REPAIR PARTS LIST

# Close Coupled Motor Driven Centrifugal Pump

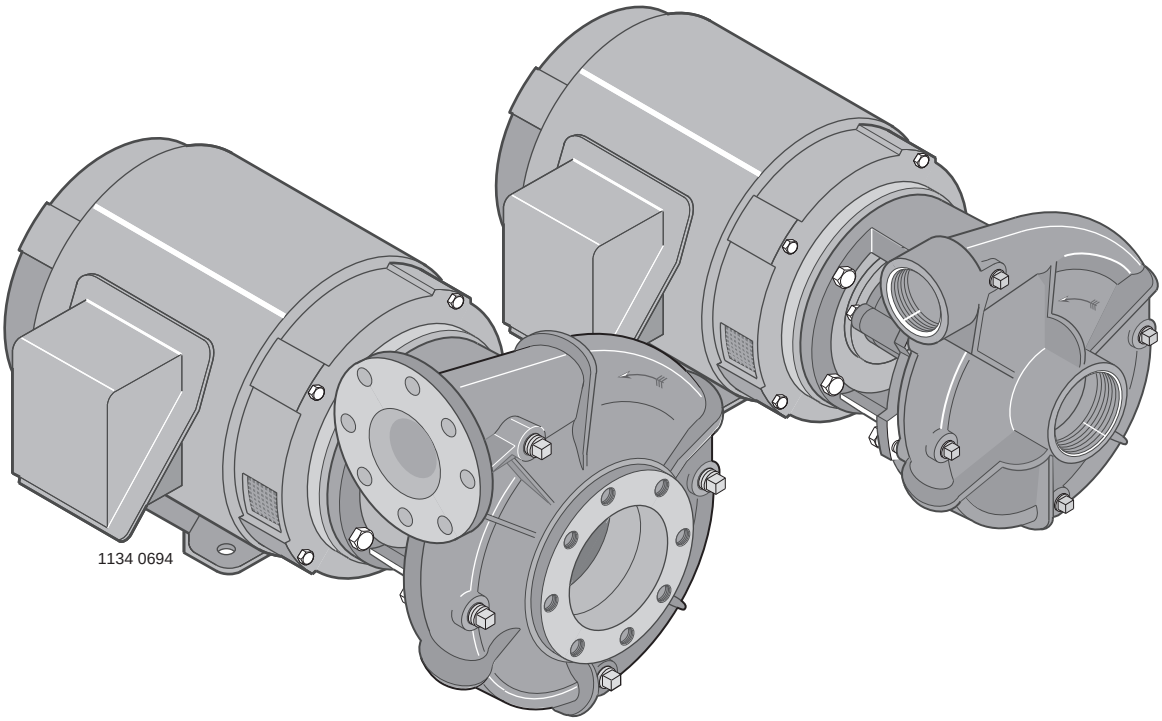


**IMPORTANT**

**For best possible performance and continuous, satisfactory operation, read these instructions before installing your new pump.**
Should service be required, this manual can be a valuable guide.
It should be kept near the installation for ready reference.
Record nameplate data from pump on blank nameplate inside this manual for future reference.

**Berkeley Pumps / 293 Wright Street / Delavan, WI 53115**

**F00634** (Rev. 7/21/09)

# Table of Contents


Page

• **SAFETY** ..... 3

• **INSTALLATION**

General Information ..... 4, 5
Foundation ..... 5
Suction Connection for Centrifugal Pump Installation ..... 4, 6-9
Suction Connection for Swimming Pool Installation ..... 4, 10-11
Discharge Connection ..... 4, 12-13
Electrical Connection ..... 4, 14

• **START-UP**

General Information ..... 15
Check Pump Rotation ..... 15, 16
Priming ..... 15, 17

• **MAINTENANCE**

General Information / Observational Maintenance / Pump Protection ..... 18
Packing ..... 18, 19
Mechanical Shaft Seal ..... 18, 20-21

• **PUMP NOMENCLATURE**

General Information ..... 22
Parts Breakdown ..... 23

• **TROUBLESHOOTING**

Chart ..... 24

# Safety First

## READ AND FOLLOW SAFETY INSTRUCTIONS!

⚠ **This is the safety alert symbol.** When you see this symbol on your pump or in this manual, look for one of the following signal words and be alert to the potential for personal injury:

**⚠ DANGER** warns about hazards that **will** cause serious personal injury, death or major property damage if ignored.

**⚠ WARNING** warns about hazards that **will** or **can** cause serious personal injury, death or major property damage if ignored.

**⚠ CAUTION** warns about hazards that **will** or **can** cause minor personal injury or property damage if ignored.

The label **NOTICE** indicates special instructions which are important but not related to hazards.

**Carefully read and follow all safety instructions in this manual and on pump.**

Keep safety labels in good condition.

Replace missing or damaged safety labels.

### *Electrical Safety*

**⚠ WARNING**

**Hazardous voltage. Can shock, burn, or cause death.**

Ground pump before connecting to power supply.

**⚠ Wire motor for correct voltage. See "Electrical" section of this manual and motor nameplate.**

**⚠ Ground motor before connecting to power supply.**

**⚠ Meet National Electrical Code and local codes for all wiring.**

**⚠ Follow wiring instructions in this manual when connecting motor to power lines.**

### *General Safety*

Do not allow pump, piping, or any other system component containing water to freeze. Freezing may damage system, leading to injury or flooding. Allowing pump or system components to freeze will void warranty.

Pump approved liquids only with this pump.

Periodically inspect pump and system components.

Wear safety glasses at all times when working on pumps.

Keep work area clean, uncluttered and properly lighted; store properly all unused tools and equipment.

Keep visitors at a safe distance from the work areas.

Make workshops childproof; use padlocks and master switches; remove starter keys.

### *Swimming Pool and Spa Installation Safety*

**⚠ WARNING**
**Hazardous pressure**

**Incorrectly installed or tested equipment may fail, causing severe injury or property damage.**
Read and follow instructions in owner's manual when installing and operating equipment. Have a trained pool professional perform all pressure tests.

1. Do not connect system to a high pressure or city water system.
2. Install pump with at least 2 hydraulically balanced main drains equipped with correctly installed, screw-fastened, anti-entrapment certified covers. See Page 11.
3. Trapped air in system can cause explosion. BE SURE all air is out of system before operating or testing equipment.

**Before pressure testing, make the following safety checks:**

- Check all clamps, bolts, lids, and system accessories before testing.
- Release all air in system before testing.
- Tighten Berkeley trap lids to 30 ft. lbs. (4.1 kg-cm) torque for testing.
- Water pressure for test must be less than 25 PSI (172 kPa).
- Water Temperature for test must be less than 100° F. (38° C).
- Limit test to 24 hours. After test, visually check system to be sure it is ready for operation. Remove trap lid and retighten hand tight only.

  **NOTICE:** These parameters apply to Berkeley equipment only. For non-Berkeley equipment, consult manufacturer.

# General Information

## CHECK ROTATION:

Before pump is put into operation, rotational direction must be checked to assure proper performance of pump. Refer to illustration on Page 16.

**⚠WARNING** **Hazardous voltage. Can shock, burn, or cause death.** Disconnect power to pump before servicing.

Do not attempt any wiring changes without first disconnecting power to pump.

## PRIMING:

Pump priming is the displacement of air with water in the pump and suction piping. Pump **MUST BE** completely filled with water when operating.

Refer to Page 17 for instruction on the following conditions:

1. Suction lift with priming pump (water source below pump).
2. Suction lift with foot valve (water source below pump).
3. Flooded suction (water source above pump, or incoming water pressure is greater than atmospheric pressure).

SPECIAL CASE - HYDRAULIC BALANCED PUMPS:
Hydraulic balanced pumps operate with a very low positive pressure across the stuffing box, permitting a much looser fit of the packing rings around the shaft sleeve to control the loss of water from the pump through the stuffing box. Because of the looser fit of the packing rings, air can be more easily drawn into the pump through the stuffing box when priming the pump with an air evacuation type primer.

A grease fitting, communicating through the side of the stuffing box to a lantern ring in the packing set, is provided to grease-seal the stuffing box to prevent air leakage during priming.

If pump cannot be primed due to air leakage through stuffing box, **DO NOT** tighten packing. Instead, pump grease into lantern ring until back pressure occurs forcing grease into the lantern ring, grease-sealing the stuffing box. After priming, when unit is put into operation, the grease will be flushed out through the packing by the water flowing outward through the stuffing box. Proceed with normal adjustment of the packing as described on Page 18. Note that the grease seal only is used for control of air leaking during priming, and that only the packing gland is used to control flow of water through the stuffing box during normal operation.

When necessary to replenish the grease supply use an NLGI no. 4 Water Pump Grease.

## STARTING:

**⚠WARNING** **Never run pump dry**. Running pump without water will overheat pump and damage internal parts. Always make sure pump is primed prior to start-up.

**NOTICE:** Refer to maintenance section if pump has packing for adjustment prior to start-up.

Prime pump by one of the above procedures. Turn on power to pump. Slowly open discharge valve until desired flow rate is achieved. Place the “Hand-Off-Auto” selector switch in the “Auto” position. The pump will be started automatically when the pilot device signals the motor starter.

## STOPPING:

Pump will stop automatically when the pilot device de-energizes the motor starter. Turn the “Hand-Off-Auto” selector switch to “Off” position if you want to stop the pump while it is running.

# Determine Pump Rotation

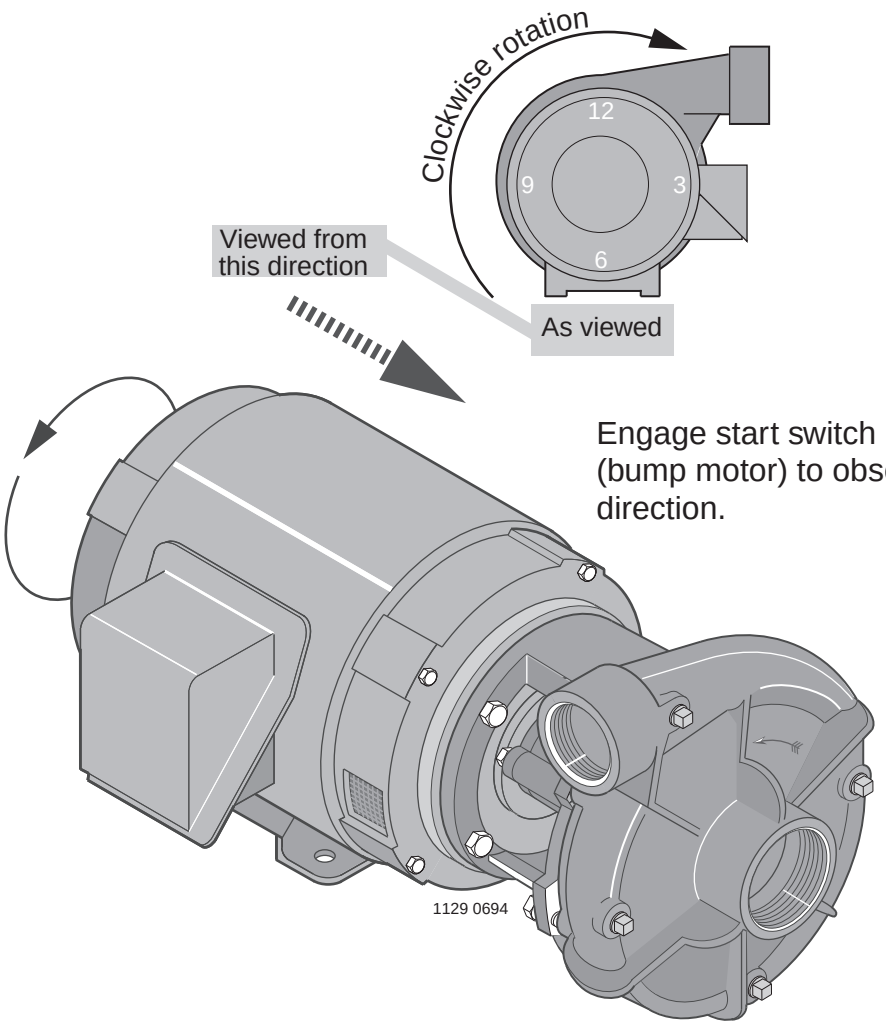


Engage start switch momentarily (bump motor) to observe rotational direction.

Direction of Pump Rotation is determined by viewing liquid end of pump from the **back** or **shaft side**, and ***not*** from looking into the impeller eye or front of volute case. A rotation direction arrow is cast into the pump body and shows correct rotation.

- Electric Motors:

  **Single Phase:** Refer to wiring information on the motor plate to obtain proper rotation.

  **Three Phase:** If pump runs backwards, reverse any two leads coming off incoming power (L1, L2, L3) until proper rotation is obtained. Reverse L1 and L2, or L2 and L3, or L1 and L3.

- Pump running backward - Centrifugal pumps will still pump liquids, however, GPM and head (discharge pressure) will be a fraction of the published performance.

# Start-up

# Pump Priming

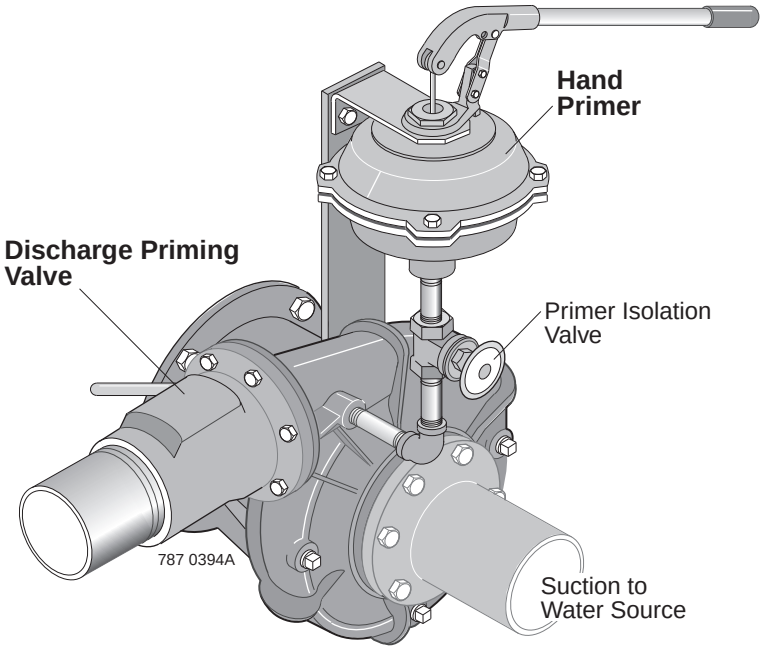


## Installations With Flooded Suction.

- Open air vent (or pipe plug) in the highest tapped opening in pump case.
- Open inlet isolation valve, allowing water to fill the pump completely and force all air out through vent.
- Rotate shaft slowly allowing any air trapped in impeller to escape.
- Close vent opening when water without air emerges.

## Installations With Suction Lift and Foot Valve.

- Close air tight valve on discharge.
- Remove pipe plug from highest opening on pump case.
- Completely fill pump and suction piping with water.
- Rotate shaft slowly allowing any air trapped in impeller to escape.
- When all air has been forced out of pump, replace pipe plug. Use pipe joint compound on plug threads and tighten as necessary to prevent leakage.

## Installations With Suction Lift and Priming Pump.

- Close air tight valve.
- Hand primer operation:
  1. Open hand primer isolation valve.
  2. Work handle of hand primer up and down to evacuate air from the suction line.
     (Refer to primer owner's manual for proper procedure).
  3. When water flows freely from primer, close hand primer isolation valve.
     (Pump case should now be filled with water).
- Immediately start pump.
- Slowly open butterfly valve (if used) until desired flow is achieved.
  (Discharge Priming Valve will open automatically).

# General Information

## LUBRICATION:

LIQUID END of pump requires **no** lubrication. Wear rings, packing rings, and models using a mechanical shaft seal, are lubricated by the liquid being pumped. Do not run dry!

**NOTE:** Grease fitting in packing area is for priming only. See *PRIMING* in start-up section for instruction.

MOTOR bearings are lubricated at the factory. Re-lubrication at intervals consistent with the amount of use will provide maximum bearing life. Refer to motor Instruction Manual for proper motor lubrication and maintenance instructions.

## PERFORMANCE CHECK:

Periodically check the output of the pump. If performance is noticeably reduced, refer to Troubleshooting Chart.

## OBSERVATIONAL MAINTENANCE:

When the pump and system operation have been stabilized, verify that pump unit is operating properly. Observe the following:

VIBRATION: All rotating machines can be expected to produce some vibration, however, excessive vibration can reduce the life of the unit. If the vibration seems excessive, discontinue operation, determine cause of the excessive vibration, and correct.

NOISE: When the unit is operating under load, listen closely for unusual sounds that might indicate that the unit is in distress. Determine the cause and correct.

OPERATING TEMPERATURE: During operation, heat is dissipated from the pump and the driver. After a short period of time, the surface of the pump bracket will be quite warm (as high as 150°F), which is normal. If the surface temperature of the pump bracket or driver is excessive, discontinue operation, determine cause of the excessive temperature rise, and correct. Bearings will run hotter for a brief run-in period after packing which is normal. However, worn bearings will cause excessive temperatures and need to be replaced. The pump unit is cooled by the water flowing through it, and will normally be at the temperature of the water being pumped.

STUFFING BOX: After a short period of operation, verify that the stuffing box area and gland are not hot. If heating is detected, loosen the gland nuts evenly until water is just running out of stuffing box in a *DROPLET* form. Water must not be streaming or spraying out. Verify cool operation periodically. Adjust gland nuts *EVENLY* as necessary for lubrication and cooling of the packing. If packing has been tightened to the limit of the packing gland travel, additional packing is necessary.

## PACKING: *Starting new pump.*

Before starting pump for the first time, loosen gland nuts and retighten finger tight. Proceed with pump start-up procedure. Allow packing to leak liberally for a few moments. Then tighten gland nuts one complete turn each until leakage is reduced to 40 to 60 drops per minute.

## REPACKING:

Refer to Page 19.

## MECHANICAL SEAL:

Adjustment or maintenance is normally not required. The seal is enclosed within the pump and is self adjusting. Seal is cooled and lubricated by the liquid being pumped. Refer to Pages 20 and 21 for removal and replacement. Do not run dry!

## PUMP PROTECTION- COLD WEATHER/ WET WEATHER INSTALLATIONS:

SYSTEM DRAINS: Provide drain valves to empty system, including pump case, to prevent freezing damage.

SHELTER: If possible, provide shelter for unit to protect from weather. Allow adequate space around pump unit for service. When effectively sheltered, a small amount of heat will keep temperature above freezing. Provide adequate ventilation for unit when running. For severe weather problems, where other shelter is not practical, a totally enclosed fan-cooled enclosure can be considered for electric motors.

CONDENSATION: When the temperature of metal parts is below dew point and the surrounding air is moist, water will condense on the metal surfaces and can cause corrosion damage. In severe situations, a space heater can be considered to warm the unit.

# Packing Ring Replacement–All Models

## Removal

**1**

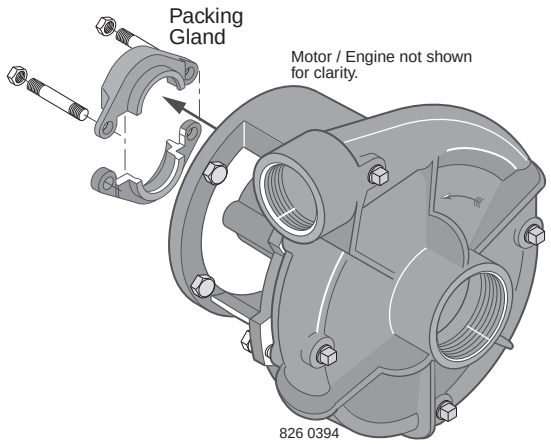


- Unfasten hardware holding Packing Gland in place and slide back on shaft to expose packing rings. A split Packing Gland is shown.

**2**

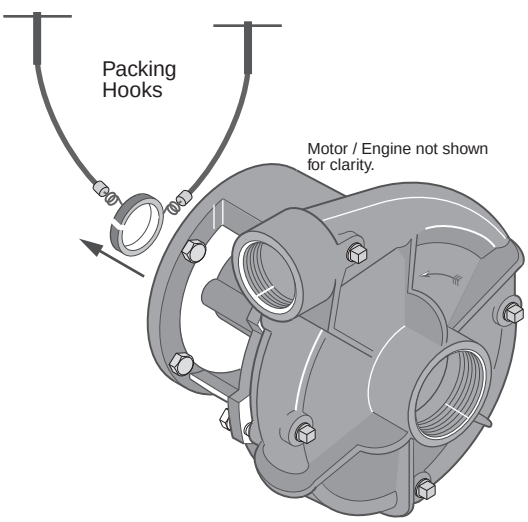


- Remove packing rings from Stuffing box using two commercially available Packing Hooks as shown.
- Slide Lantern Ring (if used) back to expose any remaining rings, including metallic. Remove them in the same manner.

## Installing New Rings

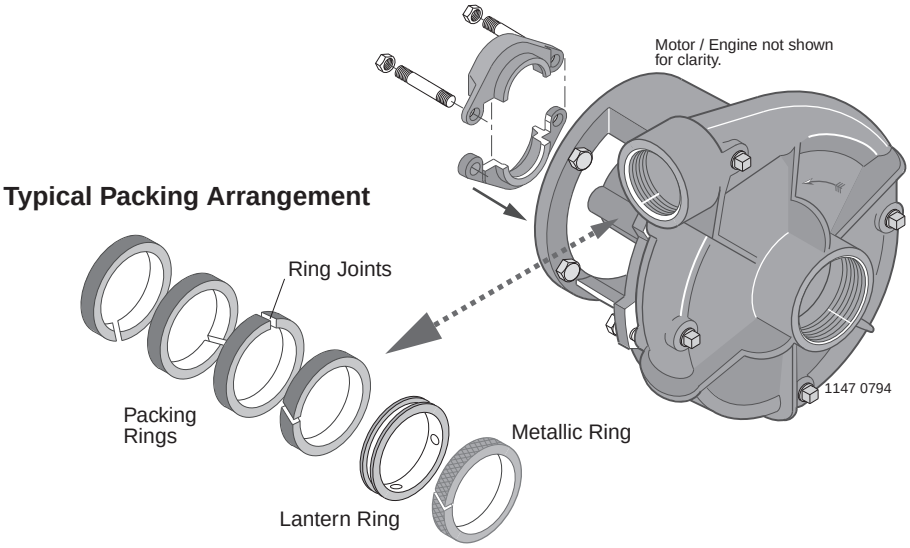


- Clean shaft sleeve and Packing Gland.
- Inspect shaft sleeve for wear, replace if needed.
- Install new packing rings in stuffing box by placing over shaft sleeve and pushing them in as far as they will go.
- Rotate ring joint 90 degrees when installing each ring as shown.
- Slide packing gland into position, then gently and evenly tighten nuts to force rings into place and seat (do not overtighten). Loosen nuts again to hand tight.
- Start primed pump and allow packing to leak liberally.
- Tighten gland nuts one complete turn each until leakage is reduced to 40 to 60 drops per minute.

# Mechanical Shaft Seal

**Models B4ZPBH, B5ZPBH, B6ZPBHH. All other models turn to Page 22.**

## Removal

**1**

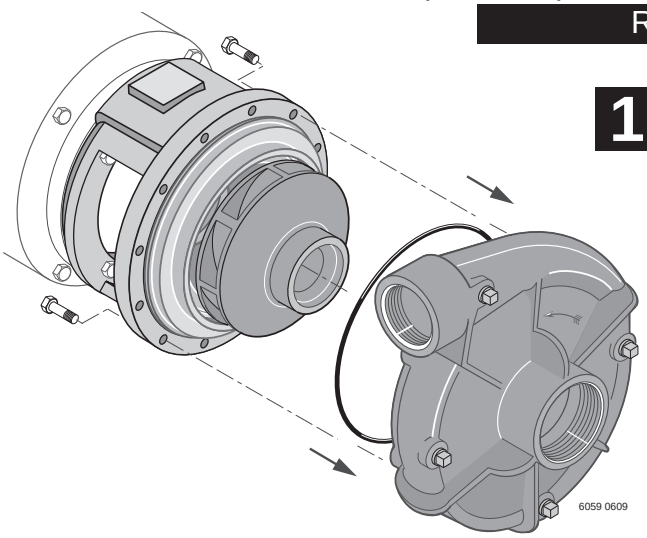


- Unfasten hardware holding volute to bracket.
- Remove volute to expose impeller.

**2**

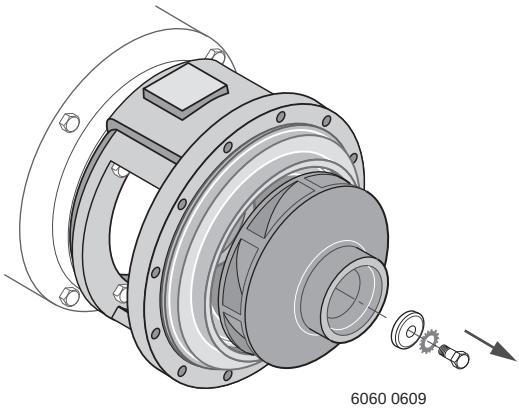


- Peel off old gasket or O-Ring and discard.
- Hold impeller stationary and remove impeller screw and associated hardware.

**3**

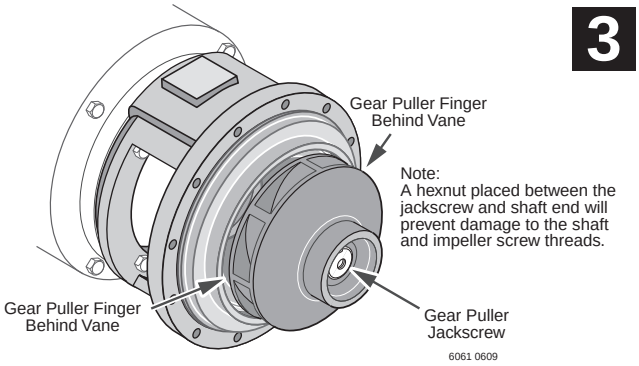


- Install a standard gear puller to shaft end and impeller, placing puller fingers behind impeller vanes as shown.

**4**

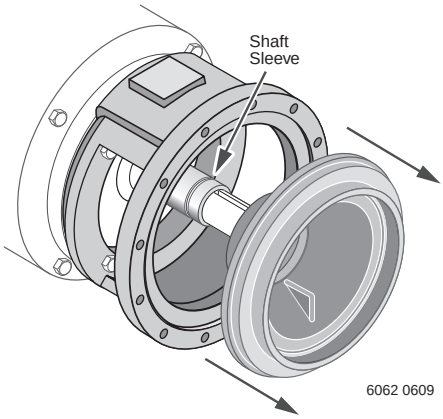


- Rotate gear puller jackscrew until impeller clears shaft. Remove shaft key.
- If a seal retaining ring is part of the assembly, remove it.
- Pull seal plate out of bracket. Mechanical shaft seal will come off with seal plate.

**5**

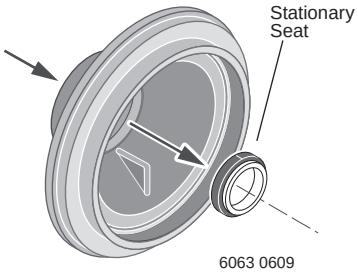


- Push stationary seal out of seal cavity from the back of seal plate.
- Clean seal cavity in seal plate thoroughly.

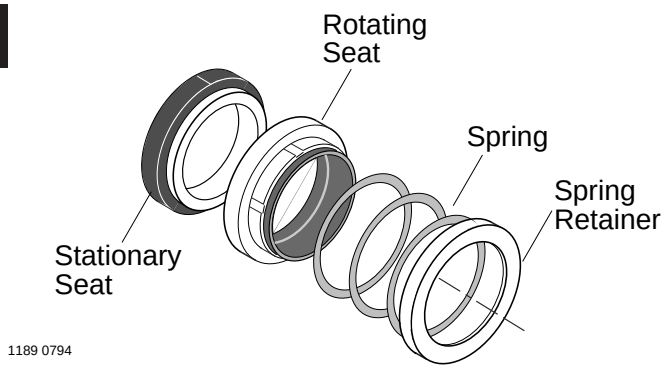


**Procedure and parts will vary slightly depending on pump style.**

# Mechanical Shaft Seal

**Models B4ZPBH, B5ZPBH, B6ZPBHH. All other models turn to Page 23.**

## Installing New Seal

**1**

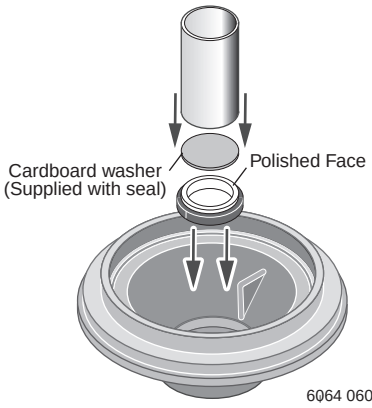


Do not scratch or chip polished ceramic face. Also . . .do not touch polished surface

- Place seal plate on a smooth, flat surface, pump side up.
- Apply a small amount of mineral oil to O-Ring on stationary seal and press into seal cavity. Cover ceramic face with cardboard washer and press straight in using a piece of pipe or tubing.

**2**

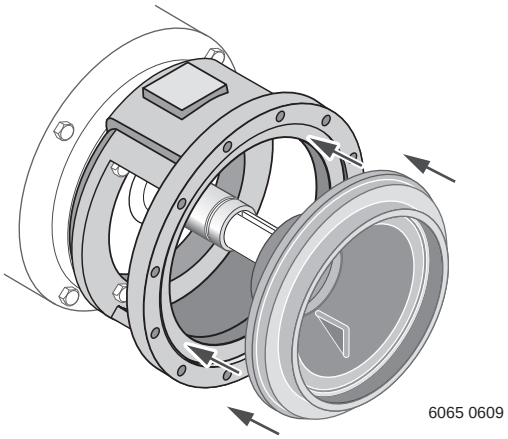


- Reinstall seal plate in bracket using extreme care not to scratch or chip ceramic face of seal with shaft.

**3**

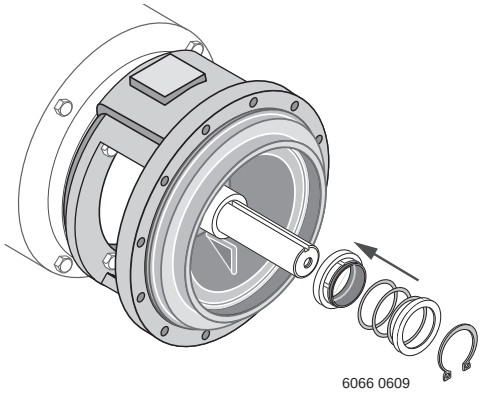


- Apply a small amount of mineral oil to inside diameter of rubber ring in rotating seat and outside of shaft sleeve. Slide rotating seat onto shaft, polished face first, until it is tight against ceramic face.
- Compress seal spring and install retaining ring in shaft sleeve groove (if used).
- Place impeller key in motor shaft keyway. Slide impeller on to shaft as far as possible.

**4**

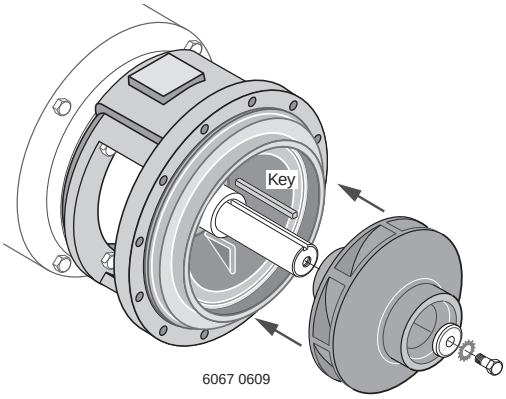


- Clean threads thoroughly.
- Apply non-permanent thread adhesive to impeller capscrew and shaft threads.
- Install impeller washer, shakeproof lockwasher, and capscrew.

**5**

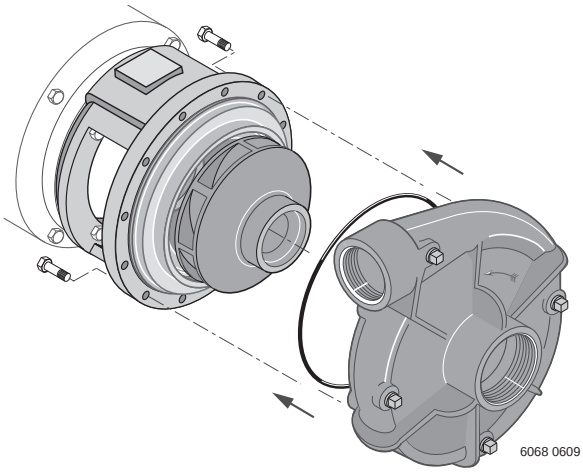


- Install gasket and volute on bracket. Use a new gasket or O-Ring when reassembling to prevent leakage ( a coat of grease on gasket will aid in future disassembly and maintenance).
- Apply anti-seizing compound to capscrews and tighten securely.

**Procedure and parts will vary slightly depending on pump style.**

# Mechanical Shaft Seal

## Removal

**1**

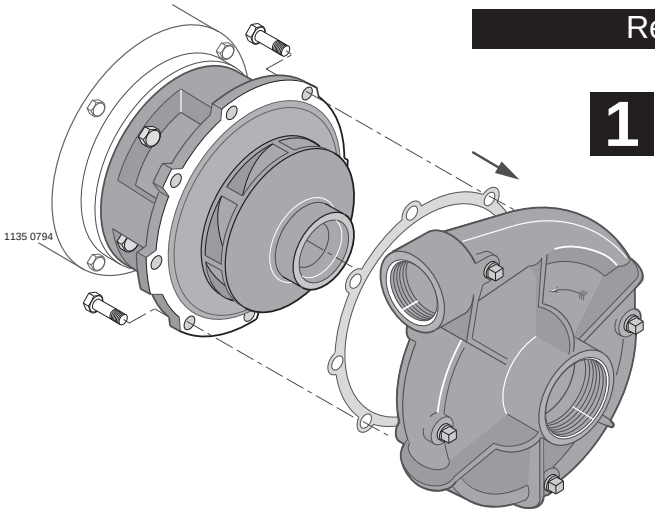


- Unfasten hardware holding volute to bracket.
  NOTE: For model B4EY, consult factory for special instructions.
- Remove volute to expose impeller.

**2**

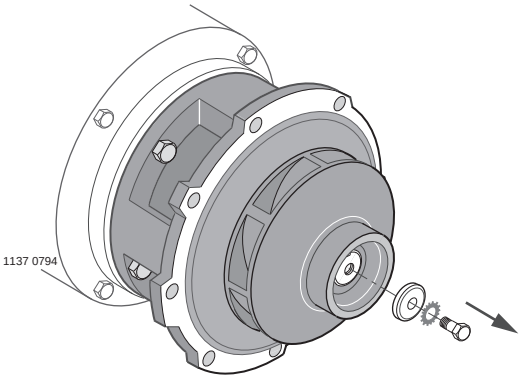


- Peel off old gasket or O-Ring and discard.
- Hold impeller stationary and remove impeller screw and associated hardware.

**3**

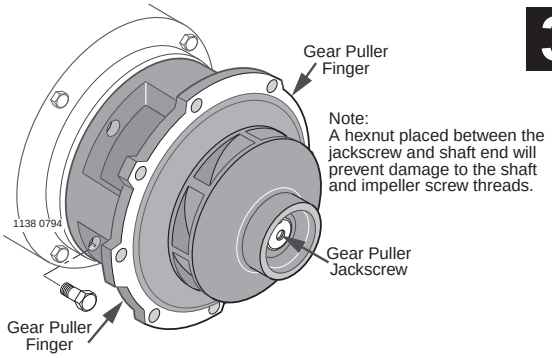


- Remove capscrews holding bracket to motor.
- Install a standard gear puller to shaft end and motor bracket placing puller fingers in the area shown.

**4**

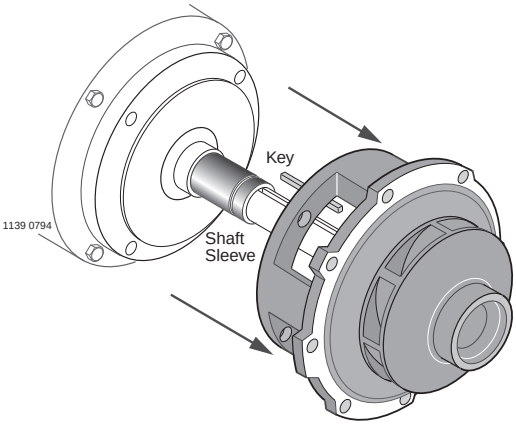


- Rotate gear puller jackscrew until impeller clears shaft. Mechanical shaft seal will come off with motor bracket.
- If a seal retaining ring is part of the assembly, it will need to be replaced.

**5**

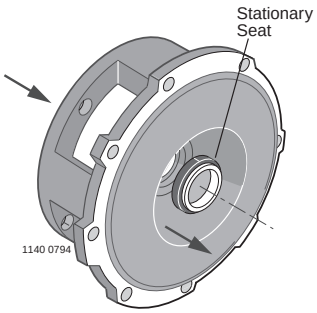


- Push stationary seal out of seal cavity from the back of bracket.
- Clean seal cavity in bracket thoroughly.

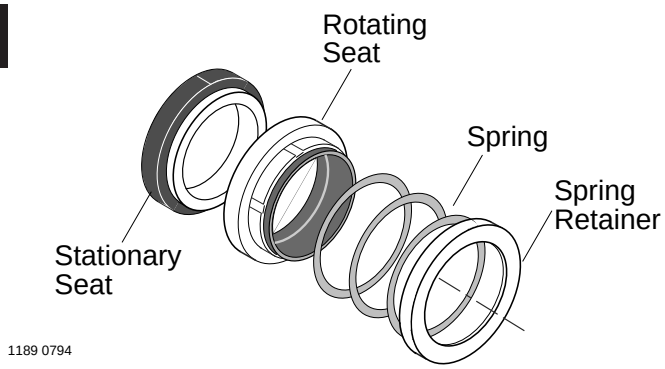


**Procedure and parts will vary slightly depending on pump style.**

# Mechanical Shaft Seal

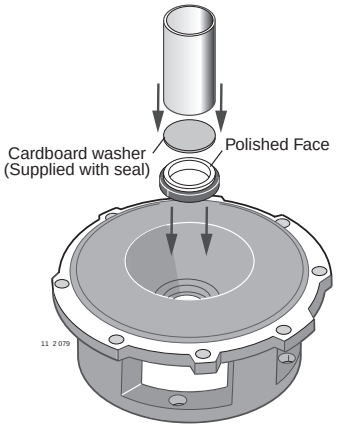


**1**

Do not scratch or chip polished ceramic face. Also . . .do not touch polished surface

**2**

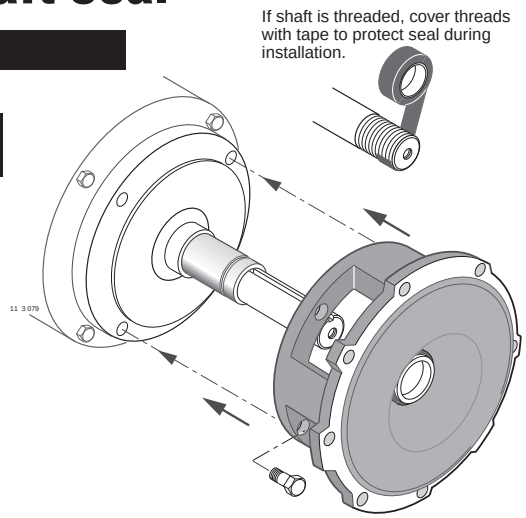


- Place bracket on a smooth, flat surface, pump side up.
- Apply a small amount of mineral oil to O-Ring on stationary seal and press into seal cavity. Cover ceramic face with cardboard washer and press straight in using a piece of pipe or tubing.
- Reinstall bracket on motor using extreme care not to scratch or chip ceramic face of seal with shaft.

**3**

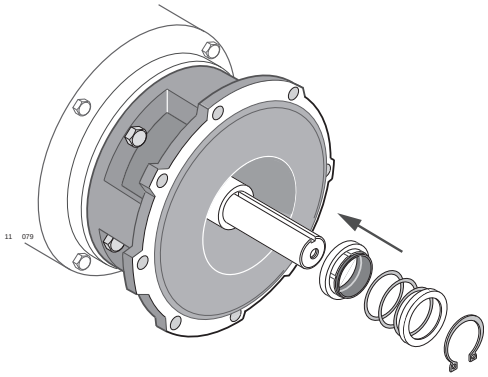


- Apply a small amount of mineral oil to inside diameter of rubber ring in rotating seat and outside of shaft sleeve. Slide rotating seat onto shaft, polished face first, until it is tight against ceramic face.
- Compress seal spring and install retaining ring in shaft sleeve groove (if used).
- Place impeller key in motor shaft keyway. Slide impeller on to shaft as far as possible.

**4**

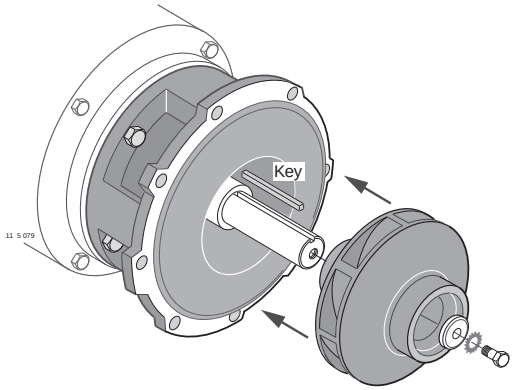


- Clean threads thoroughly.
- Apply non-permanent thread adhesive to impeller capscrew and shaft threads.
- Install impeller washer, shakeproof lockwasher, and capscrew.

**5**

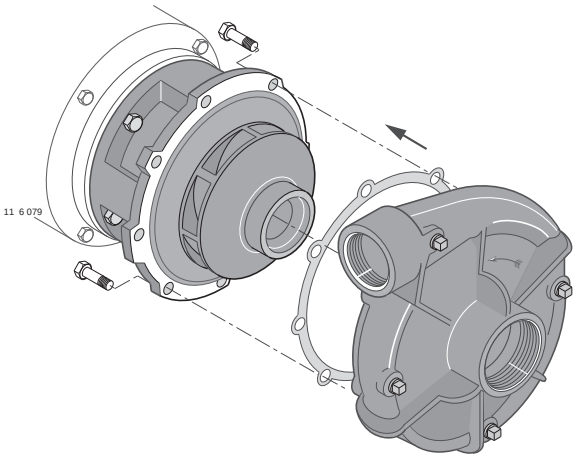


- Install gasket and volute on bracket. Use a new gasket or O-Ring when reassembling to prevent leakage ( a coat of grease on gasket will aid in future disassembly and maintenance).
- Apply anti-seizing compound to capscrews and tighten securely.

**Procedure and parts will vary slightly depending on pump style.**

## ORDERING REPLACEMENT PARTS:

Locate the Berkeley nameplate on the pump; plate is normally on the motor bracket. Information found on this plate is shown below. To be sure of receiving correct parts, provide all nameplate data when ordering. The **BM (Bill of Material)** number is most important. Write your nameplate information on the blank nameplate below for future reference as nameplates can become worn or lost.

***SAMPLE ONLY***

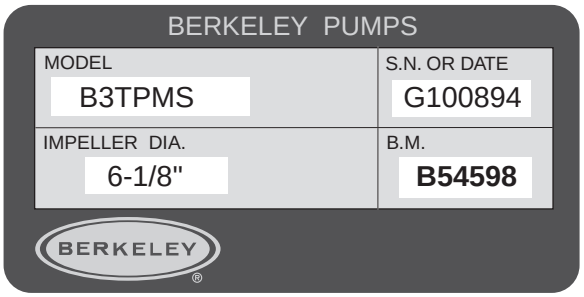


788 0394

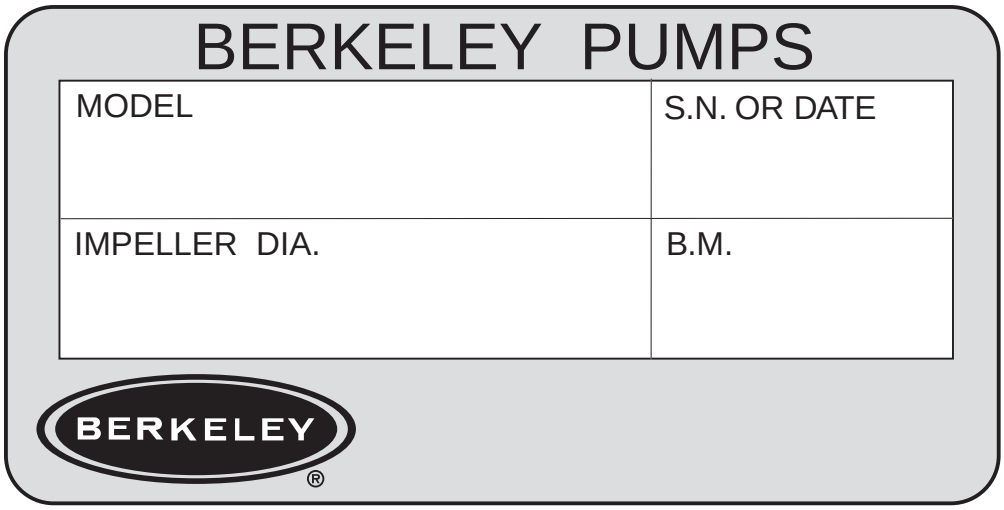


344 1093

Record your nameplate data here.

# Pump Nomenclature

# Electric Motor Drive—with removable seal plate

**Models B4ZPBH, B5ZPBH, B6ZPBHH**

## Mechanical Seal

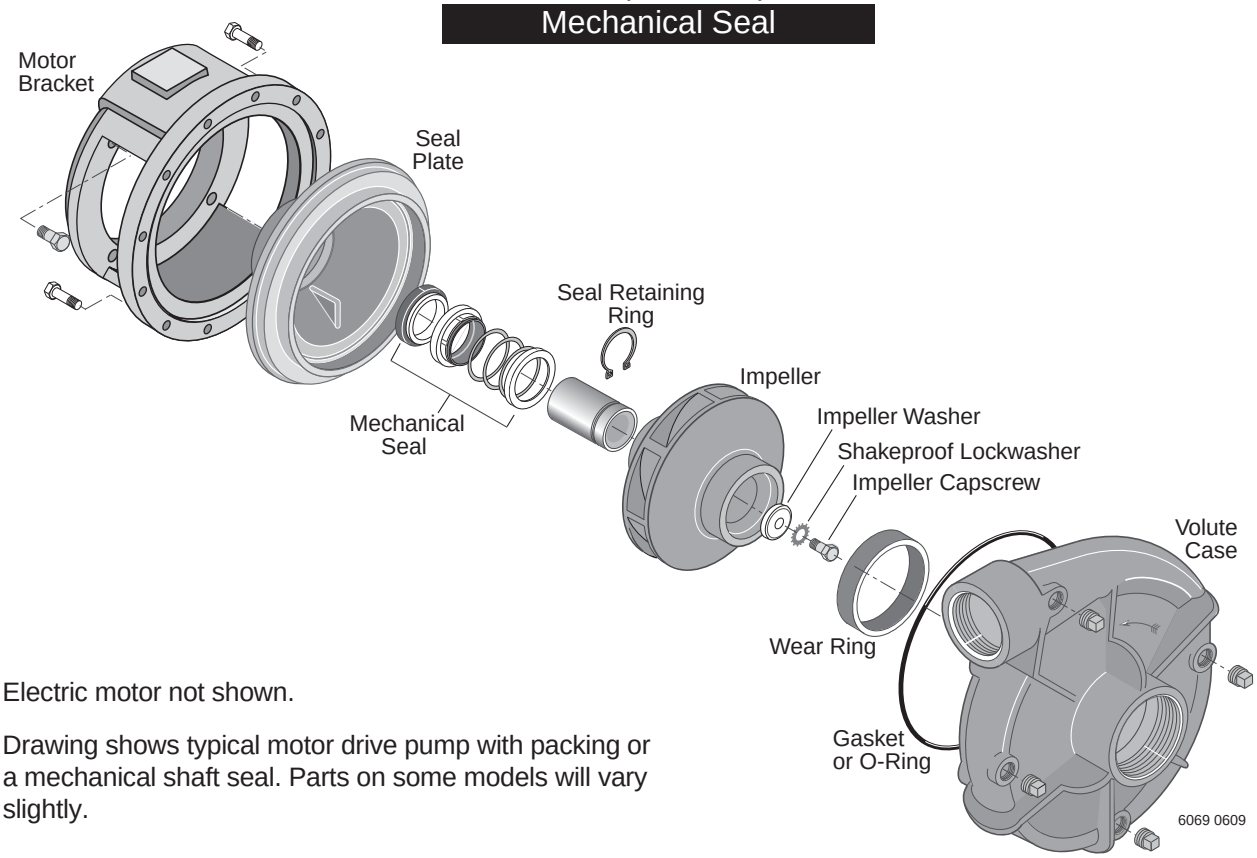


- Electric motor not shown.
- Drawing shows typical motor drive pump with packing or a mechanical shaft seal. Parts on some models will vary slightly.

## Packing

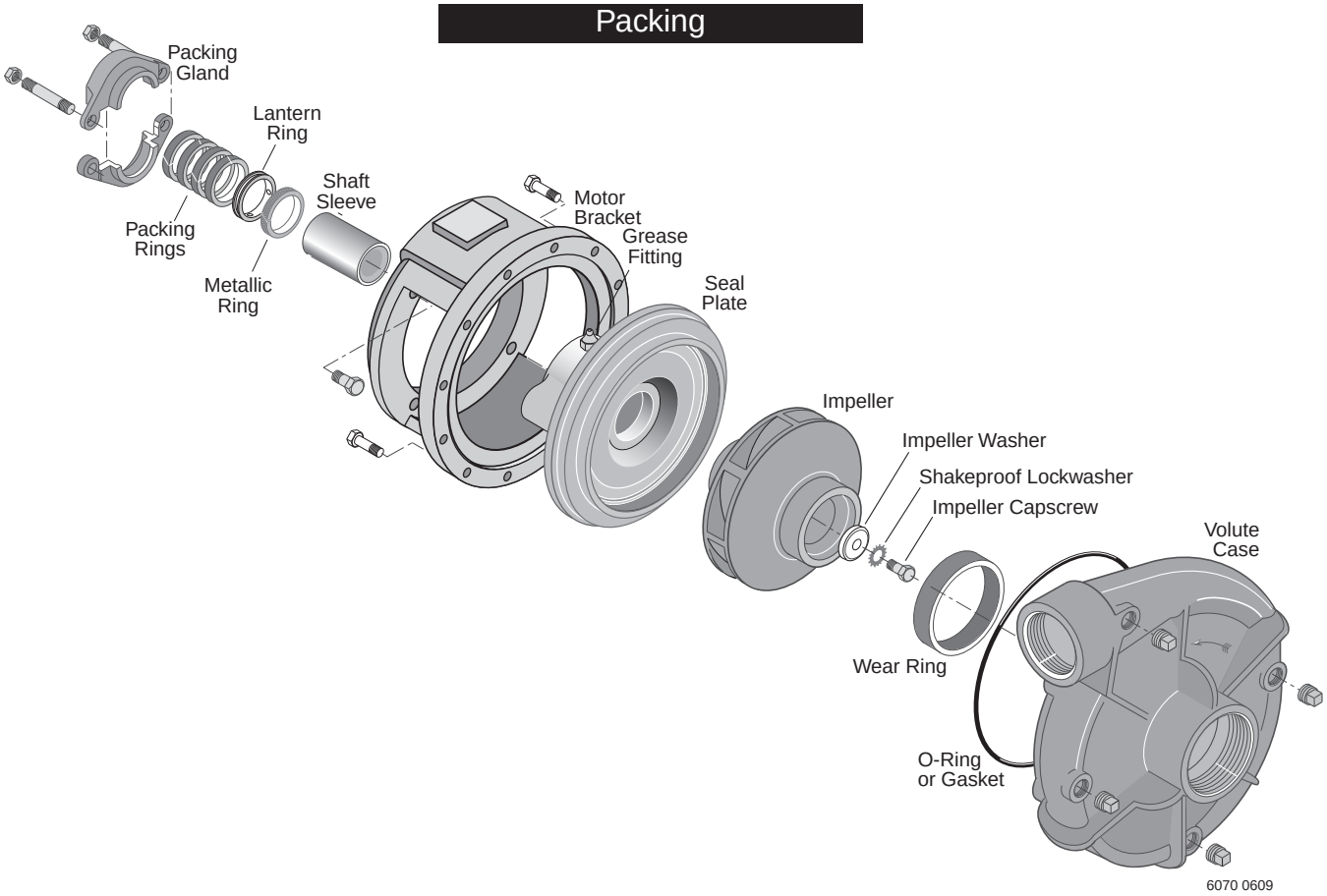

# Electric Motor Drive—with fixed seal plate

## Mechanical Seal

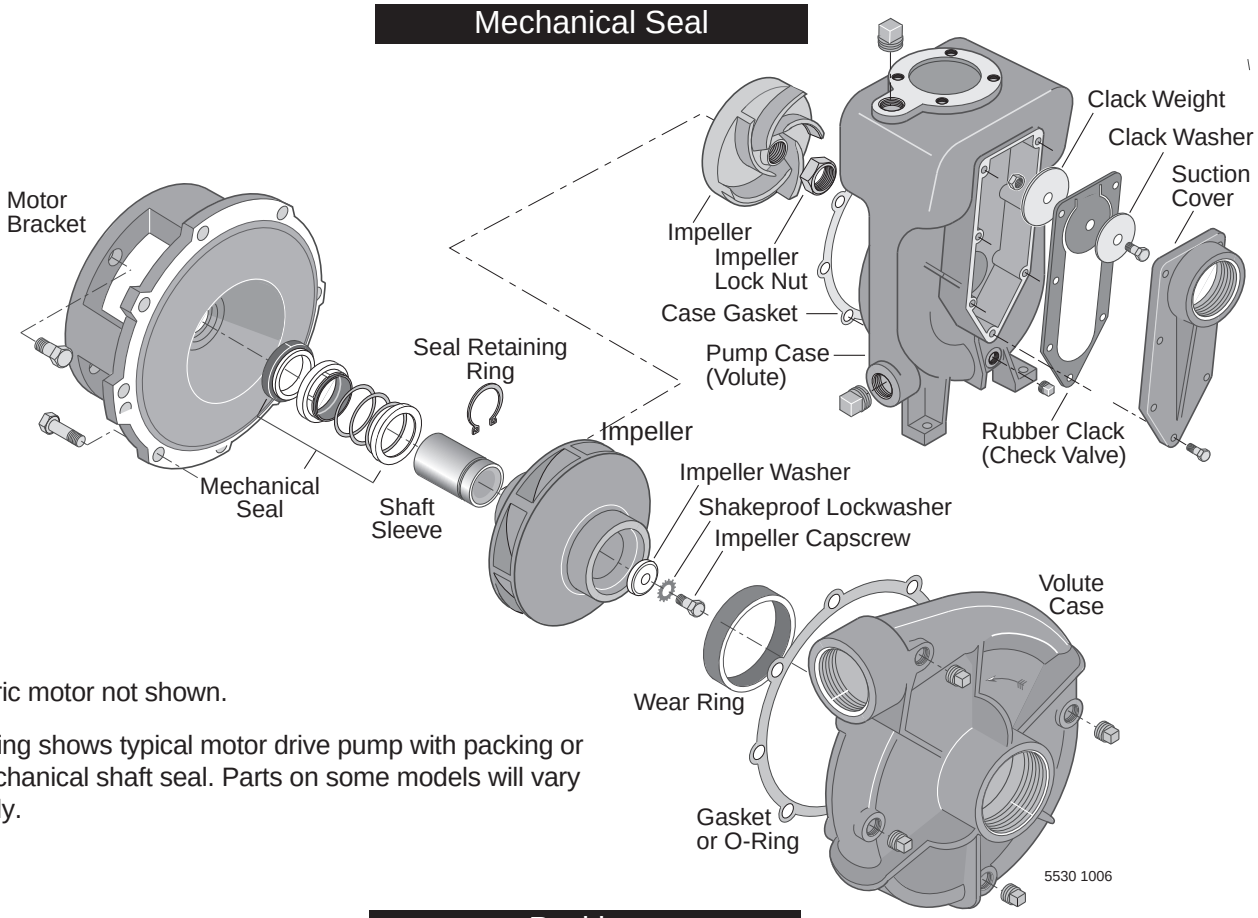


- Electric motor not shown.
- Drawing shows typical motor drive pump with packing or a mechanical shaft seal. Parts on some models will vary slightly.

## Packing

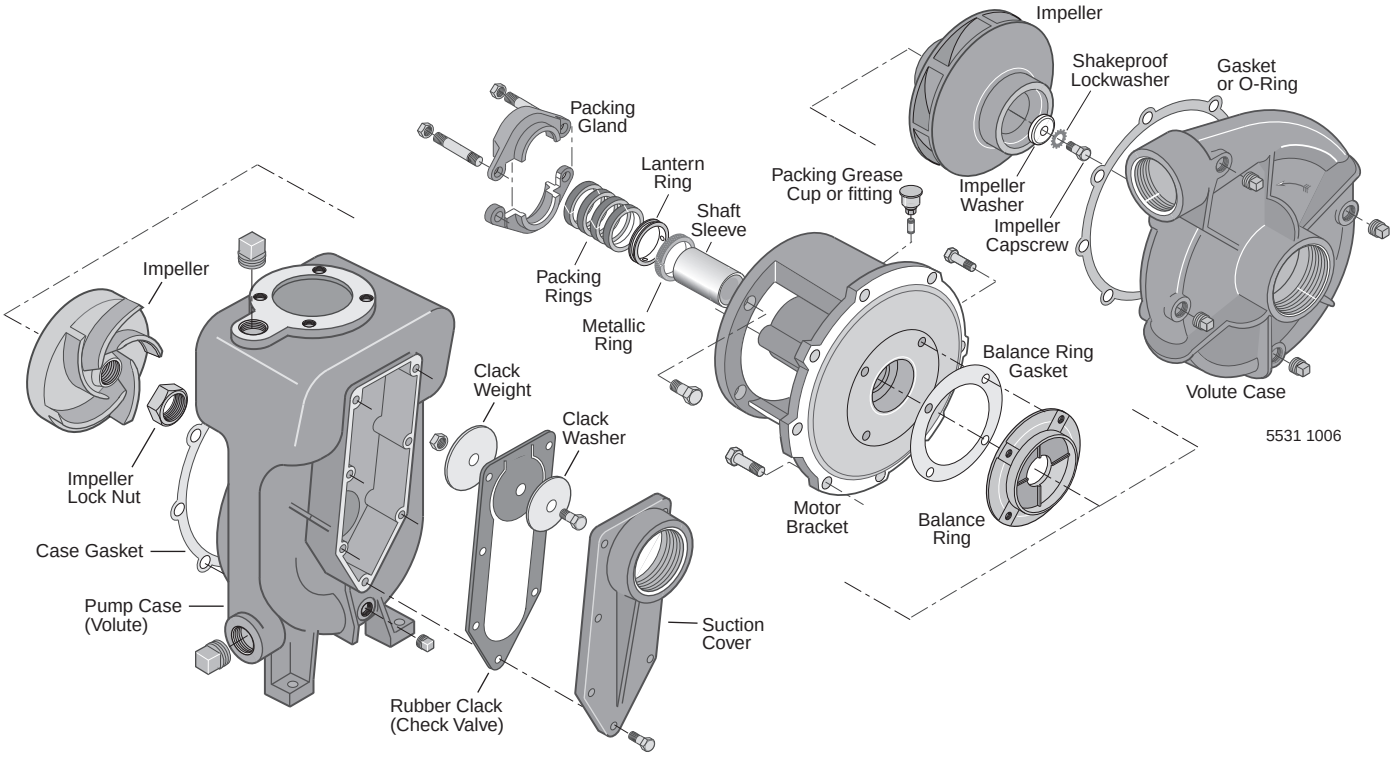

# Troubleshooting

| SYMPTOM | PROBABLE CAUSE | | | | | | | | | | | | | | | | | |
|---|---|---|---|---|---|---|---|---|---|---|---|---|---|---|---|---|---|---|
| | GROUP I ELECTRICAL | | | | | | | | | GROUP II MECHANICAL | | | | | GROUP III SYSTEM | | | |
| | A | B | C | D | E | F | G | H | I | A | B | C | D | E | F | A | B | C |
| Pump runs, but no water delivered | | | | | | | | | | X | | X | | | | X | X | |
| Not enough water delivered | | | X | X | | | | | X | X | X | | X | | | X | X | |
| Not enough pressure | | | X | X | | | | | X | X | X | | X | | | X | X | |
| Excessive vibration | | | | | | | | | X | X | X | | | X | | | X | X |
| Abnormal noise | | | | | | | | | | X | X | X | | X | X | | X | X |
| Pump stops | X | X | X | X | X | X | X | X | | | | | | | | | | |
| Overheating | | X | X | X | | | | | X | | X | | X | X | X | | | X |

| CAUSE | CORRECTIVE ACTION |
|---|---|
| **I. ELECTRICAL** | |
| A. No voltage in power system | Check phase-to-phase on line side of starter contactor. Check circuit breaker or fuses. |
| B. No voltage on one phase (Three Phase Units) | Check phase voltage on line side of starter contactor. Isolate open circuit (circuit breaker, fuse, broken connections, etc.) |
| C. Low voltage at motor | Running voltage across each leg of motor must be ±10% of nominal voltage shown on nameplate. |
| D. Motor leads improperly grouped for voltage | Refer to lead grouping diagram on motor nameplate. |
| E. Control failure | Check control device, starter contactor, H-O-A selector switch, etc., for malfunction. |
| F. Thermal overload switch open | Check phase-to-phase on line side of starter contactor. |
| G. Installation failure | Check motor or windings to ground with megohmmeter. |
| H. Open windings | Check leg-to-leg with ohmmeter. |
| I. Frequency variation | Check frequency of power system. Must be less than 5% variation from motor nameplate rating. |
| **II. MECHANICAL** | |
| A. Flow through pump completely or partially obstructed | Locate and remove obstruction. Refer to Repair Instructions for disassembly. |
| B. Wrong direction of rotation | Reverse rotation of three phase motor by interchanging any two leads. See manufacturer's Instructions for reversing single phase motor. |
| C. Pump not primed | Reprime. Inspect suction system for air leaks. |
| D. Internal leakage | Check impeller for wear of controlled clearances (See Repair Instructions). |
| E. Loose parts | Inspect. Repair. |
| F. Stuffing box not properly adjusted | Adjust gland. |
| **III. SYSTEM** | |
| A. Pressure required by system at design flow rate exceeds pressure rating of pump | Compare pump pressure and flow rate against pump characteristic curve. Check for closed or partially closed valve in discharge piping system. Reduce system pressure requirement. Increase pressure capability of pump. |
| B. Obstruction in suction piping | Locate and remove obstruction. |
| C. Pressure rating of pump exceeds pressure requirement of system at design flow rate | Compare pump pressure and flow rate against pump characteristic curve. Inspect discharge piping system for breaks, leaks, open by-pass valves, etc. If necessary, reduce flow rate by partially closing discharge valve. |

Berkeley

# Warranty

## LIMITED WARRANTY

BERKELEY warrants to the original consumer purchaser (“Purchaser” or “You”) of the products listed below, that they will be free from defects in material and workmanship for the Warranty Period shown below.

| Product | Warranty Period |
|---|---|
| **Water Systems:** | |
| Water Systems Products — jet pumps, small centrifugal pumps, submersible pumps and related accessories | *whichever occurs first:* 12 months from date of original installation, or 18 months from date of manufacture |
| Pro-Source™ Composite Tanks | 5 years from date of original installation |
| Pro-Source™ Steel Pressure Tanks | 5 years from date of original installation |
| Pro-Source™ Epoxy-Lined Tanks | 3 years from date of original installation |
| Sump/Sewage/Effluent Products | 12 months from date of original installation, or 18 months from date of manufacture |
| **Agricultural/Commercial:** | |
| Centrifugals – close-coupled motor drive, frame mount, SAE mount, engine drive, VMS, SSCX, SSHM | 12 months from date of original installation, or 24 months from date of manufacture |
| Submersible Turbines, 6” diameter and larger | 12 months from date of original installation, or 24 months from date of manufacture |

Our limited warranty will not apply to any product that, in our sole judgement, has been subject to negligence, misapplication, improper installation, or improper maintenance. Without limiting the foregoing, operating a three phase motor with single phase power through a phase converter will void the warranty. Note also that three phase motors must be protected by three-leg, ambient compensated, extra-quick trip overload relays of the recommended size or the warranty is void.

Your only remedy, and BERKELEY’s only duty, is that BERKELEY repair or replace defective products (at BERKELEY’s choice). You must pay all labor and shipping charges associated with this warranty and must request warranty service through the installing dealer as soon as a problem is discovered. No request for service will be accepted if received after the Warranty Period has expired. This warranty is not transferable.

BERKELEY SHALL NOT BE LIABLE FOR ANY CONSEQUENTIAL, INCIDENTAL, OR CONTINGENT DAMAGES WHATSOEVER.

THE FOREGOING LIMITED WARRANTY IS EXCLUSIVE AND IN LIEU OF ALL OTHER EXPRESS AND IMPLIED WARRANTIES, INCLUDING BUT NOT LIMITED TO THE IMPLIED WARRANTIES OF MERCHANTABILITY AND FITNESS FOR A PARTICULAR PURPOSE. THE FOREGOING WARRANTIES SHALL NOT EXTEND BEYOND THE DURATION EXPRESSLY PROVIDED HEREIN.

Some states do not allow the exclusion or limitation of incidental or consequential damages or limitations on the duration of an implied warranty, so the above limitations or exclusions may not apply to You. This warranty gives You specific legal rights and You may also have other rights which vary from state to state.

This warranty supersedes and replaces all previous warranty publications.

**In the U.S.: BERKELEY, 293 Wright St., Delavan, WI 53115**

**In Canada: 269 Trillium Dr., Kitchener, Ontario N2G 4W5**