Instruction Manual

Kendro Laboratory Products

SORVALL® Heraeus

Safety Cabinets

Class 2

HERAsafe

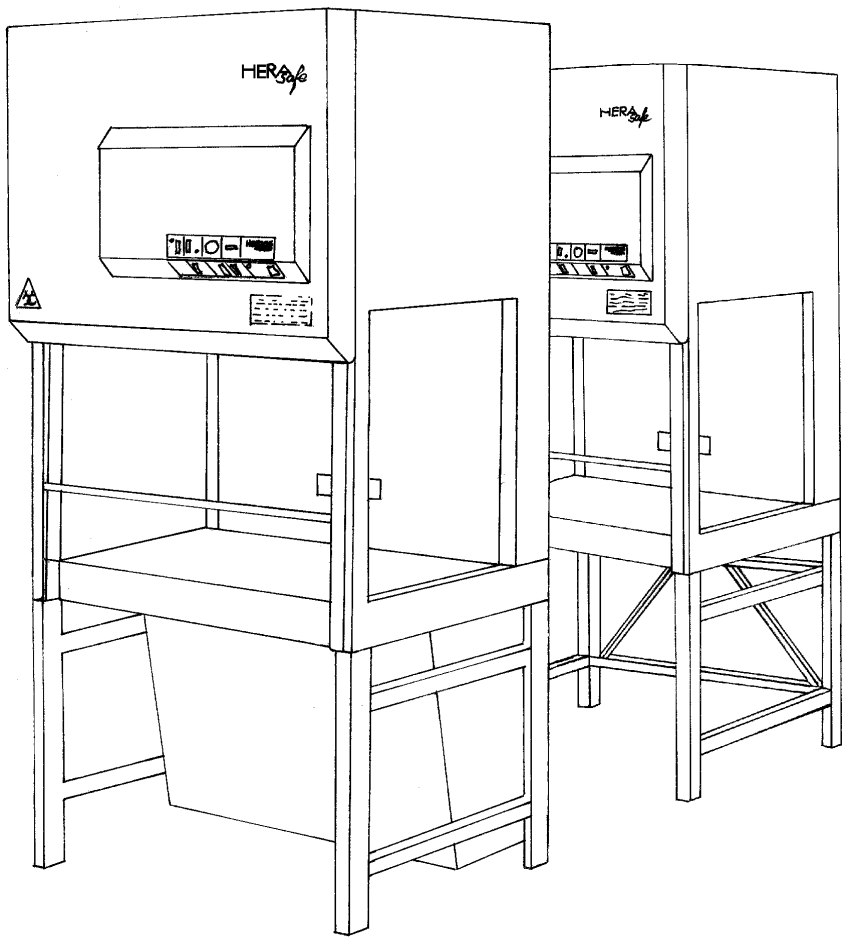

Read these operating instructions carefully and keep a copy near the unit as a reference! Misunderstanding or failure to follow these operating instructions can result in loss of performance, damage to the unit, or serious injury to operating personnel.
Only authorized, qualified service personnel may perform maintenance, adjustment, and repair work on the unit.

Version: 02.1999 50 047 299 c

These operating instructions apply to the following unit equipment levels:	
Model	Equipment
HS	Units with intake protection pre-filters
HSP	Units with HOSCH pre-filters
HSPC	Units with activated charcoal pre-filters
HS. . . ./85	Units with increased interior height

Neither these instructions nor any part thereof may not be reproduced or distributed without the express written approval of Kendro Laboratory Products GmbH.

This version applies to operating instructions for series production safety workbenches.
These operating instructions may be expanded to include accessories.

Various sections of this manual may **only be copied for the internal use of the operator, e.g., for personnel safety and accident prevention training**. **These sections are indicated in the contents.**

Kendro Laboratory Products GmbH assumes no liability or responsibility for the suitability of the units for a particular purpose aside from those listed in the section dealing with the unit's areas of application.

We reserve the right to make changes to the content of these operating instructions at any time and without prior notification.

For all translations into foreign languages, the original German version of these operating instructions is binding.

Published: 02.1999

Subject to fee.

Trademarks
HERAsafe ® and the term "Heraeus" are registered trademarks of Kendro Laboratory Products GmbH.

Any other trademarks mentioned are the exclusive property of the manufacturers in question.
© Kendro Laboratory Products GmbH, 63450 Hanau, Germany

	Kendro Laboratory Products GmbH **Postfach 1563** **Heraeusstraße 12 -14** **D - 63450 Hanau**			++ (0 61 81) 35 - 300 ++ (0 61 81) 35 - 5973
The enclosed index contains a list of Kendro partners in your area.				

CONTENTS Page

GLOSSARY **2**
CONTENTS **3**

1. OVERVIEW **4**
Control Panel 4
Explanation of Control Panel Elements 5
Key to Symbols 5

2. NOTES CONCERNING ENVIRONNEMENTAL SAFETY **6**
Disposal of Shipping Packing Material 6
Disposal of Used Equipment 6
Disposal of Used Filter Elements 6
Energy Consumption 7
- Cirrculating air mode 7
- Exhaust mode 7

3. SAFETY NOTES **8**
Stickers 8
Abbreviated operating instructions 8
Safety Notes 8
(SUMMARY EXCLUDED FROM COPYING PROHIBITION WHEN USED FOR SAFETY INSTRUCTION)
Operating Instructions 10
Unit Log 10
Test Chamber Power Sockets 10

4. DEVICE DESCRIPTION **10**
Application Area 10
Unit Construction 11
Operating Principle 12
Safety Equipment 13
- Power switch with key lock (Function Selection Switch) 13
- Air monitoring 13
- Fuel gas shutoff (option) 13
- Front window monitoring 13
- Front window - sealing 13
- UV lock (option) 14
- Lowered working bench (option/accessory) . 14
- Flow interrupter for connection to the laboratory´s ventilation system (accessory) . 14
- Second exhaust filter element (accessory) . . 14

5. SETUP AND INSTALLATION **15**
Transport 15
Setup Location 15
Room Ventilation 15
Setup 16
Spacing 16
Connections 16
- Power supply 16
- Fittings (accessory) 17
- Fuel gas shutoff connection / nnection to external monitoring systems (Option) 17
Sound Dampening 18
Connection to Laboratory Exhaust Systems . . 18

6. OPERATION **19**
Safety check, initial startup 19
- Prior to Startup 19
Starting up the safety cabinet 19
- Work / operating interruptions 19
- UV disinfection mode 20
Working Guidelines 20
Problems 21
Taking the unit out of service 21

7. MAINTENANCE **22**
Routine Maintenance Tasks 22
- Cleaning 22
Replacing Electrical Parts 22
Filter Replacement 22
- General Information 22
- Circulation or exhaust filter replacement 23
- Intake screen replacement 23
- Intake Protection Replacement (HS) 23
- Prefilter replacement (HSP) 23
Authorized Replacement Parts 24
Authorized Accessories 24

8. TECHNICAL DATA **25**
Geometry 25
Weights, Performance 26
Electrical Values 26
Technical ventilation 26
Filter Technology 27
Noise Generation 27
Illumination Strength 27
Ambient conditions 27

1. OVERVIEW

The safety of this unit with respect to persons, the environment, and the material being processed depends to a great extent on the behavior of those working with the unit.
However, even safe operation cannot rule out risk, particularly with respect to the health of personnel.
This residual risk depends on the work being performed in each instance.

These operating instructions contain important information concerning your safety, the setup and installation of the unit, as well as for its operation and maintenance !

Please read these instructions carefully before operating these units. Follow all instructions in order to avoid problems that may result in damage, in particular, in damage to the user's health.

ALWAYS:

Wear protective gear in accordance with any applicable regulations and suited to the degree of risk involved with the task at hand
(clothing, gloves, protective glasses ...).

Implement and follow appropriate hygienic measures.
Each person is responsible for his or her own personal safety and health.

Control Panel

All switches necessary for operation together with all optical and acoustic signaling elements indicating operation and faults are located on the control panel:

Figure 1/1: Control panel

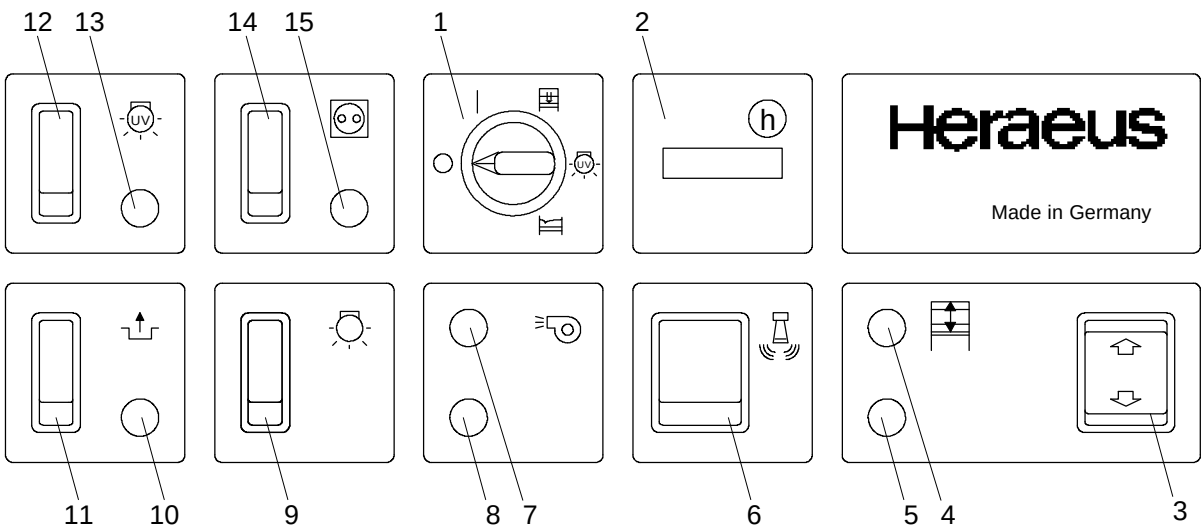

Explanation of Control Panel Elements

Item No.	Symbol	Message / Comment
1	**Power switch / Function selection switch with key lock:**	
	O	Unit OFF
	I	Unit ON: **Operation / Normal setting**
	UV	Unit ON: Operation with UV surface sterilization irradiator (option)
		Unit ON: Close front window (in addition to command key)
		Unit ON: Ventilation OFF, power outlets and interior lighting ready **It is not possible to work safely with pathogenic material.**
Note: The key can be removed and held by the responsible operator, regardless of the switch position, in order to prevent accidental or unauthorized switch use.		

Item No.	Symbol	Signal	Message / Comment
2	h		Hours of operation counter, e.g., for machine log maintenance.
3			Raise/lower front window key
4		White	Window in operating position, **Operation**
5		Red	View port not in operating position, **OPERATION NOT SAFE**
6			Acoustic warning signal response button
7		Green	Ventilation system operating properly, **Operation**
8		Red	Ventilation system **fault**, **OPERATION NOT SAFE**
9			Test chamber light ON / OFF switch
10		Yellow	Release active
11			Release key (option, e.g., release error message system, magnetic valve, etc.)
12	UV		Started timed UV operation timer key (approx. 60 min) (option)
13		Yellow	UV irradiator ON (option)
14			sockets ON / OFF switch
15		white	sockets ON

Key to Symbols

Warnings / Notes / Quality marks	
	Chapters and sections within the operating instructions that are relevant to safety matters are indicated by this symbol.
	Biohazard warning ! On the unit, this symbol warns personnel against accidental use.
	Toxic material warning ! - cytostatic agents - On the unit, this symbol warns personnel against accidental use.
	Note providing information on optimum utilization of the unit.
	Note concerning regulated disposal / reclamation of raw materials.
TÜV PRODUCT SERVICE GS geprüfte Sicherheit	Symbol indicated safety tested in accord. with DIN 12950, Part 10/10.1991 and DIN 12 980. Applies to tested device versions with standard equipment.
	Swiss safety certification seal, awarded by the Eidgenössische Starkstrominspektorat
ДЕ 01	GOST R conformity certification for devices exported to the Russian Federation
CE	EU symbol confirming conformity with all relevant European guidelines (nameplate)

Disposal of Shipping Packing Material

The packaging is designed to protect the unit against shipping damage. Aside from the purely technical aspects of shipping, the packaging materials have been selected with environmental and disposal concerns in mind, and are recyclable.

- The corrugated cardboard employed is made primarily from recycled paper.
- Plastic molded parts (Styrofoam) are free of CFCs.
- Wood frames and pallets are made of recycled wood and are untreated.
- The polyethylene foil (PE) is made from partially recycled material.
- The strapping is made of polypropylene (PP).

Returning the packaging material to the material circuit saves on raw materials and reduces waste. In general, packaging material can be returned to your dealer.
If you will be disposing of the packaging material yourself, please contact your local government for the name of the nearest recycling center.

Disposal of Used Equipment

Prior to their proper disposal, any equipment employed for microbiological work must be thoroughly disinfected and cleaned. An appropriate confirmation of this is to be included with the equipment being disposed of.

Used equipment contains valuable materials. You should not simply take an old unit to the nearest dump or land fill, but should contact your local government department with respect to the required disinfection/cleaning procedures and the possibility of recycling some or all device components and materials.

Disposal of Used Filter Elements

The service life of the filter elements depends primarily on the type of work being performed, the cleanliness of the environment in the are in which the unit is located, and the device construction.

If the filters must be replaced during operation, the type and extent of possible contamination must be considered. Depending on the type and degree of usage, adequate safety measures for the proper disposal of used filters must be in place prior to replacement.

Only you, as the **operator** can determine the type and degree of possible environmental stress, possibly by also referring to the unit handbook.

In cases of microbiological contamination, the filter elements must undergo suitable decontamination measures (sterilization or, at least, disinfection) in order to make them non-hazardous. The proper performance of the selected method is to be confirmed in writing, and this document is to accompany the filter elements being disposed of.

The most widely accepted procedure for this is total room disinfection with formaldehyde vapor, followed by neutralization with ammonia vapor. Follow all applicable federal, state, and local ordinances when carrying out this process (in Germany: TRGS 522).

As a rule, the filters are passivated after this disinfection procedure. There is practically no risk of contamination with filters employed for safety class 1 and 2 work. For filters employed for safety class 3 work, an additional sterilization step by means of autoclaving the broken up filter material may represent an additional, practical measure.

Filters treated in this manner can be viewed as domestic waste and can be disposed of accordingly.

The filters can be disassembled for the separate disposal of the filter medium (residual waste) and the aluminum frames. The modalities of the appropriate disposal methods may need to be separately worked out within the context of overall waste management. For the remainder, all applicable federal, state, and local ordinances must be adhered to (in Germany: BImSchG, AbFG ...)

Contaminated filter elements are always to be treated in the same manner as any other infectious waste generated by the laboratory.

- CAUTION -
Kendro L.P. **warns** against irresponsible surrender of possibly dangerous filter waste to persons without the necessary hazardous waste transport certificates and permits for the disposal of hazardous waste material. **As the originator, you are responsible** for this waste material.

Noncompliance with the regulated procedures for waste disposal may make **you liable** for subsequent damages.

Should you encounter problems in disinfecting - and thus in neutralizing - the filter elements in question, please contact us for assistance.
Our Service Department will be happy to present you with an appropriate offer.

⚠ **If, aside from the microbiological contamination, the filter elements are expected to also contain other contaminants (e.g., chemical, toxic, radioactive ...), appropriate steps must be taken to deal with these prior to disposal of the elements.**

Particularly in the case of filter waste that may contain cytostatic agents, it must be treated as hazardous material and be disposed of accordingly.

☞ **Energy Consumption**

The unit has been designed for **continuous operation** in order to minimize the risk of contamination. The ability of the filters to retain materials is only guaranteed when the unit is operating, that is, when air is flowing across the filter elements.

Once work in the test chamber has been completed, the **front window can be sealed**. The unit then operates in a **power-saver mode** and is practically **silent**.

Since the front window is completely sealed in this mode, it is practically impossible for aerosol materials in the test chamber to be dispersed into the surrounding atmosphere.

In this operating mode and depending on the ambient temperature in the setup area, the safety cabinet's interior temperature may **increase** by up to 10 °C in this operating mode.

► You should therefore never shut the ventilation system off, immediately after completing your work, so that any untrapped material can still be captured. We recommend waiting approx. 20 minutes of run-out or reduced continuous operation.

► If work is to be interrupted for any length of time, always turn the test chamber lights out in order to reduce the unit's energy consumption.

Depending on the agents being processed and their release in the test chamber, you can also **completely shut down** the unit, if it is sealed.

If necessary, surface disinfection of the test chamber should be performed. Follow the instructions concerning **disinfection** in the "MAINTENANCE" chapter.

■ **Circulating air mode:**

To prevent unnecessary increases in the energy required to heat the laboratory area, we recommend operating the unit in the **circulating air mode**. As a rule, laboratories with a safety classification of L 1 and L 2 do not need to implement any additional measures to do this.

For laboratories with a safety classification of L 3, a second exhaust filter (AEF accessory) can provide additional safety against failure. The required accessory part (AEF) can be retrofitted (HS models only). After installing the additional filter, the entire system must be readjusted and re-verified. These are simple procedures.

The second, supplemental exhaust filter can also increase the safety level of laboratories handling cytostatic agents.

The installation of a second, in-line exhaust filter is not required for series HSP units. The standard prefiltration step performs the same function.

■ **Exhaust mode:**

In order to increase safety in case of the failure of the unit's exhaust filter system, the unit can be connected to the in-house exhaust system by means of the recommended accessory parts. The air removed from the overall system must be air conditioned before being returned to the working area.

Please note that the unit's safety suffers when replacement air is fed into the work area. This tends to be the case, particularly where the unit is set up in a small room.

With respect to energy consumption, this mode is less economical than the circulating air mode.

All applicable federal, state, and local environmental ordinances must be observed to operate the unit in the exhaust mode (in Germany: BImSchG).

The adapters required to connect the unit to an in-house exhaust system are available as optional accessories.

STICKERS

The delivery includes a set of stickers.

These stickers - in the appropriate local language - are to be attached to the unit in accordance with the instructions concerning the unit's intended use.

If the unit is used to work with hazardous biological agents, the biohazard warning label is to be attached to the unit.

If the unit is used to manufacture cytostatic agents, DIN 12 980 requires that the attached warning label must also indicate "Cytostatic Agents".

If other hazardous materials are handled whose dangers are not, or not solely, microbiological in nature, additional warning labels or symbols may be required.

ABBREVIATED OPERATING INSTRUCTIONS

☞ Attach the enclosed sticker with the **abbreviated quick instructions** to an appropriate location on the unit.

These abbreviated instructions list the most important start-up procedures, and are intended for the use of trained operators.

⚠ **Their use requires a detailed understanding of the contents of this manual. Under no circumstances are they designed to replace proper operator training or the contents of this manual.**

SAFETY NOTES

⚠ Read the operating instructions carefully before beginning work with the unit in order to prevent errors and resultant damage, particularly to the health of personnel.

In addition, the **abbreviated operating instructions** on the unit must be observed.

The unit may only be employed for its intended purpose, that is, for work with microbiological agents in laboratories with a safety classification of 1, 2, and 3, or for the manufacture of cytostatic agents in corresponding laboratories.
The use of the safety cabinet for any other purpose may present unknown risks and hazards and is not permitted.

The safety checks listed in the "Operation" section must be performed after setup., prior to start-up, after the unit has been moved to a new location, and after filter replacement.

Using these operating instructions as a basis, the operator (company) is to prepare written, understandable instructions in the local language, and tailored to the work to be performed on or with these safety cabinets. These instructions are then to be made available to all employees. This also applies to the disinfection of the safety cabinets.
(Refer to the "MAINTENANCE" chapter.)

In order to minimize the risk of contamination within the company:

- Only the responsible operator may knowingly **turn off** the technical ventilation to the safety cabinet.
- The unit may only be operated by trained and fully instructed personnel
- The covers on the vent openings of the work plate may never be opened.
- The vent opening on the top of the unit may never be covered.
- The unit may never be connected to the power source by an extension cord (this could lead to an accidental power interrupt, resulting in a failure).
- Damage to the housing must not impair the seal to the test chamber and permit the setup area to become contaminated (e.g., damaged windows).

Work in the test chamber is not permitted if there is an optical or acoustic indication of a fault or faults ! Continued work can result in contamination, damage to materials, and health hazards.

During filter replacement, protective clothing and breathing filters/masks suitable to the expected level of contamination must be worn.

Decontaminate used and contaminated filters, or place them in a suitable containers (e.g., bags), seal the containers tightly, identify the containers as "Hazardous Biological Waste" or "Hazardous Cytostatic Waste", and properly dispose of the containers, together with similar waste materials.

Follow the BASIC PRINCIPLES OF WORKING WITH SAFETY CABINETS AND GOOD MICROBIOLOGICAL WORKING PRACTICES in the manual.

In case of damage:
A damaged unit can endanger the safety of the operator and present a hazard to the surrounding environment !
Take all necessary steps to prevent contamination, and immediately shut the affected unit down.

► The safety cabinets conform to the guidelines in DIN 12 950, Part 10/10.1991, Class2.

► The safety cabinets conform to "Type H" devices, as specified in DIN 12 980/1996.

► Beyond this, they meet the requirements of the German Research Group (*Deutsche Forschungsgemeinschaft* = DFG) and the Industrial Professions Cooperatives.

► Requirements:

- Proper installation and initial start-up with appropriate testing;
- Unit repair or replacement of parts in case of recognized damage.
- Disinfection and cleaning in accordance with an appropriate disinfection/cleaning schedule and prior to extensive periods of non-use.
- Regular safety inspections.
  INSPECTION INTERVAL: AT LEAST ANNUALLY.

Any necessary repairs may only be carried out by properly trained specialists. Improper repairs can result in significant hazards to the user and the environment.

The operability and safety of the safety cabinet can only be guaranteed if all necessary inspections, maintenance, and repair work are performed by the Kendro Service Department or by individuals authorized by Kendro L.P..

Follow all applicable federal, state, and local guidelines when setting up and operating the unit.
(In Germany: DIN 12 980; DIN 12950, Part 10, ZH 1/48, ZH 1/119, ZH 1/342, ZH 1/343, ZH 1/598;
GB: BS 5726 Parts 1 to 4; F: NF - X - 44)

The unit's electrical safety can only be assured if it is connected to a properly installed and operated **grounded power supply**.
It is vital that this basic safety requirement is met.

⚠ If in doubt, have the in-house circuits examined by a qualified electrician.

Kendro L.P. cannot be held liable for damages or injuries resulting from a missing or interrupted ground circuit.

To prevent the unit from being accidentally turned off, never use an extension cord to connect it to the mains outlet.

It may be necessary to perform suitable disinfection/cleaning work before beginning maintenance.

Disconnect the unit from the electrical or other power network before beginning maintenance/repair work, and pull the unit's power plug out of the wall socket or remove or turn off the circuit or circuit breaker. Lock the unit out to prevent the power from being accidentally turned on to it. Shut off and lock the gas connection, and secure it.

To prevent static electricity buildup and the hazards associated with it, it may be necessary to connect any supply lines (e.g., gas, water...) to your building's ground circuit.

If flammable materials/solvents are released during work in the test chamber, remember that, after a point that is specific to the material involved, these materials form a flammable, and in some cases explosive, vapor/air mixture.
This mixture can result in fires or explosions.

If such work cannot be avoided, make sure that the release of such materials only occurs if there is adequate ventilation. Releases are to be controlled in such a way that they stay well below the limits with respect to the ventilation/volume flow of the unit and the laboratory ventilation system, as set forth in the regulations concerning primary explosion protection. (In Germany: ZH 1/119, ZH 1/10, EG: EN 1127 Fire and Explosions)

For connections to in-house ventilation systems, care must be taken that the unit's exhaust air does not come into contact with flammable gases.
Observe all relevant federal, state, and local environmental laws and ordinances for connections to the outside air (in Germany: BImSchG ...).

Should there be a longer, unexpected power outage during operation, materials in the safety cabinet should be sealed with appropriate plastic sheeting and tape if decontamination measures cannot be carried out and their is the danger of hazardous material being released.

In order to ensure the stability of the unit, only laboratory benches with an appropriate degree of stability and adequate capacity, or the bases and stands available as accessory parts may be employed.

If in doubt and were the unit is subject to rough treatment, additional anchors should be installed. Suitable wall-mounting hardware is available to prevent the unit from being tipped.

Disinfect all no longer used units and make them unusable by cutting their power cord. Before passing the units on for disposal, remove the front window in order to prevent accidents if the unit is handled by unauthorized individuals such as children.

Carefully file these operating instructions for subsequent reference to safety instructions and other important information.

Please include the model and fabrication numbers from the nameplate in all inquiries and when ordering spare parts.

Operating Instructions

Using these operating instructions as a basis, the operator (company) or an authorized individual is to prepare written, understandable instructions in the local language, and tailored to the work to be performed on or with these safety cabinets. (In Germany: UVV VBG 1.)

This also applies to the disinfection of the safety cabinets. (Refer to the "MAINTENANCE" chapter.).

All affected employees are to receive regular instruction with respect to the safety issues involved in the employment of these units.

Those sections of this manual that may be reproduced (for internal use only) for this purpose are indicated in the contents.

Unit Log

Kendro L.P. recommends the maintenance of a unit logbook.

Test reports, reports concerning maintenance, repairs, relocations, etc., related to the unit are to be documented in this log which may be filed separately from the operating instructions.

Personnel training/instruction activities should also be documented here.

Kendro L.P. recommends filing instructions regarding the biological agents processed in the safety cabinet in the log as well, in order to be able to develop and carry out targeted sterilization/disinfection plans.

A recommendation for such a log is part of the standard device delivery.

Test Chamber Power Sockets

One or, optionally, several 1/PE AC, 230 V power outlets are installed in the rear test chamber wall to connect any necessary tools or instruments.

Power to the outlets can be turned on and off from the control panel.

The outlets are equipped with <u>T 5 A</u> fuses to prevent short circuits or overloads from interrupting power to the unit and thus shutting down the technical ventilation (contamination hazard.)

Thus, the <u>maximum load that can be connected</u> to the secondary outlets is <u>1,100 Watts</u>.

A higher level of protection may endanger the selectivity of the unit's internal protection with rag-

ard to the protection offered (by the customer) by a T 16 A fuse.

This places the microbiological effectiveness in question. If in doubt, provide a dedicated connection. Under no circumstances (e.g., in case of fuse replacement) may a higher level of protection be provided.

If more power is required for instruments/tools, the unit can be correspondingly retrofitted. In this case, a dedicated connection must be provided.

Application Area

The safety cabinet in accord. with DIN 12 980 / 1996 for the manufacture of cytostatic agents and, in accord. with DIN 12950, Part 10/10.1991, Class 2, for microbiological and biotechnology work, is a laboratory device that:

- Protects both the operator and the environment against hazardous influences of suspended materials generated during experiments, to the currently, technically possible extent when all procedures to the individual cases in question are observed. To this extent, it is also a piece of protective equipment.
- Depending on the individual instance, contributes to as few damaging environmental influences as possible impacting the experiment. The protection offered in this respect must be established during the planning stage of the experiment.

As a rule, the safety cabinets are suitable for setup and operation in the following areas:

- In laboratories performing microbiological and microtechnology work;
- In pharmacy laboratories;
- In medical/microbiological laboratories in accord. with DIN 58956;
- In laboratories in the central areas of clinics and hospitals;
- In laboratories with safety classifications of L1, L2, and L3[1) 2)].

Only organisms in accord. with safety levels L1, L2, and L3 [2)]) may be processed in the safety cabinets.

[1)] Possibly in conjunction with additional measures.

[2)] GILSP, C1 and C2 in accord. with OECD, UK e.g., GILSP, C1 & C2 [Biosafety level 1, 2 & 3])

Follow all applicable federal, state, and local ordinances with respect to setup (e.g., in Germany: ZH 1/342, ZH 1/343, ZH 119; GB: BS 5726).

The safety cabinets provide no protection against hazardous gases or vapors.

Processing gases or agents whose vapors are flammable in conjunction with air or can form a **hazardous, explosive atmosphere**, is **prohibited**. Adhere to all applicable federal, state, and local ordinances (in Germany: ZH 1/10).

Where additional, activate charcoal accessories are employed, it must be assumed that the trapped materials are only loosely held and that small amounts are certainly released, at least temporarily.

Unit Construction

Fig. 1/4: Device construction, front view (HSP/HSPC models indicated by cross-hatching)

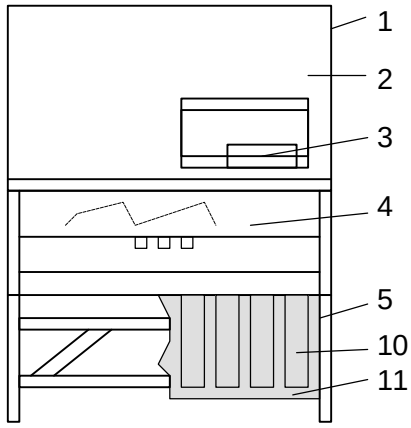

Fig. 2/4: Device construction, side view (HSP/HSPC models indicated by cross-hatching)

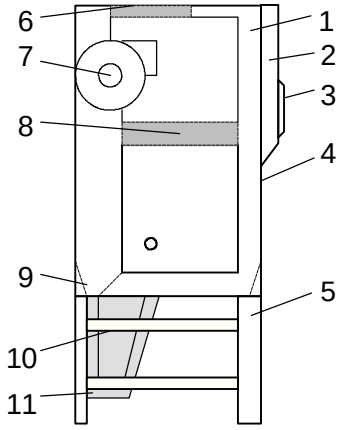

Key to Figure 1/4 and 2/4:

1 Housing
2 Control unit
3 Control panel
4 Front window
5 Base (standard equipment for HSP/HSPC)
6 Exhaust filter
7 Fan
8 Circulation filter
9 Catch tray
10 Prefilter/prefilter element (HSP/HSPC only)
11 Prefilter box (HSP/HSPC only)

Operating Principle

Fig. 3/4: Airflow through the system

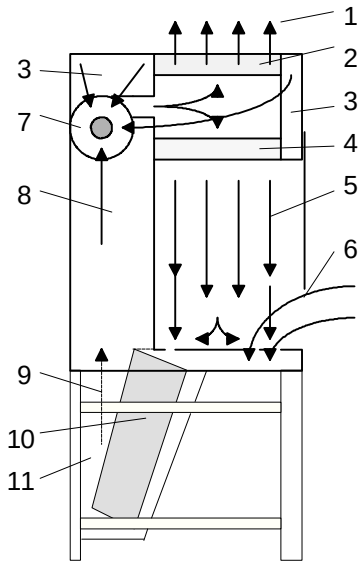

Key to Figure 3/4:

1 Exhaust air stream

2 Exhaust filter

3 Low pressure area

4 Circulation filter element

5 Low-turbulence displacement stream

6 Supply air stream

7 Fan

8 Air channel

9 Prefiltered recirculated air (HSP/HSPC)

10 Prefilter (HSP/HSPC only)

11 Prefilter box (HSP/HSPC only)

The safety cabinet is a laboratory device in whose test chamber a primarily low-turbulence (laminar) positive pressure displacement flow of air passed through high-performance, suspended particle filters is maintained. The exhaust air is also passed through high-performance, suspended particle filters.

The quality of the employed filter elements depends on the purpose for which the unit is being used. Basically, only selected filters of the highest quality are to be employed. For more detailed information, refer to the chapter, "TECHNICAL DATA".

All channels and areas in the unit's interior that carry air and are in contact with the surroundings are under lower pressure than the laboratory area (low pressure encapsulation).

This minimizes the risk of contamination from unknown leaks in the unit housing.

⚠ **If the exhaust filter is leaking or damaged, microbiological agents that were released as aerosols into the test chamber can be released into the setup are.**

This can result in hazards - particularly health hazards - for employees due to the release of pathogenic bacteria.

A damaged or leaking circulation filter element can enrich any existing releases in the test chamber, possibly resulting in contamination of the agents being processed.

To a great extent, contamination cannot be expected to occur if a prefilter is damaged or leaking (HSP models). The selected, particularly safe construction used here minimizes residual risks, but does not eliminate them.

To keep these residual risks to a minimum, the cited minimum inspection intervals must be adhered to.

Refer to the instructions in the chapter, "MAINTENANCE".

Safety Equipment

► **Power switch with key lock (Function Selection Switch**)

In order to minimize the risk of contamination, the unit - from a technical ventilation aspect - is designed for continuous operation, and is equipped with a power switch with a key lock.

Activation of the power switch assumes that only authorized persons will consciously turn the unit on.

The use of a key allows the operator to protect defined functions/modes by removing the key, thus preventing accidental or unauthorized operation of the unit. The key can be removed in any switch setting.

► **Air monitoring**

The circulating and exhaust airflows are continuously monitored.

Problems in any of the flows will initiate optical and acoustic alarms. The monitoring function performs a self-test (monitoring of the system at rest) when the unit is switched on. The optical and acoustic alarms will only turn off if this test is successful.

- If the unit signals a persistent problem with the airflow (RED light on):

  Immediately stop all work in the test chamber, perform the required disinfection procedures, and inform the maintenance department of the problem.

Objects in the test chamber must not cover the vent openings. Do not cover the front vent opening with your arms while working with material in the test chamber (useful accessory: armrests).

Make sure the exhaust openings on the top of the unit are not covered.

► **Fuel gas shutoff** (option)

If the unit is equipped with a fuel gas connection, an additional magnetic valve that closes when there is no current can be installed in the in-house gas line or directly on the outside of the gas connector to provide a secondary shutoff. (Accessories: magnetic valve and connection for an external monitoring system)

If the unit's ventilation fails, a signal/contact is generated by the safety cabinet, shutting off the fuel gas supply.

This same lock can also prevent fuel gas from being accidentally released when the power to the unit is turned off (power switch position "O").

Working with released fuel gas is then only possible if the unit's technical ventilation system is operating properly. A reset switch returns the system to its operating mode after the safety equipment has been activated.

Only laboratory-grade safety Bunsen burners may be used in the unit.

⚠ **Operating Bunsen burners in the test chamber should also be linked to a lock-out with the laboratories ventilation system**

When using Bunsen burners, please note that the unit's technical ventilation is disturbed to such a degree that the safety margin generally provided by the ventilation system no longer exists. The release of hazardous materials should be avoided while Bunsen burners are being used.

► **Front window monitoring**

Work may be only performed in the test chamber if the white light is on, indicating that the front window is in the proper position.

The defined degree of opening should be inspected. The safety of the unit when the window is open to any other degree depends on the quality of the ventilation conditions.

An optical and acoustic alarm indicate that the front window is not in its proper position.

► **Front window - sealing**

In order to seal the front window if work with the safety cabinet is interrupted, it can be completely closed by selecting the "sealed" setting on the keyswitch and pressing the corresponding key.

- Standby mode:

In this mode, the safety cabinet can be used as long as desired without requiring disinfection.

This minimizes the risk of releasing microbiological agents from the test chamber into the setup area.

When operating the unit with the front window sealed, the temperature in the unit's interior can become approx. 10 °C higher than the ambient temperature in the setup area.

► **UV lock** (option)

A UV irradiator (accessory) can only be employed in the test chamber if it is consciously selected with the keyswitch (special tool setting of the power/mode selection switch), and the front window is sealed.

The standard panes are normally adequate to protect the user from dangerous UV radiation.
Do not, however, look directly at the irradiator or, if necessary, wear protective glasses/goggles.

► **Lowered working bench** (option/accessory)

The lowered working bench is designed so that the preferred "safe" working area within the laminar airflow is defined by a recessed area.

Within this area, experiments can be carried out with the least risk of contamination.

In addition, any accidental spills will be contained before they can flow into the vent openings and from there into the catch tray.

► **Flow interrupter for connection to the laboratory's ventilation system** (accessory)

The exhaust airflow interrupter (type TD or DD, with an additional backflow check flap) can be used to prevent materials from being released into the laboratory if the exhaust filter element fails by guiding the unit's exhaust air through the laboratories own exhaust system to the outside.

This represents an additional level of safety.

Refer to the chapter "SETUP AND INSTALLATION" and the documentation supplied with the accessory parts.

► **Second exhaust filter element** (accessory, for HS models only)

In order to reduce to a tolerable level the residual risk of a release of hazardous aerosols/dust into the setup area in case of a simple failure of the exhaust filter element, the unit can be equipped with a second exhaust filter, installed in line with the original, single filter.

If the unit is retrofitted on site, the ventilation system must be recalibrated.

The second filter element is of the same quality as the original exhaust filter. Here too, the proper airflow is continuously monitored.

Equipped in this manner, the unit can be operated to provide **optimum energy savings**. Conditioned air does not need to be supplied to the laboratory, since the unit can be operated in the circulating air mode.

When the unit is in the standby mode with the front window sealed, the second exhaust filter is also switched to power-save operation.

The second filter is included in the unit's low-pressure encapsulation. Both exhaust filters can be inspected separately.

⚠ **Only tested and authorized Kendro L.P. accessories and original spare parts may be used with the safety cabinet.**

Any other parts may result in uncontrolled hazards and damages to personnel and materials. The use of unauthorized parts carries unknown risks and is to be avoided.

The safety equipment is to be inspected for proper operation at regular intervals, but at least on an annual basis, by properly trained and qualified personnel.

Inspection results are to be noted in the unit log.

⚠ **Follow all applicable federal, state, and local guidelines pertaining to the setup and installation of the safety cabinet.**
(in Germany: ZH 1/119, ZH 1/342, ZH 1/343;
UK: BS 5726; F:NFX 44-201).

After setup, relocation, and filter replacement, all safety-related unit functions must be checked before the unit is started.
This inspection must be performed by a manufacturer-authorized specialist.

Failure to perform the required inspection and release to the extent prescribed can result in significant operational hazards and dangers, particularly with respect to the health and safety of personnel, for which Kendro L.P. cannot be held liable.

Transport

To move the unit, it can be lifted at the locations shown in the sketch below. We recommend the use of transport aids such as wood supports.

Fig. 1/5: Transport aids attachment points

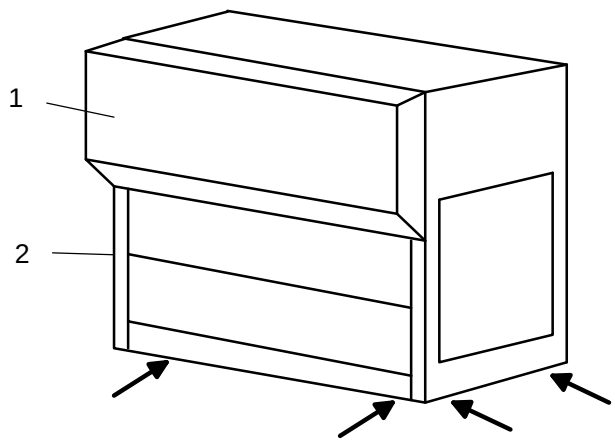

To reduce the unit's depth when moving it, the control unit (1) and the guide rails (2) for the front window can be removed. (Refer to the separate instructions.)

⚠ Damage to the unit during transport can result in a significant reduction in its safety. The unit must be checked by a specialist prior to using it.

Setup Location

Correct, "draught-free" setup of the unit in the laboratory is an essential requirement for safe operation.

Select the setup location so that air moving in front of, or around, the safety cabinet does not negatively impact its ventilation system. The setup location should face away from doors or windows in order to eliminate as much draught as possible. The location should also be selected so that traffic near the cabinet or behind the user is avoided.

Fig. 2/5: Examples of good and bad setup locations in a room:

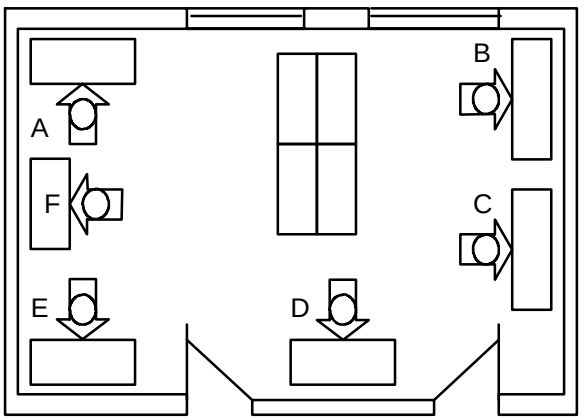

Locations A, E, and F are well selected. Here, neither draughts nor traffic can be expected to affect the unit. Location B is significantly influenced by draughts. Location C is influenced by both draughts and traffic. Location D is also influenced by both draughts and traffic.

The safety cabinet must be set up horizontally on a low-vibration, secure stand, capable of supporting it.

Room Ventilation

The laboratory in which the unit is to be set up must be adequately ventilated. (in Germany: ZH 1/119, ZH 1/392 ...)

This should be a technical ventilation system that exchanges the room air at least 12 times per hour.

Setup

If the unit is set up on a workbench, it should not overhang the bench edges.

If the unit is to be set up as a freestanding device, additional measures to secure it may be necessary.

- When using the optionally available stand: Assemble the stand at the intended setup location and level it. The underside of the cabinet is equipped with openings that fit over the mounting studs on the top of the stand, thus centering the cabinet on the stand. Check the adjustable feet on the stand and, if necessary, adjust them to provide a secure, horizontal base.

Normally, no additional connections to secure the cabinet to the stand are required. Should additional security be desired, mounting brackets that secure the bottom of the cabinet to the base are available. Be careful that the catch tray is not damaged when installing these brackets.

To prevent the cabinet from being accidentally tipped over, additional measures to secure it may be required (e.g., wall mounting, floor mounting).

⚠ **To prevent damage that would impair the unit's safety or operation, additional holes for the installation of wall-mounting hardware may only be drilled in accordance with express instructions provided by Kendro L.P..**

These instructions are available on request.

Spacing

Minimum lateral spaces for any installed hardware must be observed in order to ensure accessibility for installation work.

If several units are to be set up in a row, a minimum distance of 5 - 10 mm between cabinets must be maintained in order to avoid the transmission of vibrations and other factors. To prevent dirt from building up between units, these gaps should be sealed. Use an elastic sealant or grouting material for this.

Before setting up the units in a row, always check that there will be adequate space to access the individual cabinets for any necessary inspection, maintenance, and repair work.

Connections

► **Power supply**

For Austria: The unit may only be connected to an electrical system that meets the requirements set forth in ÖVE - EN 1.

For Switzerland: The unit must be connected to the electrical system via a switch or circuit breaker. Installation must be performed by a qualified electrician, and be in accordance with the SEV guidelines.

Before establishing the power connection, make sure the specifications on the unit's nameplate agree with those of the power supply.

- Required mains protection: circuit breaker or T 16 A fuse.

The safety cabinet is equipped with a permanently installed, flexible power cord.

To prevent contamination, the unit is designed for continuous operation.
The connection to the power supply can be either by means of hardwired connection or a grounded outlet with a cover (to prevent the unit from being accidentally unplugged).

The unit's electrical safety can only be assured if it is connected to a properly installed and operated **grounded power supply**. If in doubt, have the in-house circuits examined by a qualified electrician..

Kendro L.P. cannot be held liable for damages or injuries resulting from a missing or interrupted in-house ground circuit.

To prevent accidental contamination of personnel or the environment, note the following:

- Where the unit is hardwired, the operator must provide main power switch ahead of the connection that permits an all-pole mains disconnection. This switch must be able to be locked in both the ON and OFF position. A suitable main power switch is available as an optional accessory.
- If the unit is connected via a grounded outlet, this outlet performs the above main power switch function. In order to prevent accidental or unauthorized power interruptions, the outlet must lie outside the reach of the unit's operators, and be accessible only to authorized personnel.
- The unit may not be connected to the main via an extension cord.

The unit is designed to be mains-interference-free in accord. with EN 55 014.

► **Fittings** (accessory)

Follow all applicable federal, state, and local technical ordinances pertaining to the establishment of supply connections to the fittings provided on the unit (in Germany: DVGW, Working Paper GW3, etc.).

To prevent static electricity buildup and the hazards associated with it, it may be necessary to connect any supply lines (e.g., gas, water...) and the unit itself to your building's ground circuit..

A voltage compensation connection on the top of the unit and on the base are provided for this purpose.

► **Fuel gas shutoff connection / connection to external monitoring systems** (option)

The connection can be activated/deactivated by the release/unlock key.

The view port must be opened for installation:

- Remove the screws on the left and right of the view port.
- Flip the view port up and lock it in place.
- Carry out the installation.

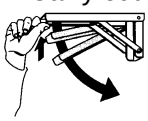

Unlock the restraints on the left and right of the view port holder, swing the view port down and into place, reinstall the screws.

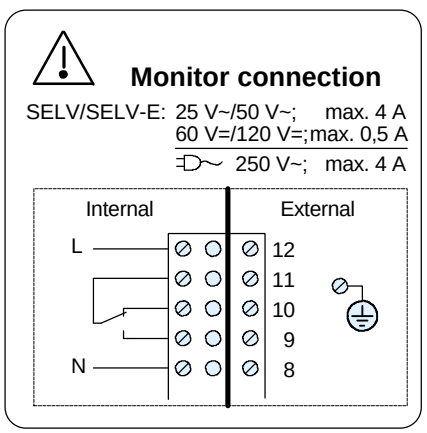

Fig. 3/5: Direct connection of a magnetic gas valve with power supplied (mains power) by the safety cabinet

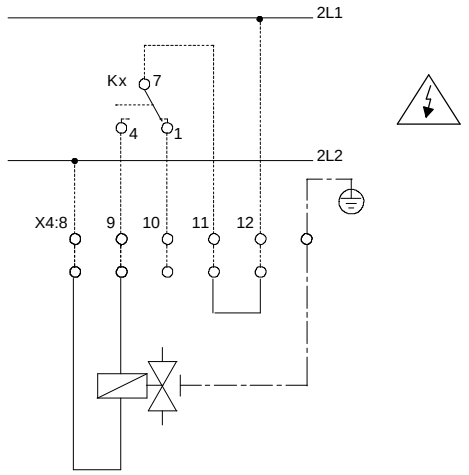

Fig. 4/5: Connection of an external fault alarm system with an external power supply (Example: horn, indicator lamp)

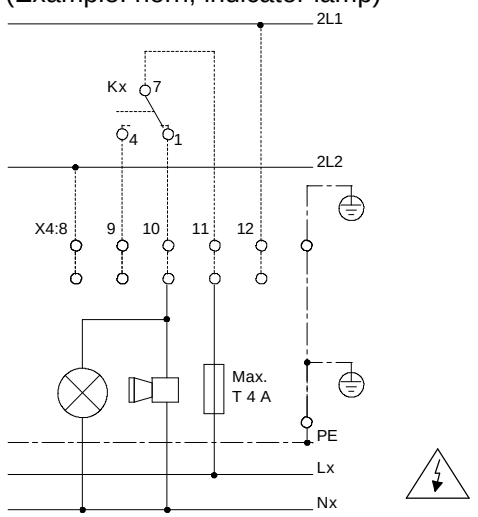

Fig. 5/5: Connection of an external signal processor (central monitoring)

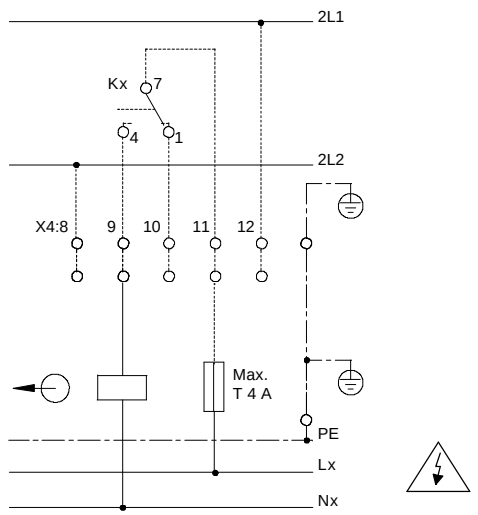

Sound Dampening

Unsuitable setup conditions may result in excessive noise levels.

Additional sound dampening measures may be required in-house to counteract this.

For information concerning noise levels, refer to the chapter, "TECHNICAL DATA".

Connection to Laboratory Exhaust Systems

When the safety cabinet is connected to a laboratory exhaust system, the exhaust air must be removed in a manner that prevents the release of biological agents into the setup area.

In addition, all other applicable federal, state, and local ordinances must be observed.
(in Germany: Federal Emission Protection Laws, ZH 1/342, ZH 1/343)

Under no circumstances may the safety cabinet's own ventilation system be affected
-Contamination risk -.

If a connection to an exhaust system is made, care must be taken that no hazardous airflows arise in the setup area. The quantity of air removed from the setup area by the exhaust system must be replaced. In turn, care must be taken that this does not influence the unit's ventilation.

Fig. 6/5: Application example: connection to exhaust systems

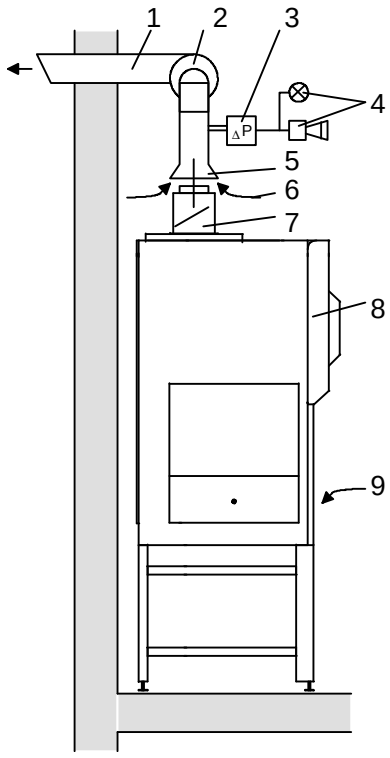

Key to Figure 6/5:

1 Risk-free removal to the outside

2 In-house exhaust fan

3 Airflow monitor

4 Airflow monitor alarm system

5 Airflow interrupt; extraction hood approx. 5 - 15 cm over the cabinet's air outlet

6 Unimpeded fresh air entry for addition to the safety cabinet exhaust air stream

7 Exhaust air collector for connection to exhaust systems (accessories, TD or DD)

8 Safety cabinet (recommended, additional accessories: connection for external monitoring systems)

9 Safety cabinet input air stream

The in-house exhaust air system should be designed so that the air speed through the airflow interrupt will not offer any enough resistance to the air extracted from the unit.

SAFETY CHECK, INITIAL STARTUP

After the unit has been properly set up and installed, a safety check of the cabinet must be performed.

The following represent the minimum inspection requirements:

- The air speed in the working area> 0.4 m/s
- The air speed of the laminar airflow 0.4 m/s ± 20%
- The circulation and exhaust systems must have no leaks.

Only a unit that is operating properly can provide the necessary degree of operator protection and protection against microbiological contamination.

If any operating parameters outside the permissible tolerances are detected, the unit may not be released for work with hazardous agents.

► Prior to startup:

For hardwired units: Turn the power supply on at the main power switch. After turning the switch on, lock it in place (e.g., remove the key to prevent accidental or unauthorized activation).

For plug-in units: Establish a proper, covered mains connection.

Turn the laboratory exhaust system on and check it for proper operation. For this: Turn the laboratory ventilation and exhaust equipment of (if necessary, also open the shut-off damper). The unit may not be started without a fully operational ventilation and exhaust system.

Insert the work panels with the wider rows of openings to the front of the unit.

Figure 1/6: Work panel arrangement
Hang armrests (if used) in the first row of holes.

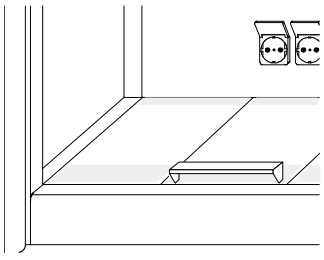

STARTING UP THE SAFETY CABINET

Switch	State
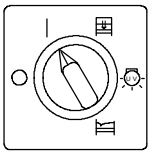	Power switch (keyswitch) = " I ", Operation: After the airflow monitor self-test (approx. 5 - 10 sec.), the green signal lamp indicates that the airflow monitor is ready.
An optical (red indicator lamp) and acoustic alarm will warn problems with the circulation or exhaust air systems or if the front window is not in its operating position. The optical alarm will only go out once the problem has been rectified.	
	The acoustic alarm can be turned off by pressing the acknowledge alarm button.
Place the necessary tools/aids in the safety cabinet and put the front window in its operating position.	
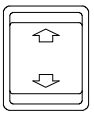	UP/ DOWN button: Raises and lowers the front window. When the front window is in its correct position, the white indicator lamp goes on..
To reduce the risk of contamination as much as possible: Wait approx. 15 to 20 minutes after turning the unit on and setting up the operating position (front window). This will allow the safety cabinet to reach its proper ventilation equilibrium. You can now commence work in the test chamber.	

► Work / operation interruptions

Close and lock the front window.	
Switch	State
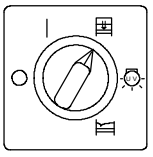	Switch (keyswitch) = close front window & DOWN button: As soon as the front window is lowered, an acoustic alarm will indicate hazards associated with lowering the window. The red indicator light shows that the window is not in its proper position. In the window's home position, the red indicator light also shows that there are now problems with the ventilation.
Front window closed: In this mode, the unit is totally sealed and the risk of releases resulting in contamination has been minimized.	

► UV disinfection mode

Set up the UV irradiator in the test chamber and connect it.

Close the front window	
Switch	State
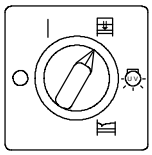	Switch (keyswitch) = close front window & DOWN button: As soon as the front window is lowered, an acoustic alarm will indicate hazards associated with lowering the window. The red indicator light shows that the window is not in its proper position. In the window's home position, the red indicator light also shows that there are now problems with the ventilation.
The irradiator cannot be turned on until the front window is completely closed.	
Turn on the UV mode.	
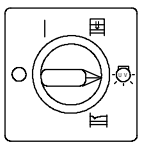	Power switch (keyswitch) = UV: The safety glass traps all harmful UV light. The yellow indicator light and the bluish radiation indicate that the irradiator is operating.

Working Guidelines

Aside from the information previously provided in the "Safety Information" section, please also not the following:

No work may be performed in the test chamber if optical or acoustic alarms are on.

The microbiological effectiveness and safety of the unit depends to a great extent on the proper conduct of the individuals working with the safety cabinet. Follow all applicable federal, state, and local guidelines and the information in this handbook.

☞ Only raise or lower the front window electrically. Manual lifting can result in problems with the window mounting.

Turn the safety cabinet on at least 15 minutes prior to starting work in order for the test chamber ventilation to reach proper equilibrium.

The front window must be in its operating position to ensure safe working conditions.

Always wear appropriate protective gear, e.g., gloves, face protector, and protective clothing. Remove all jewelry.

Disinfect and clean the test chamber surfaces regularly.
Use only lint-free materials to wipe down test chamber surfaces. Always run the ventilator during all disinfecting work. Recommended disinfecting agent: one based on aldehyde, e.g., **Barrycidal 36** [Interchem Products, Hermann Schulthess, Via dei Paoli 25, CH-6348 Minusio (German sales: Handelsvertretung Helmut Schröder, Gaußstraße 30/2, 70193 Stuttgart)].

When using alcohol-based disinfectants, please note: avoid EXPLOSION HAZARDS caused by alcohol vapors in the air. Use as little alcohol as possible. Follow all applicable federal, state, and local ordinances (in Germany: ZH 1/598).

Only place clean, disinfected tools/aids in the test chamber. Limit the tools/aids to a minimum, e.g., no writing utensils, packaging, or similar materials.
If larger objects or aids are placed in the test chamber, the retention capability (personal protection) of the safety cabinet may be impaired. Only set up equipment towards the back of the work surface.

☞ **The uninterrupted airflow through the working openings** of these safety cabinets and the **low-turbulence displacement flow** (laminar flow) in the test chamber **are decisive factors for personal and product protection**.

■ Avoid any negative influences on the airflow while working in the test chamber.

These can be the result of:

- Rapid hand, arm, or body movements both in, as well as in front of the test chamber.
- Covering the air vents in the work panel.
- Large volume objects and equipment.
- Rapidly moving equipment with , e.g., stirrers, etc.
- Heat-generating equipment, e.g., Bunsen burners. If Bunsen burners must be used, employ only safety models.
- Only employ equipment that generates heat if the ventilation system is switched on.

Do not allow filter elements to be damaged by heat sources - Contamination Hazard - .

■ Work interruptions:

If work at the safety cabinet is interrupted, make sure that any contamination by materials released in the safety cabinet is prevented.

Operate the safety cabinet in the standby mode, with the glass window sealed.

- When shutting the unit down:

Remove all objects placed in the cabinet, and disinfect and clean them.

Disinfect and clean the test chamber.

Disinfect and remove any residue in the catch tray and on the work panel.

Cleaning and disinfecting agent residue may be damaging to subsequent microbiological work. As far as possible, ensure that no residue remains.

After disinfecting, run the safety cabinet for at least a further 15 - 20 minutes to trap any released aerosols in the filters.

Problems

If problems occur (alarms are tripped):

Immediately stop all work in the test chamber because of the possibly increased risk of contamination.
Safe working conditions cannot be assured.
Limit the risk of contamination:
Keep the ventilation running.

Possible causes:
- Inadequate airflow (e.g., air vents covered).
- Do not leave the front window in its operating position.
- Too many or large objects in the test chamber.
- Equipment in the test chamber has a great deal of inherent movement or generates a large amount of heat.

If the problem cannot be rectified, inform your maintenance department. Do not attempt to repair the unit yourself.

TAKING THE UNIT OUT OF SERVICE

The unit may only be taken out of service by trained personnel familiar with the operation of these devices.

The safety cabinet must not present any contamination risk after it is taken out of service.

Remove all material, objects, and tools from the cabinet and disinfect and clean them.

Disinfect and clean the test chamber.

Disinfect and remove any residue from the catch tray and the work panel.

Leave the ventilation running during disinfection..
Follow all federal, state, and local health ordinances pertaining to disinfecting.
(In Germany: BSeuG, Federal Health Paper 27, No.3/March 1984.)

Depending on the type of work carried out in the test chamber, disinfect the safety cabinet's interior by means of formalin evaporation. Follow all federal, state, and local health and environmental regulations when doing this (in Germany: TRGS 522).

Continue to operate the safety cabinet for at least 15 minutes after completing disinfection and cleaning.

Switching off:		
Instruction	Switch	State
Close front window.	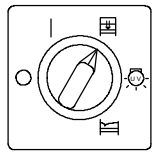	Switch (keyswitch) = Close front window & DOWN button: A window position and ventilation fault alarm is initiated.
Turn the safety cabinet off.	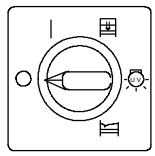	Switch (keyswitch) = O: All operating indicators go out. Remove the key and store it in a safe place.

7. MAINTENANCE

⚠ **The operability and safety of the safety cabinet can only be guaranteed if all necessary inspections, maintenance, and repair work are performed by authorized Kendro Service personnel.**

Maintenance must be performed every 5,000 operating hours or annually, whichever comes first.

The operating time counter can assist in determining the maintenance interval. We recommend concluding a maintenance contract.

Routine Maintenance Tasks

Under normal operating conditions, little is required to maintain the safety cabinet in proper working order.

► **Cleaning**

For cleaning, use only small amounts of commercially available, domestic dish-washing detergent dissolved in water. Abrasives/scouring powders can destroy surfaces. Never clean any glass areas with abrasives or agents that can lead to abrasion.

■ **Daily or weekly, depending on utilization level:**

Disinfect and clean the test chamber.
Remove the work panel(s) and disinfect and clean the areas under the panel(s).
As a disinfectant, we recommend **Barrycidal 36**.

Clean the exterior cabinet surfaces and glass areas with a mild detergent solution of glass cleaner.

Using these operating instructions, perform a functional inspection of the unit's equipment.

Document all work performed in the unit log.

■ **Monthly (or more often, as required):**

Using a lint-free cloth and the above-described cleaners, remove any dust accumulation from the exterior of the unit.

Perform the previously described disinfection of the interior.

Perform a functional inspection and check the safety equipment during normal operation.

Document all work performed in the unit log.

■ **Annually:**

Safety inspection in accord. with locally applicable technical standards, and performed by trained personnel authorized by Kendro L.P..
(in German DIN 12 950, Part 10, DIN 12 980, DIN VDE 0701, etc.)

Check the window drive prestress tension.

Replace the UV radiation element (if equipped with this option).

Document all work performed in the unit log.

■ **Every two years:**

Replace the test chamber light bulbs.

Replacing Electrical Parts

⚠ **All work on the unit's electrical equipment must be carried out by a qualified electrician and with the safety cabinet in a safe condition (power turned off).**

Only original replacement parts tested and authorized by Kendro L.P. may be employed.

The operator's personnel trained in electrotechnical work may replace the test chamber lighting unit, including the starter.

The view port must be opened to access these parts:

- Remove the screws on the left and right of the view port.
- Flip the view port up and lock it in place.
- Replace the faulty parts.

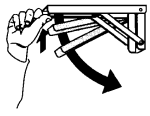

Unlock the restraints on the left and right of the view port holder, swing the view port down and into place, reinstall the screws.

Filter Replacement

► **General information**

Because of the possibility of contamination, filter replacement may be the most serious maintenance task you will need to perform on this device. Aside from a knowledge of the applicable ordinances and standards, detailed knowledge concerning the modalities of the unit in question is vital for this task.

Only **trained and authorized Kendro Service Technicians** can perform this task properly. This is the only way to keep the **contamination risk in the setup area to a minimum**.

⚠ **Only filters tested and approved by Kendro L.P. may be employed. The use of other types of filters carries unknown risks and hazards, and is not permitted.**

Use the prepared, recommended replacement part kits (Proper Use Packages).

Aside from the filters, these contain all required special components.

⚠ The unit's safety and functionality can only be assured if the authorized spare parts listed below are employed.

► Circulation or exhaust filter replacement

Before replacing the high-performance suspended particle filters for circulating or exhaust air, make sure the safety cabinet has been disinfected/decontaminated, and all required tasks can be safely performed.

Where (additional) filter contamination by hazardous toxic or carcinogenic materials exists, protective measures similar to those required for the disposal of asbestos (in Germany: see UVV VBG 113) may be necessary.

- Block off the hazardous area. Seal the work area against aerosol leakage. Connect the entire unit to a suitable low pressure source. Open the filter box. Spray the entire filter with bonding agent and allow the agent to harden. Carefully remove the filter from its installation area. If necessary, break the filter material down inside the protected area and package the pieces for proper disposal. Install the new filter in the reverse order. After closing the filter installation area, remove the seals in the work area.

Fig. 1/7: Application example: Replacing low-contamination filters

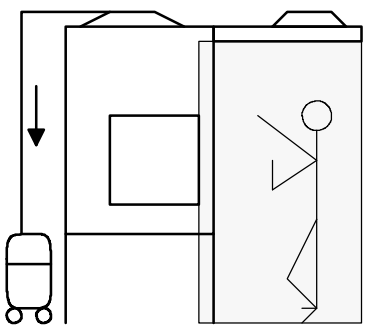

- Protective clothing and a mask with a suitable filter must be worn during this filter replacement.
- Immediately place used, contaminated filters in suitable bags. Seal the bags and mark them as "Hazardous Waste". , Dispose of the bags together with other, similar types of waste.

After filter replacement, perform the inspections in accord. with DIN 12950, Part 10/10.1991 or DIN 12 980.

► Intake screen replacement (HS)

The coarse dust filter and EU 3 filter mat can be replaced without special tools, and are accessible from the work area. Follow these steps:

- Remove the work panel(s). Pull the filter mat off its holders. Clean the non-woven material or dispose of it, as required.
- Place clean or new non-woven material on the holders, making sure that there are no large gaps around the edges. Replace the work panel(s).

► Prefilter replacement (HSP/HSPC)

Replacing the prefilter elements of prefilters in HSP units is a particularly **low-contamination** procedure that can be carried out from the work area, with the unit's ventilation system running. Follow these steps:

- Remove the work panel(s).
- Individually remove the special tape strips from the filter element being replaced to expose the element.
- Seal the filter opening with the special tape provided as part of the standard delivery or in the Proper Use Package.
- Remove the filter element from its holder. Immediately cover the opening left by the filter with the cap provided as part of the standard delivery or in the Proper Use Package. While still in the work area, prepackage the filter element in the covered bag and seal the bag tightly.
  (The covered bag with self-sealing cover can be obtained as an accessory part.)
- Bring the new prefilter element into the work area. Remove the cap and push the prefilter element onto its holders.

  Repeat the above steps for each element until the entire prefilter has been replaced.
- Seal the prefilter elements with the special tape.

After replacing the prefilter, recalibrate the ventilation as required and examine the filter's effectiveness.

Authorized replacement parts and consumables				
Dimensions	9	12	15	18
Parts	Order number			
Circulating air filter	50045133	50045128	50045135	50045130
Exhaust filter	50045132	50045129	50045134	50045131
Prefilter elemrnt for HSP	50046617	50046617	50046617	50046617
Intake screen GF 1 for HS	50047355	50047355	50047355	50047355
Intake screen GF 3 for HS	50047356	50047356	50047356	50047356
Proper Use Pack, primary filter	50045645	50045646	50045647	50045648
Proper Use Pack, prefilter for HSP	50047400	50047401	50047402	50047403
Proper Use Pack activated charcoal filter for HSPC	50051465	50051466	50051467	50051468
Stand	50044284	50044285	50044286	50044287
Subdivided work panel (1 panel)	50046085	50046085	50046085	50046085
Work panel handle	50044365	50044365	50044365	50044365
Test chamber lamp	50043933	50043931	50043932	50043932
UVC irradiator, 15 W	50048537	50048537	50048537	50048537
Fuse for control circuits	56052523	56052523	56052523	56052523
T 5 A fuse, for outlets	50046843	50046843	50046843	50046843
Operating instructions	50048711	50048711	50048711	50048711
Unit log	50048712	50048712	50048712	50048712
Circuit diagram	50049881	50049881	50049881	50049881

Accessories	Order number
Exhaust air fittings with flow interrupters for connections to exhaust systems	50045035
Exhaust air fittings with backflow check flaps for connections to exhaust systems	50045033
Additional exhaust filter, AEF, for installation on HS series units	50047357
Main power switch with ON/OFF position lock (for units being hardwired into the in-house mains)	03002862
Portable UV irradiator	50048696
Magnetic valve to shut off reserve gases	50044664
Covered bag for prefilter replacement in HSP models	50048473
One-piece work panel, AM 6 (0.6 m)	50045643
One-piece work panel, AM 9 (0.9 m)	50045644
One-piece, recessed work panel, AML 6 (0.6 m)	50046087
One-piece, recessed work panel, AML 9 (0.9 m)	50044288
One-piece, recessed work panel, AML 12 (1.2 m)	50044289
One-piece, recessed work panel, AML 15 (1.5 m)	50044290
One-piece, recessed work panel, AML 18 (1.8 m)	50044291
Armrests for ergonomic and safer work	50044976

Figure 1/8: Overview of unit dimensions. Accessory equipment for HSP/HSPC models is indicated by cross-hatching.

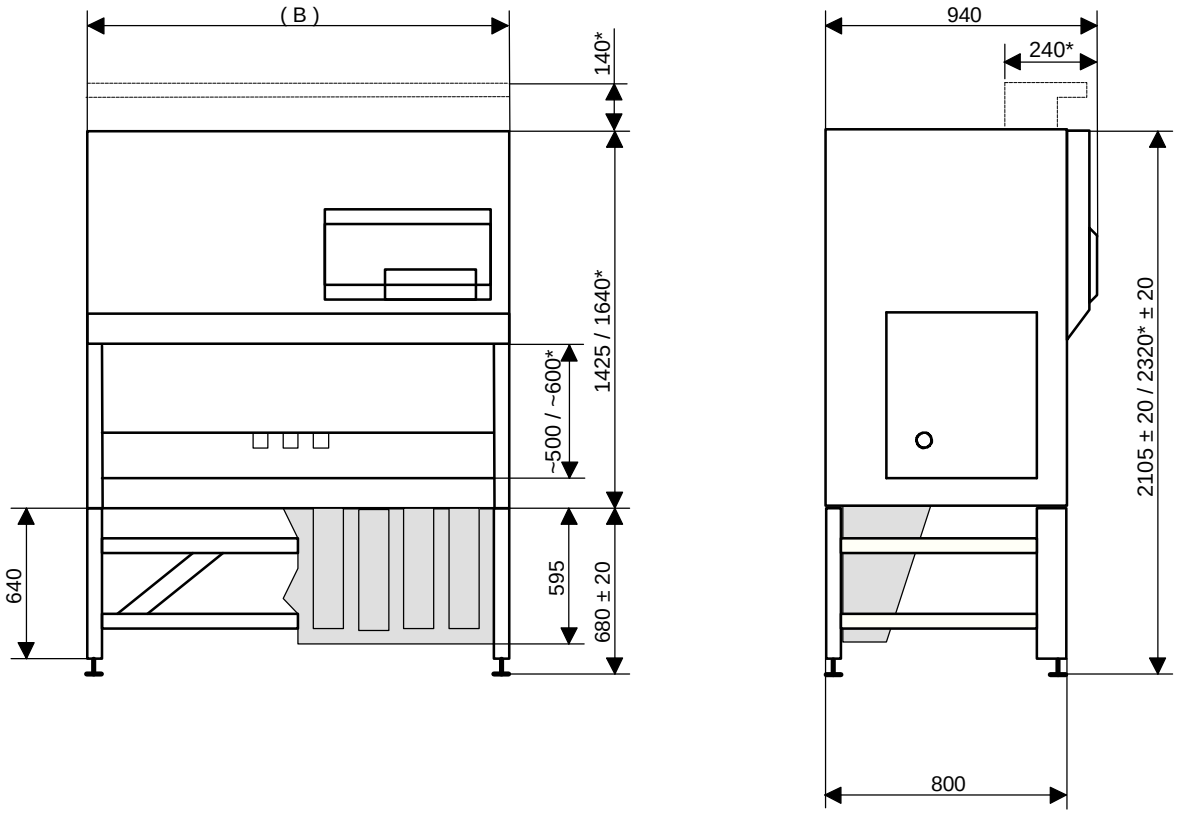

HS, HSP , HSPC Models Dimensions		9	12	15	18	
GEOMETRY						Unit
Dimensions	Width (W)	1002	1302	1602	1902	mm
Test chamber	Width	900	1200	1500	1800	mm
	Height	650 / 865*	650 / 865*	650 / 865*	650 / 865*	mm
	Depth	630	630	630	630	mm
Work opening	(W x H)	900 x ~200	1200 x ~200	1500 x ~200	1800 x ~200	mm
Front window lift height		~ 500 / 600*	~ 500 / 600*	~ 500 / 600*	~ 500 / 600*	mm
Minimum space to ceilings		~ 150	~ 150	~ 150	~ 150	mm
Catch tray capacity		22	29	36	44	liters
Base stand (level-adjustable)						
Dimensions	(W x H x D)	1002 x 680 ± 20 x 800	1302 x 680 ± 20 x 800	1602 x 680 ± 20 x 800	1902 x 680 ± 20 x 800	mm
Working height		785 ± 20	785 ± 20	785 ± 20	785 ± 20	mm

* Models HS. . . ./85 with increased interior height

8. TECHNICAL DATA

HS, HSP , HSPC Models Dimensions		9	12	15	18	
WEIGHTS, PERFORMANCE						Unit
Unit weight	HS models	~ 175	~ 200	~ 250	~ 270	kg
	HSP mod.	~ 220	~ 250	~ 300	~ 320	kg
Max. surface load for one-piece work panel		50	50	50	50	kg
Max. surface load of each panel of a segmented work panel		20	20	20	20	kg
Max. surface load, total		60	80	100	120	kg

ELECTRICAL VALUES					
Reference voltage	1/PE AC, 230	1/PE AC, 230	1/PE AC, 230	1/PE AC, 230	V
Reference frequency	50	50	50	50	Hz
Power consumption	0.75	0.75	1.3	1.3	kW
Current consumption	3.3	3.3	5.7	5.7	A
Protection class	I	I	I	I	
Grounding method	Ground wire connection	Ground wire connection	Ground wire connection	Ground wire connection	
Protection type	IP 20	IP 20	IP 20	IP 20	
Individual protection at the customer's site	**T 16 A** fuse (slow-blow) or **B 16** line circuit breaker. All applicable federal, state, and local ordinances pertaining to electrotechnology and the individual connection conditions must be taken into account.				
Fuses for the protected contact sockets in the test chamber	230 V, T 5 A				
	The individual outlets can be connected to a load of up to 5 amps and are protected by T 5 A fuses. When all outlets are employed simultaneously, the maximum total load may not exceed 5 amps				
Radio interference shielding	Mains-interference-free in accord. with EN 55 014				

TECHNICAL VENTILATION					
Exhaust /input airflow rate	~ 360	~ 475	~ 590	~ 710	m^3 /hr.
Total replenished airflow rate	~ 1200	~ 1580	~ 1970	~ 2370	m^3 /hr.
Circulating airflow rate	~ 840	~ 1100	~ 1380	~ 1660	m^3 /hr.
Heat released to the surrounding environment					
Ambient temperature = 25 °C	~ 0.45	~ 0.45	~ 0.75	~ 0.75	kJ/sec.
Test chamber temp. increase	With window closed, approx. 10 K above ambient temperature				

⚠ The ventilation values measured on a new unit are listed in the enclosed factory test report. File the factory test report in the unit log for later reference.

8. TECHNICAL DATA

FILTER TECHNOLOGY		
Circulating air filter, exhaust air filter, all models / additional filter AEF (optional accessory)		
Type		High-performance, suspended particle filter (ULPA filter)
Separation level		99.999 % at a particle size of 0.3 µm
Filter classes	[EN 1822]	H 14
	[Eurovent 4/4]	EU 14
	[DIN 24 183-1]	EU 14
	[DIN 24 184]	Class S preferred
Intake screen, GF 1HS-models		
Type		Coarse dust filter
Separation level		Coarse
Filter class	[EN 779]	G 1
Intake screen, GF 3 HS-models		
Type		Dust filter
Separation level		Coarse to medium particles
Filter class	[EN 779]	G 3
Prefilter HSP -models		
Type		High-performance, suspended particle filter (ULPA filter)
Separation level		99,999 % at a particle size of 0.3 µm
Filter classes	[EN 1822]	H 14
	[Eurovent 4/4]	EU 14
	[DIN 24 183-1]	EU 14
	[DIN 24 184]	Class S preferred
Pre-filter intake protection GF 1, HS models		
Typ		Combination filter comprising a fine particle filter coated with activated charcoal

NOISE GENERATION [in accord. with DIN 12 950]		Unit
Sound level	< 60	dB (A)

ILLUMINATION STRENGTH		Unit
Test chamber	> 800	lux

AMBIENT CONDITIONS			Unit
Operation	Temperature	+ 5 ... + 40	°C
	Humidity	90 %	r. H.
Storage	Temperature	-20 ... + 60	°C
	Humidity	70 %	r. H.

HERAsafe Safety Cabinets
in accordance with EN 12469, Class ll

1. About this Supplement

This supplement applies to the following versions of the **HERAsafe** safety cabinet:
- **HS** 9 / 12 / 15 / 18
- **HSP** 9 / 12 / 15 / 18
- **HSPC** 9 / 12 / 15 / 18
- **HS.../85** 9 / 12 / 15 / 18

It affects the following operating instructions:
50047298, 50047299, 50048480, 50048481, 50048482, 50048483, 50048484

This supplement expands the operating instructions by the classification of the units according to European Standard EN 12469.
The information in the operating instructions must be observed.

2. Classification According to EN 12469

The **HERAsafe safety cabinets** cited in Section 1 **comply with the requirements of European Standard EN 12469: 2000**.

Prior to commissioning, after every relocation, and after any changes to the unit's technological equipment, the operator must perform an installation inspection in accordance with EN 12469.

3. Work Area

The work area, **A**, consists of a rectangle with a gap, **C** (17 cm), to the work opening, **F**, and a gap, **B** (3 cm), to the rear wall **R**.

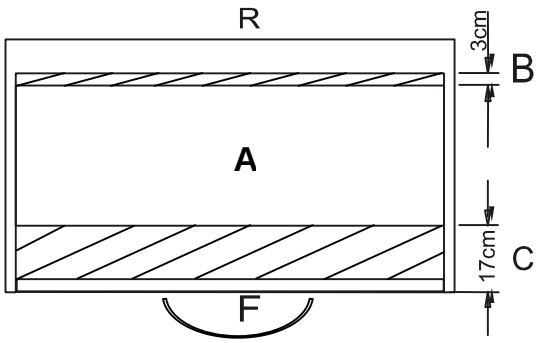

4. Acoustic Alarms

Acoustic alarms sound whenever:
- The front panel is not located precisely in its operating position.
- The airflow is not stabilized or lies outside the prespecified setpoints (air speeds, refer to the operating instructions).

NOTE – Deactivating (acknowledging) acoustic alarms:

The acoustic alarms can be deactivated if the main power switch is located in the "Close Front Window", "UV Surface Disinfection", or " " positions.

Information regarding the main power switch (Item 1 in Fig. 1/1 of the operating instructions):

Symbol	Message / Comment	Can acoustic alarm be deactivated?
Main power switch / Function selection switch with key lock:		
O	Unit OFF	-
I	Unit ON: Operation / Normal setting	No
	Unit ON: Operation with UV surface disinfection irradiator (option)	Yes
	Unit ON: Close front window (in addition to the command key)	Yes
	Unit ON: Ventilation OFF, sockets and interior lighting operational. **Pathogenic material cannot be processed safely.**	Yes