GE Healthcare

CardioSoft® Diagnostic System

Version 6.7

Service Manual

2060290-150 Revision A

NOTE: The information in this manual only applies to the CardioSoft Version 6.7. Due to continuing product innovation, specifications in this manual are subject to change without notice.

GE Medical Systems
Information Technologies, Inc.
8200 West Tower Avenue
Milwaukee, WI 53223 USA
Tel: +1 414 355 5000
1 800 437 1171 (USA only)
1 800 668 0732 (Canada only)
Fax: +1 414 355 3790

Contents

1 Introduction

2 Supported Operating Systems

3 Installation

4 Acquisition Modules for CardioSoft

5 Troubleshooting Tips

6 Care and Maintenance

7 Specifications

8 Spare Parts

1 Introduction

1.1 Manual Information

1.1.1 Revision History

Each page of the document has the document part number and revision letter at the bottom of the page. The revision letter identifies the document's update level.

The revision history of this document is summarized in the table below.

Table 1. Revision History PN 2060290-150

Revision	Date	Comment
A	2015-08-03	Initial release of CardioSoft Service Manual V6.7.

1.1.2 Manual Purpose

This manual supplies technical information for service representative and technical personnel so they can maintain the equipment to the assembly level. Use it as a guide for maintenance and electrical repairs considered field repairable. Where necessary the manual identifies additional sources of relevant information and or technical assistance.

See the operator manual for the instructions necessary to operate the equipment safely in accordance with its function and intended use.

1.1.3 Intended Audience

This manual is intended for the person who uses, maintains, or troubleshoots this equipment.

1.2 Safety Information

1.2.1 Responsibility of the Manufacturer

Information Technologies is responsible for the effects of safety, reliability, and performance only if:

- Assembly operations, extensions, readjustments, modifications, or repairs are carried out by persons authorized by *Information Technologies*.
- The electrical installation of the relevant room complies with the requirements of the appropriate regulations.
- The equipment is used in accordance with the instructions for use.
- The country of manufacture appears on the device label.

1.2.2 General

This device is not intended for home use.

Contact *Information Technologies* for information before connecting any devices to the equipment that are not recommended in this manual.

Parts and accessories used must meet the requirements of the applicable IEC 60601 series safety standards, and/or the system configuration must meet the requirements of the IEC 60601-1-1 medical electrical systems standard.

Periodically, and whenever the integrity of the device is in doubt, test all functions.

The use of accessories not complying with the equivalent safety requirements of this equipment may lead to a reduced level of safety of the resulting system.
Consideration relating to the choice shall include:

- use of the accessory in the patient vicinity and
- evidence that the safety certification of the accessory has been performed in accordance to the appropriate IEC 60601-1 and/or IEC 60601-1-1 harmonized national standard.

If the installation of the equipment, in the USA, will use 240V rather than 120V, the source must be a center-tapped, 240V, single-phase circuit.

NOTE
The CORINA acquisition module is not for use in the U.S. and Canada.

1.3 Warnings, Cautions, and Notes

The terms danger, warning, and caution are used throughout this manual to point out hazards and to designate a degree or level or seriousness. Familiarize yourself with their definitions and significance.

Hazard is defined as a source of potential injury to a person.

Term	Definition
DANGER	Indicates an imminent hazard which, if not avoided, will result in death or serious injury.
WARNING	Indicates a potential hazard or unsafe practice which, if not avoided, could result in death or serious injury.
CAUTION	Indicates a potential hazard or unsafe practice which, if not avoided, could result in minor personal injury or product/property damage.
NOTE	Provides application tips or other useful information to assure that you get the most from your equipment.

1.4 Equipment Symbols

CAUTION

CONSULT ACCOMPANYING DOCUMENTS – There may be specific warnings or precautions associated with the device that are not otherwise found on the label. Consult the accompanying documentation for more information about safely using this device.

Consult Instructions for Use
Consult the operating instructions.

Class II Equipment
Identifies equipment that meets the safety requirements specified for class II equipment by IEC 60601–1. This device was designed so that it does not require a safety connection to electrical earth (US ground). No single failure results in dangerous voltage becoming exposed and causing an electric shock. This is achieved without relying on an earthed metal casing.

Defibrillation-proof Type CF Applied Part
Identifies a defibrillation-proof type CF applied part on medical equipment that complies with IEC 60601–1. This device meets the requirements for protection against electric shock for an earth-free (floating) applied part (one intended for contact with patients) for cardiac application.

Defibrillation-proof Type BF Applied Part
Identifies a defibrillation-proof type BF applied part on medical equipment that complies with IEC 60601–1. This device meets the requirements for protection against electric shock for an earth-free (floating) applied part (one intended for contact with patients).

Mains power switch (ON - OFF)

On/Standby

Potential equalization pin

Protective Earth (ground)
Identifies the terminal of a protective earth (ground) electrode or any terminal that is intended for connection to an external conductor for protection against electric shock in case of a fault.

Caution! High Voltage!

Input
Indicates the input connector.

Output
Indicates the output connector.

Fuse

12 V DC

Date of Manufacture (Year-Month)
Indicates the original manufacture date for this device.

Manufacturer
Indicates the name and address for the manufacturer of this device. It may also include the date it was manufactured.

Catalog or Orderable Part Number
Indicates the manufacturer's catalog or part number.

Serial Number
Indicates the manufacturer's serial number.

Revision
Indicates the device's revision level.

Rx Only
US Federal law restricts this device to sale by or on the order of a physician.

This symbol indicates that the waste of electrical and electronic equipment must not be diposed as unsorted municipal waste and must be collected separately. Please contact an authorized representative of the manufacturer for information concerning the decommissioning of your equipment.

Can Be Recycled
Indicates you may recycle this material or device. Recycle or dispose of in accordance with local, state, or country laws.

Environmental Friendly Use Period (EFUP)
Per Chinese standard SJ/T11363–2006, indicates the number of years from the date of manufacture during which you can use the product before any restricted substances are likely to leak, causing a possible environmental or health hazard.

NOTE

- If the device contains less than the maximum concentration of restricted substances, the symbol contains a lowercase ***e***
- This is also referred to as China RoHS.

UL Classification Mark, Canada/US
Indicates this medical equipment is UL Classified with respect to electric shock, fire, and mechanical hazards only in accordance with UL 60601-1, CAN/CSA C22.2 NO. 601.1, and IEC 60601-2-25 for the US and Canada.

PCT (GOST-R) Mark
Indicates the device or product conforms with applicable Russian Gosstandart technical and safety standards.

1.5 Service Information

1.5.1 Service Requirements

Follow the service requirements listed below.

- Refer equipment servicing to *Information Technologies*'authorized service personnel only.
- Any unauthorized attempt to repair equipment under warranty voids that warranty.
- It is the user's responsibility to report the need for service to *Information Technologies* or to one of their authorized agents.
- Failure on the part of the responsible individual, hospital, or institution using this equipment to implement a satisfactory maintenance schedule may cause undue equipment failure and possible health hazards.
- Regular maintenance, irrespective of usage, is essential to ensure that the equipment will always be functional when required.

2 Supported Operating Systems

CardioSoft Workstation / Client:

- Windows XP Professional (32-bit), Service Pack 3
- Windows 7 Professional (32-bit)
- Windows 7 Professional (64-bit)

CardioSoft Server:

- Windows Server 2008 (64-bit)
- Windows Server 2008 R2 (64-bit)

For your notes

3 Installation

3.1 Installation of the Software

After Software installation please reboot the system!

3.1.1 Installation of CardioSoft

For CardioSoft start the Setup Program without parameter.
Versions earlier than V 4.2 first have to be upgraded to V 4.2 before installing V 6.x
To run CardioSoft properly the screen resolution must be set to 1024 by 768 pixels (minimum) with 65536 (16 bit) colors.

Note: Only CORINA Models 101 118 31...34 and 37/38 (OEM) are supported by CardioSoft 6.x.

3.1.1.1 Installation in the network

Network Configuration

To communicate with a MUSE server or Remote View Function you have to configure the TCP/IP protocol.

Network Installation of CardioSoft

CAUTION: Before installation, close all programs on all stations.
The CardioSoft server itself must not be used as a CardioSoft station.

CAUTION: To guarantee trouble-free access to the database, be sure to install the latest CardioSoft software version on all CardioSoft clients/workstations in the network.

3.1.1.1.1 Network environment: Domain

A Setup Domain User

One of the following criteria must be met:

1. A new domain user account must be created (designated as Network User) on the Windows domain where the CardioSoft server resides or a Windows domain that has a trust relationship with the Windows domain where the CardioSoft server resides.
   NOTE: Typically, the Domain Administrator must do this step
2. An *existing* domain user account from the Windows domain where the CardioSoft server resides or an existing domain user from a Windows domain that has a trust relationship with the Windows domain where the CardioSoft

server resides is designated as the Network User that will be configured to run the application on the CardioSoft system.

B Configure directory on CardioSoft-Server

Select one of the following criteria and perform the according steps:

CardioSoft-Server: Network Share

1. On the computer designated as the CardioSoft server, create a directory on a local drive volume that meets the minimum space requirements for a CardioSoft database.
2. Network Share
   a. For new installations, share this directory as “GE-cardio”.
   b. For existing installations, use the existing share. Rename the existing CardioSoft directory “cardio” to “card_old”. Create a new directory on a local drive volume that meets the minimum space requirements for a CardioSoft database
3. Configure the share permissions such that the designated Network User has “full control” permission.

NOTE
All further steps have to be performed with each CardioSoft station.

C Add CardioSoft station to Windows Domain

1. Login as local Administrator.
2. Change settings such that the CardioSoft computer joins a Windows domain where the CardioSoft server resides, or a Windows domain that has a trust relationship with the Windows domain where the CardioSoft server resides.

   Note: Typically, the Domain Administrator or another user that has been granted the right to add computers to the specified domain must do this step.

   Windows XP Professional 32-bit: Control Panel -> System -> Computer Name
   Windows 7: Control Panel -> System and Security -> System -> Section: Computer name, domain and workgroup settings -> Change Settings -> Computer Name tab -> Change...

3. Reboot

D Configure Network User on CardioSoft station

1. Login as Domain Administrator.
2. Add the designated Network User to the local Administrator group.

   Windows XP Professional 32-bit: Control Panel -> Administrative Tools -> Computer Management -> SystemTools -> Local Users and Groups -> Groups -> Administrators ->Properties

   Windows 7: Control Panel -> System and Security-> Administrative Tools -> Computer Management -> Local Users and Groups
3. Logoff and Login as the designated Network User to create the Network User Profile.

E Install CardioSoft Application Software

NOTE
Refer to the CardioSoft Installation and Upgrade Guide.

3.1.1.1.2 Network environment: Workgroup

The CardioSoft-server is configured as a Workgroup.

A Setup User Account

One of the following criteria must be met:

1. A new user account must be created on the CardioSoft server.
2. An existing user account on the CardioSoft server will be used.

This user is designated as Network User.

Using a UNC path for the database directory, the user accounts of the CardioSoft client must be present/created on the database server.

B Configure directory on CardioSoft-Server

Select one of the following criteria and perform the according steps:

New CardioSoft-Server: Create Network Share

1. On the computer designated as the CardioSoft server, create a directory on a local drive volume that meets the minimum space requirements for a CardioSoft database.
2. Share this directory as “cardio”.
3. Configure the share permissions such that the designated Network User has “full control” permission.

Existing CardioSoft-Server: Configure Network Share

All local CASEs/CardioSoft, that will be networked, are new:

1. Configure the share permissions for the CardioSoft directory such that the designated Network User has “full control” permission.
2. For UNC path: same user on both systems.

At least one local CASE/CardioSoft with existing examinations will be networked:

1. Rename the existing CardioSoft directory “cardio” to “card_old”. Create a new directory on a local drive volume that meets the minimum space requirements for a CardioSoft database.
2. Share the new directory as “cardio” and the renamed directory as “card_old”.
3. Configure the share permissions of “cardio” and “card_old” such that the designated Network User has “full control” permission.

NOTE
All further steps have to be performed with each CardioSoft station.

C Configure CardioSoft station as Workgroup

1. Login as local Administrator.
2. Change the workgroup name to the workgroup name of the CardioSoft server.
   Windows XP Professional 32-bit: Control Panel -> System -> Computer Name
   Windows 7: Control Panel -> System and Security -> System -> Section: Computer name, domain and workgroup settings -> Change Settings -> Computer Name tab -> Change...
3. Reboot

D Configure Network User on CardioSoft station

1. Login as Local Administrator.
2. Create a new local user (same name and password as the designated Network User used on the CardioSoft server) and add this Network User to the local user group.
   Windows XP Professional 32-bit: Control Panel -> Administrative Tools -> Computer Management -> SystemTools -> Local Users and Groups -> Groups -> Administrators ->Properties

   Windows 7: Control Panel -> System and Security-> Administrative Tools -> Computer Management -> Local Users and Groups
3. Logoff and Login as Network User to create the Profile.

E Install CardioSoft Application Software

NOTE
Refer to the CardioSoft Installation and Upgrade Guide.

3.1.1.2 Installation/Configuration of CardioSoft Web

Cardiosoft Web must run on the same server as the CardioSoft database file server.

Windows Server 2008 / Windows Server 2008 R2

1. Open Server Manager > Roles > Add roles -> WebServer (IIS).
   NOTE
   Enable the ISAPI extension from the Role Services dialog.
2. Install the CardioSoft software on the server
3. Configure CardioSoft (System Configuration > Country Settings…)
4. Install the dongle, parallel or USB, no particular config needed.
5. Start CardioSoft:
   -> verify the dongle is recognized by its "INTERNAL serial number" under the option codes tab.
6. Enter the CWEB option code, verify it and close CardioSoft.
7. Install CardiosoftWeb software on the server (must be exactly the same version) and reboot.
8. Make the following changes in the registry (use: regedt32.exe)
   a. Security settings
      Go to *HKLM\Software\Wow6432Node\Btrieve Technologies*

Set permissions for Group "Users" to full control.

b. Registry key values:
Go to *HKLM\Software\Wow6432Node\Btrieve Technologies*
In *\Microkernel Engine\Version 6.15\Microkernel Interface\Settings*
Verify the *Target Engine* value is "0"

- In *\Microkernel Workstation Engine\Version 6.15\Microkernel Interface\Settings*
- Verify the *Requester* value is "0"
- Verify the *Local* value is "1"
- In *\Microkernel Workstation Engine\Version 6.15\Settings*
- Verify the *TraceFile* value is C:\CARDIO\MKDEWE.TRA
- Verify the *Home Directory* value is C:\CARDIO
- Verify the *File sharing on local drives* value is "1"

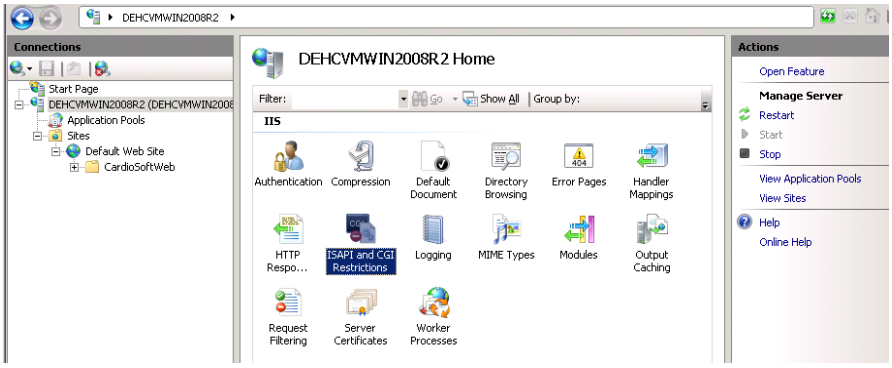

- Open IIS Manager:
  - Click *Start*.
  - In the *Start* search box, type *INETMGR* and press **ENTER**.
- Select the *ISAPI and CGI Restriction* feature and click the *Open Feature* action.

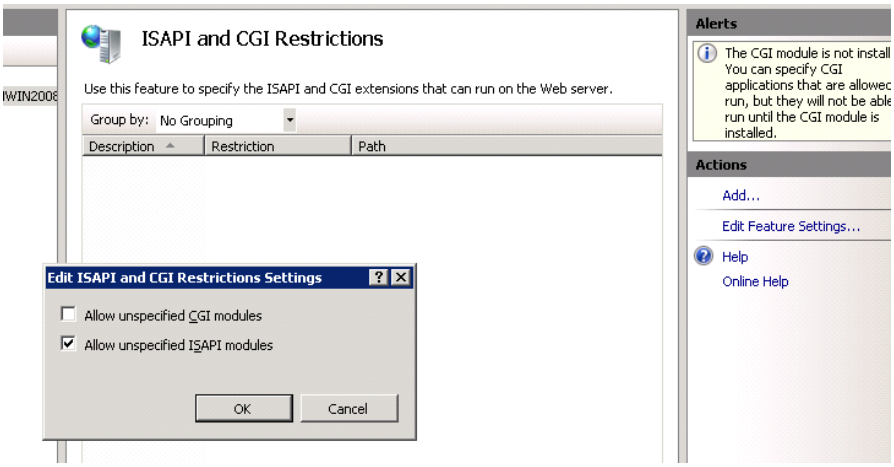

- Click the *Edit Feature Settings* action and select the *Allow unspecified ISAPI modules* check box on the *Edit ISAPI and CGI Restrictions Settings* dialog.

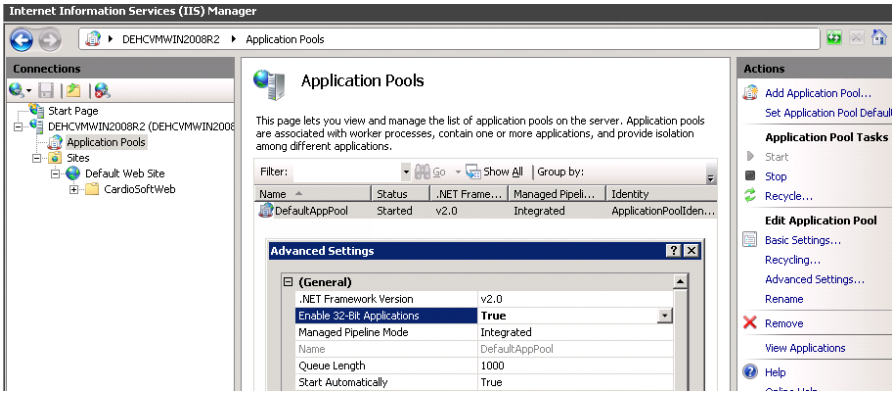

- In the *Connections* column, select *Applications Pools*. In the *Application Pools* column, select the DefaultAppPool and click the *Advanced Settings* action. Set the *Enable 32-Bit Applications* setting to *True*.

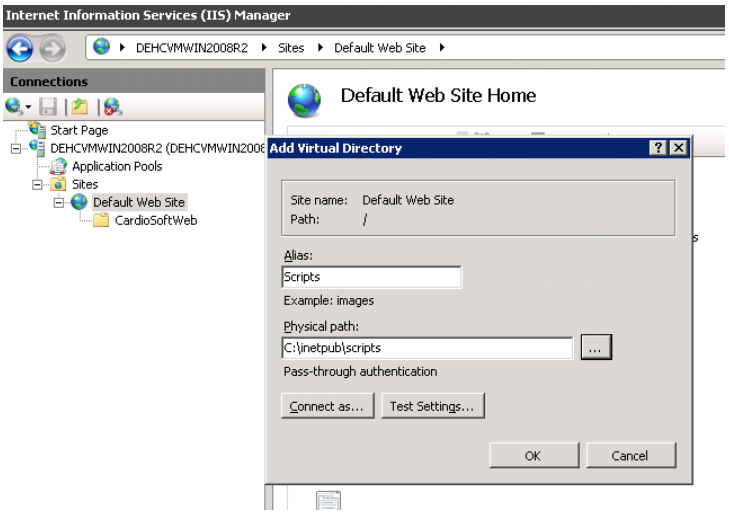

- In the *Connections* column, right-click the *Default Web Site* and select *Add Virtual Directory* from the context menu. On the *Add Virtual Directory* dialog, enter Alias *Scripts* and select the path to the IIS scripts directory: *C:\inetpub\scripts*.

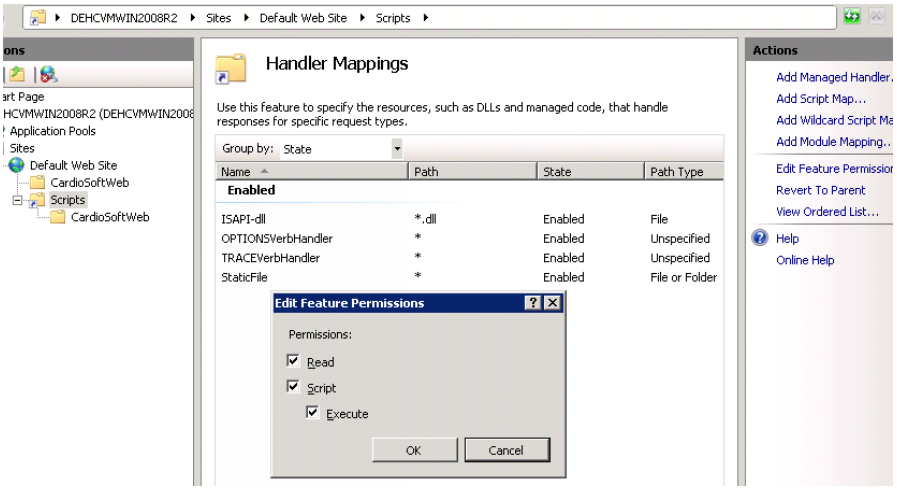

- In the *Connections* column select *Scripts*, in the center column *Handler Mappings*, and in *Action* column first click *Open Feature*, then *Edit Feature Permissions*. On the *Edit Feature Permissions* dialog, enable *Read*, *Script* and *Execute*.

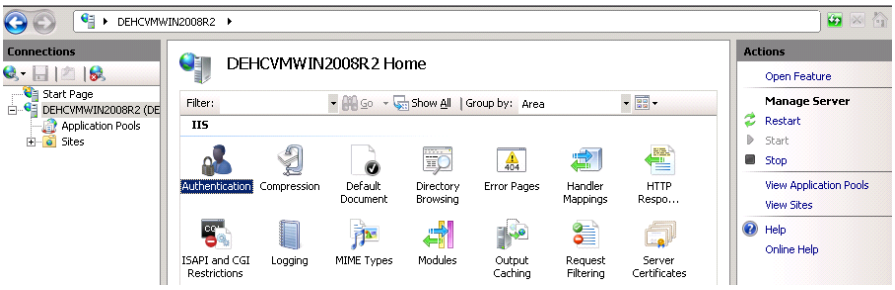

- In the *Connections* column, select the server name, in the center column *Authentication*, and in *Actions* column first click *Open Feature*.

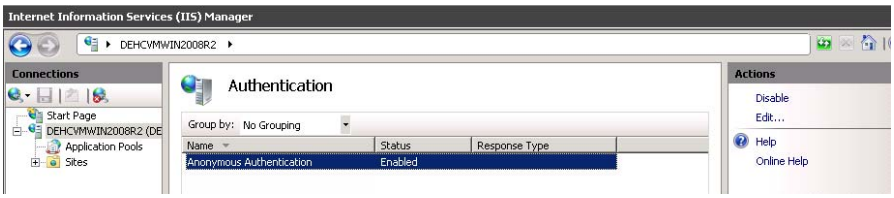

- Enable *Anonymous Authentication*. This can be changed later under the responsibility of the hospital's IT department.

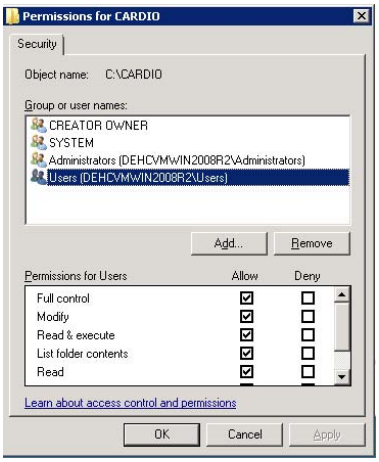

- Navigate to the CardioSoft / CS Database directory and grant the User group *Full control*.

9. Restart IIS
10. Check CardioSoftWeb version: http://SERVER_IP/scripts/CardioSoftWeb/iscard.dll?
11. Check access

    Homepage URL:

    http://SERVER IP/cardiosoftweb/cardiosoftwebhome.htm

    Direct URL to patient ID " 123456 ":

    http://SERVER_IP/scripts/CardioSoftWeb/iscard.dll?GetExamdirect?Patid=123456

3.1.2 Installation of Communication Server

The Communication Server is a separate PC with up to 4 Modems connected. Resting ECG procedures can be sent from ECG carts supporting A5 or CSI protocol to this Communication Server over a Modem. The Communication Server stores the Resting ECG's in a local network server and this data can be sent to the MUSE. Procedures can be sent from ECG Systems to this Communication Server over Modem.

Note: This PC can only used as Communication Server and cannot used for other purpose.

Prerequisites: PC with minimum requirement see CardioSoft User Manual, Up to 4 serial ports. Up to 4 Modems (**CAUTION: all Modems must be from the same type**), PC must be integrated in a local network to store the data or send the data to MUSE.

Installation Steps:

1. Install CardioSoft on the PC
2. Start the CardioSoft Application and view the System Configuration. In the Tab Modem select the Baud Rate and the Modem Type (The Port Setting is not used for the Communication Server). In the Tab MUSE you can configure to send the Resting ECGs to MUSE (The setting “Start Modem connection before transfer” cannot be used). In the Tab General please deactivate the “Enable Password Function”.

3. For every Modem create a Shortcut to the CardioSoft Application. In the Properties Dialog of the Shortcut view Tab Shortcut. For Modem 1 at COM1 change the content of the field “Target” to “...\cardio.exe cartmodem com1” (for Resting ECG from ECG recorder) or “...\cardio.exe sysmodem com1” (for Resting ECG from ECG System) and rename the shortcut to “CardioSoft Modem 1”. Change the other Shortcuts in the same way.
4. Connect all Modems and switch on all Modems. Start the first Shortcut. It should be displayed a window with the title “COM1: Data received form ECG System/ECG recorder”. If an error message is displayed check the Modem Settings. Press the “End” Button in the window and close the CardioSoft Application. Test every shortcut in the same way.
5. Copy all Shortcuts to the Menu Group “Start up” with the Windows Explorer.
6. Close all applications and reboot the system.

With every start, up to 4 CardioSoft Applications are started and store the received Resting ECGs. If errors messages are displayed, then check the error like described in Step 4

NOTE
Up to V5.02 the communication server assigned all received examinations, regardless of different patient demographic data. From V5.1 the default behavior is different: examinations that have the same patient ID as stored on the local network server but different demographic data (last name, first name, date of birth), are copied to a list, to allow the customer later a manual assignment of this examinations. The comparison of patient demographic data is done case insensitive, possible empty fields don’t care. The number of not assigned examinations is displayed. If the „End“-Button of any of the 4 windows is pressed, a dialog to assign manually all received examinations (that have not yet been assigned) comes up automatically.

If it is desired to assign all examinations automatically (as in versions <5.1), even if patient data are different, the entry „PAT_CommSrvTempList=0“ in LOC_WIN.INI section [CARDIO] must be inserted. Please note that patient demographic data in the examination is always updated with the patient data of the database (Resting ECGs).

3.1.3 General Entries in INI Files

All INI Files are located in the Application Data Folder that can be selected during installation. The default setting is C:\Cardio. Procedure Setups will be stored in CARDIO.INI. General settings will be stored in CA_SYS.INI and could be exported to any folder or floppy disc. Special service settings are stored in LOC_WIN.INI. When CardioSoft is started the first time and there is no CA_SYS.INI or no entry in this INI file the default values from the LOC_WIN.INI will be used and copied to the CA_SYS.INI file. After that the values from the CA_SYS.INI file are used.

3.1.4 Entries in LOC_WIN.INI

Entries from the file LOC_WIN.INI described here are mainly those which cannot be changed directly by changing settings in CardioSoft.

Describtion of the CARDIO section in the LOC_WIN.INI File

Font entries, screen settings, HF output ...

```
[CARDIO]

GRA_ScreenFont1 = "..."        // Default = "MS Sans Serif"
GRA_ScreenFont2 = "..."        // Default = "Arial"
GRA_ScreenFont3 = "..."        // Default = "Courier New"
GRA_ScreenFont4 = "..."        // Default = "Small Fonts"
GRA_ScreenFont5 = "..."        // Default = "MS Sans Serif"

GRA_PrinterFont1 = "..."       // Default = "Times New Roman"
GRA_PrinterFont2 = "..."       // Default = "Arial"
GRA_PrinterFont3 = "..."       // Default = "Courier New"
GRA_PrinterFont4 = "..."       // Default = "Small Fonts"
GRA_PrinterFont5 = "..."       // Default = "Times New Roman"

CFG_ProdName =   GE CardioSoft // Product name for CardioSoft
                 GE MicroLab // Product name for MicroLab
                 GE CASE Client // Product name for CASE Client
CFG_CorinaTime = 5
CFG_Abcux = 2977               // 2978 or entry not available: USA version
                               // 2977: international version

CardioInstallPath = C:\Program Files\GE Healthcare
                               // Program files folder where Cardio.exe is installed

CFG_ProgDir = C:\CARDIO        // Application Data Folder
CFG_DataDir = C:\CARDIO        // Database folder

CFG_SavedDataDir               // Path to server database
CFG_DispSwitchDBMsg            // 0: disable message when database mode is
                               // changed
                               // Default: 1
CFG_OfflineBackup              // 1: save tests after sync. with online database in
                               // directory LOCAL_BACKUP
                               // Default: 0

CFG_WorkOffline                // Setting from user interface
CFG_AutoWorkOffline            // Setting from user interface

CFG_RemoveSpo2Device           // 0: make legacy SpO2 devices visible in
                               // configuration
                               // Default: 2

CFG_SerialNumber =
CFG_UNCNameFor DataDrive=// UNC Name for Data Drive
```

CAUTION: If the file loc_win.ini is inadvertently deleted, only the USA version of CardioSoft can be started. It is thus advisable to make a backup of the INI files from time to time.

```
INST_DevType=0                 // Device Type is set from the Installation Program
                               // 0: CardioSoft (is default if value not present)
                               // 1: CardioSoft
                               // 2: MicroLab
                               // 3: CASE
                               // 4: CASE Client
                               // 5: CS
```

RES_ShowQTDispTable=? // Range of values: 0..1 Default: 1
// Meaning: Output of the QT data for all leads in the measurement table

GRA_PrinterFontFactor=? // Range of values: 50..500 Default: 100
// Meaning: Font size factor for print fonts

GRA_ScreenFactor=? // Range of values: 50..500 Default: 100
// Meaning: Multiplication factor for screen display fonts

GRA_GridWeight=? // Range of values: 1..9 Default: 5
// Meaning: Grid points in printouts

GRA_CharSet=? // Range of values: 0..17 Default: 0
// Meaning: Determines the character set for the CardioSoft fonts.

0: ANSI_CHARSET
1: DEFAULT_CHARSET
2: SYMBOL_CHARSET
3: SHIFTJIS_CHARSET (Recommendation for Japanese)
4: OEM_CHARSET
5: BALTIC_CHARSET
6: CHINESEBIG5_CHARSET
7: EASTEUROPE_CHARSET
8: GB2312_CHARSET
9: GREEK_CHARSET
10: HANGUL_CHARSET
11: MAC_CHARSET
12: RUSSIAN_CHARSET
13: SYMBOL_CHARSET
14: TURKISH_CHARSET
15: JOHAB_CHARSET
16: HEBREW_CHARSET
17: THAI_CHARSET

GRA_PropSheetX = 100 // Default: 100
// Meaning: Scaling factor for the width of “Property Sheets” like the Setup-Dialog

GRA_PropSheetY = 100 // Default: 100
// Meaning: Scaling factor for the height of “Property Sheets” like the Setup-Dialog

GRA_ScreenFont Factor=? // Range of values: 50..500 Default:100
// Meaning: Multiplication factor for screen display fonts

GRA_Dlg SizeX = 100 // Default: 100
// Meaning: Scaling factor for the width of dialogs

GRA_Dlg SizeY = 100 // Default: 100
// Meaning: Scaling factor for the height of dialogs

PRI_CancelExe = ? // Range of values 0..1 Default = 1 for P2000 Printer others = 0

Some printer drivers have problems with aborting the print job. A separate program CancelPr.Exe can be used to improve this behavior.

MUS_SendComment=0 // Controls the comment + history objects to be sent
// to MUSE within the supplements object
// Range 0..1, default=1
// 0: no objects
// 1: comment + history

GRA_DontRemoveGrid = 0 // Range of values 0..1 Default = 1

When CardioSoft is closed before all print layouts are finished, there may be problems with the grid. Setting this value to 1 causes the grid-font not to be removed when CardioSoft is closed.

CAMUSB_ImpedanceSlape = 115 // Meaning: for Impedance Measurement

CAMUSB_ImpedanceInterccpt = 2152 // Meaning: for Impedance Measurement

CAMUSB_LeadFailBias = 1 // Range of values 0..1 Default: 1
// Meaning: Enable lead Fail Detection

Some printer drivers have problems managing the printout area, so that the last line may be missing, for example. Where printing should start can be set as follows:
PRI_FrameLeft=? // left-hand margin in 1/10 mm
PRI_FrameTop=? // top margin in 1/10 mm

Mai_MoveMainWindow=? // Range of values 0..1 Default: 0
// Meaning: 1. The main window can be moved by clicking on the title bar in the initial screen
// Meaning 0: The main window can not be moved

Mai_ResizeMainWindow=? //Range of values 0...1 Default: 0
Specifies if the main window can be resized to minimum 800x600 pixels

Mai_MainWindowPosition=left,top,width,height
// Position and size of the CardioSoft main window (in pixels)
Example:
Mai_MainWindowPosition:1024,0,1024,768 moves the main window to the 2nd screen of a dual screen system
Note: Be sure to enter valid values. Otherwise you may not see the CardioSoft screen.

MUS_LosslessCompression=? // Range of values 0...1 Default: 1
Specifies that the 10 second ECG is sent to MUSE with our without compression

FDA_InfoText=? // Range of values 0...1 Default = 1 for CardioSoft in English and Spanish
Specifies if the following text is shown on the Initial Screen or not:
CAUTION: U.S. Federal law restricts this device to sale by or on the order of a physician

RES_GlobalValuesReadOnly=?//Range of values 0...1 Default: 0
Specifies if Measurement Results in Resting ECG / Post Text Review / Test Summary can be modified or not.

DSP_ClipCurves=? //Range of values 0...1 Default: 1
Specifies if the ECG waveforms are printed within the designated frame.

EMR_ErrDir=<error folder>
The folder for error logging for the EMR Interface can be set individually for each client (System Configuration, EMR tab). If no value is specified, the default value is used:
<App Data folder>/emr_errors, i.e. D:\CASE\emr_errors or C:\CARDIO\emr_errors

EMR_Mode=1
If this entry does not yet exist, EMR mode is automatically enabled (=1) when starting CardioSoft, if the file emr.ini in c:\winnt\ with entry “LogicianInstallPathTo” in section “[Installation]” is available (which is automatically done with the Installation of the EMR system). Note that additionally the option XEMR is needed to run the EMR interface.

CFG_EnableEMR=0
The EMR mode can be switched off temporarily on the service screen. This is to have access to all functions for service purposes without the need to change EMR_MODE in LOC_WIN.INI manually. (So the entry EMR_Mode is not changed in this case).

PAT_CheckDemogr=? // Range of values 0...2 Default:1
//Meaning: If CardioSoft is launched by an external information system via HL7, BDT, or GDT, this entry defines the reaction, if the incoming patient ID is identical with the local database, but the patient demographic data (one of first name, last name or date of birth) are different.

0: No user interaction; If the incoming data field is not blank, the data is taken from the information system, else from the local database.

1: A side-by-side dialog comes up to select the patient demographic data to be used for the local database.

2: An error message comes up which must be confirmed. A new test cannot be performed.

PAT_RequirePatID=0 // Range of values: 0…1: Default: 1
Meaning: When CardioSoft is launched by an EMR (HL7, BDT, GDT), an existing Patient ID is mandatory and an error message comes up if no Patient ID was provided by the EMR.
If set to zero, no error message occurs if no Patient ID is provided by the EMR. The patient record as well as the test is stored without Patient ID.

CFG_TEMP_PATH_PDF=d:\temp// Default: ""
Meaning: Folder used when creating a synchronous temporary PDF output (for DICOM encapsulated PDF).
The default value uses the "TMP"- or "TEMP"-path variable as folder.

CFG_EXT_LOCATION_SOURCE=0// Range of values: 0…2; Default: 1
CardioSoft Source for Ergospirometry location used by LF8 (field "Ward"):
0: Not used
1: Room field
2: Location name configured in MUSE tab

CFG_ConfirmByLoginUser=1 // Range of values: 0...1; Default: 0
If the CASE/CardioSoft user list is enabled, a test can be confirmed by the authenticated user (login user) without entering again username and password during test confirmation process.

3.1.5 Entries in CARDIO.INI

CARDIO.INI stores the user dependent settings. In this chapter only those settings are described which cannot be changed directly by the CardioSoft application.

[REST_ECG]
PostTestPage=0

Controls the default tab appearing in Post Test Review of the resting ECG examination: default: 0
0 = Test Summary 1 = ECG Traces 2 = Medians 3 = Arrhythmia Review
4 = Vector Loops 5 = Full Disclosure

Color customization for Ambulatory Blood Pressure printouts
[LBD_RECORD]

Remark: Header and footer are configured in the Printer Setup.

Format of the following items: R value (Red), G value (Green), B value (Blue)
Range: 0…255

Color of BP lines "Day" phase (affects Standard Page report format #1):
LBD_PriColLineDay=100,200,300 (Default: 0,255,0)

Color of BP lines "Night" phase (affects Standard Page report format #1):
LBD_PriColLineNight=100,200,300 (Default: 0, 0,128)

Color of Pulse Pressure lines "Day" phase (affects Standard Page report format #2):
LBD_PriColLinePPDay=100,200,300 (Default:0,0,0)

Color of Pulse Pressure lines "Night" phase (affects Standard Page report format #2):
LBD_PriColLinePPNight=100,200,300 (Default:0,0,0)

Color of area "Day" phase (affects Standard Page report format #2, Tabular Summary report, Histogram in Phases report)
LBD_PriColFlatDay=100,200,300 (Default: 255,245, 0)

Color of area "Night" phase (affects Standard Page report format #2, Tabular Summary report, Histogram in Phases report):
LBD_PriColFlatNight=100,200,300 (Default: 166,202,240)

Color of Histogram (affects Statistic Summary report)
LBD_PriColFlatSum=100,200,300 (Default: 255,128, 0)

Color of upper limit area (affects Standard Page report format #3):
LBD_PriColFlatUpperLim=100,200,300 (Default: 255, 0, 0)

Color of lower limit area (affects Standard Page report format #3):
LBD_PriColFlatLowerLim=100,200,300 (Default: 0, 255, 0)

3.1.6 Entries in SETUP_CM.INI

This file is located in the Application Data Folder.

Option to set the sorting sequence of the alphanumerical key as required. Example: sort patients in reverse order; max. 255 characters permitted

[DATABASE]
SortTable = “ZzYyXxWwVvUuTtSsRrQqPpOoNnMmLlKkJjIiHhGgFfEeDdCcBbAa”

This entry only comes into effect when made before calling up CardioSoft for the first time. The sorting sequence is stored in the database during its creation. If a change in the sorting sequence is to be made at some later time, the entire database has to be deleted.

TimeOut : <value>

The function of this entry is to define the timeout (in seconds) for operations like open, write, update, delete. This may be very helpful for environments with low network performance.
The default value is 30 seconds. The valid range is between 1 and 100.

[GENERAL]
CFG_TEST_ATTACHMENTS=1 (Default: 0)

This item is automatically set to 1, when at least one workstation provides test attachments (e.g. Ergospirometry with LF8 reports). This is needed to control test attachment specific configuration items (e.g. for the Export dialog).

PAT_SET_UNDEFPIDS_TO_UNASS=0 // Range of values: 0...1; Default: 1
If a Resting ECG is received from an ECG recorder without patient ID (not even blanks), that test is automatically moved to the list of unassigned tests (default), independent of patient data content.

PAT_SET_UNDEFPIDS_TO_RANDOMPATID=1 // Range of values: 0...1; Default: 0
If a Resting ECG is received from an ECG recorder without patient ID (not even blanks), the system creates a random patient ID that is not yet existing in the database (format: "000000-xxxxx", whereas x is a digit 0...9) instead of the special ID "000000", which is the default.
In combination with item

"PAT_SET_UNDEFPIDS_TO_UNASS=0" all received ECGs without a patient ID would automatically be included in the database with the newly created patient ID.

3.1.7 Entries in CardioSoft.INI

[Installation]

CardioSoft.ini is created by the EMR system and used by both, EMR and CardioSoft. It is stored in the folder <EMR install path>/CardioSoft. The following entries are used:

CARDIOPATH=<filepath>
Specifies the full pathname of the CardioSoft executable (is filled and used by EMR):

READDIR=<dir path>
CardioSoft output directory for car-files (Folder is automatically set by the EMR system and used by EMR and CardioSoft; It can be changed in CardioSoft, System Configuration, EMR tab, "Write to" folder):

WRITEDIR=<dir path>
CardioSoft input directory for emr-files (Folder is automatically set by the EMR system and used by EMR and CardioSoft; It can be changed in CardioSoft, System Configuration, EMR tab, "Read from" folder):

TESTMODE=<value>
If value is TRUE then the CPO EMR will run in test mode. Test mode causes the HL7 files to be written with MSH-11 set to D (Debug) rather than the normal P (Production). Patient demographic data of simulated patient is used for all tests. Test mode should only be enabled for testing and should not be used in a production environment.

FILEHANDLING=<value>
Specifies what should be done with files read or written (only used by EMR).
The value must be one of the following: 1. DELETE (default: car-files are deleted, emr-files are always deleted by CardioSoft). 2. MOVE (car-files and emr-files are saved to <readdir>/save and <writedir>/save)

3.1.8 Entries in HL7.INI

[GENERAL]

HL7.INI is used by Cardiosoft to setup the interface to the EMR system. The file is stored on the Cardiosoft server, so the items are valid for all clients. The following items are set by using the EMR tab in CardioSoft (System Configuration) by the user:

GEN_OutboundDir=c:\temp\inbound
This is for the upload of existing patient and test records to the EMR database

GEN_TCPIP=0
Enable/Disable TCP/IP for the upload of existing patient and test records to the EMR database

GEN_HostName=DTSServer
Hostname of DTS server (or IP address)

GEN_PortNrOut=34000
TCP/IP OUT port

GEN_Header=\011
Header for HL7 Low Level protocol

GEN_Trailer=\028\013
Trailer for HL7 Low Level protocol

The following settings can be entered manually in section [GENERAL] in HL7.INI (they are used with their default values)

GEN_ReqAckFromResponder=1
HL7 is used in Acknowledge mode (only with TCP/IP; default value is 0):

GEN_AckTimeout=1000
Timeout after an expected Acknowledge Message (only in Acknowledge mode) from the Responder in ms (default value is 2000ms, value is valid from 500 to 5000ms)

GEN_MaxSentMess=1
Total number of messages sent (default value is 2: original message and 1 repetition after error; value is valid from 1 to 5)

GEN_EndOfSegmWithCRLF=0
HL7 segments end with CR/LF (default is 1, that means all segments end with CR and LF; 0 means only CR)

3.1.9 Directory structure and notes on CardioSoft files

Upon installation, CardioSoft creates the Program Files folder (default: C:\Program Files\GE Healthcare) where all files required for execution of the program are copied.

The following sub-folders are created:

ConnSrv	Connectivity server program files
DIAGS	Thermal Writer diagnostic software
DOC	Operator Manuals
PatientEducation	Patient Education files

After the CardioSoft application has been started once, the following directories have been created. **Database** Directories (CardioSoft Default: C:\CARDIO):

AVER	Late Potential Examinations
CAS	CASE8000 Examinations
DATABASE	Btrieve File (e.g. database engine)
EMECG	Emergency Examinations
EMRLINK	HL7 files (links for EMR)
ERGOECG	Stress tests
EXTPROG	Reports from external programs
HOLTERRBP	Ambulatory blood pressure files
NARRATIV	Configured reports

ONL500	Full disclosure files for research (500Hz)
ONL2000	Full disclosure files for research (2000Hz)
ONLINE	Full disclosure files for procedure types
RESTECG	Resting ECG files
RHK	Not in use
SETUP	User settings
SOUND	Test attachments
SPIR	Spirometry Examinations
TAPE	Not in use

After the CardioSoft application has been started once, the following directories have been created as subfolders of the Application Data Folder (CardioSoft default: C:\CARDIO):

ATTACH	Temp directory for test attachments (e.g. ergospirometry)
DICOMLOG	DICOM log and cache files
emr_errors	EMR log files
LOCAL_DB	Database directory for offline mode
LOG	CASE / CardioSoft event log files
RESTORE	Restore folder due no network problems

The data base files containing the patient data and the references (file names) from the examinations are located in the directory \DATABASE. BTRIEVE is used as a data base. The examination data from operating modes Resting ECG, Spirometry, Ergometry and Ambulatory Blood Pressure are stored in the directories \RESTECG, \SPIR, \ERGOECG and \HOLTER BP, respectively. In all examinations online ECGs are stored in \ONLINE. Configurations are stored in the \SETUP directory.

Windows:

CASEsplashscreen.bmp
CaseStartup.bmp
CaseStartup_1152x864.bpm
CaseStartup_1280x1024.bpm

Windows\<Fonts Folder>:

GEInspBd.TTF
GEInspBI.TTF

Windows\inf:

Camusb.inf
Camusb.cat
Camusb_x64.inf
Camusb_x64.cat
Camusb_fx1.inf
Camusb_fx1.cat

Camusb_fx1_x64.inf
Camusb_fx1_x64.cat
MmsAcq_pci.inf
MmsUsbWriter.inf

Windows\System:

cor_vxd.vxd
hel_grid.ttf

Windows\System32:

CASE8000.cpl
Hel_grid.ttf
Mfc42.dll
MSFLXGRD.OCX
msvcp60.dll
Msvcrt.dll

Windows\System32\ drivers:

Camusb.sys
Camusb_x64.sys
Camusb_fx1.sys
Camusb_fx1_64.sys
Camusbsw_fx1.bix
COR_SYS.sys

Windows\System32\drivers\Case:

AcqKeypad.sys
btn_blk.sys
CardioMsg.dll
mmsacq_isa.sys
mmsacq_pci.sys
mmscom_isa.sys
mmscom_pci.sys
mmsusb.sys
mtpd.sys
pgsusbsw.bix
PgsUsbWriter.sys
PgsUsbWriterLoader.sys
thermal_printer_fpga.bin
UsbWriter.sys

Windows\System32\drivers\Case\AcqFiles:

801284a.bin
acq_boot.bin
acq_brd.abf
acq_prog.abf
am114.m
bootldr.abf
ee_mgr.abf
eeboot.abf
main.abf
modldr.abf

Windows\System32\drivers\Case\inf:

Bimini_NT.inf
Case.inf
MmsAcq_isa.inf
MmsAcq_pci.inf
MmsAcqKeypad.inf
MmsBtn_isa.inf
MmsCom_isa.inf
MmsCom_pci.inf
MmsUsb.inf
MmsUsbWriter.inf
Mtpd.inf
P2000_NT.inf
P2000_XP.inf
PgsUsbWriter.inf

PgsUsbWriterLoader.inf
Radisys_NT.inf
Radisys_XP.inf

Windows\System32\drivers\Case\WriterFiles:
Chinese_GB2312.itf
Cyprwrtr.dld
EastEurope.itf
Japanese.itf
Korean.itf
Latin1.itf
Russian.itf
Turkish.itf
Usbwrtr.dld

File name nomenclature of the examination procedure

The file name comprises the ID letter for the examination procedure (C: Ergometry, R: Resting ECG, S: spirometry, N: STAT (emergency) ECG, A: late potential analysis, B: ambulatory blood pressure measurement, H: Holter ECG, U: ultrasound, T: stress echocardiography, Y: X-ray, K: cardiac catheterization, X: external programs, Z: Right-Heart-Catheterization), the identification letter for the compression (C: compressed, U: uncompressed), the internal patient ID (6-digit with leading zeros) and the internal examination ID (3-digit with leading zeros), giving additional file data.

File in windows inf directory: camusb.inf

INI files

An initialization file CARDIO.INI is created in the Application Data Folder to store modality-specific settings. Up to 30 different setups can be stored (see *Custom Setup* in *System Configuration*), making them available to all users of a network. The file names are SETUP0.INI to SETUP29.INI. Stress test driver settings are stored in file PA5V0.DAT to PA5V29.DAT.
Entries in the initialization file LOC_WIN.INI are described in the corresponding sections of this Service Manual.

An initialization file CA_SYS.INI is created in the Application Data Folder, where the system settings are stored.

Stress test driver (ergometer, treadmill) settings are stored in the file ERG_PROT_V5AN.DAT in the Application Data Folder. It has been known for this file to have been deleted during new installations. It can also prove useful to assign the file with the attribute READONLY. This prevents overwriting or deletion. However, this attribute must be removed again before making any new changes in the profile. It is more advisable, however, to make a backup of the file as it cannot then be lost, even in the event of a hard disk error.

The initialization file HL7.INI is used for the EMR Interface created in the database directory. It is valid for all clients. For entries, see the corresponding section of this manual.

This initialization file CardioSoft.INI is created by the EMR system and is also used by CardioSoft.

3.1.10 System Configuration/Service Screen

The service screen is accessed in the General Settings via the “For Service” key. The password is **helserv or case8k**. This contains the logbook listing the errors arising during the run period since the last program start. One can delete the logbook or save it for future reference under a different file name.

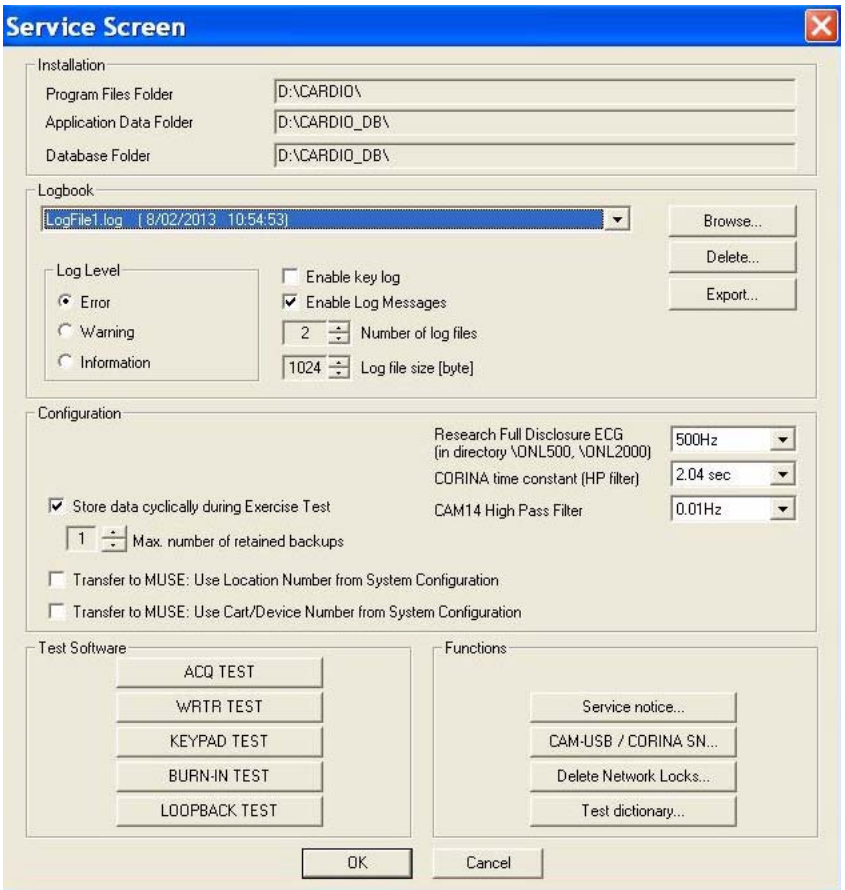

Figure 2-1: Service Screen

Service Screen Description

Element	Description
Installation	Displays current installation folders
Logbook	Displays internal logbook entries with time stamp

Element	Description
Log Level	Level on which the logging mechanism filters incoming messages ■ Error: Only messages classified as ERROR are written to the log file ■ Warning: Error and warning messages are written to the log file ■ Information: All kind of messages are written to the log file
Enable key log	If enabled, key events are written to the log file
Enable Log Messages	If enabled, log messages are written to the log file
Number of log files	Defines the number of log files kept for previous events (log history) ■ Possible Values: 1 – 15 log files
Log files size [byte]	Defines the maximum size of a single log file in byte ■ Possible Values: 10 – 1024 Byte
Browse	Opens the currently selected log file (currently selected in the log file drop down list) within the Microsoft Notepad.
Delete	Deletes the currently selected log file (currently selected in the log file drop down list)
Export	Provides means to export one or more log files to a local directory or SD card
Configuration	
Store data cyclically during Exercise Test	This setting enables continuous storage of test data during an Exercise Test, thus limiting the loss of data if any issue occurs with the system (system/application unresponsive) and the ECG data cannot be saved in the test end phase. When the system is restarted after a crash or unresponsiveness, the temporarily saved Exercise Test will automatically be entered into the database.
Max. number of retained backups	The maximum number of retained backups can be defined in the range from 1 to 5.
Transfer to MUSE: Use Location Number from System Configuration	When tests are transferred to MUSE, the location number of the current system configuration is used rather than the number that was stored at the time the test was acquired.
Transfer to MUSE: Use Cart/ Device Number from System Configuration	When tests are transferred to MUSE, the cart/device number of the current system configuration is used rather than the number that was stored at the time the test was acquired.
Research Full Disclosure ECG (in directory \ONL500, \ONL2000)	Please always select “non”. If you select other than “none” the hard disk will be filled up very fast, because for every Full Disclosure ECG a Full Disclosure ECG with 500 Samples per second or 2000 Samples per second will be stored.
CORINA time constant (HP filter)	Time Constant for CORINA ECG Acquisition Module. Should be not changed, if not requested from Customer.
CAM-14 High Pass Filter	High Pass Filter for CAM-14 ECG Acquisition Module. Should be not changed, if not requested from Customer.

Element	Description
Test Software	
ACQ TEST	Test of the CASE ECG Acquisition Module.
WRTR TEST	Test of the Thermal Writer.
KEYPAD TEST	Test of the CASE function keyboard.
BURN-IN TEST	Burn-In Test for CASE.
LOOPBACK TEST	Loop back test for CASE Serial ports.
Service notice…	Service Person can write notice to a file.
Set CAM-USB/CORINA Serial Number…	Set the CAM-USB or the CORINA Serial number of a CAM-USB or CORINA from Service with Serial Number 0.
Delete Network Locks…	All other stations of the network using this server must be stopped before this Network Locks should be deleted.
Test dictionary…	Compares the Text Strings of the selected language with the actual selected language of the system configuration.
OK or Cancel	Close the Service Screen

3.1.11 Data transfer to/from MUSE

Store Examinations for MUSE

Prerequisites: Network with correct installed TCP/IP specifications, or Modem and RAS with installed TCP/IP, assuming FTP or a shared directory will be used.

Each CardioSoft has to use its unique Cart number as well as the correct location number for generating an unique filename!

Tests on CardioSoft can be transferred to MUSE database for general accessibility
Three possibilities are implemented in CardioSoft:

a) Save Examinations on Floppy and carry it to MUSE
b) Send Examinations to MUSE using FTP via LAN or RAS
c) Store Examinations on a shared directory located on MUSE via LAN or RAS

The usual way for **MUSE 5.x** is FTP:

1. Specify the FTP account informations on CardioSoft -> System Configuration -> MUSE by enabling “Data transfer via FTP”
2. Type in the FTP Server (normally the same as the Web Server)
   Use Username and Password if this information is required for the FTP Server.

For **MUSE 4.x** the preferred method will be the shared directory:

1. Specify the account informations on CardioSoft ->
   System Configuration -> MUSE by enabling “Data transfer via shared directory”.
2. Type in the correct shared directory.
   Use Username and Password if these informations is required for accessing this shared directory.

Example: Use an existing mapped network drive (f.e. “F:\” as a synonym for \\SvrName\SharePointName) already established from file manage reconnected at logon time (not available if using a modem!), or use the UNC Format in a valid form like “\\SvrName\SharePointName”.
If no DNS/WINS is installed on the domain server (f.e. you're using RAS) write “\\123.456.789.255\SharePointName” (all samples without quotes!), where 123.456.789.255 is the physical IP address of the Server.

Transferring examinations to MUSE using FTP or shared directory, the connection to the server can be established via local modem.
Enable “Start modem connection before transferring data” to use these RAS functionality.
Note: You have to configure the modem, RAS, phonebook, etc. in a separate step.

Modem/RAS Installation

Prerequisites: RAS access on MUSE-Server for required account.

Transferring Data from/to MUSE can be done via LAN or modem.

1. Select taskbar ->Start ->Settings ->Control Panel.
2. Doubleclick on “Modem” and follow the questions on the displayed dialogs. Take attention in “Properties” ->“Call preferences” and disable “Wait for dial tone before dialing” if modem is linked in an Inhouse telephone compount.
3. Select taskbar ->Start ->Settings ->Control Panel.
4. Double-click on “Network”
5. Select Tab “Services”, add “Remote Access Service” and confirm by “OK”
6. Choose “TCP/IP” protocol in Properties ->Network
7. Select taskbar ->Start ->Programs ->Accessories ->Dial-Up Networking Describe your connectivity to the MUSE server modem.
8. Behind Advanced... ->change properties ->Tab “Server” select the correct type of server, protocol TCP/IP and the properties for this protocol

So far it's possible to establish a RAS connection for receiving patient and order information from MUSE, or for transferring examinations to MUSE.

(In advance you should confirm the configuration of RAS/Modem before you start a transfer in CardioSoft. Use explorer.exe or winfile.exe after establishing a connection to a PC via RAS, and try to down-/upload some files)

Example: The most problems occur with Dial-Up Networking ->Advanced... ->change properties ->Tab “Entries” ->Configuration... ->Modem compression and in combination with ->Tab “Server” ->Software compression, as well as with “LCP-Extensions for PPP” and in Tab “Security” with the correct encryption/certification by using Service Packs before Version 3. The switches are dependent strongly on modem characteristics (on both sides) and on configuration of the integrated network with which you linked on it.

9. Connecting Internet Browser to MUSE via modem:
   1. Select taskbar -> Start -> Settings -> Control Panel.
   2. Double-click on “Internet”.
   3. Open tab “Connection”.
   4. Activate “Connect via modem”.
   5. Confirm by “OK”

Patient database reading from MUSE

Prerequisites: Network connection with correct TCP/IP specifications
MUSE Browser software option (BRWS)

To use the MUSE database instead of the local database for selecting patients, you need an account on the MUSE server. Use the following procedure to enter that account information in the CardioSoft application.

1. In CardioSoft, select ***System Configuration*** > ***MUSE***.
2. Check the ***Request MUSE Data*** check box.
3. Select the correct ***MUSE Site*** number.
4. Enter the the ***MUSE Web Server*** address, the ***MUSE User Name***, and the ***MUSE Password***.

   NOTE

   You can enter the MUSE Web Server address in any of the following formats:

Format	Example
Internet name convention	http:\\www.myMuseSvr....
Intranet name convention	myMuseSvr
TCP/IP address	123.456.789.255

5. Change the MUSE ***Port Number***, if necessary.

   It defaults to **80**.
6. If SSL is configured on the MUSE system, check the ***SSL Connection*** check box and enter the appropriate port number.
7. When you are done, click ***OK***.

Configuration of Internet Explorer

Prerequisites: Internet Explorer v6.0 or above
MUSE v5.x or above
Acrobat Reader V4.0 or above

CardioSoft requires an internet browser to read examinations stored in the MUSE database. GE Healthcare recommends installing Internet Explorer v6.0 or above; earlier versions of Internet Explorer have known difficulties working with MUSE. Use the following procedure to configure your browser to work with the CardioSoft and MUSE systems.

1. From the Windows desktop, select ***Start*** > > ***Control Panel*** > ***Internet Options***.
2. Select the ***Connections*** tab.

3. Select the method CardioSoft will use to connect to the MUSE Web server:
   - To connect via modem, either select an existing modem from the list or click ***Add...*** to set up a new modem.
   - To connect via LAN, click the ***LAN settings*** button and select the appropriate method for configuring the LAN settings.
4. Configure the proxy server as appropriate:

   Where you access the proxy server information depends on the selected connection method. For modem, click the ***Settings*** button on the ***Connections*** tab. For LAN, click the ***LAN settings*** button on the ***Connections*** tab. Then do one of the following:

   - If your network uses a proxy server, activate the ***Use a proxy server*** check box and define the server address and port. If necessary, click the ***Advanced*** button to enter additional address information.
   - If your network does not use a proxy server, ensure the ***Use a proxy server*** check box is not checked.
5. When you are done, click ***OK***.
6. Restart the system.

   NOTE

   Some changes to the internet options will not take effect until the operating system restarts.

3.1.12 Metabolic Interface

The system can communicate with the data acquisition device over the workstation's serial port or it can record test data to a shared file on the network.

This section describes:

- the available communication commands
- the serial port settings
- the structure of the serial data string
- the structure of the test data file
- general settings

3.1.12.1 Communication Commands

To enable the serial port communication, select the "Metabolic Cart" check box in System Configuration -> Devices and select the appropriate COM port.

The stress test module can process the following commands from the serial port:

'E'	echo on
'T'	start treadmill
'O'	stop treadmill
'H'	stage hold
'R'	request measurements
'W'	start pretest
'S'	start exercise
'M'	start recovery

3.1.12.2 Serial Port Settings

The default settings for serial port are

parity	no
data bits	8
stop bits	1
baud rate	1200
handshake	no

You can modify the settings for the serial port by modifying the following values in the [CAS_RECORD] section of the file *<Application Data Folder>\CARDIO.INI*.

Field	Values
SpiroParity	0 = no parity 1 = even parity 2 = odd parity
SpiroDataBits	0 = 7 data bits 1 = 8 data bits
SpiroStopBits	0 = 1 stop bit 1 = 2 stop bits
SpiroBaudrate	0 = 300 baud 1 = 600 baud 2 = 1200 baud 3 = 2400 baud 4 = 4800 baud 5 = 9600 baud 6 = 19200 baud 7 = 38400 baud 8 = 56000 baud 9 = 128000 baud
SpiroHandShake	0 = no handshake 1 = XonXoff 2 = hardware handshake 3 = hardware handshake and interpretation of CR and NULL

For example, to configure the serial port for even parity, 7 data bits, 2 stop bits, 9600 baud, and XonXoff, *cardio.ini* would look like this:

```
[CAS_RECORD]
SpiroParity = 1
SpiroDataBits = 0
SpiroStopBits = 1
SpiroBaudrate = 5
SpiroHandShake = 1
```

3.1.12.3 Data String Structure

If the system receives the "R" command (request measurements), the following data string is sent:

[AAAA_BBBB_C_DDDD_E_FFFF_GGGG_HHHH_IIII_JJJJ_KKKK_LLLL_MMMM_]NNPP
where a space is shown as an '_'.

AAAA - Combined Phase and Stage name

"base" - Pretest phase, stage 1
"warm"- Pretest phase, stage 2 or higher
"ramp" - Exercise phase, all stages
"reco" - Recovery phase, all stages

BBBB - Value for load parameter 1 (value 0 if unavailable)

C - Designator for load parameter 1

M - Treadmill Speed in [0.1 mph]
K - Treadmill Speed in [0.1 km/h]
W - Ergometer Load in [W]

DDDD - Value for load parameter 2 (value 0 if unavailable)

E - Designator for load parameter 2

% - Treadmill Grade in [0.1 percent]
U - Ergometer revolutions in [/min] = [rpm]

FFFF - Heart rate in [/min] = [bpm] (value 0 if unavailable)

GGGG - Ventricular Ectopic beats per minute (VE/min)

HHHH - BP Measurement NBR (always -999 since not used)

IIII - Systolic BP in [mmHg] (-999 if unavailable)

JJJJ - Diastolic BP in [mmHg] (-999 if unavailable)

KKKK - ST Level for most significant ECG lead in [0.01 mV] = [0.1 mm] (-999 if unavailable)

LLLL - ST Slope for most significant ECG lead in [0.1 mV/s] (-999 if unavailable)

Remarks concerning the "most significant ECG lead":

- The most significant ECG lead is the lead with the largest ST-depression.
- The leads aVR, aVL and V1 are excluded.
- If no ST segment depression is found, lead V5 is defined as the most significant lead.

MMMM - ST Integral for most significant ECG lead in [µVs] (-999 if unavailable)

NN - Rightmost 2 ASCII characters of checksum expressed hexadecimal in upper case

The checksum is the sum of the numeric values of all characters from "[" to "]"

inclusive. (Example: Numeric value of character 'A' is 65).

PP - Fixed string "CR" for Carriage return

3.1.12.4 Shared File Settings

The shared file output is enabled by the field “SpiroOptionWriteToFile”. If enabled, the system will write the stress test data to a shared file named *ergospir.dat*. By default, the file is stored in *c:\temp*. You can change that setting by modifying the following fields in the [*CAS_RECORD*] section of the file *<Application Data Folder>\LOC_WIN.INI*.

Field	Values
SpiroOptionWriteToFile	0 = Do not write to file 1 = Write to file
SpiroDirectory	*Valid directory path*

For example, if you want the shared file *ergospir.dat* to be written to a directory called *spirapp\data* located on the c:\ drive, the entry in *LOC_WIN.INI* would look like this:

[CAS_RECORD]
SpiroOptionWriteToFile = 1
SpiroDirectory = C:\SPIROAPP\DATA

3.1.12.5 Data File Structure

If the shared file output is enabled, the system will write the following data string to the shared file every five seconds or immediately after phase or stage has changed.

AAAA - Combined Phase and Stage name

"Chck" - Lead check phase, before start of Pretest
"Base" - Pretest phase, stage 1
"Warm"- Pretest phase, stage 2 or higher
"Exer" - Exercise phase, all stages
"Reco" - Recovery phase, all stages
"Stop" - Stress test was finished

BBBB - Value for load parameter 1 (value 0 if unavailable)

C - Designator for load parameter 1

M - Treadmill Speed in [0.1 mph]
K - Treadmill Speed in [0.1 km/h]
W - Ergometer Load in [W]

DDDD - Value for load parameter 2 (value 0 if unavailable)

E - Designator for load parameter 2

% - Treadmill Grade in [0.1 percent]

U - Ergometer revolutions in [/min] = [rpm]

FFFF - Heart rate in [/min] = [bpm] (value 0 if unavailable)

GGGG - Ventricular Ectopic beats per minute (VE/min)

HHHH - BP Measurement NBR (always -999 since not used)

IIII - Systolic BP in [mmHg] (-999 if unavailable)

JJJJ - Diastolic BP in [mmHg] (-999 if unavailable)

KKKK - ST Level for most significant ECG lead in [0.01 mV] = [0.1 mm] (-999 if unavailable)

LLLL - ST Slope for most significant ECG lead in [0.1 mV/s] (-999 if unavailable)

Remarks concerning the "most significant ECG lead":

- The most significant ECG lead is the lead with the largest ST-depression.
- The leads aVR, aVL and V1 are excluded.
- If no ST segment depression is found, lead V5 is defined as the most significant lead.

MMMM - ST Integral for most significant ECG lead in [µVs] (always -999 since not used)

NN - Rightmost 2 ASCII characters of checksum expressed hexadecimal in upper case

The checksum is the sum of the numeric values of all characters from "[" to "]" inclusive. (Example: Numeric value of character 'A' is 65).

PP - Fix string "CR" for Carriage return

Example

Example	
Format:	[AAAA_BBBB_C_DDDD_E_FFFF_GGGG_HHHH_IIII_JJJJ_KKKK_LLLL_MMMM_]NNPP
Bicycle:	[Exer 25 W 0 U 84 5 -999 120 80 -2 0 -999]4ACR
Treadmill:	[Exer 40 K 120 % 85 5 -999 -999 -999 7 7 -999]83CR

		Meaning	Bicycle	Treadmill
AAAA		Combined Phase and Stage name	Exercise phase	Exercise phase
BBBB	C	Load parameter 1 - Value and Designator	Load: 25 W	Speed: 4.0 km/h
DDDD	E	Load parameter 2 - Value and Designator	Revolutions: 0 /min	Grade: 12.0 %
FFFF		Heart rate	84 /min	85 /min
GGGG		VE/min	5	5
HHHH		BP Measurement NBR - not used	-999	-999
IIII		Systolic BP in mmHg	120 mmHg	-999
JJJJ		Diastolic BP in mmHg	80 mmHg	-999
KKKK		ST Level for most significant ECG lead	-0.02 mV	0.07 mV
LLLL		ST Slope for most significant ECG lead	0.00 mV/s	0.70 mV/s
MMMM		ST Integral for most significant ECG lead	-999	-999
NN		Checksum	4A	83
PP		Fix string "CR"	CR	CR

3.1.12.6 General Settings

For serial output and for shared file output:

The availability of the blood pressure values can be controlled by the following entries in the file *<Application Data Folder>\LOC_WIN.INI*:

ExerciseBpGreyoutTime:?
Range: 5..360, default = 60, unit = seconds
The BP values will be greyed out after this period of time

SpiroNegateGreyedBp=?
Range: 0..2, default 1
BP values older than defined with entry ’ExerciseBpGreyoutTime’ will be converted as follows:
0: old BP value will be positive
1: old BP value will be invalid (-999)
2. old BP value will be negative

3.1.13 Configuration of "Complete Patient Information"

When patient demographic data are provided externally, the "Complete Patient Information-Dialog" allows the user to complete missing patient demographic data, depending on the procedure type and the selected configuration.

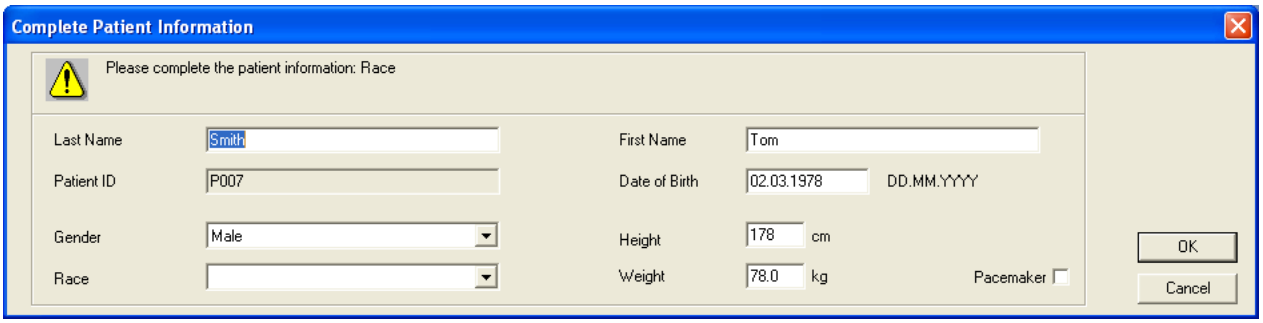

The "Complete Patient Information-Dialog" can be used in the following **scenarios**:

(1) CardioSoft is launched by an EMR (HL7, BDT, GDT) to perform a new test.

(2) CardioSoft performs a new test via an order list (MUSE, DICOM)

(3) CardioSoft performs a new test via the MUSE patient list.

The following items can individually be enabled or disabled per procedure type:
Last name, first name, date of birth, weight, weight, gender, ethnic, pacemaker.

Sequence must be separated by a comma:
Last name, first name, date of birth, height, weight, gender, ethnic, pacemaker

Example in: *<Application Data Folder>\LOC_WIN.INI*:
PAT_ComplDemogrSPI=1,0,1,1,0,1,0,0

Configuration for External tests:
PAT_ComplDemogrUNKNOWN=

Default for scenario (1): All items disabled
Default for scenario (2) and (3): Enable Last name, date of birth

Configuration for Exercise test:
PAT_ComplDemogrCAS=

Default for scenario (1): All items disabled
Default for scenario (2) and (3): Enable Last name, date of birth, gender

Configuration for Spirometry:
PAT_ComplDemogrSPI=

Default for scenario (1): All items disabled
Default for scenario (2) and (3): Enable Last name, date of birth, height, gender

Configuration for Ambulatory Blood Pressure:
PAT_ComplDemogrABP=

Default for scenario (1): All items disabled
Default for scenario (2) and (3): Enable Last name, date of birth

Configuration for HOLTER ECG:
PAT_ComplDemogrLEG=

Default for scenario (1): All items disabled
Default for scenario (2) and (3): Enable Last name, date of birth enabled

Configuration for Resting ECG:
PAT_ComplDemogrRES=

Default for scenario (1):All items disabled
Default for scenario (2) and (3): Enable Last name, date of birth, gender

Configuration for Ergospirometry:
PAT_ComplDemogrESP=

Default for scenario (1): All items disabled
Default for scenario (2) and (3): Enable Last name, first name, date of birth, height, weight, gender

There are different 3 modes using this dialog:

(1) Mode 1

Activation of the dialog:
The dialog comes up if at least one item is enabled.

Display of the dialog:
Enabled items are displayed always.
Disabled items are greyed out.

PAT_ComplDemogrIfEmptyFields=0 (default value for scenario (1))

(2) Mode 2

Activation of the dialog:
The dialog comes up if at least one item is enabled that is empty.

Display of the dialog:
Enabled items are displayed always, whether or not they are empty. Display a hint to indicate which of all enabled items that he has to complete because they are empty.
Disabled items are greyed out.

PAT_ComplDemogrIfEmptyFields=1

(3) Mode 3

Activation of the dialog:
The dialog comes up if at least one item is enabled that is empty.

Display of the dialog:

All empty items are displayed, whether or not they were enabled. Display a hint to indicate which of the empty items he has to complete because they were enabled.
All items that already have values are greyed out.

PAT_ComplDemogrIfEmptyFields=2 (default value for scenario (2) and (3))

3.2 Installation of the Hardlock Modules (Parallel/Serial & USB Type)

If CardioSoft is running without the patient module, some of the options are locked with a hardlock. There are three hardlock modules available: One is the hardlock with ’DB 25 connectors. This hardlock can be connected to the parallel or the serial interface. Another USB hardlock can be connected to the USB port. When using this USB hardlock the hardlock has to be plugged into one free USB port of the PC. If a USB server hardlock module is connected to a USB port of a server, up to 250 CardioSoft without the patient module can be enabled. An FLXX option activation key is required for this functionality. When using the parallel/serial hardlock, then using an environment variable the program can be informed where to look for the hardlock. In the default setting a search for the hardlock is made at the interfaces LPT1 and LPT2 only. In addition, using these environment variables, certain PC configurations, which could lead to problems, can be indicated.

Port Identification	**Meaning:**
p = parallel	normal parallel port
s = serial	normal serial port
e = ECP	parallel port in ECP mode
n = NEC (Japan)	As the Japanese NEC models have a different port configuration, a special operation can be activated with this parameter. A separate NEC API is thus no longer necessary.
C = Compaq Contura Dockingbase	The dockingbase multiplexer (to toggle between the parallel port and Ethernet adapter) is reset on the parallel port to scan for the hardlock.
I = IBM PS/2	The specification for IBM PS/2 rectifies an error in reprogramming the ports for certain video drivers under Windows (hardlock is no longer found after Windows has been started). This effect can now only be activated via the specification of the environment variables.

Example:

in the file autoexec.bat

SET HL_SEARCH=378p, 2f8s

The hardlock is searched for at the parallel interface at address 0x378 and the serial interface at address 0x2f8.

If the patient module is connected to LPT1, the hardlock at LPT2 may not be identified. In this case use

SET HL_SEARCH=278p

to inform hardlock API that the search for LPT2 should commence. The ports are generally located at the following addresses:

COM1	3F8
COM2	2F8
COM3	3E8
COM4	2E8
LPT 1	378
LPT 2	278

Define the protocol used for accessing the HL Server.

Set HL_SERACH = IXP

IPX	HL server searched for via IPX or SPX
OP	HL server searched for via TCP/IP
NetBios	HL server searched for via NetBios

IP is searched first by default.

(Optimize search via TCP/IP protocol.)

Set HLS_IPADRR = <server name>

For detailed information about installation of the server dongle, please refer to the Installation Guide.

For more hardlock details and how to use Alladin DiagnostiX, please refer to the Hardlock's User Manual (see on CD, folder Hardlock Server).

3.3 MARS PC Application Configuration

If using MARS PC as the Holter ECG program, do the following:

1. Select the ***Devices*** tab on the ***System Configuration*** window.
2. Click the ellipses (**…**) button at the end of the ***Path to Holter ECG Program*** field.
3. Browse to the MARS ***superapp.exe*** file and click OK.

3.4 DICOM Interface Configuration

3.4.1 Terminology

IHE:	Integrating the Healthcare Enterprise
DICOM:	Digital Imaging and Communication in Medicine
SCP:	DICOM Service Class Provider

SCU:	DICOM Service Class User
PPS:	Performed Procedure Step
DSS:	Department System Scheduler
MWL:	Modality Work List
AE title:	Application entity title

3.4.2 General

The DICOM Interface is enabled with the option key DICM.

A valid DICM option key provides the DICOM tab in the System Configuration which allows you to configure the DICOM Interface.

The service password (see "System Configuration/Service Screen" on page 3-22) is needed to access the DICOM tab.

There are some items that affect the workflow/ User Interface of the system (e.g. work list configuration, archiving).

Those items should be reviewed with the clinical staff before using the systems.

The default setup is the setup recommended by the IHE Stress test profile.

Please be aware that only the DICOM Conformance Statement (2040396-087) provides all necessary informations to assess the interoperability to other systems.

3.4.3 Setup

To complete a standard IHE configuration the following steps are needed:

DICOM tab access

- Go to the *System Configuration*, select the *DICOM* tab and enter the service password.

Perform local setup

On the *DICOM* tab, perform the following local setup (mandatory for each workstation):

NOTE
All data entered in this section is automatically stored in the local file CA_SYS.INI (section [DICOM]), located in the Application Data Folder.

- Enter the AE title for this workstation in the SCU AE title field.

Perform server-based setup

On the DICOM tab, perform the following server-based DICOM setup (done once, possible at any workstation if you have a CASE/CardioSoft network).

NOTE
All data entered in this section is automatically stored in the server-based file DICOM.INI, located where the database is installed.

- Enter the network configuration for DSS/Order Filler and PPS Manager (may be identical to the Order Filler) using the button "Network Configuration" in the section "Worklist".

  AE title, host name and port number of the remote host are required to complete this configuration.

  Click both "Verify remote host" buttons to check the configuration (verification service, using ECHO Messages).

- Enter the network configuration for the Image Archive and Image Manager (may be identical to the Image Archive) using the button "Network Configuration" in the section "Image Archiving".

  AE title, host name and port number of the remote host are required to complete this configuration.

  Click both "Verify remote host" buttons to check the configuration (verification service, using ECHO Messages).

  The SCU port is used to receive storage commitment responses. Click the button "Verify SCU port" to check the configuration (verification service, using ECHO messages).

- Configure the extended character set for the DICOM Interface depending on the language used: add the item CHARACTER_SET to “Special DICOM setup items without UI”).

Check the DICOM setup

- Click the "Check connection" button and verify that no error occurs.
- In case of errors, click "View error log..." and check the listed error message.
- Confirm the dialog.

Verify Order List button

- Click "New test" and verify that the "Order List" button is enabled in the patient list dialog.

Verify the protocol code mapping

The CARDIO application receives protocol schema and codes from the DSS/ Order Filler and maps them to the internally used procedure types Exercise test, Resting ECG, Spirometry, Ambulatory Blood Pressure or Ergospirometry.

The protocol code mapping is responsible for starting the correct procedures out of the DICOM work list.

Therefore it is is crucial that the received and the used protocol schema and codes match.

To verify this, create at least one order per desired procedure type in the DSS/ Order Filler system.

Then bring up the Order List via patient list dialog.

Select each of the orders and verify that the "Start procedure" button is always active.

If this button is disabled for one of the orders, the corresponding protocol code mapping has to be modified.

The CARDIO application has implemented several sets of predefined protocol schema/codes (see chapter "Default protocol schema/codes").

Either the DSS/ Order Filler adapts it's used protocol schema/codes to this predefined schema/codes or the protocol code mapping has to be modified within this system (see chapter "Protocol Code Mapping").

3.4.4 Special DICOM setup items without UI

File DICOM.INI in database folder, section [DICOM]:

- Character set for the DICOM Interface:
  The following extended character sets are supported:

  CHARACTER_SET=0 (Default 0; range: 0 to 4)

  0: ISO_IR 6 (ASCII)
  1: ISO_IR 100 (ISO 8859-1: Latin 1: Western European languages)
  2: ISO_IR 101 (ISO 8859-2: Latin 2: Central/Eastern European languages)
  3: ISO_IR 144 (ISO 8859-5: Cyrillic: Russian)
  4: ISO_IR 148 (ISO 8859-9: Latin 5: Turkish)

- Use the selected ECG Report formats of the Exercise test setup for ECG Waveform Images (only valid if the "General ECG Waveform SOP Class" is disabled and 12-leads are selected in the Exercise test setup):

  IA_USE_SELECTED_ECG_REPORT_FORMATS=1 (Default: 0, use always 1x10s format)

- Timeout value for reading DICOM messages.

  READ_MESSAGE_TIMEOUT=10 (Default: 5 seconds; Range: 1 to 100s)

- Transfer syntax for DICOM File Export.

  FILE_TRANSFER_SYNTAX=1 (Default: 0; range 0 to 3)

  0: Explicit Little Endian
  1: Implicit Little Endian
  2: Explicit Big Endian
  3: Implicit Big Endian

- ECHO_INTERVAL for sending ECHO-RQ during “Verify remote host” action.

  ECHO_INTERVAL_MS=1000 (Default: 2000; Range: 500 to 10000 ms)

- ECHO Retry Number for sending ECHO_RQ during “Verify remote host” action.

  ECHO_RETRY=5 (Default: 3; Range 1 to 20000)

3.4.5 Protocol Code Mapping

3.4.5.1 General

DICOM Protocol Codes are grouped in so called schemas.

There is a predefined DICOM protocol schema ("SRT") for Exercise test that CASE/CardioSoft uses as default data.

However, the DSS/Order filler may use other schemas and protocol codes.

In this case you can add or adjust schemas and protocol codes.

CASE/CardioSoft has also implemented it's own schema per procedure type that could be used by the DSS/Order filler.

The DICOM interface provides the Protocol Code Mapping in both directions:

Scheduled test (Incoming Protocol Codes)

NOTE

The DICOM worklist response of the DSS/Order Filler must include the Scheduled Protocol Code Sequence (DICOM tag 0040,0008).

That sequence is used to perform the Protocol Code mapping for scheduled tests and must contain the Protocol Code in its Code Value (DICOM tag 0008,0100) and the Scheme in its Scheme Designator (DICOM tag 0008,0102).

Using the DICOM worklist, the received (scheduled) DICOM Protocol Schema/ Code is mapped to the

- CASE/CardioSoft Procedure Type (e.g. Exercise test, Resting ECG...) and to the
- CASE/CardioSoft Protocol Code I and II for detailed information (e.g. for Exercise test: Use of treadmill or ergometer. Use of protocol, e.g. BRUCE, WHO...).

If CASE/CardioSoft cannot find a corresponding procedure type, the "Start examination" button in the DICOM worklist is disabled.

Performed test (Outgoing Protocol Codes)

The DICOM Protocol Schema/Code sent out (Performed Protocol Schema/ Code) is built by using the performed

- CASE/CardioSoft Procedure Type (Exercise test, Resting ECG...) and the
- CASE/CardioSoft protocol code I and II for detailed information (e.g. for Exercise test: Treadmill or Ergometer. Exercise test protocol, e.g. BRUCE, WHO...).

The DICOM Performed Protocol Code may be different than the DICOM Scheduled Protocol Code (but identical schema), because the user could have changed it.

Example:

The user starts a scheduled order, that initiates an Exercise test with a Treadmill and the BRUCE protocol.

Before going to the pre-test phase, the user switches to the NAUGHTON protocol.

So the DICOM Performed Protocol Code reflects what was executed in reality.

It is essential to have the correct Protocol Code Mapping in both directions.

3.4.5.2 Method of Protocol Code mapping

The DICOM Protocol Code Mapping is achieved by sections and entries in the file <Installation database folder>\DICOM.INI.

Changing or appending additional schemas for the mapping can only be done by manually changing the data in this file using an editor (e.g. Notepad).

Changes always affect all workstations and clients in the CASE/CardioSoft network.

The DICOM Protocol Schema/ Code applies to the DICOM tag 0040, 0008 (Scheduled Protocol Code Sequence) and 0040, 0260 (Performed Protocol Code Sequence).

3.4.5.3 Syntax of the Protocol Code mapping per schema:

Example: SRT_NO_0=STRESS,P2-7131C,1,BALKE

Four parameters are used per protocol code in a schema section.

The used delimiter is ",".

1. CASE/CardioSoft Procedure Types: "STRESS" (Exercise test); "ABP" (Ambulatory Blood Pressure); "SPI" (Spirometry); "ECG" (Resting ECG); "ESPIRO" (Ergospirometry)
2. DICOM Performed Protocol Code: Depends on the used scheme. If a predefined DICOM schema is used, the protocol codes are well defined.
   If a user defined scheme used, it depends on the system’s requirements.
3. CASE/CardioSoft Protocol Code I (Value): Depends on CASE/CardioSoft Procedure Type
   For Exercise test/ Ergospirometry: 0 is Bicycle Ergometer, 1 is Treadmill
   For all other procedure types this is not yet used (= zero).
4. CASE/CardioSoft Protocol Code II (String): Depends on CASE/CardioSoft Procedure Type
   For Exercise test/ Ergospirometry: Protocol name that must match the Exercise test protocol names listed in the Exercise test configuration (e.g. "BRUCE").
   For all other procedure types this is not yet used.

3.4.5.4 Adding a new Protocol Schema

Example for adding a new Protocol Schema including new Protocol Codes required by the DSS/Order Filler:

1. Determine the procedure type for which you want to add a new schema and use the corresponding test type identifier, e.g.
   Procedure type is Exercise test --- corresponding procedure type identifier is "STRESS".
2. Append the new schema for unscheduled tests in section [PROTOCOL_SCHEMES], using the item with the corresponding procedure type identifier, e.g.
   New schema is "ABCD":
   STRESS_PROT_SCHEME_UNSCHED=SRT,99IHE,CSO_STRESS,ABCD

3. Use the new schema as default protocol schema for the determined procedure type in section [PROTOCOL_SCHEMES], if the performed protocol code could not be mapped to a DICOM protocol code, e.g.

   STRESS_PROT_SCHEME_USED_IF_UNKNOWN=ABCD
4. Determine DICOM default protocol codes for this schema, if the performed protocol code could not be mapped to a DICOM protocol code, e.g.

   "ABCD_ERG_UNKNOWN", if CASE/CardioSoft Protocol Code I is 0 (Ergometer)

   or

   "ABCD_TRM_UNKOWN", if CASE/CardioSoft Protocol Code I is 1 (Treadmill)
5. Use the new DICOM Protocol Codes as required by the DSS/Order Filler for this procedure type, e.g.

   "ABCD_WHO" for Ergometer with WHO-Protocol.
   "ABCD_BRUCE" for Treadmill with BRCUE-Protocol.
   Number of new DICOM Protocol Codes is 2.
6. Add the new schema as a new section, using the syntax as described, e.g.

   [ABCD]
   ABCD_UNKNOWN_0_PROT_CODE=ABCD_ERG_UNKNOWN
   ABCD_UNKNOWN_1_PROT_CODE=ABCD_TRM_UNKNOWN
   ABCD_NO=2
   ABCD_NO_0=STRESS,ABCD_WHO,0,WHO
   ABCD_NO_1=STRESS,ABCD_BRUCE,1,BRUCE

3.4.5.5 Default protocol schema and codes used in DICOM.INI

[PROTOCOL_SCHEMES]

; List of protocol schemas per procedure type for the unscheduled case, max. 10 schemas allowed,

; delimiter is ","

STRESS_PROT_SCHEME_UNSCHED=SRT,99IHE,CSO_STRESS

ESPIRO_PROT_SCHEME_UNSCHED=SRT,99IHE,CSO_ESPIRO

ECG_PROT_SCHEME_UNSCHED=CSO_ECG

ABP_PROT_SCHEME_UNSCHED=CSO_ABP

SPI_PROT_SCHEME_UNSCHED=CSO_SPI

; Default performed protocol schema used, if the performed protocol code could not be

; mapped to a DICOM protocol code

STRESS_PROT_SCHEME_USED_IF_UNKNOWN=CSO_STRESS

ESPIRO_PROT_SCHEME_USED_IF_UNKNOWN=CSO_ESPIRO

ECG_PROT_SCHEME_USED_IF_UNKNOWN=CSO_ECG

ABP_PROT_SCHEME_USED_IF_UNKNOWN=CSO_ABP

SPI_PROT_SCHEME_USED_IF_UNKNOWN=CSO_SPI

[SRT]

; DICOM protocol scheme SRT for procedure type Exercise test

; list of defined protocol codes; first item must specify the number of protocol codes in this schema.

SRT_NO=9

SRT_NO_0=STRESS,P2-7131C,1,BALKE

SRT_NO_1=STRESS,P2-7131A,1,BRUCE

SRT_NO_2=STRESS,P2-7131D,1,ELLESTAD

SRT_NO_3=STRESS,P2-7131B,1,MODBRUCE

SRT_NO_4=STRESS,P2-713A1,1,MODNAUGHTON

SRT_NO_5=STRESS,P2-713A0,1,NAUGHTON

SRT_NO_6=STRESS,P2-7131F,1,PEPPER

SRT_NO_7=STRESS,P2-7131E,1,RAMP

SRT_NO_8=STRESS,P2-31102,0,WHO

[99IHE]

; DICOM protocol scheme 99IHE for procedure type Exercise test

; list of defined protocol codes; first item must specify the number of protocol codes in this schema.

99IHE_NO=4

99IHE_NO_0=STRESS,PHARMSTRESS,1,MODBRUCE

99IHE_NO_1=STRESS,PERSANTINE,1,PERSANTINE

99IHE_NO_2=STRESS,ADENOSINE,1,ADENOSINE

99IHE_NO_3=STRESS,DOBUTAMINE,1,DOBUTAMINE

[CSO_STRESS]

; User defined protocol scheme for procedure type Exercise test

; outgoing default protocol codes for this scheme

CSO_STRESS_UNKNOWN_0_PROT_CODE=CSO_ERG_UNKNOWN

CSO_STRESS_UNKNOWN_1_PROT_CODE=CSO_TRM_UNKNOWN

; list of defined protocol codes; first item must specify the number of protocol codes in this schema.

CSO_STRESS_NO=21

CSO_STRESS_NO_0=STRESS,CSO_WHO,0,WHO

CSO_STRESS_NO_1=STRESS,CSO_WHO50,0,WHO50

CSO_STRESS_NO_2=STRESS,CSO_WHO75,0,WHO75

CSO_STRESS_NO_3=STRESS,CSO_HOLLMANN,0,HOLLMANN

CSO_STRESS_NO_4=STRESS,CSO_BAL,0,BAL

CSO_STRESS_NO_5=STRESS,CSO_STD.FRANCE,0,STD.FRANCE

CSO_STRESS_NO_6=STRESS,CSO_MODWHO,0,MODWHO

CSO_STRESS_NO_7=STRESS,CSO_CONCONI,0,CONCONI

CSO_STRESS_NO_8=STRESS,CSO_BRUCE,1,BRUCE

CSO_STRESS_NO_9=STRESS,CSO_MODBRUCE,1,MODBRUCE
CSO_STRESS_NO_10=STRESS,CSO_NAUGHTON,1,NAUGHTON
CSO_STRESS_NO_11=STRESS,CSO_ELLESTAD,1,ELLESTAD
CSO_STRESS_NO_12=STRESS,CSO_MODBALKE,1,MODBALKE
CSO_STRESS_NO_13=STRESS,CSO_USAFSAM,1,USAFSAM
CSO_STRESS_NO_14=STRESS,CSO_SLOWUSAFSAM,1,SLOWUSAFSAM
CSO_STRESS_NO_15=STRESS,CSO_CORNELL,1,CORNELL
CSO_STRESS_NO_16=STRESS,CSO_BALKE,1,BALKE
CSO_STRESS_NO_17=STRESS,CSO_MODBALKEWARE,1,MODBALKE-WARE
CSO_STRESS_NO_18=STRESS,CSO_ADENOSINE,1,ADENOSINE
CSO_STRESS_NO_19=STRESS,CSO_DOBUTAMINE,1,DOBUTAMINE
CSO_STRESS_NO_20=STRESS,CSO_PERSANTINE,1,PERSANTINE

[CSO_ESPIRO]
; User defined protocol scheme for procedure type Ergospirometry test

; outgoing default protocol codes for this scheme
CSO_ESPIRO_UNKNOWN_0_PROT_CODE=CSO_ERG_UNKNOWN
CSO_ESPIRO_UNKNOWN_1_PROT_CODE=CSO_TRM_UNKNOWN

; list of defined protocol codes; first item must specify the number of protocol codes in this schema.
CSO_ESPIRO_NO=21
CSO_ESPIRO_NO_0=ESPIRO,CSO_E_WHO,0,WHO
CSO_ESPIRO_NO_1=ESPIRO,CSO_E_WHO50,0,WHO50
CSO_ESPIRO_NO_2=ESPIRO,CSO_E_WHO75,0,WHO75
CSO_ESPIRO_NO_3=ESPIRO,CSO_E_HOLLMANN,0,HOLLMANN
CSO_ESPIRO_NO_4=ESPIRO,CSO_E_BAL,0,BAL
CSO_ESPIRO_NO_5=ESPIRO,CSO_E_STD.FRANCE,0,STD.FRANCE
CSO_ESPIRO_NO_6=ESPIRO,CSO_E_MODWHO,0,MODWHO
CSO_ESPIRO_NO_7=ESPIRO,CSO_E_CONCONI,0,CONCONI
CSO_ESPIRO_NO_8=ESPIRO,CSO_E_BRUCE,1,BRUCE
CSO_ESPIRO_NO_9=ESPIRO,CSO_E_MODBRUCE,1,MODBRUCE
CSO_ESPIRO_NO_10=ESPIRO,CSO_E_NAUGHTON,1,NAUGHTON
CSO_ESPIRO_NO_11=ESPIRO,CSO_E_ELLESTAD,1,ELLESTAD
CSO_ESPIRO_NO_12=ESPIRO,CSO_E_MODBALKE,1,MODBALKE
CSO_ESPIRO_NO_13=ESPIRO,CSO_E_USAFSAM,1,USAFSAM
CSO_ESPIRO_NO_14=ESPIRO,CSO_E_SLOWUSAFSAM,1,SLOWUSAFSAM
CSO_ESPIRO_NO_15=ESPIRO,CSO_E_CORNELL,1,CORNELL
CSO_ESPIRO_NO_16=ESPIRO,CSO_E_BALKE,1,BALKE
CSO_ESPIRO_NO_17=ESPIRO,CSO_E_MODBALKEWARE,1,MODBALKE-WARE
CSO_ESPIRO_NO_18=ESPIRO,CSO_E_ADENOSINE,1,ADENOSINE
CSO_ESPIRO_NO_19=ESPIRO,CSO_E_DOBUTAMINE,1,DOBUTAMINE

CSO_ESPIRO_NO_20=ESPIRO,CSO_E_PERSANTINE,1,PERSANTINE

[CSO_ECG]

; User defined protocol scheme for procedure type Resting ECG

; outgoing default protocol codes for this schema

CSO_ECG_UNKNOWN_0_PROT_CODE=CSO_ECG_UNKNOWN

; list of defined protocol codes; first item must specify the number of protocol codes in this schema.

CSO_ECG_NO=1

CSO_ECG_NO_0=ECG,CSO_ECG,0,Resting ECG

[CSO_ABP]

; User defined protocol scheme procedure procedure type Ambulatory Blood Pressure

; outgoing default protocol codes for this schema

CSO_ABP_UNKNOWN_0_PROT_CODE=CSO_ABP_UNKNOWN

; list of defined protocol codes; first item must specify the number of protocol codes in this schema.

CSO_ABP_NO=1

CSO_ABP_NO_0=ABP,CSO_ABP,0,ABP-Test

[CSO_SPI]

; User defined protocol scheme for procedure type Spirometry

; outgoing default protocol codes for this schema

CSO_SPI_UNKNOWN_0_PROT_CODE=CSO_SPI_UNKNOWN

; list of defined protocol codes; first item must specify the number of protocol codes in this schema.

CSO_SPI_NO=1

CSO_SPI_NO_0=SPI,CSO_SPI,0,Spirometry-Test

;The user can add other protocol schemas or change existing protocol schemas as needed, but the required syntax must be followed.

3.4.6 Description of Dialogs

3.4.6.1 DICOM tab

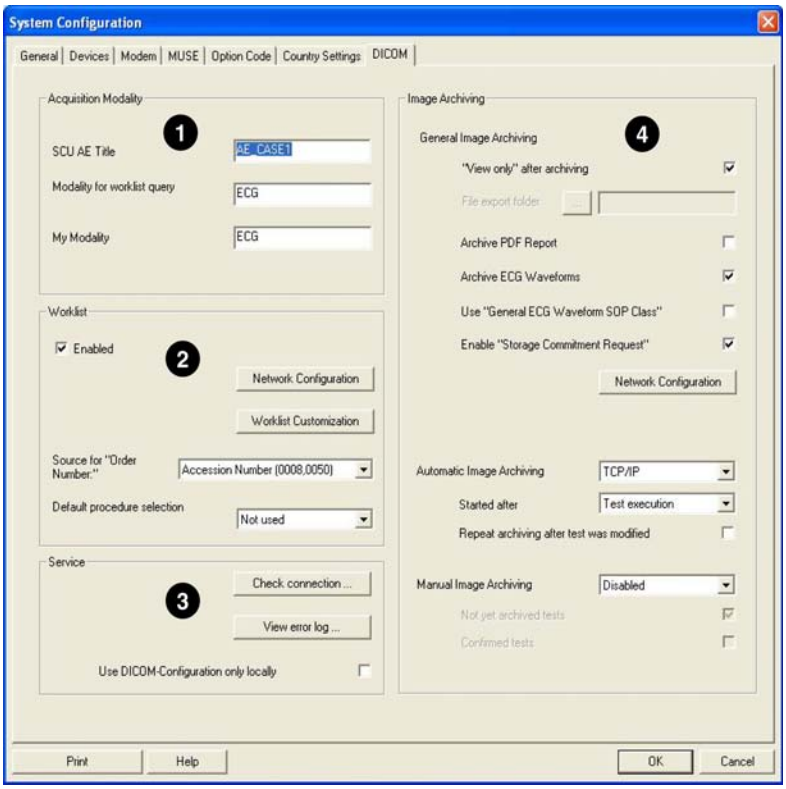

Figure 1

1. **Acquisition modality** (configuration affects this workstation)
   a. SCU AE-title (Unique ID for this workstation, mandatory)
   b. Modality for the worklist query (Default: Orders for modality "ECG")
   c. Own Modality (Default: "ECG")
2. **Worklist** (configuration affects all workstations in the CASE/CardioSoft network)
   a. DICOM Work list function (Default: Enabled)
   If the Work list function is disabled, the system does not connect to the DSS/Order Filler and the PPS Manager at all.
   Only the Image Archiving is done, if it is enabled.
   b. Network Configuration
   See description Figure 2
   c. Worklist Customization
   See description Figure 4
   d. DICOM Source for the Order number (part of the test information):
      - Accession number (0008,0050)
      - Requested Procedure ID (0040,1001)
      - Scheduled Procedure Step ID (0040,0009)

- Not used (blank)

e. Default procedure type for starting the test if the scheduled protocol code did not match:

- Exercise test
- Resting ECG
- Spirometry
- ABP
- Ergospirometry
- Not used

3. **Service** support

a. Check the DICOM-Interface according to the DICOM configuration setup: The following checks are implemented:

•DICOM library (Merge3-COM) initialization

- "Open Association" and "Close Association" action to the DSS/Order filler is performed, if the work list is enabled; the Service List [DMWL_Service_List] in file MERGECOM.APP is used for association negotiation.
- "Open Association" and "Close Association" action to the PPS Manager is performed, if the work list is enabled; the Service List [MPPS_Service_List] in file MERGECOM.APP is used for association negotiation.
- "Open Association" and "Close Association" action to the Image Archive is performed, if one of the TCP/IP functions for image archiving is enabled and the ECG Waveform object is enabled and the "General ECG Waveform Object SOP Class" is disabled; the Service List [IA_Service_List_12LECG] in file MERGECOM.APP is used for association negotiation.
- "Open Association" and "Close Association" action to the Image Archive is performed, if one of the TCP/IP functions for image archiving is enabled and the ECG Waveform object is enabled and the "General ECG Waveform Object SOP Class" is enabled; the Service List [IA_Service_List_GenECG] in file MERGECOM.APP is used for association negotiation.
- "Open Association" and "Close Association" action to the Image Archive is performed, if one of the TCP/IP functions for image archiving is enabled and the PDF Report object is enabled; the Service List [IA_Service_List_EncPDF] in file MERGECOM.APP is used for association negotiation.
- "Open Association" and "Close Association" action to the Image Manager is performed, if one of the TCP/IP functions for image archiving is enabled and the "Storage Commitment Request" is enabled; the Service List [IM_Service_List] in file MERGECOM.APP is used for association negotiation.

The results are logged in the file "<Application Data Folder>\DICOMLOG\DicomLog.txt".

b. View error log

The DICOM-Interface logs its events using 3 files:

- <Application Data Folder>\DICOMLOG\DicomLog.txt (viewed automatically by using this button; includes the most DICOM-Interface events)

- <Application Data Folder>\DICOMLOG\DicomLogThread.txt (can only be manually displayed; includes events logged by the DICOM Listener Thread)
- <Application Data Folder>\Merge.log (this comes from the DICOM MergeCOM-3 library (is not considered here).

The DICOM-Interface uses 2 levels of event logging.

The default event logging level is level 0, which is used for errors.

Changing the level to level 1 has the following effect:

- Adds more informations (that are not necessarily errors) to the log files
- Lists the DICOM messages of one transaction as files in the DICOM LOG folder

To change the event logging level, use the Notepad to edit the file CA_SYS.INI in program folder, section [DICOM], entry DICOM_LOG_LEVEL=1.

c. Local usage of the DICOM setup:

- Use the server-based DICOM setup (default). In a CASE/CardioSoft network all workstations use one server-based DICOM setup.
- Use local DICOM setup. In a CASE/CardioSoft network you can switch the server-based DICOM setup of this workstation to a local setup that affects only this workstation.

4. **Image Archiving** (configuration affects all workstations in the CASE/CardioSoft network)

a. Set the test to "Read only" in the database after a successful image archiving (when the test was set to "Archived (DCM)" in the test list).

NOTE
Archiving occurs at different times, see 4i

b. File export folder configuration for automatic or manual image archiving via file export (UNC is supported)

c. Image archiving includes the PDF report of the test (report format is as configured for the print report in the modality)

d. Image archiving includes the following raw ECG Waveforms of the Exercise test:

- The first 12SL ECG strip in pretest phase (as "Resting ECG"), if available.
- The last ECG strip in pretest phase (as "Baseline ECG"), if available.
- The last ECG strip per stage in exercise phase (as "Exercise ECG"), if available.
- The last ECG strip in recovery phase (as "Post Exercise ECG"), if available.

e. Use the "General ECG Waveform SOP Class" for archiving ECG Waveforms (instead of "12-Lead ECG Waveform SOP Class"):
There may be two scenarios to enable this item:

- The Image Archive cannot process/view the DICOM 12-lead ECG Waveform object.
- The Exercise test is perfomed with 3-, 6- or 15 leads.

f. Enable "Storage Commitment transaction"

Some Image Managers may not have the ability to process the "Storage Commitment transaction". In this case uncheck this item.

g. Network configuration (see section “Network Configuration - Image Manager, Image Archive” on page 3-50)

h. Function of automatic image archiving

The following functions are available for the automatic image archiving:

- Perform the automatic archiving via TCP/IP (default; uses the Image Archive SCP configuration and the Image Manager SCP configuration, see 4g)
- Perform the automatic archiving via File Export. The destination folder of 4b is used. The file name is used as configured in the Export setup dialog (see User Manual, System Configuration)
- Disable the automatic archiving

i. Start automatic image archiving

- Initiate the archiving of a test automatically after Test Execution
- Initiate the archiving of a test automatically after Test Confirmation

j. Repeat automatic image archiving after a test modification.

A test modification after archiving it is only possible, if the test was not yet set to "Read Only" (see 4a).

k. Function of manual image archiving

Manual image archiving is not intended for the normal workflow.
It is accessible through a button in the test list, if it was enabled here.
One or more tests can be selected and be archived manually.
The following functions are available for the manual image archiving:

- Perform the manual archiving via TCP/IP (uses the Image Archive SCP configuration and the Image Manager SCP configuration, see 4g)
- Perform the manual archiving via File Export (uses the destination folder of 4b and the filename as configured in the Export setup dialog, see User Manual, System Configuration)
- Disable the manual archiving (default)

l. Use not yet archived tests for manual image archiving

Archive all tests or only tests, that were not yet archived.

m. Use reviewed (confirmed) tests for manual image archiving

Archive all tests or only tests, that were reviewed before.

3.4.6.2 Network configuration - DSS/Order Filler, PPS Manager

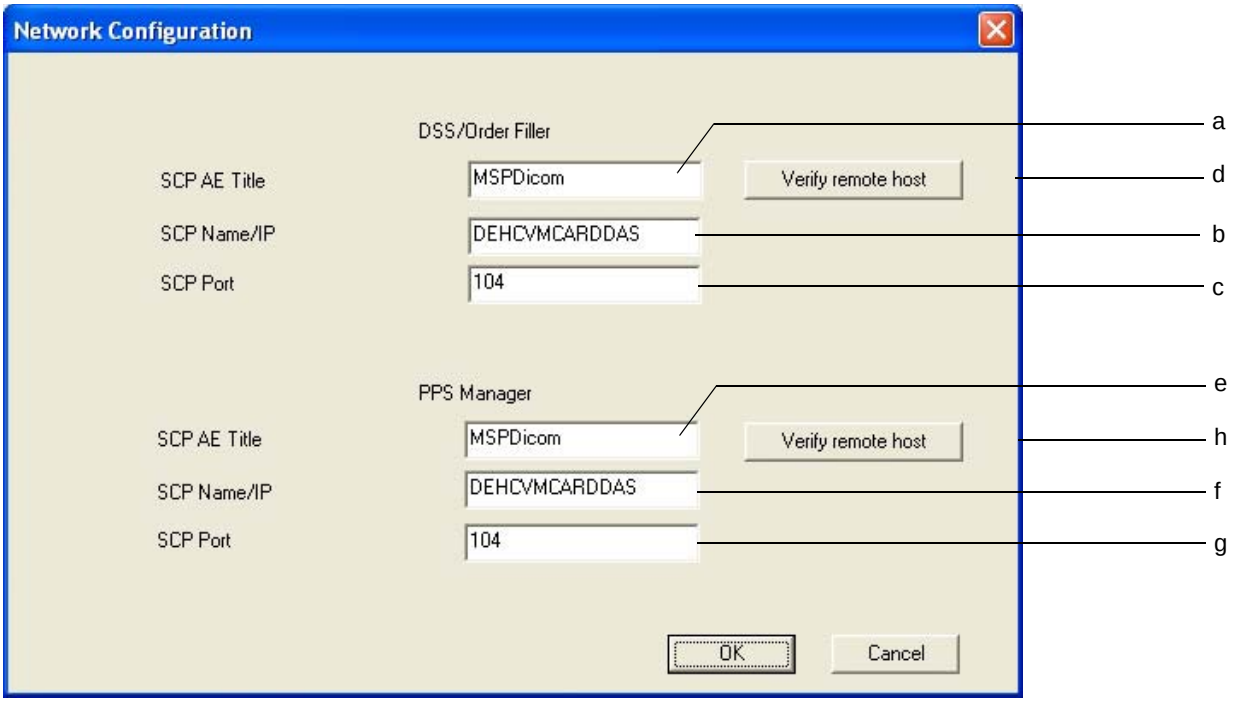

Figure 2

The following data are stored server-based (unless local storage was explicitly set in the configuration) accessible for all CASE/CardioSoft Workstations and Clients (file DICOM.INI in Database folder):

a DSS/Order filler SCP AE Title
b DSS/Order filler SCP IP/Host name
c DSS/Order filler SCP Port number
d DSS/Order filler verify remote host
e PPS Manager SCP AE Title
f PPS Manager SCP IP/Host name
g PPS Manager SCP Port number
h PPS Manager verify remote host

3.4.6.3 Network Configuration - Image Manager, Image Archive

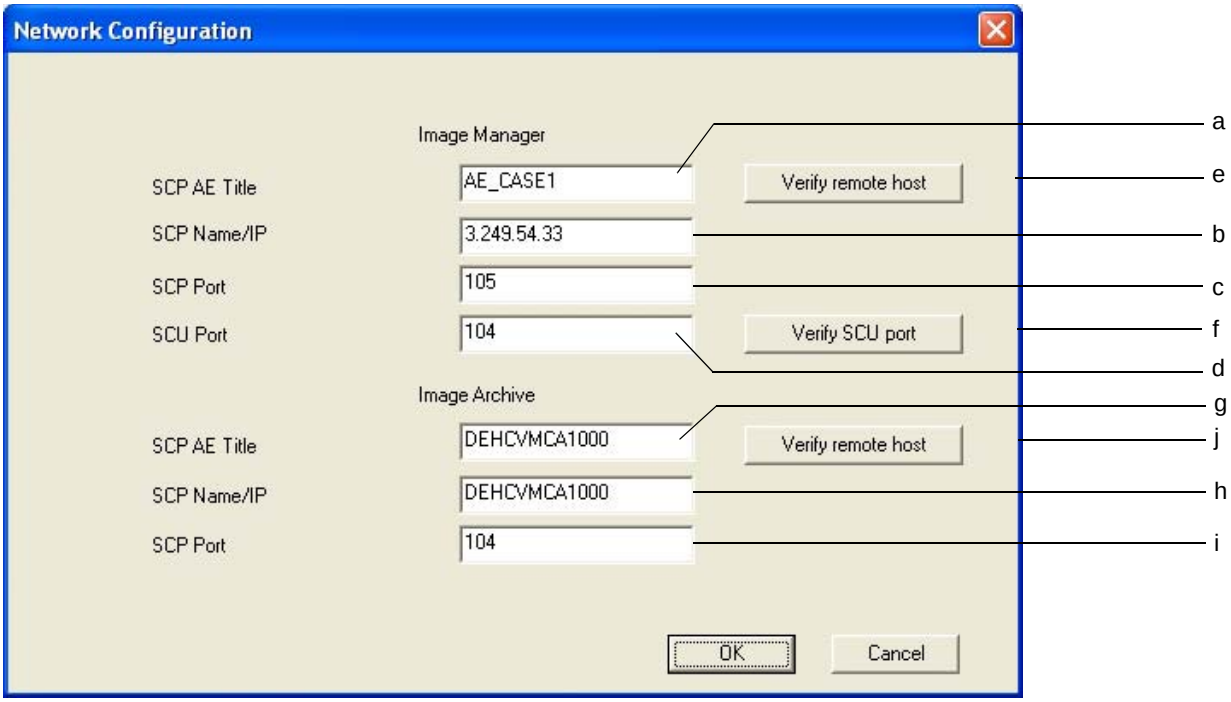

Figure 3

The following data are stored server-based (unless local storage was explicitly set in the configuration) accessible for all CASE/CardioSoft Workstations and Clients (file DICOM.INI in Database folder):

a Image Manager SCP AE Title
b Image Manager SCP IP/Host name
c Image Manager SCP Port number
d Image Manager SCU Port number (for Storage commitment responses)
e Image Manager verify remote host
f Image Manager verify reception on SCU port
g Image Archive SCP AE Title
h Image Archive SCP IP/Host name
i Image Archive SCP Port number
j Image Archive verify remote host

3.4.6.4 Worklist customization

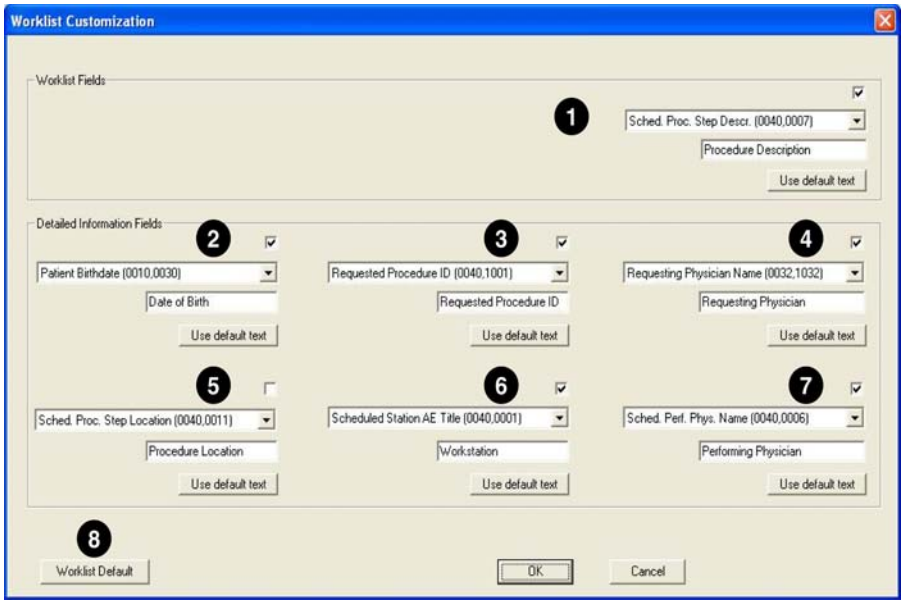

Figure 4

The worklist customization dialog allows to customize the following fields in the DICOM worklist:

1. Worklist fields (correspond to the last column in the DICOM worklist)

2...7. Six detailed information fields (correspond to the fields in the detailed information section of the DICOM worklist)

   They are made up of identical elements

   a. Check box: allows you to enable or disable the corresponding field in the DICOM worklist.

   b. Drop-down list: available DICOM data object to select

   c. Text box for entry of the DICOM data object prompt

   d. *Use default text* button to restore the default text prompt for the selected DICOM data object

8. *Worklist Default* button to reset all fields of the DICOM worklist to their default values.

For your notes

4 Acquisition Modules for CardioSoft

CAUTION
Disconnect power and signal lines to PC and patient before servicing the device.

4.1 Controlling Electrostatic Discharge Damage

All external connector inputs and outputs of the device are designed with protection from ESD damage. However, if the device requires service, exposed components and assemblies contained within are susceptible to ESD damage from sources including human hands, non-ESD protected work stations, and/or improperly grounded test equipment.

CAUTION
The system contains components that are susceptible to electrostatic discharge damage. Observe all static precautions while performing service. Failure to observe these precautions may result in failure of components.

The following guidelines help make a service workstation more resistant to the ESD damage:

- Discharge any static charge you may have built up before handling semiconductors or assemblies containing semiconductors.
- A grounded, antistatic wristband (3M part number 2046 or equivalent) or heel strap should be worn at all times while handling or repairing assemblies containing semiconductors.
- Use properly grounded soldering and test equipment.
- Use a static-free work surface (3M part number 8210 or equivalent) while handling or working on assemblies containing semiconductors.
- Do NOT remove semiconductors or assemblies containing semiconductors from antistatic containers (Velo-stat bags) until absolutely necessary.
- Make sure power to an assembly is turned off before removing or inserting a semiconductor.
- Do NOT slide semiconductors or electrical/electronic assemblies across any surface.
- Do NOT touch semiconductor leads unless absolutely necessary.

- Semiconductors and electrical/electronic assemblies should be stored only in antistatic bags or boxes.

These guidelines may not guaranty a 100% static-free workstation, but greatly reduce the potential for failure of any electrical/electronic assemblies.

4.2 CAM-USB

NOTE

Throughout this document, the term “CAM-USB Interface Box” refers to both the CAM-USB Interface Box V1 and the CAM-USB Interface Box V2.

CAM-USB is a 15-lead ecg acquisition device with USB interface. It consists of two main components: the CAM-14 acquisition module and the CAM-USB Interface box. Only additional lead wires and electrode grabbers are needed to complete the system hardware for the CAM-USB (see Figure 3-1).

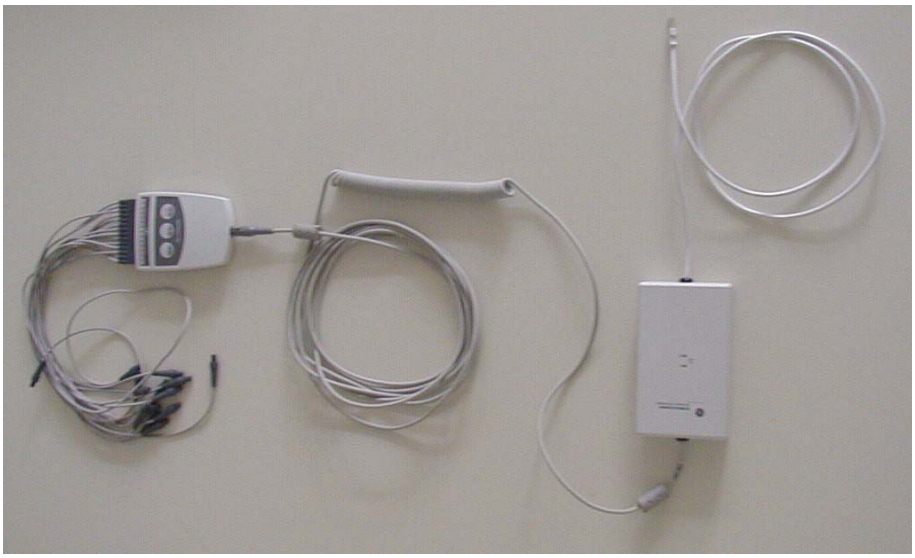

Figure 3-1:

Supported PC and Operating Restrictions

The CAM-USB system can be connected to the USB port of any PC certified in accordance to IEC950, with the following operating restrictions:

- The PC must not be within the patient care area, in accordance with IEC 60601-1-1.
- The CAM-USB system must be connected directly to a PC USB port. Do not use a USB-HUB or cable extension between the PC and the CAM-USB system.
- The CAM-USB Interface Box V2 driver must be installed to connect to a USB 3.0 port. For more information, see “Confirming CAM-USB Hardware Version” on page 5-11.
- The CAM-USB device is powered directly from the USB bus and must receive the full USB single port operating power (+5V DC, 500 mA). Take care when connecting other USB-powered devices to the PC to ensure the CAM-USB system receives full power.

Supported Operating Systems and System Performance

CAM-USB and CardioSoft V6.x work with the following operating systems:

- **Windows XP Professional 32-bit (SP2 or SP3)**
  Minimum PC: P4 class, 1.6 GHz., 512 MB SDRAM., 20 GB HDD
- **Windows 7 Professional 32-bit (SP1)**
  Minimum PC: P4 class, 2GHz., 1 GB SDRAM, 20 GB HDD
- **Windows 7 Professional 64-bit (SP1))**
  Minimum PC: P4 class, 2GHz., 1 GB SDRAM, 20 GB HDD

CAM-14 Acquisition Module

P/N: 901142-005 and 901142-008

NOTE
CAM-14 Acquisition modules are not service parts. They must be purchased through Sales, not Service.

Functions
15-lead acquisition module, already used with CASE8000, CASE, and MAC5000.

Interface
Serial digital communication interface with 1 MHz clock.

CAM-USB Interface

For service orderable part numbers, see Chapter 8, “Spare Parts” .

Functions
The CAM-USB INTERFACE implements the function of the protocol converter between the PC-USB communication port and the patient data acquisition module CAM-14. It is used to isolate the PC system from the patient environment with a 4kV medical floating isolation. It also generates the operating voltage for the CAM-14 module. (see Figure 3-2).

Interfaces

USB Interface:	PC Communications Bus (12 MBits/s full-speed device, bus powered)

CAM-14 Interface: Serial two wire protocol with 1 MHz serial clock.

Figure 3-2:

Indicators

The CAM-USB Interface has two LED's (green and amber) to display the actual CAM-USB interface status. Additionally, there is a buzzer to allow acoustic signalling and the QRS beep (if enabled within the CardioSoft software).

Meaning of the system status LEDs

Green LED	Amber LED	System Status
On	Off	ECG signal transmission in progress
On	On	Ready to send ECG signals (e.g., no communication with CAM-14)
Off	Off	No power
On	Blinking	Communication with CAM-14 interrupted (e.g., CAM-14 not connected)

When a communication problem between the CAM-USB Interface Box and the PC occurs, the box will emit a continuous tone and both LEDs will be illuminated**.**

CAM-USB Interface Defects Handling

The CAM-USB Interface will not be repaired. In the case of defects, the complete box (with mounted cables) will be replaced.

4.3 CAM-USB A/T & CAM-USB A/T KISS

NOTE

Throughout this document, the term “CAM-USB A/T Interface Box” refers to both the CAM-USB A/T Interface Box V1 and the CAM-USB A/T Interface Box V2.

Throughout this document, the term “CAM-USB A/T KISS Interface Box” refers to both the CAM-USB A/T KISS Interface Box V1 and the CAM-USB A/T KISS Interface Box V2.

CAM-USB A/T is a 15-lead ecg acquisition device with USB interface and Analog/Digital Trigger Outputs (A/T) . It consists of three main components: the CAM-14 acquisition module, the CAM-USB A/T Interface box, and an external medical power supply.

CAM-USB A/T KISS is a 15-lead ecg acquisition device with USB interface, Analog/Digital Trigger Outputs (A/T), and an integrated suction pump. It consists of three main components: the CAM-14 acquisition module, the CAM-USB A/T KISS Interface box, and an external power supply.

Only additional lead wires and electrode grabbers are needed to complete the system hardware for the CAM-USB A/T or CAM-USB A/T KISS (see Figure 3-3).

Figure 3-3:

Supported PC and Operating Restrictions

The CAM-USB A/T or CAM-USB A/T KISS system can be connected to the USB port of any PC certified in accordance to IEC950, with the following operating restrictions:

- The PC must not be within the patient care area, in accordance with IEC 60601-1-1.
- The CAM-USB A/T or CAM-USB A/T KISS system must be connected directly to a PC USB port. Do not use a USB-HUB or cable extension between the PC and the CAM-USB system.
- The CAM-USB Interface Box V2 driver must be installed to connect to a USB 3.0 port. For more information, see "Confirming CAM-USB Hardware Version" on page 5-11.
- The medical grade power supply included with the devices must be used to ensure the safety of the patient.

Supported Operating Systems and System Performance

CAM-USB A/T, CAM-USB A/T KISS, and CardioSoft v6.x work with the following operating systems:

- **Windows XP Professional 32-bit (SP2 or SP3)**
  Minimum PC: P4 class, 1.6 GHz, 512 MB SDRAM, 20 GB HDD
- **Windows 7 Professional 32-bit (SP1)**
  Minimum PC: P4 class, 2 GHz, 1 GB SDRAM, 20 GB HDD
- **Windows 7 Professional 64-bit (SP1)**
  Minimum PC: P4 class, 2 GHz, 1 GB SDRAM, 20 GB HDD

CAM-14 Acquisition Module

P/N: 901142-005 and 901142-008

NOTE

CAM-14 Acquisition modules are not service parts. They must be purchased through Sales, not Service.

Functions
15-lead acquisition module

Interface
Serial digital communication interface with 1 MHz clock

CAM-USB A/T Interface and CAM-USB A/T KISS Interface

For service orderable part numbers, see Chapter 8, “Spare Parts” .

Functions
The CAM-USB A/T or CAM-USB A/T KISS Interface serves as protocol converter to connect the CAM-14 acquisition module to the USB port of a standard IEC60950 PC. The device, which is powered by an external IEC60601-1 power supply, contains the USB cable and the CAM-14 cable. Additionally, four analog outputs and one digital output are supported by the device. The CAM-USB A/T KISS variant also includes a suction pump to supply the external KISS multilead electrode suction system. For product safety, there is 1.5kV insulation between the CPU core and the CAM-14 acquisition module and 1.5 kV insulation between the CPU core and the Analog/Trigger outputs.

Interfaces

1. USB Interface: PC Communications Bus (12 MBits/s, full-speed device)

2. Power Input: 12VDC, max. 2A

3. CAM-14 Interface: Serial two wire protocol with 1 MHz serial clock.

4. Analog-/Trigger Outputs:

9-Pin Sub-D connector , Output pin-no. are identical to CASE. All output signals are short circuit protected.

1. *+15VDC@50mAmax*
2. *CH1OUT, Analog Output; Range: -5V…+10V @RL>= 2kOhm*
3. *Digital Trigger Output with TTL-Level @ RL>=2kOhm*
4. *CH2OUT, Analog Output; Range: -5V…+10V @RL>= 2kOhm*
5. *GND*
6. *CH3OUT, Analog Output; Range: -5V…+10V @RL>= 2kOhm*
7. *NC*
8. *CH4OUT, Analog Output; Range: -5V…+10V @RL>= 2kOhm*
9. *NC*

CH GND
(CH = connector housing)

5. Suction System Air Inlet (only in CAM-USB A/T KISS)

Indicators

The CAM-USB A/T Interface and the CAM-USB A/T KISS Interface have two LED's (green and amber) to display the actual interface status. Additionally, there is a buzzer to allow acoustic signaling and the QRS beep (if enabled within the CardioSoft software).

Meaning of the system status LEDs

Green LED	Amber LED	System Status
On	Off	ECG signal transmission in progress
On	On	Ready to send ECG signals (e.g., no communication with CAM-14)
Off	Off	No power
On	Blinking	Communication with CAM-14 interrupted (e.g., CAM-14 not connected)

When a communication problem between the CAM-USB Interface Box and the PC occurs, the box will emit a continuous tone and both LEDs will be illuminated.

CAM-USB A/T Interface and CAM-USB A/T KISS Interface Defects Handling

The CAM-USB A/T Interface and CAM-USB A/T KISS Interface will not be repaired. In the case of defects, the complete box (with mounted cables) will be replaced.

4.4 CORINA

NOTE
The CORINA acquisition module is not for use in the U.S. and Canada.

4.4.1 Context

CORINA is an ECG recorder for CardioSoft. CORINA stands for **COR**D INTEGRATED **A**MPLIFIER and is an interface between patient and personal computer. There are four CORINA models.

4.4.2 Supported Operating Systems and System performance

CORINA and CardioSoft V6.x are working with

Windows XP Professional 32-bit (SP2 or SP3)
Recommended PC: min. 1.6 GHz, min. 512MB SDRAM, min. 20 GB HDD

4.4.3 Model 1 CORINA

Comprises the following components:
Compact plastic casing with interfaces for patient cable and connection cable to PC. All the electronics are integrated inside the casing. This includes ECG preprocessor, controller to buffer data, data converter and transfer to PC. The electronics has its own power supply.

4.4.4 Model 2 CORINA with Suction Pump

Is designed for use with the Electrode Application System. The casing also houses the suction pump with the additional electronics required.

Casing design CORINA models 1 + 2:

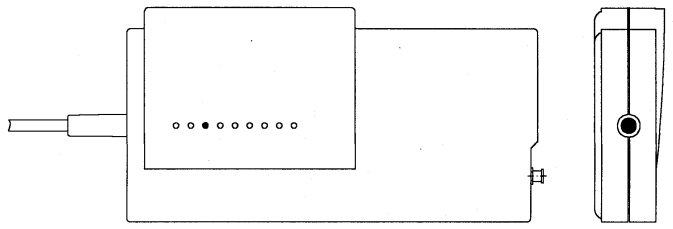

Figure 3-4:

4.4.5 Model 3 CORINA with Analog Output

As Model 1 plus additional analog ECG output. This output enables CORINA & CardioSoft models prior to release 3.0 output of lead II. The output signal of the analog output in the stress test mode is configurable.

4.4.6 Model 4 CORINA with suction pump and Analog Output

Like Model 3 with additional suction pump.

4.4.7 Replacement of CORINA Model 1...4 through newer CORINA Variants (101 118 31...34) with enhanced communication interface to PC

Note: Only CORINA Models 101 118 31...34 and 37/38 (OEM) are supported by CardioSoft V5.x or V6.x.

Note: Redesign of PCBs and PWAs due to EMC 2nd Edition:
- 101 118 31 ... 34: Starting with rev. G. New PWA and PC cable.
- 101 118 37, 38: Starting with rev. H. New PWA and PC cable.

CORINA Block Circuit Diagram

Block circuit diagram of CORINA models 1 + 2, in models 3 + 4 there is an additional functional block (= PCB CORINA TRIGGER) to generate the analog signal)

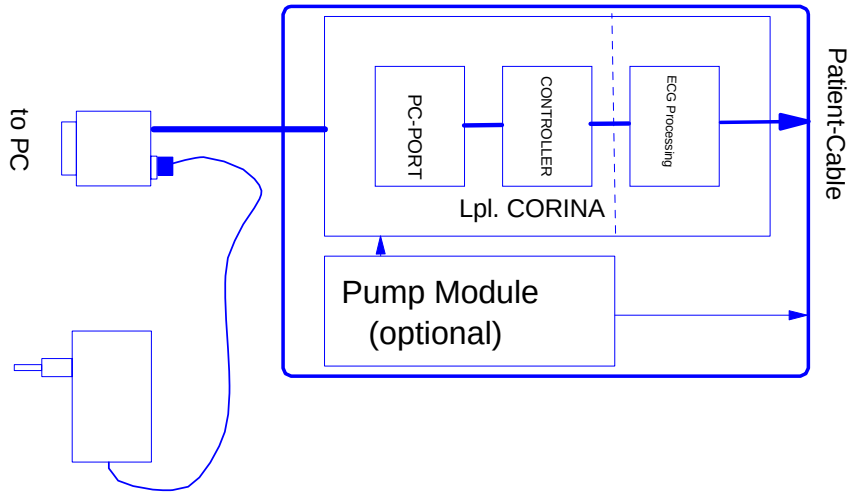

Figure 3-5:

4.5 Introduction

The “Hardware Design Description” describes the structure of the hardware implemented, internal interfaces and those for connection of peripherals.

4.5.1 Repair Procedure

A number is stored in the CORINA which allows the accurate assignment of user and software options.

Repairs conducted by:

– Availability of AT PCBs CORINA (6 types, 3 with and 3 without the possibility of plugging in the PCB CORINA TRIGGER).
  To reprogram the serial number please see chapter 4.5 Reprogramming Serial Number.

This tool enables the authorized service technician to program the replaced CORINA PCB with the customer-specific serial number. The AT PCB is programmed. This number only allows the PCB to be modified by overwriting. Replacement works with the AT PCB only. The AT PCB can be programmed once only.

4.6 Hardware Structure

4.6.1 Mechanical Structure

CORINA comprises 4 (optionally 8) mechanical functional units.

These are:

– casing
– floating screening
– PCB CORINA (5 types: a) 2x standard, b) 2x for Analog Out, c) standalone)
– cable to PC
– pump module for Electrode Application System (optional)
– PCB CORINA TRIGGER (optional)
– insulating foil for PCB Analog Out (optional)
– internal wiring Analog Out (optional)

4.6.1.1 Casing:

The casing comprises the following components.

– lower case shell
– upper case shell
– locking device

The pump module (optional) is affixed to the lower section of the casing. The PCB and the floating screening are attached to the upper section. The locking device is screwed to the PCB and serves to secure the Marquette HELLIGE patient cable.

Upper case shell with integrated PCB:

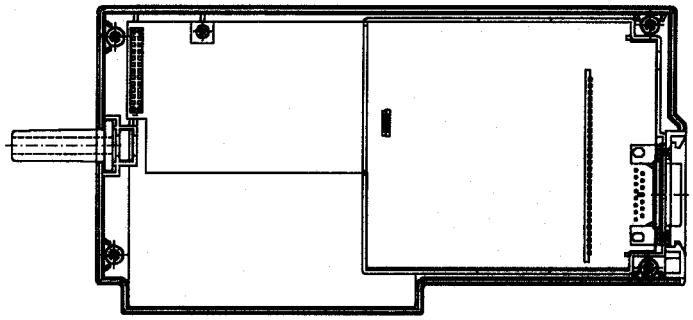

Figure 3-6:

Upper case shell with integrated PCB, incl. PCB CORINA TRIGGER:

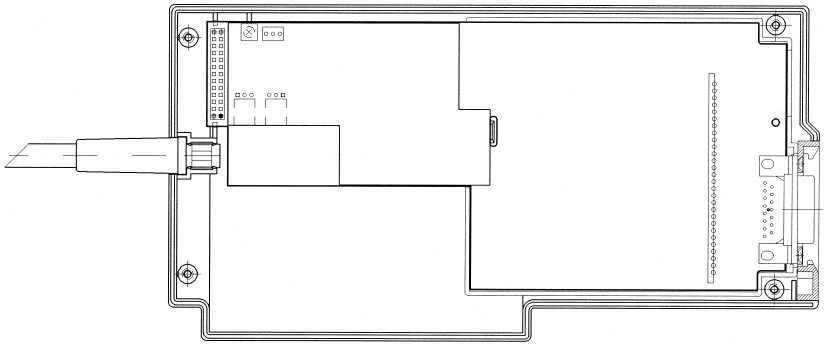

Figure 3-7:

4.6.1.2 Floating screening:

The floating screening comprises a plastic shell with a floating shield cemented in place. The plastic shell is secured with the locking device and by clipping it in onto the PCB. On the one hand, the floating screening protects the highly sensitive electronics from interference while on the other hand, the plastic shell ensures a defined safe gap to the metal plating of the casing.

Lower case shell with integrated pump module (old tubing system):

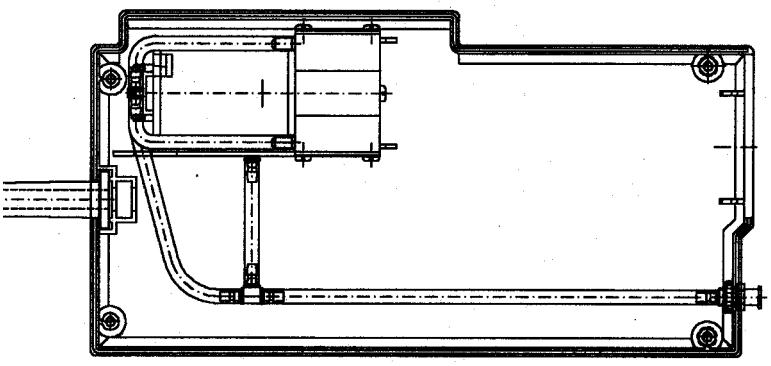

Figure 3-8:

Lower case shell with integrated pump module (new tubing system):

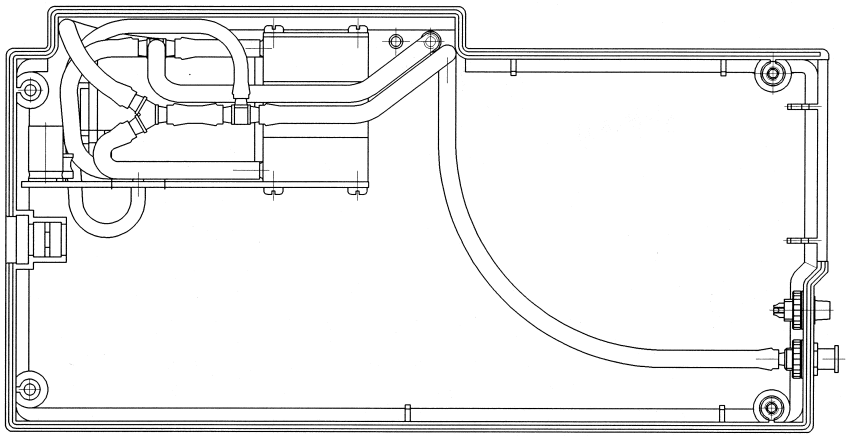

Figure 3-9:

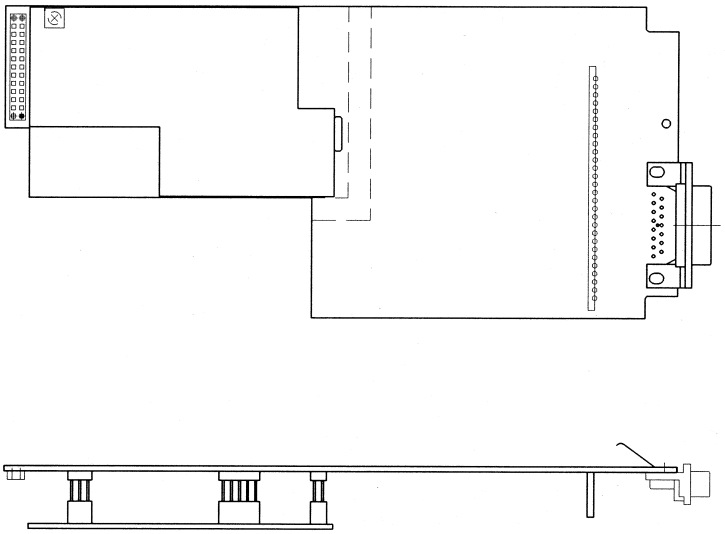

Figure 3-10:

4.6.1.3 PCB CORINA

There are 4 PCB versions:

a) 2x Standard b) 2x for Analog Out

a) 2x Standard PCB:

The entire electronics as well as all interfaces are located on the PCB. The patient input socket is fixed permanently to the PCB. The lead to the PC and the power supply cable to the pump are plugged in. The operational readiness display (LED green) is also located on the PCB. When operative the light is transmitted to the outside of the casing via an optical fiber. The newer PCB version, used in CORINA 101 118 31...32 provides a newer communication protocoll to the PC and will not work inside other (older) CORINA variants.

b) 2x CORINA PCB model for CORINA TRIGGER (Analog Out)

It has longer male multipoint connectors than the standard PCB model. The PCB CORINA TRIGGER is plugged into this and the internal analog lead as well as, optionally, the suction pump connected.

The newer PCB version, used in CORINA 101 118 33, 34 and 101 118 37, 38 provides a newer communication protocoll to the PC and will not work inside other (older) CORINA variants.

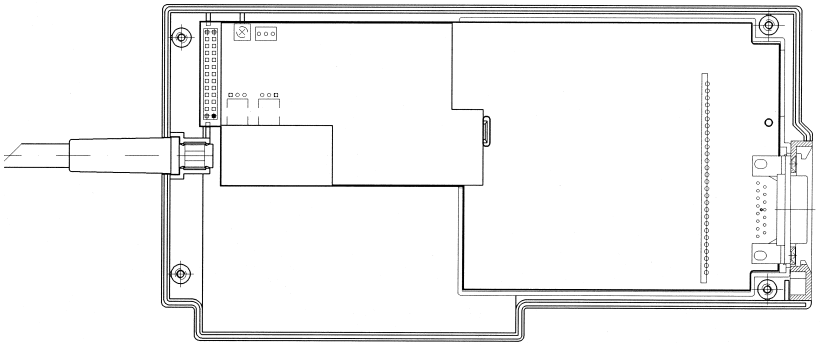

Figure 3-11:

4.6.1.4 Cable to PC

The connection cable to the PC has a 25-pin plug on the PC side. The plug casing also houses a 3-pin socket. A plug-in power supply, supplying CORINA with power, is then connected to this socket. On the CORINA side“ is a 26-pin or 20-pin (EMC redesign) socket terminal strip. This is then plugged directly onto the PCB.

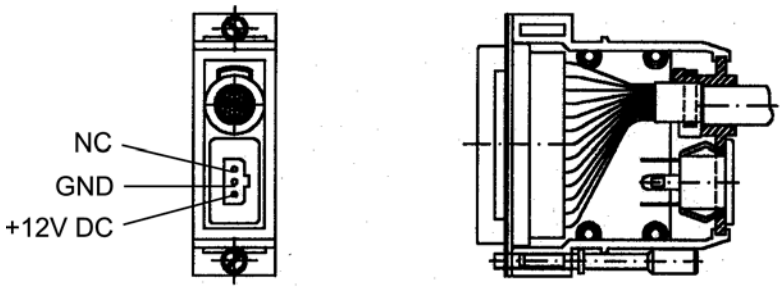

Figure 3-12:

4.6.1.5 Pump Module

The pump module comprises the following components:

– pump
– PCB
– tubing connection

Pump (old tubing system)

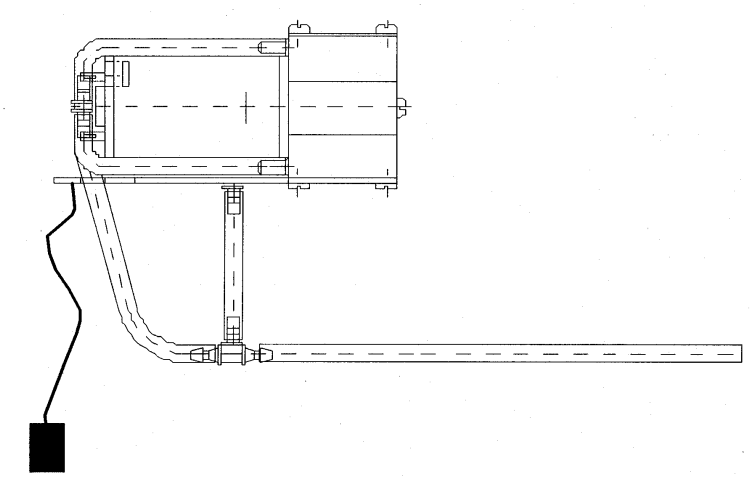

Figure 3-13:

Pump:

When using the PCB Analog Out the power line to the suction pump (optional) is not plugged into the PCB CORINA, but the PCB CORINA TRIGGER.

CAUTION: When used together with the PCB CORINA TRIGGER, the braided pumppower supply wires must be covered by a heat-shrinkable tube!

Pump (new tubing system)

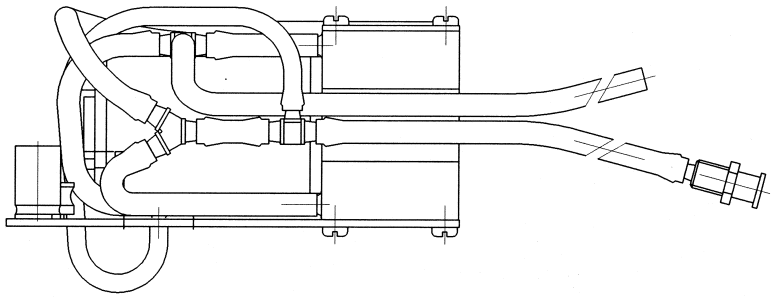

Figure 3-14:

PCB:

The PCB is screwed onto the pump casing. The electronics for pressure regulation is located on the PCB. The 12-V power cable is soldered to the PCB.

Tubing connection:

The air tubing is preassembled and only needs connecting to the nozzle (on the casing).

4.6.1.6 PCB CORINA TRIGGER

There is a floating, analog ECG output based on an optional plug-in card. It provides a 1V/1mV signal (unedited signal, without filter and ADS, pacing pulse is blanked out)at the analog output. The PCB CORINA TRIGGER only needs plugging in. It remains firmly attached without requiring any additional fixation. The standard signal to be output is a lead II signal. For CORINA and CardioSoft Version 3.0 and later versions the output signal can be configured in the stress test mode.

Peripherals can be connected via a 3-pin output socket.
Pin assignment of this socket: Pin 1 = Analog Out, Pin 2 = ground, Pin 3 = reserved (also refer to Section 3.4.2.3)

4.6.1.7 Insulation Foil for PCB CORINA TRIGGER

The insulation foil serves to effect floating isolation of the analog section of the PCB CORINA TRIGGER with reference to the casing and (optionally) to the pump.

4.6.1.8 Internal Wiring of the Analog Output

The connection from the analog output of the PCB CORINA TRIGGER to the 3-pin output socket on the casing is effected using a lead covered by a heat-shrinkable tube. For EMV purposes there are two wide-band interference suppression coils inside this tube. Using this tube effects high-voltage-resistant isolation between the analog output signal and ground and patient floating part.

4.6.2 Electrical and electronic structure

The entire CORINA electronics is divided up into three functional units and located on a PCB. These are ECG CONDITIONING, CONTROLLER and PC PORT. (In addition, optionally, Analog Out electronics on the plug-in PCB CORINA TRIGGER).

4.6.2.1 ECG Processing

- acquisition and analog-digital conversion of the ECG signals via up to 11 electrodes
- preprocessing and intermediate storage of the data
- data transfer via a serial interface
- additional functions are: pace identification, checking and testing functions, configuration of the inputs, N negative-feedback loop, measurement of d.c.

voltage and blocking function

Transfer of data between the functional unit ECG Processor and CONTROLLER is via a QSPI interface. The exact specifications are described in the document [ASIC Interface].

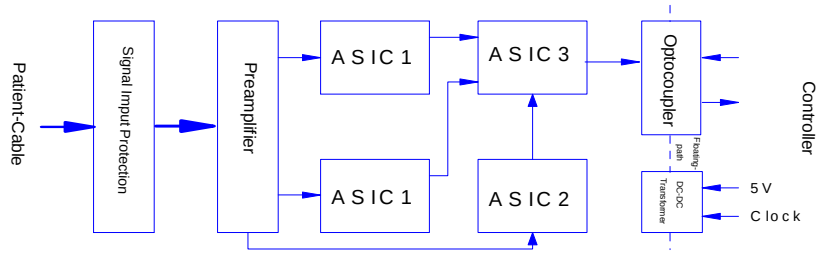

Figure 3-15:

4.6.2.2 CONTROLLER

- all CORINA control functions
- initialization of hardware
- data communication from and to the functional unit ECG Processor
- data communication from and to the functional unit PC PORT
- output of ECG data to DA transductor on PCB CORINA TRIGGER (optional)

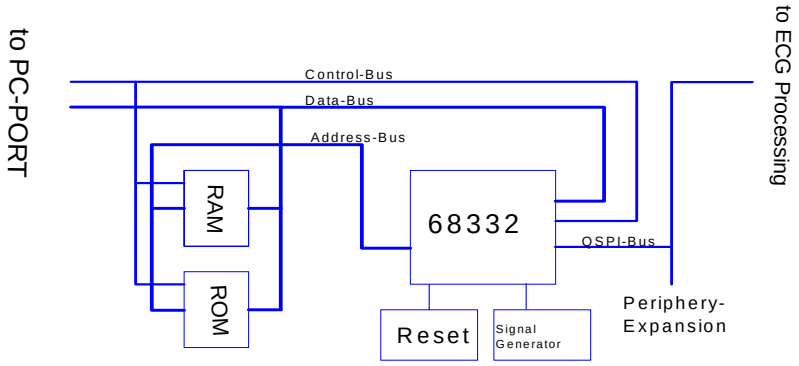

Figure 3-16:

CORINA is controlled by the Controller 68332. This controller already has all the important functions required to control CORINA.

These are:

- **CPU** (68000 family plus 68020 commands plus commands for controller applications)
- **2 serial interfaces** (SCI, QSPI)

- **on-chip memory** (for faster applications)
- **maximum of 12 programmable chip selects**
- **interrupt manager**
- **intelligent 16-bit timer**
- **clock generator**

Memory:

A 128 kByte FLASH (128 K x 8 PEROM), which can be programmed directly with the 5-V operating voltage supply, is used as a program memory store. This permits the subsequent loading of software updates using the PC. The data memory comprises the ON-The interrupt requests IEKG_and IPCPW_ are both stored by using FLIPFLOPS, since the interrupt inputs IRQ1 to IRQ6 are only level gated. In contrast to the others, IRQ7 is edge gated and can thus be actuated directly.
Resets are generated by a MICROPROCESSOR SUPERVISORY CIRCUIT.
A floating section is used to connect the functional unit ECG Processor to the QSPI interface of the 68332. This is a full duplex interface with data input MISO (Master-In Slave-Out), data output MOSI (Master-Out Slave-In) and serial clock SCK. A maximum of 4 devices can be connected to this interface. To achieve this, the PCB is equipped with a connector onto which this bus can be switched in. Using this connector thus allows the connection of a maximum of 3 further peripherals (e.g., experimental input). One of the peripherals is the PCB CORINA TRIGGER (optional).

A signal transmitter gives an acoustic status message. This signal transmitter enables signalling of errors, for example.

4.6.2.3 PC PORT

- CORINA power supply
- ESD protection
- data communication to and from PC

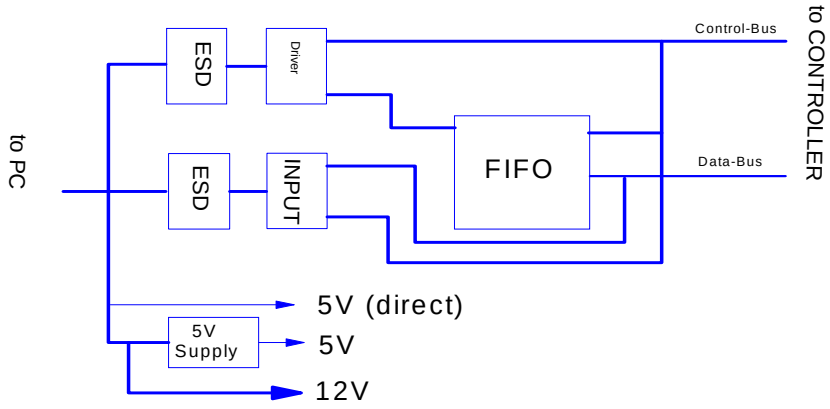

Figure 3-17:

All cables leading to and from the PC are provided with ESD protection.
A DC/DC transducer is used to generate the 5 V. This transducer generates the 5-V power voltage from the 12 V received from the plug-in power supply. The DC/DC transducer can be switched on and off by the PC via the control cable. There is a

connector on the PC to connect the 12 V. The pump module can then be connected to this connector.
Data communication between PC and CORINA is via a FIFO. This enables the PC to pick up ECG data at any time. The FIFO has a memory depth of 8 K / 32K X 9 bits, 7/4 bits being used (of these, 6/3 bits for ECG data and 1 bit for synchronization).

All output leads are led through a driver chip.

4.6.2.4 Optional Analog Out Electronics

The PCB CORINA TRIGGER provides the user with a floating analog ECG output signal for connection to ultrasound units. Pacing pulses are blanked out.

Funtionality:

Using QSPI (serial data transfer) the ECG data are transmitted via a medically floating segment to a D/A transducer (10 bits) located on the PCB CORINA TRIGGER. The analog output signal is subsequently standardized, amplified and made available to the user. The signal is short-circuit-proof, unfiltered and does not have ADS bedside processing.

CAUTION: To enable QRS complex triggering when using PACE, the pacing pulses are removed from the ECG signal.

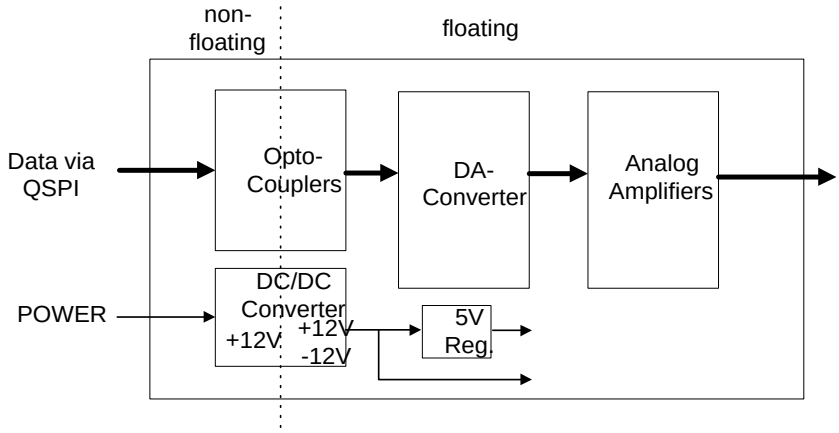

Figure 3-18:

CAUTION: When connecting up an ultrasound unit it is important to ensure that the instrument connected has an input LPF of < 400 Hz. If this is not the case, an external (passive) low pass should connected to the input of the peripheral.

Suitable low-pass configuration:

Revision A

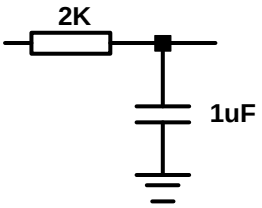

Figure 3-19:

4.6.3 Internal Interfaces

4.6.3.1 Mechanical Interfaces

Tubing connection of the pump module:

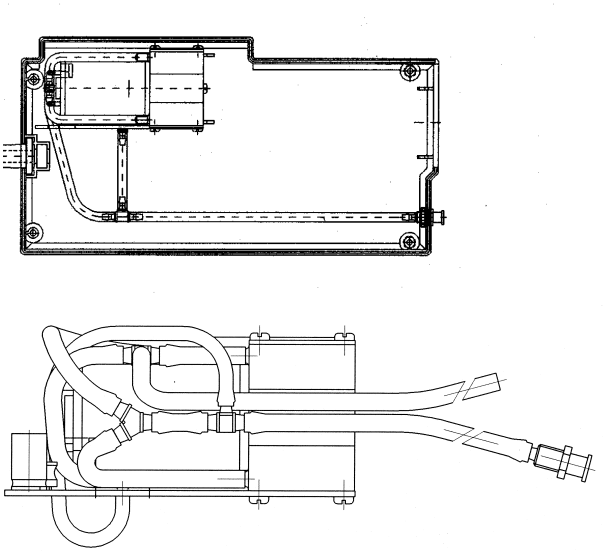

Figure 3-20:

The pump module air tubing is preassembled and only needs connecting to the nozzle (on the casing).

4.6.3.2 Electrical Interfaces

CORINA has three internal interfaces. These are:

– interface to pump module
– debugging interface
– interface for further peripherals (PCB Analog Out):

Interface to pump module:

Description of interface:

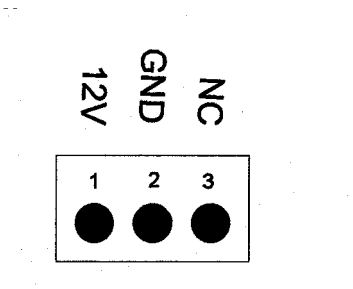

Figure 3-21:

The pump module interface is in the form of a 3-pin male multipoint connector. The pump module requires only a 12-V power supply.

4.6.4 Interfaces to Peripherals

4.6.4.1 Mechanical Interfaces

CORINA has three mechanical interfaces. These are:

- power cable to PC
- connection socket for patient cable
- nozzle for air tubing
- optional: Analog Out connector

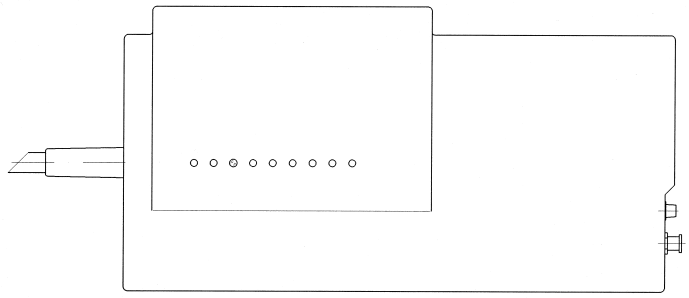

Figure 3-22:

4.6.4.2 Electrical Interfaces

CORINA has two external interfaces. These are:

- interface to PC
- ECG input
- optional: Analog Out

4.6.4.2.1 Interface to PC:

Data interface:

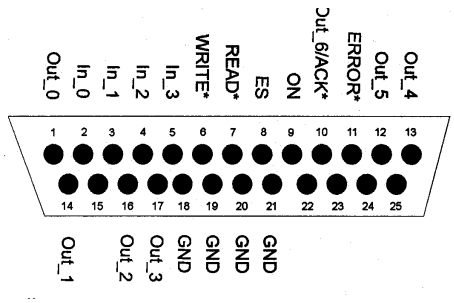

Figure 3-23:

Description of interface:

OUT(0-5)	data to PC
OUT6/ACK	data bit to PC and data acceptance confirmation this interface lead fulfils two functions READ MODE -> data line D6 (data from CORINA -> PC) WRITE MODE -> ACK* (data from PC -> CORINA)

For outputs OUT(0), OUT(1) and OUT(3) it is important to observe that these are output inverted by CORINA since, initially, the PC inverts these inputs.
In newer CORINA versions (101 118 31...38) a new cable to PC is used, where only OUT (2, 4, 5) are used to transmit data to the PC.

ERROR*	indicates “full or empty FIFO”
IN(0-3)	data from PC
ES	selection whether ERROR* should indicate “full or empty FIFO“ ES = LOW -> CORINA indicates “empt“ FIFO ES = HIGH -> CORINA indicates “full“ FIFO
READ*	transmit data to PC
WRITE*	read data from PC
ON	switch on CORINA ON = LOW -> CORINA is switched off ON = HIGH -> CORINA is switched on

Power source interface:

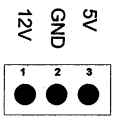

Figure 3-24:

As of 05/1997 this interface no longer delivers a 5-V signal.

4.6.4.2.2 ECG Input:

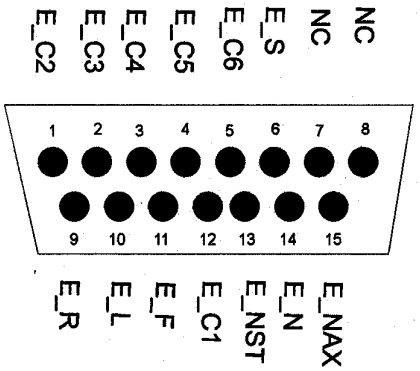

Figure 3-25:

Description of interface:

E_R	electrode input right arm
E_L	electrode input left arm
E_F	electrode input left foot
E_N	electrode input right foot
E_C1	electrode input chest electrode C1 (Wilson)
E_C2	electrode input chest electrode C2 (Wilson)
E_C3	electrode input chest electrode C3 (Wilson)
E_C4	electrode input chest electrode C4 (Wilson)
E_C5	electrode input chest electrode C5 (Wilson)
E_C6	electrode input chest electrode C6 (Wilson)
E_NAX	electrode input chest electrode NAX (Nehb)
E_NST	electrode input chest electrode NST (Nehb)
E_S	shielding

4.6.4.2.3 Analog Out

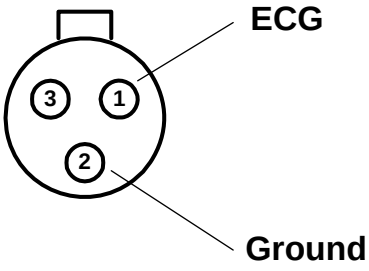

Figure 3-26:

Pin assignment of this socket: Pin 1 = Analog Out, Pin 2 = ground, Pin 3 = reserved.

4.7 Troubleshooting Help Functions

After startup, CORINA performs an internal self-test. The test results are filed in FIFO memory. If an error is detected, an alarm signal also sounds three times in succession.

Meaning of the error messages:

Self-Test Results (BYTE)	Program Display Value	Meaning
00000000	0	no error
00000001	1	error in internal RAM of 68332
00000010	2	error in vector list
00000100	4	error in RAM memory
00001000	8	system software CRC check error
00010000	10	custom software CRC check error
00100000	20	QSPI check error

When several errors occur together, the relevant bit in each case is set.

Example:

System and custom software CRC check error.

Self-Test Results (BYTE)	Program Display Value	Meaning
00011000	24	System and custom software CRC check error

5 Troubleshooting Tips

5.1 Frequently Asked Questions

Question: Why is the N-electrode always indicated as OK (green)?

Answer: The acquired signal is used for lead detection. Unlike all other electrodes, the N-electrode is not an input electrode, so no signal is acquired and the electrode is always indicated as OK. The N-electrode is an output electrode to remove artifacts.

Symptom: The error message "Acquisition module not connected" occurs repeatedly with the CAM-USB Interface.

Solution: Disable power save mode for laptops. The process varies by operating system.

Windows XP

Windows XP has no icon of the flag in the taskbar. A vendor-specific applet must be installed:

1. Turn off *SpeedStep* in the BIOS and Windows XP.

   To disable *SpeedStep*, go to the power applet in the control panel and select the "*Always on*" option.

2. If the attempt fails, contact your laptop vendor to get the applet for disabling Intel SpeedStep Technology or AMD power non.

Setting Power Scheme to Always On:

1. Select **Start > (Settings) > Control Panel** to open the *Control Panel*.
2. In the *Control Panel*, click **Power Options**.
3. On the *Power Schemes* tab, choose **Always On**.
4. Choose **Never** for *Turn off monitor/Turn off hard disks/System standby*.

Checking minimum requirements

1. Select **Start > (Settings) > Control Panel** > **System**.
2. On the *System Properties* window, review the information on the *General* tab.
3. Verify the Service Pack 2 or Service Pack 3 is installed and that the system has at least 512 MB of RAM.

Windows 7

1. Select **Start** > **Control Panel** > **Power Options.**
2. Select the **High Performance** power plan.
3. Click the **Change Plan Setings** link for the **High Performance** option.
4. Click the **Change advanced power settings** link.
5. Select the **Sleep** setting.
6. Set **Allow hybrid sleep** to **OFF**.

   Optionally, you can also change the power settings for **Hard disk** and **Display**.

Symptom: The following error messages occur with the CAM-USB interface:

[7983]	Exercise test option not found.
[6400]	Note: The “Record” function is available only in conjunction with the “Resting ECG, Standard” option!
General:	Option not found

Solution:

1. Look for the serial number (**System Configuration** > **Option Code**).
2. If the serial number is “0”, close CardioSoft, disconnect the CAM-USB, wait 5 seconds, reconnect the USB connector, and restart CardioSoft.

   NOTE

   The CAM-USB interface must be plugged in before starting CardioSoft.
3. Look for the serial number again.

Symptom: Waveforms are not acquired with the CAM-USB Interface.

Solution: Disconnect the USB connector and wait a minimum of 5 seconds before reconnecting.

Symptom: Patient module is not detected at the LPT port.

Solution:

1. Set the LPT Mode in BIOS to “NORMAL” (not “ECP” or “EPP”).
2. If this does not help, use the Multi I/O card (PN: 2000148-001) from GEMS IT Service.

The new generation Patient Module (v3.1) has better communication capabilities. Because of these enhanced communication features, it works only with CardioSoft v4.14 or later.

Patient Module V3.0 and earlier work only with PCI card VSCOM210.

Patient Module V3.1 and later work with all XT-compatible or 16550-compatible PCI cards.

Symptom: I received error message -115 when installing CardioSoft.

Solution: Either the file identified by the error message is write protected or the actual user does not have the rights to write to the destination directory. Change the read-only attribute for the file or modify the user's permissions to allow write access.

Symptom: When I open an examination, I get a decompression error.

Solution: Use the SCANDISK or CHKDSK commands to check and repair the hard drive. If that does not resolve the problem, run the database repair tool. If the problem still persists, restore the most current backup.

Symptom: **The Patient Selection menu will not fit within the screen.**

Solution: To resolve this problem, the ***Display Configuration*** option (DSPC) must be installed.

1. Select ***System Configuration*** > ***General*** > ***Exercise Test*** > *Screen* > ***Configure Vital Signs***.
2. Right-click on the desired field and select a smaller font.
3. Repeat for any field that does not fit.
4. When you are done, click OK to save your changes.
5. Save the configuration for future use with the Custom Setup feature.

Symptom: **The Heart Rate is removed after it is transferred from a MAC 1200 device to the CardioSoft system.**

Solution: The heart rate is calculated from the RR duration. To get the heart rate in CardioSoft, you must have the *Measurement Software* option enabled on the MAC 1200 device; the RR duration and heart rate can be calculated.

Symptom: **There are small differences in the measurement values after they are transferred from the MAC 1200 device to the CardioSoft system.**

Solution: The protocol used to transfer the data does not use the same amplitude unit for the measurement values as the MAC 1200 device. These values must be converted when the data is received in CardioSoft, and the results may not be identical.

Question: **How does one integrate the CardioSoft system into the customer's archiving system?**

Answer: Integrating with the customer's archiving system requires the Report Export as PDF option (EPDF). The generated PDF files can be sent to the customer's archiving system, and the archiving system can view the files with the PDF reader. The PDF files can also be printed in high quality on a laser printer. PDF files provide better quality than exporting screen captures as JPG files.

Symptom: **Occassionally, the program does not calculate target load.**

Solution: To calculate target load, the program needs to know the patient's gender, date of birth, height, and weight.

The program cannot calculate target load in any of the following conditions:

- Age < 15 years *or* > 84 years
- Height < 50 cm *or* > 250 cm
- Weight < 20 kg *or* > 200 kg
- Body surface area (*men*) < 1.6 m^2
- Body surface (*women*) < 1.2 m^2

Symptom: **If a PDF report with ECG grid is generated with Adobe Acrobat in CardioSoft, the figure 2 is displayed instead of the ECG grid.**

Solution:

1. Select **Start** > **Printers and Faxes**.
2. Double-click on *Acrobat Distiller* and select **Printer** > **Document Defaults...**.
3. On the *Adobe PDF Settings* tab, clear the *Do not send fonts to Distiller* field.
4. On the *Advanced* tab, set True Type fonts to *Download as Softfont*.

If these steps do not resolve the problem, change the grid style in *System Configuration/Printer* by deselecting the *Dotted lines* check box. The grid will now use solid lines and the grid color can be individually adjusted.

Symptom: **The MUSE Web Server works, but an error message is displayed when the CardioSoft patient list is invoked.**

Solution: A MUSE Web user account must be created under Windows and assigned to the MUSE group. The user account must also be created in MUSE.

Question: **Why do metabolic carts display a higher heart rate than CardioSoft?**

Answer: During exercise tests, the heart rate is calculated for the 30-second tabular data. The heart rate is averaged over 30 seconds at 5-second intervals and entered in the table. The maximum heart rate is derived from the tabular data. The heart rate is sent to the metabolic cart at 5-second intervals, so the value displayed there may be higher than in CardioSoft.

Question: **How do we run CardioSoft Web on Windows Domain Controller?**

Answer: For CardioSoft Web to run on Windows domain controllers, the following users must be assigned to the *Server Operators* group after installation: *IUSR_<ComputerName>* and *IWAM_<ComputerName>*.

1. Select **Start** > **Control Panel** > **Administrative Tools** > **Active Directory Users and Computers**.
2. In the left panel, expand the desired location and select the *Builtin* folder.
3. In the right panel, right-click on *Server Operators* and select *Properties*.
4. Select the *Members* tab and add the users *IUSR_<ComputerName>* and *IWAM_<ComputerName>*.

Question: What is the meaning of the spirometry test parameters (LF501)?

Answer: Designation of Spirometry Test Parameters CardioSoft ≥ V5.x of LF501

Parameter Designation		
IVC [liters]	Inspiratory vital capacity (relaxed)	Inspiratorische Vitalkapazität
EVC [liters]	Expiratory vital capacity (relaxed)	Exspiratorische Vitalkapazität
FEVC [liters]	Forced expiratory vital capacity	Forcierte Exspiratorische Vitalkapazität
FEV1 [liters]	Volume of air exhaled during the 1st second of FEVC	Forciertes exspiratorisches Volumen in 1 Sekunde
PEF [liters/second]	Peak expiratory flow	Max. exspiratorischer Flow
MEF75 [liters/second]	Max. expired flow at 75% FEVC remaining	Forcierter max. exspiratorischer Flow bei 75% Restvolumen FEVC
MEF50 [liters/second]	Max. expired flow at 50% FEVC remaining	Forcierter max. exspiratorischer Flow bei 50% Restvolumen FEVC
MEF25 [liters/second]	Max. expired flow at 25% FEVC remaining	Forcierter max. exspiratorischer Flow bei 25% Restvolumen FEVC
MMF [liters/second]	Max. mid-expiratory flow (forced) between 25 and 75% of FEVC	Mittlerer Flow bei 25-75% FEVC
FIVC [liters]	Forced inspiratory vital capacity	Forcierte inspiratorische Vitalkapazität
FIV1 [liters]	Volume of air inhaled during the 1st second of FIVC	Forciertes inspiratorisches Volumen nach 1 s
PIF [liters/second]	Peak inspiratory flow	Max. inspiratorischer Flow

Parameter Designation		
MIF75 [liters/second]	Max. inspired flow at 75% of inhaled FIVC	Forcierter max. inspirator. Flow bei 75% der inhalierten FIVC
MIF50 [liters/second]	Max. inspired flow at 50% of inhaled FIVC	Forcierter max. inspirator. Flow bei 50% der inhalierten FIVC
MIF25 [liters/second]	Max. inspired flow at 25% of inhaled FIVC	Forcierter max. inspirator. Flow bei 25% der inhalierten FIVC
MVV [liters/second]	Maximal voluntary ventilation of air expired for one minute (indirect, derived from FEV1)	Maximales exspiratorisches Ventilations-Volumen pro Minute (indirekt, abgeleitet von FEV1)

For more information, see the operator manual.

Question: **What are the rules for the MILLER spirometry interpretation (LF501)?**

Answer:

1. FEV1/IVC ≥ 70% and IVCref/IVC ≥ 70%
   > No Respiratory Problem
2. FEV1/IVC < 70% and IVCref/IVC < 70%
   > Combined Respiratory Problem
3. FEV1/IVC < 70% and IVCref/IVC ≥ 70%
   > Obstruction
4. FEV1/IVC ≥ 70% and IVCref/IVC < 70%
   > Restriction

Symptom: **InSite ExC has no remote access to the server.**

Solution: Determine whether the remote servicing software *PC Anywhere* is installed on your computer. If it is, remove it.

5.2 Printer Debugging

Symptom: **The printout is incomplete.**

Solution: The printer probably has insufficient memory. Increase the memory in the printer or select another printer with more memory.

Symptom: The laser printer prints numbers instead of a grid.

Solution: There are four solutions for this issue:

- If you work within a network environment, verify that CardioSoft is installed on every client.
- On each client, open the the printer's properties window and verify that *Print directly to the printer* is set.
- Add the entry *GRA_DontRemoveGrid=1* to the [CARDIO] section of *LOC_WIN.INI*.
- Select **Start** > **Control Panel** > **Regional Options** > **General** > Lang**uage settings for the system**, and deactivate support for the following languages: Arabic, Hebrew, Indic, Korean, Thai, and Vietnamese. Reboot the computer after changing these settings.

Symptom: The "paper out" message is delayed when printing to laser printers.

Solution: Reduce the *Transmission Retry Timeout* to decrease the delay of the displayed "paper out" message. Note that this could also cause a timeout message when printing pages with noisy ECG waveforms.

To reduce the *Transmission Retry Timeout* in Windows, do the following:

1. On the client receiving the delay, open the printer's *Properties* window.
2. On the *Port* tab, select the port to which the printer is connected and click the **Configure Port...** button.
3. On the *Configure Port* window, enter the number of seconds in the *Transmission Retry* field and click **OK**.

5.3 General Troubleshooting

Symptom: After "Export to Microsoft Word", the exported RTF file is always displayed with Microsoft Word. This may be very annoying when a series of tests is selected for export.

Solution: In the *[Cardio]* section of *LOC_WIN.INI*, add the entry ***CFR_SilentWordExport=1***.

Symptom: The stress test driver settings are lost after they were changed or created.

Solution: The file *ERG_PROT_V5AN.DAT* in the program directory may have become corrupted. Delete the file and reboot the PC; the file will automatically be regenerated.

Symptom: **The database contains defective data sets. Errors occur during patient selection, but not when selecting examination options.**

Solution: Contact technical support for a reorganisation tool, which may repair the error in the data base.

By activating the REORG procedure, you can reorganize defective BTRIEVE files from CardioSoft. This repair procedure may become necessary when the data become damaged for some reason or another (after a power failure, for example). To carry out the repair procedure successfully, CardioSoft must be terminated and there must be sufficent memory space on your hard disk.

As a general rule, the following applies:

memory space required	=	twice the sum of all CardioSoft files with the suffix “BTR”

The original CardioSoft files are still available in the form of “OLD” files after reorganization and should only be deleted when the reorganization has been completed successfully.

Symptom: **There are problems with my printer, since I connnected patient module to the system**

Solution: CardioSoft normally checks all LPT ports to detect the patient module acquisition box. If the connected printer has problems with this access and you have CardioSoft V4.14 or greater, do the following to correct this problem:

Add the following entry to the *[CARDIO]* section of *LOC_WIN.INI*:

`WCO_CorinaLptPort=x`

Replace **`x`** with the number of the LPT port to which the patient module is connected. If you define the Port number 0, detection for the patient module will be disabled. This may be neccesary on View and Edit stations, if there are problems with the printer after starting CardioSoft.

Symptom: **Error when reading examinations, or examinations get lost.**

Solution: Three causes can lead to data loss: hard drive failure, a virus on the hard drive, or issues with the CardioSoft database. If the hard drive is found to be functional and virus-free, running the database repair tool may correct the issue.

Symptom: **Patient locked although only called up on one workstation.**

Solution: When a patient record on the network is locked even though it is being called up on only one workstation, it indicates that another workstation was viewing the record when either CardioSoft crashed or the PC was shut down without first terminating CardioSoft. To correct this problem, do the following:

1. Ensure that CardioSoft is not running on any workstation.
2. Delete the file *network.btr* in the *\database* subdirectory of the CardioSoft directory.

Symptom: **Cannot monitor a stress test on two workstations at the same time.**

Solution: There is no solution to this issue. A stress test currently being performed can be monitored from only one workstation at any a time.

Symptom: **When transferring examinations to another data medium, the examinations cannot be retrieved if the subdirectory has an umlaut (ä,ö,ü) in its name.**

Solution: Create subdirectories without umlauts.

It is not possible to transfer more than 512 examinations into the root directory of a data medium as DOS is only able to manage a maximum of 512 files on this medium. If more examinations are to be transferred, a subdirectory must be created. The number of files there is practically unlimited.

Symptom: **Blood pressure display is cut off.**

Solution: In the operating modes *late potentials* and *ergometry*, the blood pressure display can be cut off, especially when the diastolic value is a 3-figure number. This problem occurs only in the case of VGA monitors larger than 17" set to a 800 x 600 resolution.

To resolve this issue, select a higher resolution (1024 x 768 or 1280 x 1024).

Symptom: **No RAS connection with ELSA modem.**

Solution: The ELSA 33.6 TQV modem does not support pulse dialing. Select *Tone Dialing*.

Symptom: **Modem RAS connection is not started.**

Solution: To have CardioSoft automatically open the RAS modem connection when transferring data to the MUSE system, set the *Start Modem connection before transfer* field in the MUSE settings of the CardioSoft System Configuration. If you manually opened the connection, terminate the manual connection.

Symptom: When compressing an examination on a hard disk >4.3GB, the following message is displayed when less than 15% of the storage space is free: Not enough memory space.

Solution: This error indicates that you do not have enough free space on your hard drive. As a temporary fix, do the following:

1. In CardioSoft, select ***System Configuration*** > ***General***.
2. Click the ***Database*** button.
3. On the ***Database Setup*** dialog box, change the specified percentage of storage space from ***15*** (the default) to ***1***.
4. Click ***OK***.

NOTE

This only prevents the error message from being displayed. It does not increase storage space. Steps must still be taken to provide additional hard drive space, either by removing unnecessary files from the hard drive or replacing the hard drive.

Symptom: Cannot start CARDIO.exe a second time within a short period of time.

Solution: This problem may occur when more than one CardioSoft client is active in a network environment. After the CardioSoft application is closed, the application window closes immediately, but the *cardio.exe* process may still run for an additional 20 to 30 seconds. During this time, *cardio.exe* may not be started again.

To resolve this issue, you must modify your system registry.

NOTE

Bback up the system registry before modfying it. Refer to Windows documentation for more information on backing up and modifying the registery.

1. From the Windows desktop, run ***REGEDIT*** to open the system registry.
2. Locate the following entry:

   HKEY_LOCAL_MACHINE\Software\Btrieve Technologies\Microkernel Workstation Engine\Version 6.15\Settings

3. Add the following entry:

   Delete TMP Files = 0

Symptom: The application locks up while printing a Post Test Report on the thermal printer.

Solution: Select **Start** > **Settings** > **Control Panel** > **Printers** and delete the print jobs from the Marquette Thermal printer.

5.4 System Diagnosis on Windows XP/Windows 7

The following sections explain how to review the Windows event log to troubleshoot operating system issues and how to back up the CASE/CS event log and system information to troubleshoot application issues.

5.4.1 Browsing the Windows Event Log

To troubleshoot and diagnose operating system issues, a local administrator can use the *Event Viewer* or *Windows Diagnostics* by selecting **Start** > ***Control Panel*** > **Administrative Tools**.

5.4.2 Backing up the CASE/CS Event Log and System Information

The *CreateSystemInfoZipFile.bat* file collects and saves the CASE/CS event logs, system settings, and configuration files in a single compressed ZIP file. The ZIP file is stored in the *C:\Cadio\Log* and uses the following naming scheme: *<computername>_<date>_<time>.zip*.

The *CreateSystemInfoZipFile.bat* file is compatible with versions 6.51, 6.61, and 6.7x of CASE, CS, and CardioSoft. It can be found in either of the following locations:

- Cardiosoft/CS program folder or application data folder (typically *C:\Cardio\Support*)
- CardioSoft/CS V6.7 application CD-ROM in the *Support\System Information* directory

To run the *CreateSystemInfoZipFile.bat* file:

1. Log in as local administrator.
2. Double-click the file *CreateSystemInfoZipFile.bat* in one of the locations specified above.

   The process collects the support data and creates the specified zip file in the specified location.

5.5 Confirming CAM-USB Hardware Version

Use the following procedure to confirm the hardware version of the CAM-USB acquisition device connected to the CardioSoft system.

1. Start the CardioSoft application.
2. Select *System Configuration > Devices for Service Only*.
3. When prompted for the service password, type **HELSERV** and press **Enter**.
4. Select the *Set CAM-USB/.CORINA Serial Number* tab.

   The *Service Tool for Corina and CAM-USB and CAM-USB A/T* window opens.

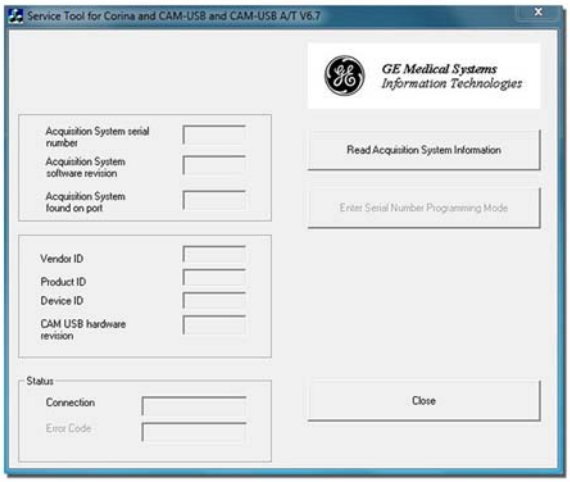

Figure 4-1:*Service Tool for Corina and CAM-USB and CAM-USB A/T* window

5. Click the *Read Acquisition System Information* button.

   The service tool collects the information from the connected CAM-USB box and displays it.

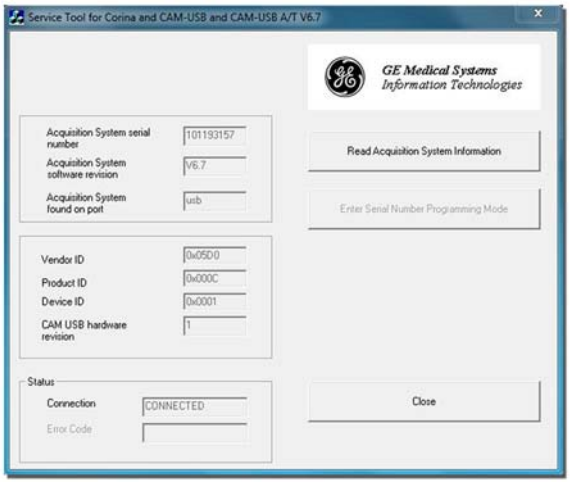

Figure 4-2:Acquisition System Information Results

6. Verify the hardware revision:

   The revision displayed differs depending on the device and version connected:

Device	Version	Hardware Revision
CAM-USB	V1	0
	V2	1
CAM-USB A/T	V1	4
	V2	5

Device	Version	Hardware Revision
CAM-USB A/T KISS	V1	4
	V2	5

NOTE

The *Read Acquisition System Information* button will return no values for either of the following reasons:

- The CAM-USB device is not connected to the CardioSoft system.

  Resolution: Enure the CAM-USB device is firmly connected to the CardioSoft system and repeat this procedure.

- A CAM-USB V2, CAM-USB A/T V2, or CAM-USB A/T KISS V2 is connected but the V2 drivers have not been installed on the CardioSoft system.

  Resolution: Install the CAM-USB V2 driver set and then repeat this procedure. Use the CAM-USB V2 Driver Set 1.0 CD (2071307-001) and *CAM-USB V2 Driver Set Installation Manual* (2074632-001), which were included with your CAM-USB V2, CAM-USB A/T V2, or CAM-USB A/T KISS V2 device.

5.6 Wireless LAN

Symptom: I receive a BTRV error when launching Cardiosoft.

Solution: This error will occur if the network drive is disconnected when *cardio.exe* is started, leaving CardioSoft with no access to the database. This condition may be caused if WLAN is still in the initialization phase when the network drive is being mapped.

To resolve this issue, open Windows Explorer, navigate to the mapped network drive, and click on it. Windows will remap the drive.

Symptom: Starting CardioSoft and loading or saving examinations takes too much time over a wireless network.

Solution: Disable *Power Save Mode* for *LAN*, *Wireless LAN*, and *USB Controller*:

1. Select **Start** > **(Settings)** > **Control Panel**.
2. In the *Control Panel*, click **System**.
3. On the *System Properties* window, select the *Hardware* tab and click the **Device Manager** button.
4. In the *Device Manager* window, expand *Network adapters*.
5. Double-click *LAN Controller*.
6. If the *Power Management* tab is available, click on it and verify the following options are not selected:
   - *Allow the computer to turn off this device to save power*
   - *Allow this device to bring the computer out of standby*

7. Click **OK** to save your settings and close the *LAN Controller* window.
8. In the *Device Manager* window, double-click *Wireless WLAN Card*.
9. On the *Advanced* tab of the *Property* window, set *Disable Power Save Mode*.
10. Click **OK** to save your settings and close the *Wireless WLAN Card* window.
11. In the *Device Manager* window, expand *Universal Serial Bus Controllers*.
12. Double-click every *USB Root Hub*.
13. If the *Power Management* tab is available, click on it and verify the following options are not selected:
    - *Allow the computer to turn off this device to save power*
    - *Allow this device to bring the computer out of standby*
14. Click **OK** to save your settings and close the *USB Root Hub* windows.
15. Reboot the PC.

5.7 Remote Servicing

Refer to the *CardioSoft Software Installation and Upgrade Guide*.

6 Care and Maintenance

6.1 General Introduction

This test is designed to verify that the equipment and its electrical connections comply with domestic standards and are safe to use. For international electrical safety tests, refer to the internal standards agencies of the appropriate country.

GE Healthcare recommends these tests be performed:

Once every 12 months thereafter as part of a regular maintenance plan.
Whenever internal assemblies are serviced.

The suggested Safety Analysis Tests refer to the international standard IEC 60601-1. The tests are generally performed with Safety Testers, on most of them, the measuring circuits according IEC 60601 are already implemented.
The following is a general description of the tests to be performed. For the handling of your Safety Tester follow the user manual.

The tests may be performed under normal ambient conditions of temperature, humidity and pressure and with line voltage.
The leakage currents correspond to 110 % of rated voltage for the tested unit. Most Safety Testers take this into account, otherwise the measured values have to be calculated.

6.1.1 Recommended Test Equipment

- Safety Tester for measurements according to IEC 60601.
- Testing connector according to the following description.

6.1.2 Leakage Current Measurement

To perform the suggested measurements, the unit under test has to be separated from any interconnection to a system. If the unit is part of a system, extended tests according to IEC 60601-1-1 have to be performed. The following diagram shows the Measuring Circuit [M] required for leakage current. The reading in mV corresponds to µA (leakage current). The Safety Testers generally work with this Measuring Circuit [M] and the displayed values are already converted to leakage current.

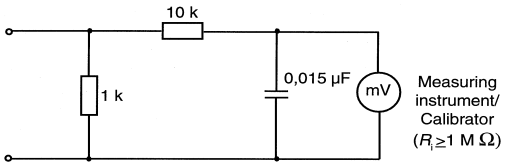

Figure 6-1:

6.1.2.1 Enclosure Leakage Current Test

This test is performed to measure leakage current from chassis to ground during normal conditions (N.C.) and single fault conditions (S.F.C.).
In all cases, the leakage current is measured from any exposed conductive parts to ground, the unit under test has to be switched on and off.

Connect the unit under test to your Safety Tester and measure with the probe to

a) CAM-USB, A/T, A/T KISS:
a foil (10 x 20 cm) wrapped around the CAM-USB, A/T, A/T KISS Interface Box

b) CORINA: the parallelport connector housing from CORINA

– During normal conditions (N.C.), referring to the electrical diagram, measurements have to be done under the following conditions:
  * Polarity switch NORM and RVS
  * GND switch n/a
  * S1 closed

– During single fault conditions (S.F.C.), referring to the electrical diagram, the measurements have to be done under the following conditions:
  * Polarity switch NORM and RVS
  * GND switch n/a
  * S1 open

Test has failed if the measured values are greater than:

N.C.	S.F.C
100 µA	500 µA
	300 µA (U.L. requirements)

Electrical Diagram for Enclosure Leakage Current Test

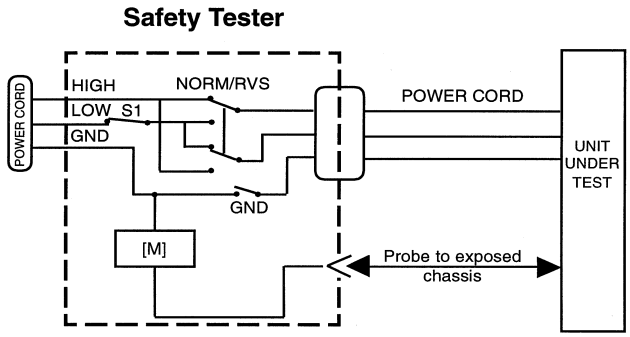

Figure 6-2:

6.1.2.2 Patient Leakage Current Test

This test performs a leakage current test under single fault conditions (S.F.C.) depending on domestic power outlet with 115 or 230 V AC as source into the floating inputs.

In all cases, the leakage current is measured from input jack of unit under test to ground.

Connect the unit under test to your Safety Tester.

– Referring to the electrical diagram, measurements have to be done under the following conditions:
  * Polarity switch NORM and RVS
  * GND switch GND closed
  * S1 closed

Test has failed if the measured values are greater than 50 µA.

Electrical Diagram for Patient Leakage Current Test

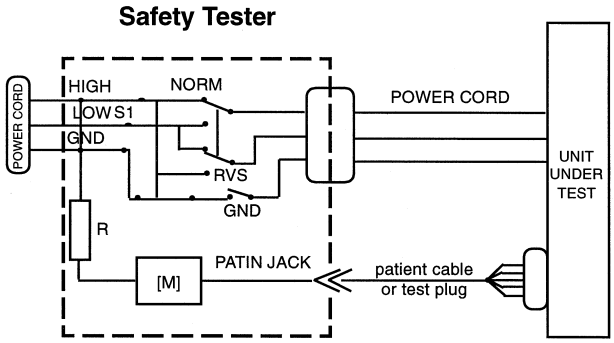

Figure 6-3:

For protection of the test person, the following values of resistor R may be used:

Typ CF 100 kOhm (220 to 240 V)

6.1.2.3 Enclosure Leakage Current Test (System)

CAUTION

Do not operate devices (PC / VGA Monitor / Printer / ...) in the vicinity of the patient (as defined in IEC 60601-1-1), if they do not fulfil the requirements of IEC 60601-1!

All units connected to the CardioSoft system (PC / VGA Monitor / Printer / ...) have to be tested as follow.
Connect all power cords from the units separately for test to your Safety Tester.

– During single fault conditions (S.F.C.), referring to the electrical diagram, the measurements have to be done under the following conditions:
  * Polarity switch NORM and RVS
  * GND switch GND open
  * S1 closed

S.F.C 500 µA

Electrical Diagram for Enclosure Leakage Current Test

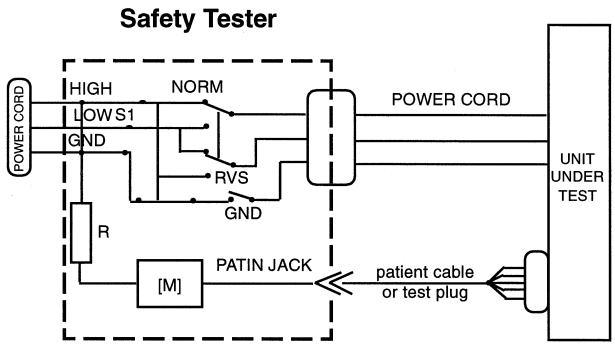

Figure 6-4:

6.1.2.4 Protective Earth Resistance Test

The power cord is to be included in the protective earth resistance test.
This test determines whether the device has a power ground fault.

– The protective earth resistance from power connector to any protective earth connected exposed conductive part is measured.
– Specs. of test circuit: AC current source 50 Hz/60 Hz of at least 10 A up to 25 A with limited output voltage of 6 V.
– If resistance is greater than 100 mOhm, the unit fails this test.

7 Specifications

7.1 Technical Specifications for CAM-USB, CAM-USB A/T, CAM-USB A/T KISS and CAM-14

Table B-1. Performance Specifications - Data Acquisition	
Item	**Description**
Technology	Active, „Type BF“ floating isolated powered 14 channel acquisition module with built-in lead-fail detection and lead prep impedance measurement
Sampling rate	Over-sampling @ 4000 Hz, 12 leads
Dynamic range	320 mV, ±10 mV signal superimposed on ±150 mV DC offset
Resolution	4.88 µV/LSB @ 500 Hz
Noise	< 15 µV peak-to-peak noise over 0.1 to 150 Hz (-3 dB) bandwidth
Frequency response	-3dB, display and writer
High pass filter	0.01 Hz (or 0.05 Hz, special use) with DC offset control measured with enhanced measurement methods 0.1 Hz measured according to YY 1139-2000 „Single and Multichannel Electro-cardiograph“
Common mode rejection	Measured: 100 dB, calculated: > 140 dB (123 dB with AC filter disabled)
Input impedance	> 10 MΩ @ 10 Hz, defibrillator protected
Pace detect	Orthogonal LA, LL, and V6; 750 µV @ 50 µs, Software corrected

Table B-2. Physical				
Item	**CAM-USB**	**CAM-USB A/T**	**CAM-USB A/T KISS**	**CAM-14**
Height	33 mm	45 mm	45 mm	27 mm
Width	155 mm	187 mm	187 mm	125 mm
Depth	95 mm	138 mm	138 mm	95 mm
Weight	525 g	703 g	808 g	180 g
Interfaces included	USB V1.1 USB 2.0 USB 3.0	USB V1.1 USB 2.0 USB 3.0	USB V1.1 USB 2.0 USB 3.0	Proprietary

Table B-3. Safety	
Item	**Description**
Certification	■ UL 2601-1 classified ■ UL classified for CAN/CSA C22.2 No. 601.1 ■ Meets applicable AAMI EC-11 requirements
Type of protection against electrical shock	Class 2
Degree of protection against ingress of liquids	Ordinary
Handling of disposable supplies and other consumables	■ Use only parts and accessories manufactured or recommended by GE Healthcare. ■ Follow manufacturerfs instructions for use for disposable/consumable product. ■ Follow local environmental guidelines concerning the disposal of hazardous materials.
Patient mode of operation	Continuous
Patient leakage current	<10 µA
Degree of protection against electrical shock	Type BF defibrillation protection for the patient cable (acquisition module)
Maintenance frequency	■ Recommended user daily visual inspection and cleaning. ■ Recommended six-month routine maintenance checks and test procedures performed by qualified technical personnel.

Table B-4. Environmental	
Item	**Description**
Operating conditions Temperature Humidity Pressure	 +10 to + 40° C (+50 to 104° F) 25 to 95% RH non-condensing 700 to 1060 hPa
Storage/Transport conditions Temperature Humidity Pressure	 -30 to +70° C 10 to 95% RH non-condensing 500 to 1060 hPa

Table B-5. Power Requirements	
Item	**Description**
CAM-USB	+5 V DC, max. 500 mA, USB-powered
CAM-USB A/T	+12 V DC, max. 1 A by external power supply
CAM-USB A/T KISS	+12 V DC, max. 2 A by external power supply

7.2 Electromagnetic Compatibility of CAM-USB, CAM-USB A/T and CAM-USB A/T KISS

CAM-USB means CAM-14 aquisition module and CAM-USB interface box
CAM-USB A/T means CAM-14 acquisition module, CAM-USB A/T interface box and power supply
AM-USB A/T KISS means CAM-14 acquisition module, CAM-USB A/T KISS interface box and power supply

Changes or modification to this system not expressly approved by GE Healthcare could cause EMC issues with this or other equipment. This system is designed and tested to comply with applicable regulation regarding EMC and needs to be installed and put into service according to the EMC information stated as follows.

WARNING

Use of portable phones or other radio frequency (RF) emitting equipment near the system may cause unexpected or adverse operation.

WARNING

The equipment or system should not be used adjacent to, or stacked with, other equipment. If adjacent or stacked use is necessary, the equipment or system should be tested to verify normal operation in the configuration in which it is being used.

Guidance and Manufacturer's Declaration – Electromagnetic Emissions

Emissions Test	Compliance	Electromagnetic Environment – Guidance
RF emissions CISPR11	Group 1	The equipment uses RF energy only for its internal function. Therefore, its RF emissions are very low and are not likely to cause any interference in nearby electronic equipment.
RF emissions CISPR11	Class B	The equipment is suitable for use in all establishments including domestic establishments and those directly connected to the public low-voltage power supply network that supplies buildings used for domestic purposes.
Harmonic Emissions IEC 61000-3-2	Class A	
Voltage fluctuations/Flicker emissions IEC 61000-3-3	Complies	

Guidance and Manufacturer's Declaration - Electromagnetic Immunity

The CAM-USB / CAM-USB A/T / CAM-USB A/T KISS is intended for use in the electromagnetic environment specified below. It is the responsibility of the customer or user to ensure that the CAM-USB / CAM-USB A/T / CAM-USB A/T KISS is used in such an environment.

Immunity Test	IEC 60601 Test Level	Compliance Level	Electromagnetic Environment - Guidance
Electrostatic discharge (ESD) IEC 61000-4-2	± 6 kV contact ± 8 kV air	± 6 kV contact ± 8 kV air	Floors should be wood, concrete or ceramic tile. If floors are covered with synthetic material, the relative humidity should be at least 30%.
Electrical fast transient/ burst IEC 61000-4-4	± 2 kV for power supply lines ±1 kV for input/output lines	± 2 kV for power supply lines ±1 kV for input/output lines	Mains power should be that of a typical commercial or hospital environment.
Surge IEC 61000-4-5	± 1 kV differential mode ± 2 kV common mode	± 1 kV differential mode not applicable	Mains power should be that of a typical commercial or hospital environment.
Voltage dips, short interruptions and voltage variations on power supply input lines IEC 61000-4-11	<5% Ut (>95% dip in Ut) for 0.5 cycles 40% Ut (60% dip in Ut) for 5 cycles 70% Ut (30% dip in Ut) for 25 cycles <5% Ut (>95% dip in Ut) for 5 s	<5% Ut (>95% dip in Ut) for 0.5 cycles 40% Ut (60% dip in Ut) for 5 cycles 70% Ut (30% dip in Ut) for 25 cycles <5% Ut (>95% dip in Ut) for 5 s	Mains power should be that of a typical commercial or hospital environment. If the user of the CAM-USB / CAM-USB A/T / CAM-USB A/T KISS requires continued operation during power mains interruptions, it is recommended that the CAM-USB / CAM-USB A/T / CAM-USB A/T KISS be powered from an uninterruptible power supply or a battery.
Power frequency (50/ 60 Hz) magnetic field IEC 61000-4-8	3 A/m	3 A/m	Power frequency magnetic fields should be at levels characteristics of a typical location in a typical commercial or hospital environment.

NOTE:

Ut is the AC mains voltage prior to application of the test level.

Guidance and Manufacturer's Declaration – Electromagnetic Immunity

The CAM-USB / CAM-USB A/T / CAM-USB A/T KISS is intended for use in the electromagnetic environment specified below. It is the responsibility of the customer or user to assure that the CAM-USB / CAM-USB A/T / CAM-USB A/T KISS is used in such an environment.

Immunity Test	IEC 60601- test level	Compliance level	Electromagnetic environment – guidance
			Portable and mobile RF communications equipment should be used no closer to any part of the CAM-USB / CAM-USB A/T / CAM-USB A/T KISS, including cables, than the recommended separation distance calculated from the equation applicable to the frequency of the transmitter.
Conducted RF IEC 61000-4-6	3 V_{rms} 150 kHz to 80 MHz	3 V_{rms}	**Recommended separation distance:** $d = 1,17\sqrt{P}$
Radiated RF IEC 61000-4-3	3 V/m 80 MHz to 2,5 GHz	3 V/m	$d = 1,17\sqrt{P}$ 80 MHz to 800 MHz $d = 2,33\sqrt{P}$ 800 MHz to 2,5 GHz where ***P*** is the maximum output power rating of the transmitter in watts (W) according to the transmitter manufacturer and ***d*** is the recommended separation distance in meters (m). Field strengths from fixed RF transmitters, as determined by an electromagnetic site survey,[a] should be less than the compliance level in each frequency range.[b] Interference may occur in the vicinity of equipment marked with the following symbol:

NOTE 1: At 80 MHz and 800 MHz, the higher frequency range applies.

NOTE 2: These guidelines may not apply in all situations. Electromagnetic propagation is affected by absorption and reflection from structures, objects, and people.

a Field strengths from fixed transmitters, such as base stations for radio (cellular/cordless) telephones and land mobile radios, amateur radio, AM and FM radio broadcast, and TV broadcast cannot be predicted theoretically with accuracy. To assess the electromagnetic environment due to fixed RF transmitters, an electromagnetic site survey should be considered. If the measured field strength in the location in which the CAM-USB / CAM-USB A/T / CAM-USB A/T KISS is used exceeds the applicable RF compliance level above, the CAM-USB / CAM-USB A/T / CAM-USB A/T KISS should be observed to verify normal operation. If abnormal performance is observed, additional measures may be necessary, such as re-orienting or relocating the CAM-USB / CAM-USB A/T / CAM-USB A/T KISS.

b Over the frequency range 150 kHz to 80 MHz, field strengths should be less than 3 V/m.

Recommended Separation Distances

The table below provides the recommended separation distances (in meters) between portable and mobile RF communication equipment and the CAM-USB / CAM-USB A/T / CAM-USB A/T KISS.

The CAM-USB / CAM-USB A/T / CAM-USB A/T KISS is intended for use in the electromagnetic environment on which radiated RF disturbances are controlled. The customer or the user of the CAM-USB / CAM-USB A/T / CAM-USB A/T KISS can help prevent electromagnetic interference by maintaining a minimum distance between portable and mobile RF communications equipment (transmitters) and the CAM-USB / CAM-USB A/T / CAM-USB A/T KISS as recommended below, according to the maximum output power of the communications equipment.

	Separation Distance in Meters (m) According to Frequency of Transmitter		
Rated Maximum Output Power of Transmitter in Watts	**150 kHz to 80 MHz** $d = 1,17\sqrt{P}$	**80 MHz to 800 MHz** $d = 1,17\sqrt{P}$	**800 MHz to 2.5 GHz** $d = 2,33\sqrt{P}$
0.01	0.12	0.12	0.23
0.1	0.37	0.37	0.74
1	1.17	1.17	2.33
10	3.7	3.7	7.37
100	11.7	11.7	23.3
At 80 MHz and 800 MHz, the separation distance for the higher frequency range applies.			

For transmitters rated at a maximum output power not listed above, the recommended separation distance [d] in meters (m) can be estimated using the equation applicable to the frequency of the transmitter, where P is the maximum output power rating of the transmitter in watts (W) according to the transmitter manufacturer.

NOTE:

These guidelines may not apply in all instances. Electromagnetic propagation is affected by absorption and reflection from structures, objects and people.

Compliant Cables and Accessories

WARNING

The use of accessories, transducers and cables other than those specified may result in increased emissions or decreased immunity performance of the equipment or system.

The table below lists cables, transducers, and other applicable accessories with which GE Healthcare claims EMC compliance.

NOTE:

Any supplied accessories that do not affect EMC compliance are not included.

Part No	Description
420101-001	14 leadwire set

7.3 Technical Specifications CORINA

7.3.1 ECG Signal Processing

Continuous acquisition of the ECG signal, formation of lead II which is transmitted to signal output [symbol]

- lower cut-off frequency (-3-dB limits) 0.08 Hz
- upper cut-off frequency (-3-dB limits) 150 Hz
- resolution, referred to the input, 20 µV
- gain x 1000
- non-linear distortion better than specified in IEC and AHA recommendations
- noise of signal transmission path below values specified in IEC and AHA recommendations: <2.5 µV rms
- common-mode rejection better than specified in IEC and AHA recommendations
- electrode connections for R, F, N
- input impedance for differential signals between any two electrode connections > 50 MΩ at 10 Hz
- dynamic range for differential signals between any two electrode connections for AC voltage ±10 mV, for superimposed DC voltage (polarization voltage) ±600 mV
- patient leakage current (rms values) according to IEC, class CF: in normal condition < 10 µA, in single-fault condition (e.g. patient in contact with line voltage) < 50 µA
- suppression of pacer pulses, detection via F electrode
- non-destructive range for lead-electrode connections and the neutral electrode connection referred to chassis (either polarity, e.g. defibrillation) 1500 V

7.3.2 Analog Output Data

Important: ECG signal output to synchronize ultrasound units (output signal not suitable for ECG analysis or therapeutic purposes!)

- lead II standard (configurable with CardioSoft V 3.0 and later)
- ECG lead selectable (from CORINA & CardioSoft Version V3.0)
- floating output (± 1500 V referred to ground / chassis)
- 1-V output signal per 1-mV input signal, Umax = ± 10 V
- DC offset over the entire range < 300 mV (typically, full deflection)
- amplitude accuracy over the entire range (typically) < 3%
- RL min 2kOhm
- delay < 10 ms
- pacing pulse filtered out
- raw signal, unfiltered, no ADS
- short-circuit-proof

7.3.3 Signal Output

Insulated ECG signal output, 1 V (floating output)

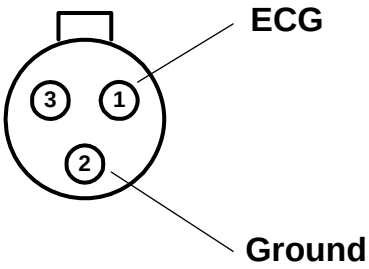

pin assignment
1 = signal output
2 = zero
3 = not assigned

– output voltage +10 V +5%
  minimum load 2 kOhms
  max. output current 5 mA
  delay input/output <10 ms

7.3.4 Power Supply

From plug-in power supply unit type SW 172 supplied with the system

– design in compliance with protection class II
– rated voltage range 230 to 240 V AC / 100...250 V (SW 172)
– operating voltage range 207 to 264 V, 50 Hz / 90 V to 265 V, 50 - 60 Hz (SW 172)
– rated current 0.22 A
– power consumption, typically w/o. pump 6 W, with pump 9 W, 15 W max.
– with Analog Out, typically, w/o. pump 7,5 W, with pump 16,5 W max.

7.3.5 Environment

Operation

– ambient temperature between +10 and +40 °C
– rel. humidity between 30 and 75%
– atmospheric pressure between 700 and 1060 hPa

Storage and Transport

– ambient temperature between -30 and +60 °C
– rel. humidity between 10 and 90 %
– atmospheric pressure between 500 and 1060 hPa

Dimensions and Weight

–	length	400 mm	
–	depth	200 mm	
–	height	48 mm	
–	weight	w/o. pump	700 g
		with pump	900 g

7.3.6 Grounding

Grounding of intermediate circuit for interference elimination (to potential equalization system or water pipe)

7.4 Electromagnetic Compatibility of CORINA

Changes or modification to this system not expressly approved by GE Healthcare could cause EMC issues with this or other equipment. This system is designed and tested to comply with applicable regulation regarding EMC and needs to be installed and put into service according to the EMC information stated as follows.

WARNING

Use of portable phones or other radio frequency (RF) emitting equipment near the system may cause unexpected or adverse operation.

WARNING

The equipment or system should not be used adjacent to, or stacked with, other equipment. If adjacent or stacked use is necessary, the equipment or system should be tested to verify normal operation in the configuration in which it is being used.

Guidance and Manufacturer's Declaration – Electromagnetic Emissions

Emissions Test	Compliance	Electromagnetic Environment – Guidance
RF emissions CISPR11	Group 1	The equipment uses RF energy only for its internal function. Therefore, its RF emissions are very low and are not likely to cause any interference in nearby electronic equipment.
RF emissions CISPR11	Class B	The equipment is suitable for use in all establishments including domestic establishments and those directly connected to the public low-voltage power supply network that supplies buildings used for domestic purposes.
Harmonic Emissions IEC 61000-3-2	not applicable	
Voltage fluctuations/Flicker emissions IEC 61000-3-3	not applicable	

Guidance and Manufacturer's Declaration - Electromagnetic Immunity

The CORINA is intended for use in the electromagnetic environment specified below. It is the responsibility of the customer or user to ensure that the CORINA is used in such an environment.

Immunity Test	IEC 60601 Test Level	Compliance Level	Electromagnetic Environment - Guidance
Electrostatic discharge (ESD) IEC 61000-4-2	± 6 kV contact ± 8 kV air	± 6 kV contact ± 8 kV air	Floors should be wood, concrete or ceramic tile. If floors are covered with synthetic material, the relative humidity should be at least 30%.
Electrical fast transient/ burst IEC 61000-4-4	± 2 kV for power supply lines ±1 kV for input/output lines	± 2 kV for power supply lines not applicable	Mains power should be that of a typical commercial or hospital environment.
Surge IEC 61000-4-5	± 1 kV differential mode ± 2 kV common mode	± 1 kV differential mode ± 2 kV common mode	Mains power should be that of a typical commercial or hospital environment.
Voltage dips, short interruptions and voltage variations on power supply input lines IEC 61000-4-11	<5% Ut (>95% dip in Ut) for 0.5 cycles 40% Ut (60% dip in Ut) for 5 cycles 70% Ut (30% dip in Ut) for 25 cycles <5% Ut (>95% dip in Ut) for 5 s	<5% Ut (>95% dip in Ut) for 0.5 cycles 40% Ut (60% dip in Ut) for 5 cycles 70% Ut (30% dip in Ut) for 25 cycles <5% Ut (>95% dip in Ut) for 5 s	Mains power should be that of a typical commercial or hospital environment. If the user of the CORINA requires continued operation during power mains interruptions, it is recommended that the CORINA be powered from an uninterruptible power supply or a battery.
Power frequency (50/ 60 Hz) magnetic field IEC 61000-4-8	3 A/m	3 A/m	Power frequency magnetic fields should be at levels characteristics of a typical location in a typical commercial or hospital environment.

NOTE:

Ut is the AC mains voltage prior to application of the test leve

Guidance and Manufacturer's Declaration – Electromagnetic Immunity

The CORINA is intended for use in the electromagnetic environment specified below. It is the responsibility of the customer or user to assure that the CORINA is used in such an environment.

Immunity Test	IEC 60601- test level	Compliance level	Electromagnetic environment – guidance
			Portable and mobile RF communications equipment should be used no closer to any part of the CORINA, including cables, than the recommended separation distance calculated from the equation applicable to the frequency of the transmitter.
Conducted RF IEC 61000-4-6	3 V_{rms} 150 kHz to 80 MHz	10 V_{rms}	**Recommended separation distance:** $d = 0,35\sqrt{P}$
Radiated RF IEC 61000-4-3	3 V/m 80 MHz to 2,5 GHz	3 V/m	$d = 1,17\sqrt{P}$ 80 MHz to 800 MHz $d = 2,33\sqrt{P}$ 800 MHz to 2,5 GHz where ***P*** is the maximum output power rating of the transmitter in watts (W) according to the transmitter manufacturer and ***d*** is the recommended separation distance in meters (m). Field strengths from fixed RF transmitters, as determined by an electromagnetic site survey,[a] should be less than the compliance level in each frequency range.[b] Interference may occur in the vicinity of equipment marked with the following symbol:

NOTE 1: At 80 MHz and 800 MHz, the higher frequency range applies.

NOTE 2: These guidelines may not apply in all situations. Electromagnetic propagation is affected by absorption and reflection from structures, objects, and people.

a Field strengths from fixed transmitters, such as base stations for radio (cellular/cordless) telephones and land mobile radios, amateur radio, AM and FM radio broadcast, and TV broadcast cannot be predicted theoretically with accuracy. To assess the electromagnetic environment due to fixed RF transmitters, an electromagnetic site survey should be considered. If the measured field strength in the location in which the CORINA is used exceeds the applicable RF compliance level above, the CORINA should be observed to verify normal operation. If abnormal performance is observed, additional measures may be necessary, such as re-orienting or relocating the CORINA.

b Over the frequency range 150 kHz to 80 MHz, field strengths should be less than 10 V/m.

Recommended Separation Distances

The table below provides the recommended separation distances (in meters) between portable and mobile RF communication equipment and the CORINA.

The CORINA is intended for use in the electromagnetic environment on which radiated RF disturbances are controlled. The customer or the user of the CORINA can help prevent electromagnetic interference by maintaining a minimum distance between portable and mobile RF communications equipment (transmitters) and the CORINA as recommended below, according to the maximum output power of the communications equipment.

	Separation Distance in Meters (m) According to Frequency of Transmitter		
Rated Maximum Output Power of Transmitter in Watts	**150 kHz to 80 MHz** $d = 0,35\sqrt{P}$	**80 MHz to 800 MHz** $d = 1,17\sqrt{P}$	**800 MHz to 2.5 GHz** $d = 2,33\sqrt{P}$
0.01	0.035	0.12	0.23
0.1	0.11	0.37	0.74
1	0.35	1.17	2.33
10	1.1	3.7	7.37
100	3.5	11.7	23.3
At 80 MHz and 800 MHz, the separation distance for the higher frequency range applies.			

For transmitters rated at a maximum output power not listed above, the recommended separation distance [d] in meters (m) can be estimated using the equation applicable to the frequency of the transmitter, where P is the maximum output power rating of the transmitter in watts (W) according to the transmitter manufacturer.

NOTE:

These guidelines may not apply in all instances. Electromagnetic propagation is affected by absorption and reflection from structures, objects and people.

Compliant Cables and Accessories

WARNING

The use of accessories, transducers and cables other than those specified may result in increased emissions or decreased immunity performance of the equipment or system.

The table below lists cables, transducers, and other applicable accessories with which GE Healthcare claims EMC compliance.

NOTE:

Any supplied accessories that do not affect EMC compliance are not included.

Part No	Description
223 418 XX	Patient trunk cable, 10-lead
384 018 08 / 09	Set of 10 leadwires

8 Spare Parts

The parts lists in this chapter supply enough detail for you to order parts for the assemblies considered field serviceable.

If you require additional information, schematic diagrams, or troubleshooting assistance, contact Technical Support.

8.1 CAM-USB

Hardware	
Part Number	**Item**
2009000-001	CAM-USB Interface, V1
2040437-013	FRU - CAM-USB Interface, V2

8.2 CAM-USB A/T

Hardware	
Part Number	**Item**
2009500-001	CAM-USB Interface A/T, V1
2040438-017	FRU - CAM-USB Interface A/T, V2
2024264-001	PWR SPLY SW 30W 12VDC/2.5A MEDICAL

8.3 CAM-USB A/T KISS

Hardware	
Part Number	**Item**
2009500-009	CAM-USB Interface A/T KISS, V1
2040438-018	FRU - CAM-USB Interface A/T KISS, V2
2024264-001	PWR SPLY SW 30W 12VDC/2.5A MEDICAL

8.4 CORINA

NOTE

The CORINA acquisition module is not for use in the U.S. and Canada.

Power Supply	
Part Number	**Item**
2000300-001	Power Supply 12V - Table Version with International Main Power Input Connector

Housing	
Part Number	**Item**
43252221	Lower Shell
43252261	Upper Shell
90227200	Shield and insulation tube
43252231	Connection Panel Patient Input
43252223	Fiber optic
92916645	Luer connection kit (female)
92916648	Nut
92916654	Filler cap

PC-Connection cable	
Part Number	**Item**
2001934-001 or 2009877-001	Connection Cable to PC for CORINA 10111831... 38 only for CORINA up to Rev. F
2024996-001	CABLE ASSY INTCON CORINA TO PC for CORINA 10111831..38 Rev. G and higher
91541779	PANEL PLUG
91541780	PLUG HOUSING

Pump	
Part Number	**Item**
30344291	Pump 12 V (Standard)
30344485	Pump for Corina with Analog output

CORINA10111831...32 (only for CardioSoft Version starting from V4.14)	
Part Number	**Item**
2002899-001	PCB CORINA only for CORINA up to Rev. F
2002980-001	Exchange PCB CORINA only for CORINA up to Rev. F
2024804-001	PCB CORINA for CORINA Rev. G and higher
2024804-004	Exchange PCB CORINA for CORINA Rev. G and higher

CORINA 10111833...38 (only for CardioSoft Version starting from V4.14)	
Part Number	**Item**
2002899-002	PCB Corina Analog Output only for CORINA up to Rev. F
2002981-001	Exchange PCB Corina Analog Output only for CORINA up to Rev. F
2024807-001	PCB CORINA ANALOG OUT for CORINA Rev. G and higher
2024807-005	Exchange PCB CORINA ANALOG OUT for CORINA Rev. G and higher

8.5 KISS Module

Dongle	
Part Number	**Item**
2042109-500	KISS Multilead

8.6 Dongles

Dongle	
Part Number	**Item**
2026115-002	Dongle USB Server
45110401	Print Port Dongle

8.7 Software

Software	
Part Number	**Item**
2006301-041	CD CASE/CardioSoft/CS InSite ExC V1.0 (for Windows XP only)
2074956-001	CD CAM-USB V2 Driver Set 1.0

8.8 Cables

Cables	
Part Number	**Item**
700609-002	Treadmill Cable

GE Medical Systems
Information Technologies, Inc.
8200 West Tower Avenue
Milwaukee, WI 53223 USA
Tel: + 1 414 355 5000
1 800 437 1171 (US Only)
Fax: + 1 414 355 3790

Asia Headquarters
GE Medical Systems
Information Technologies Asia; GE (China) Co., Ltd.
No. 1 Huatuo Road,
Zhangjiang Hi-tech Park Pudong
Shanghai, People's Republic of China 201203
Tel: + 86 21 5257 4650
Fax: + 86 21 5208 2008

www.gehealthcare.com