Volume 1

Operation Manual

ACCUVIX A30

SAMSUNG

SAMSUNG MEDISON

WARRANTY

Samsung Medison provides the following warranty to the purchaser of this unit. This warranty is valid for a period of one year from the date of installation and covers all problems caused by faulty workmanship or faulty material. Samsung Medison will, as sole and exclusive remedy and at no charge, replace any such defective unit returned to Samsung Medison within the designated warranty period.

The warranty does not cover damages and loss caused by outside factors including, but not limited to, fire, flood, storm, tidal wave, lightning, earthquake, theft, abnormal conditions of operation, and intentional destruction of the equipment. Damage caused by equipment relocation is not covered.

The warranty is void in cases where the equipment has been damaged as a result of an accident, misuse, abuse, dropping, or when attempts to modify or alter any part or assembly of the equipment have taken place.

Parts with cosmetic defects or deterioration will not be replaced. Replacement of batteries, training materials, and supplies are not covered.

Samsung Medison will not be responsible for incidental or consequential damages of any kind arising from or connected with the use of the equipment.

Samsung Medison will not be responsible for any loss, damage, or injury resulting from a delay in services rendered under the warranty

This limited warranty is in lieu of all other warranties expressed or implied, including warranties of merchant ability or fitness for any particular use. No representative or other person is authorized to represent or assume for Samsung Medison any warranty liability beyond that set forth herein.

Defective equipment shipped from you to Samsung Medison must be packed in the replacement cartons. Shipping and insurance costs are the responsibility of the customer. To return defective material to Samsung Medison contact the Samsung Medison Customer Service Department.

Samsung Medison or a local distributor will make available, upon request, circuit diagrams, a component parts list, descriptions, calibration instructions and other information which will assist your appropriately qualified technical personnel to repair those parts of the equipment which are designed by Samsung Medison as repairable.

CAUTION: United State federal law restricts this device to sale by or on the order of physicians.

SAMSUNG SAMSUNG MEDISON

MANUFACTURER : SAMSUNG MEDISON CO., LTD.
42, Teheran-ro 108-gil, Gangnam-gu, Seoul, Korea

Customer Service Department : SAMSUNG MEDISON CO., LTD.
TEL : 82-2-2194-1234 | FAX : 82-2-2194-1071
Website: www.samsungmedison.com

EC Representative : SAMSUNG ELECTRONICS (UK) LTD.
Blackbushe Business Park, Saxony Way,
Yateley, Hampshire, GU46 6GG, UK

ACCUVIX A30

Diagnostic Ultrasound System

Operation Manual

Version 2.00.00

English

MI68-02411A

PROPRIETRAY INFORMATION AND SOFTWARE LICENSE

The Customer shall keep confidential all proprietary information furnished or disclosed to the Customer by Samsung Medison unless such information has become part of the public domain through no fault of the Customer. The Customer shall not use such proprietary information, without the prior written consent of Samsung Medison, for any purpose other than the maintenance, repair or operation of the goods.

Samsung Medison systems contain Samsung Medison proprietary software in machine-readable form. Samsung Medison retains all its rights, title and interest in the software except that purchase of this product includes a license to use the machine-readable software contained in it. The Customer shall not copy, trace, disassemble or modify the software. Transfer of this product by the Customer shall constitute a transfer of this license that shall not be otherwise transferable. Upon cancellation or termination of this contract or return of the goods for reasons other than repair or modification, the Customer shall return to Samsung Medison all such proprietary information.

Safety Requirements

Classifications:

- Type of protection against electrical shock: Class I
- Degree of protection against electrical shock (Patient connection): Type BF equipment
- Degree of protection against harmful ingress of water: Ordinary equipment
- Degree of safety of application in the presence of a flammable anesthetic material with air or with oxygen or nitrous oxide: Equipment not suitable for use in the presence of a flammable anesthetic mixture with air or with oxygen or nitrous oxide.
- Mode of operation: Continuous operation

Electromechanical safety standards met:

- Medical Electrical Equipment, Part 1: General Requirements for Basic Safety and Essential Performance [IEC 60601-1:2005]
- Medical Electrical Equipment, Part 1-2: General Requirements for Basic Safety and Essential Performance- Collateral Standard: Electromagnetic Compatibility – Requirements and Tests [IEC 60601-1-2:2007]
- Medical Electrical Equipment, Part 1-6: General Requirements for Basic Safety and Essential Performance – Collateral Standard: Usability [IEC 60601-1-6:2006]
- Medical Electrical Equipment, Part 2-37: Particular Requirements for the Basic Safety and Essential Performance of Ultrasonic Medical Diagnostic and Monitoring Equipment [IEC60601-2-37:2007]
- Medical Electrical Equipment, Part 1: General Requirements for Safety [IEC 60601-1:1988 with A1:1991 and A2:1995]
- Medical Electrical Equipment, Part 1: General Requirements for Safety – 1 Collateral Standard: Safety Requirement for Medical Electrical Systems [IEC 60601-1-1:2000]
- Medical Electrical Equipment, Part 1: General Requirements for Safety – 2 Collateral Standard: Electromagnetic Compatibility – Requirements and Test [IEC 60601-1-2:2001, A1:2004]
- Medical Electrical Equipment, Part 1: General Requirements for Safety – 4 Collateral Standard: Programmable Electrical Medical Systems [IEC 60601-1-4: 1996, A1:1999]

- Medical Electrical Equipment, Part 2: Particular Requirements for Safety – 37 Ultrasonic Medical Diagnostic and Monitoring Equipment [IEC60601-2-37: 2001 with A1:2004, A2:2005]
- Medical Devices – Application of Risk Management to Medical Devices [ISO 14971:2007]
- Medical Electrical Equipment, Part 1: General Requirements for Safety [UL60601-1:2003]
- Medical Electrical Equipment, Part 1: General Requirements for Safety [CAN/CSA 22.2 No.601.1-M90:1990, with R2003, with R2005]
- Biological Evaluation of Medical Devices [ISO10993 : 2009]
- Standard Means for the Reporting of the Acoustic Output of Medical Diagnostic Ultrasonic Equipment [IEC61157:2007]

Declarations

This is the CSA symbol for Canada and the United States of America.

This is the manufacturer's declaration of product compliance with applicable EEC directive(s) and the European notified body.

This is the manufacturer's declaration of product compliance with applicable EEC directive(s).

This is the GMP symbol for Korean Good Manufacturing Practice quality system regulation.

Read This First

You should be familiar with all of these areas before attempting to use this manual or your ultrasound system.

- Please keep this user guide close to the product as a reference when using the system.
- For safe use of this product, you should read 'Chapter 1. Safety' and 'Chapter 8. Maintenance' in this manual, prior to starting to use this system.
- This manual does not include diagnosis results or opinions. Also, check the measurement reference for each application's result measurement before making the final diagnosis.
- This product is an ultrasound scanner and cannot be used from a user's PC. We are not responsible for errors that occur when the system software is run on a user's PC.
- Only medical doctors or persons supervised by medical doctors should use this system. Persons who are not qualified must not operate this product.
- The manufacturer is not responsible for any damage to this product caused by carelessness and/or neglect by the user.
- Information contained in this operating manual is subject to change without prior notice.
- Products that are not manufactured by Samsung Medison are marked with the trademark of their respective copyright holders.
- The headings below describe vitally important precautions necessary to prevent hazards.

DANGER: Ignoring a DANGER warning will risk life-threatening injury.

WARNING: Used to indicate the presence of a hazard that can cause serious personal injury, or substantial property damage.

CAUTION: Indicates the presence of a hazard that can cause equipment damage.

NOTE: The accompanying information covers an installation, operation, or maintenance procedure that requires careful attention of the user, but has little chance of leading directly to a dangerous situation.

If You Need Assistance

If you require a copy of the service manual or assistance with the product, please contact Samsung Medison customer service department or your distributor.

Revision History

This operation manual's revision history is as follows:

VERSION	DATE	NOTE
v2.00.00-02	2012-06-07	Initial Release

System Upgrades and Manual Set Updates

Upgrades may be announced that consist of hardware or software improvements. Updated manuals will accompany those system upgrades.

Check if this version of the manual is correct for the system version. If not, please contact the Customer Service Department.

Table of Contents – Volume 1

Chapter 1 Safety

Indication for Use 1-3
Contraindications 1-3

Safety Signs 1-4
Safety Symbols 1-4
Symbols 1-5
Labels 1-6

Electrical Safety 1-9
Prevention of Electric Shock 1-9
ECG-Related Information 1-11
ESD 1-11
EMI 1-12
EMC 1-12

Mechanical Safety 1-19
Moving the Equipment 1-19
Safety Notes 1-20

Biological Safety 1-22
ALARA Principle 1-22

Environmental Protection 1-36
Correct Disposal of This Product (Waste Electrical & Electronic Equipment) 1-36

Chapter 2 Introduction

Specifications 2-3

Product Configuration 2-5
Monitor 2-7
Control Panel 2-9
Console 2-14
Peripheral Devices 2-16
Probes 2-19
Accessories 2-20
Optional Functions 2-21

Chapter 3 Starting Diagnosis

Power Supply 3-3
Powering On 3-3
Powering Off 3-3

Probes & Applications 3-4
Probe and Application Selection 3-5
Probe Userset Management 3-6

Patient Information 3-9
Patient Information Entry 3-11
Changing Measurements 3-22
Work list Search 3-25
Searching for Patient Information 3-26
Restarting the Exam 3-34

Chapter 4 Diagnosis Modes

Information 4-3
Diagnosis Mode Types 4-3
Basic Use 4-4

Basic Mode 4-7
2D Mode 4-7
M Mode 4-20
Color Doppler Mode 4-23
Power Doppler Mode 4-28
PW Spectral Doppler Mode 4-31
CW Spectral Doppler Mode 4-36
TDI Mode 4-38
TDW Mode 4-40
ElastoScan Mode 4-42

Combined Mode 4-49
2D/C/PW Mode 4-49
2D/PD/PW Mode 4-49
2D/C/CW Mode 4-49
2D/PD/CW Mode 4-49
2D/C/M Mode 4-50
Dual Live Mode 4-50
2D/TDI/TDW 4-50

MULTI-IMAGE MODE 4-52
Dual Mode 4-52
Quad Mode 4-53

3D/4D Mode 4-54
3D Stand By 4-58
3D View - MPR 4-62
VOCAL 4-72
3D XI 4-81
XI VOCAL 4-90
4D 4-97
XI STIC 4-98
3D Utility Menu 4-102

Chapter 5 Measurements and Calculations

Measurement Accuracy 5-3
Causes of Measurement Errors 5-3
Optimization of Measurement Accuracy 5-5
Measurement Accuracy Table 5-7

Basic Measurements 5-8
Distance Measurements 5-11
Circumference and Area Measurement 5-17
Volume Measurement 5-19

Calculations by Application 5-22
Things to note 5-22
Common Measurement Methods 5-27
OB Calculations 5-32
Gynecology Calculations 5-41
Cardiac Calculations 5-44
Vascular Calculations 5-60
Fetal Heart Calculations 5-71
Urology Calculations 5-75
Abdomen Calculations 5-79
Small Parts Calculations 5-82
TCD Calculations 5-87
Pediatric Hip Calculations 5-89
Musculoskeletal Calculations 5-91

Reports 5-92
Report View 5-92
Editing Reports 5-100
Data Management 5-107
Closing Reports 5-108

Reference Manual

Samsung Medison is providing an additional Accuvix A30 Reference Manual (English version).

Chapter 1

Safety

▣ ***Indication for Use*** ***1-3***

Contraindications 1-3

▣ ***Safety Signs*** ***1-4***

Safety Symbols 1-4

Symbols 1-5

Labels 1-6

▣ ***Electrical Safety*** ***1-9***

Prevention of Electric Shock 1-9

ECG-Related Information 1-11

ESD 1-11

EMI 1-12

EMC 1-12

▣ ***Mechanical Safety*** ***1-19***

Moving the Equipment 1-19

Safety Notes 1-20

▣ ***Biological Safety*** ***1-22***

ALARA Principle 1-22

▣ ***Environmental Protection*** ***1-36***

Correct Disposal of This Product
(Waste Electrical & Electronic Equipment) 1-36

Indication for Use

The Accuvix A30 Diagnostic Ultrasound System and transducers are intended for diagnostic ultrasound imaging and fluid analysis of the human body.

The clinical applications include: Fetal, Abdominal, Pediatric, Small Organs, Neonatal Cephalic, Adult Cephalic, Trans-rectal, Trans-vaginal, Muscular-Skeletal (conventional, superficial), Cardiac Adult, Cardiac Pediatric and Peripheral-vessel.

Contraindications

The Accuvix A30 system is not intended for ophthalmic use or any use causing the acoustic beam to pass through the eye.

CAUTION:

- Federal law restricts this device to sale by or on the order of a physician.
- The method of application or use of the device is described in the manual 'Chapter 3. Starting Diagnosis' and 'Chapter 4. Diagnosis Modes'.

Safety Signs

Please read this chapter before using the Samsung Medison ultrasound system. It is relevant to the ultrasound system, the probes, the recording devices, and any of the optional equipment.

Accuvix A30 is intended for use by, or by the order of, and under the supervision of, a licensed physician who is qualified for direct use of the medical device.

Safety Symbols

The International Electrotechnical Commission (IEC) has established a set of symbols for medical electronic equipment, which classify a connection or warn of potential hazards. The classifications and symbols are shown below:

Symbols	Description	Symbols	Description
V~	AC (Alternating Current) voltage source		Left and right Audio / Video input
	Electric shock hazard warning		Left and right Audio / Video output
	Classification based on degree of protection against electric hazard (Type BF)		Remote print output
	Classification based on degree of protection against electric hazard (Type CF)		Foot switch connector
	Power switch (Supplies/cuts the power to the product)		ECG connector
	OFF (Cuts the power to a part of the product)		USB connector
	WARNING: The accompanying information must be followed to prevent serious accidents and/or damage to property.		Microphone connector
	CAUTION: The accompanying information helps to avoid accidents and/or damage to property.	IPX 7	Protection against the effects of immersion

Symbols	Description	Symbols	Description
	Refer to the operation manual	IPX 1	Protection against dripping water
	ON (Supplies power to a part of the product)		Probe connector
	Identifies an equipotential ground		ESD (Electrostatic Discharge) caution
	Indicates dangerous voltages over 1000V AC or 1500V DC		Do not sit on the control panel
	Protective earth connected to conductive parts of Class I equipment for safety purposes		Do not push the product
	Data Output port		Do not lean against the product
	Data Input port		Follow the operation manual
	Data Input/Output port		

Symbols

Symbols	Description	Symbols	Description
EC REP	Authorized Representative In The European Community		Manufacturer

Labels

Phrases containing the words 'warning' and/or 'caution' are displayed on the product's surface in order to protect it.

SAMSUNG MEDISON CO., LTD.
42, Teheran-ro 108-gil, Gangnam-gu,
Seoul, Korea
www.samsungmedison.com

EC REP SAMSUNG ELECTRONICS (UK) LTD.
Blackbushe Business Park, Saxony Way,
Yateley, Hampshire, GU46 6GG, UK

- MODEL/MODELL/MODÈLE: ACCUVIX A30
- POWER/NETZ/ALIMENTATION: 100-240V~, 1100VA, 50/60Hz

CE 0123

C US

WARNING
-Do not remove the system's covers; hazardous voltages are present inside. The cabinet panels must be in place while the system is in use.
-Öffnen Sie das Gerät nicht: Im Inneren gibt es lebensgefährliche elektrische Spannungen. Das Gerät darf nur vollständig und ungeöffnet betrieben werden.
-Ne pas enlever les panneaux de protection du système ; il y a de l'électricité à l'intérieur. Ces panneaux de protection doivent être en place quand le système est en marche.

CAUTION
-Please keep this operation manual close to the product as a reference when using the system.
-Bewahren Sie bitte diese Bedienungsanleitung bei der Benutzung als Referenz in der Nähe des Gerätes auf.
-Veuillez conserver ce manuel comme référence à proximité du produit lors de l'utilisation du système.
-Make sure that peripheral devices and probes are securely fastened to the cart.
Confirm the status of the peripherals and probes. These should be firmly attached. Move the cart slowly after checking the brakes.
-Überprüfen Sie, ob die Peripheriegeräte und Sonden sicher am Wagen befestigt sind. Sie müssen vollständig fixiert sein. Lösen Sie ggf. die Bremsen, und bewegen Sie den Wagen langsam.
-Vérifier que les périphériques et les sondes sont correctement fixés au chariot de transport. Confirmer l'état des périphériques et des sondes. Ceux-ci doivent être parfaitement fixés. Déplacer lentement le chariot de transport après avoir vérifié les freins des roues.

CAUTION
-Before power on, check the operating voltage of 110V or 220V.
-Beim Stromanschluss unbedingt die Spannung (110V/220V) überprüfen.
-Vérifier que votre prise délivre bien une tension de 110V/220V avant de brancher l'appareil.

[This product is covered by US pat No (5,107,837/5,143,070/5,178,147/ 5,247,937/5,293,870/5,474,070/ 6,270,459/6,494,834/6,687,625) and their equivalents in other countries.]

MADE IN KOREA 275-K-B061B

SAMSUNG MEDISON CO., LTD.
42, Teheran-ro 108-gil, Gangnam-gu,
Seoul, Korea
www.samsungmedison.com

EC REP SAMSUNG ELECTRONICS (UK) LTD.
Blackbushe Business Park, Saxony Way,
Yateley, Hampshire, GU46 6GG, UK

- MODEL/MODELL/MODÈLE: ACCUVIX A30
- POWER/NETZ/ALIMENTATION: 100-120/200-240V~, 1100VA, 50/60Hz

CE 0123

C US

WARNING
-Do not remove the system's covers; hazardous voltages are present inside. The cabinet panels must be in place while the system is in use.
-Öffnen Sie das Gerät nicht: Im Inneren gibt es lebensgefährliche elektrische Spannungen. Das Gerät darf nur vollständig und ungeöffnet betrieben werden.
-Ne pas enlever les panneaux de protection du système ; il y a de l'électricité à l'intérieur. Ces panneaux de protection doivent être en place quand le système est en marche.

CAUTION
-Please keep this operation manual close to the product as a reference when using the system.
-Bewahren Sie bitte diese Bedienungsanleitung bei der Benutzung als Referenz in der Nähe des Gerätes auf.
-Veuillez conserver ce manuel comme référence à proximité du produit lors de l'utilisation du système.
-Make sure that peripheral devices and probes are securely fastened to the cart.
Confirm the status of the peripherals and probes. These should be firmly attached. Move the cart slowly after checking the brakes.
-Überprüfen Sie, ob die Peripheriegeräte und Sonden sicher am Wagen befestigt sind. Sie müssen vollständig fixiert sein. Lösen Sie ggf. die Bremsen, und bewegen Sie den Wagen langsam.
-Vérifier que les périphériques et les sondes sont correctement fixés au chariot de transport. Confirmer l'état des périphériques et des sondes. Ceux-ci doivent être parfaitement fixés. Déplacer lentement le chariot de transport après avoir vérifié les freins des roues.

CAUTION
-Before power on, check the operating voltage of 110V or 220V.
-Beim Stromanschluss unbedingt die Spannung (110V/220V) überprüfen.
-Vérifier que votre prise délivre bien une tension de 110V/220V avant de brancher l'appareil.

[This product is covered by US pat No (5,107,837/5,143,070/5,178,147/ 5,247,937/5,293,870/5,474,070/ 6,270,459/6,494,834/6,687,625) and their equivalents in other countries.]

MADE IN KOREA MI68-01918B

[Label 1. ID label]

[Label 2. Tip-over caution label]

[Label 3. Control panel caution label]

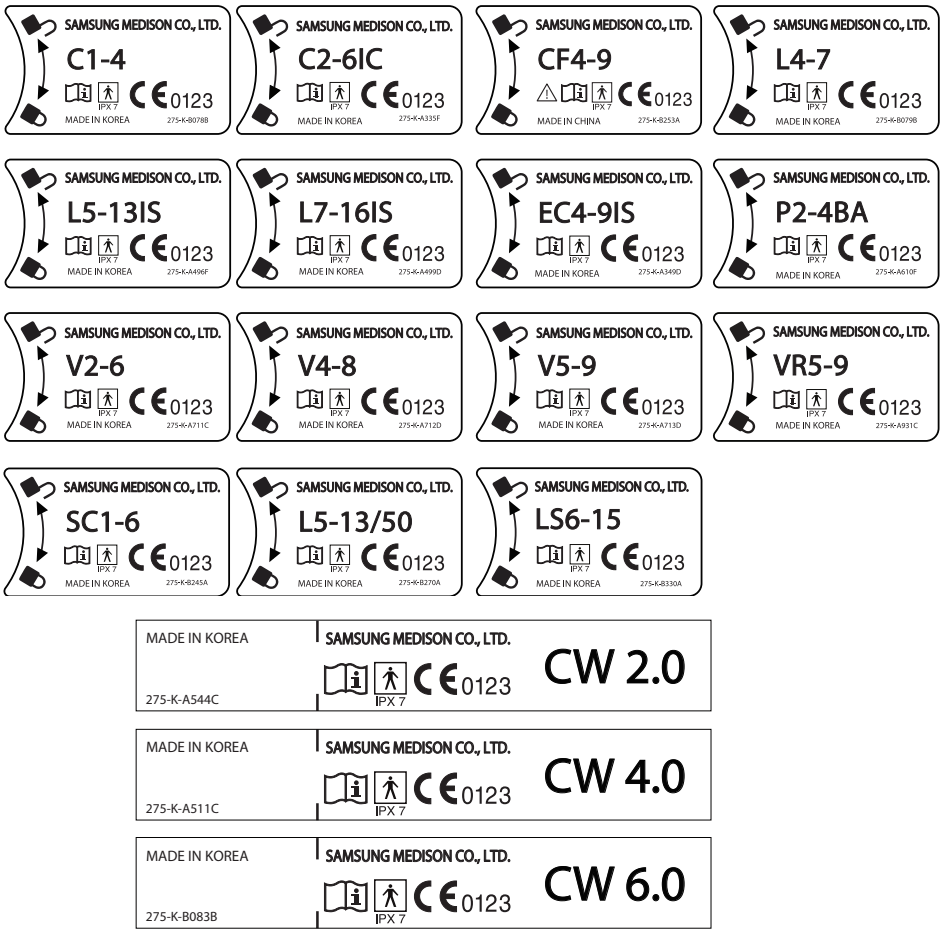

[Label 4. Probe ID Label]

Electrical Safety

This equipment has been verified as a Class I device with Type BF applied parts.

CAUTION:

- As for US requirement, the LEAKAGE CURRENT might be measured from a center-tapped circuit when the equipment connects in the United States to 240V supply system.
- To help assure grounding reliability, connect to a "hospital grade" or "hospital only" grounded power outlet.

Prevention of Electric Shock

In a hospital environment, hazardous current can form due to potential differences between exposed conductive parts and connected devices. The solution to the problem is consistent equipotential bonding. Medical equipment is connected with connecting leads made up of sockets which are angled to the equipotential bonding network in medical rooms.

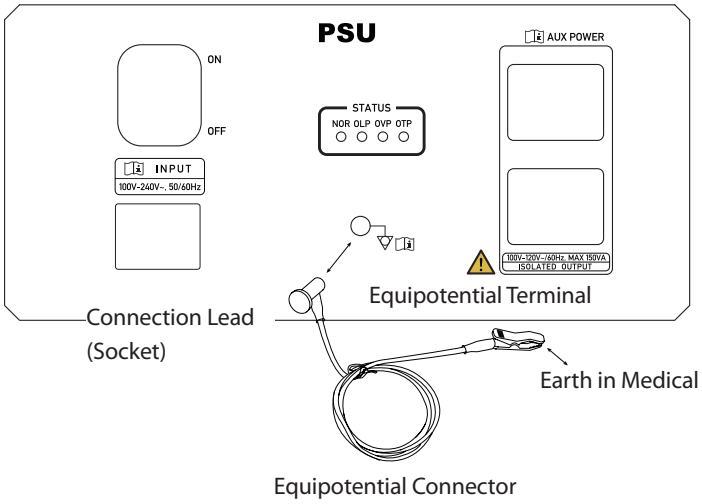

[Figure 1.1 Equipotential Bonding]

Additional equipment connected to medical electrical equipment must comply with the respective IEC or ISO standards (e.g. IEC 60950 for data-processing equipment). Furthermore, all configurations must comply with the requirements for medical electrical systems (see IEC 60601-1-1 or clause 16 of the 3rd Ed. of IEC 60601-1, respectively). Anybody connecting additional equipment to medical electrical equipment configures a medical system and is therefore responsible for the system complying with the requirements for medical electrical systems.

WARNING:

- Electric shock may result if this system, including all of its externally mounted recording and monitoring devices, is not properly grounded.
- Never remove the cover from the product. Hazardously high voltage flows through the product. All internal adjustments and replacements must be made by a qualified Samsung Medison Customer Service Department.
- Always check the product's casing, cables, cords, and plugs for damage before using the product. Disconnect and do not use the power source if the face is cracked, chipped, torn, the housing is damaged, or if the cable is abraded.
- Always disconnect the system from the wall outlet prior to cleaning it.
- All patient contact devices, such as probes and ECG leads, must be removed from the patient prior to the application of a high voltage defibrillation pulse.
- The use of flammable anesthetic gas or oxidizing gases (N_2O) should be avoided. Doing so may cause an explosion.
- Avoid placing the system where it is likely to be difficult to operate, or disconnect.
- Do not use HF surgical equipment with the system. Any malfunctions in the HF surgical equipment may result in burns to the patient.
- The System must only be connected to a supply mains with protective earth to avoid risk of electric shock.

CAUTION:

- The system has been designed for 100-120VAC and 200-240VAC; you should select the input voltage of the printer and VCR. Prior to connecting a peripheral power cord, verify that the voltage indicated on the power cord matches the voltage rating of the peripheral device.
- An isolation transformer protects the system from power surges. This continues to operate when the system is on standby.
- Do not immerse the cable in liquids. Cables are not waterproof.
- The auxiliary socket outlets installed on this system are rated 100-120V and 200-240V, with a maximum total load of 150VA. Only use these outlets for supplying power to equipment that is intended to be part of the ultrasound system. Do not connect additional multiple-socket outlets or extension cords to the system.
- Do not connect any peripheral devices not listed in this manual to the auxiliary socket outlets of the system.
- Do not touch SIP/SOP and the patient simultaneously. There is a risk of electric shock from current leakage.

ECG-Related Information

WARNING:

- This product does not support ECG monitoring. Therefore, it will not recognize incompatible ECG signals.
- Do not use the ECG electrodes of HF surgical equipment. Any malfunctions in the HF surgical equipment may result in burns to the patient.
- Do not use ECG electrodes during cardiac pacemaker procedures or other electrical stimulators.
- Do not use ECG leads and electrodes in an operating room.

ESD

Electrostatic discharge (ESD), commonly referred to as a static shock, is a naturally occurring phenomenon. ESD is most prevalent during conditions of low humidity, which can be caused by heating or air conditioning. The static shock, or ESD, is a discharge of the electrical energy build-up from a charged individual to a lesser or uncharged individual or object. An ESD occurs when an individual with an electrical energy build-up comes in to contact with conductive objects such as metal doorknobs, file cabinets, computer equipment, and even other individuals.

CAUTION:

- The level of electrical energy discharged from a system user or a patient to an ultrasound system can be significant enough to cause damage to the system or probes.
- Always perform the pre-ESD preventive procedures before using connectors marked with the ESD warning label.
  - Apply anti-static spray to carpets or linoleum.
  - Use anti-static mats.
  - Ground the product to the patient table or bed.
- It is highly recommended that the user be given training on ESD-related warning symbols and preventive procedures.

EMI

This product complies with EMI (Electromagnetic Interference) standards. However, using the system inside an electromagnetic field can lower the quality of ultrasound images and even damage the product.

If this occurs often, Samsung Medison suggests a review of the environment in which the system is being used, to identify possible sources of radiated emissions. These emissions could be from other electrical devices used within the same room or an adjacent room. Communication devices, such as cellular phones and pagers, can cause these emissions. The existence of radios, TVs, or microwave transmission equipment nearby can also cause interference.

CAUTION: In cases where EMI is causing disturbances, it may be necessary to relocate the system.

EMC

The testing for the EMC (Electromagnetic Compatibility) of this system has been performed according to the international standard for EMC with medical devices (IEC60601-1-2). This IEC standard was adopted in Europe as the European norm (EN60601-1-2).

Guidance and Manufacturer's Declaration – Electromagnetic Emissions

This product is intended for use in the electromagnetic environment specified below. The customer or the user of this product should assure that it is used in such an environment.

Emission test	Compliance	Electromagnetic environment guidance
RF Emission CISPR 11	Group 1	The Ultrasound System uses RF energy only for its internal function. Therefore, its RF emissions are very low and are not likely to cause any interference in nearby electronic equipment.
RF Emission CISPR 11	Class B	The Ultrasound System is suitable for use in all establishments, including domestic establishments and those directly connected to the public low-voltage power supply network that supplies buildings used for domestic purposes.
Harmonic Emission IEC 61000-3-2	Class A	
Flicker Emission IEC 61000-3-3	Complies	

Approved Cables, Transducers and Accessories for EMC

Approved Cable for Electromagnetic Compliance

Cables connected to this product may affect its emissions. Refer to the table below for recommended cable types and lengths:

Cable	Type	Length
VGA	Shielded	Normal
RS232C	Shielded	Normal
USB	Shielded	Normal
LAN(RJ45)	Twisted pair	Any
S-Video	Shielded	Normal
Foot Switch	Shielded	2.5m
B/W Printer	Unshielded Coaxial	Normal
MIC	Unshielded	Any
Printer Remote	Unshielded	Any
Audio R.L	Shielded	Normal
VHS	Shielded	Normal
ECG AUX input	Shielded	< 3m
Parallel	Shielded	Normal

Probe

The probes listed in 'Chapter 9. Probes' of this manual comply with Group1 Class B emission requirements of International Standard CISPR 11.

Approved Accessories for Electromagnetic Compliance

Accessories used with this product may affect its emissions.

CAUTION: When connecting other customer-supplied accessories to the system, such as a remote printer, it is the user's responsibility to ensure the electromagnetic compatibility of the system. Use only CISPR 11 or CISPR 22, CLASS B compliant devices.

WARNING: The use of cables, transducers, and accessories, other than those specified, may result in increased emissions or decreased immunity of the Ultrasound System.

Immunity test	IEC 60601 test level	Compliance level	Electromagnetic environment guidance
Electrostatic discharge (ESD) IEC 61000-4-2	±6KV contact ±8KV air	±6KV contact ±8KV air	Floors should be wood, concrete or ceramic tile. If floors are covered with synthetic material, the relative humidity should be at least 30%.
Electrical fast transient/burst IEC 61000-4-4	±2KV for power supply lines ±1KV for input/output lines	±2KV for power supply lines ±1KV for input/output lines	Mains power quality should be that of a typical commercial or hospital environment.
Surge IEC 61000-4-5	±1KV differential mode ±2KV common mode	±1KV differential mode ±2KV common mode	Mains power quality should be that of a typical commercial or hospital environment.
Voltage dips, short interruptions and voltage variations on power supply input lines IEC 61000-4-11	<5% U_T for 0.5 cycles (>95% dip in U_T) 40% U_T for 5 cycles (60% dip in U_T) 70% U_T for 25 cycles (30% dip in U_T) <5% U_T for 5 s (<95% dip in U_T)	<5% U_T for 0.5 cycles (>95% dip in U_T) 40% U_T for 5 cycles (60% dip in U_T) 70% U_T for 25 cycles (30% dip in U_T) <5% U_T for 5 s (<95% dip in U_T)	Mains power quality should be that of a typical commercial or hospital environment. If the user of this product requires continued operation during power mains interruptions, it is recommended that this product be powered from an uninterruptible power supply or a battery.
Power frequency magnetic field (50/60 Hz) IEC 61000-4-8	3 A/m	3 A/m	Power frequency magnetic fields should be at levels characteristic of a typical commercial or hospital environment.
NOTE: U_T is the AC mains voltage, prior to application of the test level.			

Immunity test	IEC 60601 test level	Compliance level	Electromagnetic environment guidance
Conducted RF IEC 61000-4-6	3Vrms 150 kHz to 80MHz	0.01V	Portable and mobile RF communications equipment should be used no closer to any part of the Ultrasound System, including cables, than the recommended separation distance. This is calculated using the equation applicable to the frequency of the transmitter. **Recommended separation distance** $d = [\frac{3,5}{V_1}]\sqrt{p}$ $d = [\frac{3,5}{E_1}]\sqrt{p}$ 80MHz a 800MHZ $d = [\frac{7}{E_1}]\sqrt{p}$ 800MHz a 2,5GHz
Radiated RF IEC 61000-4-3	3 V/m 80MHz to 2.5GHz	3V/m	Where P is the transmitter's maximum output power rating in watts (W) according to the transmitter's manufacturer, and d is the recommended separation distance in meters (m). Field strengths from fixed RF transmitters, as determined by an electromagnetic site survey, [a] should be less than the compliance level in each frequency range. [b] Interference may occur in the vicinity of equipment marked with the following symbol:

NOTE 1) At 80MHz and 800MHz, the higher frequency range applies.
NOTE 2) These guidelines may not apply in all situations. Electromagnetic propagation is affected by absorption and reflection from structures, objects and people.

[a] Field strengths from fixed transmitters, such as base stations for radio, (cellular/cordless) telephones and land mobile radios, amateur radio, AM and FM radio broadcasts and TV broadcasts cannot be predicted with accuracy. To assess the electromagnetic environment due to fixed RF transmitters, an electromagnetic site survey should be considered. If the measured field strength, in the location in which the Ultrasound System is used, exceeds the applicable RF compliance level above, the Ultrasound System should be observed to verify normal operation. If abnormal performance is observed, additional measures may be necessary, such as reorienting or relocating the Ultrasound System or using a shielded location with a higher RF shielding effectiveness and filter attenuation.
[b] Over the frequency range 150kHz to 80MHz, field strengths should be less than $\mathbf{V_1}$ V/m.

Recommended separation distances between portable and mobile RF communications equipment and ACCUVIX A30

This product is intended for use in an electromagnetic environment, in which radiated RF disturbances are controlled. The customer or the user of this product can help prevent electromagnetic interference by maintaining a minimum distance between portable and mobile RF communications equipment (transmitters) and this product. These distances are recommended below, according to the maximum output power of the communications equipment.

Rated maximum output power of transmitter [W]	Separation distance, according to frequency of transmitter [m]		
	150kHz to 80MHz $d = [\frac{3,5}{V_1}]\sqrt{p}$	80MHz to 800MHz $d = [\frac{3,5}{E_1}]\sqrt{p}$	800MHz to 2.5GHz $d = [\frac{7}{E_1}]\sqrt{p}$
	V1=0.01Vrms	E1=3V/m	E1=3V/m
0.01	35.00	0.11	0.23
0.1	110.68	0.36	0.73
1	350.00	1.16	2.33
10	1106.80	3.68	7.37
100	3500.00	11.66	23.33

For transmitters rated at a maximum output power not listed above, the recommended separation distance *d* in meters (m) can be estimated using the equation applicable to the frequency of the transmitter, where *p* is the maximum output power rating of the transmitter in watts (W), according to the transmitter's manufacturer.

NOTE 1) At 80MHz and 800MHz, the separation distance for the higher frequency range applies.
NOTE 2) These guidelines may not apply in all situations. Electromagnetic propagation is affected by absorption and reflection from structures, objects and people.

Electromagnetic Environment – Guidance

The Ultrasound System must only be used in a shielded location with a minimum RF shielding effectiveness, and each cable should also be connected and used within the shielded location. Field strengths outside the shielded location from fixed RF transmitters, as determined by an electromagnetic site survey, should be less than 3V/m.

It is essential that the actual shielding effectiveness and filter attenuation of the shielded location be verified to assure that they meet the minimum specification.

CAUTION: If the system is connected to other customer-supplied equipment, such as a local area network (LAN) or a remote printer, Samsung Medison cannot guarantee that the remote equipment will work correctly in the presence of electromagnetic phenomena.

Avoiding Electromagnetic Interference

Typical interference on ultrasound imaging systems varies depending on electromagnetic phenomena. Please refer to the following table:

Imaging Mode	ESD[1]	RF[2]	Power Line[3]
2D	Change of operating mode, system settings, or system reset. Brief flashes in the displayed or recorded image.	For sector imaging probes, white radial bands or flashes in the centerlines of the image. For linear imaging probes, white vertical bands, sometimes more pronounced on the sides of the image.	White dots, dashes, diagonal lines, or diagonal lines near the center of the image.
M		Increase in the image background noise or white M mode lines.	White dots, dashes, diagonal lines, or increase in image background noise.
Color		Color flashes, radial or vertical bands, increase in background noise, or changes in color image.	Color flashes, dots, dashes, or changes in the color noise level.
Doppler		Horizontal lines in the spectral display or tones, abnormal noise in the audio, or both.	Vertical lines in the spectral display, popping type noises in the audio, or both.

1. ESD caused by discharging of electric charge build-up on insulated surfaces or persons.
2. RF energy from RF transmitting equipment such as portable phones, hand-held radios, wireless devices, commercial radio and TV, and so on.
3. Conducted interference on power lines or connected cables caused by other equipment, such as switching power supplies, electrical controls, and natural phenomena such as lightning.

A medical device can either generate or receive electromagnetic interference. The EMC standards describe tests for both emitted and received interference.

Samsung Medison ultrasound systems do not generate interference in excess of the referenced standards.

The Ultrasound System is designed to receive signals at radio frequency and is therefore susceptible to interference generated by RF energy sources. Examples of other sources of interference are medical devices, information technology products, and radio and television transmission towers. Tracing the source of radiated interference can be a difficult task. Customers should consider the following in an attempt to locate the source:

- Is the interference intermittent or constant?
- Does the interference show up only with one transducer operating at the same frequency or with several transducers?
- Do two different transducers operating at the same frequency have the same problem?
- Is the interference present if the system is moved to a different location in the facility?

The answers to these questions will help determine if the problem resides with the system or the scanning environment. After you answer this question, contact your local Samsung Medison customer service representative.

Mechanical Safety

Moving the Equipment

WARNING: The product weighs more than 100kg. Be extra careful when transporting it. Careless transportation of the product may result in product damage or personal injury.

- Before transporting the product, check that the wheel brakes are unlocked. Also, make sure to retract the monitor arm completely, so that it is secured in a stationary position.
- Always use the handles at the back of the console and move the product slowly.

This product is designed to resist shocks. However, excessive shock, for example – if the product falls over, may cause serious damage.

If the system operates abnormally after being repositioned, please contact Samsung Medison customer service department.

The Brakes

You can use the brakes to control the movement of the product. The front wheel brakes are on the center of the consol pedal and the back wheel brakes are on the top of each wheel. The brakes at the front can help you to control the two front wheels simultaneously, using the pedal.

- ▶ The front wheel brakes: To lock the brakes, press the front part of the brake with your foot. To unlock the brakes, press the back of the pedal.
- ▶ To lock the brakes, press the bottom part of the brake with your foot. To unlock them, press the part labeled OFF at the top of the brake with your foot.

We recommend that you lock the brakes when using the product.

Precautions on Ramps

Always make sure that the control panel is facing the direction of movement.

WARNING: Be aware of the castors, especially when moving the system. Samsung Medison recommends that you exercise caution when moving the product up or down ramps.

When moving the product down a ramp or resting it temporarily on a ramp, the product may tilt over even with the brakes on depending on the direction the product is facing. Do not leave the product on ramps.

Safety Notes

CAUTION:

- Do not press the control panel excessively.
- Never attempt to modify the product in any way.
- Check the operational safety when using the product after a prolonged break in service.
- Make sure that other objects, such as metal pieces, do not enter the system.
- Do not block the ventilation slots.
- Do not pull on the power cord to unplug it. Doing so can damage the cord and cause short-circuiting and cord snapping. Always unplug by pulling on the plug itself.
- Excessive bending or twisting of cables, on parts that are applied to the patient, may cause failure or intermittent operation of the system.
- Improper cleaning or sterilization, of parts that are applied to the patient, may cause permanent damage.
- Servicing the product, including repairs and replacement of parts, must be done by qualified Samsung Medison service personnel . Assuming that the product is used in accordance with the guidelines contained in this manual and maintained by qualified service personnel, the expected lifespan of the product is approximately 7 years.

For detailed information on cleaning and disinfecting the product, refer to “Chapter 8. Maintenance”.

Monitor Safety Note

When adjusting the height or position of the monitor, be careful of the space in the middle of the monitor arm. Having your fingers, or other body parts, caught in it may result in injury.

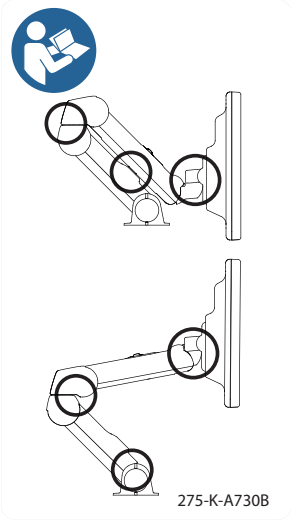

[Figure 1.2 Monitor Safety Note]

Control Panel Caution

CAUTION:

- Do not press on the control panel with excessive force or lean against it.
- Do not sit on the control panel or apply too much pressure to it.

When adjusting the control panel's height or position, be mindful of the space between the panel and the lift. Having your fingers, or other body parts, caught in it may result in injury.

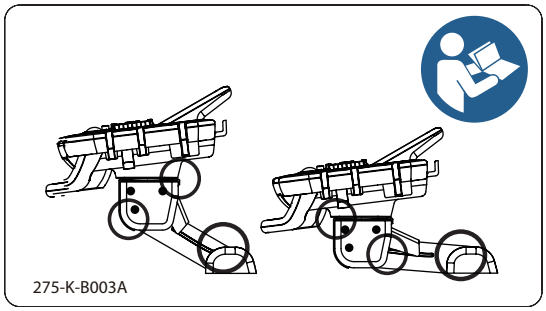

[Figure 1.3 Control Panel Caution]

Biological Safety

For safety instructions concerning probes and biopsies, refer to "Chapter 9. Probes".

WARNING:

- Ultrasound waves may have damaging effects on cells and, therefore, may be harmful to the patient. If there is no medical benefit, minimize the exposure time and maintain the ultrasound wave output level at low. Please refer to the ALARA principle.
- Do not use the system if an error message appears on the video display indicating that a hazardous condition exists. Note the error code, turn off the power to the system, and call Samsung Medison customer service department.
- Do not use a system that exhibits erratic or inconsistent functioning. Discontinuities in the scanning sequence are indicative of a hardware failure that should be corrected before use.
- The system limits the maximum contact temperature to 43 degrees Celsius, and the ultrasonic wave output observes American FDA regulations.

ALARA Principle

Guidance for the use of diagnostic ultrasound is defined by the "**A**s **L**ow **A**s **R**easonably **A**chievable" (ALARA) principle. The decision as to what is reasonable has been left to the judgment and insight of qualified personnel. No set of rules can be formulated that would be sufficiently complete to dictate the correct response to every circumstance. By keeping ultrasound exposure as low as possible, while obtaining diagnostic images, users can minimize ultrasonic bioeffects.

Since the threshold for diagnostic ultrasound bioeffects is undetermined, it is the sonographer's responsibility to control the total energy transmitted into the patient. The sonographer must reconcile exposure time with diagnostic image quality. To ensure diagnostic image quality and limit exposure time, the Ultrasound System provides controls that can be manipulated during the exam to optimize the results.

The ability of the user to abide by the ALARA principle is important. Advances in diagnostic ultrasound, not only in the technology but also in its applications, have resulted in the need for increased and improved information to guide the user. The output indices are designed to provide that important information.

There are a number of variables, which affect the way in which the output display indices can be used to implement the ALARA principle. These variables include mass, body size, location of the bone relative to the focal point, attenuation in the body, and ultrasound exposure time. Exposure time is an especially useful variable, because the user controls it. The ability to limit the index values over time supports the ALARA principle.

Applying ALARA

The system imaging mode used depends upon the information needed. 2D-mode and M-mode imaging provide anatomical information, while Doppler, Power, and Color imaging provide information about blood flow. Scanned modes, like 2D-mode, Power, or Color, disperse or scatter the ultrasonic energy over an area, while an unscanned mode, like M-mode or Doppler, concentrate the ultrasonic energy. Understanding the nature of the imaging mode being used allows the sonographer to apply the ALARA principle with informed judgment. The probe frequency, system set-up values, scanning techniques, and operator experience aid the sonographer in meeting the ALARA principle. The decision as to the amount of acoustic output is, in the final analysis, up to the system operator. This decision must be based on the following factors: type of patient, type of exam, patient history, ease or difficulty of obtaining diagnostically useful information, and the potential localized heating of the patient due to probe surface temperatures. Prudent use of the system occurs when patient exposure is limited to the lowest index reading for the shortest amount of time necessary to achieve acceptable diagnostic results.

Although a high index reading does not mean that a biological effect is actually occurring, it should be taken seriously. Every effort should be made to reduce the possible effects of a high index reading. Limiting exposure time is an effective way to accomplish this goal.

There are several system controls that the operator can use to adjust the image quality and limit the acoustic intensity. These controls are related to the techniques that an operator might use to implement ALARA and can be divided into three categories: direct, indirect, and receiver control.

Direct Controls

Application selection and the output intensity control directly affect acoustic intensity. There are different ranges of allowable intensity or output depending on your selection. Selecting the correct range of acoustic intensity for the application is one of the first things required during any exam. For example, peripheral vascular intensity levels are not recommended for fetal exams. Some systems automatically select the proper range for a particular procedure, while others require manual selection. Ultimately, the user bears the responsibility for proper clinical use. Samsung Medison systems provide both automatic and user-definable settings.

Output has direct impact on acoustic intensity. Once the application has been established, the output control can be used to increase or decrease the output intensity. The output control allows you to select intensity levels less than the defined maximum. Prudent use dictates that you select the lowest output intensity consistent with good image quality.

Indirect Controls

The indirect controls are those that have an indirect effect on acoustic intensity. These controls affect imaging mode, pulse repetition frequency, focus depth, pulse length, and probe selection.

The choice of imaging mode determines the nature of the ultrasound beam. 2D-mode is a scanning mode, Doppler is a stationary or unscanned mode. A stationary ultrasound beam concentrates energy on a single location. A moving or scanned ultrasound beam disperses the energy over a wide area and the beam is only concentrated on a given area for a fraction of the time that is necessary in unscanned mode.

Pulse repetition frequency or rate refers to the number of ultrasound bursts of energy over a specific period of time. The higher the pulse repetition frequency, the more pulses of energy in a given period of time. Several controls affect pulse repetition frequency: focal depth, display depth, sample volume depth, color sensitivity, number of focal zones, and sector width controls.

The focus of the ultrasound beam affects the image resolution. To maintain or increase resolution at a different focus requires a variation of output over the focal zone. This variation of output is a function of system optimization. Different exams require different focal depths. Setting the focus to the proper depth improves the resolution of the structure of interest.

Pulse length is the time during which the ultrasonic burst is turned on. The longer the pulse, the greater the time-average intensity value. The greater the time-average intensity, the greater the likelihood of temperature increase and cavitations. Pulse length, burst length or pulse duration is the output pulse duration in pulsed Doppler. Increasing the Doppler sample volume, increases the pulse length.

Probe selection affects intensity indirectly. Tissue attenuation changes with frequency. The higher the probe operating frequency, the greater the attenuation of the ultrasonic energy. Higher probe operating frequencies require higher output intensity to scan at an increased depth. To scan deeper at the same output intensity, a lower probe frequency is required. Using more gain and output beyond a point, without corresponding increases in image quality, can mean that a lower frequency probe is needed.

Receiver Controls

Receiver controls are used by the operator to improve image quality. These controls have no effect on output. Receiver controls only affect how the ultrasound echo is received. These controls include **gain**, **TGC**, **dynamic range**, and **image processing**. The important thing to remember, relative to output, is that receiver controls should be optimized before increasing output. For example; before increasing output, optimize gain to improve image quality.

Additional Considerations

Ensure that scanning time is kept to a minimum, and ensure that only medically required scanning is performed. Never compromise quality by rushing through an exam. A poor exam will require a follow-up, which ultimately increases the scanning time. Diagnostic ultrasound is an important tool in medicine, and, like any tool, should be used efficiently and effectively.

Output Display Features

The system output display comprises two basic indices: a mechanical index and a thermal index. The thermal index consists of the following indices: soft tissue (TIs), bone (TIb) and cranial bone (TIc). One of these three thermal indices will be displayed at all times. Which one depends upon the system's default setting or user choice, depending upon the application at hand.

The mechanical index is continuously displayed over the range of 0.0 to 1.9, in increments of 0.1. The thermal index consists of the three indices, and only one of these is displayed at any one time. Each probe application has a default selection that is appropriate for that combination. The TIb or TIs is continuously displayed over the range of 0.0 to the maximum output, based on the probe and application, in increments of 0.1.

The application-specific nature of the default setting is also an important factor of index behavior. The default setting is a system control state, which is preset by the manufacturer or the operator. The system has default index settings for the probe application. The default settings are invoked automatically by the Ultrasound System when power is turned on, new patient data is entered into the system database, or a change in application takes place. The decision as to which of the three thermal indices to display should be based on the following criteria:

Appropriate index for the application: TIs is used for imaging soft tissue; and TIb for a focus at or near bone.Some factors might create artificially high or low thermal index readings, e.g. the presence of fluid or bone, or the flow of blood. A highly attenuated tissue path, for example, will cause the potential for local zone heating to be less than the thermal index displays.

Scanned modes versus unscanned modes of operation affect the thermal index. For scanned modes, heating tends to be near the surface; for unscanned modes, the potential for heating tends to be deeper in the focal zone.

Always limit ultrasound exposure time but do not rush the exam. Ensure that the indices are kept to a minimum and that exposure time is limited without compromising diagnostic sensitivity.

Mechanical Index (MI) Display

Mechanical bioeffects are threshold phenomena that occur when a certain level of output is exceeded. The threshold level varies, however, with the type of tissue. The potential for mechanical biological effects varies with peak pressure and ultrasound frequency. The MI accounts for these two factors. The higher the MI value, the greater the likelihood of mechanical bioeffects occurring. However, there is no specific MI value that means that a mechanical bioeffect will actually occur. The MI should be used as a guide for implementing the ALARA principle.

Thermal Index (TI) Display

The TI informs the user about the potential for temperature increase occuring at the body surface, within body tissue, or at the point of focus of the ultrasound beam on bone. The TI is an estimate of the temperature increase in specific body tissues. The actual amount of any temperature rise is influenced by factors such as tissue type, vascularity, mode of operation, etc. The TI should be used as a guide for implementing the ALARA principle.

The bone thermal index (TIb) informs the user about potential heating at or near the focus, after the ultrasound beam has passed through soft tissue or fluid, for example, at or near second or third trimester fetal bone.

The cranial bone thermal index (TIc) informs the user about the potential heating of bone at or near the surface of, for example, cranial bone. TIc is displayed when you select a trans-cranial application.

The soft tissue thermal index (TIs) informs the user about the potential for heating within soft homogeneous tissue.

You can select TI Display in **Utility** > **Setup** > **Display** > **Display**.

Precision and Accuracy of Mechanical and Thermal Indices Displays

The mechanical and thermal indices on the system are precise to 0.1 units.

The MI and TI display accuracy estimates for the system are given in the Acoustic Output Tables Manual. These accuracy estimates are based on the various range of probes and systems, inherent acoustic output modeling errors, and measurement variation, as described below.

The displayed values should be interpreted as relative information to help the system operator achieve the ALARA principle through prudent use of the system. The values should not be interpreted as actual physical values from investigated tissue or organs. The initial data that is used to support the output display is derived from laboratory measurements based on the AIUM measurement standard. The measurements are then put into algorithms for calculating the displayed output values.

Many of the assumptions used in the process of measurement and calculation are conservative in nature. Over-estimation of actual *in situ* exposure, for the vast majority of tissue paths, is built into the measurement and calculation process. For example, the measured water tank values are derated using a conservative, industry standard, attenuation coefficient of 0.3dB/cm-MHz.

Conservative values for tissue characteristics were selected for use in the TI models. Conservative values for tissue or bone absorption rates, blood perfusion rates, blood heat capacity, and tissue thermal conductivity were selected.

A steady state temperature rise is assumed in the industry standard TI models, and the assumption is made that the ultrasound probe is held steady in one position long enough for a steady state to be reached.

A number of factors are considered when estimating the accuracy of display values: hardware variations, algorithm accuracy estimation and measurement variation. Variation among probes and systems is a significant factor. Probe variation results from piezoelectric crystal efficiencies, process-related impedance differences, and sensitive lens focusing parameter variations. Differences in the system pulse voltage control and efficiencies are also a contributor to variability. There are inherent uncertainties in the algorithms used for estimating acoustic output values over the range of possible system operating conditions and pulse voltages. Inaccuracies in laboratory measurements are related to differences in hydrophone calibration and performance, positioning, alignment and digitization tolerances, as well as variation among test operators.

The conservative assumptions of the output estimation algorithms of linear propagation, at all depths, through a 0.3dB/cm-MHz attenuated medium are not taken into account in calculation of the accuracy estimate displayed. Neither linear propagation, nor uniform attenuation at the 0.3dB/cm-MHz rate, occur in water tank measurements or in most tissue paths in the body. In the body, different tissues and organs have dissimilar attenuation characteristics. In water, there is almost no attenuation. In the body, and particularly in water tank measurements, non-linear propagation and saturation losses occur as pulse voltages increase.

The display accuracy estimates take into account the varying ranges of probes and systems, inherent acoustic output modeling errors, and measurement variations. Display accuracy estimates are not based on errors in, or caused by measuring according to, the AIUM measurement standards. They are also independent of the effects of non-linear loss on the measured values.

Control Effects – Control Affecting the Indices

As various system controls are adjusted, the TI and MI values may change. This will be most apparent as the POWER control is adjusted; however, other system controls will affect the on-screen output values.

Power

Power controls the system acoustic output. Two real-time output values are on the screen: a TI and an MI. They change as the system responds to POWER adjustments.

In combined modes, such as simultaneous Color, 2D-mode and pulsed Doppler, the individual modes each add to the total TI. One mode will be the dominant contributor to this total. The displayed MI will be from the mode with the largest peak pressure.

2D-mode Controls

2D-Mode Size

Narrowing the sector angle may increase the frame rate. This action will increase the TI. Pulse voltage may be automatically adjusted down via software controls to keep the TI below the system maximums. A decrease in pulse voltage will decrease the MI.

Zoom

Increasing the zoom magnification may increase the frame rate. This action will increase the TI. The number of focal zones may also increase automatically to improve resolution. This action may change the MI, since the peak intensity can occur at a different depth.

Persistence

A lower persistence will decrease the TI. Pulse voltage may be automatically increased. An increase in pulse voltage will increase the MI.

Focal No.

More focal zones may change both the TI and MI by changing the frame rate or focal depth automatically. Lower frame rates decrease the TI. The MI displayed will correspond to the zone with the largest peak intensity.

Focus

Changing the focal depth will change the MI. Generally, higher MI values will occur when the focal depth is near the natural focus of the transducer.

Color and Power Controls

Color Sensitivity

Increasing the color sensitivity may increase the TI. More time is spent scanning for color images. Color pulses are the dominant pulse type in this mode.

Color Sector Width

Narrower color sector width will increase color frame rate and the TI will increase. The system may automatically decrease pulse voltage to stay below the system maximum. A decrease in pulse voltage will decrease the MI. If pulsed Doppler is also enabled, then pulsed Doppler will remain as the primary mode and the TI change will be small.

Color Sector Depth

Deeper color sector depth may automatically decrease color frame rate or change color focal zone or color pulse length. The TI will change due to the combination of these effects. Generally, the TI will decrease with increased color sector depth. MI will correspond to the peak intensity of the dominant pulse type, which is a color pulse. However, if pulsed Doppler is also enabled then pulsed Doppler will remain the dominant mode and the TI change will be small.

Scale

Using the SCALE control to increase the color velocity range may increase the TI. The system will automatically adjust pulse voltage to stay below the system maximums. A decrease in pulse voltage will also decrease MI.

Sec Width

A narrower 2D-mode sector width in Color imaging will increase the color frame rate. The TI will increase and the MI will not change. If pulsed Doppler is also enabled, then pulsed Doppler will remain as the primary mode and the TI change will be small.

M-mode and Doppler Controls

Speed

M-mode and Doppler sweep speed adjustments will not affect the MI. When M-mode sweep speed changes, the TI changes.

Simultaneous and Update Methods

Use of combination modes affects both the TI and MI through the combination of pulse types. During simultaneous mode, the TI is additive. During auto-update and duplex, the TI will display the dominant pulse type. The displayed MI will be from the mode with the largest peak pressure.

Sample Volume Depth

When Doppler sample volume depth is increased, the Doppler PRF may automatically decrease. A decrease in PRF will decrease the TI. The system may also automatically decrease the pulse voltage to remain below the system maximum. A decrease in pulse voltage will decrease the MI.

Doppler, CW, M-mode, and Color Imaging Controls

When a new imaging mode is selected, both the TI and the MI will change to default settings. Each mode has a corresponding pulse repetition frequency and maximum intensity point. In combined or simultaneous modes, the TI is the sum of the contribution from the modes enabled and the MI is for the focal zone and mode with the largest derated intensity. If a mode is turned off and then reselected, the system will return to the previously selected settings.

Probe

Each probe model available has unique specifications for contact area, beam shape, and center frequency. Defaults are initialized when you select a probe. Factory defaults vary with probe, application, and selected mode. Defaults have been chosen below the FDA limits for intended use.

Depth

An increase in 2D-mode depth will automatically decrease the 2D-mode frame rate. This would decrease the TI. The system may also automatically choose a deeper 2D-mode focal depth. A change of focal depth may change the MI. The MI displayed is that of the zone with the largest peak intensity.

Application

Acoustic output defaults are set when you select an application. Factory defaults vary with probe, application, and mode. Defaults have been chosen below the FDA limits for intended use.

Related Guidance Documents

For more information about ultrasonic bioeffects and related topics refer to the following:

- AIUM Report, 28th January, 1993, "Bioeffects and Safety of Diagnostic Ultrasound".
- Bioeffect Considerations for the Safety of Diagnostic Ultrasound, J Ultrasound Med., Sept. 1998: 1998: Vol. 7, No. 9 Supplement.
- Acoustic Output Measurement Standard for Diagnostic Ultrasound Equipment. (AIUM, NEMA. 1998).
- Acoustic Output Labeling Standard for Diagnostic Ultrasound Equipment (AIUM, 1998).
- Second Edition of the AIUM Output Display Standard Brochure, Dated 10th March, 1994. (A copy of this document is shipped with each system.)
- Information for Manufacturer Seeking Marketing Clearance of Diagnostic Ultrasound Systems and Transducers. FDA. September 1997.
- Standard for Real-Time Display of Thermal and Mechanical Acoustic Output Indices on Diagnostic Ultrasound Equipment. (Revision 1, AIUM, NEMA., 1998)
- WFUMB. Symposium on Safety of Ultrasound in Medicine: Conclusions and Recommendations on Thermal and Non-Thermal Mechanisms for Biological Effects of Ultrasound, Ultrasound in Medicine and Biology, 1998: Vol. 24, Supplement 1.

Acoustic Output and Measurement

Since the first usage of diagnostic ultrasound, the possible human biological effects (bioeffects) of ultrasound exposure have been studied by various scientific and medical institutions. In October 1987, the American Institute of Ultrasound in Medicine (AIUM) ratified a report prepared by its Bioeffects Committee (Bioeffect Considerations for the Safety of Diagnostic Ultrasound, J Ultrasound Med., Sept. 1988: Vol. 7, No. 9 Supplement), sometimes referred to as the Stowe Report, which reviewed available data on possible effects of ultrasound exposure. Another report, "Bioeffects and Safety of Diagnostic Ultrasound," dated 28th January, 1993, provides more up to date information.

The acoustic output for this system has been measured and calculated in accordance with the December 1985 "510(K) Guide for Measuring and Reporting Acoustic Output of Diagnostic Ultrasound Medical Devices," except that the hydrophone meets the requirements of "Acoustic Output Measurement Standard for Diagnostic Ultrasound Equipment" (NEMA UD 2-1992).

In Situ, Derated, and Water Value Intensities

All intensity parameters are measured in water. Since water does not absorb acoustic energy, these water measurements represent a worst case value. Biological tissue does absorb acoustic energy. The true value of the intensity at any point depends on the amount and type of tissue and the frequency of the ultrasound that passes through the tissue. The intensity value in the tissue, *In Situ*, has been estimated using the following formula:

In Situ = Water [$e^{-(0,23\ alf)}$]

Where: *In Situ* = *In Situ* Intensity Value

Water = Water Value Intensity

e = 2.7183

a = Attenuation Factor

Tissue	a (dB/cm-MHz)
Brain	.53
Heart	.66
Kidney	.79
Liver	.43
Muscle	.55

l = skin line to measurement depth (cm)

f = Center frequency of the transducer/system/mode combination (MHz)

Since the ultrasonic path during an examination is likely to pass through varying lengths and types of tissue, it is difficult to estimate the true *In Situ* intensity. An attenuation factor of 0.3 is used for general reporting purposes. Therefore, the *In Situ* value which is commonly reported uses the formula:

In Situ (derated) = Water [$e^{-(0,069\ lf)}$]

Since this value is not the true *In Situ* intensity, the term "derated" is used.

The maximum derated and the maximum water values do not always occur at the same operating condition. Therefore, the reported maximum water and derated values may not be related to the *In Situ* (derated) formula. For example, a multi-zone array transducer that has maximum water value intensities in its deepest zone: the same transducer may have its largest derated intensity in one if its shallowest focal zones.

Acoustic Output and Measurement

The terms and symbols used in the acoustic output tables are defined in the following paragraphs.

ISPTA.3 The **derated spatial-peak temporal-average intensity** (milliwatts per square centimeter).

ISPPA.3 The derated spatial-peak pulse-average intensity (watts per square centimeter). The value of IPA.3 at the position of global maximum MI (IPA.3@MI) may be reported instead of ISPPA.3 if the global maximum MI is reported.

MI The Mechanical Index. The value of MI at the position of ISPPA.3, (MI@ISPPA.3) may be reported instead of MI (global maximum value) if ISPPA.3 is 190W/cm2.

Pr.3 The derated peak rarefactional pressure (megapascals) associated with the transmit pattern, giving rise to the reported MI value.

WO The ultrasonic power (milliwatts). For the operating condition giving rise to ISPTA.3, WO is the total **time-average power**; For operating conditions subject to reporting under ISPPA.3, WO is the **ultrasonic power** associated with the transmit pattern, giving rise to the value reported under ISPPA.3

Fc The center frequency (MHz). For MI and ISPPA.3, Fc is the center frequency associated with the transmit pattern, giving rise to the global maximum value of the respective parameter. For ISPTA.3, for combined modes involving beam types of unequal center frequency, Fc is defined as the overall ranges of center frequencies of the respective transmit patterns.

ZSP The axial distance at which the reported parameter is measured (centimeters).

x-6,y-6 These are respectively the in-plane (azimuth) and out-of-plane (elevation) -6 dimensions in the x-y plane where ZSP is found (centimeters).

PD The pulse duration (microseconds) associated with the transmit pattern, giving rise to the reported value of the respective parameter.

PRF The pulse repetition frequency (Hz) associated with the transmit pattern, giving rise to the reported value of the respective parameter.

EBD The entrance beam dimensions for the azimuth and elevation planes (centimeters).

EDS The entrance dimensions of the scan for the azimuth and elevation planes (centimeters).

Acoustic Measurement Precision and Uncertainty

The Acoustic Measurement Precision and Acoustic Measurement Uncertainty are described below.

Quantity	Precision	Total Uncertainty
PII.3 (derated pulse intensity integral)	3.2 %	+21 % to -24 %
WO (acoustic power)	6.2 %	+/- 19 %
Pr.3 (derated rarefaction pressure)	5.4 %	+/- 15 %
Fc (center frequency)	< 1 %	+/- 4.5 %

■ Systematic Uncertainties – for the pulse intensity integral, derated rarefaction pressure, Pr.3

■ Center frequency and pulse duration, the analysis includes considerations of the effects on accuracy of:

Hydrophone calibration drift or errors.

Hydrophone / Amp frequency response.

Spatial averaging.

Alignment errors.

Voltage measurement accuracy, including:

- Oscilloscope vertical accuracy.
- Oscilloscope offset accuracy.
- Oscilloscope clock accuracy.
- Oscilloscope digitization rates.
- Noise.

The systematic uncertainties of acoustic power measurements using a radiation force are measured through the use of calibrated NIST acoustic power sources.

We also refer to a September 1993 analysis done by a working group of the IEC technical committee 87 and prepared by K. Beissner, as a first supplement to IEC publication 1161.

The document includes analysis and discussion of the sources of error/measurement effects due to:

- Balance system calibration.
- Absorbing (or reflecting) target suspension mechanisms.
- Linearity of the balance system.
- Extrapolation to the moment of switching the ultrasonic transducer (compensation for ringing and thermal drift).
- Target imperfections.
- Absorbing (or reflecting) target geometry and finite target size.
- Target misalignment.
- Ultrasonic transducer misalignment.
- Water temperature.
- Ultrasonic attenuation and acoustic streaming.
- Coupling or shielding foil properties.
- Plane-wave assumption.
- Environmental influences.
- Excitation voltage measurement.
- Ultrasonic transducer temperature.
- Effects due to non-linear propagation and saturation loss.

The overall findings of the analysis give a rough Acoustic Power accuracy figure of +/-10% for the frequency range of 1 - 10 MHz.

Training

The users of this ultrasound system must familiarize themselves with the ultrasound system to optimize the performance of the device and to detect possible malfunctions. It is recommended that all users receive proper training before using the device. You can receive training on the use of the product from the Samsung Medison service department, or any of the customer support centers worldwide.

Environmental Protection

CAUTION:

- For disposing of the system or accessories that have come to the end of their lifespan, contact the vendor or follow appropriate disposal procedures.
- You are responsible for complying with the relevant regulations for disposing of wastes.
- The lithium ion battery used in the product must be replaced by a Samsung Medison service engineer or an authorized dealer.

Correct Disposal of This Product (Waste Electrical & Electronic Equipment)

Applicable in countries with separate collection systems

This marking on the product, accessories or literature indicates that the product and its electronic accessories (e.g. charger, headset, USB cable) should not be disposed of with other household waste at the end of their working life. To prevent possible harm to the environment or human health from uncontrolled waste disposal, please separate these items from other types of waste and recycle them responsibly to promote the sustainable reuse of material resources.

Household users should contact either the retailer where they purchased this product, or their local government office, for details of where and how they can take these items for environmentally safe recycling.

Business users should contact their supplier and check the terms and conditions of the purchase contract. This product and its electronic accessories should not be mixed with other commercial wastes for disposal.

Chapter 2

Introduction

▣ ***Specifications*** 2-3

▣ ***Product Configuration*** 2-5

Monitor.....2-7

Control Panel.....2-9

Console.....2-14

Peripheral Devices.....2-16

Probes.....2-19

Accessories.....2-20

Optional Functions.....2-21

Specifications

Physical Dimensions	Height: 1,415 – 1,760mm (with monitor) Width: 549mm Depth: 1,002 -1,137mm Weight: 111kg (with monitor)
Imaging modes	2D-Mode M-Mode Color Doppler Pulsed Wave (PW) Spectral Doppler Continuous Wave (CW) Doppler Tissue Doppler Imaging (TDI) Tissue Doppler Wave (TDW) Power Doppler (PD) Directional Power Doppler (DPD) Color M-Mode Anatomical M mode 3D imaging mode 4D imaging mode
Gray Scale	256 (8 bits)
Focusing	Transmit focusing, maximum of eight points (four points simultaneously selectable) Digital dynamic receive focusing (continuous)
Probes (Type BF / IPX7)	**Linear Array** L4-7, L5-13IS, L5-13/50, L7-16IS, LS6-15 **Curved Array** C1-4, C2-6IC, CF4-9 (old name: C5-8), EC4-9IS, SC1-6, VR5-9 **Phased Array** P2-4BA **3D** V2-6, V4-8, V5-9 **CW** CW 2.0, CW 4.0, CW 6.0
Probe connections	5 Active Probe Ports (including pencil probe)
Monitor	21.5 inch LCD monitor (LED backlight unit, LED connector) called "LCD monitor" henceforth
ECG	Type BF
Rear Panel Input / Output Connections	Audio in / out Microphone External Trigger in / out External monitor DVI-I Network USB Foot switch

Image Storage	Maximum 12700 frames for CINE memory Maximum 8192 lines for LOOP memory Image filing system
Application	Obstetrics, Gynecology, Urology, Abdomen, Cardiac, Vascular, Small Part, Pediatric, TCD, MSK, Contrast
Electrical Parameters	100-240V~, 1100VA, 50/60Hz or 100-120/200-240V~, 1100VA, 50/60Hz
Measurement Packages	OB, Gynecology, Cardiac, Vascular, Fetal Heart, Urology, Abdomen, Small Parts, Muskuloskeletal, TCD, Pediatric Hips * Refer to Chapter 5 for additional information
Signal Processing (Pre-Processing)	TGC control Mode-independent gain control Acoustic power control (adjustable) Dynamic aperture Dynamic apodization Dynamic range control (adjustable) Image view area control M-mode sweep speed control
Signal Processing (Post-Processing)	Frame average Edge enhancement/blurring Gamma-scale windowing Image orientation (left/right, up/down, and rotation) White on black/black on white Zoom
Measurement	Trackball operation of multiple cursors 2D mode: Linear measurements and area measurements using elliptical approximation or trace M mode: Continuous readout of distance, time, and slope rate Doppler mode: Velocity and trace
Auxiliary	USB Video Printer USB to RS-232 Serial Cable Foot Switch(IPX1) USB Flash Memory Media USB HDD Monitor
User Interface	English, German, French, Spanish, Italian, Russian, Chinese
Pressure Limits	Operating: 700hPa to 1060hPa Storage: 700hPa to 1060hPa
Humidity Limits	Operating: 30% to 75% Storage & Shipping: 20% to 90%
Temperature Limits	Operating: 10°C ~ 35°C Storage & Shipping: -25°C ~ 60°C

Product Configuration

This Product consists of the monitor, the control panel, the console, the peripheral devices, and the probes.

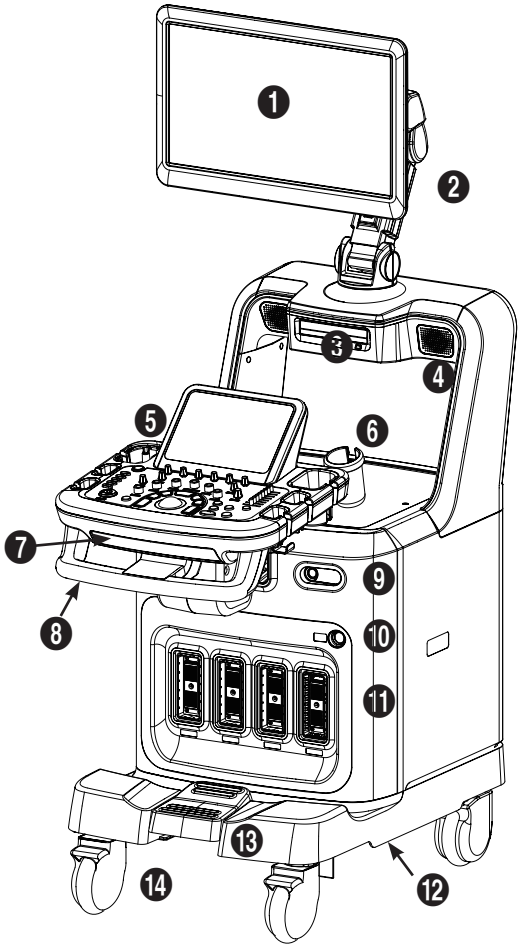

Item	Descriptions
1	Monitor
2	Monitor arm
3	DVD drive
4	Speaker
5	Control panel
6	Probe holder
7	Keyboard
8	Lift
9	ECG port
10	CW probe port
11	Probe port
12	Air filter
13	Brake
14	Wheels

[Figure 2.1 Front of the ACCUVIX A30]

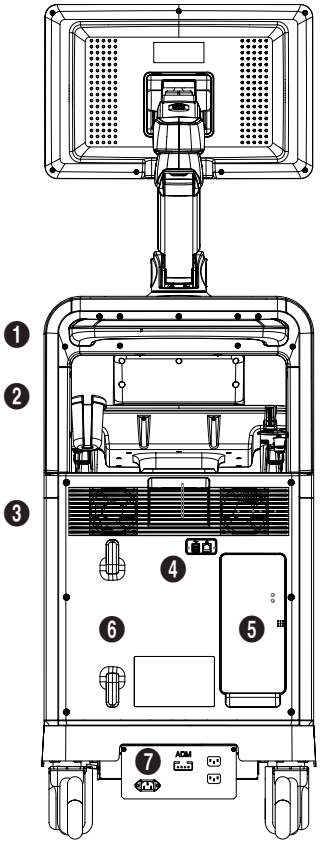

[Figure 2.2 Back of the ACCUVIX A30]

Item	Descriptions
❶	Handle
❷	Storage compartments
❸	Ventilation
❹	USB and LAN ports
❺	Rear panel
❻	Cable holder
❼	Power connection part

Tips!

Principles of Operation

Medical ultrasound images are created by computer and digital memory from the transmission and reception of mechanical high-frequency waves applied through a probe. The mechanical ultrasound waves spread through the body, producing an echo where density changes occur. For example, in the case of tissue, an echo is created where a signal passes from an adipose tissue region to a muscular tissue region. The echoes return to the probe where they are converted back into electrical signals.

These echo signals are highly amplified and processed by analog and digital circuits having filters with many frequency and time response options, transforming the high-frequency electrical signals into a series of digital image signals which are stored in memory. Once in memory, the image can be displayed in real-time on the image monitor. All signal transmission, reception and processing characteristics are controlled by computer.

Monitor

Ultrasound images and other information are displayed on the color LCD monitor.

Screen Layout

The monitor displays ultrasound images, operation menus and a variety of other information. The screen consists mainly of ❶ Title Area, ❷ Preview Area, ❸ Image Area, ❹ Thumbnail Area, and ❺ User Information.

[Figure 2.3 Monitor Display]

Title Area

Displays patient name, hospital name, application, frame rate and depth, probe information, acoustic output information, and date and time.

Preview Area

Displays the selected thumbnail image. EZ Exam's menu will also appear if being used.

Image Area

Displays ultrasound images. TGC, image information, annotation, and measurement information are also displayed.

Thumbnail Area

Up to five saved images are displayed. (Save by pressing the **Save** button.) Pressing Quad icon displays up to 16 saved images. Click a thumbnail to enlarge.

User Information Area

The user information area provides a variety of information necessary for system use. Information such as current system status, image information, selectable items, etc. are displayed.

Control Panel

The system can be controlled by using the control panel.

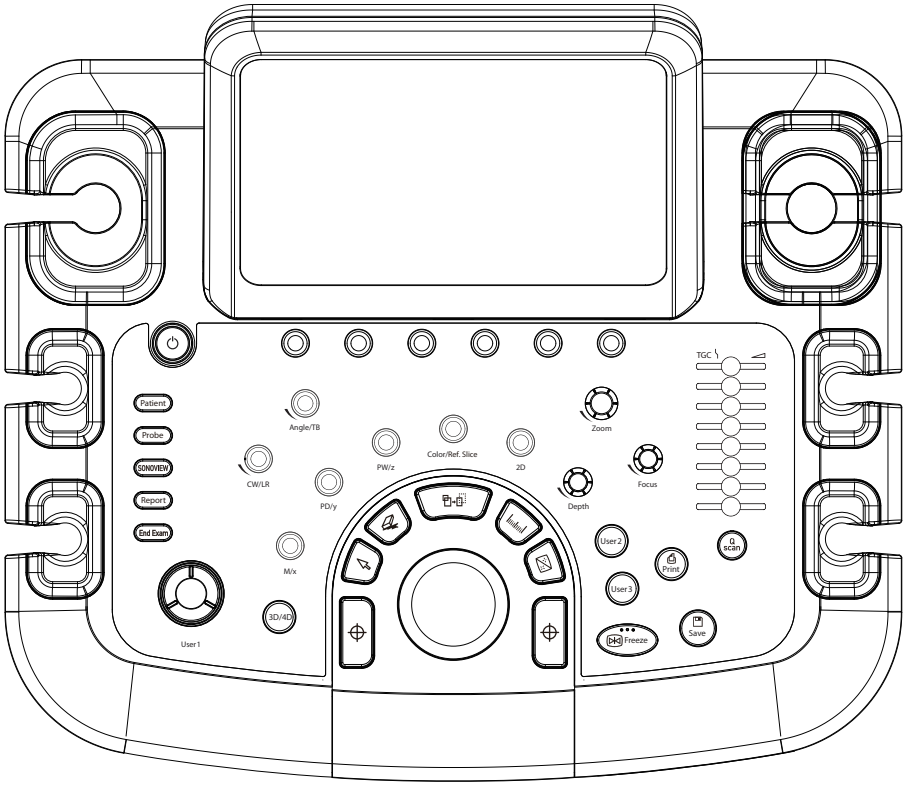

[Figure 2.4 Control Panel]

The control panel consists of a keyboard, soft menus, buttons, dials, dial-buttons, a slider, and a trackball.

The dial-button can be used both as a dial and a button.

Functions of the Control Panel

The following are the descriptions and instructions for the controls on the control panel. For more information on controls with multiple functions, see Chapter 3 onwards in this manual.

On/Off	Button	Turns the system on/off.
Patient	Button	Displays the *Patient Information* screen for patient selection and information entry.
Probe	Button	Displays the *Probe* screen, which allows you to select or change probes and diagnosis items.
SONOVIEW	Button	Runs SONOVIEW - the image filing program.
Report	Button	Displays the Report screen that shows the measurement results of the current application and other information.
End Exam	Button	Finishes the exam of the currently selected patient and resets the related data.
2D	Dial-button	Button: Press this dial-button to start 2D mode. Dial: Adjusts the 2D gain.
M / x	Dial-button	Button: Press this dial-button to start/stop M mode. Dial: Adjusts the M gain. Also, turning this dial-button when in 3D View, rotates the image along the x-axis.
PD / y	Dial-button	Button: Press this dial-button to start/stop Power Doppler mode Dial: Adjusts the PW gain. Also, turning this dial-button, when in 3D View, rotates the image along the y-axis.
PW / z	Dial-button	Button: Press this dial-button to start/stop PW Spectral Doppler mode. Dial: Adjusts the PD gain. Also, turning this dial-button, when in 3D View, rotates the image along the z-axis.
Color/Ref. Slice	Dial-button	Button: Press this dial-button to start/stop Color Doppler mode. Dial: Adjusts the C gain. Moves the reference slice horizontally in the 3D View.
3D/4D	Button	Starts or ends 3D/4D mode.
CW/LR	Dial-button	Button: Press this dial-button to start/stop CW Spectral Doppler mode. Dial: Adjusts the CW gain. Adjusts left and right margins of ROI in 3D View-MPR. LR is an abbreviation for "Left-Right".
Angle / TB	Dial-button	Button: Adjusts the angle of the sample volume in Spectral Doppler mode. It is also used to adjust the body marker's probe cursor or indicator angle. Dial: Adjusts top and bottom margins of ROI in 3D View-MPR. TB is an abbreviation for "Top-Bottom".
Depth	Dial-button	Adjusts the scanning depth of the image.
Focus	Dial-button	Changes location and number of focus on the target location you wish to study.

Zoom	Dial-button	You can magnify an image.
Q Scan	Button	Press this button to turn the Quick Scan function on. The "Q Scan" mark will appear at the top of an image. It can be used only in specific applications with specific probes.
Freeze	Button	Pauses/resumes scanning.
Save	Button	Saves an image or a report displayed on the screen in the system database.
Print	Button	Prints an image on the screen using the printer connected to the system.
User 1	Button	This button is used to perform special functions that you have preset. The function of each button can be set in **Utility** > **Setup** > **User Defined Key**.
User 2-3	Dial-button	This button is used to perform special functions that you have preset. The function of each button can be set in **Utility** > **Setup** > **User Defined Key**.
Set / Exit	Button	This button is used to perform special functions that you have preset. The function of each button can be set in **Utility** > **Setup** > **User Defined Key**. Set: Select an item or value using the trackball. Used to also change the function of the trackball. Exit: Exits the currently used function and returns to the previous function.
Pointer	Button	When this is pressed, an arrow marker appears to point to parts of the displayed image.
Clear	Button	Deletes text, indicator, body marker, and measurement result, etc. displayed on an image.
Change	Button	This is used to change the current trackball function.
Calculator	Button	Starts to take measurements of each diagnosis item.
Caliper	Button	Starts to measure distance, circumference, area, and volume.
Trackball	Trackball	Moves the cursor on the screen. Also scrolls through CINE images.
TGC	Slider	Adjusts TGC values for each depth using 8 settings. TGC stands for Time Gain Compensation.

CAUTION: Too great a difference in the gain value settings of adjacent TGC sliders may cause stripes in an image.

Keyboard

The keyboard is used to type in text.

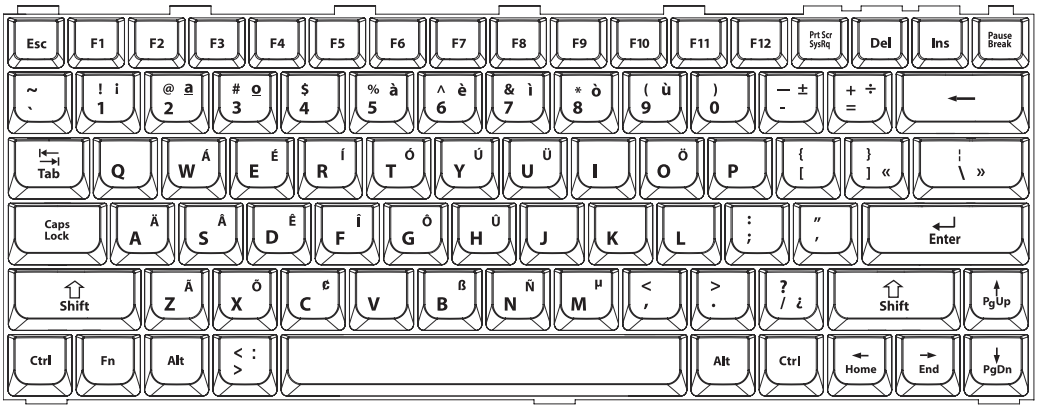

[Figure 2.5 Keyboard]

Touch-Screen

The touch screen is an operating tool that can be touched by the user to input data. The functions that are available in the current mode are shown in the form of buttons or a dial-button.

Touch Screen Layout

❶ Information Area: Shows the title of the touch screen currently displayed.

❷ Tab Area: Shows diagnostic modes and utilities under different tabs. The touch screen can be changed by pressing one of the tabs.

❸ Menu Area: The menu items that are available in the current input mode are shown in the form of buttons. The user can access the desired menu item by pressing the corresponding button. The menu currently in use is shown in orange.

❹ Soft Menu Area: The soft menu items that are available in the current input mode are shown on screen. The menus in use are shown with orange borders. Press or rotate the dial-buttons right below each menu.

Tips!

When there are two Soft Menus

When there are two menus available – upper and lower, both menus can be adjusted with the corresponding dial-button. Press a desired menu button on the touch screen and then use the dial-button.

[Figure 2.6 Touch Screen]

Adjusting the Control Panel

CAUTION:

- ▶ Do not apply excessive force to the control panel.
- ▶ Use the handle at the back of the product when moving it.

■ Adjusting to the right and left

Hold the control panel handle and move it carefully to the right or left.

■ Adjusting the height

Press the lever on the control panel handle and move it carefully up or down.

Console

The console consists of two parts – the inner and outer units. The interior of the console mainly contains devices that produce ultrasound images. On the exterior of the console are various connectors, probe holders, storage compartments, handles, and wheels, etc.

Rear Panel

A monitor and other peripheral devices are connected via the rear panel at the back of the system.

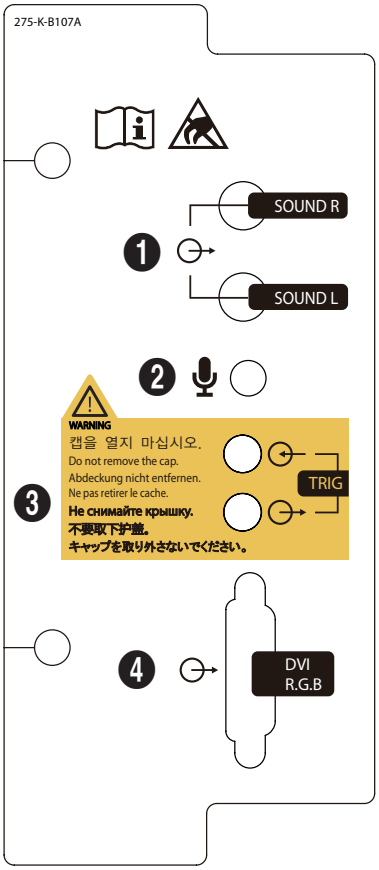

[Figure 2.7 Rear Panel]

Item	Descriptions
❶	Audio port (Output): Used to output audio signals.
❷	Microphone port (Input): Connect a microphone to this port.
❸	Trig port (In/Out): Not used.
❹	DVI port (Output): Outputs digital signals to the monitor.

NOTE: Connecting the Full HD wide monitor is recommended if you use the DVI port and connector. If you connect an RGB monitor, it might not display properly.

Power Connection Part

The power connection part is located at the bottom on the rear panel.

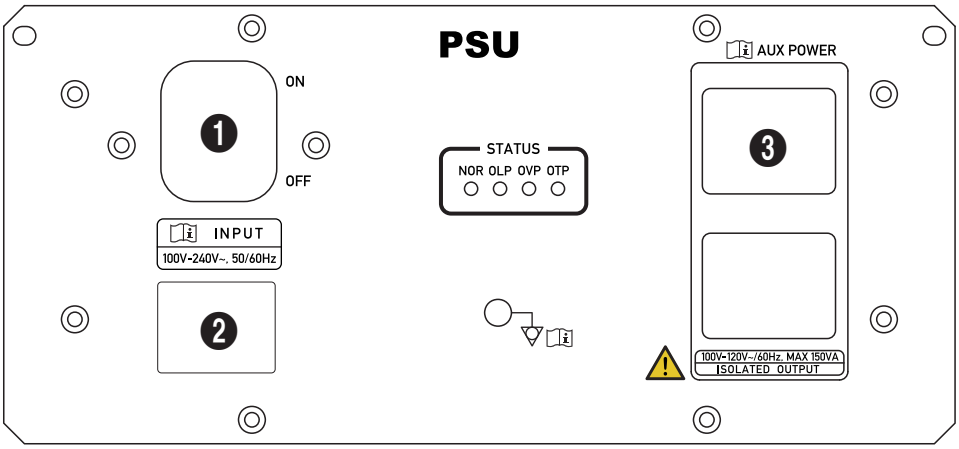

[Figure 2.8 Power Connection Part]

❶ Power switch: Supplies or blocks power to the entire system.

❷ Power Inlet: For the power cable to connect to external power.

❸ Power Outlet (Input): The part to which power is provided from the internal power device of the product.

Probe Holders

Probe holders are mounted at the left and right-hand sides of the control panel.

Peripheral Devices

CAUTION: Do not place peripheral devices, not listed in this manual, inside the patient environment. If you place them in the patient environment, it may cause electrical hazard.

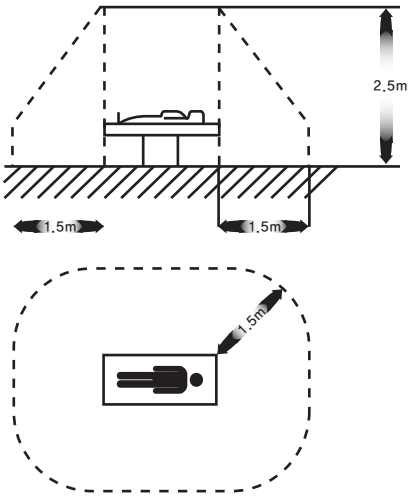

[Figure 2.9 Patient Environment]

NOTE: Refer to the operation manual of the peripheral device for its operating information.

Internal Peripheral Devices

These are peripheral devices mounted in the system.

DVD-Multi

DVD-RW, DVD+RW, DVD-R, DVD+R, CD-R, CD-RW, CD-ROM

Hard Disc Drive

At least 500 GB

External Peripheral Devices

These are peripheral devices that can be connected for use when needed and are connected via the USB port located at the rear panel.

CAUTION: When using a peripheral device via a USB port, always turn the power off before connecting/disconnecting the device. Connection/disconnection of USB devices during power-on may lead to malfunction of the system and the USB devices.

NOTE:

- When removing the removable disk, use **Utility** > **Storage manager**.

  USB ports are located both on the front panel and the rear panel of the console.

  We recommend that you connect USB storage devices (flash memory media, etc.) to the ports on the front panel and other USB peripheral devices to the rear panel for convenience.

The following products are recommended:

USB video printer

- Black and White: Mitsubishi P-95DE, Sony UP-D897
- Color: Mitsubishi CP-30DW, Sony UP-D25MD

CAUTION:

- You must install a Microsoft Windows XP™ or above compatible printer and driver. Contact Samsung Medison customer service department for inquiries about printer driver installation.
- When connecting the printer, ensure that the printer is configured under Microsoft Windows™ or system setup and has been chosen as the default printer.
- Please check the port that the printer uses before connecting. Printers should be connected to the printer port while the USB printer should be connected to the USB port.

USB to RS-232C Serial Cable

USB to Serial (RS-232C) Converter with FTDI Chipset (FTDI FT232BM Compatible)

NOTE: For more information about the Open Line Transfer, refer to 'Chapter 5. Measurements and Calculations'.

Foot Switch

To configure the foot switch function, go to **Utility** > **Setup** > **Peripherals** > **Foot Switch**. Select from Freeze, Update, Record, Print1, Save, Store Clip, and Volume Start, or EZ Exam.

WARNING: Foot Switch cannot be used in the operating room.

Misc.

Flash Memory Media

NOTE:

- The system cannot recognize USB 1.1 flash memory. Remove the flash memory from the console and equip again with an appropriate device.
- Regarding file formats that are not ordinarily saved: Please check first to see if it is possible to save the file format on a desktop PC before trying to save the file on flash memory.

Probes

Probes are devices that generate ultrasound waves and process reflected wave data for the purpose of image formation.

NOTE: For detailed information, refer to 'Chapter 9. Probes'.

Connecting probes

Be sure to connect or disconnect probes when the power is off to ensure the safety of the system and the probes.

1. Connect probes to the probe connectors on the front panel of the system. A maximum of five probes including the CW probe can be connected at one time. The CW probe should only be connected to its own connector.

2. To install, turn the connector turning handle clockwise.

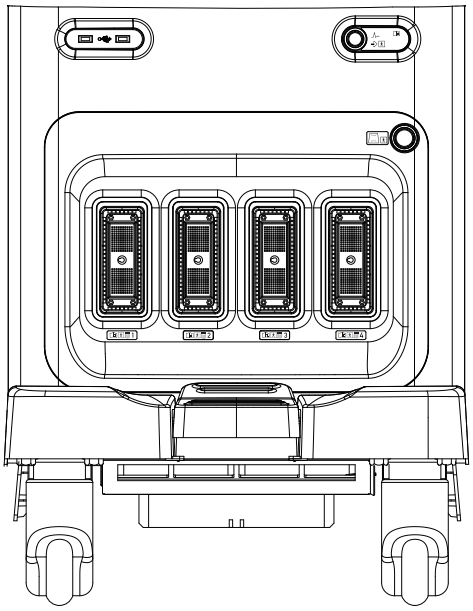

[Figure 2.10 Probe Connector]

Accessories

An accessory box containing the items below is supplied with the product.

CAUTION: Main cord set, separately certified according to the relevant standards, is to be used when supplied to EU and USA/CAN.

NOTE: Accessories can be different according to the country.

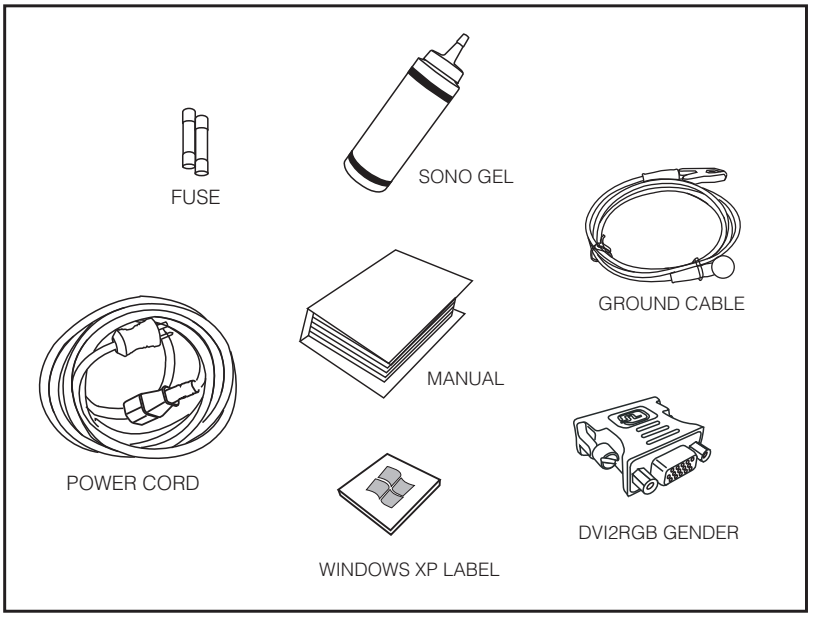

[Figure 2.11 Accessories]

Optional Functions

This product has the following optional functions:

- 4D
- 3D XI
- CW Function
- Cardiac Measurement
- DICOM
- Spatial Compound
- XI STIC
- Auto IMT
- ElastoScan
- Panoramic
- 3DMXI Upgrade
- HDVI
- VolumeNT
- ADVR
- ECI
- FRV

For further information about optional functions, please refer to the relevant chapters in this manual.

Chapter 3

Starting Diagnosis

▣ ***Power Supply*.....3-3**

Powering On.....3-3

Powering Off.....3-3

▣ ***Probes & Applications*.....3-4**

Probe and Application Selection.....3-5

Probe Userset Management.....3-6

▣ ***Patient Information*.....3-9**

Patient Information Entry.....3-11

Changing Measurements.....3-22

Work list Search.....3-25

Searching for Patient Information.....3-26

Restarting the Exam.....3-34

Power Supply

Boot up the system for use.

CAUTION: Make sure to connect the probes and peripheral devices that will be used before powering on the system. If you attempt to connect them during system use, it may lead to patient injury or irreparable damage to the console.

Powering On

Press the **On/Off** button when the power is off. Booting begins, and the product logo appears on the screen. When booting is completed, the 2D mode screen appears in End Exam status.

CAUTION: Before starting the diagnosis, you must register the patient information.

NOTE:

- The product should turn on about 10 seconds after the power switch at the back of the product is turned on.
- During system booting, do not press any key on the keyboard. It may cause product malfunction.
- If you turn on the power after turning it off suddenly, the system may turn on and off momentarily. This is one of the characteristics of the Intel® PC main board, not a system error.

Powering Off

Press the **On/Off** button while using the system to initiate shutdown.

CAUTION: Pressing the **On/Off** button for longer than five seconds will immediately turn the power off and result in damage to the hard disk. Please refrain from such use unless there is a serious emergency.

Probes & Applications

Before scanning, select a probe, an application and a Preset/Userset.

Press the **Probe** button on the control panel and the *Probe* screen will be displayed on the touch screen. From this screen, you can select or change the probe, application, Preset or Userset.

Press the **Probe** button again or the **Exit** button to exit from the *Probe* screen without applying the changes.

CAUTION: Refer to 'Chapter 9. Probes' for more information on probes and applications and the Preset/Userset supported by the system.

Probe Screen

The *Probe* screen consists of the following items:

[Figure 3.1 Probe – Touch Screen]

- Probe tab (❶): Displays a list of probes currently connected to the system.
- Application group: Displays a list of applications (❷) and their presets that the selected probe supports(❸).
- Userset group (❹): Displays a list of settings you can configure according to your preferences.

Probe and Application Selection

Select Probe → Application → Probe Preset/Userset. Tapping the Preset/Userset loads the settings and initiates the diagnosis mode. The selected probe and settings are shown in the title area of the monitor. The selected probe and Preset/Userset are displayed in yellow on the Probe screen.

Changing Pages

Use the **Page Index** dial-button to change the touch screen page.

Probe Userset Management

Adding a Probe Userset

The application and settings currently in use are added to the Userset.

1. Tap '+' in the Userset group on the touch screen. The *Name* window is then shown on the touch screen.
2. Enter the name you want to use and tap **Ok**. Click **Cancel** to cancel.
3. Userset and the application name are added to Userset group.

Tips!

Userset Group Name

The application name of the Userset which is added to the Userset list first time is entered as the name of Userset group. Go to **Edit** > **Rename** > **Application** to edit the name of Userset group.

Changing the Position of the Group

You can change the position of the application group or Userset group currently in use.

1. Tap **Edit** on the touch screen.
2. Rotate the **App Name** dial-button to change the position.
3. Tap **Edit** again to confirm the new position.

Overwriting a Userset

You can save the current probe settings to the selected Userset.

1. Tap **Edit** on the touch screen.
2. Tap **Overwrite** on the touch screen. The confirmation message 'Save Success' will be displayed on the monitor.
3. Tap **Edit** again to confirm the overwritten value.

Renaming a Userset

NOTE: You cannot edit or delete the Userset name currently in use.

1. Tap **Edit** on the touch screen.
2. Use the **Rename** dial-button to select the Userset to rename. Select **Application** or **Preset**.
3. Tap the dial-button to display the *Rename* window on the touch screen.
   - ▶ Application: The *Application Rename* window will be displayed. Change a Userset group name using this screen.
   - ▶ Preset: The Rename window will be displayed. Change a Userset name using this screen. You cannot change an application shown with the Userset name.
4. Change the name and tap **Ok**. Click **Cancel** to cancel.
5. Tap **Edit** again to confirm the change.

Deleting a Userset

NOTE: You cannot edit or delete the Userset currently in use.

1. Tap **Edit** on the touch screen.
2. Select a userset and tap **Delete** on the touch screen.
3. Tap **Edit** again to confirm the change.

Exporting/Importing a Userset

NOTE: The Userset Manager button is only active when a USB flash memory device is being used.

You can export and import Usersets to and from external storage media.

1. Tap **Edit** on the touch screen.
2. Select a Userset and tap **Userset Manager** on the touch screen. The *Userset Export/Import* window is then shown on the monitor.
3. To save the Userset on USB flash memory, tap the **Export** button. To copy a userset from USB flash memory to the system, tap the **Import** button. Tap **Close** on the screen.
4. Tap **Edit** again to confirm the change.

[Figure 3.2 Userset Export / Import]

Patient Information

Press the **Patient** button on the control panel and the *Patient Information* screen will appear. In this screen, you can enter, search, or change patient information.

NOTE: The ID and name fields are required.

Once you have entered the patient information, tap on the **OK** button on the monitor or the touch screen to exit. Press **Cancel** to cancel. Alternatively, you can press the control panel's **Patient** button once more or the **Exit** button.

Patient Information Screen

The *Patient Information* screen consists of two sections.

❶ Page Tab: Pages related to patient information entry are shown as tabs.

❷ Study Information Tab: Depending on the selected menu option, the patient information entry or management screen is shown.

[Figure 3.3 Patient Information]

Use the trackball and the **Set** button to select the desired field. Press a button on the touch screen to enter information using the touch screen.

Press **OK** on the screen to save the information and exit. Press **Cancel** or **Exit** on the touch screen to cancel.

[Figure 3.4 Patient Information – Touch Screen]

Patient Information Entry

From the *Patient Information* screen, tap on the **Patient** tab. Alternatively, use the touch screen's **Page** dial-button to select **Patient**.

[Figure 3.5 Patient Information]

The *Patient Information Entry* screen has the following layout:

❶ Basic Patient Information: Enter or edit ID, name, age, gender, and other types of basic patient information.

❷ Application Information: Add or edit required information for individual applications. To select an application, select the corresponding tab or use the touch screen's **Category** dial-button.

■ Clear Measurements

Clears all measured values previously entered.

Basic Patient Information Entry

ID

Enter a patient ID.

- To enter it manually, enter an ID in the ID field.
- To enter it automatically, select **Auto ID Creation** and click **New**. The icon, next to the ID field, is changed to .
- If you enter an ID that already exists, the icon, next to the ID field, is changed to .

Name

Enter the patient's full name. The name that you have entered will appear in the title area and reports.

- Last Name: Enter the patient's last name.
- First Name: Enter the patient's first name.
- Middle: Enter the patient's middle names if they have any.

Ez Exam Setup

Ez Exam Setup allows you to specify exam items and their order.

NOTE: For more information on Ez Exam Setup, refer to 'Chapter 7. Utilities'.

Accession

When viewing the work list for a patient via the DICOM server, this information is automatically displayed in the appropriate fields.

Representation

Specify how the names of Asian patients, including Korean, Chinese and Japanese are displayed.

- Roman: Type in Roman letters.
- Ideographic: Type in ideographic letters.

▶ Phonetic: Type in phonetic letters.

NOTE:

▶ This button appears on the screen only in a product that supports Asian patient names.

▶ For information on specifying the order or way in which names are displayed, refer to 'Screen Display Settings' in 'Chapter 7. Utilities'.

Birth

Enter the patient's birth date in the specified format.

Age

Enter the patient's age in "yy-mm" format. When a birth date is specified in the **Birth** field, this information is automatically calculated and displayed.

Gender

Select the patient's gender.

General

Enter additional information. Information entered in **General** is applied to all application information entry screens.

Height

Enter the patient's height. Height can be specified in inches (in.) or centimeters (cm). Tap on the **Unit** button to change units. When the unit is changed, the entered number is automatically recalculated and displayed in the new unit of measurement.

Weight

Enter the patient's weight. Supported units are ounces (oz), pounds (lb), and kilograms (Kg). Press the corresponding unit button to change the unit of measurement.

BSA

When the height and weight are entered, the BSA (Body Surface Area) is automatically calculated and displayed.

HR

Enter a heart rate.

Diag. Physician

Enter the name of the physician who diagnosed the patient. When there is more than one physician involved, you can use the **Combo** button to make a selection.

Tips!

Typing in Korean, Japanese or Chinese

Diag. Physician, Ref. - The Physician, Sonographer, Description and Indication can be entered in Korean, Japanese or Chinese. Choose the desired language by using the **Language** button on the touch screen.

- Korean: Entry in Korean.
- Alpha: Entry in English.

Ref. Physician

Enter the name of the referring physician. When there is more than one sonographer involved, you can use the **Combo** button to make a selection.

Sonographer

Enter the name of the sonographer who scanned the patient. When there is more than one sonographer involved, you can use the **Combo** button to make a selection.

Description

Enter a description of the diagnosis. If a description is entered, it can be searched for and viewed under Description in SONOVIEW.

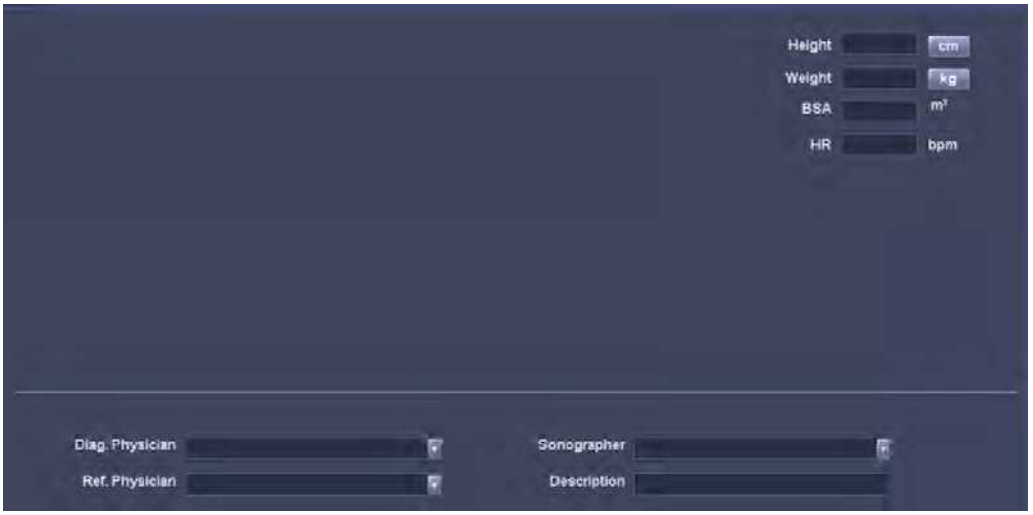

[Figure 3.6 General Information]

OB

Enter the obstetrical information.

LMP (Last Menstrual Period)

Enter the last menstrual period for a patient. You can enter it manually or have it automatically calculated and displayed with the GA entered.

Ovul. Date

Enter the expected ovulation date. LMP, GA, and EDD will be automatically calculated and displayed.

Tips!

Calculating LMP and EDD (LMP) with Ovul. Date

The following formulae are used:

- LMP = Ovul. Date - 14
- EDD = (280 -14) + Ovul. Date

NOTE: Values that have been calculated and entered cannot be changed.

GA (LMP)

Indicates the gestational age of a patient. You can enter it manually or have it automatically calculated and displayed with the LMP entered.

EDD (LMP)

With the LMP or GA entered, EDD (expected date of delivery) is calculated and displayed.

Tips!

Calculating EDD (LMP)

EDD can be calculated by entering LMP or GA.

- When LMP is entered: GA and EDD are automatically calculated and displayed on the screen.
- When GA is entered: LMP and EDD are automatically calculated and displayed on the screen.

Estab. Due Date

Enter the expected delivery date in the prescribed format. Once the expected delivery date is entered, LMP, GA (LMP), and EDD (LMP) are automatically calculated and displayed.

Number of Fetuses

Enter the number of fetuses. Up to four may be entered.

Day of Cycle

Enter a menstrual period in number of days (dd).

Ectopic

Enter the number of ectopic pregnancies.

Gravida

Enter the number of pregnancies.

Aborta

Enter the number of miscarriages.

Para

Enter the number of deliveries.

New Pregnancy

Deletes the patient's existing OB information.

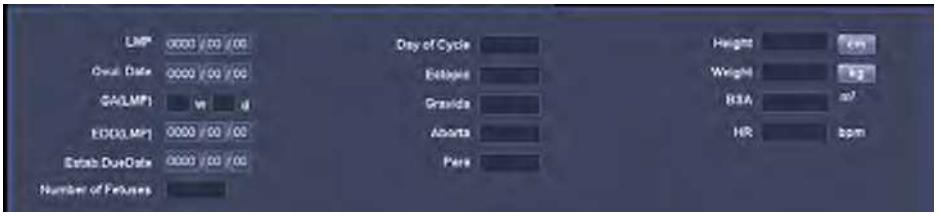

[Figure 3.7 OB Information]

Gynecology

Enter the gynecological information.

NOTE:

- In the GYN information input screen, even if the Ovul. Date is entered, LMP and EDD will not be calculated automatically.
- For other gynecological information, refer to the OB section.

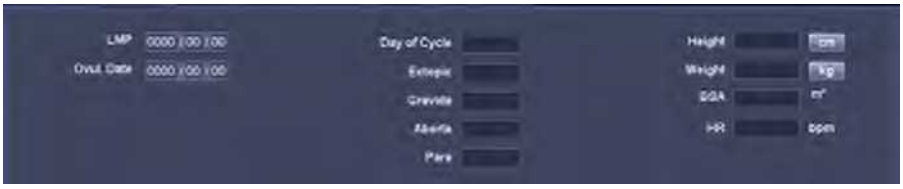

[Figure 3.8 Gynecology Information]

Adult Echo

Enter cardiologic information.

BP

Enter systolic/diastolic pressure (blood pressure).

Additional Information

Select the applicable check boxes.

Smoker	Hypertension
Diabetes	Hyperlipidemia
Family History	Surgery History
Murmur	Heart Failure
Coronary Heart Disease	Angina
Myocardial Infarction	Jugular Venous Distension
Dyspnea	Syncope
Arrhythmia	Rheumatic Heart Disease
Congenital Heart Disease	Heart Valve Disease

■ BP

Enter systolic/diastolic pressure (blood pressure).

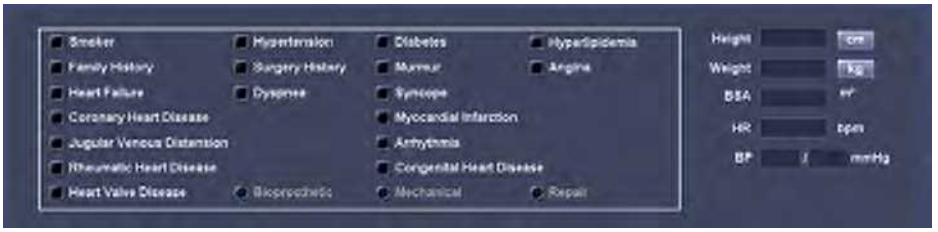

[Figure 3.9 Adult Echo Information]

Ped. Echo

Enter pediatric cardiac information.

■ Additional Information

Select the applicable check boxes.

Murmur	Dyspnea
Palpitation	Fever
Cyanosis	Paroxysm
Fainting	Chest Pain
Cardiomegaly	Dextrocardia
Pacemaker	Family History
VSD (Ventricular Septal Defect)	ASD (Atrial Septal Defect)
PDA (Patent Ductus Arteriosus)	COA (Coarctation of the Aorta)
TOF (Tetralogy of Fallot)	PS (Pulmonic Stenosis)
AS (Aortic Stenosis)	TGA (Transposition of the Great Arteries)

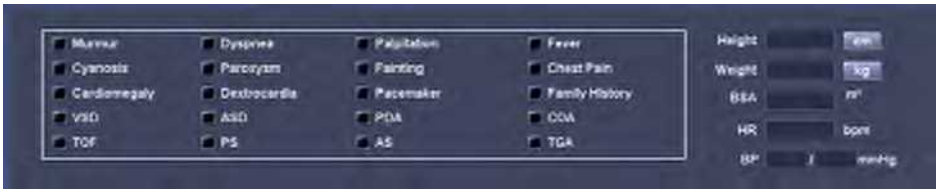

[Figure 3.10 Pediatric Echo Information]

Fetal Heart

Enter additional information about the fetal heart. Information that can be entered in this section is identical to the information in the cardiac section.

[Figure 3.11 Fetal Heart Information]

Vascular

Enter vascular information.

Additional Information

Select the applicable check boxes.

Smoker	Hypertension
Diabetes	Hyperlipidemia
Family History	Surgery History
Dizziness	Headache
Migraine	Stroke
Peripheral Neuropathy	

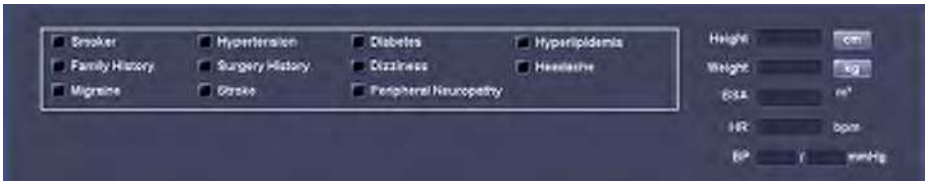

[Figure 3.12 Vascular Information]

TCD

Enter additional information for Transcranial Doppler (TCD).

Additional Information

Select the applicable check boxes.

Smoker	Hypertension
Diabetes	Family History
Dizziness	Vertigo
Migraine	Headache
Diplopia	Dysarthria
Dysphagia	Tinnitus
Stroke	Peripheral Neuropathy
TIA	Numbness
Paralysis	

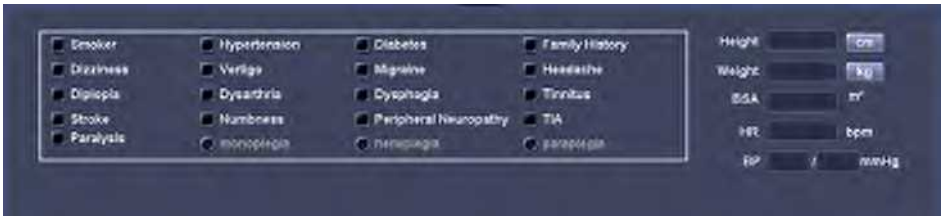

[Figure 3.13 TCD Information]

Urology

Enter urological information.

PSA

Enter the Prostate Specific Antigen (PSA) value.

[Figure 3.14 Urology Information]

Changing Measurements

From the *Patient Information Entry* screen, tap on the **Measure Data** button.

NOTE: Appears only when a patient ID has been selected.

Insert Measurement Data Screen

Tap on the **Insert Measurement Data** tab. You can enter the existing obstetrical measurements.

[Figure 3.15 Insert Measurement Data]

Exam Date

Enter the measurement date.

Fetus

If there are multiple fetuses, identify each one. Up to four fetuses (A, B, C, D) can be specified.

Exam No.

Up to eight exam numbers can be entered for each date. The Exam number is displayed at the bottom of the screen.

New Data

Cancel all measurement data entered for all exams and enter new measurement data.

Clear

Cancel entering the measurement data.

Insert

Complete entering the measurement data.

Page Browse

Use the **[>>]** or **[<<]** button.

Study Information

Loads application-specific *Patient Information* screen.

View Measurement Data Screen

Tap on the **View Measurement Data** tab. Measured values can be viewed on the screen or saved in an Excel file. The * symbol next to the Date indicates that the data is the current measurement data.

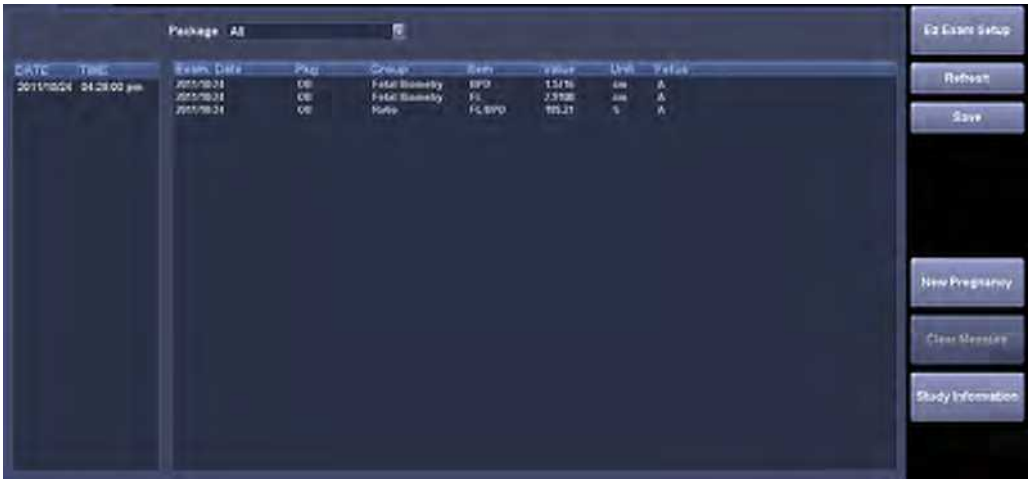

[Figure 3.16 View Measurement Data]

Package

Select a measurement package to display on the screen.

Refresh

Update the measurement data. Newly calculated measurements, or the measurements entered, are added.

Save

The *Save To Excel* window appears, allowing you to save information on the screen in an Excel file.

1. Designate the path.
   - ▶ To create a folder, select **Create**.
   - ▶ To delete a folder, select **Delete**.
2. Enter the file name. By default, the Excel file name is set to the measurement ID.
3. Select **Save** to finish. Press **Close** to cancel.

NOTE: Checking the HTML checkbox saves information as an HTML file instead of an Excel file.

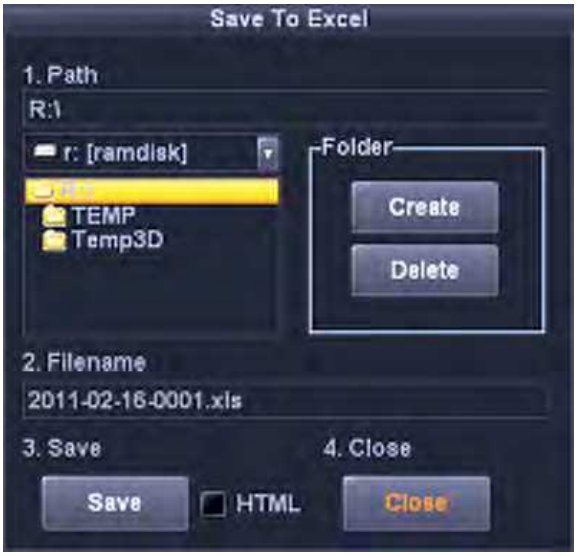

[Figure 3.17 Save to Excel]

Work list Search

On the *Patient Information* screen, select the **Work list** tab. Alternatively, use the touch screen's **Page** dial-button to select **Work list**. Perform a search by connecting to the DICOM Modality Work list server in the hospital network.

NOTE: A work list search is available only when DICOM is enabled. The Work list Server can be specified at **Utility** > **Setup** > **DICOM**. Refer to the 'Setting DICOM' section of 'Chapter 7. Utilities'

1. After entering at least one item out of Patient ID, Last Name, Accession # (work list number) and Procedure ID, click **Search**. The list of patients who match the criteria will be displayed.

Tips! Clicking items such as Date/Time or Patient Name sorts entries into alphabetical or numerical order for the selected criteria.

2. Select a patient list and tap on the **Apply** button. This applies the selected patient information to the system. Tapping on the **Start Exam** button applies the patient information to the system and switches the system to scan mode.

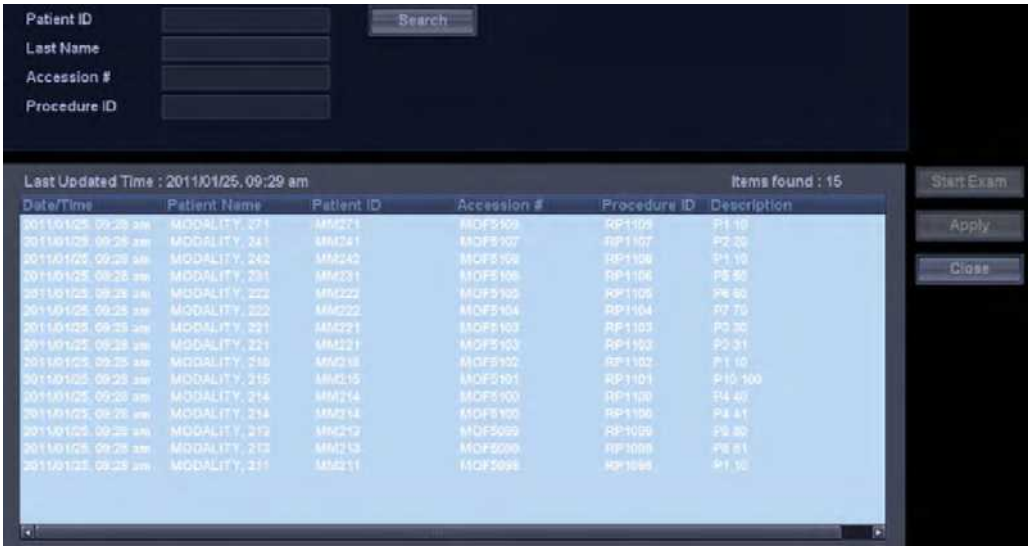

[Figure 3.18 Work list]

Searching for Patient Information

On the *Patient Information* screen, select the **Search** tab. Alternatively, use the touch screen's **Page** dial-button to select **Search**. Search through the patient information stored in the system.

[Figure 3.19 Search]

1. In **Search By**, select a search condition.

   ▶ Select **ID** to search using a patient ID or **Name** to search using a patient name.

2. Select a drive under **Drive**. Information about the selected drive is shown under **Current Information**.

3. After entering the required ID or name in the search box, click **Search**. The list of patients who match the search criteria will be displayed.

Tips!

▶ Entering Exam Date, Period, Category, and other types of additional information will provide a more accurate search return.

▶ Clicking items such as ID or Name sorts entries into alphabetical or numerical order for the selected criteria.

Exam List

Displays a list of exams returned from **Search**. In addition to patient ID, name, age, and gender, the exam list contains the following information:

- Exam Date: Exam date.
- Images: Number of images on record.
- Measurements: Measurement status.
- SR: Structured report status.
- SE: Stress echo exam status.
- SC: The transfer status of the exam (Storage Commit)
- Lock Status: Lock status.

Tips!

When you tap one of the fields, such as Patient ID and Name, the data is sorted by the alphabetic or numeric order of the selected field.

Tips!

Multi Select

It's possible to select multiple exams using one of the following two options:

- Tap on the **Multi Select** button and then select the desired exams.
- Hold down the keyboard's **Ctrl** key, press the **Set** button, and then select the desired exams.

Viewing Exam

Select an exam by using the trackball and the **Set** button, and click **Review** on the screen.

Switch to the SONOVIEW screen.

NOTE: For instructions on using SONOVIEW, refer to 'Chapter 6. Image Management'.

Deleting Exam

Select an exam by using the trackball and the **Set** button, and click **Delete** on the screen. All images from the exam will be deleted. However, an exam in progress or a locked exam cannot be deleted.

Select either to delete only the image or to delete only the exam. An exam without Measurement Data will not be displayed on the screen if only the image is deleted.

NOTE: Once deleted, exams cannot be recovered.

Tips!

To select more than one image, press the **Set** button while holding down the **Ctrl** key on the keyboard.

Sending Exams via DICOM

You can send selected exams via the DICOM network.

NOTE: Before using this feature, make sure that DICOM is properly configured. For instructions on configuring DICOM, refer to 'Chapter 7. Utilities'.

Perform the following steps to send the selected exam via DICOM:

1. Select exam(s) and then click **Send** on the screen. The *DICOM Storage* window will appear.

Tips! To select more than one image, press the **Set** button while holding down the **Ctrl** key on the keyboard.

2. Select the alias you wish to transmit. You can select images under Stored Images and reports under Storage SR.
3. Click **Transfer**. The transfer will be started and its progress (%) will be displayed. Press **Close** to cancel.

▶ Click **Test**, before sending the exam, to check the DICOM's connection with the server.

[Figure 3.20 DICOM Storage]

Printing Exams via DICOM

NOTE: Before using this feature, make sure that DICOM is properly configured. For instructions on configuring DICOM, refer to the Set DICOM section of 'Chapter 7. Utilities'.

Perform the following steps to print the selected exam via DICOM:

1. After selecting an exam, click **Print** on the screen. The *DICOM Printer* window will be displayed.

Tips! To select more than one image, press the **Set** button while holding down the **Ctrl** key on the keyboard.

2. Click **Transfer**. The transfer will be started and its progress (%) will be displayed. Press **Close** to cancel.

   ▶ Click **Test**, before sending the exam, to check the DICOM's connection with the server.

[Figure 3.21 DICOM Printer]

Exporting the Exam

Perform the following steps to export the selected exam to an external storage device:

1. After selecting an exam, click **Export** on the screen. The *Image Export* window will be displayed.

Tips!

To select more than one image, press the **Set** button while holding down the **Ctrl** key on the keyboard.

2. In **Drive**, select the device on which the exam will be saved. You can select CD-ROM, or flash memory.
3. In **File Name**, enter the file name. The same file name is given to all images of an exam. When an exam contains multiple images, a serial number is automatically added to the end of the file name.
4. In **File Format**, select the format in which the files will be saved. You can select BMP, JPEG, TIFF, or DICOM.
5. In **Export Option**, select the options to apply to the files. You can select multiple options.
   - ▶ 3D Volume Data: Export the 3D volume data together with the image.
   - ▶ 2D Cine: Export the stored Cine images after converting them to video files (AVI files).
   - ▶ 3D and Live Cine: Export 3D Cine and Live Cine images after converting them to video files (AVI files).
   - ▶ Hide Patient Information: Export images from which the patient ID and name have been deleted.
6. In **Directories**, select the location in which the exam will be saved. To create a new directory, click and enter the name. To delete a directory, select it and click . In **Files**, the files currently saved in the selected directory are displayed.

7. Click **Export** to begin exporting. Press **Close** to cancel.

[Figure 3.22 Image Exporting]

Backing Up the Exam

You can back-up the selected exams on an external storage device.

NOTE: USB devices with anti-virus software installed are not supported.

1. Insert a storage medium for backups. CD-ROM or flash memory can be used.
2. Select exam(s) and then click **Back-up** on the screen.

Tips! To select more than one image, press the **Set** button while holding down the **Ctrl** key on the keyboard.

3. A *Confirmation* window will appear asking whether to continue the back-up. Click **Yes** to continue. Click **No** to cancel.
4. The *Back-up* window will appear. Under **Drive**, select the media where the selected exams will be saved.
5. Click **OK** to start the back-up. Press **Cancel** to cancel.

[Figure 3.23 Exam Back-up]

Restarting the Exam

On the *Patient Information* screen, press the **Continue Exam** tab. Alternatively, use the touch screen's **Page** dial-button to select **Continue Exam**. This is a convenient way to update an exam that was performed within the past 24 hours with information from the current scan.

NOTE: Only the exams from the last 24 hours are displayed.

[Figure 3.24 Continue Exam]

Executing Exam

Select an exam by using the trackball and the **Set** button. Click **Review Exam** on the screen. The selected exam is shown on the screen, and the system switches over to scan mode. The initial exam date (Exam Reviewed) for each exam will also be shown in the user information area.

Chapter 4

Diagnosis Modes

▣ ***Information*** 4-3

Diagnosis Mode Types.....4-3

Basic Use 4-4

▣ ***Basic Mode***.....4-7

2D Mode 4-7

M Mode 4-20

Color Doppler Mode 4-23

Power Doppler Mode.....4-28

PW Spectral Doppler Mode 4-31

CW Spectral Doppler Mode.....4-36

TDI Mode 4-38

TDW Mode 4-40

ElastoScan Mode 4-42

▣ ***Combined Mode***..... 4-49

2D/C/PW Mode 4-49

2D/PD/PW Mode 4-49

2D/C/CW Mode 4-49

2D/PD/CW Mode 4-49

2D/C/M Mode 4-50

Dual Live Mode 4-50

2D/TDI/TDW 4-50

Chapter 4

▣ ***MULTI-IMAGE MODE..... 4-52***

Dual Mode.....4-52

Quad Mode.....4-53

▣ ***3D/4D Mode 4-54***

3D Stand By 4-58

3D View - MPR.....4-62

VOCAL.....4-72

3D XI 4-81

XI VOCAL.....4-90

4D 4-97

XI STIC 4-98

3D Utility Menu 4-102

Information

Diagnosis Mode Types

This product supports a variety of diagnosis modes, including Basic Mode, Combined Mode, Multi-Image Mode, and 3D/4D Mode.

- Basic Mode: Consists of several different modes, each of which has a specific usage and function. By default, 2D Mode is applied together with another mode.
- Combined Mode: For an image, two or three Basic Modes are applied at the same time. By default, 2D Mode is applied together with another mode. An image is viewed on a single screen.
- Multi-Image Mode: The screen is divided into two (dual) or four (quad) sub screens, each of which is used to view an image. Since each sub screen can display a different image, it can be a very useful feature, allowing multilateral views of an organ.
- 3D/4D Mode: 3D and 4D images can be obtained.

The types of diagnosis mode that are available with the product are shown below:

Mode	Type
Basic Mode	2D Mode Color Doppler Mode Power Doppler Mode M Mode PW Spectral Doppler Mode CW Spectral Doppler Mode TDI (Tissue Doppler Imaging) TDW (Tissue Doppler Wave Mode) ElastoScan Mode
Combined Mode	2D/C/PW Mode 2D/PD/PW Mode 2D/C/CW Mode 2D/PD/CW Mode 2D/C/M Mode 2D/TDI/TDW Dual Live Mode
Multi-Image Mode	Dual Mode Quad Mode
3D/4D Mode	3D Mode 4D Mode

NOTE: The functionalities for each mode may be restricted by the selected probe.

Basic Use

The items that can be used commonly in each diagnosis mode are shown below:

Using Control Panel

The items that can be used in each diagnosis mode are provided as menu items. You can change the image format or optimize an image to facilitate your diagnosis.

Gain

Use the dial-button on the control panel. The appearance of the Gain button may differ depending on the diagnosis mode that you select, but it is usually in the form of the same dial-button that you used to select a diagnosis mode.

You can adjust the brightness of an image. If you rotate the **Gain** dial-button clockwise, its value increases.

TGC (Time Gain Compensation)

Use the TGC slider on the control panel.

In general, ultrasound penetration gets weaker with depth. TGC can be used to compensate for this effect.

The product provides eight TGC sliders for varying depths, allowing you to adjust Gain by area. Among the eight sliders, the top slider represents the shallowest area, while the lower sliders represent the deeper ones.

Move the slider to the right to increase Gain and brighten the image.

Focus

Use the **Focus** dial-button on the control panel.

You can adjust the focus point. As you rotate the Focus dial clockwise, the focus point moves deeper.

You can also change the number of focus.

Depth

Use the **Depth** dial-button on the control panel.

You can adjust the scanning depth of an image. As you rotate the dial-button clockwise, the depth increases.

The allowable range for adjustment varies with the selected probe.

Zoom

Use the **Zoom** dial-button on the control panel.

You can magnify an image. An image can be magnified by either Read Zoom or Write Zoom.

▶ Read Zoom: This function allows you to zoom in or out of an image saved on a hard disk.

1. Rotate the **Zoom** dial-button on the control panel.
2. Use the Trackball to move the Zoom box. You can locate the Zoom box in an image with the Zoom Navigation box on the left side of the screen.
3. View the magnified image. If you rotate the dial-button clockwise, the image is magnified.

▶ Write Zoom: This function allows you to magnify and scan an image in real time.

1. Use the **Zoom** dial-button on the control panel. The Write Zoom box will appear on the screen.
2. Use the **Change** button to move and resize the Zoom box.
3. When you press the **Set** button, it changes to **Write Zoom**. To finish **Zoom** mode, press the **Zoom** dial-button once again. Or press the **Exit** button on the control panel. When using Write Zoom, changing **Depth** automatically finishes Zoom mode.

Q Scan

NOTE: Q Scan function is only available with specific probes and applications.

Use the **Quick Scan** button on the control panel. The 'Q Scan' mark will appear at the top of an image. Q Scan stands for Quick Scan.

In 2D Mode, Q Scan is used to optimize the contrast and brightness of an image by adjusting Gain and TGC automatically. In PW Spectral Doppler Mode, Q Scan is used to optimize the spectrum by adjusting Scale and Baseline automatically.

To finish Quick Scan mode, press the **Q Scan** button once again. Or press the **Exit** button on the control panel.

Using Touch Screen Menu

The items that can be used in each diagnosis mode are provided as touch screen menu items. You can change the image format or optimize an image to facilitate your diagnosis.

1. In diagnosis mode, menu items that are in use are shown on the touch screen.

   ▶ In a combined mode that uses more than one diagnosis mode, press a tab on the touch screen to specify settings for each mode.

   ▶ When there is more than one menu on the touch screen, use the → or ← button to navigate through pages.

2. Select a value by pressing a button or by rotating the dial-button on the touch screen.

Basic Mode

2D Mode

This basic mode, also referred to as B Mode (Brightness mode), provides scan planes of organs. This is used to display two-dimensional anatomical images in the direction of scanning in real time.

[Figure 4.1 2D Mode]

Entering 2D Mode

NOTE: Because 2D Mode is applied by default for all diagnosis modes, it cannot be terminated.

Press the 2D dial-button on the control panel.

If you press the 2D dial-button in other diagnosis modes, it will switch to the basic 2D Mode.

2D Mode Menu

[Figure 4.2 Touch screen for 2D Mode]

Harmonic

Turn it on or off by tapping **Harmonic** on the touch screen. The 'Har' mark Har is displayed in the image information area.

This product provides the OHI (Optimal Harmonic Imaging) function that optimizes an image with high frequencies.

NOTE: The Harmonic function is only available with specific probes.

Trapezoidal

NOTE: The Trapezoidal item appears in the menu only when a Linear Probe is used.

Turn this function on or off by tapping **Trapezoidal** on the touch screen.

In general, the rectangular frame provided by a Linear Probe is changed to a trapezoidal shape. This allows a wider view of an image.

The Trapezoid function may not be available for certain depths. In addition, the Write Zoom function cannot be accessed with the **Zoom** button when the Trapezoidal function is in use. (However, Read Zoom can still be used.)

Dual Live

Tap **Dual Live** on the touch screen and select On or Off.

The 2D image and Color Doppler image for the scanned area can be displayed simultaneously in real time.

Pulse Inversion

Turn this function on or off by tapping **Pulse Inversion** on the touch screen.

If it is turned on, pulses are inverted to sharpen the displayed image. The 'PI' mark appears at the top of the image.

NOTE: Pulse Inversion is only available with specific probes.

Panoramic

NOTE:

- Panoramic is an optional feature on this model.
- Available only in 2D mode with Linear and Convex probes.

The touch screen will be switched to the *Panoramic Ready* screen. For more information, please refer to 'Panoramic' in this chapter.

Low MI

NOTE: Low MI is only available under 2D mode with specific probes.

The touch screen will be switched to the *Contrast Agent* screen. Refer to 'LOW MI Mode' in this chapter for detail.

Spatial Comp

NOTE:

- Spatial Comp is an optional feature of this product.
- The menu is shown on the touch screen only when a Linear probe is being used.

Spatial Comp stands for Spatial Compound. The Spatial Compound mark appears on the image information. Spatial Comp, which can be used to select a value for **Spatial Compound**, is enabled on the touch screen. Tap the button on the touch screen or use the dial-button to select Low, Medium, or High for Spatial Compound.

DMR+

Turn this function on or off by tapping **DMR+** on the touch screen. The 'DMR+' mark is displayed in the image information area. DMR+ stands for Dynamic MR+.

This function removes the noise in images and intensifies boundary lines to make images more vivid. Five predefined indexes are available.

If it is turned on, **DMR+ Index** is enabled on the touch screen.

DMR+ Index

DMR+ removes the noise in images and intensifies boundary lines to make images more vivid. To set the DMR+ index, select a value between 1 and 5 by tapping a button on the touch screen or using the dial-button.

Frequency

For setting the probe frequency. Select Res, Pen, or Gen by tapping the corresponding button or using the dial-button on the touch screen. The selected frequency is displayed in the title area.

- Res: High Frequency (Resolution)
- Gen: Normal Frequency (General)
- Pen: Low Frequency (Penetration)

Dynamic Range

Dynamic Range adjusts contrast by changing the ratio of the minimum and maximum values of input signals. When this value becomes higher, the image is displayed more smoothly.

Select a value between 50 and 200 by tapping the desired button or using the dial-button on the touch screen.

Frame Avg

When an image is updated, Frame Avg averages the present image and the previous image. When you scan the same diagnosis site repeatedly, speckles may appear on the updated image. Frame Avg is used to minimize these speckles. Frame Avg stands for Frame Average.

Select a value between 0 and 15 by tapping the desired button or using the dial-button on the touch screen.

FSI

Renders data gained in 2D mode into images, using frequencies of numerous characteristics. Therefore, shallow observation depths yield higher resolution and deep observation depths yield higher penetration.

To do this, tap the corresponding button or use the dial-button on the touch screen. Select a value between 1 and 3. FSI is an abbreviation of Full Spectrum Imaging.

Reject Level

This function is used to eliminate noise or low level echo for clearer signals. Select a value between 1 and 32 by tapping the desired button or using the dial-button on the touch screen.

Speed

Select a value between 1440 and 1620m/s by tapping the desired button on the touch screen or by using the dial-button.

Gray Map

This changes the 2D Post Curve. Select a value between 1 and 13 by tapping a button on the touch screen or using the dial-button.

M Line

An M line appears on the image. The M line indicates where the observed image is located in the 2D image when either M or PW mode is used together with 2D mode.

Tap **M Line** on the touch screen and select On or Off.

Tips!

M Line and Sample Volume

When M Line is turned on, sample volume is shown along with the line. Sample volume's angle and depth information are also shown on the screen.

U/D Flip

Tap the up and down flip icon on the touch screen.

The image flips up or down each time this button is pressed.

L/R Flip

Tap the left and right flip icon on the touch screen.

The image flips left or right each time this button is pressed. The M mark at the top of the image indicates the present direction of the image.

Change Window

Each press of this touch screen button changes the active image area. The image being scanned is outlined in yellow at the top of it.

NOTE: To change the window setting, go to **Utility** > **Setup** > **General** > **Dual Mode**. For more information, refer to 'Setup' in 'Chapter 7 Utilities'.

Top-Bottom Dual

Use this touch screen button to change left and right display to top and bottom display in Dual mode.

View Angle

Adjust the image angle by tapping the desired button or using the dial-button on the touch screen. The button is enabled only when **Scan Area** is less than 100%.

Scan Area

Used to select the image width (%). Increasing the image width reduces the frame rate. Select a value between 40 and 100 by tapping a button on the touch screen or using the dial-button.

NOTE: View Area varies depending on the preset.

2D Image Size

Set the 2D image size by tapping the corresponding button on the touch screen or using the dial-button.

Select a value between 50 and 100 by tapping a button on the touch screen or using the dial-button.

Store Method

Select the type of Cine image that is saved when **Save** is pressed on the control panel. Select Time, Manual, or Beat by tapping the button on the touch screen or using the dial-button.

- Time: The images are saved over a set time period. Set the time (in seconds) by tapping the button on the touch screen or using the dial-button.
- Manual: The images are saved from the time when the **Save** button is pressed until the button is pressed again.
- Beat: Specify the heartbeat as 1 – 8 beats.

Line Density

Set the scan line density. Select Low, Medium, or High by tapping the button on the touch screen or using the dial-button.

Selecting High increases the number of scan lines and improves the image resolution. However, the frame rate is reduced.

Chroma Map

Turn this function on or off by tapping the touch screen button. If On is selected, **Chroma Map**, which allows image color setting, is enabled. Select a value between Type 1 and 13 or between User 1 and 3 by tapping the appropriate button on the touch screen or using the dial-button.

NOTE: User Type settings can be changed from **Utility** > **Post Curve** > **2D Post** > **Chroma Map**. For more information, refer to 'Chapter 7. Utilities' and see the Post Curve section.

Edge Enhance

Provides a clearer view of tissue and organ outlines. A higher value provides more accurate images of the boundaries.

Select a value between -3 and 3 by tapping the desired button or using the dial-button on the touch screen.

Power

Used to select the ultrasound output intensity. Select a value between 10 and 100 by tapping a button on the touch screen or using the dial-button.

2D Image Panning

Turn it **On** or **Off** by tapping the button on the touch screen. Turn it **On** to move the position of 2D image by using trackball.

Rotation

Rotate 2D image by using the touch screen buttons or the dial button.

Low MI

NOTE: Low MI function will be displayed in the 2D menu under the following conditions:

- Probe: C1-4, SC1-6
- Diagnosis item: Contrast
- Preset: Perfusion

CAUTION: Samsung Medison advises that Contrast agent imaging MAY NOT BE available on the system. Contrast agents for radiology use are undergoing clinical trial and are therefore, not yet available in the United States.

This function is used to observe tissues with a contrast agent injected.

Turn it on or off by tapping **Low MI** on the touch screen. If turned on, the touch screen will be switched to the *Contrast Agent* screen. The Low MI LOW MI symbol appears in the upper right corner of the screen and the Low MI timer appears in the upper left corner of the screen. The Contrast menu is shown on the touch screen.

Tips!

Low MI Mode

- When entering Low MI mode, Dual Live mode is displayed by default.
- FSI turns off and Pulse Inversion turns on.
- Other functions, such as Harmonic and PPI, become disabled.
- You cannot switch to other diagnosis modes.

Low MI Type

Used to select Low MI type. Select between Agent and Tissue using the touch screen buttons.

- Agent: Displays the images in Pulse Inversion mode.
- Tissue: Displays the images in 2D mode.

Timer

- Start/Stop: Start or stop the Low MI timer.
- Reset: Reset the Low MI timer.

Flash

Turn Flash on or off by tapping Harmonic on the touch screen. The images are shown at a higher brightness setting for the number of frames specified in **Frame**.

Frame

Set a value between 3 and 100 frames to specify the period of time for which the Flash function will operate.

MI control

Select the Low MI value from 3 to 60.

Tips!

Meaning of MI Control

3~60 in MI Control are user-controlled steps that reflect 0.03~0.60 of actual low MI value. MI Control refers to the adjustment of TX voltage and the actual MI value is usually MI control value * 0.03, so it does not exceed a maximum of 0.6.

Because of the resolution of the TX voltage adjustment, when the TX voltage does not change from the control step, MI value is expressed in MAX Hold format.

Sensitivity

- Low Sensitivity: The sensitivity to the contrast agent is low, but the elimination of the surrounding anatomy is greater.
- Middle Sensitivity: Compared with Low Sensitivity, the sensitivity to the contrast agent is higher, and the elimination of the surrounding anatomy is lower.
- High Sensitivity: This has the highest sensitivity to contrast agent, with moderate elimination of anatomy. The frame rate, however, is the lowest.

Frame Rate Limit

The value specified as the Frame Rate Limit determines the overall frame rate. Select a Frame Rate Limit between 1 and 30.

TIC

- Press the **Freeze** button on the control panel in LowMI mode, and TIC will be displayed.
- The Time Intensity Curve is the time change curve of the average intensity of the Agent image's ROI.
- The Time Gradient Curve represents the time-dependent gradient of the Time Intensity Curve.
- The Current Result Table provides a numerical representation of the average intensity and the standard deviation for the Agent image currently being displayed on screen.

Cine Save

Saves Cine image.

Cine Play

Plays Cine image.

Trim First

After specifying the position of the first frame by rotating the dial-button or using the trackball, tap the dial-button to save it.

Trim Last

After specifying the position of the last frame by rotating the dial-button or using the Trackball, tap the dial-button to save it.

Cine Speed

Rotate the dial-button to adjust the auto playback speed.

[Figure 4.3 Low MI - Touch Screen]

NOTE: For information on other menu items, please refer to '2D Mode.'

Panoramic

NOTE:

- Panoramic is an optional feature on this model.
- Available only in 2D mode with Linear and Convex probes.

Panoramic Imaging is the function that acquires images over a wider range by using continuous ultrasonographic images. Up to 500 frames can be used.

Acquiring a Panoramic Image

1. Tap **Panoramic** on the touch screen. The touch screen will be switched to the *Panoramic Ready* screen.
2. Tap **Start/Stop** on the touch screen. The system will begin to acquire a panoramic image.
3. Tap **Start/Stop** to end the acquisition of the panoramic image. The touch screen will be switched to the *Panoramic Review* screen.

Tips!

Cautions for Acquiring a Panoramic Image

- When scanning a curved surface, ensure that the scan surface and the contact surface of the probe are always at right angles.
- Moving in the opposite direction while acquiring an image erases the previous saved frames and saves new frames.
- The image quality may deteriorate if the contact surface of the probe loses contact with the scan surface.
- If the scan speed is fast or the contact surface of the probe changes in angle, artifacts may occur.

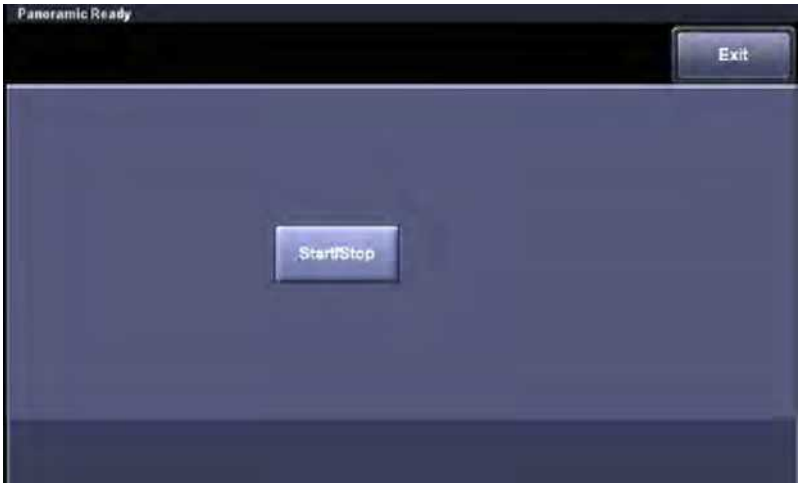

[Figure 4.4 Panoramic Ready – Touch Screen]

Reviewing a Panoramic Image

NOTE:

- You can perform basic measurements using the **Caliper** button. But other functions on the control panel are not available.
- **L/R Flip**, **U/D Flip**, and **Magnifying** are only available when **Layout** is set to Full Screen.

[Figure 4.5 Panoramic Review – Touch Screen]

- L/R Flip: Flip the panoramic image horizontally.
- U/D Flip: Flip the panoramic image vertically.
- Ruler: Tap the button to turn on or off. When turned on, the ruler is displayed on the panoramic image.
- Cine Save: Saves Cine images.
- Layout: Specify how the panoramic image will be displayed on the screen.
  - Full Screen: Display the panoramic image in full screen mode.
  - Left/Right: Display the 2D and panoramic images at the left and right of the screen, respectively.
  - Top/Down: Display the 2D and panoramic images at the upper and lower parts of the screen, respectively.
- Rotation: Rotate the panoramic image.
- Magnifying: Magnify the panoramic image.
- Return: Return to the *Panoramic Ready* screen.
- Exit: Exit Panoramic Imaging.

NOTE: For information on other menu items, please refer to '2D Mode.'

M Mode

The M Mode is used to specify an observation area in a 2D image with the M Line, and the display changes over time.

This mode is appropriate for the observation of organs with a lot of movement, such as cardiac valves. The 2D Mode image is also shown, allowing the marking and adjustment of an observation area within the entire image.

[Figure 4.6 M Mode]

Entering & Exiting M Mode

Tap the **M/x** dial-button on the control panel. Tap the same button again. M Mode will be terminated and the mode switched to 2D.

M Mode Screen

M Line

Use the trackball on the control panel to move to the right or left. The M Line indicates the relative position of the M Mode image in the 2D image. Therefore, you can move the M Line to change the observation area.

M Mode Menu

Anatomical M

Tap **Anatomical M** on the touch screen and select On or Off. When turned on, it is possible to adjust the length of the M line. You can also use the **Change** button to specify the line's position between M Point 1 and M Point 2.

NOTE: This is only supported in Phased Array Probe or Cardiac applications.

Sweep Speed

Select 60Hz, 120Hz, 180Hz, 240Hz, 300Hz, or 360Hz using the touch screen buttons or the dial-button.

Negative

This function inverts the color of M images. Turn it on or off by tapping the **Negative** button on the touch screen.

Display Mode

Used to select the M image size. Select a value from 4:6, 5:5, and 6:4 using the touch screen's buttons or the dial-button.

M Edge Enhance

Used to specify the M image's Edge Enhancement value. Select a value between -3 and 3 by tapping a button on the touch screen or using the dial-button. Higher values provide more accurate images of boundaries.

[Figure 4.7 Touch Screen for M Mode]

NOTE: For information on other menu items, please refer to '2D Mode'.

Color Doppler Mode

This mode displays the colored blood flow pattern of the ROI (Region of Interest) within the 2D image.

It is appropriate for examining the presence of the blood flow, as well as its average speed and direction. The 2D Mode image is also shown, allowing the marking and adjustment of the ROI within the entire image.

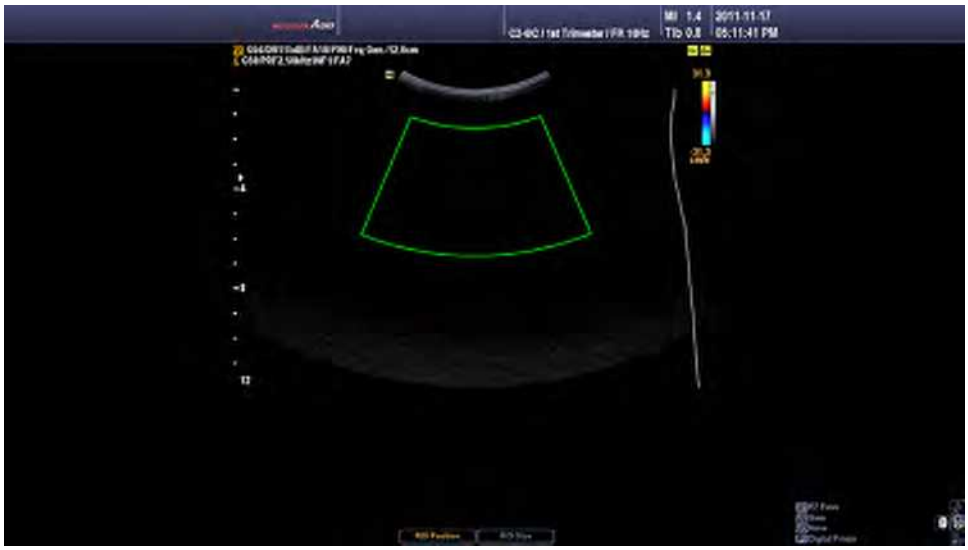

[Figure 4.8 Color Doppler Mode]

Entering & Exiting C Mode

From the control panel, tap on the **Color/Ref**. **Slice** dial-button. Tap the button again to end C mode and switch to 2D mode.

C Mode Screen

ROI Box

ROI stands for Region of Interest. The ROI Box outlines the area of the 2D image where color (blood flow) information is displayed in Color Doppler Mode.

Use the **Change** button to move and resize the ROI box. Each time you tap the Change button, the current state of the ROI box is displayed in the lower left of the screen.

- ROI Position: In this state, the position of the ROI box can be changed. Use the trackball to move and position the ROI Box.
- ROI Size: In this state, the size of the ROI box can be changed. Use the trackball to move the ROI Box and specify its size.

Color Bar

In Color Doppler mode, the color bar indicates the direction and speed of blood flow. Based on the Baseline at the middle, red indicates the direction and speed of blood flow toward the probe. By contrast, the blue color indicates the direction and speed of the blood flow away from the probe.

- Color Bar Baseline Adjustment: Use the **Baseline** dial-button on the touch screen. If you rotate the **Baseline** dial-button clockwise, the baseline on the color bar rises.

C Mode Menu

Color Invert

The color bar is inverted each time the **Color Invert** button is tapped. When the color bar is inverted, the colors on the image are also inverted.

Frequency

For setting the probe frequency. Select between Pen and Gen using the touch screen's buttons or the dial-button.

Filter

Eliminates low-frequency Doppler signals created by vessel wall movement. Adjust the Cutoff Frequency to remove doppler signals whose frequency is lower than the cutoff frequency.

Select an index between 0 - 3 by tapping the desired button or using the dial-button on the touch screen.

Scale

Used to adjust PRF (Pulse Repetition Frequency). Rotate the dial-button clockwise to increase the PRF value and broaden the displayed blood flow speed range. Rotate the dial-button counterclockwise to decrease the PRF value and narrow the displayed blood flow speed range.

Baseline

Rotating the dial-button clockwise increases the color bar's baseline.

In Color Doppler mode, the color bar indicates the direction and speed of blood flow. Based on the Baseline at the middle, red indicates the direction and speed of blood flow toward the probe. By contrast, the blue color indicates the direction and speed of the blood flow away from the probe.

Balance

The range of a color image can be adjusted by comparing the gray levels of 2D images with the Doppler signal values of color images. Select a value between 1 and 31 by tapping a button on the touch screen or using the dial-button.

When the Balance value increases, the color image also appears in the part where the gray level of a 2D image is high (the bright part), increasing the range of the color image.

Display Mode

Used to configure the display method in Color Doppler mode. Select Color + BW or BW Only using the touch screen's buttons or the dial-button.

Color Mode

NOTE: The button for the Color Mode is only enabled in Phased Array Probe or Fetal Heart Preset.

Sets details of the color display. Select Velocity or Vel+Var using the touch screen's buttons or the dial-button. Vel stands for Velocity, and Var for Variance.

Sensitivity

Used to select color image sensitivity. Select a value between 8 and 31 by tapping a button on the touch screen or using the dial-button.

When this value increases, the sensitivity of a color image improves, but the frame rate becomes lower.

Smooth

Smoothes color images. Select a value between 1 and 8 by tapping a button on the touch screen or using the dial-button.

Alpha Blending

Superimposes a color image over a 2D image in the color image area.

Blending Level

Specify the blending ratio between the 2D image and the color image. Select a value between 0 and 25 by tapping a button on the touch screen or using the dial-button. A lower number gives the 2D image greater prominence. The lower the number, the higher the ratio of the 2D image gets.

Low / Mid / High

Adjusts the frame rate of the color image. Make a selection by tapping the corresponding button on the touch screen.

NOTE: This function may be restricted depending on the current probe and/or application.

Density

Select the density of the scan line. Select Low, Middle1, Middle2, or High by tapping the **Density** button on the touch screen or using the dial-button.

Selecting High increases the number of scan lines and improves the image resolution. However, the frame rate is reduced.

Steer

NOTE: The button for the Steer function is only activated when a Linear probe is being used.

Adjusts the angle of the ultrasound beam to minimize loss of color information. Select from Left, Right, and None using the touch screen's buttons or the dial-button.

TDI

Tapping the **TDI** button on the touch screen changes to TDI mode. TDI stands for Tissue Doppler Imaging.

NOTE:

- ▶ This function can only be used with Phased Array Probe and cardiac application.
- ▶ For more information on TDI, see TDI Mode.

[Figure 4.9 Touch Screen for Color Doppler Mode]

NOTE: For information on other menu items, please refer to '2D Mode.'

Power Doppler Mode

This mode uses colors to represent the intensity of blood flow within the ROI in the 2D image.

It is appropriate for examining the presence and amount of blood flow. The 2D Mode image is also shown, allowing the marking and adjustment of the ROI within the entire image.

[Figure 4.10 Power Doppler Mode]

Entering & Exiting PD Mode

Tap the **PD/y** dial-button on the control panel. Tap the button again. PD Mode will be terminated and the mode switched to 2D.

PD Mode Screen

Color Bar

The color bar changes based on the power Doppler mode display setting under the PD mode menu.

- PD Mode: The color bar indicates the presence of blood flow and its amount. The top of the color bar is the brightest section, where the amount of blood flow is at its highest.
- DPDI Mode: The color bar indicates the direction and speed of blood flow. Based on the Baseline at the middle, red indicates the direction and speed of blood flow toward the probe. By contrast, the blue color indicates the direction and speed of the blood flow away from the probe.

ROI Box

The ROI (Region of Interest) outlines the area of the 2D image where color (blood flow) information is displayed in Power Doppler Mode.

PD Mode Menu

Color Invert

The color bar is inverted each time this touch screen button is tapped. Inverting the color bar also inverts the color displayed on the image.

NOTE: The **Color Invert** button only appears on the touch screen when PD Mode is set to DPDI.

PD Mode

Used to configure the power Doppler mode display setting. Select either PD Mode or DPDI Mode using the touch screen buttons or the dial-button.

- PD Mode: Displays blood flow intensity (Power) only.
- DPDI Mode: DPDI is an abbreviation of Directional Power Doppler Imaging. If selected, blood flow intensity, speed, and direction are shown.

[Figure 4.11 Touch Screen for Power Doppler Mode]

NOTE: For information on other touch screen menu items, please refer to the '2D Mode' and 'Color Doppler Mode' sections.

PW Spectral Doppler Mode

PW stands for Pulse Wave. This mode displays blood flow speed at a specific vessel location over specific time frames. Distance (depth) information can also be obtained by transmitting pulses over time frames.

This mode is useful for measuring low-speed blood flow such as in the abdomen and peripheral vessels. The 2D Mode image is also shown, allowing the marking and adjustment of an observation area within the entire image.

[Figure 4.12 PW Spectral Doppler Mode]

Entering & Exiting PW Spectral Doppler Mode

Press the **PW/z** dial-button on the control panel. Press it again to return to 2D Mode.

Press the **Set** button on the control panel to obtain a spectral doppler image.

NOTE:

- The doppler image can only be obtained in D Only or Simultaneous state.
- When the M Line is enabled, you can instantly get a spectral doppler image in PW mode.

PW Spectral Doppler Mode Screen

The doppler spectrum is displayed when the Sample Volume is overlaid on the blood flow on the 2D image. The size and depth of Sample Volume is displayed in [mm] units. Its position is moved with the Trackball and displayed in the xx.xx@yy.yy mm format. The displayed value indicates xx.xx mm sample volume size at yy.yy mm depth.

For example, 2.00@16.70 mm indicates 2.00mm sample volume at 16.07mm depth.

- Moving Sample Volume: Use the Trackball on the control panel.
- Resizing Sample Volume

  On the control panel: After pressing the **Change** button on the control panel, adjust the size of the sample volume by using the trackball. Press the **Change** button again to return to the Sample Volume Position Control screen.

  On the touch screen: Tap **SV Size** on the touch screen. Select a value between 0.5 - 15 by tapping the desired button or using the dial-button on the touch screen.
- Adjusting Sample Volume Angle: Select a value between -70° and 70° by rotating the **Angle** dial-button on the control panel. You can quickly select –60°, 0°, or 60° by pressing the **Angle** dial-button.

Adjusting Doppler Baseline

Adjust the **Baseline** by rotating the dial-button on the touch screen.

HPRF

NOTE:

- Enable/disable HPRF from **Utility** > **Setup** > **General** > **Scan Mode** > **Option**.
- HPRF is not activated in Simultaneous Mode. In addition, HPRF will not be activated if twice the PRF value is greater than 23KHz.

HPRF detects the blood flow above the speed limit at a specific depth. This increases the scale. This function is only available in PW Spectral Doppler Mode (D Only). HPRF stands for High PRF.

- **Activating HPRF**

  Continuing to increase the scale value at a specific depth initiates HPRF. The Phantom Gate will appear on the D Line at a position higher than the sample volume. Once HPRF starts, PRF does not increase even if you increase the scale value.

▶ **Finishing HPRF**

While HPRF is in use, decrease the scale value by one step to finish HPRF. Here, the PRF value becomes the maximum value in the current PW Spectral Doppler Mode.

▶ **Moving Sample Volume**

To move the Sample Volume position in the D Only state, the system calculates PRF values and the Phantom Gate position, and updates them on the PW Spectral Doppler image. HPRF is terminated when HPRF cannot be activated.

When Sample Volume is moved in the 2D Only state, the PRF values don't change.

CAUTION:

- While zoomed in, the Phantom Gate's position can end up outside the 2D image area.
- Make sure that the sample volume and the Phantom Gate are not placed together in the measuring area. If more than two Sample Volumes are located in the vessels, all Doppler components will appear in the spectrum, causing noise.

PW Spectral Doppler Mode Menu

Simultaneous

NOTE: This mode appears in the PW menu only when **Utility** > **Setup** > **General** > **Simultaneous Mode** is set to Allow.

Each time you tap the touch screen button, the Simultaneous function turns on or off.

Turning the Simultaneous function on initiates real-time observation of both 2D images and spectral Doppler images. With it turned off, however, you can only observe one of the two. The Simultaneous function decreases Doppler PRF, thus decreasing the measurable speed range.

Doppler Invert

Tap **Doppler Invert** on the touch screen. Each time the button is pressed, the speed indicator (+ / –) for a spectrum is inverted.

Sound

Adjusts the doppler volume. Select a value between 0 and 100 by tapping the button on the touch screen or using the dial-button.

Mean Trace

Tap **Mean Trace** on the touch screen. Mean Trace for the selected spectrum is performed.

Auto Calc

Turn this function on or off by pressing **Auto Calc** on the touch screen.

If it is turned on, a Doppler Trace is performed and its results are displayed. Up to 6 calculations can be defined from **Utility** > **Setup** > **AutoCalc**. If it is turned on, the **Mean Trace** button is enabled.

For calculation configuration instructions, refer to the Measure Setup section in 'Chapter 7. Utilities'.

CAUTION: The measurements done by Auto Trace under Measure and Real Time Automatic Doppler Trace (Automatic Calculator) may be different from each other. This is because the algorithms for these two methods are different. It is recommended that you use Auto Trace under Measure for more accurate measurement.

Tips!

Things to Consider when using Real Time Automatic Doppler Trace

1. Aliasing occurs when PRF is too low in comparison to the image speed, or the spectrum is clustered around the baseline because PRF is too high.
2. Peaks may be indistinct or intermittent, such as in Spectral waveforms for veins.
3. Meaningful spectrum distinction becomes difficult when Doppler Gain is set too high or too low.
4. An index is displayed during the transition time after Sample Volume is moved with the Trackball.
5. The major spectral signals are cut off when Doppler Wall Filter is set too high.
6. Peak Trace is interrupted when there is abnormal Doppler noise or artifacts, and the heart rate is above approximately 140 bpm.

The above cases may result in inaccurate Real Time Automatic Doppler Trace results. Furthermore, during auto calculation, results will not be displayed if the Freeze function is run against inaccurate values.

AutoCalc Direction

Select the calculations that you wish to make using Auto Calc in Spectrum. Select All, Up, or Down using the touch screen buttons or the dial-button.

TDW

NOTE:

- This function can only be used with Phased Array Probe and cardiac application.
- For information on TDW, please refer to 'TDW Mode.'

The system will switch to TDW Mode. TDW stands for Tissue Doppler Wave.

Spectrum Ehn.

Used to configure the brightness and sensitivity levels for spectral Doppler images. Select an index between 1 - 4 by tapping the desired button or using the dial-button on the touch screen. Spectrum Ehn stands for Spectrum Enhancement.

Spectrum Type

Select the spectrum type. Select from Type 1 to Type 3 by tapping the corresponding button or using the dial-button on the touch screen.

[Figure 4.13 Touch Screen for PW Spectral Doppler Mode]

NOTE: For information on other touch screen menu items, please refer to the '2D Mode' and 'Color Doppler Mode' sections.

CW Spectral Doppler Mode

CW stands for Continuous Wave. This mode displays blood flow speed and direction at a specific vessel location over specific time frames. Unlike PW Spectral Doppler Mode, it does not provide Sample Volume.

NOTE:

- ▶ CW Spectral Doppler Mode is an optional feature on this model.
- ▶ CW Spectral Doppler Mode can only be used with the Phased Array or Static CW probe.

[Figure 4.14 CW Spectral Doppler Mode]

■ Steered CW Spectral Doppler Mode

This mode is only available with a Phase Array Probe. The 2D Mode image is also shown, allowing the marking and adjustment of an observation area within the entire image.

■ Static CW Spectral Doppler Mode

This mode is only available with a Static CW Probe. The 2D image is not displayed.

Entering & Exiting CW Spectral Doppler Mode

Press the **CW/LR** dial-button on the control panel. Press it again to return to 2D Mode.

CW Spectral Doppler Mode Menu

[Figure 4.15 Touch Screen for CW Spectral Doppler Mode]

NOTE: Description for touch screen menu items is the same as for PW Spectral Doppler Mode.

TDI Mode

TDI stands for Tissue Doppler Imaging. TDI mode represents the movements of tissues such as the heart. TDI is available in Color Doppler Mode. In Color Doppler or Power Doppler Mode, TDI shows cardiac tissues in color.

NOTE: This function can only be used with Phased Array Probe and cardiac application.

[Figure 4.16 Tissue Doppler Imaging Mode]

Starting and Ending TDI Mode

Press the touch screen's **TDI** button in **C** mode to enter TDI mode. Press the button again to exit TDI mode and enter C mode.

Tips!

Starting TDI mode using User Key

Set **User Key 2** or **User Key 3** to TDI Mode. You can start TDI mode using a button while performing scan. User Key can be set from **Utility** > **Setup** > **User Defined Key** > **User Key Setup**.

TDI Mode Menu

[Figure 4.17 Touch Screen for TDI Mode]

NOTE: For information on other menu items, please refer to 'PW Spectral Doppler Mode.'

TDW Mode

TDW stands for Tissue Doppler Wave. TDW mode represents the movements of tissues such as the heart. TDW Mode is available in PW Spectral Doppler Mode. If it is used in Spectral Doppler Mode along with Color Doppler or Power Doppler Mode, changes in cardiac tissues can be observed over time.

NOTE: This option is only available when the cardiac application is selected for a Phased Array probe.

[Figure 4.18 TDW Mode]

Starting and Ending TDW Mode

Press the **PW/z** dial-button while in TDI mode. Or tap the **TDW** button on the touch screen in PW Spectral mode. Tap on the corresponding button once more to toggle between TDI mode and PW mode.

TDW Mode Menu

[Figure 4.19 Touch Screen for TDW Mode]

NOTE: For information on other menu items, please refer to 'PW Spectral Doppler Mode.'

ElastoScan Mode

The elasticity of an ROI in a 2D image is shown in color. A scanned 2D image is also displayed to indicate the relative position of the ROI and allow the user to change the position.

NOTE:

- ▶ ElastoScan Mode is an option for this product.
- ▶ The probes, applications, and presets that support ElastoScan are as follows:
  L5-13IS (Smallparts – Breast, Thyroid (Except North America)), L5-13/50 (Smallparts – Breast, Thyroid (Except North America)), EC4-9IS (Urology – Prostate, Gynecology – General, Adnexa), VR5-9 (Urology – Prostate, Gynecology – General, Adnexa)

Tips!

ElastoScan

This process converts the elastic modulus (ultrasound image data) of a target object, obtained from continuous ultrasound images, into an elastogram. A lesion's location can be estimated by using the differences in elastic modulus obtained from elastograms. The function of elastography is to determine the difference in hardness or stiffness between healthy organs and lesions. Palpation has been used to measure stiffness, but this method is only useful at depths close to the surface of tissue. ElastoScan allows the user to identify the existence of solid masses in tissue, and converts the hardness data into an image by sonically enhancing the palpation.

Elastography shows the spatial distribution of tissue elasticity properties in a region of interest by estimating the strain before and after tissue distortion caused by external or internal forces. Quantitative elastography is not provided.

Entering and Exiting E Mode

While in 2D mode, tap on the touch screen's **ElastoScan** button. Tap on the button once again to return to 2D Mode.

E Mode Screen

E Dual Mode

This mode displays elastography and 2D images on the screen at the same time. Tap Single/Dual on the touch screen to switch between Single and Dual Mode.

To facilitate comparative observation, the 2D image is shown on the left and an E image is shown on the right.

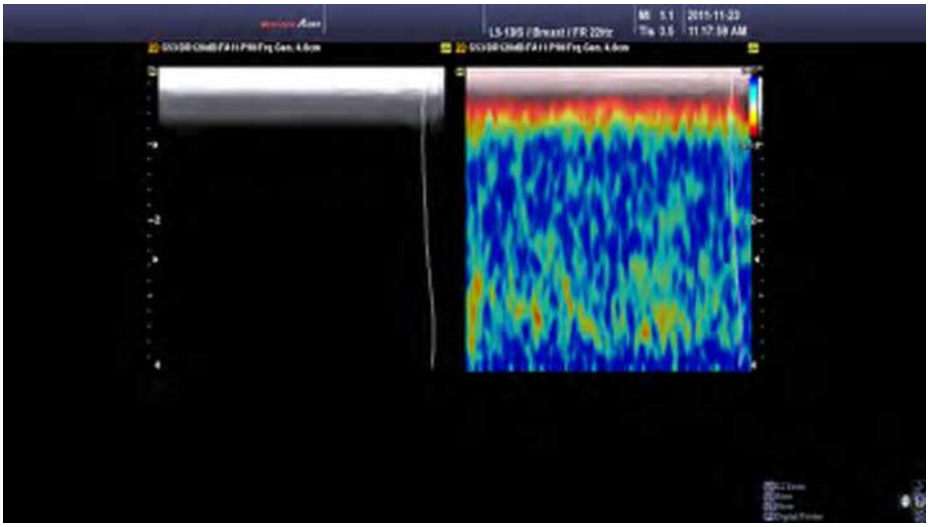

[Figure 4.20 Dual Mode]

E Single Mode

In E Single Mode, only an E image is displayed on the screen. Tap **Single/Dual** on the touch screen to select either Single or Dual Mode.

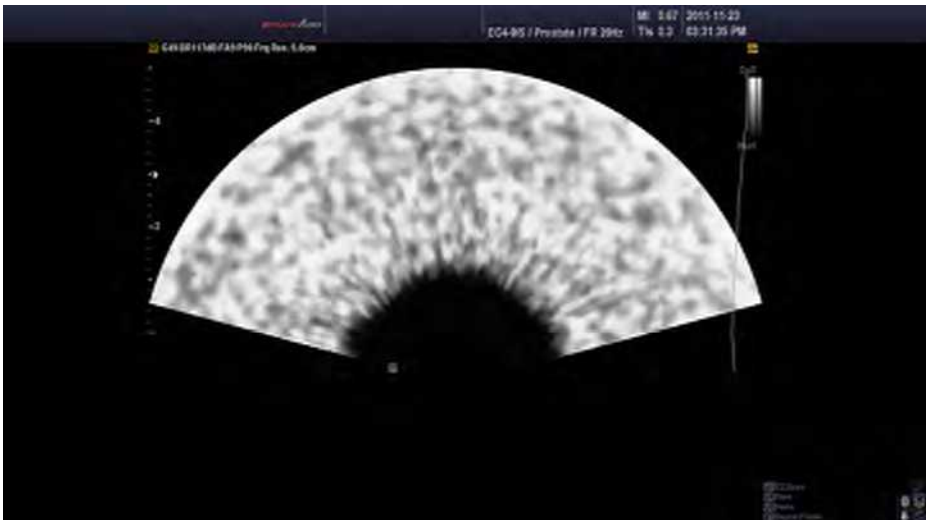

[Figure 4.21 E Single Mode]

ROI Mode

ROI stands for Region of Interest. In E Mode, the ROI Box represents the area where elasticity information is shown. Tap **ROI Mode** on the touch screen to enter or exit ROI Mode.

You can adjust the position and size of the ROI box by using the **Change** button on the control panel. Each time the **Change** button is pressed, the current status of the ROI Box is shown in the lower left corner of the screen.

- E ROI Pos.: The position of the ROI Box can be changed. Move the ROI Box with the Trackball to confirm the new position.
- E ROI Size: The size of the ROI Box can be changed. Resize the ROI Box with the Trackball and press the **Change** button to confirm the new size.

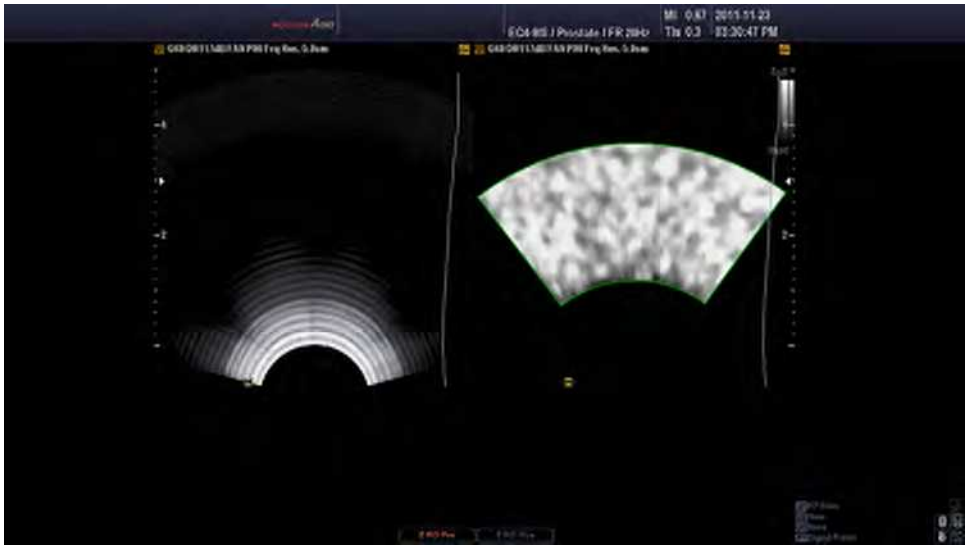

[Figure 4.22 ROI Mode]

NOTE: ROI Mode is available in E Single Mode as well as in E Dual Mode.

Scan Methods

When using ElastoScan, place a probe onto the surface of the area that you wish to observe and apply periodic compression to it. The compression should be adjusted so that the strain stays within 3 - 5 %.

Breast

A breast is a complex organ that consists of latecomer, laticifer, glandular mammaria, fatty tissues, fibrous tissues and chest muscles. Moving a probe along vertically causes unintended movements of the tissues. To observe a lesion in ElastoScan Mode (E Mode), it is recommended that you minimize lateral or other directional movements, including vertical movement of tissues along the axis.

Below are images of a breast tumor that were scanned in 2D and E modes.

a: b:

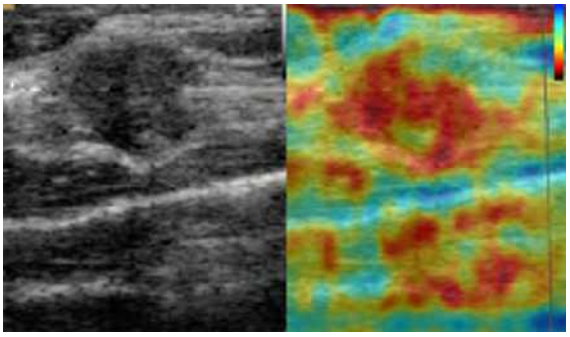

[Figure 4.23 Breast Tumor Images (a: 2D Mode, b: E Mode)]

Prostate

The prostate consists of tissues that are simpler than those of a breast, and there are relatively fewer unintended movements.

Below are images of a prostate tumor that were scanned in 2D and E modes.

a: b:

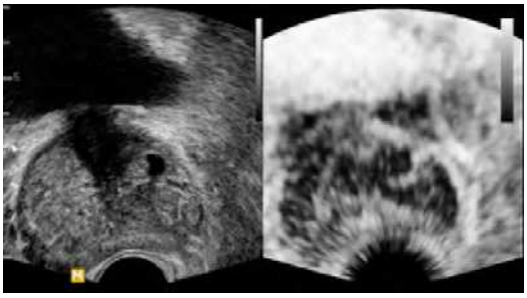

[Figure 4.24 Prostate Tumor Images (a: 2D Mode, b: E Mode)]

Screen Layout

Color Bar

In E Mode, the color bar indicates the stiffness of a tissue. Regardless of the color, the lower section of the bar indicates that the target area is stiffer than the surrounding tissues, and the upper section indicates that the target area is less stiff than the surrounding tissues.

E Mode Menu

[Figure 4.25 Touch screen for E Mode]

Invert Color Map

Tapping on the corresponding touch screen button inverts the color bar. Inverting the color bar also inverts the color displayed on the image.

Alpha Blending

Tap **Alpha Blending** on the touch screen to switch this function on or off.

Alpha Blending blends 2D and E images so that they appear to overlap with each other. Use **Blending Level** to adjust the blending ratio.

E Gain

Adjust the brightness of the E image between 1 - 100%.

Contrast

Used to adjust the contrast level of elastography images. Set to between 1 - 100%.

Enhancement

Adjusts the enhancement of the image. Select a value between 0% and 100% by tapping the button on the touch screen or using the dial-button. A higher value provides more accurate images of boundaries. However noise may increase according to the value.

Color Map Index

Used to adjust the coloration of elastography images. Select from Type 1 to Type 5 by tapping the corresponding button or using the dial-button on the touch screen. Changing the color map changes the color bar accordingly.

Blending Level

Select the ratio of Alpha Blending. Use the touch screen buttons or the dial-button to set this value to between 0% and 100%, in 1% increments. Setting it to 0% shows an E image only, and setting it to 100% shows a 2D image only.

Persistence Level

Specify the rate of change between frames. Use the touch screen buttons or the dial-button to set this value to between 0% and 100%, in 1% increments. The higher the value, the faster the rate of frame changes.

Tips!

Thyroid Scan Methods in E mode

- Motion Tracking Bar: Display the movements detected by the probe in real time for 4 seconds. The faster movements provides red color of Motion Tracking Bar. However the slower movements provides green color.
- ECI(Elasticity Contrast Index): Indicates the contrast level of elastography images using the adjustable ROI when the Freeze function is in effect. Specify the size of the ellipse, and adjust the size using the 8 points.

NOTE:

- The Following are not available or available only for limited use in E mode;
  - Unavailable functions: Angle, Scan Area, ECG Histogram.
  - Available only one Focus.
  - Available Biopsy On and Off only.
  - Only the measurements that can be performed in 2D mode (distance, circumference, area, and volume) are supported.
  - Thyroid scan in E mode is supported except North America.

Combined Mode

In Combined Mode, three different modes are combined, including the default 2D Mode. Note that in Dual Live Mode, only two modes are combined: 2D and Color Doppler.

2D/C/PW Mode

Color Doppler Mode and PW Spectral Doppler Mode are displayed simultaneously.

In Color Doppler Mode, press the **PW/z** dial-button on the control panel. Alternatively, while in PW Spectral Doppler Mode, press the control panel's **Color/Ref. Slice** dial-button.

2D/PD/PW Mode

Power Doppler Mode and PW Spectral Doppler Mode are displayed simultaneously.

In Power Doppler Mode, press the **PD/y** dial-button on the control panel. Or, in PW Spectral Doppler Mode, press the **PW/z** dial-button on the control panel.

2D/C/CW Mode

Color Doppler Mode and CW Spectral Doppler Mode are displayed simultaneously. This mode is available only with certain probes.

In Color Doppler Mode, press the **CW/LR** dial-button on the control panel. Alternatively, while in CW Spectral Doppler Mode, press the control panel's **Color/Ref. Slice** dial-button.

2D/PD/CW Mode

Power Doppler Mode and CW Spectral Doppler Mode are displayed simultaneously. This mode is available only with certain probes.

In Power Doppler Mode, press the **CW/LR** dial-button on the control panel. Or, in CW Spectral Doppler Mode, press the **PD/y** dial-button on the control panel.

2D/C/M Mode

Color Doppler Mode and M Mode are displayed simultaneously.

In Color Doppler Mode, press the **M/x** dial-button on the control panel. Alternatively, while in M Mode, press the control panel's **Color/Ref. Slice** dial-button. (**Color/Ref. Slice** button is only enabled for specific diagnostic applications with specific probes.)

Dual Live Mode

2D Mode and Color Doppler Mode are displayed simultaneously. While in 2D Mode or C Mode, select **Dual Live** on the touch screen.

2D/TDI/TDW

NOTE: This function can only be used with Phased Array Probe and cardiac application.

TDI Mode and TDW Mode are displayed simultaneously. Tap **TDI** on the touch screen in PD Mode or Color Doppler Mode, and then press the **PW/z** dial-button.

Changing Combined Mode Format

Changing the active image mode

Press the **Set** button on the control panel. The current active image mode - 'D Only' or '2D Only' - is displayed above the menu on the screen.

In Combined Mode, more than two image modes are used at the same time. The image mode currently in use is called 'Active Image Mode.' For example, if Sample Volume is moved with the Trackball in 2D/C/PW Mode, PW Spectral Doppler Mode becomes the current active image mode.

Because the menu and button options vary depending on the active image mode, use the **Set** button change the active image mode.

Note that the active image mode cannot be changed with the **Set** button when the Freeze function is in effect.

Changing menu

You can change the menu and touch screen menu items without changing the active image mode. The buttons on the control panel depend on the active image mode.

For example, when the touch screen menu for 2D mode is displayed on the screen in 2D/C/PW mode, you can select another mode on the touch screen menu to switch to it.

NOTE: For instructions on optimizing the images in combined mode, refer to the Basic Mode section.

MULTI-IMAGE MODE

The product supports Dual Mode and Quad Mode.

In Multi-Image Mode, an image can be displayed in different combined modes. Button operations in an active area are the same as in Combined Mode.

Dual Mode

Press the **Dual** button on the touch screen.

You can compare two different images at the same time. Each time you press the **Dual** button, one of the two images is selected. The current active image mode is displayed as a yellow line at the top. The button controls and menus of the active image mode are used.

To exit from Dual Mode, tap on the touch screen's **Single** button or press the **2D** dial-button.

[Figure 4.26 Dual mode]

Quad Mode

Press the **Quad** button on the touch screen.

You can compare four different images at the same time. Each time you press the **Quad** button, one of the four images is selected. The current active image mode is displayed as a yellow line at the top. The button controls and menus of the active image mode are used.

To exit from Quad Mode, tap on the touch screen's **Single** button or press the **2D** dial-button.

[Figure 4.27 Quad mode]

Tips!

Multi-Image Mode Screen Layout

In Multi-Image Mode, recent Cine images are displayed on the screen by default.

▶ **Dual Mode**

Tap on the touch screen's **Dual** button to display the current Cine image and the most recent Cine image in the order of ❶ → ❷.

▶ **Quad Mode**

Tap on the touch screen's **Quad** button to display the current Cine image and the three most recent Cine images in the order of ❶ → ❷ → ❸ → ❹.

NOTE: For instructions on optimizing the images in Multi-Image Mode, refer to the Basic Mode section.

3D/4D Mode

These modes show 3D images of the region being examined. ACCUVIX A30 provides both 3D Mode and 4D Mode (optional).

NOTE:

- Standard probes cannot be used for 3D/4D Modes.
- This manual has been prepared based on the 3D MXI Upgrade.

Entering and Exiting 3D/4D Mode

Press the **3D/4D** button on the control panel. Press it again to exit 3D/4D Mode and return to 2D Mode.

3D/4D Mode Screen

ROI Box

In 3D/4D Mode, the ROI box is also referred to as the volume box. It indicates the area for conversion into a 3D/4D image.

You can adjust the position and size of the ROI box by using the **Change** button on the control panel. Each time the **Change** button is pressed, the state of the ROI box is displayed in the lower middle part of the screen as follows:

- ROI Position: In this state, the position of the ROI box can be changed. You can move the ROI box using the trackball.
- ROI Size: In this state, the size of the ROI box can be changed. After resizing the ROI box with the trackball, press the **Change** button to confirm the new size.

3D Mode

You can capture 3D images using a 3D probe. This product provides 3D Mode and XI STIC.

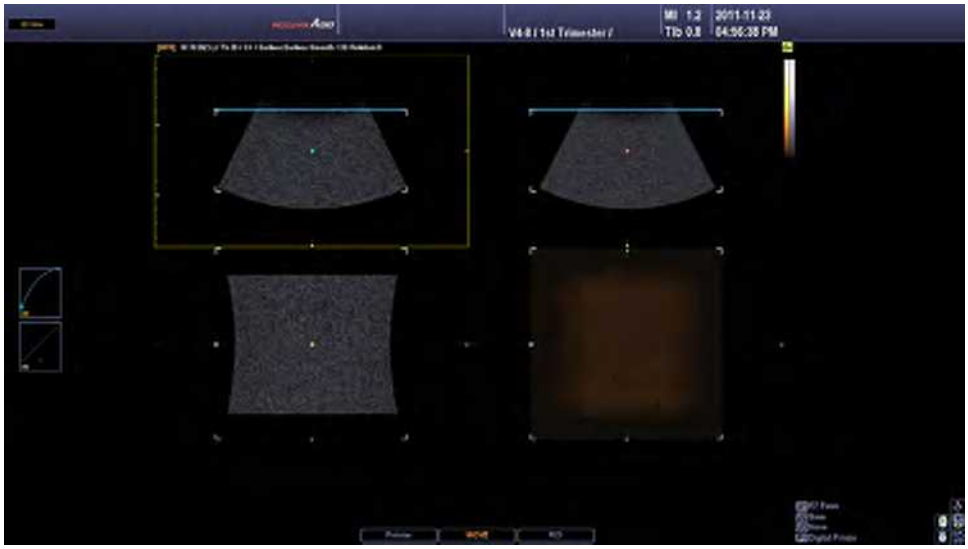

[Figure 4.28 3D Mode]

3D

In this mode, you can capture 3D images using a 3D probe.

XI STIC

In this mode, fetal cardiac cycle and STIC volume data can be obtained with 3D probes. For more information, please refer to 'XI STIC' in this chapter.

NOTE: XI STIC is an optional feature of this product.

Tips!

Color 3D Mode

With ACCUVIX A30, 3D Mode can be used in combination with Color Doppler or Power Doppler Mode.

- 3D/C Mode: Press the **3D/4D** button in Color Doppler Mode. Along with a 3D image of the observation area, the speed and direction of blood flow will be shown in color.
- 3D/PD Mode: Press the **3D/4D** button in Power Doppler Mode. Along with a 3D image of the observation area, the presence and amount of blood flow will be shown in color.

4D Mode (Optional)

In 4D Mode, 3D images can be obtained in real time with 3D probes. This mode is also called Live 3D Mode.

NOTE: 4D Mode is an optional feature of this product.

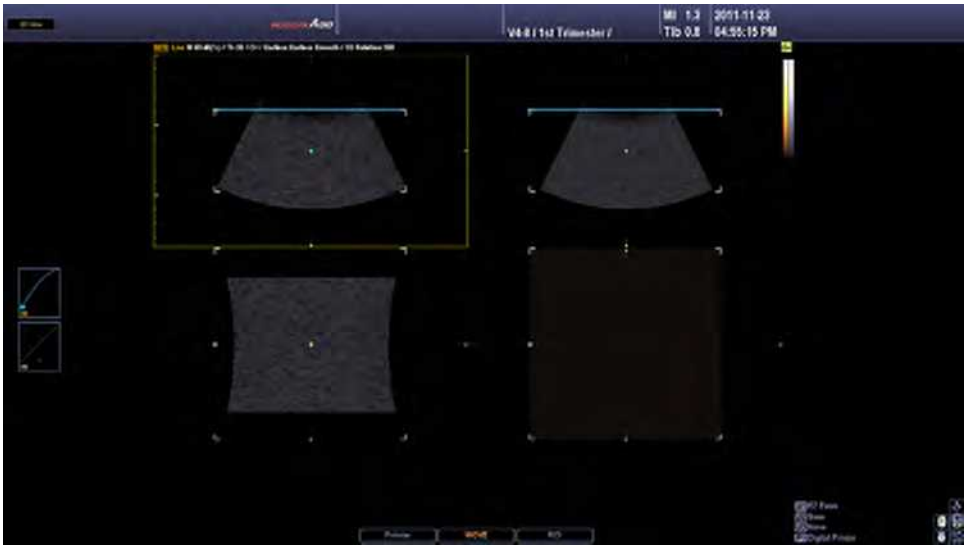

[Figure 4.29 D Mode]

Acquiring 3D/4D Images

1. Specify the location and size of the ROI Box as desired.
2. Set the required parameters in the *3D Stand By* screen on the touch screen.
   - ▶ Select the Menu tab and go to View Mode → Rendering Preset → Miscellaneous and configure the options.
3. Press the **Freeze** or **Set** button on the control panel. The system will start acquiring 3D images.
4. Once 3D images are acquired, the *3D View* or *3D XI* screen is displayed.
   - ▶ If a horizontally-reversed 3D image is obtained, the image will also be shown horizontally-reversed in *3D View* or *3D XI*.
5. Optimize the acquired images as needed for diagnosis. Press the **3D/4D** button to acquire 3D images again.

Tips!

How to Improve 3D Image Quality

- ▶ Consider the direction, size and section of the viewpoint as well as the visibility of an object.
- ▶ Before acquiring 3D images, adjust the contrast in 2D Mode.
- ▶ The bigger the ROI box, the slower the rendering speed. Therefore, set an appropriate ROI box size.
- ▶ To see the 3D image of a fetus in frontal view, position the fetal head in the direction of the Direction Mark, putting it in the coronal plane. Then scan the fetus from back to abdomen.
- ▶ The 3D image of a fetal face can be more easily located in the coronal plane than in the Sagittal plane.
- ▶ To determine surface contour, subjects such as amniotic fluid that do not generate echoes should be insulated with hypo-echoic textures.
- ▶ To clean up an acquired 3D image, adjust the Low-Threshold level. The general rule is not to adjust High Threshold; set it to the maximum value of 255.

NOTE: You can cancel a scan job by pressing the **Exit** button.

3D Stand By

This screen is displayed on the touch screen when 3D/4D Modes are entered. Set the required parameters to specify how 3D images are acquired.

[Figure 4.30 3D Stand By – Touch Screen]

Menu Tab

Select a tab for 3D/4D Modes. The tabs that are enabled on the touch screen vary depending on the probe being used and whether Color 3D Mode is enabled.

▶ In Color 3D Mode, only the **3D** or **XI STIC** tab is enabled.

Tips!

Adjusting 2D Images in 3D/4D Modes

Tap the **2D Menu** tab on the touch screen to optimize a 2D image before acquiring the corresponding 3D image.

Once the 2D image is optimized, tap the **3D Menu** tab on the touch screen to return to 3D Stand By Mode.

View Mode

Select a view mode to use after 3D images are acquired.

3D View

The standard view mode for 3D image review. Press **MPR**.

3D XI

NOTE: 3D XI is an optional feature of this product.

The view mode for 3D XI image review. Select either **MSV** or **Oblique View**. For more information, please refer to '3D XI Mode.'

Rendering Preset

Select a preset for the 3D image. For detailed instructions, refer to the Preset information in the section covering 3D View-MPR Mode.

Auto ROI

NOTE: Auto ROI is only available under the OB application.

Tap the corresponding button on the touch screen to turn Auto ROI on or off. If it is turned on, the ROI box will be automatically placed in the area that will be converted to a 3D image.

When Auto ROI is used, the following should be taken into account:

- Only images of the fetal body can be acquired.
- Once Auto ROI is turned on, the position or size of the ROI box cannot be changed.
- Auto ROI selection is affected by the brightness or contrast of 2D images.
- Auto ROI is not available in Color 3D Mode.

ROI Curve

NOTE:

- It cannot be used when OH (Orientation Help) is on.
- It is supported when the Render Direction is 'C+'.
- It is supported in **Dual** and **Quad** modes.

Press the **Curved ROI** button to turn it on or off. If set to On, adjust the ROI Line in the form of a curve to select the rendering area.

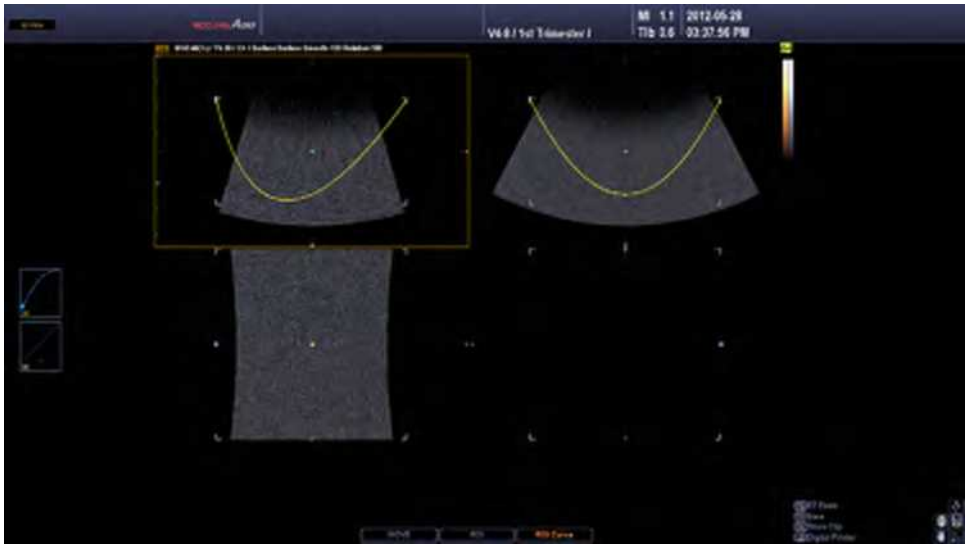

[Figure 4.31 ROI Curve]

Scan Quality

NOTE: Scan Quality is not available under the XI STIC menu tab.

Set the quality of 3D images by tapping the corresponding button or using the dial-button on the touch screen.

- High: Lower quality than Medium setting, but faster.
- Medium: Image quality is better than High setting, but speed is lower.
- Low: Very good image quality. Used when it is necessary to observe precise images.

Scan Angle

Set the scan angle by tapping the touch screen or using the dial-button. The angle range varies depending on the probe in use.

NOTE:

- In **XI STIC**, set the scan angle between 15° and 60°.
- In NT preset, set the scan angle between 40° and 50°.

ScanTime

Set the image acquisition time. Select a value between 7s and 15s by tapping the corresponding button on the touch screen or using the dial-button. The ScanTime button is only enabled in XI STIC.

NOTE: For more information, refer to the XI STIC section.

Trimester

Set the pregnancy trimester. Select from 1st, 2nd and 3rd by tapping the corresponding button on the touch screen or using the dial-button. The Trimester button is only enabled in XI STIC.

NOTE: For more information, refer to the XI STIC section.

3D View - MPR

This view mode is enabled upon acquisition of images when **MPR** is selected in *3D Stand By*. The 3D View indicator appears in the upper left corner of the screen, and 3D images are displayed in **MPR**.

You can optimize 3D images, perform diagnosis, and take measurements.

Tips!

Changing View Mode

Select the 3D Menu tab on the touch screen to change the view mode.

The Basics of 3D View Mode

Screen Layout

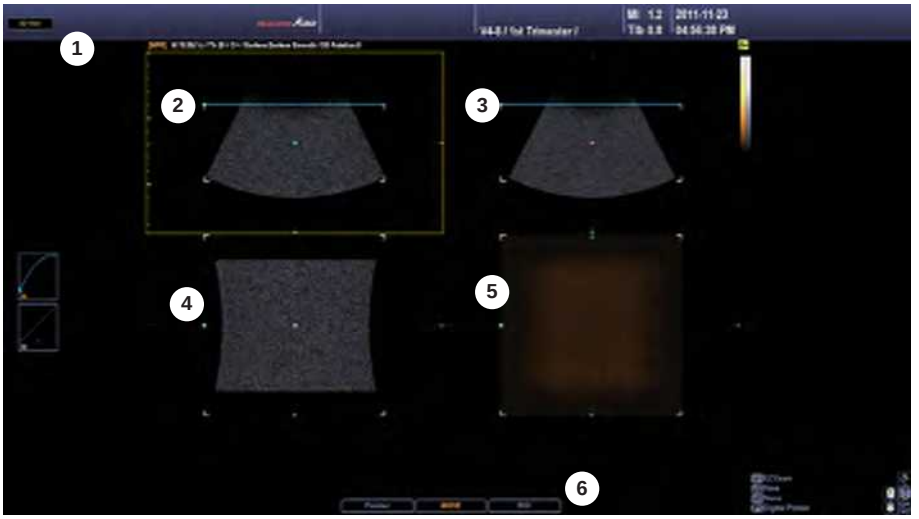

[Figure 4.32 3D View]

❶ In MPR Mode, Mix, Threshold Low, Render Direction, and Render Mode 1, 2 are displayed together with the present mode in the 3D image information.
3D Image Information: The present 3D mode and image information are displayed on the monitor. You can switch the display on or off by pressing the spacebar of the keyboard.

❷ A Plane: Axial Section Image

❸ B Plane: Sagittal Section Image

❹ C Plane: Coronal Section Image

❺ 3D Image

❻ Trackball status indication: The current status of the trackball appears at the bottom of the screen. You can select Pointer, Move, or ROI for trackball. Press the **Change** button on the control panel to change the trackball state. The trackball state changes sequentially each time the button is pressed.

- ▶ Move: Move 3D images with the trackball. The acquired 3D image moves as you move the trackball.
- ▶ ROI: You can resize the ROI box with the trackball. The ROI box on the 3D image is resized as you move the trackball.
- ▶ Pointer: You can reposition the ROI box. Pressing the **Pointer** button on the control panel switches to Pointer state. You can rotate the ROI box around the image axis by using the pointer while pressing the **Set** button. Press the **Change** button again to switch to another state.

■ Touch Screen Layout

Only the buttons that are available in the current mode are enabled.

[Figure 4.33 3D View Menu]

❶ 3D Menu

❷ 3D Utility Menu: This menu appears vertically at the right side of the touch screen. You can move to another page using the ← and → buttons above the Utility Menu. For more details, see 3D Utility Menu in this chapter.

Zooming In/Out Image

Turn the **Zoom** dial-button on the control panel to zoom in/out of images. The current zoom factor appears on the left side of the screen.

Adjusting ROI's Top and Bottom Margins

Use the **Angle/TB** dial-button on the control panel to adjust the top and bottom margins of the ROI. TB is an abbreviation for Top-Bottom.

Adjusting ROI's Left and Right Margins

Use the **CW/LR** dial-button on the control panel to adjust the left and right side margins of the ROI. LR is an abbreviation for Left-Right.

Ref. Slice

From the control panel, use the **Color/Ref. Slice** dial-button to move the Reference Slice to the left and the right in parallel.

Niche Zoom

NOTE: This option is available with **VCT**.

Use the **Zoom** dial-button on the control panel. Pressing the dial-button activates the Niche zoom feature. Turn the dial-button to zoom in/out of VCT images. The current niche zoom factor appears on the left side of the screen.

Rotating Image by X-axis

Use the **M/x** dial-button on the control panel.

Rotating Image by Y-axis

Use the **PD/y** dial-button on the control panel.

Rotating Image by Z-axis

Use the **PW/z** dial-button on the control panel.

Measurements by Application

NOTE:

- Measurements can only be taken for images in MPR, MSV or 4D Mode.
- Only the **SONOVIEW**, **Patient**, and **Report** buttons are available during measurement.

Press the **Calculator** button on the control panel. Measurement-taking methods are identical to those described in 'Chapter 5. Measurements and Calculations'.

Basic Measurement

Press the **Caliper** button on the control panel. For more details, refer to the Basic Measurements section of 'Chapter 5. Measurements and Calculations'.

Entering Text

Press the **Annotation** button on the touch screen. Enabling Quick Text changes keyboard input into text mode. For more information, refer to the Text Input section of 'Chapter 6. Image Management'.

Entering Indicator

Tap **Annotation** on the touch screen and then press a button for which an Indicator can be set. For more information, refer to the Indicator Input section of 'Chapter 6. Image Management'.

NOTE: Calculator and **Caliper** options cannot be used in any of the modes.

Saving Images

NOTE: If volume data contains both 4D and 3D Cine images, you can choose to save in either 4D or 3D.

1. Press the **Save** button on the control panel. The 3D Data Save screen is displayed on the touch screen.
2. Specify settings such as Data Type, Save Item, and Volume Format.
3. Tap **Acquire** on the touch screen to save the image. Press **Cancel** to cancel.

Tips!

Volume Data

1. If volume data contains a Cine image, it is saved at the same time.
2. If images are saved with volume data, they can be converted to new 3D rendering images with SONOVIEW.

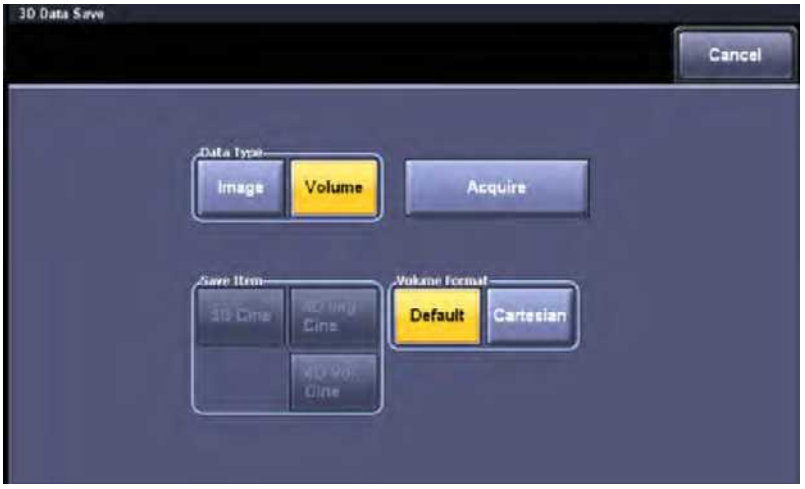

[Figure 4.34 3D Data Save]

Printing Image

Press the **Print** button on the control panel.

Mode

Select the display format in which 3D images are presented.

Render

Shows Axial, Sagittal and Coronal plane images and 3D image.

VCT

Displays Axial, Sagittal and Coronal plane images, as well as combinations of the three. Each plane is displayed with a different colored frame. VCT is an abbreviation for Volume CT.

2D

Axial, Sagittal and Coronal plane images, along with OH (Orientation Help), are displayed on the screen. OH indicates the relative position of the currently selected plane with respect to the volume data.

Tips! Tap **Single** on the touch screen for a more detailed view.

Display Format

Use the touch screen to select the Display Format.

- Single: Displays the 3D image in full screen view.
- Dual: Displays one 2D image and one 3D image.
- Quad: Displays all 2D and 3D images.

NOTE: In **2D** or **VCT** mode, the only available options are Single and Quad Formats.

Ref. Image

Select a reference image from A, B, or C by tapping the corresponding button on the touch screen. The selected image will be highlighted with orange borders.

- A: Axial Section
- B: Sagittal Section
- C: Coronal Section

OH

NOTE: Available in **Render** and **2D**.

Tap the button on the touch screen to turn this feature on or off. If it is turned on, a 3D image will be displayed along with OH. OH is an abbreviation for Orientation Help.

3D Rotation

NOTE: This option is available with **Render**.

Select -90°, 90° or 180° by tapping the button on the touch screen. Rotation is achieved based on the current 3D image.

Init

Tap on the touch screen button to reset the 3D image's position data.

FAD

Automatically detects the face of the fetus and removes the images of any limbs that obscure the face.

FAD stands for Fetal Face Auto Detection.

VSI

Displays a realistic image by using depth and intensity information. When **Surface** or **Surface Smooth** is enabled in Render Mode 1, Shading is enabled in Render Mode 2.

VSI stands for Volume Shading Imaging.

Accept ROI

NOTE: Available in **Render** and **Mirror View**.

Tap the button on the touch screen to turn it on or off. If it is turned on, ROI will not be displayed.

Mix

NOTE: This option is available with **Render**.

Set the combination of Render Modes 1 and 2. Select a value between 0:100 and 100:0(%) by tapping the button on the touch screen or using the dial-button. For more information about the Render mode, refer to the Render Setup details in the section covering the 3D Utility Menu.

Th.Low

NOTE: This option is available with **Render**.

Specify the minimum threshold value. Select an index between 0 - 254 by tapping the desired button or using the dial-button on the touch screen.

Tips!

Threshold

This option allows you to adjust the threshold value in order to eliminate unnecessary data from images. As the number increases, cyst elements become more apparent. As the number decreases, bone elements become more apparent.

Select

Select Post Curve. Select from 2D or 3D by tapping the corresponding button on the touch screen or using the dial-button.

NOTE: In **Mirror View**, the Select function is only enabled in Color 3D mode.

Position

Set the position of the post curve selected with the **Select** function. Select an index between 0 - 100 by tapping the desired button or using the dial-button on the touch screen.

Bias

Set the bias of the post curve selected with the **Select** function. Select a value between -100 and 100 by tapping a button on the touch screen or using the dial-button.

Tips!

Initializing Post Curve

When the trackball is in Pointer state, you can double-click Post Curve at the left side of the screen to initialize the Post Curve.

Transparency

NOTE: This option is available with **Render**.

Set the transparency of a 3D image. Select a value between 20 and 250 by tapping a button on the touch screen or using the dial-button.

The lowest value (20) is for complete transparency, and the highest value (250) is for complete opacity.

DMR+

NOTE: For more information on DMR+ and DMR+ Index, refer to the 2D Mode Menu in this Chapter.

DMR+ removes the noise in images and intensifies boundary lines to make images more vivid. Five predefined indexes are available.

If it is turned on, **DMR+ Index** is enabled on the touch screen.

DMR+ Index

Tap **DMR+ Index** on the touch screen. Select an index between 1 and 5 by tapping the button on the touch screen or using the dial-button.

HDVI

NOTE: HDVI is an optional feature of this product.

HDVI filters 3D images to express outlines more vividly and improve images. Five predefined indexes are available.

HDVI Index

Tap **HDVI Index** on the touch screen. Select an index between 1 and 5 by tapping the button on the touch screen or using the dial-button.

HDVI Type

You can choose the measurement site from among Face, Brain, Early OB, Heart, Spine, Gyn, Breast, Thyroid, Carotid, Abdomen, and Kidney by tapping the button on the touch screen to adjust the image.

NOTE: The DMR and HDVI options are enabled in MPR, MSV, or Oblique View modes.

NOTE:

- The following 3D Utility Menu items are enabled in MPR mode: Mirror View, 3D Cine, 4D Cine, Auto Contour, Contour Edit, Volume Slice, NTD, Post Processing, Render Setup, Preset, and Chroma.
- For more information on 3D Utility, see the 3D Utility Menu.

VOCAL

Measure the volume of tissues within the human body. VOCAL is an acronym for Virtual Organ Computer Aided anaLysis.

VOCAL can be performed in the following order: VOCAL Define → VOCAL Edit → VOCAL.

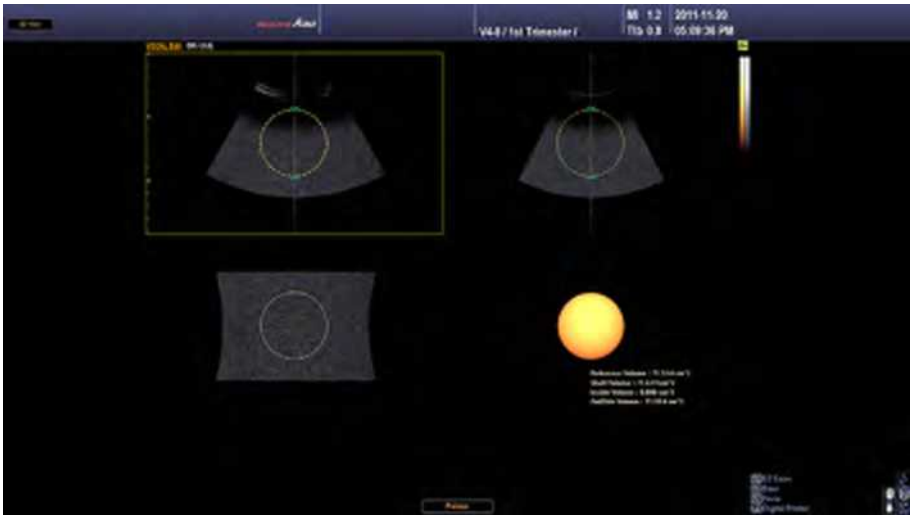

[Figure 4.35 VOCAL]

VOCAL Define

Specify the settings required for VOCAL execution. Information on the current mode, contour type and step angle is displayed in the 3D image information area.

[Figure 4.36 VOCAL Define Image Information]

Contour Type

Select the contour line type. A contour line is automatically created for all types except **Manual**.

Solid

Used for object data with many echoes.

General

Draw a contour line based on a typical object. It is faster than other automatic contour types, but less accurate.

Prostate

Used for prostate data.

Cystic

Used for object data with fewer echoes.

Sphere

After creating a spherical object, edit its contour to make it into the desired shape.

Manual

Create the desired shape of an object manually.

Ref. Image

Select a reference image from A, B, or C by tapping the corresponding button on the touch screen. The selected image will be highlighted with orange borders.

Step Angle

Set the rotation angle. Select from 12, 18 or 30 by tapping the corresponding button on the touch screen.

Pole Point Move Using Trackball

Set the particular area where you want to perform VOCAL in a reference image. In a reference image, Pole 1 and Pole 2 respectively refer to top and bottom arrow positions.

Tap **Pole1** and **Pole2** on the touch screen, and then use the trackball on the control panel to set the area that you want to use VOCAL on.

Or, tap **None**, and then use the dial-button on the touch screen.

Init

Tap on the corresponding touch screen button to reset the 3D image's position data.

Start

Tap the corresponding button on the touch screen to begin creation of VOCAL data.

Tips!

When Contour Type is set to Manual

1. Tap **Start** on the touch screen. The *Image Position* screen will be displayed on the touch screen.
2. After tapping the **Set** button that appears over an image on the screen, move the trackball to create a contour.
   – Tap **Next** to move to the next frame.
   – Tap **Previous** to move to the previous frame.
3. Tap **Done** on the touch screen. Start VOCAL.
   – If you tap **Done** without contouring, VOCAL is performed over a sphere.

[Figure 4.37 VOCAL Define – Touch Screen]

VOCAL Edit

Once VOCAL data is created, volume information will be displayed on the screen. In VOCAL Edit Mode, you can modify or redraw the existing contour lines.

The current mode, Shell Mode and current frame number out of the total number of frames (e.g. 5/10) are displayed in 3D Image Data.

[Figure 4.38 VOCAL Edit Image Information]

Shell Mode

Set the shell of an object based on its contour line.

Off

Do not use Shell Mode. The created contour and the shell overlap.

Inside

A shell of the thickness specified by the Shell Thick. setting is drawn inside the generated contour.

Outside

A shell of the thickness specified by the Shell Thick. setting is drawn outside the generated contour.

Symmetric

Half of the shell is drawn inside the contour and the other half is drawn outside the contour, with each measuring half of the Shell Thick. specified.

Shell Thick.

Set the shell thickness of an object. Select a value between 1 and 20mm by tapping the Shell Thick button on the touch screen or using the dial-button. This option only appears on the touch screen when Shell Mode is used.

Image Position

Review the contour lines for each frame. Use **Previous** and **Next** to move through frames.

Multi Edit

Modify more than one contour line at once. Tap the corresponding button on the touch screen to turn this setting on or off. If it is turned on, up to 6 contour lines can be displayed simultaneously on the screen. When there are more than 6 lines, use the **MEV Page** dial-button to navigate through pages. MEV is an abbreviation for Multi Edit View.

Use **Pole 1** and **Pole 2** to edit contour lines. You can also use the trackball and the **Set** button on the control panel to edit contour lines. Once editing is complete, tap **Multi Edit** again to turn it off.

Clear Contour

When you tap the **Clear Contour** button on the touch screen, the VOCAL data are deleted, the settings are maintained, and the VOCAL Define step is displayed on the screen.

New Contour

When you tap the **New Contour** button on the touch screen, the VOCAL data and settings are all deleted and the initial setting stage of VOCAL Define is displayed on the screen.

Accept Contour

Tap the corresponding button on the touch screen to apply changes to the contour. The system will switch to the Review VOCAL Data screen.

[Figure 4.39 VOCAL Edit – Touch Screen]

VOCAL

Optimize VOCAL data for review. Information on the current mode and display format is shown in the 3D image information area.

[Figure 4.40 VOCAL Image Information]

Mode

Specify how VOCAL data are presented.

■ ROI 3D

Shows images in the Axial, Sagittal and Coronal planes, and VOCAL data.

■ Fixed 3D

Shows images in the Axial, Sagittal and Coronal planes, and 3D images for VOCAL data.

■ VCT

Shows combinations of images in the Axial, Sagittal and Coronal planes and VOCAL data.

Display Format

When you tap the **Display Format** button on the touch screen and select **Single** or **Quad**, the VOCAL data are displayed in full screen. This can be used in every mode. When you tap the **Display Format** button again, the display returns to the previous screen.

Ref. Image

Select a reference image from A, B, or C by tapping the corresponding button on the touch screen. The selected image will be highlighted with orange borders.

VOCAL Edit

Tap the corresponding button on the touch screen to return to the VOCAL Edit stage.

Init

Tap on the touch screen button to reset the 3D image's position data.

Histogram

NOTE: Histogram is only available for 2D and Power Doppler 3D images.

A shell histogram is calculated and displayed on the screen.

It represents the gray value distribution within the 2D and Power Doppler images of an object for which VOCAL is performed. It also indicates Mean Gray (MG), Vascularization Index (VI), Flow Index (FI) and Vascularization Flow Index (VFI).

Tips!

Formula for Shell Histogram:

- MG: The average value of gray voxel brightness (gray)

  MG = The sum of brightness (gray) / The total number of voxels
- VI: The ratio of color voxels to all voxels within the shell

  VI = The number of color voxels / The total number of voxels
- FI: The average value of brightness (color) for color voxels within the shell

  FI = The sum of brightness (color) / The total number of color voxels
- VFI: The average value of brightness (color) for all voxels within the shell

  VFI = The sum of brightness (color) / The total number of voxels

Niche

NOTE: This option is available with **Volume CT**.

Select from Type 1 to Type 8 by tapping the corresponding button on the touch screen or using the dial-button.

Mode

NOTE: This option is available with **ROI 3D**.

Specify how the surface of VOCAL data is presented. Select Surface or Wireframe by clicking the corresponding button or using the dial-button on the touch screen.

- Surface: VOCAL data are represented using the method of expressing the exterior of images by curves.
- Wireframe: VOCAL data are represented by dots and lines.

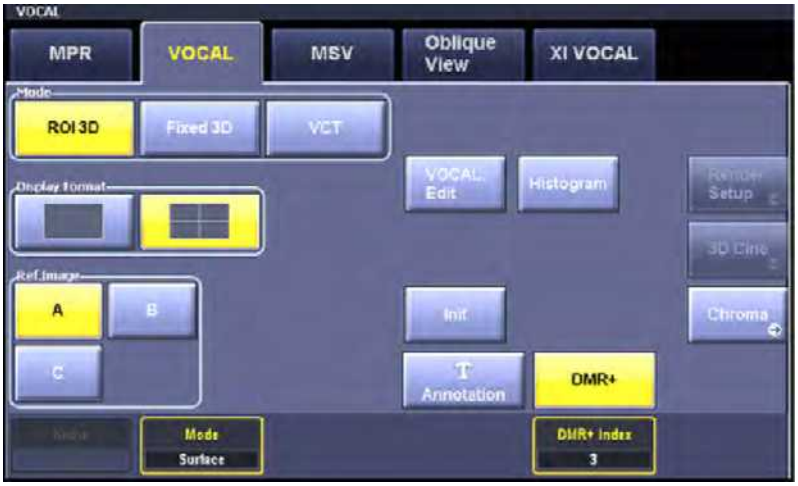

[Figure 4.41 VOCAL – Touch Screen]

NOTE:

- The following 3D Utility Menu items are enabled in VOCAL mode: Render Setup, 3D Cine, and Chroma
- For more information on 3D Utility, see the 3D Utility Menu.

3D XI

NOTE:

- 3D XI is an optional feature of this product.
- 3D XI is only available when 3D probes are used.

This view mode is enabled if 3D image acquisition is completed when **MSV** or **Oblique View** is selected in *3D Stand By*. '3D XI' is shown in the upper left corner of the screen.

An image can be viewed in multiple slices.

MSV

An image can be viewed in multiple slices. MSV is an abbreviation for Multi-Slice View.

[Figure 4.42 Multi Slice View]

NOTE: Functions such as **Calculator** and **Caliper** can be used.

MSV Screen

The images sliced at the thickness set in **Slice Thick**. are displayed on the screen. Slice Number/Total Slices is shown at the bottom of each slice. The currently selected slice image is indicated by an orange contour.

The image information displays the current mode, Ref.Image, and Slice Thick. The *3D XI-MSV* screen is displayed on the touch screen.

Rotating Image

Rotating the reference plane affects all planes.

- X-axis Rotation: Use the **M/x** dial-button on the control panel. After the trackball goes into the pointer state, move the trackball near the X-axis of the image.
- Y-axis Rotation: Use the **PD/y** dial-button on the control panel. After the trackball goes into the pointer state, move the trackball near the Y-axis of the image.
- Z-axis Rotation: Use the **PW/z** dial-button on the control panel. After the trackball goes into the pointer state, move the trackball near the Z-axis of the image.

Moving Image

Set the trackball to Move Mode, and then move it up/down/left/right. Move the image to the X- and Y-axes on the coordinate system.

[Figure 4.43 Multi Slice View – Touch Screen]

Display Format

Set the layout of slice images. Select from 1*1, 2*1, 2*2, 3*2, 3*3 or 4*3 by tapping the corresponding button on the touch screen. The number of slices that can be displayed simultaneously on the screen varies based on this setting. If the layout is changed, the currently selected slice image moves to the first position on the screen.

Ref. Image

Select a reference image from A, B, or C by tapping the corresponding button on the touch screen.

MSV OH

Tap the corresponding button on the touch screen to turn this function on or off. If it is turned on, then the A, B, and C planes of the selected slice image will be displayed on the screen. The selected slice and reference images will be highlighted with orange borders.

Previous / Next

Change the page on the screen. This option can be useful when the total number of slice images exceeds the number allowed by the current **Display Format**. Select a page by tapping the **Previous** and **Next** buttons on the touch screen or using the dial-button.

Selected Slice

Select a slice image to observe. Select a slice by tapping the button on the touch screen or using the dial-button. The selected slice will be highlighted with orange borders.

Slice Thick.

NOTE: The Slice Thick. represents the slice width in volume data, rather than the actual anatomical position.

Set the cut depth of images. Select a value from 0.5, 1.0, 2.0, 3.0, 4.0, 5.0 or 10.0mm by tapping the corresponding button on the touch screen or using the dial-button. Depending on your selection, the number of slices and pages will vary.

Position

Set the position of the post curve. Select an index between 0 - 100 by tapping the desired button or using the dial-button on the touch screen.

Bias

Set the bias of the post curve. Select a value between -100 and 100 by tapping a button on the touch screen or using the dial-button.

Ruler

Set the position of the ruler. Select from None, Right, Left, Top, Bottom, or All by tapping the corresponding button on the touch screen or using the dial-button.

NOTE: The following 3D Utility Menu items are enabled in MSV mode: Orientation Dot, 3D CI, Chroma, 4D Cine, Volume CT, Post Processing, Auto Contrast, Negative, Preset.

For more information, refer to the 3D Utility Menu section.

Oblique View

After drawing a straight or curved line in the selected image in MSV Mode, you can observe the related oblique image. To do this, follow the procedure below:

1. Select **Display Format** and then specify the number of oblique images for observation.
2. Set **Oblique Cut Type**.
3. Draw a straight or curved line in a reference image by using the trackball and the **Set** button. An oblique image will appear with the start (S) and end (E) points shown.
   - ▶ If the Cut Type is Line and the trackball is in Move Mode, the position of the line can be changed.
4. Optimize the image for observation by using other buttons on the touch screen

NOTE: When Display Format is 2*1, measurement functions such as **Calculator** and **Caliper** can be used.

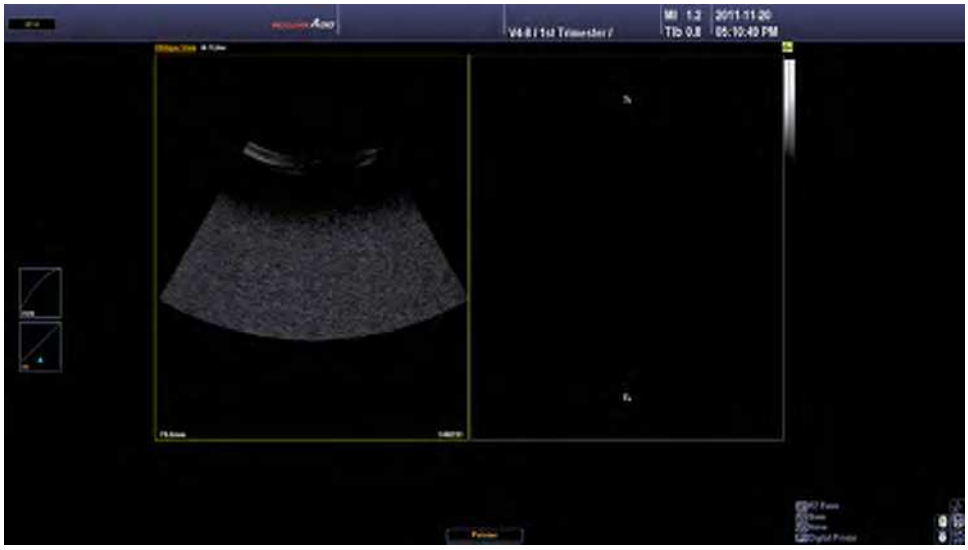

[Figure 4.44 Oblique View]

Oblique View Screen

The reference image that is selected in MSV Mode is displayed on the screen. The reference image is highlighted with orange borders and always placed in the upper left corner of the screen.

When more than one line is used for observation, each line is indicated by a different color and number.

The image information displays the current mode, Ref.Image, Oblique Cut Type, and Plumb Size (or Slice Thick.). The *3D XI-Oblique View* screen is displayed on the touch screen.

NOTE: When **OVIX** is used, the image information also displays OVIX Line Offset, Mix, Threshold Low, and Render Mode 1, 2.

Tips!

Direction of View of Oblique Image

The observer is located perpendicular to the section of a reference image. Please see the view direction below:

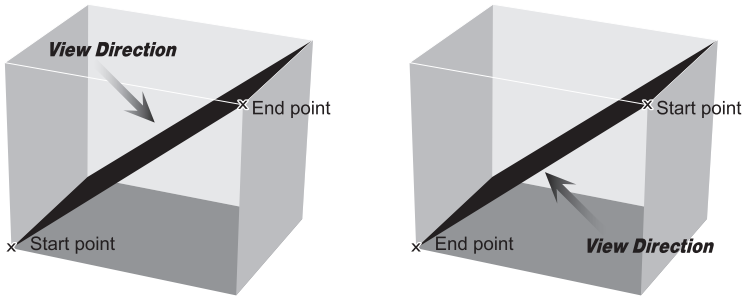

Display Format

Set the layout of the oblique images. Select from 2x1, 3x2 or 3x3 by tapping the corresponding button on the touch screen. Depending on this setting, the number of oblique images and the Oblique Cut Type will vary.

Oblique Cut Type

Specify how images are cut by tapping the corresponding button on the touch screen.

Line

The oblique image of a straight line can be observed.

Contour

The oblique image of a curved line or contour line can be observed.

Tips!

Multi Line & Multi Contour

If **Display Format** is set to 3x2 or 3x3, enable **Auto Increment** to draw more than one line.

Multi Parallel

NOTE: This cannot be used when **Display Format** is 2*1.

The oblique image of a straight line and its parallel lines can be observed. If a straight line is drawn, its parallel lines are automatically shown on the screen.

Multi Plumb

NOTE: This cannot be used when **Display Format** is 2*1.

The oblique image of a straight line and its perpendicular lines can be observed. If a straight line is drawn, its perpendicular lines are automatically shown on the screen.

Image Rotation

Specify the direction of an oblique image. Select 90°, 180°, or -90°, by tapping the button on the screen. Select the oblique image for which the direction is to be changed from **Selected Slice**.

Clear Line

Tap the corresponding button on the touch screen to delete an oblique image.

Selected Slice

NOTE: This cannot be used when **Display Format** is 2*1.

Select a line by tapping the button on the touch screen or using the dial-button. The oblique image of the selected line is indicated by a blue contour.

Plumb Size

NOTE: This is used only when **Oblique Cut Type** is Multi Plumb.

Adjust the length of the vertical line by tapping the button on the touch screen or using the dial-button. You can adjust the length in 1 mm units from the center line, and the current length is displayed in the image information.

Slice Thick.

NOTE: This is used only when **Oblique Cut Type** is Multi Parallel.

Adjust the interval of the vertical lines by tapping the button on the touch screen or using the dial-button. You can adjust in 1mm units from the center line, and the current length is displayed in the image information.

Rotate Line

NOTE: This cannot be used when:

- **Oblique Cut Type** is Contour; or
- **Oblique Cut Type** is Line and **Selected Slice** is Select All.

Rotate a straight line by tapping the button on the touch screen or using the dial-button. When the line is rotated, the oblique image is also changed accordingly.

OVIX

NOTE: This cannot be used when **Oblique Cut Type** is Contour.

OVIX is the acronym for Oblique View extended, which sets the cross-sectional thickness of an oblique image and shows the image in 3D.

Tap the button on the touch screen to turn this function on or off. When this is on, an OVIX Line appears in the reference image, which indicates the cross-sectional thickness of the oblique image of the reference image. OVIX Post Curve is also displayed at the left of the monitor screen.

The thickness of the OVIX Line can be adjusted by using the **OVIX Thick** setting. To change the 3D image settings, select and adjust Render Setup or OVIX Post Curve from the 3D Utility Menu.

OVIX Thick.

Adjust the thickness of the OVIX line by tapping the button on the touch screen or using the dial-button. The 3D image for the set thickness appears.

Init

When you tap the **Init** button on the touch screen, the oblique image is deleted and the position information for the Ref. Image is initialized.

NOTE: The following 3D utility menu items are enabled in Oblique View mode: Render Setup, Chroma, Orientation Dot, 4D Cine, Volume CT, Post Processing, Preset

For more information on 3D Utility, see the 3D Utility Menu.

[Figure 4.45 Oblique View – Touch Screen]

XI VOCAL

NOTE: XI VOCAL is one of the 3D XI features. It is available as an optional feature of this product.

XI VOCAL enables you to measure the volume of tissues in 3D XI Mode.

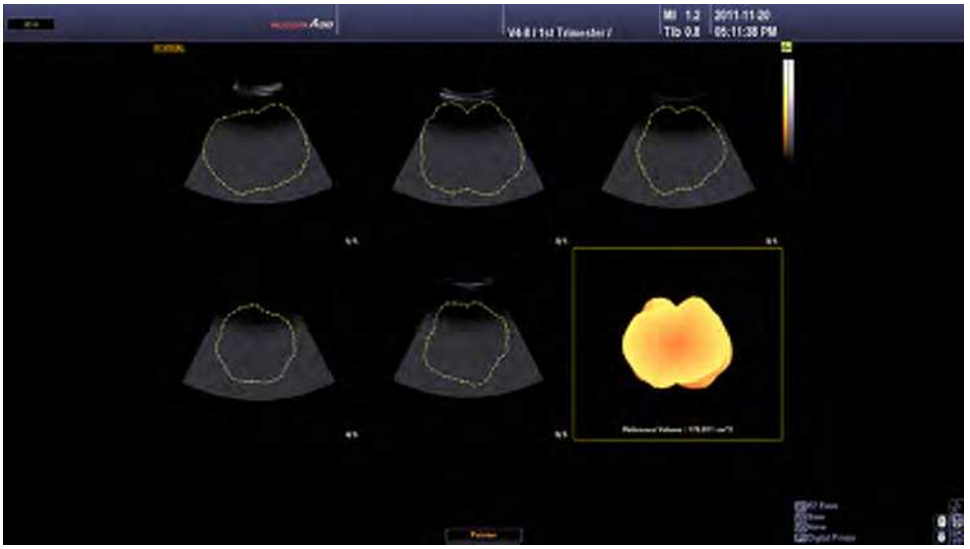

[Figure 4.46 XI VOCAL]

Tips!

VOCAL vs XI VOCAL

- VOCAL: Measures the volume of an object in a standard 3D image. Rotational slices are used.
- XI VOCAL: Measures the volume of an object in the selected reference image in MSV Mode by using parallel slices. Horizontal slices are used. The object is cut into numerous sectional slices to determine its volume.

XI VOCAL can be performed in the following order: XI VOCAL Define → XI VOCAL Edit → XI VOCAL.

XI VOCAL Define

Specify how slice and contour lines are retrieved.

Reference images and slice lines are displayed on the left side of the screen. On the right side of the screen, slice images with the start (S) and end (E) points of a slice line are displayed. The current mode, reference image, contour type, and # of slices are shown in the 3D image information area. The *3D XI-XI VOCAL* screen is displayed on the touch screen.

[Figure 4.47 XI VOCAL Define]

Contour Type

Select the contour line type. A contour line is automatically created for all types except **Manual**.

Solid

Used for object data with many echoes.

Cystic

Used for object data with fewer echoes.

General

Draw a contour line based on a typical object. It is faster than other automatic contour types, but less accurate.

Manual

Create the desired shape of an object manually. A contour line can be specified in the *XI VOCAL Edit* screen.

Ref. Image

Select a reference image from A, B, or C by tapping the corresponding button on the touch screen. The selected image will be highlighted with orange borders.

Ref. Contour

Tap the corresponding button on the touch screen to turn this function on or off. If it is turned on, a contour line can be drawn by using the trackball and the **Set** button.

Slice Direction

Set the direction of a slice line. Select from Vertical or Horizontal by tapping the corresponding button on the touch screen. Changing the direction of a slice line also changes the slice image displayed on the screen.

Init

Tap the touch screen to initialize the position of a 3D image.

Start

Tap the touch screen to switch to the *XI VOCAL Edit* screen.

of Slice

Specify the number of slice images. Select a value from 5, 10, 15, or 20 by tapping the corresponding button on the touch screen or using the dial-button. Depending on the selected number of images, the interval between slices will vary.

[Figure 4.48 XI VOCAL Define – Touch Screen]

XI VOCAL Edit

Specify the contour extraction range or run XI VOCAL.

Based on slice lines, slice images and pole points will be displayed on the screen. A pole point is a reference point against which an object contour is extracted. Two pole points appear in each slice image.

The selected slice image is highlighted with orange borders. 'The image number / the total number of slice images' is shown at the bottom of each image. The current mode is shown in the 3D image information area.

Tips!

Reference Image and Slice Line

The Reference Image and Slice Line always appear in the lower right corner of the *XI VOCAL Edit* screen. They can be useful when you need to consider the position of a slice image.

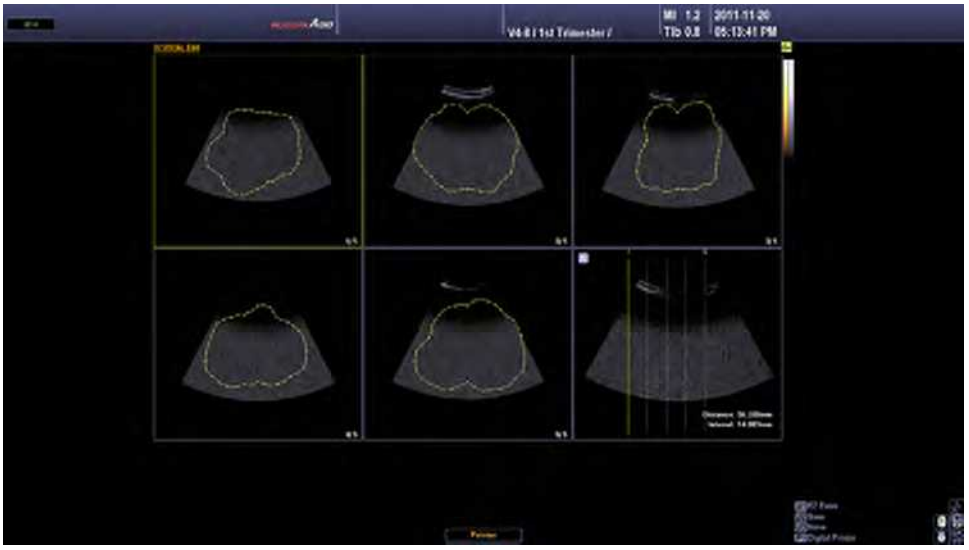

[Figure 4.49 XI VOCAL Edit]

Ref. Page

Change the page by tapping the corresponding button or using the dial-button on the touch screen.

New Contour

Tap the corresponding button on the touch screen to delete the current data and return to the *XI VOCAL Define* stage.

Accept Contour

Tap the corresponding button on the touch screen to apply changes and run XI VOCAL. The system will switch to the *XI VOCAL* screen.

Tips!

When Contour Type is set to Manual

Use the **Set** button and the trackball to draw a contour line before tapping **Accept Contour**. tapping **Accept Contour** without drawing an outline creates a general type outline.

[Figure 4.50 XI VOCAL Edit – Touch Screen]

XI VOCAL

Optimize XI VOCAL data for review.

Slice images with their contour lines shown and 3D reference images are displayed. The 3D reference image is highlighted with orange borders, and the calculated volume is shown at the bottom of the image. The current mode is shown in the 3D image information area.

Tips!

3D Reference Image

Use XI VOCAL to display an object for which volume has been obtained in 3D. Press the **Zoom**, **M/x**, **PD/y** or **PW/z** dial-buttons on the control panel to zoom or rotate the image for observation.

All Slice View

Tap the corresponding button on the touch screen to turn this view on or off. If it is turned on, all XI VOCAL data - including reference image, slice line and slice image - will be displayed simultaneously on the screen.

Edit Contour

Tap anywhere on the touch screen to return to the *XI VOCAL Edit* screen. You can use the trackball and the **Set** button to modify the contour.

[Figure 4.51 XI VOCAL – Touch Screen]

4D

NOTE:

- 4D Mode is an optional feature of this product.
- 4D Mode is only available when 3D probes are used.

In 4D Mode, 3D images can be obtained in real time with 3D probes. This mode is also called Live 3D Mode.

Images can be acquired in the same way as for standard 3D images.

4D Mode Screen

Under the current mode in the image information area, 'Live' appears to indicate 4D mode is active.

Press the **Freeze** button on the control panel to switch to the *4D Cine* screen.

NOTE: In 4D state, only MPR, MSV, and Oblique View modes are available. For more information, see 3D View-MPR and 3D XI.

XI STIC

NOTE:

- ▶ XI STIC is an optional feature of this product.
- ▶ XI STIC is only available when 3D probes are used.
- ▶ XI STIC only appears when Application is set to **OB**.

This option can be used to obtain the fetal cardiac cycle with volume data on fetal cardiac area, and to recompile the volume data for display. STIC is an abbreviation for Spatio-Temporal Image Correlation.

[Figure 4.52 XI STIC]

Acquiring XI STIC Image

NOTE:

- When a heart rate cannot be calculated because motion artifacting is severe or a cardiac cycle is not present, the system returns to the initial *XI STIC* screen.
- In Color STIC, the cardiac cycle can only be measured when the frame rate is 20 or above.

1. Select the **XI STIC** tab in the *3D Stand By* screen on the touch screen.
2. Set the various parameters as you would for acquisition of standard 3D images.
3. Press the **Freeze** or **Set** button on the control panel. The system will start acquiring 3D images.
4. When image acquisition is complete, XI STIC is displayed on the monitor screen, and the *XI STIC Confirm* screen appears on the touch screen. Check that the fetal cardiac cycle has been calculated.
5. Tap **Yes** on the touch screen to continue. Tap **No** to cancel and acquire images again.
6. Optimize the acquired images as needed for diagnosis.

Tips!

How to Improve STIC Volume Data

Scan Angle: Specify a small scan angle for small fetal hearts.

Scan Position: Adjust the scan position so that the center of the scan angle and the fetal heart are aligned properly.

ROI Box: Adjust the size of the volume box so that it nearly fits the size of the fetal heart.

Scan Angle

Set the scan angle. Select an angle between 15° and 60° by tapping the corresponding button on the touch screen or using the dial-button.

Scan Time

Set the image acquisition time. Select a value between 7s and 15s by tapping the corresponding button on the touch screen or using the dial-button.

Trimester

Set the pregnancy trimester. Select from 1st, 2nd and 3rd by clicking the corresponding button or using the dial-button on the touch screen.

Tips!

Trimester

When the 1st, 2nd, or 3rd trimester is set, the recommended scan time and STIC angle are automatically set as shown in the following table:

Trimester	1st	2nd	3rd
Scan Time	10 seconds	12 seconds	15 seconds
STIC Angle	20˚	25˚	30˚

If a scan time and STIC angle other than those in the above table are set, the trimester is then displayed as user set.

NOTE: For information on how to use, please refer to '3D Stand By'.

Reviewing XI STIC Image

XI STIC images are played as Volume Cine. XI STIC information, including Img. Angle, Vol. Angle, Scan Time, HR, and Volume Pos., is shown on the left side of the screen.

NOTE: The only available modes with Volume Cine are MPR, MSV and Oblique View.

Press the **Freeze** button on the control panel to stop Volume Cine playback.

Speed (%)

Set the playback speed for XI STIC images. Select a speed between 25% and 400% by tapping the corresponding button on the touch screen or using the dial-button. This rate is based on the fetal heart rate (100%).

Volume Pos.

Select an index by tapping the corresponding button on the touch screen or using the dial-button. The selected index will be highlighted with orange borders.

NOTE:

- Only available in Freeze state.
- For information on other usage, please refer to '3D View-MPR' and '3D XI'.

[Figure 4.53 XI STIC – Touch Screen]

3D Utility Menu

This menu is always displayed on the touch screen in view mode. Only the buttons that are available in the current mode are enabled.

If the 3D Utility Menu has more than 2 pages, you can move to a different page by tapping the → and ← buttons on the touch screen.

NOTE: The information in this section focuses on features common to all modes. For information on features unique to specific modes, such as OVIX and Auto Increment, refer to their corresponding sections.

3D Cine

The 3D images that have been temporarily saved in the system can be reviewed. The *3D Cine Define* screen is displayed on the touch screen.

3D Cine Define

Specify the settings needed for the creation of a Cine image.

Rotation Angle

Set the overall rotation angle by tapping the corresponding button on the touch screen. Select a value from 30°, 45°, 60°, 90°, 180°, or 360°.

Step Angle

Set the rotation angle for a single step in an image by tapping the corresponding button on the touch screen. Select a value from 1°, 3°, 5°, or 15°.

Tips!

The Difference between Rotation Angle and Step Angle

A Cine image rotates to the angle specified under Rotation Angle. During this process, each rotational step is equivalent to the angle specified under Step Angle. For example, if Rotation Angle is set to 360° and Step Angle is set to 15°, a 3D Cine image rotates to 360°in 25 steps, each of which requires a rotation of 15°.

Rotate Axis

Set the rotational axis by tapping the corresponding button on the touch screen.

Generate Cine

Cine images are generated by applying the current settings. Once the images are generated, the touch screen switches to *3D Cine Review*.

Review Cine

Review previously generated Cine images. The touch screen switches to 3D Cine Review.

Start Angle

Set the start angle of a Cine image by tapping the button on the touch screen or using the dial-button. When **Start Angle** is set, **Rotation Angle** is cancelled.

End Angle

Set the end angle of a Cine image by tapping the button on the touch screen or using the dial-button. When **End Angle** is set, **Rotation Angle** is cancelled.

Play Mode

Specify how a Cine image is played. Select from Loop or Yoyo by tapping the corresponding button on the touch screen or using the dial-button.

- ▶ Loop: Repeats playback in one direction.
- ▶ Yoyo: Plays until the end in one direction, and then plays in the reverse direction.

[Figure 4.54 3D Cine Define – Touch Screen]

3D Cine Review

Specify the settings needed to review a Cine image. The Cine Bar is shown on the monitor. The Cine Bar indicates Current Cine Frame Number/Total Number of Cine Frames.

[Figure 4.55 3D Cine Review]

Play Mode

Used to configure Cine image playback mode. Select Loop or Yoyo by tapping the button on the touch screen.

- Loop: Repeats playback in one direction.
- Yoyo: Plays until the end in one direction, and then plays in the reverse direction.

Cine Play

Tap the corresponding button on the touch screen to turn this feature on or off. Cine images are played when this is on. If it is turned off, **Cine Frame** will appear on the touch screen.

New Cine

Clears the current Cine image and creates a new one. The system switches to the *3D Cine Define* screen.

Cine Speed

Set the playback speed for a Cine image by tapping the corresponding button on the touch screen or using the dial-button. Select a value from 25, 50,100, 200, 300 or 400%.

Cine Frame

NOTE: This option is available when **Play** is turned off. Displays Current Cine Frame Number/Total Number of Frames.

Select a Cine frame to review. To do this, tap the corresponding button on the touch screen or use the dial-button. You can also move the trackball to the left or right.

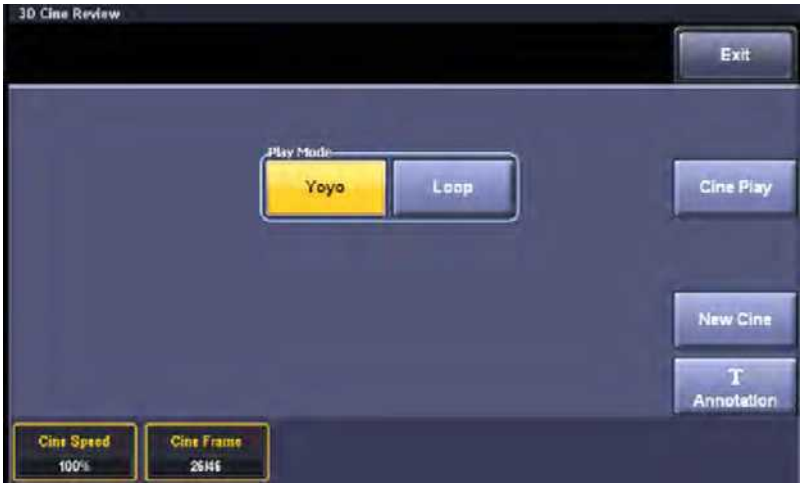

[Figure 4.56 3D Cine Review – Touch Screen]

MagiCut

NOTE:

- Available in MPR mode only.
- If MagiCut is enabled, **Accept ROI** is turned on automatically.
- After MagiCut is enabled, if the system is switched to a mode other than MPR Mode, MagiCut is automatically disabled.

The *MagiCut* screen is displayed on the touch screen. You can use this mode to cut out the parts of 3D images that are not relevant to diagnosis. Set the area to cut by using the trackball and the **Set** button.

Mode

Set the way that parts are cut by tapping the corresponding button on the touch screen.

- Inside Contour: Cuts the inside of the selected area.
- Outside Contour: Cuts the outside of the selected area.
- Inside Box: Cuts the inside of the box.
- Outside Box: Cuts the outside of the box.
- Small Eraser: Cuts the selected contour line.
- Big Eraser: Cuts the selected contour line. Used for thicker contours than Small Eraser.

Full

Tap the button on the touch screen to turn this feature on or off. If it is turned on, the entire area will be cut. If it is turned off, **Depth** will appear on the touch screen.

Depth

Set the cut depth. Select a value between 1 and 100 by tapping the corresponding button on the touch screen or using the dial-button.

Undo

Cancel the previous task(s).

- Undo: Cancel the last task.
- Undo All: Cancel all tasks that have been carried out so far.

SmoothCut Mode

- Erase Small: Enables to use the trackball to rub out the portion you wish to erase.
- Erase Big: Erases larger area.
- Recovery Small: Restores the volume image for the desired portion
- Recovery Big: Restores an image with larger area.

Mix

Set the combination of Render Modes 1 and 2. Select a value between 0:100 (%) and 100:0 (%) by tapping the button on the touch screen or using the dial-button.

Th.Low

Set the minimum threshold value. Select a value between 0 and 254 by tapping the corresponding button on the touch screen or using the dial-button.

[Figure 4.57 MagiCut-Touch Screen]

VCE

NOTE: Available in MPR's **Render** mode only.

Tap the button on the touch screen to turn this feature on or off. If it is turned on, the contrast of a 3D image will be enhanced. VCE is an abbreviation for Volume Contrast Enhancement.

Volume Slice

Volume data can be viewed in multiple slices. The *Volume Slice* screen is displayed on the touch screen.

NOTE: Tapping **Volume Slice** in a mode other than Render will switch the system over to Render mode and initiate Volume Slice. Render mode settings therefore apply to Volume Slice images.

Tips!

MSV vs. Volume Slice

MSV allows you to divide a 3D image into multiple slices, which can then be viewed as 2D images. On the other hand, Volume Slice allows you to view slice images in 3D. It also allows you to adjust the settings of each slice image separately.

Volume Slice Screen

9 images are displayed on the screen. At the center, reference images are displayed in the order of 2D, 3D and OH. On the other rows, Volume Slice images created based on those reference images are displayed.

The ROI position and the Slice number are shown for 3D reference images and Volume Slice images. The ROI box and the slice line are shown for 2D reference images. The ROI position and Index number are displayed in the 3D Reference and Volume Slice images.

[Figure 4.58 Volume Slice]

Tips!

Slice Number

Because 3 images are divided before and after a reference image, respectively, the Slice number is shown as a number between -3 and 3.

Ref. Image

Select a reference image from A, B, or C by tapping the corresponding button on the touch screen. The selected image is displayed in 2D Image.

- A: Axial Section
- B: Sagittal Section
- C: Coronal Section

3D Rotation

Set the orientation of a Volume Slice image. Select -90°, 90° or 180° by tapping the button on the touch screen.

Slice Thick.

Select the slice line intervals. Select a value by tapping the button on the touch screen or using the dial-button. The Volume Slice images are updated accordingly.

Selected Slice

Select a slice line. Select a value between -3 and 3 by tapping a button on the touch screen or using the dial-button. The selected slice line also appears in the 2D Reference Image. In addition, the Volume Slice image for the selected slice line is indicated by an orange contour.

NOTE: For descriptions of other menu items, see the menu of 3D Mode.

Tips!

Performing Volume Slice Again

To perform Volume Slice again based on a particular Volume Slice image:

- While the trackball is in Pointer mode, use the trackball and the **Set** button to select a Volume Slice image.
- Double-click the selected Volume Slice image. Volume Slice will be performed again based on the selected image. The result will be reflected in the reference images.

[Figure 4.59 Volume Slice – Touch Screen]

Post Processing

The *Post Processing* screen is displayed on the touch screen.

[Figure 4.60 Post Processing – Touch Screen]

Gradient Mask

Adjust the brightness of a specific area in an image. Make a selection by tapping the corresponding button on the touch screen.

Flip Image

Flip the orientation of an image.

NOTE: This option is only available in MSV Mode. However, the option will not be available if **OH** is enabled.

Tap the image on the touch screen and flip the image left and right or up and down.

Clear SFVI

Tap this button on the touch screen to turn this feature on or off. The Post Processing screen will appear. It reduces noise if it is turned on.

SFVI stands for Smart Filter Volume Imaging.

Detailed SFVI

Tap this button on the touch screen to turn this feature on or off. The Post Processing screen will appear. Select a value from 0 – 100 by using the **Strength** dial-button on the touch screen if it is turned on.

VC

Press the **VC** button to turn on or off. If set to On, use the dial-button to select a value between 1 and 5.

VC stands for Volume Compound.

Negative

Tap the corresponding button on the touch screen to turn this function on or off. If it is turned on, the brightness of an image will be inverted.

Auto Contrast

Tap the corresponding button on the touch screen to turn this function on or off. If it is turned on, the contrast of an image will be adjusted automatically.

Thres.

Tap the corresponding button on the touch screen to turn this function on or off. If it is turned on, the **Th. Low** or **Th. High** dial-button can be used to adjust the threshold.

Sharp

Tap the corresponding button on the touch screen to turn this function on or off. If it is turned on, the boundary of an image will become more apparent. Select a value between 100 and 400 by using the **Sharp** dial-button.

3D CI

Tap the corresponding button on the touch screen to turn this feature on or off. 3D CI is an abbreviation for 3D Compound Imaging.
When this is on, images are combined to remove noise and improve image quality.
Set the distance between images for 3D CI to between 1 and 10 by using the **3D CI Offset** dial-button.

Preset

The *Preset* screen appears on the touch screen. You will then be able to configure or edit 3D mode presets and usersets.

[Figure 4.61 Preset – Touch Screen]

Default

Uses the probe's default settings (general preset).

Load Preset

Tapping this touch screen button loads the selected preset and exits from the *Preset* screen.

Save Preset

Tapping this touch screen button saves the current preset settings and exits from the *Preset* screen.

Rename

Change the name of the selected Rendering Preset. When you tap the **Rename** button on the touch screen, the *Name* screen appears. After changing the name, tap **OK** to save the changed name. Tap Cancel to cancel the change.

Reset

The **Reset** button is only activated when a userset has been selected. Tapping this touch screen button restores the preset to the system's default settings, and exits from the *Preset* screen. Resetting, however, does not affect the position information.

4D Cine

The 4D images that have been temporarily saved in the system can be reviewed. The *4D Cine* screen is displayed on the touch screen.

NOTE: You can also press the **Freeze** button in 4D Mode to execute 4D Cine.

The Cine Bar is shown on the monitor. The Cine Bar indicates Current Cine Frame Number/Total Number of Cine Frames.

Display Format

Use the touch screen to select the Display Format.

- Single: Displays the 3D image in full screen view.
- Dual: Displays one 2D image and one 3D image.
- Quad: Displays all 2D and 3D images.

Play Mode

Specify how a Cine image is played. Select from Loop or Yoyo by clicking the corresponding button or using the dial-button on the touch screen.

- Loop: Repeats playback in one direction.
- Yoyo: Plays until the end in one direction, and then plays in the reverse direction.

Cine Type

Select the Cine image type by tapping the corresponding button on the touch screen.

- Volume: The **Volume** button appears when Cine images are played. The **MPR**, **MSV**, or **Oblique** buttons are enabled, depending on the state before the beginning of 4D Cine. Cine images can be played by changing Display Format, etc. The **Volume Pos**. button appears on the touch screen.
- Image: This is the general Cine playing method. The **Image Pos**. button appears on the touch screen.

■ Cine Play

Tap the corresponding button on the touch screen to turn this function on or off. Cine images are played when this is on.

■ Cine Speed

Set the speed at which Cine images are played. Select a value between 25% and 400% by tapping the **Cine Speed** button on the touch screen or using the dial-button.

■ Image Pos.

NOTE: This can be used when **Cine Type** is Image.

Select a Cine image to examine. Indicates Current Cine Frame Number/Total Number of Frames.

■ Volume Pos.

NOTE:

- ▶ This can be used when **Cine Type** is Volume.
- ▶ This cannot be used while Cine images are being played.

Select the volume data to examine. Current Volume Data Number/Total Number of Volume Data is shown.

[Figure 4.62 4D Cine – Touch Screen]

Mirror View

3D images can be viewed in multiple directions. The *Mirror View* screen is displayed on the touch screen.

NOTE: Pressing **Mirror View** in a mode other than Render will switch the system over to **Render** mode and initiate Mirror View. **Render** mode settings therefore apply to Mirror View images.

Mirror View Screen

The front, top, left and right images of a 3D image are displayed on the screen. In addition, a reference image is shown in the upper right corner of the screen, indicating the direction of images.

❶ A reference image for Mirror View.

❷ The left view image of the reference object.

❸ The top view image of the reference object.

❹ The right view image of the reference object.

❺ A reference image indicating the direction of each image.

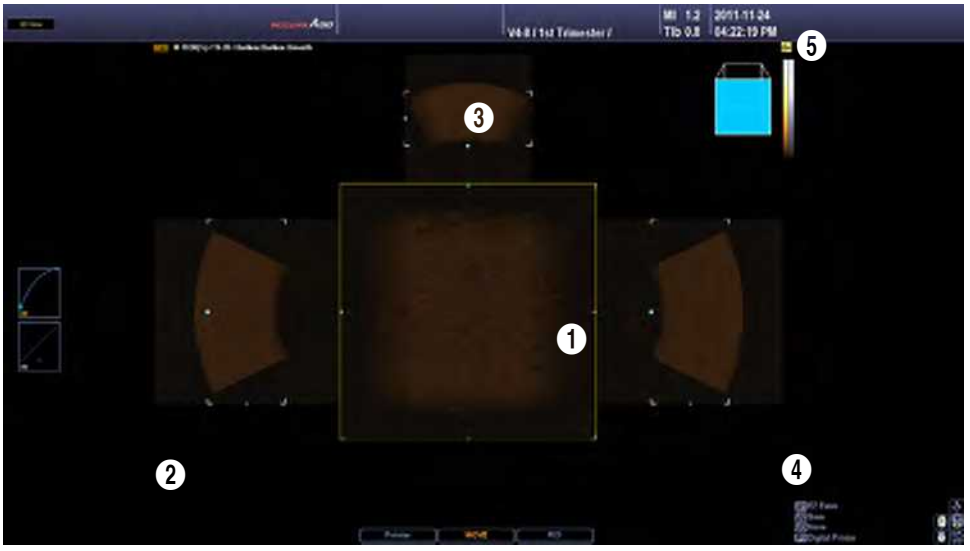

[Figure 4.63 Mirror View]

Trackball State

The current status of the trackball appears at the bottom of the screen. You can select Pointer, Move, or ROI for trackball. Press the **Change** button on the control panel to change the trackball state. The trackball state changes sequentially each time the button is pressed.

- Move: Move 3D images with the trackball. The acquired 3D image moves as you move the trackball.
- ROI: You can resize the ROI box with the trackball. The ROI box on the 3D image is resized as you move the trackball.
- Pointer: You can reposition the ROI box. Pressing the **Pointer** button on the control panel switches to Pointer state. You can resize an image or the ROI box in this state. Press the **Change** button again to switch to another state.

Center View

Select an image by tapping the corresponding button on the touch screen. The selected image will be displayed as the front image. Select from **Top**, **Left**, or **Right**.

Display Format

NOTE: Center View cannot be changed when Display Format is Single.

When you tap the **Display Format** button on the touch screen, the front image is displayed in full screen.

Position

Set the position of the post curve. Select an index between 1 - 100 by tapping the desired button or using the dial-button on the touch screen.

Bias

Set the bias of the post curve. Select a value between -100 and 100 by tapping a button on the touch screen or using the dial-button.

Tips!

Initializing Post Curve

When the trackball is in Pointer state, you can double-click Post Curve at the left side of the screen to initialize the Post Curve.

Transparency

Set the transparency of a 3D image. Select a value between 20 and 250 by tapping the corresponding button on the touch screen or using the dial-button.

The lowest value (20) is for complete transparency, and the highest value (250) is for complete opacity.

Mix

Set the combination of Render Modes 1 and 2. Select a value between 0:100 and 100:0(%) by tapping the button on the touch screen or using the dial-button.

Th.Low

Set the lowest threshold. Select an index between 0 - 254 by tapping a desired button or using the dial-button on the touch screen.

When you tap the **TH. Low** button on the touch screen, the front image is displayed in full screen.

Init

Initialize the position of images.

NOTE: To reset non-position information settings, tap **Preset**, and then **Default**.

Auto Run

NOTE: Auto Run is supported only for **Mirror View** and **Volume Slice**.

Tap the corresponding button on the touch screen to turn this function on or off. When this is on, the image rotates 360° around the Y-axis. You can also choose to turn the image around the X or Z axes.

Tips!

Performing Mirror View Again

To perform Mirror View again based on a particular Mirror View image:

- While the trackball is in Pointer mode, use the trackball and the **Set** button to select a Mirror View image.
- Double-click the selected Mirror View image. Mirror View will be performed again, based on the selected image. The selected image will be displayed as the front image.

[Figure 4.64 Mirror View – Touch Screen]

Render Setup

NOTE: In Oblique View Mode, this option is available only when **OVIX** is On.

The *Rendering Setup* screen is displayed on the touch screen. Specify the image rendering method.

After selecting the rendering mode tab on the touch screen, specify the required settings, including Render Direction and Render Mode. The specified settings will be displayed in the image information area.

This product provides 4 rendering modes: Gray, Color, See Thru., and Inversion.

NOTE: The **Color** and **See Thru**. tabs are available with color 3D images only.

[Figure 4.65 Render Setup – Touch Screen]

Gray

Specify how volume data acquired with the gray method should be rendered into 3D images.

■ Render Direction

Set the rendering direction by tapping the corresponding button on the touch screen. '+' indicates the facing direction and '-' indicates the opposite of the facing direction.

■ Render Mode 1, 2

Enter Render Modes 1 and 2 by tapping the corresponding button on the touch screen.

- ▶ Surface: Represents 3D images by using the Ray-Casting method, which shows the shell of an image with curved surfaces.
- ▶ Surface Smooth: Represents 3D images that are smoother than those produced by the normal **Surface** rendering.
- ▶ Max: Represents 3D images at maximum intensity. It can be useful for the observation of bone structures in a human body.
- ▶ Min: Represents 3D images at minimum intensity. It can be useful for observation of vessels or hollow parts of a human body.
- ▶ Light: Represents the depth of 3D images in terms of brightness.

- X-Ray: Represents 3D images in terms of average intensity. It shows images that are similar to X-ray images.
- VSI (Volume Shading Imaging) This displays a realistic image by using depth and intensity information.When Surface or Surface Smooth is enabled in Render Mode 1, Shading is enabled in Render Mode 2.

NOTE: For descriptions of other menu items, see Render Setup.

Mix

Set the combination of Render Modes 1 and 2. Select an index between 1 - 100 by tapping a desired button or using the dial-button on the touch screen.

Th.High

Set the highest threshold. Select a value between 1 and 255 by tapping the corresponding button on the touch screen or using the dial-button.

Th.Low

Specify the minimum threshold value. Select a value between 0 and 254 by tapping the corresponding button on the touch screen or using the dial-button.

Tips!

Threshold

This option allows you to adjust the threshold value in order to eliminate unnecessary data from images. As the value increases, cyst elements become more apparent. As the value decreases, bone elements become more apparent.

Th.Power

Used to set the threshold for the color section. Select an index between 1 - 255 by tapping the corresponding button on the touch screen or using the dial-button. As this value increases, more color is removed from an image.

Color

Specify how the volume data acquired with the Angio/CFM method should be rendered into 3D images. Other settings can be specified in the same way as with Gray Render Mode.

See Thru

Specify how the combined data of Gray+Angio or Gray+CFM should be rendered into 3D images. Except for Render Modes 1 and 2, the settings can be specified in the same way as with Gray Render Mode.

■ Transparent-Transparent

Adjust the transparency of both gray and color data to view color data as gray data. The parts hidden by gray data may appear slightly darker.

■ Transparent-Surface

Adjust the transparency of gray data to view color data as gray data. The parts hidden by gray data may appear slightly darker.

■ Max-Transparent

Set gray data to Max and color data to Transp in order to view color data. The parts hidden by gray data may appear slightly brighter.

■ Max-Surface

Set gray data to Max and color data to Surface in order to view color data. The parts hidden by gray data may appear slightly brighter.

Inversion

This option shows inverted images when the volume data acquired by the gray method is rendered into 3D images. Other settings can be specified in the same way as with Gray Render Mode.

FRV

This semitransparent rendering technique is useful for detecting morphological abnormalities or malformations of fetuses. Pressing the **FRV** button turns on Clear SFVI, HDVI, and VC.

FRV stands for Feto Realistic View.

Clear SFVI

Tap this button on the touch screen to turn this feature on or off. Turning it on reduces noise

SFVI stands for Smart Filter Volume Imaging.

VC

Press the **VC** button to turn on or off. If set to On, use the dial-button to select a value from 1-5.

VC stands for Volume Compound.

Light Direction

Use the touch screen or the trackball to reposition the direction of the light that is applied to volume.

NOTE: You need to press the **Move Light** button to enter trackball mode.

Set Color

Use the dial-button to select the Color Set applied to FRV. You can choose from values 1-5.

NOTE: You can use the **Hue**, **Saturation**, **Lightness** dial-buttons to set colors.

[Figure 4.66 FRV]

Chroma

The *Chroma Map* screen is displayed on the touch screen. Set the color of 2D and 3D images by tapping the corresponding button on the touch screen.

[Figure 4.67 Chroma Map – Touch Screen]

Auto Contour

NOTE:

- Available in MPR mode only.
- This function is supported only in **Render + Quad** mode, where the Render Direction of **Render Setup** is 'C+.'
- You cannot use this function together with **Accept ROI**.
- This option appears only when Application is set to OB.

Tap the button on the touch screen to turn this function on or off. Auto Contour automatically locates the facial area in a fetal image scanned in Sagittally. If turned on, a blue contour line (dotted) is shown in A Plane's ROI box. In addition, the **Contour Edit** button is shown on the touch screen.

Volume NT

NOTE:

- Volume NT is an optional feature of this product.
- Available in MPR mode only.

Use the VolumeNT feature to locate the mid-Sagittal view and measure the nuchal translucency (NT) of the fetus. The *VolumeNT* window appears on the touch screen.

Use the trackball to position the NT Seed in the NT area and press the **Set** button to display the NT measurement in plane A.

[Figure 4.68 VolumeNT-Touch Screen]

Tips!

How to get good results

- Obtain the fetus's Sagittal view as precisely as possible.
- A higher contrast between the fetus's palate and nasal bone will yield better results.
- Preferably, the lateral orientation of the probe should be parallel to the orientation of the fetus's body.
- For optimal results, make sure that the angle between the probe and the fetus's nasal bone is as close to 30° as possible.

NT Caliper Placement

Tap the corresponding button on the touch screen to select an NT measurement type.

- On to On: Measures NT by positioning the cursor on the NT's inner-inner.

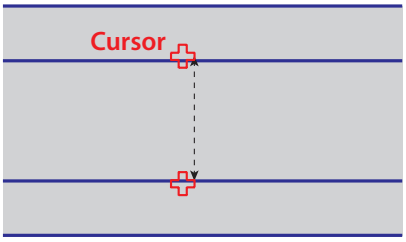

- On to Max Brightness: Positions one side of the cursor on the outside of the NT to measure inner-outer. This measurement method is used when harmonic methods have already been used, and one side of the nuchal translucency was blurred.

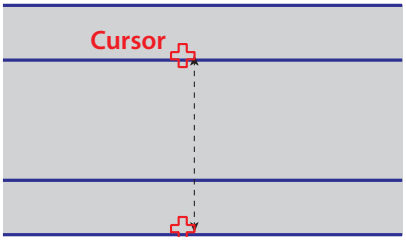

- In to In: This measurement method is similar to On to On, as it takes a measurement by inner-inner; however, it uses a narrower cursor interval.

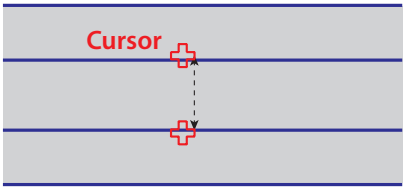

Items

- NT: Images in planes A, B, and C, as well as the automatically measured NT, are displayed in the 3D view screen.
- IT: Locates mid-sagittal view and tests fetus for spina bifida.

Assign

Tap the touch screen to include the selected items in the OB report.

Init

Resets the image's position information.

Hide All

Pressing the button will hide the marker and the measurements for NT and IT from the screen.

Auto

Tap the button on the touch screen to turn this function on or off. If it is on, the mid-Sagittal view will be located automatically. To calculate the NT value, position the cursor in the NT area and press the **Set** button on the control panel.

Edit

Edit the marker for each item shown as a result.

If the trackball is in cursor state, the marker's color will change from green to orange as you move the cursor near the + marker.

You can freely edit the marker by pressing the **Set** button and moving the trackball.

ROI Height

Use the dial-button to adjust the ROI Line's Height to define the scope of the application. The ROI Height may be adjusted while measurements are being taken or in Edit mode.

Marker Size

You can select Small, Medium, or Large for the marker size by tapping the button on the screen or using the dial-button.

Contour Edit

NOTE: This option is only available when **Auto Contour** is turned on.

Tap the button on the touch screen to turn this function on or off. When it is on, use the trackball and the **Set** button to modify a contour line.

Orientation Dot

Tap the button on the touch screen to turn this function on or off. When this is on, a dot appears at the center of the reference image.

NOTE: This option is only available in MSV Mode.

3D CI

Tap the corresponding button on the touch screen to turn this function on or off. 3D CI is an abbreviation for 3D Compound Imaging. When this is on, images are combined to remove noise and improve image quality. Set the distance between images for 3D CI to between 1 and 10 by using the **3D CI Offset** dial-button.

NOTE:

- When **3D CI** in **Post Processing** under the **3D Utility Menu** is set to On, the **3D CI Offset** button is created, which can then be used to adjust the distance between images.
- This option is only available in MSV Mode.

Volume CT

A 3D image is divided into Axial, Sagittal and Coronal images and then recompiled for display. In this way, information on slice images can be obtained. The current mode and the display format are shown in the image information area.

NOTE:

- This option is only available in MSV Mode.
- Measurement functions such as **Calculator** and **Caliper** cannot be used.

Display Format

Specify how Volume CT images are presented. Select from Cube or Cross by tapping the corresponding button on the touch screen. The touch screen menu will vary based on this setting.

Cube Volume CT

Shows the external slice image of a cube.

View Direction

Set the view direction for the external slice of a cube. Select from Front, Back, Left, Right, Up, or Down by tapping the corresponding button on the touch screen.

Offset

Adjust the position of the external slice by tapping the corresponding button or using the dial-button on the touch screen.

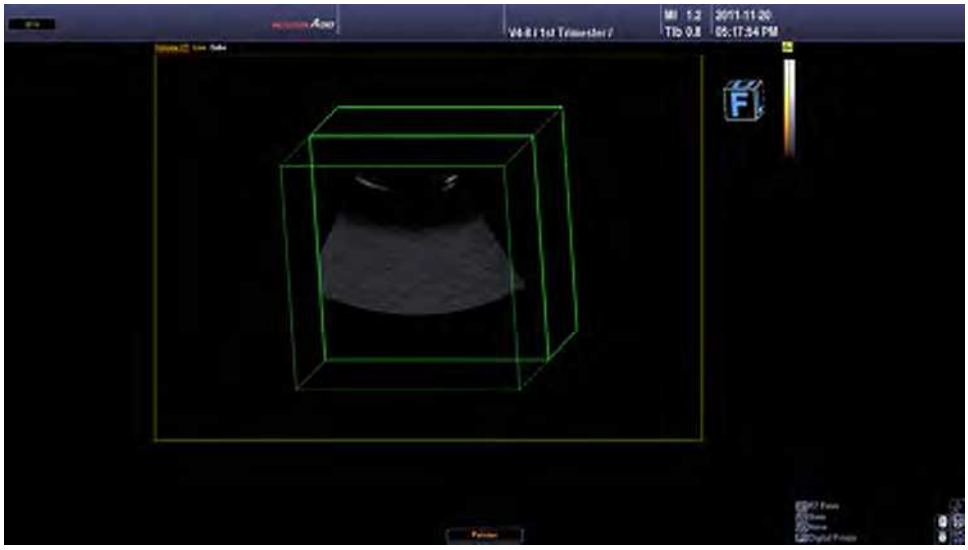

[Figure 4.69 Cube VolumeCT]

[Figure 4.70 Cube VolumeCT – Touch Screen]

Cross Volume CT

The internal cross-sectional images where the Coronal, Sagittal, and Axial Planes meet are shown.

- A Plane Offset: Front surface position adjustment. It is indicated by a blue contour on the screen.
- B Plane Offset: Up surface position adjustment. It is indicated by a red contour on the screen.
- C Plane Offset: Left surface position adjustment. It is indicated by a yellow contour in the screen.

Init

NOTE: To reset non-position information settings, tap **Preset**, and then **Default**.

Resets the image's position information.

Boundary

Tap the corresponding button on the touch screen to turn this function on or off. If it is turned on, the boundary lines of a cube will be shown. Boundary lines indicate the external boundary for the entire volume data.

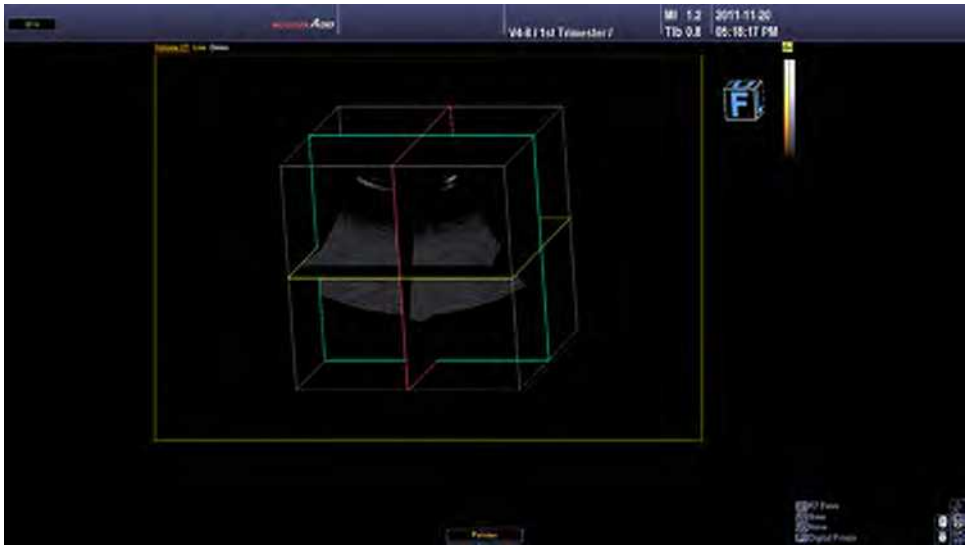

[Figure 4.71 Cross VolumeCT]

[Figure 4.72 Cross Volume CT – Touch Screen]

Chapter 5

Measurements and Calculations

▣ ***Measurement Accuracy 5-3***

Causes of Measurement Errors.....5-3

Optimization of Measurement Accuracy 5-5

Measurement Accuracy Table.....5-7

▣ ***Basic Measurements.....5-8***

Distance Measurements 5-11

Circumference and Area Measurement.....5-17

Volume Measurement 5-19

▣ ***Calculations by Application 5-22***

Things to note.....5-22

Common Measurement Methods 5-27

OB Calculations 5-32

Gynecology Calculations.....5-41

Cardiac Calculations.....5-44

Vascular Calculations 5-60

Fetal Heart Calculations.....5-71

Urology Calculations.....5-75

Abdomen Calculations 5-79

Small Parts Calculations 5-82

TCD Calculations 5-87

Pediatric Hip Calculations 5-89

Musculoskeletal Calculations.....5-91

Chapter 5

▣ ***Reports*** ***5-92***

Report View 5-92

Editing Reports 5-100

Data Management 5-107

Closing Reports 5-108

Measurement Accuracy

Measurement values can vary, depending on the nature of the ultrasound, the body's response to ultrasound, the measurement tools, algorithms, product settings, probe type and user operation.

Before using this product, make sure to read and understand the following information regarding the causes of measurement errors, and measurement optimization.

Causes of Measurement Errors

Image Resolution

The resolution of ultrasound images may be limited by the available space.

- Errors due to signal range may be minimized by adjusting the focus settings. Optimizing focus settings increases the resolution of the measurement area.
- In general, lateral resolution is lower than axial resolution. Therefore, measurements should be performed along the axis of the ultrasound beam to obtain accurate values.
- Gain has a direct impact on resolution. Gain can be adjusted by using the **Gain** button for each mode.
- In general, increasing the frequency of the ultrasound enhances resolution.

Pixel Size

- Ultrasound images in the product consist of pixels.
- Since a single pixel represents the basic unit of an image, a measurement error may result in the displacement of approximately ±1 pixel when compared to the original image size.
- However, this error becomes significant only when a narrow area in an image is measured.

Ultrasound Velocity

- The velocity of the ultrasound used during measurement is usually 1,540 m/s on average.
- The velocity of the ultrasound may vary depending on the cell type.
- The possible range of error is between approximately 2-5%, depending on the structure of the cells (about 2% for typical cells and about 5% for fatty cells).

Doppler Signal Adjustment

- During velocity measurement, an error may occur depending on the cosine angle between the blood flow and the ultrasound beam.
- For Doppler velocity measurements, the most accurate results can be ensured when the ultrasound beam is aligned in parallel with the blood flow.
- If that is not possible, the angle between them should be adjusted by using the **Angle** options.

Aliasing

- PW Spectral Doppler Mode uses a signal sampling technique to calculate the frequency (or velocity) spectrum.
- Adjust the baseline or the velocity scale to minimize aliasing. A lower frequency probe can also be used to reduce aliasing.
- Aliasing is dramatically reduced in CW Spectral Doppler Mode.

Calculation Equation

- Some of the calculation equations used for clinical purposes originate from hypotheses and approximation.
- All calculation equations are based on medical reports and articles.

Human Error

- Human error may occur due to inappropriate use or lack of experience.
- This can be minimized through compliance with and thorough understanding of the manuals.

Optimization of Measurement Accuracy

2D Mode

- Resolution is in proportion to the frequency of the probe.
- Penetration is in inverse proportion to the frequency of the probe.
- The highest resolution can be obtained at the focus of the probe, where the ultrasound beam is narrowest.
- The most accurate measurements can be obtained at the focus depth. The accuracy decreases as the distance from the focus increases, widening the beam width.
- Using the zoom function, or minimizing the depth display, makes distance or area measurements more accurate.

M Mode

- The accuracy of time measurements can be increased when the sweep velocity and the display format are set to high values.
- The accuracy of distance measurements can be increased when the display format is set to higher values.

Doppler Mode

- It is recommended to use lower frequency ultrasound for measurement of faster blood flows.
- The size of the sample volume is limited by the axial direction of the ultrasound.
- Using lower frequency ultrasound increases penetration.
- The accuracy of time measurements can be increased when the sweep velocity is increased.
- The accuracy of velocity measurements can be increased when the vertical scale is set to lower values.
- It is most important to use an optimal Doppler angle to enhance the accuracy of velocity measurements.

Color/Power Doppler Mode

- A protocol is not specified for images in Color Doppler Mode or Power Doppler Mode. Therefore, the same limitations imposed when measurements are taken in B/W images apply to the accuracy of the measurements taken in these modes.
- It is not recommended to use images in Color/Power Doppler Mode for measurement of accurate blood flow velocity.
- The amount of blood flow is calculated based on the average velocity, rather than the peak velocity.
- In all applications, the amount of blood flow is measured in PW/CW Spectral Doppler Mode.

Cursor Position

- All measurements are affected by input data.
- To ensure accurate positioning of the cursor:

  Adjust the images on the screen so that they are displayed at maximum granularity.

  Use the front edge or boundary point of a probe to make the start and end points of a measurement object more distinct.

  Make sure that the probe direction is always aligned during measurement.

Measurement Accuracy Table

The following tables show the accuracy of the measurements possible when using The Product. Ensure that the results of measurement accuracy checks are kept within the ranges specified in the table. Except for certain applications or probes, the following accuracy ranges should be maintained for measurement of a straight distance.

NOTE: An accuracy check must be performed once a year to ensure measurement accuracy. Contact Samsung Medison customer service department if the measurement accuracy is outside the range of the table shown below.

2D Mode

Measurements	Accuracy (Whichever is greater)	Test Methodology	Accuracy Based on	Range
Axial Distance	< ± 4% or 2mm	Phantom	Acquisition	Full Screen
Lateral Distance	< ± 4% or 2mm	Phantom	Acquisition	Full Screen

M Mode

Measurements	Accuracy (Whichever is greater)	Test Methodology	Accuracy Based on	Range
Depth	< ± 5% or 3 mm	Phantom	Acquisition	1 – 25 cm
Time	< ± 5%	Signal generator	Acquisition	0.01 – 11.3 sec

PW/CW Spectral Doppler Mode

Doppler Measurement	Accuracy (Whichever is greater)	Test Methodology	Accuracy based on	Range
Velocity	< ± 15%	Phantom	Acquisition	PW: 0.1cm/s – 8.8 m/s CW: 0.1cm/s – 19.3 m/s
Time	< ± 5%	Signal Generator	Acquisition	10 ms – 9.44 s

Basic Measurements

Press the **Caliper** button on the control panel.

NOTE: This performs a simple measurement, such as distance and area, regardless of applications. For information on measurements for each application, please refer to 'Measurements by Application' in this chapter.

The available measurement methods vary depending on the current diagnosis mode. Please see the following table:

Measurement	Diagnosis Modes	Measurement Methods
Distance Measurement	2D, M, D	Distance Line Trace Angle %StD
	M	M Distance
	D	D Velocity D A/B Manual Trace Limited Trace Auto Trace D Time
Circumference and Area Measurement	2D, M, D	Ellipse Area Trace %StA
Volume Measurement	2D, M, D	3 Distance Vol. MOD Vol. 1 Distance Vol. Ellipse Vol. Dist. + Ellipse Vol.

[Table 5.1 Basic Measurements by Diagnosis Mode]

Basic Measurement Operations

The following is the information on common button operations for basic measurements:

Changing/selecting measurement method

Select a measurement method on the touch screen. The menu items that can be selected on the touch screen vary according to diagnosis mode. The selected measurement method is displayed in the user information area.

Adjusting font size

Adjust the font size by tapping **Font Size** on the touch screen or rotating the dial-button.

Select a font size for the measurement results, from between 10 and 30, using the dial-button.

Canceling measurement results

- Undo: Tap **Undo** on the touch screen. Doing this discards the immediately preceding readings and allows you to take the measurement again.

NOTE: Undo can be used only for **3 Distance Vol**. and **Dis.+ Ellipse Vol**. among the volume measurement items.

- Delete: When you tap **Delete** on the touch screen or rotate the dial-button, part of the curve being traced is deleted.

NOTE: The back trace function can be used only for **Line Trace**, **Area Trace**, and **MOD Vol**. among the distance measurement items.

Setting the display position of the measurement results

Select **Move** or **Reset** by tapping **Result Action** on the touch screen or pressing the **[6]** dial-button.

- **Move**: Change the display position of the measurement results using the trackball and then press the **Set** button.
- **Reset**: When you press the dial-button, the display position of the measurement results is reset.

NOTE: When there are multiple pages of measurement results, you can find the desired result using **Move**.

Delete measurement results

Press the **Clear** button on the control panel.

Print measurement results

Press the **Print** button on the control panel.

Exiting basic measurements

Press the **Caliper** button again on the control panel. Or press the **Exit** button.

NOTE: To change settings such as measurement units, tap **Utility** on the touch screen and select **Measure Setup** > **General**. For more information, refer to 'Chapter 7. Utilities' in this manual.

[Figure 5.1 Caliper]

NOTE: The displayed measurement results vary depending on the settings in **Utility** > **Measure Setup** > **General** > **Caliper**.

Distance Measurements

Distance

A basic measurement that is available in all diagnosis modes. You can specify two points in a 2D image and measure the straight distance between them.

1. Tap **Distance** on the touch screen. 'Distance' is displayed in the user information area.
2. Use the trackball and the **Set** button on the control panel to specify both end points of the measurement area:

   ▶ Use the trackball to place the cursor at the desired position and press the **Set** button.

Tips!

Repositioning Point

Instead of pressing the **Set** button to confirm the point position, you can press the **Change** button to reset it.

3. Specify both end points and then the distance between them will be measured.
4. When the measurement is finished, the result is shown on the screen.

Line Trace

A basic measurement that is available in all diagnosis modes. You can specify a point in a 2D image and trace a curve from that point to measure the distance between them.

1. Tap **Line Trace** on the touch screen. 'Line Trace' is displayed in the user information area.
2. Use the trackball and the **Set** button on the control panel to specify the start point of the measurement area:

   ▶ Use the trackball to place the cursor at the desired position and press the **Set** button.

3. Use the trackball to draw the desired curve and then press the **Set** button to set the end point.

Tips!

Editing Curves

Moving the trackball in the opposite direction, before designating the end point by pressing the **Set** button, deletes the trace line. Also, rotating the touch screen's **Delete** button partially deletes the contour being traced.

4. Specify both end points and then the length of the curve will be automatically measured.

Angle

A basic measurement that is available in all diagnosis modes. Specify two straight lines in a 2D image and measure the angle between them.

1. Press **Angle** on the touch screen. 'Angle' is displayed in the user information area.
2. Draw two straight lines. For information on drawing a straight line, please refer to Distance.
3. The angle between the two lines will be calculated and displayed on the screen.

   ▶ When two angles are calculated, the smaller angle is displayed.

%StD

StD stands for Stenosis Distance, which is a basic measurement available in all diagnosis modes. In a 2D image, the diameter of a vessel is measured and the stenosis ratio calculated.

1. Tap **%StD** on the touch screen. '%StD' is displayed in the user information area.
2. Measure the total diameter of a vessel using the Distance measurement method.
3. When a new cursor appears, measure the inner wall diameter of the vessel under stenosis.
4. Calculate %StD with the following equation:

   %StD = (Outer Distance – Inner Distance) / Outer Distance x 100

M Distance

This is a basic measurement that is available in M Mode only. You can specify two points in an M image and measure the distance, elapsed time and velocity between them.

1. Tap **M Distance** on the touch screen. 'M Distance' is displayed in the user information area.
2. Specify two points and measure the straight distance between them. The method for measuring a line is the same as in 'Distance.'
3. When the measurement is finished, the result is shown on the screen.

D Velocity

This is a basic measurement that is available in Spectral Doppler Mode only. You can specify two points in a Spectral Doppler image, measure the distance between them, and the velocity at each point in order to calculate the velocity change, time change and acceleration.

NOTE: In a Spectral Doppler image, the X- and Y-axes represent time and velocity, respectively.

1. Tap **D Velocity** on the touch screen. 'D Velocity' is displayed in the user information area.
2. Specify two points and measure the straight distance between them. The method for measuring a line is the same as in 'Distance.'
3. When the measurement is finished, the result is shown on the screen. The displayed measurement results vary depending on the settings in **Utility** > **Measure Setup** > **General** > **Caliper**.

- V1: Velocity at Point 1
- V2: Velocity at Point 2
- PGmax: Maximum Pressure Gradient
- V2-V1: Change in Velocity
- Time: Change in Time
- RI: Resistivity Index
- S/D: Systolic to Diastolic Ratio
- Acc: Acceleration

The equations used for D Velocity measurement are as follows:

- $RI = \frac{V_1 - V_2}{V_1}$
- $dV = V_2 - V_1$
- $Acceleration = \frac{(V_2 - V_1)}{(T_2 - T_1)} = \frac{dV}{dT}$

D A/B

This is a basic measurement that is available in Spectral Doppler Mode only. You can specify two points in a Spectral Doppler image and measure the velocity at each point to calculate the ratio of the velocity between them.

1. Tap **D A/B** on the touch screen. 'D A/B' is displayed in the user information area.
2. Specify two points at which to measure velocity.
   - ▶ Use the trackball to place the cursor at the desired position and press the **Set** button.
3. When the measurement is finished, the result is shown on the screen. The displayed measurement results vary depending on the settings in **Utility** > **Measure Setup** > **General** > **Caliper**.
   - ▶ V1: Velocity at Point 1
   - ▶ V2: Velocity at Point 2
   - ▶ PGmax: Maximum Pressure Gradient
   - ▶ V1/V2: The Ratio of Velocity

Manual Trace

This is a basic measurement that is available in Spectral Doppler Mode only. You can specify a point in a Spectral Doppler image and trace a curve from that point to calculate the velocity, integral value and average velocity of blood flow.

1. Tap **Manual Trace** on the touch screen. 'Manual Trace' is displayed in the user information area.
2. Trace a curve. The method for measuring a curve is the same as in 'Line Trace.'
3. When the measurement is finished, the result is shown on the screen. The displayed measurement results vary depending on the settings in **Measure Setup** > **General** > **Caliper**.
   - ▶ PSV: Peak Systolic Velocity
   - ▶ EDV: End Diastolic Velocity
   - ▶ PI: Pulsatility Index
   - ▶ RI: Resistivity Index
   - ▶ S/D: Ratio of PSV to EDV
   - ▶ Vmax: Maximum Velocity
   - ▶ Vmean: Mean Velocity
   - ▶ PGmax: Maximum Pressure Gradient
   - ▶ PGmean: Mean Pressure Gradient
   - ▶ VTI: Velocity Time Integral
   - ▶ PHT: Pressure Half Time
   - ▶ Acc: Acceleration
   - ▶ AccT: Acceleration Time
   - ▶ Dec: Deceleration
   - ▶ DecT: Deceleration Time

The equations used for Manual Trace measurement are as follows:

- $V\ mean = \dfrac{VTI}{Duration\ of\ \ flow}$
- $RI = \dfrac{PSV - EDV}{PSV}$
- $PI = \dfrac{PSV - EDV}{Vmean}$
- $S/D = \dfrac{PSV}{EDV}$

Limited Trace

This is a basic measurement that is only available in Spectral Doppler mode. You can specify a point in a Spectral Doppler image and trace a curve from that point to calculate the velocity, integral value, and average velocity of blood flow.

1. Tap **Limited Trace** on the touch screen. **Limited Trace** will be displayed in the User Information area.
2. Trace the curve. Measurement is taken in the same way as 'Line Trace'.
3. When the measurement is finished, its result is shown on the screen. The displayed measurement results will vary depending on the settings you have selected in Utility > Measurement Setup > General > Caliper.
   - PSV: Peak Systolic Velocity
   - EDV: End Diastolic Velocity
   - PI: Pulsatility Index
   - RI: Resistivity Index
   - S/D: Ratio of PSV to EDV
   - Vmax: Maximum Velocity
   - Vmean: Mean Velocity
   - PGmax: Maximum Pressure Gradient
   - PGmean: Mean Pressure Gradient
   - VTI: Velocity Time Integral
   - PHT: Pressure Half Time
   - Acc: Acceleration
   - AccT: Acceleration Time
   - Dec: Deceleration
   - DecT: Deceleration Time

The equations used for Limited Trace measurements are as follows:

- $V\ mean = \dfrac{VTI}{Duration\ of\ \ flow}$

- $RI = \dfrac{PSV - EDV}{PSV}$

- $PI = \dfrac{PSV - EDV}{Vmean}$

- $S/D = \dfrac{PSV}{EDV}$

NOTE: The displayed measurement results for D Velocity, D A/B, Manual Trace, and Limited Trace vary according to application (General or Cardiac).

D Time

This is a basic measurement that is available in Spectral Doppler Mode only. You can specify two bars on a Spectral Doppler image and calculate the time between them.

1. Tap **D Time** on the touch screen. 'Time' is displayed in the user information area.
2. Set two bars on the spectrum with the trackball and the **Set** button.
3. When the measurement is finished, the result is shown on the screen.

Circumference and Area Measurement

Ellipse

A basic measurement that is available in all diagnosis modes. You can measure the circumference and area of a circular (elliptical) object in a 2D image.

1. Tap **Ellipse** on the touch screen. 'Ellipse' is displayed in the user information area.
2. Use the trackball and the **Set** button on the control panel to specify the diameter (axis) of the measurement area.
   - ▶ Use the trackball to place the cursor at the desired position and press the **Set** button.

Tips!

Repositioning Point

You can press the **Change** button to free the cursor for repositioning. Press the **Set** button to confirm the new point position.

3. Specify the size of the circle (ellipse).
   - ▶ Adjust the size using the trackball, and press the **Set** button.
4. When the measurement is finished, the result is shown on the screen.

The following equation is used for the measurement of ellipses:

$$Circ = 2\pi \cdot \sqrt{\frac{1}{2} \cdot \left\{ \left(\frac{A}{2} \right)^2 + \left(\frac{B}{2} \right)^2 \right\}}$$, (A: (A: Long axis, B: Short axis)

$Area = \pi \times a \times b$, (a, b: Axis)

Area Trace

A basic measurement that is available in all diagnosis modes. You can measure the circumference and area of an irregular object in a 2D image.

1. Tap **Area Trace** on the touch screen. 'Trace' is displayed in the user information area.
2. Use the trackball and the **Set** button on the control panel to specify the start point for tracing over the contours of the measurement area.

   ▶ Use the trackball to place the cursor at the desired position and press the **Set** button.

3. Trace the curve so that the measurement cursor returns to the start point, and then press the **Set** button.

NOTE: Trace lines must be closed. If you press the **Set** button before tracing is complete, tracing may be done over a straight line between the current point and the start point, resulting in a significant error.

4. When the measurement is finished, the result is shown on the screen.

The equations used for Trace measurement are as follows:

$$Circ = sum \sqrt{\{X(n)-X(n-1)\}^2+\{Y(n)-Y(n-1)\}^2}$$, (N = 1,2… last point)

$$Area = sum \left[\sqrt{X(n-1)\times Y(n)-X(n)\times Y(n-1)}\right]$$, (N = 1,2… last point)

%StA

StA stands for Stenosis Area, which is a basic measurement available in all diagnosis modes. In a 2D image, the area of a vessel is measured and the stenosis ratio (%) calculated.

1. Tap **%StA** on the touch screen. '%StA' is displayed in the user information area.
2. Measure the area of the vessel's outer wall using the Area measurement method.
3. When the second cursor appears, measure the area of the vessel's inner wall under stenosis.
4. Calculate %StA with the following equation:

   %StA = (Outer Area – Inner Area) / Outer Area x 100

Volume Measurement

NOTE: Since Dual Mode simultaneously displays two images on the screen, you don't have to return to the diagnosis mode to measure volume in Dual Mode.

3 Distance Vol.

A basic measurement that is available in all diagnosis modes. You can measure the volume of an object in a 2D image by using 3 straight lines.

1. Tap **3 Distance Vol.** on the touch screen. '3 Distance' is displayed in the user information area.
2. Specify two points and measure the straight distance between them. The method for measuring a line is the same as in 'Distance.'
3. Measure the length of the remaining two straight lines as above.
4. When the measurement is finished, the result is shown on the screen. The volume of the object, along with the length of each straight line, are calculated.

   ▶ Pressing the touch screen's **Undo** button while measurement is in progress discards the readings taken up to that point and starts taking readings again from the current step.

The equations used for 3 Distance measurement are as follows:

$$Vol = \frac{4}{3}\pi \cdot \frac{D_1}{2} \cdot \frac{D_2}{2} \cdot \frac{D_3}{2}$$, (D: distance)

MOD Vol.

A basic measurement that is available in all diagnosis modes. In a 2D image, the area of an irregular object and the length of its long axis are obtained to calculate its volume. MOD is an abbreviation for Method of Disk.

1. Tap **MOD Vol.** on the touch screen. 'MOD' is displayed in the user information area.
2. Draw a contour to measure. The way it is measured is the same as in 'Trace'.
3. Measure the length of the long axis. The way it is measured is the same as in 'Distance'.
4. When the measurement is finished, the result is shown on the screen.

Tips!

Editing Curves

Before specifying the end point by pressing the **Set** button, you can delete part of the curve being traced by rotating the **Delete** dial-button on the touch screen.

1 Distance Vol.

A basic measurement that is available in all diagnosis modes. You can measure the volume of an object in a 2D image by using only one straight line.

1. Tap **1 Distance Vol.** on the touch screen. '1 Distance' is displayed in the user information area.
2. Specify two points and measure the straight distance between them. The method for measuring a line is the same as in 'Distance.'
3. When the measurement is finished, the result is shown on the screen. The volume of the object along with the length of the straight line are calculated.

The equations used for 1 Distance measurement are as follows:

$$Vol = \frac{4}{3}\pi \cdot \left(\frac{D}{2}\right)^3$$, (D: distance)

Ellipse Vol.

A basic measurement that is available in all diagnosis modes. In a 2D image, the volume of a conical object is measured using an ellipse.

1. Tap **Ellipse Vol.** on the touch screen. 'Ellipse' is displayed in the user information area.
2. Specify the size of the circle (ellipse). The way it is measured is the same as in 'Ellipse'.
3. When the measurement is finished, the result is shown on the screen.

The following equation is used for Ellipse measurement:

$$Vol. = \frac{4}{3}\pi \cdot \frac{Long}{2} \cdot \frac{Short}{2} \cdot \frac{Short}{2}$$

Dist. + Ellipse Vol.

A basic measurement that is available in all diagnosis modes. You can measure the volume of an object in a 2D image by using one straight line and one circle (ellipse).

1. Tap **Dist. + Ellipse Vol.** on the touch screen. 'Distance + Ellipse' is displayed in the user information area.
2. Specify two points and measure the straight distance between them. The method for measuring a line is the same as in 'Distance.'
3. Specify the size of the circle (ellipse). The way it is measured is the same as in 'Ellipse'.
4. When the measurement is finished, the result is shown on the screen.
   - ▶ D: The length of a straight line
   - ▶ Long: The length of the long axis in an ellipse
   - ▶ Short: The length of the short axis in an ellipse
   - ▶ Area: The area of a circle
   - ▶ Vol.: Volume
   - ▶ Press the **Undo** button on the touch screen to cancel the current measurement and take it again.

The equations used for Distance + Ellipse measurement are as follows:

$Vol = \frac{\pi}{6} \times a \times b \times d$, (a : Short axis, b : Long axis , d : Distance)

Calculations by Application

Press the **Calculator** button on the control panel.

Things to note

Before starting measurement:

Register Patient

Make sure that the currently registered patient information is correct. If the patient is not registered, press the **Patient** button on the control panel.

Use the **Study Information** tab to enter or change a patient's information per diagnosis category.

For the Patient Information menu and entry method, refer to 'Patient Information' in 'Chapter 3. Starting Diagnosis'.

Check Probe, Application & Preset

- Check the probe name and application that are displayed in the title bar. Press the **Probe** button on the control panel to use another probe or application.
- Check the preset settings on the *Probe* screen.

Measurement Menu Settings

Set the related menus for convenient measurement. Refer to the 'Setting Measurements' section in 'Chapter 7. Utilities' for additional information.

Measurement Menu Touch Screen

Measurement menu options for each diagnosis item are shown on the touch screen. The measurement menu touch screen is made up of four sections as shown below:

1. Measurement Menu Tabs: Available menu tabs for the current measurement package are shown. The measurement menu options shown on the touch screen will vary depending on which tab is selected.
2. Measurement Menu Options: Available menu options for the current tab are shown. Items shown on the touch screen will vary depending on which menu option is selected.
3. Measurement Items: Available measurement items for the current menu option are shown. Tapping on the button starts the selected measurement.
4. Common Control Options: These options are always available regardless of which measurement option was selected.

[Figure 5.2 Measurement Menu Touch Screen]

Measurement Operations

The following gives information on the common button operations for measurements:

Change Measurement Method

Press the **Change** button on the control panel. If the current measurement item can be measured in more than one way, the measurement method can be changed according to your preferences. The current measurement method is displayed in the user information area. Once measurement has started, the method cannot be changed.

Measurement Unit Change

Exit from the current measurement and select the desired unit from **Utility** > **Measure Setup** > **General** > **General** > **Display** > **Measurement Unit** on the touch screen.

Delete Trace Line1

Delete a trace line by moving the trackball in the opposite direction. The trace line can only be erased when measuring Doppler spectrum using Manual Trace.

Delete Measurement Result

Press the **Clear** button on the control panel.

NOTE: The measurement results are deleted from the screen but are still shown on the report for the corresponding application.

Print Measurement Result

Press the **Print** button on the control panel.

Exit Measurement

Press the **Calculator** button again on the control panel. Or press the **Exit** button.

End Diagnosis

Press the **End Exam** button on the control panel. The diagnosis for the current patient ends and all measurement results are saved.

Package

Select a measurement package by tapping **Package** on the touch screen or rotating the dial-button.

Laterality

Select left (Lt) or right (Rt) for the position of the measurement item by tapping **Laterality** on the touch screen or rotating the dial-button. This appears on the touch screen only with specific packages.

Trace Direction

Set the trace direction of the Doppler spectrum by tapping **Trace Direction** on the touch screen or rotating the dial-button. This is enabled only after Auto or Limited Trace is carried out in Spectral Doppler Mode.

- ▶ Up: Only the + part of the Doppler waveform is traced.
- ▶ Down: Only the – part of the Doppler waveform is traced.
- ▶ All: All parts of the Doppler waveform are traced.

Threshold

Set the threshold by tapping **Threshold** on the touch screen or rotating the dial-button. This is enabled only after Auto or Limited Trace is carried out in Spectral Doppler Mode. Adjusting the threshold facilitates Doppler spectrum analysis.

Font Size

Tap the **Font Size** button on the touch screen or use the dial button to set the font size of the measurement result.

HR Cycle

Set the heart rate (HR) cycle by tapping **HR Cycle** on the touch screen or rotating the dial-button. This is enabled only when 'HR' is selected for the measurement item.

Result Action

Set the position of the measurement result by tapping **Result Action** on the touch screen or rotating the dial-button.

- Move: Change the display position of the measurement results. Change the position with the trackball and then press the **Set** button.
- Reset: Resets the location where measurement results are displayed.

Tips! When there are multiple pages of measurement results, you can find the desired result using **Move.**

Undo

Cancel the last measurement by tapping **Undo** on the touch screen.

Edit Data

Tapping **Edit Data** on the touch screen switches to the *Report* screen.

Common Measurement Methods

This section provides information on the common measurement methods used for applications.

Measurements in Spectral Doppler Mode

In general, if you trace a Doppler spectrum, you can obtain results for various measurement items automatically. There are 3 ways to trace a Doppler spectrum.

ACCUVIX A30 also allows you to select a specific item under the Measurement menu and take measurements individually, without tracing a Doppler spectrum.

Auto Trace

A spectrum is traced automatically. It is enabled in the Measurement menu in Spectral Doppler Mode.

1. Press **Auto Trace** in the Measurement menu.
2. The system traces a spectrum automatically.
3. When the trace is complete, the measurement results are displayed on the screen.

Tips!

Things to consider for Doppler Spectrum Auto Trace

The state of a Doppler spectrum may affect measurement results. Please see the following:

Causes for Trace Failure

- If the Gain is changed for a Doppler image in the Freeze state, Contour Trace and Peak Trace will not work.
- If there is little or no noise in an image without a spectrum, Contour Trace will not work.
- If there is severe noise in an image, Contour Trace will not work.
- If the Clutter filter is set too high, Auto Trace or Limited Trace may not work.

Causes for Inaccurate Peak Trace

- If PRF (Pulse Repetition Frequency) is lower than the velocity of the observation area, aliasing may occur. If the original signals are separated from aliasing, a trace can be done but the peak measurement may not be accurate.
- If the peak of a spectral waveform is not clear or occurs intermittently, a trace can be done but the peak measurement may not be accurate.
- If the Doppler Gain is set too high or low, it becomes difficult to distinguish spectrums. This may result in measurement error(s).
- If the Wall Filter is set too high, only part of the spectrum is displayed. In this case, a trace can be done but the peak measurement may not be accurate.
- If abnormal noise or artifact occurs, a trace can be done but the peak measurement may not be accurate.

Misc.

- Use of the CW Probe may result in measurement error(s).
- Limited Trace is supported only for two-peak spectrums such as Mitral Valve Inflow and Tricuspid Valve Inflow, in the cardiology application.

Limited Trace

If you specify a measurement range, a spectrum is traced automatically. It is enabled in the menu in Spectral Doppler Mode.

1. Press **Limited Trace** in the Measurement menu. A bar appears allowing you to specify a measurement area.
2. Specify the measurement range.
   - Place the bar at a desired position with the trackball, and press the **Set** button.
3. The system traces spectrums within the specified range automatically.
4. When the trace is complete, the measurement results are displayed on the screen.

Manual Trace

A spectrum can be traced manually. This is enabled in the menu in Spectral Doppler Mode.

1. Press **Manual Trace** in the Measurement menu. A measurement cursor appears over a spectrum.
2. Trace the spectrum. The measuring method is the same as in 'D Trace.'
3. When the trace is complete, the measurement results are displayed on the screen.

Itemized Measurement

In the Measurement menu, select an individual item and take a measurement.

1. Press the **Calculator** button on the control panel after obtaining a desired image.
2. Select a desired item in the Measurement menu. The '+' cursor appears over a spectral waveform.
3. Position the '+' cursor and press the **Set** button.
4. The measurement results for the selected item are displayed on the screen.

Item	Type	Method	Equation
PSV (Peak Systolic Velocity)	Velocity	cm/s or m/s	-
EDV (End Diastolic Velocity)	Velocity	cm/s or m/s	-
TAMV (Time Average Mean Velocity)	Velocity	cm/s or m/s	-
TAPV (Time Average Peak Velocity)	Velocity	cm/s or m/s	-
PGmean (Mean Pressure Gradient)	Calculation	mmHg	-
PGmax (Maximum Pressure Gradient)	Calculation	mmHg	$4 \times PSV^2$
S/D (Ratio of PSV to EDV)	Calculation	Ratio	(PSV / EDV)
D/S (Ratio of EDV to PSV)	Calculation	Ratio	EDV /PSV
RI (Resistivity Index)	Calculation	Ratio	(PSV – EDV) / PSV
PI (Pulsatility Index)	Calculation	Ratio	(PSV – EDV) / TAPV

NOTE: If the measurement item is OB or Vascular, you can select the measurement item in Doppler spectrum.

You can select this from **Measure Setup** > **OB** > **General** > **OB Doppler Results** or **Measure setup** > **Vascular** > **Doppler Results**.

Tips!

Taking measurements via Auto Calc

You can use **Auto Calc** to take measurements on predetermined item(s).

Refer to the Auto Calc section of Chapter 7. Utilities for more information on measurement item selection.

Volume Flow Measurement

Select **Volume Flow** in the **Measurement** menu.

Volume Flow allows you to measure and calculate an area or distance. For information on distance or area measurements, please refer to 'Basic Measurements.' The TAMV (Time Avg. Mean Velocity) value is automatically measured.

Vesl. Area (Vessel Area)

Measure the area of a blood vessel and calculate TAMV and Volume Flow.

$$VolumeFlow(A) = Area \times TAMV \times 60$$

Vesl. Dist. (Vessel Distance)

Measure the width of a blood vessel and calculate TAMV and Volume Flow.

$$VolumeFlow(D) = \frac{\pi \times d^2}{4} \times TAMV \times 60$$

Stenosis Measurement

You can measure the stenosis of each blood vessel system by measuring and calculating an area or distance.

%StA

Measure the area of the inner and outer walls of a blood vessel. (StA stands for Stenosis Area.)

1. Select the **%StA** menu and the first cursor will appear in 2D Mode.
2. Measure the area of the vessel's outer wall using the Circ/Area measurement method.
3. When the second cursor appears, measure the area of the vessel's inner wall under stenosis.

   %StA = (Outer Area – Inner Area) / Outer Area x 100

%StD

Measure the diameter of a blood vessel. (StD stands for Stenosis Distance).

1. Select the **%StD** menu and the first cursor will appear in 2D Mode.
2. Measure the total diameter of a vessel, using the Distance measurement method.
3. When a new cursor appears, measure the diameter of the vessel's inner wall under stenosis.

   %StD = (Outer Distance – Inner Distance) / Outer Distance x 100

Heart Rate Measurement

HR (Heart Rate)

You can calculate heart rates for a certain period of time.

1. Select **HR** in the Measurement menu. A bar appears allowing you to specify a measurement area.
2. Specify the measurement range.

   ▶ Place the bar at a desired position with the trackball, and press the **Set** button.

3. The system automatically measures the heart rate within the measurement range.

OB Calculations

NOTE:

- Ductus Venosus, Fetal HR can only be measured in Doppler Mode.
- For information on basic measurement methods, see 'Basic Measurements' and 'Common Measurement Methods'.
- For references on measurement items, see the 'Reference Manual Part 1'.

Before Taking OB Measurements

OB Basic Information

Enter the information required for OB diagnosis in the *Patient Information* window. The basic OB information includes LMP (Last Menstrual Period) and Gestations.

Once LMP is entered, EDD (Estimated Delivery Date) and GA (Gestational Age) are calculated automatically. LMP is required for the calculation of values such as EDD and SD in obstetrics measurements.

- EDD (LMP) = LMP + 280 days
- GA (LMP) = Current System Date – LMP

When you input ovulation date, the system calculates LMP, GA (LMP), and EDD (LMP) automatically.

- LMP = Ovul. Date -14

Regardless of LMP, enter the EDD, after consulting a physician, into Estab. Due Date. If LMP is not available, when Estab. Due Date is modified, LMP is automatically calculated and the 'C' mark is displayed next to the LMP information.

A maximum of four fetuses can be entered in the Gestations menu. The default value is '1'. In the case of twins, enter '2', etc.

For further information about patient information menus and how to input patient information, refer to 'Entering Patient Data' in 'Chapter 3. Settings'.

OB Measurement Menu Settings

Set up the GA Equation, GA Table and OB measurement menus that are used in obstetrics measurements. The user can manually write, back up or restore GA Tables. For more information on the GA Equation and Table, refer to the Reference Manual.

NOTE:

- It will be convenient to set the function of the **User 2** and **User 3** buttons on the control panel to the two obstetrics measurement items you want to use. Set their functions in **Utility** > **Setup** > **User Defined key** > **User Key Setup**.
- For twins, distinguish fetuses by specifying them as **Fetus A** and **Fetus B** in the Measurement menu. To change between the fetuses when measuring, press the **Change** button on the control panel or use the touch screen's **Select Fetus** dial-button.

Refer to the 'Setting Measurements' section in 'Chapter 7. Utilities', for additional information on other measurement-related menu items.

Early OB Measurement Menu

When the measurements for the selected items are complete, the measurements and gestational age are displayed on the screen. The measurement method for each item is the same as for basic measurements. Measured items are automatically recorded in a report.

[Figure 5.3 Early OB Measurement Menu]

Measurement Menu	Item	Mode	Method	Units
Fetal Biometry	GS	All	Distance Measurement	cm, mm
	YS	All	Distance Measurement	cm, mm
	CRL	All	Distance Measurement	cm, mm
	NT	All	Distance Measurement	mm
	NB	All	Distance Measurement	cm, mm
	BPD	All	Distance Measurement	cm, mm
	FL	All	Distance Measurement	cm, mm
	AC	All	Circumference or automatic calculation	cm, mm
	Fetal HR	M, PW	Heart Rate	bpm
	EFW	All		
Duct Venosus	Duct V All	PW	Velocity	cm/s, m/s
	Duct V S Vmax	PW	Velocity	cm/s, m/s
	Duct V D Vmax	PW	Velocity	cm/s, m/s
	Duct V A Vmax	PW	Velocity	cm/s, m/s
	Fetal HR	PW	Velocity	cm/s, m/s

Automatic calculation

Some items in the Measurement menu are automatically calculated based on the measurements of other items.

HC

This is automatically calculated using the following formula, provided there are measured BPD and OFD values.

$$HC = \pi \times \sqrt{(BPD^2 + OFD^2)/2}$$

Exception: when you use Merz reference, $HC = 2.325 \times \sqrt{BPD^2 + OFD^2}$

AC

This is automatically calculated using the following formula, provided there are measured APD and TAD values.

$$AC = \pi \times \sqrt{(APD^2 + TAD^2)/2}$$

Exception: when you use Merz reference, $AC = \pi \times (APD + TAD)/2$

FTA

This is automatically calculated using the following formula, provided there are measured APD and TAD values.

$$FTA = \pi \times (APD \times TAD)/4$$

MAD

This is automatically calculated using the following formula, provided there are measured APD and TAD values.

$$MAD = (APD + TAD)/2$$

ThC

This is automatically calculated using the following formula, provided there are measured APTD and TTD values.

$$ThC = \pi \times \sqrt{(APTD^2 + TTD^2)/2}$$

APTD x TTD

This is automatically calculated, provided there are measured APTD and TTD values.

NOTE: For reference, the Osaka University/Tokyo University methods are mainly used in Asia, the Merz method in Europe, and the Shepard/Hadlock methods in the American continent.

General OB Measurement Menu

When the measurements for the selected items are complete, the measurements and gestational age are displayed on the screen. The measurement method for each item is the same as for basic measurements. Measured items are automatically recorded in a report.

[Figure 5.4 General OB Measurement Menu]

Measurement Menu	Item	Mode	Method	Units
Fetal Biometry	BPD	All	Distance Measurement	cm, mm
	HC	All	Circumference or Automatic Calculation	cm, mm
	AC	All	Circumference or Automatic Calculation	cm, mm
	FL	All	Distance Measurement	cm, mm
	EFW	All		
	Lat Vent	All	Distance Measurement	cm, mm
	CEREB	All	Distance Measurement	cm, mm
	CM	All	Distance Measurement	cm, mm
	NF	All	Distance Measurement	cm, mm
	OFD	All	Distance Measurement	cm, mm
	Fetal HR	M, PW	Heart Rate	bpm
	Cervix L	All	Distance Measurement	cm, mm
	HUM	All	Distance Measurement	cm, mm
	APD	All	Distance Measurement	cm, mm
	TAD	All	Distance Measurement	cm, mm
AFI	All	All	Distance Measurement	cm, mm
	Q1	All	Distance Measurement	cm, mm
	Q2	All	Distance Measurement	cm, mm
	Q3	All	Distance Measurement	cm, mm
	Q4	All	Distance Measurement	cm, mm
	MVP	All	Circumference	cm, mm
Rt. Uterine A Lt. Uterine A Mid Cereb Artery Umbilical Artery	Auto Trace	PW	Doppler Spectrum Trace	
	Limited Trace	PW	Doppler Spectrum Trace	
	Manual Trace	PW	Doppler Spectrum Trace	
	PSV	PW	Velocity Measurement	cm/s, m/s
	EDV	PW	Velocity Measurement	cm/s, m/s
	%StA	All	Calculation after Area Measurement	%
	%StD	All	Calculation after Distance Measurement	%
	Vesl. Area	All	Area Measurement	cm^2, mm^2
	Vesl. Dist	All	Distance Measurement	cm, mm

AFI (Amniotic Fluid Index)

Measure the amniotic fluid index. Measurements are performed by dividing the pregnant woman's abdomen into four parts. The distance between the fetus and the farthest point of each area is measured. To obtain a specific image from each quadrant plane, press the **Freeze** button to go to the diagnosis mode. After obtaining the image, press the **Freeze** button again to return to the measurement mode.

Calculating Estimated Fetal Weight (EFW)

When measurements for the following items are complete, the system uses the results to automatically calculate the estimated fetal weight. For an equation for calculating fetal weight, please refer to 'Estimated Fetal Weight Formula' in the Reference Manual Part 1.

- BPD and AC
- BPD, FL and FTA
- BPD, APTD, TTD and FL
- BPD, APTD, TTD and SL
- BPD and TTD
- AC and FL
- BPD, AC and FL
- HC, AC and FL
- BPD,HC, AC and FL
- AC

Continuous Measurement / Review for EFW Calculation

You can measure OB item(s) continuously for EFW calculation.

Tips!

Before starting measurement:

1. It will be convenient to set the function of the **User 2** and **User 3** buttons on the control panel to the two obstetrics measurement items you want to use for continuous EFW measurement. Set their functions in **Utility** > **Setup** > **User Defined key** > **User Key Setup**. For more information, refer to the 'User Defined Key' section of 'Chapter 7. Utilities'.
2. Check EFW Reference. You can select or change it from **Utility** > **Measure Setup** > **OB** > **Tables**.

NOTE: This function is not available in 3D Mode.

Measurement Methods

1. Press **User 2** (or **User 3**) on the control panel. The OB menu and measurement items are displayed on the screen.
2. Measure the items for EFW calculation, using the trackball and the **Set** button.
3. Press the **Freeze** button to finish the first measurement.
4. Press the **Freeze** button to measure the next items.
5. Once all the measurements have been taken, EFW is displayed on the screen.

EFW measurements and their sequences are as follows:

Reference	Measure Item (by Order)
Campbell	AC
Hadlock	BPD→AC
Hadlock1	AC→FL
Hadlock2	BPD→AC→FL
Hadlock3	AC→FL→HC
Hadlock4	BPD, HC→AC→FL
Hansmann	BPD→TTD
Merz	BPD→AC
Osaka	BPD→FTA→FL
Shepard	BPD→AC
Shinozuka1	BPD→AC→FL
Shinozuka2	BPD→APTD, TTD→SL
Shinozuka3	BPD→APTD, TTD→FL
Ferrero	AC→FL
Higginbottom	AC
Thurnau	BPD→AC
Warsof	BPD→AC
Weiner1	AC→HC
Weiner2	AC→FL→ HC
Woo	BPD→AC→FL

Tips!

Changing Measurement Sequence

To change the measurement sequence, go to **Utility** > **MeasureSetup** > **OB** > **Tables** > **EFW Sequential Measurement**. You can use the **EFW** dial-button on the touch screen to change the EFW Reference.

Review the Results of EFW Calculation

1. Press **User 2** (or **User 3**) on the control panel. Measured items of EFW Calculation and the results are displayed on the screen.
2. To remove the results, press the **Clear** button on the control panel.

CAUTION:

- To calculate the GA and the EFW by measuring a specific part of a fetus, an accurate reference must be selected.
- If the EFW Reference of the ACCUVIX A30 is changed, the existing EFW is recalculated with the new reference and then shown on the report. Therefore, it is recommended that you do not change the EFW Reference of a patient.
- Since multiple GAs and EFW References are provided, the specialist must make a choice based on his or her clinical judgment. Choosing an inappropriate reference may result in incorrect measurements.
- When performing an exam, one must bear in mind that measurements may vary depending on the posture of the fetus.
- In cases where there are multiple fetuses, be sure to verify the Fetus ID to avoid confusion.
- The GA and EFW Reference possess national and regional characteristics, which must be taken into consideration when selecting a reference

Gynecology Calculations

NOTE:

- For information on basic measurement methods, see 'Basic Measurements' and 'Common Measurement Methods'.
- For references on measurement items, see the 'Reference Manual Part 2'.

Before Taking GYN Measurements

Enter the information required for GYN diagnosis in the *Patient Information* window. Basic Information for gynecology includes Gravida, Para, Aborta, Ovul.Date, Day of Cycle, and Ectopic.

Measurement Menu

The measurement method for each item is the same as for basic measurements. Measured items are automatically recorded in a report.

[Figure 5.5 GYN Measurement Menu]

Measurement Menu	Item	Mode	Method	Units
Uterus	All	All	Calculation after distance measurement	ml
	L	All	Distance Measurement	cm, mm
	H	All	Distance Measurement	cm, mm
	W	All	Distance Measurement	cm, mm
	Endo. Thick	All	Distance Measurement	cm, mm
	Uterine Tumor 1 All	All	Distance Measurement	cm, mm
	Uterine Tumor 1 L	All	Distance Measurement	cm, mm
	Uterine Tumor 1 H	All	Distance Measurement	cm, mm
	Uterine Tumor 1 W	All	Distance Measurement	cm, mm
	Cervix All	All	Volume Measurement	ml
	Cervix L	All	Distance Measurement	cm, mm
	Cervix H	All	Distance Measurement	cm, mm
	Cervix W	All	Distance Measurement	cm, mm
	Cervical Tumor All	All	Calculation after distance measurement	ml
Rt. Uterine A Lt. Uterine A Endometrial	Auto Trace	PW	Doppler spectrum trace	
	Limited Trace	PW	Doppler spectrum trace	
	Manual Trace	PW	Doppler spectrum trace	
	PSV	PW	Velocity Measurement	cm/s, m/s
	EDV	PW	Velocity Measurement	cm/s, m/s

Measurement Menu	Item	Mode	Method	Units
Rt. Ovary Lt. Ovary	All	All	Calculation after distance measurement	ml
	L	All	Distance Measurement	cm, mm
	H	All	Distance Measurement	cm, mm
	W	All	Distance Measurement	cm, mm
	Auto Trace	PW	Doppler spectrum trace	
	Limited Trace	PW	Doppler spectrum trace	
	Manual Trace	PW	Doppler spectrum trace	
	PSV	PW	Velocity Measurement	cm/s, m/s
	EDV	PW	Velocity Measurement	cm/s, m/s
	Ovarian Mass All	All	Calculation after distance measurement	ml
	Ovarian Mass L	All	Distance Measurement	cm, mm
	Ovarian Mass H	All	Distance Measurement	cm, mm
	Ovarian Mass W	All	Distance Measurement	cm, mm
Rt. Follicles Lt. Follicles	1 ~ 12	All	Volume calculated after distance measurement	cm, mm and ml
Rt. Cyst Lt. Cyst	All	All	Calculation after distance measurement	ml
	L	All	Distance Measurement	cm, mm
	H	All	Distance Measurement	cm, mm
	W	All	Distance Measurement	cm, mm
Pericystic	Auto Trace	PW	Doppler spectrum trace	
	Limited Trace	PW	Doppler spectrum trace	
	Manual Trace	PW	Doppler spectrum trace	
	PSV	PW	Velocity Measurement	cm/s, m/s
	EDV	PW	Velocity Measurement	cm/s, m/s

Most of the gynecology measurements are distance measurements and volume measurements, based on the distance measurement results. If multiple images, such as long axis images and transverse axis images are needed, press the **Freeze** button to switch to Scan Mode and obtain images from another perspective.

Cardiac Calculations

NOTE: Cardiac measurement is an optional item.

The measurement method for each item is the same as for basic measurements. Measured items are automatically recorded in a report.

NOTE:

- For information on basic measurement methods, see 'Basic Measurements' and 'Common Measurement Methods'.
- For references on measurement items, see the 'Reference Manual, Part 2'.

Dist. 20

Traces the cardiac circumference and then draws the cardiac axis. The system automatically draws 20 straight lines perpendicular to the axis and calculates its volume.

NOTE:

- In Dual 2D Mode, two images can be viewed simultaneously.
- For **RVAWd**, **RVIDd**, **RVAWs**, and **RVIDs**, see the LV measurement method.
- **MPA Diam**, **RPA Diam**, and **LPA Diam** are measured under Aortic Valve Level in Parasternal Short Axis.
- C Mode is mainly used for measuring reverse cardiac blood flow.
- As **PISA-Radius** or **PISA-Alias Vel.** measurements require Velocity values, you have to select color display for Velocity or Vel + Var in C Mode. For more information, see the 'Color Doppler Mode' section in 'Chapter 4. Diagnosis Mode'.
- Tissue Doppler can be measured in TDI Mode.

Adult Echo – Chamber Measurement Menu

[Figure 5.6 Adult Echo – Chamber Measurement Menu]

Measurement Menu	Item	Mode	Method	Units
LV (2D)	All LVd (2D)	All	Continuous measurement	
	IVSd	All	Distance Measurement	cm, mm
	LVIDd	All	Distance Measurement	cm, mm
	LVPWd	All	Distance Measurement	cm, mm
	All LVs (2D)	All	Continuous measurement	
	IVSs	All	Distance Measurement	cm, mm
	LVIDs	All	Distance Measurement	cm, mm
	LVPWs	All	Distance Measurement	cm, mm

Measurement Menu	Item	Mode	Method	Units
LV (M)	All LV (M)	M	Continuous measurement	
	IVSd	M	Distance Measurement	cm, mm
	LVIDd	M	Distance Measurement	cm, mm
	LVPWd	M	Distance Measurement	cm, mm
	IVSs	M	Distance Measurement	cm, mm
	LVIDs	M	Distance Measurement	cm, mm
	LVPWs	M	Distance Measurement	cm, mm
	LVET	M	Time Measurement	ms
	LVPEP	M	Time Measurement	ms
LV Vol. (Simpson)	LVEDV A4C	All	Dist 20	ml
	LVESV A4C	All	Dist 20	ml
	LVEDV A2C	All	Dist 20	ml
	LVESV A2C	All	Dist 20	ml
	LVEDV A4C AL	All	Dist 20	ml
	LVESV A4C AL	All	Dist 20	ml
	LVEDV A2C AL	All	Dist 20	ml
	LVESV A2C AL	All	Dist 20	ml
LV Mass	All	All	Continuous measurement	
	LVAd SAX PM Epi	All	Area Measurement	cm^2, mm^2
	LVAd SAX PM	All	Area Measurement	cm^2, mm^2
	LVLd Apical	All	Distance Measurement	cm, mm
	LV TE a	All	Distance Measurement	cm, mm
	LV TE d	All	Distance Measurement	cm, mm

Measurement Menu	Item	Mode	Method	Units
LA	All	All	Calculation after distance measurement	ml
	LA Major	All	Distance Measurement	cm, mm
	LA Minor	All	Distance Measurement	cm, mm
	LA Diam (2D)	All	Distance Measurement	cm, mm
	LA / Ao (2D)	All	Distance Measurement	cm, mm
	LA / Ao (M)	M	Distance Measurement	cm, mm
	LA Diam (M)	M	Distance Measurement	cm, mm
	LAEDV A4C	All	Area Measurement	cm^2, mm^2
	LAESV A4C	All	Area Measurement	cm^2, mm^2
	LAEDV A2C	All	Area Measurement	cm^2, mm^2
	LAESV A2C	All	Area Measurement	cm^2, mm^2
RV (2D)	RVAWd	All	Distance Measurement	cm, mm
	RVIDd	All	Distance Measurement	cm, mm
	RVAd	All	Area Measurement	cm^2, mm^2
	RVAWs	All	Distance Measurement	cm, mm
	RVIDs	All	Distance Measurement	cm, mm
	RVAs	All	Area Measurement	cm^2, mm^2
	RV Major	All	Distance Measurement	cm, mm
	RV Minor	All	Distance Measurement	cm, mm
RV (M)	All	All	Continuous measurement	
	RVAWd	M	Distance Measurement	cm, mm
	RVIDd	M	Distance Measurement	cm, mm
	RVAWs	M	Distance Measurement	cm, mm
	RVIDs	M	Distance Measurement	cm, mm
	RVPEP	M	Time Measurement	ms
	RVET	M	Time Measurement	ms
RA	RA Major	All	Distance Measurement	cm, mm
	RA Minor	All	Distance Measurement	cm, mm
	RAAd	All	Area Measurement	cm^2, mm^2
	RAAs	All	Area Measurement	cm^2, mm^2
	RAEDV	All	Dist 20	Ml
	RAESV	All	Dist 20	Ml

Measurement Menu	Item	Mode	Method	Units
Aorta	Ao Diam (2D)	All	Distance Measurement	cm, mm
	Ao Diam (M)	M	Distance Measurement	cm, mm
	Asc Ao Diam	All	Distance Measurement	cm, mm
	Desc Ao Diam	All	Distance Measurement	cm, mm
	Ao Arch Diam	All	Distance Measurement	cm, mm
	Ao Isth Diam	All	Distance Measurement	cm, mm
	Ao ST Junct Diam	All	Distance Measurement	cm, mm
	Ao Sinus Diam	All	Distance Measurement	cm, mm

Adult Echo-Valve Measurement Menu

[Figure 5.7 Adult Echo-Valve Measurement Menu]

Measurement Menu	Item	Mode	Method	Units
LVOT	Manual Trace	PW	Doppler spectrum trace	
	Vmax	PW	Velocity Measurement	cm/s, m/s
	VTI	PW	Doppler spectrum trace	cm, mm
	Diam	All	Distance Measurement	cm, mm
	HR	M, PW	Heart Rate	bpm

Measurement Menu	Item	Mode	Method	Units
AV	Cusp	All	Distance Measurement	cm, mm
	Cusp (M)	M	Distance Measurement	cm, mm
	Diam	All	Distance Measurement	cm, mm
	AVA Planimetry	All	Area Measurement	cm^2, mm^2
	Manual Trace	PW	Doppler spectrum trace	
	Vmax	PW	Velocity Measurement	cm/s, m/s
	PHT	PW	Time Measurement	ms
	VTI	PW	Doppler spectrum trace	cm, mm
	AccT / ET	All	Continuous measurement	
	AccT	PW	Time Measurement	ms
	ET	PW	Time Measurement	ms
	DecT	PW	Time Measurement	ms
	R-R Interval	M, PW	Heart Rate	bpm
AR	VCW	All	Distance Measurement	cm, mm
	PISA Rad	C	PISA-Radius	cm, mm
	Alias Vel.	C	Velocity Measurement	cm/s, m/s
	Manual Trace	PW	Doppler spectrum trace	
	Vmax	PW	Velocity Measurement	cm/s, m/s
	ed Vmax	PW	Velocity Measurement	cm/s, m/s
	PHT	PW	Time Measurement	ms
	VTI	PW	Doppler spectrum trace	cm, mm
	AccT	PW	Time Measurement	ms
	DecT	PW	Time Measurement	ms
	HR	M, PW	Heart Rate	bpm

Measurement Menu	Item	Mode	Method	Units
MV	All MV (M)	M	Distance Measurement	cm, mm
	Vp	M	Distance Measurement	cm, mm
	Diam 1	All	Distance Measurement	cm, mm
	Diam 2	All	Distance Measurement	cm, mm
	MVA Planimetry	All	Area Measurement	cm^2, mm^2
	Manual Trace	PW	Doppler spectrum trace	
	E-DT-A	PW	Time-Speed-Time Measurement	ms and m/s
	E/A	PW	Velocity Measurement	cm/s, m/s
	Vmax	PW	Velocity Measurement	cm/s, m/s
	PHT	PW	Time Measurement	ms
	AccT	PW	Time Measurement	ms
	DecT	PW	Time Measurement	ms
	A Dur.	PW	Time Measurement	ms
	ET	PW	Time Measurement	ms
	R-R Interval	M, PW	Heart Rate	bpm
MR	VCW	PW	Distance Measurement	cm, mm
	PISA Rad	C	PISA-Radius	cm, mm
	Alias Vel.	C	Velocity Measurement	cm/s, m/s
	Manual Trace	PW	Doppler spectrum trace	
	Vmax	PW	Velocity Measurement	cm/s, m/s
	VTI	PW	Doppler spectrum trace	cm, mm
	dp / dt	PW	Calculation after Time Measurement	mmHg/s
	HR	M, PW	Heart Rate	bpm
RVOT	Manual Trace	PW	Doppler spectrum trace	
	Vmax	PW	Velocity Measurement	cm/s, m/s
	VTI	PW	Doppler spectrum trace	cm, mm
	Diam	All	Distance Measurement	cm, mm
	HR	M, PW	Heart Rate	bpm

Measurement Menu	Item	Mode	Method	Units
PV	Ann Diam	All	Distance Measurement	cm, mm
	PVA Planimetry	All	Area Measurement	cm^2, mm^2
	Manual Trace	PW	Doppler spectrum trace	
	Vmax	PW	Velocity Measurement	cm/s, m/s
	PHT	PW	Time Measurement	ms
	VTI	PW	Doppler spectrum trace	cm, mm
	AccT / ET	All	Continuous measurement	
	AccT	PW	Time Measurement	ms
	ET	PW	Time Measurement	ms
	DecT	PW	Time Measurement	ms
	Q to PV Close	PW	Time Measurement	ms
	R-R Interval	M, PW	Heart Rate	bpm
PR	VCW	PW	Distance Measurement	cm, mm
	PISA Rad	C	PISA-Radius	cm, mm
	Alias Vel.	C	Velocity	cm/s, m/s
	Manual Trace	PW	Doppler spectrum trace	
	Vmax	PW	Velocity Measurement	cm/s, m/s
	MPA Vmax	PW	Velocity Measurement	cm/s, m/s
	PHT	PW	Time Measurement	ms
	VTI	PW	Doppler spectrum trace	cm, mm
	AccT	PW	Time Measurement	ms
	DecT	PW	Time Measurement	ms
	HR	M, PW	Heart Rate	bpm

Measurement Menu	Item	Mode	Method	Units
TV	Ann Diam	All	Distance Measurement	cm, mm
	Diam 1	All	Distance Measurement	cm, mm
	Diam 2	All	Distance Measurement	cm, mm
	TVA Planimetry	All	Area Measurement	cm^2, mm^2
	Manual Trace	PW	Doppler spectrum trace	
	Vmax	PW	Velocity Measurement	cm/s, m/s
	E/A	PW	Velocity Measurement	cm/s, m/s
	PHT	PW	Time Measurement	ms
	VTI	PW	Doppler spectrum trace	cm, mm
	AccT	PW	Time Measurement	ms
	DecT	PW	Time Measurement	ms
	A Dur.	PW	Time Measurement	ms
	Q to TV Open	PW	Time Measurement	ms
	R-R Interval	M, PW	Heart Rate	bpm
TR	VCW	PW	Distance Measurement	cm, mm
	PISA Rad	C	PISA-Radius	cm, mm
	Alias Vel.	C	Velocity Measurement	cm/s, m/s
	Manual Trace	PW	Doppler spectrum trace	
	Vmax	PW	Velocity Measurement	cm/s, m/s
	VTI	PW	Doppler spectrum trace	cm, mm
	dp / dt	PW	Calculation after Time Measurement	mmHg/s
	RAP	PW	RAP	mmHg
	HR	M, PW	Heart Rate	bpm

Adult Echo-System Measurement Menu

[Figure 5.8 Adult Echo-System Measurement Menu]

Measurement Menu	Item	Mode	Method	Units
Plum. Veins Hepatic Veins	S/D	PW	Continuous measurement	
	S Vmax	PW	Velocity Measurement	cm/s, m/s
	D Vmax	PW	Velocity Measurement	cm/s, m/s
	A Vmax	PW	Velocity Measurement	cm/s, m/s
	A Dur	PW	Time Measurement	ms

Measurement Menu	Item	Mode	Method	Units
Shunts	MPA Diam	All	Distance Measurement	cm, mm
	LPA Diam	All	Distance Measurement	cm, mm
	RPA Diam	All	Distance Measurement	cm, mm
	PEd	All	Distance Measurement	cm, mm
	PEs	All	Distance Measurement	cm, mm
	SVC S/D	PW	Continuous measurement	
	SVC S Vmax	PW	Velocity Measurement	cm/s, m/s
	SVC D Vmax	PW	Velocity Measurement	cm/s, m/s
	SVC A Vmax	PW	Velocity Measurement	cm/s, m/s
	SVC A Dur	PW	Time Measurement	ms
	IVC S/D	PW	Continuous measurement	
	IVC S Vmax	PW	Velocity Measurement	cm/s, m/s
	IVC D Vmax	PW	Velocity Measurement	cm/s, m/s
	IVC A Vmax	PW	Velocity Measurement	cm/s, m/s
	IVC A Dur	PW	Time Measurement	ms
Qp / Qs	Systemic VTI	PW	Doppler spectrum trace	cm, mm
	Plumonic VTI	PW	Doppler spectrum trace	cm, mm
	LVOT Diam	All	Distance Measurement	cm, mm
	RVOT Diam	All	Distance Measurement	cm, mm
Tissue Doppler	All LV TDI	PW	Continuous measurement	
	LV Peak E'	PW	Velocity Measurement	cm/s, m/s
	LV Peak A'	PW	Velocity Measurement	cm/s, m/s
	LV Peak S'	PW	Velocity Measurement	cm/s, m/s
	LV AccT	PW	Time Measurement	ms
	LV DecT	PW	Time Measurement	ms
	All RV TDI	PW	Continuous measurement	
	RV Peak E'	PW	Velocity Measurement	cm/s, m/s
	RV Peak A'	PW	Velocity Measurement	cm/s, m/s
	RV Peak S'	PW	Velocity Measurement	cm/s, m/s
	RV AccT	PW	Time Measurement	ms
	RV DecT	PW	Time Measurement	ms

Measurement Menu	Item	Mode	Method	Units
Tei Index	All LV	PW	Continuous measurement	
	LV TST	PW	Time Measurement	ms
	LV ET	PW	Time Measurement	ms
	LV IVCT	PW	Time Measurement	ms
	LV IVRT	PW	Time Measurement	ms
	All RV	PW	Continuous measurement	
	RV TST	PW	Time Measurement	ms
	RV ET	PW	Time Measurement	ms
	RV IVCT	PW	Time Measurement	ms
	RV IVRT	PW	Time Measurement	ms

Ped. Echo Measurement Menu

[Figure 5.9 Ped. Echo Measurement Menu]

Measurement Menu	Item	Mode	Method	Units
LV (2D)	All LVd (2D)	All	Continuous measurement	
	RVIDd	All	Distance Measurement	cm, mm
	IVSd	All	Distance Measurement	cm, mm
	LVIDd	All	Distance Measurement	cm, mm
	LVPWd	All	Distance Measurement	cm, mm
	All LVs (2D)	All	Continuous measurement	
	IVSs	All	Distance Measurement	cm, mm
	LVIDs	All	Distance Measurement	cm, mm
	LVPWs	All	Distance Measurement	cm, mm
	RVAWd	All	Distance Measurement	cm, mm
	LVEDV A4C	All	Dist 20	ml
	LVESV A4C	All	Dist 20	ml
	LVEDV A2C	All	Dist 20	ml
	LVESV A2C	All	Dist 20	ml

Measurement Menu	Item	Mode	Method	Units
RV (M)	All LV (M)	M	Continuous measurement	
	RVIDd	M	Distance Measurement	cm, mm
	IVSd	M	Distance Measurement	cm, mm
	LVIDd	M	Distance Measurement	cm, mm
	LVPWd	M	Distance Measurement	cm, mm
	IVSs	M	Distance Measurement	cm, mm
	LVIDs	M	Distance Measurement	cm, mm
	LVPWs	M	Distance Measurement	cm, mm
	RVAWs	M	Distance Measurement	cm, mm
Tissue Doppler	All LV TDI	PW	Continuous measurement	
	LV Peak E'	PW	Velocity Measurement	cm/s, m/s
	LV Peak A'	PW	Velocity Measurement	cm/s, m/s
	LV Peak S'	PW	Velocity Measurement	cm/s, m/s
	All RV TDI	PW	Continuous measurement	
	RV Peak E'	PW	Velocity Measurement	cm/s, m/s
	RV Peak A'	PW	Velocity Measurement	cm/s, m/s
	RV Peak S'	PW	Velocity Measurement	cm/s, m/s
Lt. Inflow	LA Diam (2D)	All	Distance Measurement	cm, mm
	MV Diam 1	All	Distance Measurement	cm, mm
	MV E-DT-A	PW	Continuous measurement	
	MV Dect			
	MR Vmax	PW	Velocity Measurement	cm/s, m/s
	MR dp / dt	PW	Calculation after Time Measurement	mmHg/s

Measurement Menu	Item	Mode	Method	Units
Lt. Outflow	LVOT Diam	All	Distance Measurement	cm, mm
	Ao Sinus Diam	All	Distance Measurement	cm, mm
	Ao Diam (2D)	All	Distance Measurement	cm, mm
	Ao ST Junct Diam	All	Distance Measurement	cm, mm
	Asc Ao Diam	All	Distance Measurement	cm, mm
	Ao Arch Diam	All	Distance Measurement	cm, mm
	Ao Isth Diam	All	Distance Measurement	cm, mm
	Desc Ao Diam	All	Distance Measurement	cm, mm
	AV Vmax	PW	Velocity Measurement	cm/s, m/s
	AR DecT	PW	Time Measurement	ms
	AR ed Vmax	PW	Velocity Measurement	cm/s, m/s
	AR PHT	PW	PHT	ms
Plum. Veins Hepatic Veins	S/D	PW	Continuous measurement	
	S Vmax	PW	Velocity Measurement	cm/s, m/s
	D Vmax	PW	Velocity Measurement	cm/s, m/s
	A Vmax	PW	Velocity Measurement	cm/s, m/s
	A Dur	PW	Time Measurement	ms

Measurement Menu	Item	Mode	Method	Units
Qp / Qs	Systemic VTI	PW	Doppler spectrum trace	cm, mm
	Pulmonic VTI	PW	Doppler spectrum trace	cm, mm
	LVOT Diam	All	Distance Measurement	cm, mm
	RVOT Diam	All	Distance Measurement	cm, mm
	SVC S/D	PW	Continuous measurement	
	SVC S Vmax	PW	Velocity Measurement	cm/s, m/s
	SVC D Vmax	PW	Velocity Measurement	cm/s, m/s
	SVC A Vmax	PW	Velocity Measurement	cm/s, m/s
	SVC A Dur	PW	Time Measurement	ms
	IVC S/D	PW	Continuous measurement	
	IVC S Vmax	PW	Velocity Measurement	cm/s, m/s
	IVC D Vmax	PW	Velocity Measurement	cm/s, m/s
	IVC A Vmax	PW	Velocity Measurement	cm/s, m/s
	IVC A Dur	PW	Time Measurement	ms
Rt. Inflow	RA Major	All	Distance Measurement	cm, mm
	TV Diam 1	All	Distance Measurement	cm, mm
	TR Vmax	PW	Velocity Measurement	cm/s, m/s
	RAP	PW	RAP	mmHg
	TV E/A	PW	Continuous measurement	
Rt. Outflow	RVOT Diam	All	Distance Measurement	cm, mm
	PV Ann Diam	All	Distance Measurement	cm, mm
	PV AccT	PW	Time Measurement	ms
	PR DecT	PW	Time Measurement	ms
	PR Vmax	PW	Velocity Measurement	cm/s, m/s
	MR dp / dt	PW	Calculation after Time Measurement	mmHg/s

Vascular Calculations

The measurement method for each item is the same as for basic measurements. Measured items are automatically recorded in a report.

NOTE:

- For information on basic measurement methods, see 'Basic Measurements' and 'Common Measurement Methods'.
- For references on measurement items, see the 'Reference Manual, Part 1'.

Carotid Measurement Menu

[Figure 5.10 Carotid Measurement Menu]

Measurement Menu	Item	Mode	Method	Units
Prox CCA Mid CCA Distal CCA Bulb ECA Prox ICA Mid ICA	Auto Trace	PW	Doppler spectrum trace	
	PSV	PW	Velocity Measurement	cm/s, m/s
	EDV	PW	Velocity Measurement	cm/s, m/s
	%StA	All	Area Measurement	%
	%StD	All	Distance Measurement	%
	IMT	All	Distance Measurement	cm, mm
Vertebral A General	Auto Trace	PW	Doppler spectrum trace	
	Limited Trace	PW	Doppler spectrum trace	
	Manual Trace	PW	Doppler spectrum trace	
	PSV	PW	Velocity Measurement	cm/s, m/s
	EDV	PW	Velocity Measurement	cm/s, m/s
	%StA	All	Area Measurement	%
	%StD	All	Distance Measurement	%
	Vesl. Area	All	Area Measurement	cm^2, mm^2
	Vesl. Dist.	All	Distance Measurement	cm, mm
Vol. Flow	Volume Flow(Auto)	PW	Automatic calculation	ml/m
	Volume Flow(D)	PW	Automatic calculation	ml/m
	TAMV	PW	Doppler spectrum trace	cm/s, m/s
	Vesl. Dist.	All	Distance Measurement	cm, mm
	Vesl. Area	All	Area Measurement	cm^2, mm^2

Auto IMT (Optional)

This function allows you to take IMT measurements easily and quickly.

NOTE:

- Auto IMT is available only under the following conditions:
  - Probe: Linear Probe
  - Application: Vascular
  - Diagnosis Mode: 2D, C or PD Mode (the button is enabled in the 2D menu)

Auto IMT Screen

Risk Color Bar

It is shown in colors based on the IMT thickness. If the thickness is <= 0.5 mm, the entire bar is shown in green. If the thickness is >= 1.1 mm, the entire bar is shown in red. For a thickness between these values, it is shown in the corresponding color.

Ruler and Range Bar

Use the trackball and **Set** button to specify the location and range at which IMT will be measured.

- Ruler: The grid unit is 10mm. This option is used when a vessel is lying laterally. At the measurement location, press the **Set** button to take IMT measurements at 10mm intervals.
- Range Bar: This option is used when a vessel is not lying laterally, or the length of a specific segment needs measuring. Press and hold the **Set** button at the start point, and then drag the trackball to specify the end point.

Intima and Adventitia Pair

- Between the Near and Far zones, the one with the higher QI is automatically selected as a measurement value and is represented by the appropriate color of the Risk Color Bar.
- A pair with a lower QI is represented by dark blue.
- Press the **Change** button on the control panel to move the Near and Far zones that are automatically selected with QI. The measurement value and color presentation are also changed. However, if QI is 0, it will not be changed.

Measurement Result Table

- Max: The maximum thickness of the Intima/Adventitia pair.
- Mean: The average thickness of the Intima/Adventitia pair.
- SD : Standard Deviation
- QI: The distance ratio of the measured point in a distance, for Quality Index measurement.
- Points: The total number of the measured Intima/Adventitia pairs.

[Figure 5.11 Auto IMT]

Auto IMT Measurement

1. After checking the probe, application and preset, start carotid measurement.
2. If the desired images are obtained, press **Freeze**. Use the trackball to select an image for IMT measurement.
3. Tap **Auto IMT** on the touch screen. The *Auto IMT* screen will appear.
   - ▶ If scanning is performed when the center of the vessel is aligned with the center of the image area, IMT measurement starts automatically.
4. Use the trackball and the **Set** button to set a location for IMT measurement.

Tips!

Operation #1, #2

If 'Operation #1, #2' in the user information area is followed, IMT measurement can be taken more easily.

- ▶ Select a point between Near and Far.
- ▶ If the vessel image quality is poor, select an area that is close to the Intima to be measured.
- ▶ If a detailed area has to be selected, use the Range Bar.

▶ Press the **Space Bar** on the keyboard to turn on/off the Intima and Adventitia Marker.

5. Once the measurement location is set, measurement values are listed in a table.

Auto IMT Measurements' Analysis

1. Tap **Analysis** on the touch screen. The *Analysis* screen appears.
2. Select the desired analysis among **Framingham/CHD**, **Risk Factor**, **Normal IMT**, and **User Graph** using the trackball and the **Set** button.

   ▶ A bar corresponding to the measurement result is displayed on each graph. However, no bar is displayed if the measurement result is smaller than Framingham/CHD or the Risk Factor.

Tips!

User Graph

You can use **User Graph** to adjust the graph and analyze the measurement results as you want.

3. To finish analysis, tap **Analysis** again on the touch screen.

The following materials were referred to when analyzing the measurements of Auto IMT.

■ Framingham/CHD

Correlation between the Framingham Risk Score and Intima Media Thickness: the Paroi Arterielle et Risque Cardio-vasculaire (PARC) Study.

Pierre-Jean Touboul, EricVicaut, Julien Labreuche, Jean-Pierre Belliard, Serge Cohen, Serge Kownator, Jean-Jacques Portal, Isabelle Pithois-Merli, Pierre Amarenco. On behalf of PARC Study participating physicians.

■ Risk Factor

Mannheim Carotid Intima-Media Thickness Consensus (2004~2006)

P.J. Touboul, M.G. Hennerici, S. Meairs, H. Adams, P. Amarenco, N. Borstein, L. Csiba, M. Desvarieux, S. Ebrahim, M. Fatar, R. Hermandez Hernandez, M. Jaff, S. Kownator, P. Prati, T. Rundek, M. Sitzer, U. Schiminke, J.-C. Tardif, A. Taylor, E. Vicaut, K.S. Woo, F. Zannad, M. Zureik.

Normal IMT

Simon, J . Gariepy, G. Chironi, J.L. Megnien, J. Levenson: Intima-media thickness: a new tool for diagnosis and treatment of cardiovascular risk. Journal of Hypertension 20:159-169, 2002.

[Figure 5.12 Analysis]

Saving Auto IMT Measurement Values

1. Select the direction of the measurement site by tapping **Direction** on the touch screen or using the dial-button.
2. Select the position of the measurement site by tapping **Position** on the touch screen or using the dial-button.
3. Select the name corresponding to the measurement site by tapping it on the touch screen. When you press this, the measurement values are saved and the Auto IMT Measurement Mode finishes. The details are displayed on the screen.

UE Artery Measurement Menu

[Figure 5.13 UE Artery Measurement Menu]

Measurement Menu	Item	Mode	Method	Units
Subclabian A Axillary A Brachial A Radial A Ulnar A SPA General	Auto Trace	PW	Doppler spectrum trace	
	Limited Trace	PW	Doppler spectrum trace	
	Manual Trace	PW	Doppler spectrum trace	
	PSV	PW	Velocity Measurement	cm/s, m/s
	EDV	PW	Velocity Measurement	cm/s, m/s
	%StA	All	Area Measurement	%
	%StD	All	Distance Measurement	%
	Vesl. Area	All	Area Measurement	cm^2, mm^2
	Vesl. Dist	All	Distance Measurement	cm, mm
Vol. Flow	Volume Flow(Auto)	PW	Automatic calculation	ml/m
	Volume Flow(D)	PW	Automatic calculation	ml/m
	TAMV	PW	Doppler spectrum trace	cm/s, m/s
	Vesl. Dist.	All	Distance Measurement	cm, mm
	Vesl. Area	All	Area Measurement	cm^2, mm^2
	HR	M, PW	Heart Rate	bpm

LE Artery Measurement Menu

[Figure 5.14 LE Artery Measurement Menu]

Measurement Menu	Item	Mode	Method	Units
CIA IIA EIA CFA SFA DFA Popliteal A ATA PTA Peroneal A DPA Metatarsal A Digital A	Auto Trace	PW	Doppler spectrum trace	
	Limited Trace	PW	Doppler spectrum trace	
	Manual Trace	PW	Doppler spectrum trace	
	PSV	PW	Velocity Measurement	cm/s, m/s
	EDV	PW	Velocity Measurement	cm/s, m/s
	%StA	All	Area Measurement	%
	%StD	All	Distance Measurement	%
	Vesl. Area	All	Area Measurement	cm^2, mm^2
	Vesl. Dist	All	Distance Measurement	cm, mm

Measurement Menu	Item	Mode	Method	Units
General	Auto Trace	PW	Doppler spectrum trace	
	Limited Trace	PW	Doppler spectrum trace	
	Manual Trace	PW	Doppler spectrum trace	
	PSV	PW	Velocity Measurement	cm/s, m/s
	EDV	PW	Velocity Measurement	cm/s, m/s
	%StA	All	Area Measurement	%
	%StD	All	Distance Measurement	%
	Vesl. Dist	All	Area Measurement	cm, mm
	Vesl. Area	All	Distance Measurement	cm^2, mm^2
	HR	M, PW	Heart Rate	bpm
Vol. Flow	Vol. Flow(Auto)	PW	Automatic calculation	ml/m
	Vol. Flow(D)	PW	Automatic calculation	ml/m
	TAMV	PW	Doppler spectrum trace	cm/s, m/s
	Vesl. Dist.	All	Distance Measurement	cm, mm
	Vesl. Area	All	Area Measurement	cm^2, mm^2
	HR	M, PW	Heart Rate	bpm

UE Vein Measurement Menu

[Figure 5.15 UE Vein Measurement Menu]

Measurement Menu	Item	Mode	Method	Units
Internal Jugular V Innominate V Subclavian V Axillary V Brachial V Basilic V Radial V Ulnar V	Auto Trace	PW	Doppler spectrum trace	
	Limited Trace	PW	Doppler spectrum trace	
	Vmax	PW	Velocity Measurement	cm/s, m/s
	Dur T	PW	Time Measurement	ms
General	Auto Trace	PW	Doppler spectrum trace	
	Limited Trace	PW	Doppler spectrum trace	
	Manual Trace	PW	Doppler spectrum trace	
	Vmax	PW	Velocity Measurement	cm/s, m/s
	Dur T	PW	Time Measurement	ms
	Vesl. Dist.	All	Distance Measurement	cm, mm
	Vesl. Area	All	Area Measurement	cm^2, mm^2
Vol. Flow	Vol. Flow(Auto)	PW	Automatic Calculation	ml/m
	Vol. Flow(D)	PW	Automatic Calculation	ml/m
	TAMV	PW	Doppler spectrum trace	cm/s, m/s
	Vesl. Area	All	Area Measurement	cm^2, mm^2
	Vesl. Dist.	All	Distance Measurement	cm, mm

LE Vein Measurement Menu

[Figure 5.16 LE Vein Measurement Menu]

Measurement Menu	Item	Mode	Method	Units
CIV IIV EIV CFV PFV SFV GSV Popliteal V LSV ATV PTV Peroneal V	Auto Trace	PW	Doppler spectrum trace	
	Limited Trace	PW	Doppler spectrum trace	
	Vmax	PW	Velocity Measurement	cm/s, m/s
	Dur T	PW	Time Measurement	ms
	Vesl. Dist.	All	Distance Measurement	cm, mm
General	Auto Trace	PW	Doppler spectrum trace	
	Limited Trace	PW	Doppler spectrum trace	
	Manual Trace	PW	Doppler spectrum trace	
	Vmax	PW	Velocity Measurement	cm/s, m/s
	Dur T	PW	Time Measurement	ms
	Vesl. Dist.	All	Distance Measurement	cm, mm
	Vesl. Area	All	Area Measurement	cm^2, mm^2
Vol. Flow	Vol. Flow(Auto)	PW	Automatic Calculation	ml/m
	Vol. Flow(D)	PW	Automatic Calculation	ml/m
	TAMV	PW	Doppler spectrum trace	cm/s, m/s
	Vesl. Area	All	Area Measurement	cm^2, mm^2
	Vesl. Dist.	All	Distance Measurement	cm, mm

Fetal Heart Calculations

The measurement method for each item is the same as for basic measurements. In addition, measurement items are similar to those for cardiac calculation. Measured items are automatically recorded in a report.

NOTE:

- For information on basic measurement methods, see 'Basic Measurements' and 'Common Measurement Methods'.
- For references on measurement items, see the 'Reference Manual Part 2'.

Fetal Heart – General Measurement Menu

[Figure 5.17 Fetal Heart – General Measurement Menu]

Measurement Menu	Item	Mode	Method	Units
LV Vol. (Simpson)	LVEDV A2C	All	Dist 20	ml
	LVESV A2C	All	Dist 20	ml
	LVEDV A4C	All	Dist 20	ml
	LVESV A4C	All	Dist 20	ml

Measurement Menu	Item	Mode	Method	Units
2D Echo	Asc Ao	All	Distance Measurement	cm, mm
	MPA Diam	All	Distance Measurement	cm, mm
	Duct Art	All	Distance Measurement	cm, mm
	LA Diam	All	Distance Measurement	cm, mm
	RA Diam	All	Distance Measurement	cm, mm
	IVS	All	Distance Measurement	cm, mm
	LVIDd	All	Distance Measurement	cm, mm
	LVIDs	All	Distance Measurement	cm, mm
	LVPW	All	Distance Measurement	cm, mm
	HrtC	All	Distance Measurement	cm, mm
CTAR	CTAR All (D)	All	Continuous measurement	%
	ThD ap	All	Distance Measurement	cm, mm
	ThD trans	All	Distance Measurement	cm, mm
	HrtD ap	All	Distance Measurement	cm, mm
	HrtD trans	All	Distance Measurement	cm, mm
	ThA	All	Area Measurement	cm^2, mm^2
	HrtA	All	Area Measurement	cm^2, mm^2
Fetal M-mode	Fetal M-mode (All)	M	Continuous measurement	cm, mm
	IVSd	M	Distance Measurement	cm, mm
	LVIDd	M	Distance Measurement	cm, mm
	LVPWd	M	Distance Measurement	cm, mm
	IVSs	M	Distance Measurement	cm, mm
	LVPWs	M	Distance Measurement	cm, mm
	RVDd	M	Distance Measurement	cm, mm

■ CTAR (Cardio-Thorax Area Ratio)

This measurement is for comparing the sizes of the fetus chest and heart. The comparison is made by obtaining the ThD ap, ThD trans, HrtD ap, and HrtD trans values.

$$CTAR = \frac{\text{HrtD ap} \times \text{HrtD trans}}{\text{ThD ap} \times \text{ThD trans}} \times 100$$

Fetal Heart – Doppler Measurement Menu

[Figure 5.18 Fetal Heart – Doppler Measurement Menu]

Measurement Menu	Item	Mode	Method	Units
MPA Duct Artriosus Asc Aorta Dsc Aorta IVC	Auto Trace	PW	Doppler spectrum trace	
	Limited Trace	PW	Doppler spectrum trace	
	Manual Trace	PW	Doppler spectrum trace	
	PSV	PW	Velocity Measurement	cm/s, m/s
	EDV	PW	Velocity Measurement	cm/s, m/s
	Fetal HR	M, PW	Heart Rate	bpm
Duct Venosus PLI	All	PW	Velocity Measurement	cm/s, m/s
	S Vmax	PW	Velocity Measurement	cm/s, m/s
	D Vmax	PW	Velocity Measurement	cm/s, m/s
	A Vmax	PW	Velocity Measurement	cm/s, m/s
	Fetal HR	M, PW	Heart Rate	bpm
MV TV	E/A	PW	Velocity Measurement	%
	E	PW	Velocity Measurement	cm/s, m/s
	A	PW	Velocity Measurement	cm/s, m/s
	MR Vmax	PW	Velocity Measurement	cm/s, m/s
	Fetal HR	M, PW	Heart Rate	bpm

Measurement Menu	Item	Mode	Method	Units
Tei Index	All	PW	Calculation after Continuous Measurement	
	TST	PW	Time Measurement	ms
	ET	PW	Time Measurement	ms
	Fetal HR	M, PW	Heart Rate	bpm

Urology Calculations

Before Taking Urology Measurements

Set the related menus for convenient measurement.

You can select the volume method for measurement. There are four types of volume method. The factor value can be set manually for the formulae that need it.

For more information on the measurement menus and settings, please refer to 'Measure Setup' in 'Chapter 7. Utilities'.

Urology Measurement Menu

[Figure 5.19 Urology Measurement Menu]

The measurement method for each item is the same as for basic measurements. Measured items are automatically recorded in a report.

- The measurement methods of each menu vary with the Volume Method, set at **Utility** > **Measure Setup** > **Urology**.
- If the measurement method of Volume is changed, the touch screen menu should be set up accordingly
- For information on basic measurement methods, see 'Basic Measurements' and 'Common Measurement Methods'.
- For references on measurement items, see the 'Reference Manual Part 2'.

3Distance 3 Distances

Calculate a volume by measuring three distances.

Measurement Menu	Item	Mode	Method	Units
WG Prostate Vol. T-Zone Vol. Bladder Vol.	All	All	Calculation after distance measurement	ml
	L	All	Distance Measurement	cm, mm
	H	All	Distance Measurement	cm, mm
	W	All	Distance Measurement	cm, mm
Residual Vol.	Pre All	All	Calculation after distance measurement	ml
	Pre L	All	Distance Measurement	cm, mm
	Pre H	All	Distance Measurement	cm, mm
	Pre W	All	Distance Measurement	cm, mm
	Post All	All	Calculation after distance measurement	ml
	Post L	All	Distance Measurement	cm, mm
	Post H	All	Distance Measurement	cm, mm
	Post W	All	Distance Measurement	cm, mm
Rt. / Lt. Renal Vol.	All	All	Calculation after distance measurement	ml
	L	All	Distance Measurement	cm, mm
	H	All	Distance Measurement	cm, mm
	W	All	Distance Measurement	cm, mm
	Renal Pelvis	All	Distance Measurement	cm, mm
General	Auto Trace	PW	Doppler spectrum trace	cm, mm
	Limited Trace	PW	Doppler spectrum trace	cm, mm
	Manual Trace	PW	Doppler spectrum trace	cm, mm
	PSV	PW	Velocity Measurement	cm/s, m/s
	EDV	PW	Velocity Measurement	cm/s, m/s
	%StA	All	Calculation after Area Measurement	%
	%StD	All	Calculation after distance measurement	%
	Vesl.Area	All	Area Measurement	cm^2, mm^2
	Vesl.Dist.	All	Distance Measurement	cm, mm

The measurements for Transitional Zone Prostate Volume, Bladder Volume, Left Renal Volume, and Right Renal Volume are the same as for Prostate Volume.

3 Distance * Factor

The same as for '3 Distances.' Volume is calculated based on Factor value.

Volume (ml) = Factor x Distance1 x Distance2 X Distance3

Ellipsoid

Calculate a volume by using the Main Diameter and Beside Diameter values.

Measurement Menu	Item	Mode	Method	Units
WG Prostate Vol. T-Zone Vol. Bladder Vol.	All	All	Calculation after distance measurement	ml
Residual Vol.	Pre Vol.	All	Calculation after distance measurement	ml
	Post Vol.	All	Calculation after distance measurement	ml
Rt. / Lt. Renal Vol.	All	All	Calculation after distance measurement	ml
	Renal Pelvis	All	Distance Measurement	cm, mm
General	Auto Trace	PW	Doppler spectrum trace	cm, mm
	Limited Trace	PW	Doppler spectrum trace	cm, mm
	Manual Trace	PW	Doppler spectrum trace	cm, mm
	PSV	PW	Velocity Measurement	cm/s, m/s
	EDV	PW	Velocity Measurement	cm/s, m/s
	%StA	All	Calculation after Area Measurement	%
	%StD	All	Calculation after distance measurement	%
	Vesl.Area	All	Area Measurement	cm^2, mm^2
	Vesl.Dist.	All	Distance Measurement	cm, mm

Sum of 20 DisksSum of 20 Disks

After measuring the circumference of a prostate, use the trackball and the **Set** button to calculate the volume by measuring the axis of the prostate.

Measurement Menu	Item	Mode	Method	Units
WG Prostate Vol. T-Zone Vol. Bladder Vol.	All	All	Calculation after Distance Measurement	ml
Residual Vol.	Pre Vol.	All	Calculation after Distance Measurement	ml
	Post Vol.	All	Calculation after Distance Measurement	ml
Rt. / Lt. Renal Vol.	Renal Pelvis	All	Distance Measurement	cm, mm
General	Auto Trace	PW	Doppler spectrum trace	cm, mm
	Limited Trace	PW	Doppler spectrum trace	cm, mm
	Manual Trace	PW	Doppler spectrum trace	cm, mm
	PSV	PW	Velocity Measurement	cm/s, m/s
	EDV	PW	Velocity Measurement	cm/s, m/s
	%StD	All	Calculation after distance measurement	%
	Vesl.Area	All	Area Measurement	cm^2, mm^2
	Vesl.Dist.	All	Distance Measurement	cm, mm

Abdomen Calculations

The measurement method for each item is the same as for basic measurements. Measured items are automatically recorded in a report.

NOTE:

- It is convenient to calculate each measurement value on the Spectral Doppler image.
- For information on basic measurement methods, see 'Basic Measurements' and 'Common Measurement Methods'.

Abdomen Measurement Menu

[Figure 5.20 Abdomen Calculations Measurement Menu]

Measurement Menu	Item	Mode	Method	Units
Liver Spleen Rt. Kidney Lt. Kidney	All	All	Calculation after distance measurement	ml
	L	All	Distance Measurement	cm, mm
	H	All	Distance Measurement	cm, mm
	W	All	Distance Measurement	cm, mm
Gallbladder	CBD	All	Distance Measurement	cm, mm
	GB Wall	All	Distance Measurement	cm, mm
	All	All	Calculation after distance measurement	ml
	L	All	Distance Measurement	cm, mm
	H	All	Distance Measurement	cm, mm
	W	All	Distance Measurement	cm, mm
Pancreas	Head	All	Distance Measurement	cm, mm
	Body	All	Distance Measurement	cm, mm
	Tail	All	Distance Measurement	cm, mm
	Duct	All	Distance Measurement	cm, mm
Bowel	Stomach Wall	All	Distance Measurement	cm, mm
	Small Bowel Wall	All	Distance Measurement	cm, mm
	Large Bowel Wall	All	Distance Measurement	cm, mm

Abd. Vascular Measurement Menu

[Figure 5.21 Abd. Vascular Measurement Menu]

Measurement Menu	Item	Mode	Method	Units
M Portal V M Hepatic V Splenic V Mid IVC Rt./ Lt. Renal V	Auto Trace	PW	Doppler spectrum trace	
	Limited Trace	PW	Doppler spectrum trace	
	Manual Trace	PW	Doppler spectrum trace	
	Vmax	PW	Velocity Measurement	cm/s, m/s
	Dur T	PW	Time Measurement	ms
	Vesl. Area	All	Area Measurement	cm^2, mm^2
	Vesl. Dist.	All	Distance Measurement	cm, mm
C Hepatic A R Hepatic A L Hepatic A Splenic A Mid Aorta Rt. Renal A Lt. Renal A Mid SMA IMA	Auto Trace	PW	Doppler spectrum trace	
	Limited Trace	PW	Doppler spectrum trace	
	Manual Trace	PW	Doppler spectrum trace	
	PSV	PW	Velocity Measurement	cm/s, m/s
	EDV	PW	Velocity Measurement	cm/s, m/s
	%StA	All	Calculation after Area Measurement	%
	%StD	All	Calculation after distance measurement	%
	Vesl. Area	All	Area Measurement	cm^2, mm^2
	Vesl. Dist	All	Distance Measurement	cm, mm

Small Parts Calculations

The measurement method for each item is the same as for basic measurements. Measured items are automatically recorded in a report.

NOTE:

- It is convenient to calculate each measurement value on the Spectral Doppler image.
- For information on basic measurement methods, see 'Basic Measurements' and 'Common Measurement Methods'.

Thyroid Measurement Menu

[Figure 5.22 Thyroid Measurement Menu]

Measurement Menu	Item	Mode	Method	Units
Mass 1~5 Thyroid Vol.	All	All	Calculation after distance measurement	ml
	L	All	Distance Measurement	cm, mm
	H	All	Distance Measurement	cm, mm
	W	All	Distance Measurement	cm, mm
Thyroid Flow	Auto Trace	PW	Doppler spectrum trace	
	Limited Trace	PW	Doppler spectrum trace	
	Manual Trace	PW	Doppler spectrum trace	
	PSV	PW	Velocity Measurement	cm/s, m/s
	EDV	PW	Velocity Measurement	cm/s, m/s
	%StA	All	Calculation after Area Measurement	%
	%StD	All	Calculation after distance measurement	%
	Vesl. Area	All	Area Measurement	cm^2, mm^2
	Vesl. Dist	All	Distance Measurement	cm, mm
	Vel. A	PW	Velocity Measurement	cm/s, m/s
	Vel. B	PW	Velocity Measurement	cm/s, m/s

Breast Measurement Menu

[Figure 5.23 Breast Measurement Menu]

Measurement Menu	Item	Mode	Method	Units
Mass1~8	All	All	Calculation after distance measurement	ml
	L	All	Distance Measurement	cm, mm
	D	All	Distance Measurement	cm, mm
	W	All	Distance Measurement	cm, mm
Breast Flow	Auto Trace	PW	Doppler spectrum trace	
	Limited Trace	PW	Doppler spectrum trace	
	Manual Trace	PW	Doppler spectrum trace	
	PSV	PW	Velocity Measurement	cm/s, m/s
	EDV	PW	Velocity Measurement	cm/s, m/s
	%StA	All	Calculation after Area Measurement	%
	%StD	All	Calculation after distance measurement	%
	Vesl. Area	All	Area Measurement	cm^2, mm^2
	Vesl. Dist.	All	Distance Measurement	cm, mm
	Vel. A	PW	Velocity Measurement	cm/s, m/s
	Vel. B	PW	Velocity Measurement	cm/s, m/s

Testis Measurement Menu

[Figure 5.24 Testis Measurement Menu]

Measurement Menu	Item	Mode	Method	Units
Mass 1~5 Testis Vol.	All	All	Calculation after distance measurement	ml
	L	All	Distance Measurement	cm, mm
	H	All	Distance Measurement	cm, mm
	W	All	Distance Measurement	cm, mm
Testis Flow	Auto Trace	PW	Doppler spectrum trace	
	Limited Trace	PW	Doppler spectrum trace	
	Manual Trace	PW	Doppler spectrum trace	
	PSV	PW	Velocity Measurement	cm/s, m/s
	EDV	PW	Velocity Measurement	cm/s, m/s
	%StA	All	Calculation after Area Measurement	%
	%StD	All	Calculation after distance measurement	%
	Vesl. Area	All	Area Measurement	cm^2, mm^2
	Vesl. Dist.	All	Distance Measurement	cm, mm
	Vel. A	PW	Velocity Measurement	cm/s, m/s
	Vel. B	PW	Velocity Measurement	cm/s, m/s

Superficial Measurement Menu

[Figure 5.25 Superficial Measurement Menu]

Measurement Menu	Item	Mode	Method	Units
Mass 1~5 Superficial Vol.	All	All	Calculation after distance measurement	ml
	L	All	Distance Measurement	cm, mm
	H	All	Distance Measurement	cm, mm
	W	All	Distance Measurement	cm, mm
Superficial Flow	Auto Trace	PW	Doppler spectrum trace	
	Limited Trace	PW	Doppler spectrum trace	
	Manual Trace	PW	Doppler spectrum trace	
	PSV	PW	Velocity Measurement	cm/s, m/s
	EDV	PW	Velocity Measurement	cm/s, m/s
	%StA	All	Calculation after Area Measurement	%
	%StD	All	Calculation after distance measurement	%
	Vesl. Area	All	Area Measurement	cm^2, mm^2
	Vesl. Dist.	All	Distance Measurement	cm, mm
	Vel. A	PW	Velocity Measurement	cm/s, m/s
	Vel. B	PW	Velocity Measurement	cm/s, m/s

TCD Calculations

NOTE:

- It is convenient to calculate each measurement value on the Spectral Doppler image.
- For information on basic measurement methods, see 'Basic Measurements' and 'Common Measurement Methods'.

General Measurement Menu

The measurement method for each item is the same as for basic measurements. Measured items are automatically recorded in a report.

[Figure 5.26 TCD Measurement Menu]

Measurement Menu	Item	Mode	Method	Units
ACA MCA PCA(P1) PCA(P2) Distal Basilar A Mid Basilar A Prox Basilar A General	Auto Trace	PW	Doppler spectrum trace	
	Limited Trace	PW	Doppler spectrum trace	
	Manual Trace	PW	Doppler spectrum trace	
	PSV	PW	Velocity Measurement	cm/s, m/s
	EDV	PW	Velocity Measurement	cm/s, m/s
	%StA	All	Calculation after Area Measurement	%
	%StD	All	Calculation after distance measurement	%
	Vesl. Area	All	Area Measurement	cm^2, mm^2
	Vesl. Dist	All	Distance Measurement	cm, mm
Vol. Flow	Vol. Flow(Auto)	PW	Automatic calculation	ml/m
	Vol. Flow(D)	PW	Automatic calculation	ml/m
	TAMV	PW	Doppler spectrum trace	cm/s or m/s
	Vesl. Dist.	All	Distance Measurement	cm, mm
	Vesl. Area	All	Area Measurement	cm^2, mm^2

Pediatric Hip Calculations

Pediatric Hip Measurement Menu

The measurement method for each item is the same as for basic measurements. Measured items are automatically recorded in a report.

NOTE: For information on basic measurement methods, see 'Basic Measurements' and 'Common Measurement Methods'.

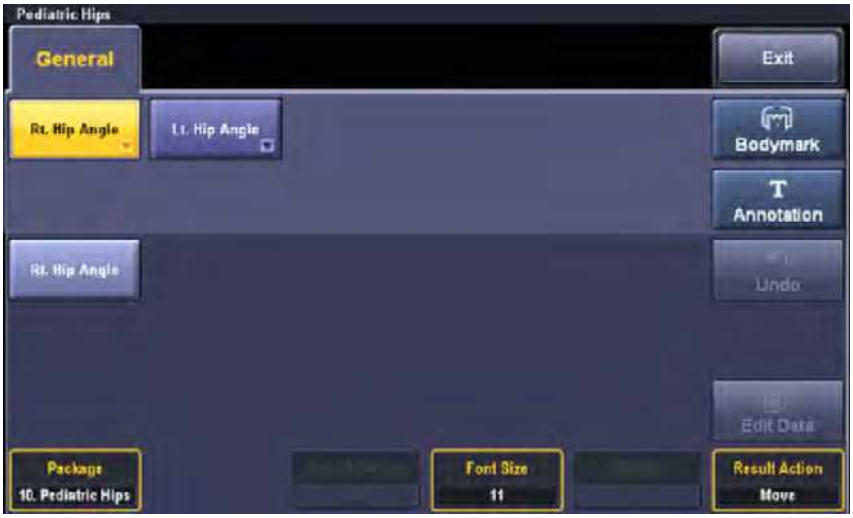

[Figure 5.27 Pediatric Hip Measurement Menu]

Measurement Menu	Item	Mode	Method	Units
Rt. Hip Angle Lt. Hip Angle	Hip Angle	All	Calculation of angle after measurement of three straight lines	

Measurement Methods

1. Specify the first straight line by using the trackball and the **Set** button.

   ▶ Use the trackball to place the cursor at the desired position and press the **Set** button.

Tips!

Repositioning Point

Instead of pressing the **Set** button to confirm the point position, you can press the **Change** button to reset it.

2. Repeat the process above to specify two more straight lines.
3. The angle between them will be calculated automatically.

   ▶ α: The angle made by the first and second straight line.

   ▶ β: The angle made by the first and third straight line.

4. When the measurement is finished, the result is shown on the screen.

See the table below for Hip Joint Type information:

Type	α	β
1a	60 ≤ α < 90	0 < ß < 55
1b	60 ≤ α < 90	55 ≤ ß < 180
2a/b	50 ≤ α < 60	0 < ß < 180
2c	43 ≤ α < 50	77 ≤ ß< 180
d	43 ≤ α < 50	0 < ß < 77
3/4	0 < α < 43	

[Table 5.2 Hip Joint Type Table]

Musculoskeletal Calculations

Measurement Menu

The measurement method for each item is the same as for basic measurements. Measured items are automatically recorded in a report.

NOTE: For information on basic measurement methods, see 'Basic Measurements' and 'Common Measurement Methods'.

[Figure 5.28 Musculoskeletal Measurement Menu]

Measurement Menu	Item	Method	Units
Shoulder Wrist Knee Ankle	1~10	Distance Measurement	cm, mm

Reports

Press the **Report** button on the control panel. The *Ultrasound Report* screen will appear.

NOTE: Only the reports of the applications that have measurement results are shown.

Report View

Report

Tap the **Report** button on the touch screen and the Report screen will appear. The screen will move to the *Ultrasound measure Report* screen.

The measurement results are summarized by application, and shown on the screen in a report format.

NOTE: Only the reports of applications that have measurement results are shown.

[Figure 5.29 Report Screen]

[Figure 5.30 Report- Touch Screen]

■ Scroll

Rotate the **Scroll** dial-button on the touch screen to move the Report page up or down. The position of the current page will be displayed next to 'Current Page' at the bottom of the screen.

Tips!

Moving the report page

You can move the report page using the scroll bar at the right of the screen.

■ Zoom/Fit

- **Zoom:** Rotate the **[3]** Zoom/Fit dial-button to zoom in or out of the Report page. The zoom ratio will be displayed next to 'Current Zoom' at the bottom of the screen.
- **Fit:** Select a display method for the Report page. Press the **[3]** Zoom/Fit dial-button to select one of the following three options. The selected method will be displayed next to 'Current Zoom' at the bottom of the screen.
  - Fit Width: The screen is adjusted in line with the width of the report.
  - Fit Height: The screen is adjusted in line with the height of the report.
  - Fit Dual Page: Two pages of the report are displayed on one screen.

Report For Echo paper

Set the preview of the report in print format.

Video Out Mode

Choose whether to fit the size of the Report screen to 1024 x 768.

Next App.

Tap **Next App.** on the touch screen. Reports for other diagnosis items are shown. Note that this function is available only when there are more than two diagnosis items which have measurement results.

Graph

NOTE: The graph function can be used only with OB reports.

Tapping **Graph** on the touch screen switches to the *Graph* screen. You can review the graph and history. The list of graphs appears on the left side of the screen.

NOTE:

- To display a graph, the LMP or Estab. Due Date should be saved under **Patient Information**, and the **GA** table and **Fetal Growth** table should be enabled.
- A graph will be created based on the patient ID, LMP and measurement date.

Select a Graph

Select a graph from the list. The graph will be shown on the screen.

Use the **Page** dial-button to select a graph. The current graph being selected is shown in yellow in the report page list.

You can also use the trackball and the **Set** button to check a checkbox from the list.

Click **Select All** in the list to select all the graphs.

Graph Layout

If the **2 x 2** checkbox is checked, 4 graphs will be displayed on the screen.

Specify a desired graph by checking the appropriate checkbox in the list of graphs.

Pctl. Criteria (Percentile Criteria)

Select from LMP, EstabDD and AUA, GA View.

- LMP: The GA is calculated based on the maternal LMP.
- Estab. DD: The GA is calculated based on the Estab. Due Date under Patient Information.
- AUA (Average US GA): The GA is calculated using the average values of several ultrasound measurements.

History

The current and past measurements for a fetus are displayed in a concise format.

Print Checked Graph

Set the graph layout when you wish to print the reports.

NOTE: Only the graphs selected from the list will be printed.

- Print Current Graph: Only the selected graph is printed.
- Print Checked Graph (1 x 1): The selected graph is printed in a 1 x 1 format.
- Print Checked Graph (3 x 2): The selected graph is printed in a 3 x 2 format.
- Print Screenshot: Capture the screen to print the graph.

Patient

View patient information, fetus information, and comments.

Measure

View measurement data.

Trend

Select a graph you want, or select all.

Tips! Different color or shape will be used for multiple fetuses to display the measurement.

[Figure 5.31 Graph]

History

NOTE: The history function can only be used with OB reports.

Tap **History** on the touch screen. The past and present measurement values of the fetus are displayed in a table format.

[Figure 5.32 History]

Tips!

Standard Deviation & Percentile

Among the OB information, the Growth table and the typical fetal distribution, for the same number of weeks, are used to determine the following information:

- The normal distribution curve.
- The measurements for an actual fetus or a position in EFW distribution.
- Whether a distribution point is within the normal range.

The number of weeks referenced for the Growth table can be set to LMP, Estab. Due Date, or Average US GA, under **Pctl. Criteria**. The typical setting is LMP.

When the LMP is not known or uncertain, or when the difference between the LMP and the Average US GA is substantial, care must be taken, as selecting different **Pctl.Criteria** can result in a significant difference.

The distribution of the number of weeks in the Growth table for the selected reference is a normal distribution. It is laterally symmetrical around 50% (the average), and it shows the distance from the average as a deviation. The deviation can be represented by Standard Deviation (SD) or Percentile.

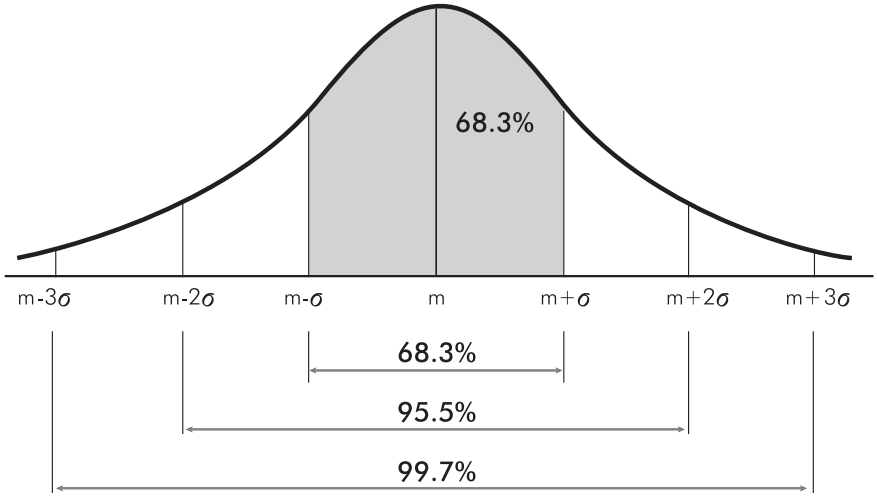

[Figure 5.33 The distribution of the Growth table for the selected number of weeks (m: Average, s: Standard Deviation)]

Tips!

When represented by SD, a point near the average indicates a value closer to ±0 SD and a point away from the average indicates a value closer to the maximum or minimum value. The greater part of the range falls within ±3 SD, and ±1 SD, representing 68.3% of the entire range. Thus it can be seen that most fetal measurements are tightly clustered around the average value.

The Percentile represents a point in distribution from between 0 and 100 inclusive. Therefore, the average point is represented as 50 Percentile.

As shown in the figure, the average point corresponds to 0 SD (that is, 50 Percentile). If a point is in the range between -1 SD and +1 SD, it falls within 68.3% of the entire range. This means that the point falls within the range between 16 and 84.

Further, if a point is in the range between -2 SD and +2 SD, it falls within 95.5% of the entire range. Thus, the point falls in the range between 3 and 97.

The SD and Percentile are interchangeable. Percentile can be used when a fetal measurement ranking is desired, and SD can be used when the distance between actual fetal measurements and the average measurement is sought.

While the range of Growth table references that are primarily used with OB measurement data varies depending on the user, the typical range accepted by most users is as below:

1) When references are created based on SD:

- -2.0 SD – +2.0 SD (when converted to Percentile: 2.28 – 97.72 Percentile)
- -1.5 SD – +1.5 SD (when converted to Percentile: 6.68 – 93.32 Percentile)
- -1.0 SD – +1.0 SD (when converted to Percentile: 15.87 – 84.13 Percentile)

2) When references are created based on Percentile:

- 2.5 – 97.5 Percentile (when converted to SD: -1.96 SD – 1.96 SD)
- 5.0 – 95.0 Percentile (when converted to SD: -1.645 SD – 1.645 SD)
- 10.0 – 90.0 Percentile (when converted to SD: -1.288 SD – 1.288 SD)

Editing Reports

Edit Data

Tapping **Edit Data** on the touch screen switches to the *Report Edit* screen. Edit the measurement results or change how to display the measured values.

Change the measured values using the trackball and the **Set** button. The changed values are shown in gray.

To finish editing after saving the changes, tap **Ok** on the touch screen or click **Ok** in the monitor screen. If you wish to end the edit screen without saving changes, tap **Cancel**. Tap **Next App** on the touch screen to edit reports for other diagnosis items.

Page

Move between report pages by turning the **Page** dial-button on the touch screen. The current page being reviewed is shown in yellow in the report pages list.

Measurement Display Method

The product allows you to measure one measurement item several times. However, only the first three measurement results are saved in a report.

When taking measurements for the same item more than once, measurements can be displayed in four ways. On the *Edit Report* screen, you can specify or change the measurement display method.

- **Avg:** Obtain the average of the measurements and display it on the screen.
- **Last:** Display the last measurement on the screen.
- **Max:** Display the largest value of the measurements on the screen.
- **Min:** Display the smallest value of the measurements on the screen.

[Figure 5.34 Edit Report]

Fetal Description

Move the trackball and select **Fetal Description**. This item only becomes active when OB measurement is available. You can select **Normal**, **Abnormal**, **Not seen**, and **Seen** for each option. However, for Placenta Previa you can select either **Yes** or **No**. If you select one of the group selection items in the combo box, it will be applied to all items.

[Figure 5.35 Comment]

Comment

Tap **Comment** on the touch screen. A screen in which you can enter opinions appears.

To finish editing after saving the changes, tap **Ok** on the touch screen, or click **Ok** on the monitor screen. If you wish to end the edit screen without saving changes, tap **Cancel**.

Comment Editor

Tap **Comment** button on the touch screen, and then tap Comment Editor.

Enter your comment and tap Apply to apply it now.

Tap Save to save up to 10 comments. To close, tap Close

Next App.

Tap **Next App.** on the touch screen to edit reports for other diagnosis items.

[Figure 5.36 Comment]

[Figure 5.37 Comment Editor]

Edit Template

Tap **Edit Template** on the touch screen. You may change various settings to configure the report.

[Figure 5.38 Edit Template]

Layout

General

Select the basic form of the report.

- ▶ Full: All measurement values are shown.
- ▶ Short: Only the final results (Avg., GA, Pctl) of the measurement values are shown.
- ▶ 2 Columns: Measurements are shown in two columns.

Report

Patient Info.

Select the page range for patient information.

- All pages: The patient information is displayed on every page.
- Only 1st Page: The patient information is displayed only on the first page.

Report

- Header 1/2: Set the content to be displayed in the header of the report.
- Footer: Set the content to be displayed in the footer of the report.

Title

- Ultrasound Report: This is the default title to be displayed on reports. The user may edit this title freely.
- Institution: Set the title from Setup > General > Title > Institute.

Logo

Select whether or not to display the logo at the top of the page.

Show Date in footer

Select whether or not to insert the print date in the report.

Change Logo

Press this button, and the dialog window will appear. You can select JPEG or BMP format on USB or CD-ROM.

NOTE: The file does not appear in the list if the file name is in a language that is not supported by this product.

Print

Range

- All Pages: This is the system's default setting; all pages are printed.
- Current Page: Only the current page is printed.

Color

- Black and White: This is the system's default setting; prints black text on a white background.
- Same as Preview: The report is printed in the same colors as shown in the preview.

NOTE: If the printer type does not match the report type, a warning dialog will appear.

Insert Image

Select this if you want to attach images to the report. Tap **Insert Image** on the touch screen, and a window for selecting images will appear.

[Figure 5.39 Insert Image]

1. Select images from the Image List. The selected images will appear in View.
2. You may enter a description in the Description field. Press Add to include the description you have entered at the bottom of the report.
3. When you select an image in Selected Images, the Modify button is enabled and you can modify the description.
4. Press OK to save. The selected image will be included in the Report screen.

Data Management

Store SR

Becomes active when DICOM option is turned on.

Tapping **Store SR** on the touch screen saves the SR file containing the measurements.

Export

Tap **Export** on the touch screen. The *Export* window appears, allowing you to save the report in external storage media.

When the *Export* window appears, specify the directory, drive, file name, and file format. Click **Ok** on the screen to save the report. Click **Cancel** to cancel.

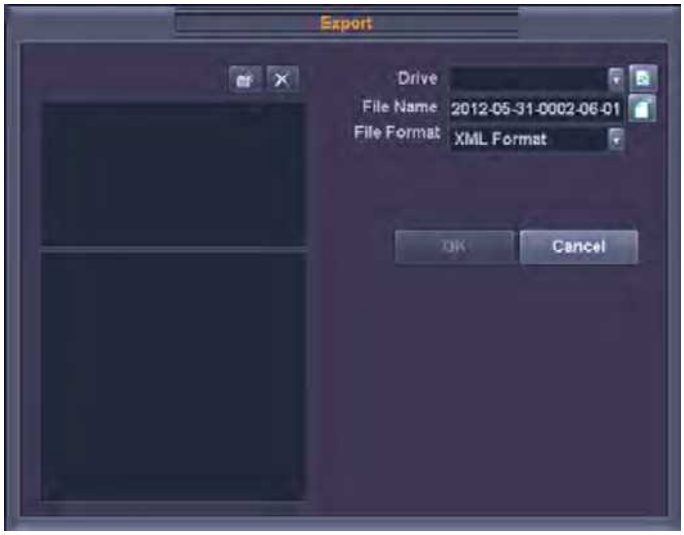

[Figure 5.40 Export]

Data Transfer

Tap **Data Transfer** on the touch screen. A report can be sent using the RS232C cable connected to the system.

To use this button,

1. Connect the RS232C cable to the console.
2. Select **Open Line Transfer** from the **Utility** > **Setup** > **Peripherals** > **Peripherals** > **COM** menu.

NOTE: Select the **Utility** > **Measure Setup** > **General** > **Data Transfer** > **Serial Transfer** menu to set the type of data to transfer. For more information, refer to 'Chapter 7. Utilities'.

Tips!

Printing Reports

Press the **Print 1** (or **Print 2**) button on the control panel. The report is printed out via a connected printer.

NOTE: Specify the printer for printing measurement reports from **Utility** > **Setup** > **Peripherals** > **Print Setup** > **Measure Report Print**. For more information, refer to the Peripherals section of 'Chapter 7. Utilities'.

Closing Reports

Tap **Exit** on the touch screen, or press the **Exit** button on the control panel.

Compare Mode Screen

As in Exam Mode, exams for each ID appear on the screen In addition, images for the selected exam are displayed in a thumbnail format.

Searching Exam

As in Exam Mode, click the **Exam Search** icon.

Select an image

Use the Trackball and the **Set** button to select an image from the thumbnail list. The selected image is highlighted in yellow in the list. Select a location on the screen where the image will be displayed, and then the selected image will appear.

NOTE: Only scan data can be retrieved into the image area.

Thumb Scroll

The image of the previous or next page is displayed on the thumbnail list.

To do this, use the **Thumb Scroll** dial-button on the touch screen. Rotating the dial-button to the left displays the previous page's images in the thumbnail list. Rotating it to the right displays the next page's images in the thumbnail list.

Exam Tool

Use the icon or the dial-button on the touch screen. Placing the cursor near an icon displays the icon's name.

A: Exam Search
B: Distance Caliper
C: Ellipse Caliper
D: Text Annotate
E: Print Image
F: Send Image to DICOM Storage
G: Send Image to DICOM Print
H: Export Image
I: DICOM Flush
J: Send E-mail
K: Delete Image
L: Select All Images
M: Deselect All Images
N: Device
O: Exit
P: Layout

[Figure 6.16 Exam Tools]

Layouts

You can adjust the number of images displayed on the screen. Click **Layout** and use the dial-button or tap the appropriate button on the touch screen. A maximum of 16 images (4 X 4) can be compared at the same time.

The numbers shown in the layout section indicate the column and row of an image to display on the screen. You can change the numbers shown in the layout section to configure various layouts.

Displaying in Full Screen

Place the cursor on an image and press the **Set** button twice, and then the image will be displayed in full screen.

Selecting Multiple Images

While holding down the **Ctrl** key, use the Trackball and the **Set** button to select an image. The selected image is highlighted in yellow.

Selecting All Images

Click the **Select All Images** icon on the screen. All images saved for the current exam are selected and highlighted in yellow.

Deselecting All Images

Click the **Deselect All Images** icon on the screen. All images are deselected and no longer highlighted.

Menu

Click the button located at the lower left corner of an image, and the post-processing menu will appear. Use the menu to adjust the image for diagnosis. The image is not saved with the post-processing effects.

NOTE: Cine images cannot be only played in any layout with an image grid greater than 2 x 2.

[Figure 6.17 Post Processing Menu]

Reviewing 3D Images

If the saved image is 3D, the 3D Indicator appears at the bottom of the image. Click **3D** and the *3D View* screen will appear, allowing you to review the image.

Reviewing Cine

If the saved image is Cine, the playback and search scroll bar appears at the bottom of the image. You can play, pause, stop or search forward/backward with the scroll bar.

[Figure 6.18 Cine Scroll Bar]

NOTE: Cine images cannot be played in any layout with an image grid greater than 2 x 2.

Searching Exam

Click the **Exam Search** icon on the screen. *Patient Information's* **search** tab screen is shown. Search the information stored in the system for patient information.

For more information, refer to 'Chapter 3. Starting Diagnosis'.

Distance

Click the **Distance Caliper** icon on the screen. You can measure the distance between two points on an image. Measurement results are not saved.

1. Place the cursor over an image and press the **Set** button. The image will be resized to its original size.
2. Measure the desired distance. Measurement-taking methods are identical to those described in 'Chapter 5. Measurements and Calculations'.
3. Press the **Exit** button on the control panel, and then Click the **Distance Caliper** icon again to finish measurement.

Measurement of Circumference and Area

Click the **Ellipse Caliper** icon on the screen. You can measure the circumference and area of the desired area in an image. Measurement results are not saved.

1. Place the cursor over an image and press the **Set** button. The image will be resized to its original size.
2. Measure the circumference and area of the desired area. For measurement instructions, refer to the 'Basic Measurements' section in 'Chapter 5. Measurements and Calculations'.
3. Press the **Exit** button on the control panel and then Click **Ellipse Caliper** icon again to finish measurement.

Typing Text

Click the **Text Annotation** icon on the screen. You can enter text into an image.

1. Place the cursor over an image and press the **Set** button. The image will be resized to its original size.
2. Position the cursor on the desired area and enter text.
   - ▶ Font Color: Change the font color.
   - ▶ Font Size: Change the font size.
   - ▶ Language: Select a language.

NOTE: This button only appears on the screen if the product supports Asian patient names.

3. Press the **Set** button to confirm the text.
4. Press the **Exit** button on the control panel and then Click the **Text Annotation** icon again to finish measurement.

Printing Image

1. Click the **Print Image** icon on the screen. The *Image Print* window will appear.
2. Open the **Setup** and **Comment** tabs and configure the options.
   - ▶ To delete any entries made in the **Comment** tab, click **Clear**.
3. Press the **Print** button to print the image. Click **Close** to cancel.

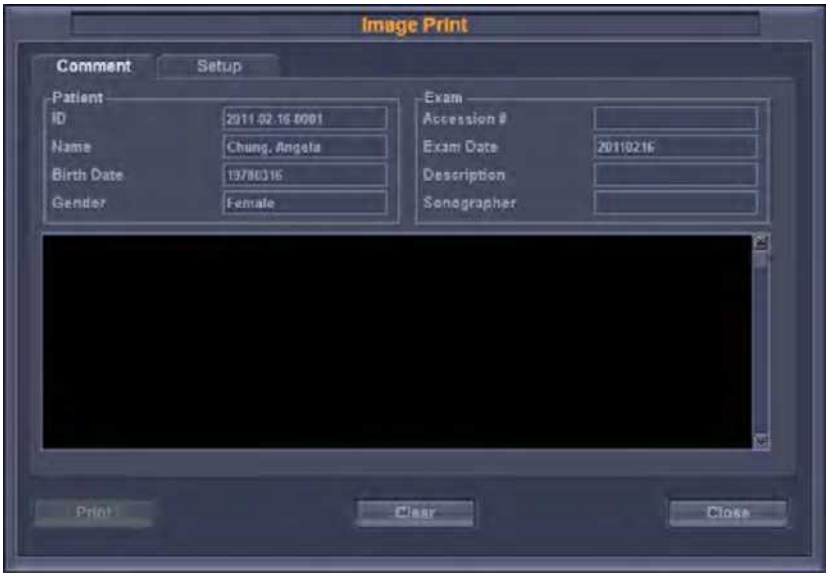

[Figure 6.19 Image Print]

Transferring Images via DICOM

Transfer the selected image and measurement data via DICOM. The icon is only enabled when an image is selected. The icon is disabled in a system where DICOM is not enabled.

1. After selecting an image, Click the **Send Image to DICOM Storage** icon on the screen. The *DICOM Storage* window will appear.
2. Click the **Transfer** button to transfer the selected image to the DICOM server. Click **Close** to cancel.

[Figure 6.20 DICOM Storage]

Printing via DICOM

You can print the selected images via DICOM. The icon is only enabled when an image is selected. The icon is disabled in a system where DICOM is not enabled.

1. After selecting an image, Click the **Send Image to DICOM Print** icon on the screen. The *DICOM Printer* window will be displayed.
2. Click the **Transfer** button to transfer the selected image to the DICOM server and print it. Click **Close** to cancel.

[Figure 6.21 DICOM Printer]

Transferring Images

NOTE: Image transfer will not be performed if there are spaces in the file or directory name.

1. Click the **Export Image** icon on the screen. The *Image Export* window will be displayed.
2. Specify the various parameters, such as directory, drive, filename and file format.
3. Click the **Export** button to start a transfer. Click **Close** to cancel.

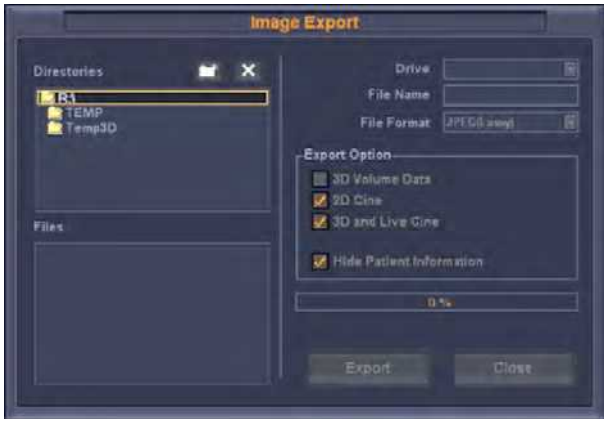

[Figure 6.22 Image Export]

DICOM Flush

Click the **DICOM Flush** icon. This transfers all images that have been stored locally up to that point to the DICOM Storage server.

Sending in E-mail

1. Click the **Send E-mail** icon. The *E-mail* window will appear.
2. Specify the various parameters, such as sender and recipient.
3. Check the images that you want to attach from the thumbnail list, and then enter the body text.
4. Click the **Send** button to transfer the selected image. Click **Cancel** to cancel.

NOTE:

When e-mail cannot be transferred, even though the mail server is working properly, please check the following:

- The connection of the LAN cable
- Settings from **Utility** > **Setup** > **Miscellaneous** > **E-mail**
- Whether or not ICMP (ping) is open for the corresponding Mail Server. If ICMP (ping) is closed, the E-mail function may not work properly.

[Figure 6.23 E-mail]

Deleting Images

Click the **Delete Image** icon. Press **OK** to delete the selected image. Please note that images for the current patient under diagnosis cannot be deleted.

Storage Manager

Click the **Device** icon. The *Storage Manager* window will appear. For more information about Storage Manager, refer to 'Chapter 7. Utilities'.

Closing SONOVIEW

Click the **Exit** icon on the screen. Alternatively, you can press the **SONOVIEW** button or the **Exit** button on the control panel to close SONOVIEW.

Chapter 7

Utilities

▣ ***System Settings*** ***7-3***

General 7-4
Display 7-9
Annotation 7-12
Peripherals 7-18
User Defined Keys 7-20
Miscellaneous 7-23
Options 7-29
DICOM Setup (Optional) 7-31
Auto Calc 7-46
About 7-47

▣ ***Measure Setup*** ***7-48***

Measure Menu 7-49
General 7-52
Obstetrics 7-62
Cardiac 7-72
Vascular 7-74
Urology 7-76
Fetal Heart 7-78

Chapter 7

▣ ***Utility*** ***7-79***

Post Curve 7-80

ECG 7-85

Histogram 7-87

Biopsy 7-89

ADVR 7-92

Help 7-102

Storage Manager 7-102

Power Management 7-104

System Settings

This mode is used for system settings. It does not affect image output. The setup may be modified depending on specific needs or preferences.

1. Tap the **Utility** > **Setup** buttons on the touch screen.
2. The *Settings* screen will appear. Select a tab that has items to specify.

Tips!

Selecting a tab

You can select a desired tab in either one of two ways. Select the method that suits you.

- ▶ Use the trackball and the **Set** button to select a tab.
- ▶ Tap a corresponding button on the touch screen.

3. Specify settings for each item.
4. Save and close the settings. Click the **Close** button on the monitor screen or the **Exit** button on the touch screen or the control panel to switch to Scan Mode. Tap **Return** on the touch screen to go back to the Utility menu.

[Figure 7.1 Setup – Touch Screen]

General

Select the General tab on the *Setup* screen. Or tap **General** on the touch screen. You can specify general settings such as title settings.

[Figure 7.2 Setup – General]

Titles

You can specify the information that is displayed in the title area on the screen.

Institution

Enter the name of the hospital/institution where the product is installed.

NOTE: You cannot input the following characters: #, [, ", :, ?, |, \, "

Department

Enter details about the medical institution or the organization. This information is used to identify information transferred via DICOM.

Date

The current date is displayed. To change the date, click .

NOTE:

- You cannot change the date and time when a patient ID has been registered. To change the date and time, you should finish the current diagnosis by pressing the **End Exam** button on the control panel.
- You can select a year from 2006 to 2027.

Tips!

How to set the date and time

1. Click next to the Date (or Time) field.
2. Set the date and time by using the trackball and the **Set** button on the control panel.
3. If it is properly set, click **Apply** to apply changes. Click **OK** to close the *Date & Time* window. To cancel, click **Cancel** or press the **Exit** button on the control panel.

[Figure 7.3 Date & Time]

Date Format

Specify the date format. Select a desired date format by clicking the **combo** button. The date format that you specify will be applied to various date fields in Patient Information.

Time

The current time is displayed.

Time Format

Specify the time format. Select a desired time format (12 Hour or 24 Hour) by pressing the **combo** button.

Store Clip

Store Clip Method

Specify the method and range in which an image is acquired and saved.

You can select ECG Beat, Time or Manual. Note that ECG Beat can be selected only when ECG is on.

- ECG Beat: Specify the heart beat as 1 – 8 beats.
- Time: Specify it as 1 – 50 seconds.
- Manual: Save images automatically for 50 seconds after tapping pressing the **Store Clip** button.

Cine Loop Period

- Prospective: When the **Store Clip** button is pressed during scanning, the subsequent images are saved.
- Retrospective: When the **Store Clip** button is pressed during scanning, the previous images are saved.

NOTE: To configure the **Store Clip** button, go to **Utility** > **Setup** > **User Defined Key** > **User Key 2, 3**.

Control

Trackball Speed for Scan Mode

Specify the trackball speed as Slow, Normal, or Fast.

Trackball Speed for Measurements

Specify the trackball speed as Slow, Normal, or Fast. Slower speeds allow more precise measurements.

Scan Mode

Simultaneous Mode

You can decide whether to enable Simultaneous Mode in Spectral Doppler Mode, using the following three options:

- **Off**: Select this if you do not wish to use Simultaneous Mode.
- **Allow B/PW**: Select this if you do not wish to use Simultaneous Mode in 2D/C/PW Modes, but do wish to use it in 2D/PW Mode.
- **Allow B/C/PW**: Select this if you wish to use Simultaneous Mode for both 2D/PW Mode and for 2D/C/PW Modes.

Dual Mode

Select whether to activate the Change window in Dual Mode.

Dual Live

Select the position of the Color Doppler Mode in Dual Live Mode.

- Left/Top: Color Doppler Mode is located in the left or upper part of the screen.
- Right/Bottom: Color Doppler Mode is located in the right or lower part of the screen.
- Dual Live Left-Right Dual Only: The **Top-Bottom** Dual button disappears when you check this checkbox.

Freeze Action

Select a function to execute when the **Freeze** button on the control panel is pressed. Available options are BodyMarker, Caliper, Measure and None.

End Exam Action

- End Exam Only: Pressing the **End Exam** button on the control panel exits Exam Mode and switches to the B Mode *Scan* screen.
- End Exam + Patient: Pressing the **End Exam** button on the control panel switches to the *Patient Information* screen.

Options

You can specify more than one item. Select an item with the trackball or the **Set** button to check or uncheck it.

- **Auto Freeze**: The Scan Mode is frozen automatically when the product is not used for 10 minutes.

NOTE: In Live 3D Mode, Auto Freeze is activated when the product is not used for 20 minutes.

- **HPRF**: Select whether to activate HPRF (High Pulse Repetition Frequency), which is supported in PW Spectral Doppler Mode. Check the checkbox to use the HPRF function.
- **Color Map Auto Invert**: Check this checkbox to automatically highlight the Color Map. This is only applied when you change Steer in 2D/C/D Mode, C Mode, or DPDI Mode in PD Mode.
- **M/PW Loop Side by Side**: Add Loop Side by Side display in M Mode or Power Spectral Doppler Mode.
- **Width Rescale**: Automatically fit the image size to the screen size, when the depth of a 2D image is adjusted. This function can be used only with a Linear Probe.

Display

Select the Display tab in the *Setup* screen. Or tap Display on the touch screen. Specify display-related options.

[Figure 7.4 Setup – Display]

Display

Options

You can specify more than one item. Select an item with the trackball or the **Set** button to check or uncheck it.

- Name + Age: Select whether to display the name and age underneath the patient ID.
- Name + Birthday: Select whether to display the name and date of birth underneath the patient ID.

NOTE: "Name + Age" and "Name + Birthday" cannot be used simultaneously.

- TGC Line: This sets whether to display the TGC line. When TGC Line is Off, the TGC line appears when you set the TGC line, and then disappears after three seconds.
- Image Info: This sets whether to display image information. When the image information interferes with an image and is turned off, it will not be displayed.
- Display Blank: Select whether to display the screen saver. When this is On, you can set the screen saver activation time to a period of between 1 and 30 minutes.

- ▶ TI (Thermal Index) Display: Specify the TI to display on the screen as TIs (Soft tissue Thermal Index), TIb (Bone Thermal Index) or TIc (Cranial bone Thermal Index).

■ Doppler Axis

Select the units of measurement for the axis scale in Spectral Doppler Mode.

- ▶ Velocity: Specify the Doppler axis scale unit as cm/s (m/s).
- ▶ Frequency: Specify the Doppler axis scale unit as kHz.

■ LMP / GA Display

Specify how the LMP, GA and EDD entered in the *Patient Information* screen will be displayed on the monitor screen. Select two from LMP, GA and EDD.

- ▶ Information Bar (Replace ID): Replace the ID in the title area.
- ▶ Information Bar (Replace Name): Replace the patient name in the title area.
- ▶ Information Bar (Replace App.): Replace the application in the title area.
- ▶ Measure Result: The measurement results are displayed after measurement.
- ▶ None: None of the options are displayed on the screen.

Font

■ Font

Specify the target for which you want to set the font. Choose from Document Font and Measure Result Font.

■ Font Name

Select the font type to use.

■ Font Size

Select the font size to use.

■ Font Color

Select the font color to use.

Preview

The *Preview* window displays the font you selected.

Default

This sets the system's default fonts. The default settings are as follows:

	Document Font	Measure Result Font
Font Name	Helvetica	Verdana
Font Size	11	11
Font Color	White	Yellow

NOTE: Certain fonts may not appear correctly on the screen.

Annotation

Select the Annotate tab in the *Setup* screen. Or tap **Annotate** on the touch screen. Specify display-related options.

[Figure 7.5 Setup – Annotation]

Screen Keyboard

Screen Keyboard

You can directly enter patient information by using the on-screen keyboard on the *Patient Information* screen. Setting the screen keyboard to On (see Figure 7.5 above) enables screen keyboard support.

NOTE: When you enter a birth date or age, the numerical on-screen keyboard is activated.

BodyMarker

Size

Set the BodyMarker size (Small, Medium, or Large).

Option

- BodyMarker Auto Active: Set whether to activate BodyMarker Mode automatically when changing an active image region.

▶ BodyMarker Edit

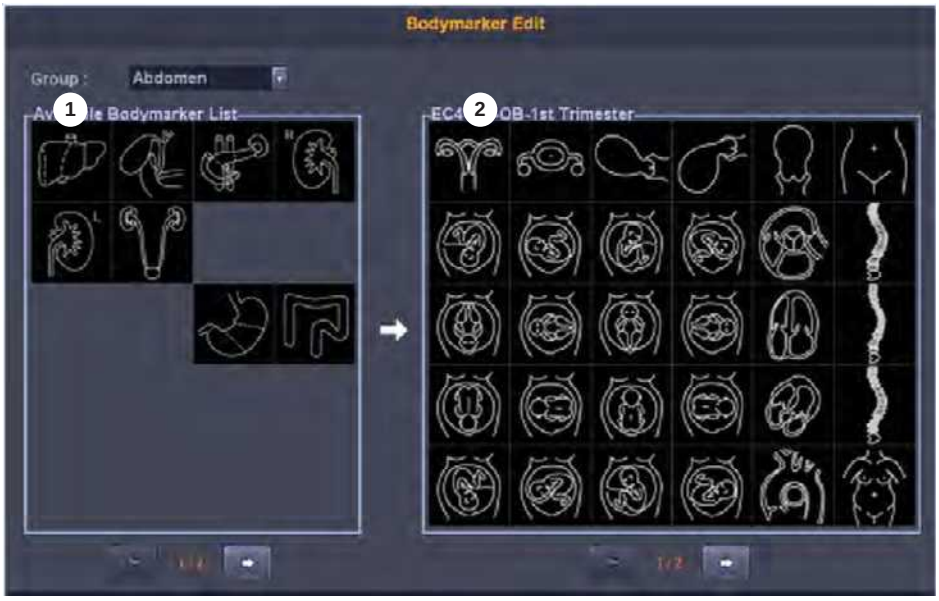

[Figure 7.6 BodyMarker Edit]

❶ BodyMarker list: The list varies depending on the group selected from **Group**. **Current page/ Total pages** is displayed below the list. If the total pages are two or more, you can move to other pages by using ⇨ or ⇦.

❷ BodyMarker list of probes or presets currently being used. **Current page/Total pages** is displayed below the list. If the total pages are two or more, you can move to other pages by using ⇨ or ⇦.

NOTE: You can add or save between 1 and 100 BodyMarkers in each list.

▶ Adding a BodyMarker

Select and double-click a BodyMarker in the list on the left (❶). The selected BodyMarker is added to the list on the right (❷). The right list cannot have duplicated BodyMarkers. If this occurs, a warning message will pop-up.

▶ Removing a BodyMarker

Select and double-click a BodyMarker in the list (❷) on the right.

▶ Saving and Canceling the BodyMarker list

Click **Save** to save the list. Click **Close** to cancel.

▶ Resetting the BodyMarker list

Click **Reset**. The BodyMarker list is reset to the system defaults.

Text Setup

Select whether to use Quick Text, Auto Text Erase, Boot up Caps Lock on, Auto Text, Edit Text, Auto Text Edit, or Clear Annotation.

Quick Text

If the checkbox is selected, the Quick Text function is enabled. Quick Text switches the system to the Text Input Mode immediately after a character key on the Alphanumeric Keyboard is pressed.

NOTE:

▶ The Quick Text checkbox is checked by system default.

▶ You can enter text even if you don't select Quick Text.
To switch to Text Mode, tap **Annotation** on the touch screen.

Auto Text Erase

If this checkbox is checked, whole sections of text can be deleted at once by pressing the **Freeze** button after inputting text.

Boot up Caps Lock On

If this checkbox is checked, Boot up Caps Lock On is turned on. This means that when text is entered, it is entered in capital letters.

Autotext

If an abbreviation is entered, the system retrieves and enters a full word automatically. When this option is selected, you can enter text more easily and quickly. For example, if you input "AC", the system will search for the full word and display it on the screen as "Abdominal Circumference".

To enable Auto Text, check the Auto Text checkbox by using the trackball. Otherwise, uncheck the checkbox.

If this option is selected, an abbreviation list appears on the screen when text is entered.

[Figure 7.7 Abbreviation list]

The system has a built-in abbreviation list for this function. You can add a new abbreviation or edit the existing abbreviations as desired.

Tips!

Editing the Abbreviation List

To enable the abbreviation list stored in the system, click the **Autotext Edit** button.
The system will switch to the *Auto Text Edit* screen.

To save the changes and finish editing, click the **Close** button.

▶ **Modify Word**

1. Use the trackball and the **Set** button to select a word to modify from the list. An abbreviation for the selected word and its full version are displayed under Abbreviation and Full Word at the bottom of the screen.
2. Modify words in the Abbreviation and Full Word fields. The abbreviation list is updated in real time.

▶ **Add Word**

1. Click the **New** button.
2. Enter words to add in the Abbreviation and Full Word fields at the bottom of the screen. The entered words are added to the abbreviation list.

▶ **Delete Word**

1. Use the trackball and the **Set** button to select a word to delete from the list. An abbreviation for the selected word and its full version are displayed under Abbreviation and Full Word at the bottom of the screen.
2. Click the **Delete** button. The following warning message will appear:
3. To delete the selected word, click **OK.** The selected word will be deleted from the abbreviation list. Click **Cancel** to cancel.

▶ **Specify Word Input Delays**

Specify the time taken by the system to automatically convert an abbreviation into a full word and display it on the screen. In the Auto Text Delay Time field at the bottom of the screen, enter the input delay time as a value from 0.1 – 5 seconds.

[Figure 7.8 Auto Text Editing]

■ Clear Annotation

Check this checkbox to delete the entered annotation when you change the mode.

Edit Text

Select an application to modify and edit the corresponding text page.

[Figure 7.9 Edit Text]

Peripherals

Select the Peripherals tab in the *Setup* screen. Or tap **Peripherals** on the touch screen. You can configure keys, buttons and the peripheral devices connected to the product.

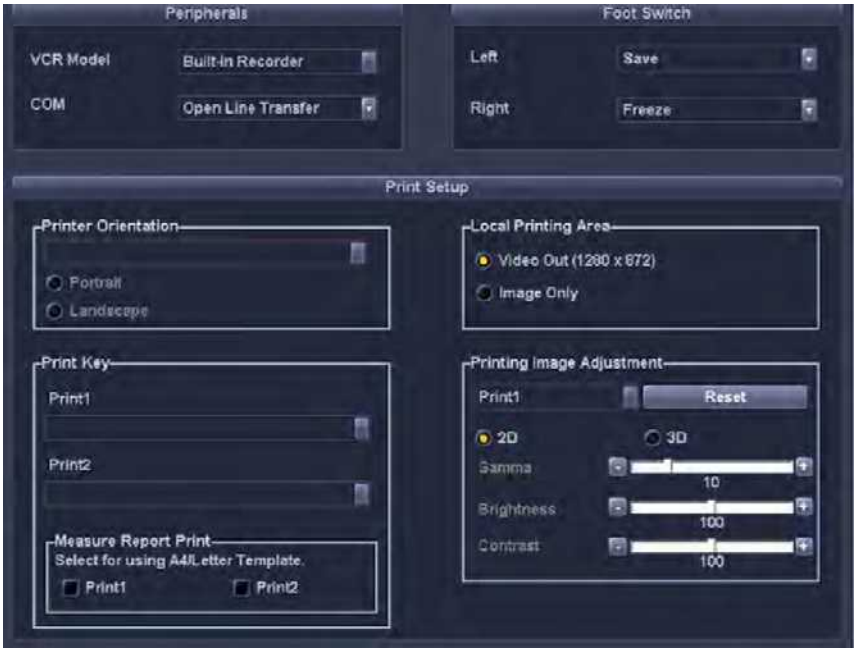

[Figure 7.10 Setup – Peripherals]

Peripherals

VCR Model

Set as Built-in Recorder. The user cannot change this setting.

COM

Configure a device to connect to a serial port. Choose between **Open Line Transfer** and **Reserved**. If you select **Reserve**, the **COM** port will not be used.

Select Open Line Transfer, connect the device, and reboot the system.

Foot Switch

Set the function of the left and right pedals of the foot switch. Configurable functions are: Freeze, Update, Record, Print, Save, Store Clip, and Volume Start, EZ-Exam.

Print Setup

Printer Orientation

NOTE: This option is available only for an Echo printer that uses roll paper.

Set the type and page orientation of the Echo printer.

- Printer Settings: Select the printer to use by using the combo button.
- Portrait: When printed, the long side of the page is vertical.
- Landscape: When printed, the long side of the page is horizontal.

Print Key

Set which type of printer to use when **Print 1** or **Print 2** button is pressed on the control panel.

Measure Report print

Select the checkbox to set the printer to use for printing the measurement report.

Local Printing Area

Set the area that will be printed.

- Video Out (1280 x 872): Print part of the monitor screen, containing the image area.
- Image Only: Print only the image area.

Printing Image Adjustment

Adjust the print quality of images. Select the image type and adjust Gamma, Brightness, and Contrast.

NOTE: This is only supported by some digital printers.

User Defined Keys

Select the User Defined Key tab on the *Setup* screen. Or tap User Defined Key on the touch screen. You can set the function of the keys and buttons on the product.

[Figure 7.11 Setup – User Defined key]

Set/Exit Key Setup

Set/Exit Key Switch

Set the functions of the buttons to the left and right of the trackball on the control panel.

- Set/Exit: The left button is set to **Set** and the right button is set to **Exit**.
- Exit/Set: The left button is set to **Exit** and the right button is set to **Set**.

Function Setup

Selects functions for **Zoom**, **Focus** and **Depth** dial-buttons on the control panel.

Zoom In

Selects the direction in which to rotate **Zoom** dial to zoom in on an image.

- Clockwise: Rotating the dial-button clockwise zooms in on an image.
- Counterclockwise: Rotating the dial-button counter-clockwise zooms in on an image.

Focus Up

Selects the direction in which to rotate **Focus** dial to adjust the focus depth.

- Clockwise: Rotate the dial-button clockwise to increase the focus depth.
- Counterclockwise: Rotate the dial-button counter-clockwise to increase the focus depth.

Depth Up

Selects the direction in which to rotate **Depth** dial to adjust the scanning depth.

- Clockwise: Rotate the dial-button clockwise to increase depth.
- Counterclockwise: Rotate the dial-button counter-clockwise to increase depth.

Save Key Setup

Save Key

- Image Save: Performs Image Save; does not perform Store Clip.
- Store Clip: Performs Store Clip; does not perform Image Save.
- Image Save/Store Clip: Saves the image in Freeze state; sets the Store Clip function in Live mode.

User Key Setup

User Key

Set the functions of the **User 1**, **User 2**, and **User 3** buttons on the control panel. The functions that can be set are shown below.

User 1	None, Gain, Frequency, Power, Angle, EZ Exam
User 2 / User 3	None, TDI Mode, TDW Mode, Store Clip, Save, Record, Print 2, M Line, Dual, Quad, Dual Live, Change Window, Probe Change, Application Change, Biopsy, Annotation, BodyMarker, Simultaneous, EFW Measure, EFW Result, BPD, HC, AC, FL, APTD, TTD, FTA, GS, CRL, Volume Save

ADVR Recording Method

Recording To

Select a media type for real-time recording. You may select either DVD or USB.

Zoom Box Setup

Zoom Box Reference Position

Select the position of the Zoom Box Reference. You may select either Image or Zoom Box.

Printer Key

Printer Key

- ▶ Print Only: Only prints the image.
- ▶ Print + Image Save: Prints and saves the image.

Indicator Select

Indicator Location Select

Selects which button to use for entering indicators. To enter indicators with the Pointer button on the control panel, select 'Control panel'.

Miscellaneous

Select the Miscellaneous tab on the *Setup* screen. Or tap **Miscellaneous** on the touch screen. You can set E-mail, Text, Network Status, etc.

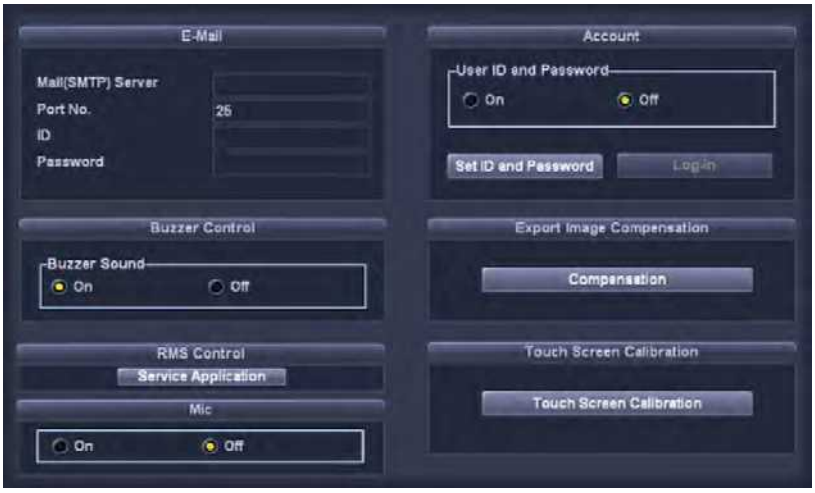

[Figure 7.12 Setup – Miscellaneous]

E-mail

You can specify a server through which you will send and receive e-mails.

Mail (SMTP) Server

Specify the e-mail server.

Port No.

Enter a port number.

ID

Enter an ID for the e-mail server.

Password

Enter a password for the e-mail server.

Buzzer Control

Generate a buzzer sound when a button or dial-button is used.

Buzzer Sound

Set this to **On** or **Off** using the trackball. When this is set to on, the buzzer sounds each time a button or dial-button is used.

RMS controller

Tips!

Service Application

This is the application for RMS; it is divided into Log, Service, Transfer, Diagnostics, and Utility tabs. When the application is first run, the user may only view the Log and Service tabs.

Log

The various logs generated by the equipment, pertaining to the frequency of use of the equipment, errors, system information, etc., may be viewed.

- DICOM: A separate log pertaining to DICOM is also kept; logs pertaining to DICOM transmission may not be viewed at present.
- Diagnostics: You may view the Error Log which is generated when performing a hardware diagnosis.
- Error: Information is provided on errors that have occurred in the equipment; you may select Error Image to view the circumstances in which the errors occurred.
- Utilization: Specific utilization information such as Application, Probe, and Preset may be viewed.

Service

Provides a Remote Desktop feature, which allows a remote connection to a Service Engineer. The user may click on a Service Engineer found on the screen to select that engineer. If the user cannot find a Service Engineer upon logging on, the user may press the **Refresh** button to refresh the screen and find a Service Engineer who has logged on.

Transfer

Shows how to remotely download the log data and other information saved on the device.

Diagnostics

- PC Status: Display the CPU usage, temperature, and other status information for the system.
- Self Diagnostics: Run diagnostics of the system hardware. This will be performed after shutting down the system.
- Check the system's test pattern.

Utility

This step is the preparation for starting the remote service; you may inspect, upgrade, or control the system from this tab.

- Control Panel: Press this button to go to the control panel.
- Virtual Key: Control the system and the touch panel by using this button.
- Upgrade: Provides a version upgrade function by using an RMS software file. Alternatively, provides a remote software upgrade function through theRMSserver.

Mic

Set this to **On** or **Off** using the trackball. MIC is set to "Off" by default.

Account

Register a user ID and password.

User ID and Password

Set the user account (log-in) function. If the account is registered and set to On (see Figure 7.12), it can be used for the following areas:

- ▶ Blank Image (Screen Saver).
- ▶ Accessing Patient Mode in SONOVIEW.
- ▶ Search window for Patient Mode in SONOVIEW.

Set ID and Password

This is the exclusive administrator function for approval and management of accounts. It enables you to activate the account list.

- ▶ Add: Fill out the User ID, Password, and Name fields. Then click the Add button to create a new ID.
- ▶ Modify: Save the changes.
- ▶ Delete: Delete the selected ID.
- ▶ Close: Close the settings.

Log-in

You can set the User Account ID after logging in to the Admin account. Please contact a service engineer for more information on the Admin account.

NOTE:

- ▶ The Admin account cannot be deleted.
- ▶ Once the user account function is activated, you cannot load other exams without logging in.
- ▶ The password must be 6 to 15 characters and composed of at least three of the following:
  - English alphabet upper case
  - English alphabet lower case
  - Numbers
  - Special characters

Export Image Compensation

Configure the post curve settings for the images for which DICOM services will be used. Tap the Compensation button (see Figure 7.12) to display the *Compensation* window.

Adjust **Gamma**, **Brightness**, and **Contrast** by using the slider for each option. Tap **Default** to revert to the system defaults.

Tips!

Compensation

Adjusting the post curve settings for images allows other monitors to display them as closely as possible to the original images, which is convenient in diagnosis.

[Figure 7.13 Image Compensation]

Touch Screen Calibration

Calibrate the touch screen.

Tips!

How to calibrate the touch screen

1. Click **Touch Screen Calibration**. The *Calibration* screen is shown on the touch screen.
2. Tap the blinking X symbol on the touch screen.
   – Tap it for three or four seconds until it stops blinking or you hear a 'beep' sound.
   – Tap 25 more symbols in the same way.
3. After calibrating, a screen where you can save the current coordinates is shown.

   CAUTION: Do not power off while the coordinates are being saved.

4. Reboot the system after the ***Save*** screen disappears.

Patient Name Formatting

This function is to display patient names in Asian languages, such as Korean, Chinese, and Japanese.

This setting is initialized when you click **Reset**.

NOTE: This button only appears on the screen in a product that supports Asian patient names.

Name Formatting

Set the order in which patient names are displayed.

- Default: Names are displayed in the order of last name, first name and middle name (E.g. Smith, Robert L.).
- Custom: For **Item**, specify the order of the last name, first name and middle name. For "Separator", specify a symbol, such as a comma, colon or a space, to separate each name.

Representation Priority

Patient Information

Specify how patient names are displayed. Select the precedence of Roman, Ideographic and Phonetic letters.

Options

Select the Options tab on the *Setup* screen. Or tap **Options** on the touch screen. You can enable or disable optional software and hardware.

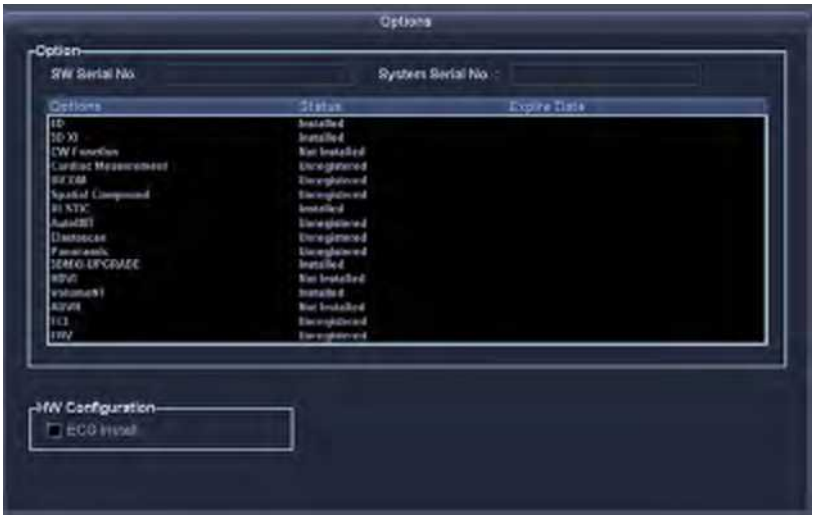

[Figure 7.14 Setup – Options]

* The option of your system may be different from that in the figure above.

Options

The list of optional software is displayed on the screen.

NOTE: To purchase optional software, please contact the software's distributor.

Options

This shows the types of optional software that can be installed on the product.

Statuses

This shows the current status of optional software.

- Lock_Not Installed: No hardware is connected.
- Lock_Unregistered: The software is not registered.
- Lock_Installed: Hardware is installed but not registered.
- Unlock_Permanent: Ready for use without any time limitation.
- Unlock_Restricted: Ready for use for a certain period.
- Lock_Expired: Use of the software is restricted and it cannot be used because a specified period of use has expired.

Hardware Configuration

The list of optional hardware is displayed on the screen. Currently, only ECG is supported.

Check the checkbox for hardware that will be used. Reboot the system to complete the settings.

DICOM Setup (Optional)

Select the DICOM tab on the *Setup* screen. Or tap **DICOM** on the touch screen. You can configure the DICOM (Digital Imaging and Communication in Medicine) operations and the DICOM server.

NOTE: For more information, please refer to the server's user manual, or the DICOM Conformance Statement.

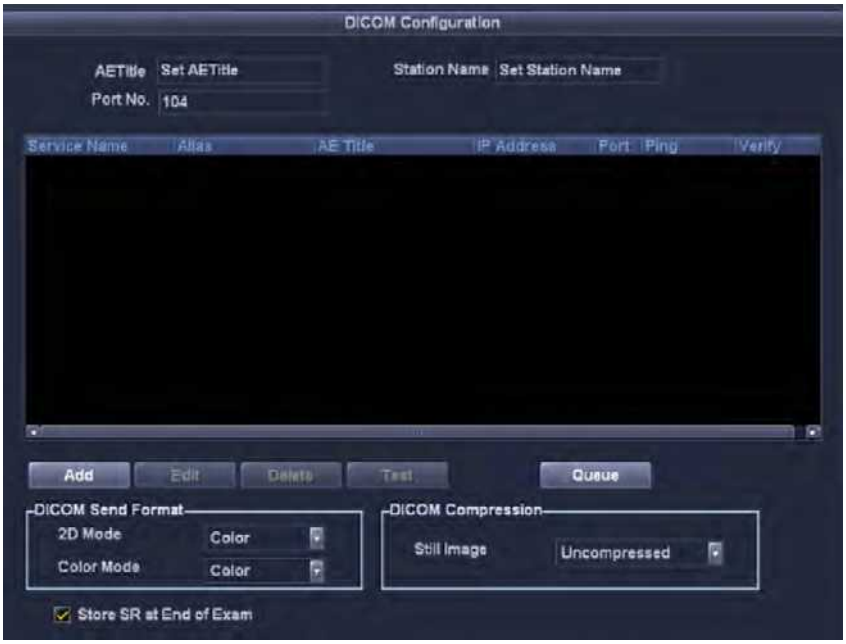

[Figure 7.15 Setup – DICOM]

DICOM Configuration

The information on the DICOM server currently used by the system is displayed.

You can change the information, or add or delete a server. The server information is used to identify DICOM for the system within a network. It is also used to transfer data between other DICOM servers.

NOTE: For IP Address, AE Title, and Port No. settings, contact your organization's network administrator.

■ AE Title

Enter the name of the DICOM AE (Application Entity). The title is used to identify devices that use DICOM within a network.

■ Station Name

Enter the name of the system. Along with AE Title, it is often used to identify the system in the DICOM network.

■ Port No.

Enter the port number of the server being used.

DICOM Send Format

Specify the storage format for the 2D or Color Mode images for which the DICOM services will be used. Select either Color or Gray by using the **Combo** button. If you select Gray, images are saved only in grayscale format.

NOTE: The DICOM Send Format settings are applied when an image is saved. For example, when set to Gray, an image is saved as a grayscale image.

DICOM Compression

Select whether to compress the still images for the DICOM service. Select Uncompressed or JPEG Baseline by using the **combo** button. When you select Uncompressed, the images are saved without compression.

NOTE:

The DICOM Compression setting is applied when the image is saved. That is, if JPEG Baseline is set, the image is compressed when it is saved.

Store SR at End of Exam

Select whether to store SR at the end of the exam. When you check this checkbox, SR is automatically stored at the end of the exam; otherwise it is not stored.

Adding DICOM Services

Click **Add** on the screen. A screen is displayed where you can enter a DICOM service to add. After adding a service, click **Save** to save the information. Click **Cancel** to cancel.

Services

Select the type of service to use via DICOM. The supported DICOM servers are Storage, Print, Worklist, PPS, SC and Storage SR.

Alias

Enter the name of the DICOM server.

AE Title

Enter the AE title of the DICOM server. Consult your network administrator before specifying this option.

Transfer Mode

Select a transfer method:

- Batch: Send all saved images when you press the **End Exam** button.
- Send As You Go: Send an image whenever you press the **Save** button to save it.
- Manual: Send the selected image in the Exam List or SONOVIEW.

Connection Timeout

The connection will time out if there is no response within the configured time period. You can specify this time period in seconds.

IP Address

Enter the IP address of the server being used. Consult your network administrator before specifying this option.

Port No.

Enter the port number of the server being used. Consult your network administrator before specifying this option.

Retry Interval

Specify how long the system will wait before it retries when transmission fails. You can specify it in seconds.

Maximum Retries

Specify how many times the system will retry when transmission fails.

Storage Server Information

Select STORAGE under **Services**. Configure the Image Storage Service using DICOM.

Storage Options

- Send Cine Loops: Check this checkbox to send Cine Loops.
- Include Pixel Spacing: In addition to the area information used in ultrasonography, the area information used in CT or radiography is included. You can perform measurements in the PACS system, which does not support ultrasonic area information.

NOTE: However, only 2D and 2D Color Mode images are supported. In Dual and Quad Mode, the depths of the included images must be identical.

- Include 3D Volume: Select whether to send 3D volume data together with the 3D images.

NOTE: Select this only when you use a storage service which supports the 3D volume data of Samsung Medison.

VOI LUT Setup

Configure VOI LUT (Value Of Interest, Look Up Table). When saving, you can adjust the brightness and contrast of a DICOM image. The saved image can be viewed with any PACS device that has DICOM VOI LUT implemented.

- Window Center: Enter a value for the DICOM Tag (0028, 1050) setting. The setting value indicates the brightness of an image that is displayed by the storage service. Relative to 128, a higher value results in a darker image. Note that this function can be used only when it is supported by the storage service.

▶ Window Width: Enter a value for the DICOM Tag (0028, 1051) setting. The setting value indicates the brightness of an image that is displayed by the storage service. Relative to 256, higher values result in lower contrast. Note that this function is available only when it is supported by the storage service.

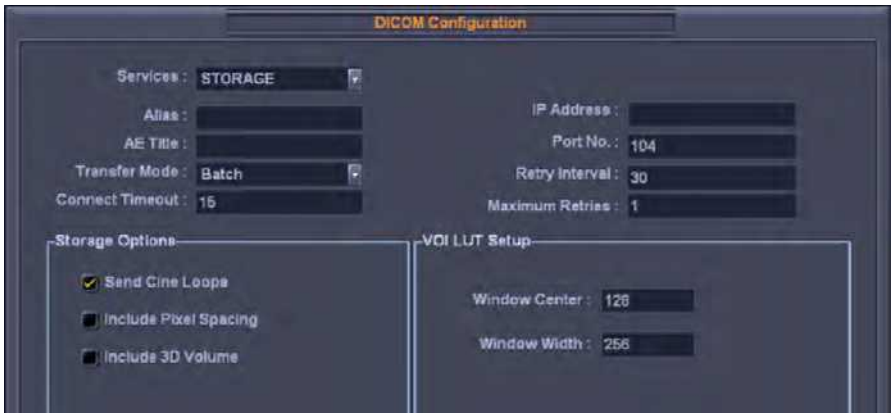

[Figure 7.16 DICOM Configuration – Storage]

Print Server Information

Select PRINT under **Services**. Configure the Print Service using DICOM.

NOTE:

▶ You can configure a printer connected to the DICOM network only.

▶ Depending on the printer, some of the following functions may not be available. Before configuring a printer, please refer to the printer's user manual, or the DICOM Conformance Statement.

■ Color

Specify whether to use colors. Select Grayscale or RGB.

■ Format

Specify the paper layout. Select from 1x1, 1x2, 2x2, 2x3, 3x3, 3x4, 3x5, 4x4, 4x5, and 4x6.

■ Orientation

Specify the paper orientation. Select Landscape or Portrait.

Magnification

When resizing an image to print, specify the interpolation. Select from Replicate, Bilinear, Cubic and None.

Border Density

Specify the border density of an image to print. Select Black or White.

Empty Density

Specify the background color of an image to print. Select Black or White.

Min. Density

Specify the minimum brightness of an image to print. If this option is not specified, the default value is applied.

Max. Density

Specify the maximum brightness of an image to print. If this option is not specified, the default value is applied.

Medium Type

Specify the material type for the print-out. Select from Paper, Clear Film, Blue Film, Mammo Clear Film and Mammo Blue Film.

Film Size

Specify the paper size. Select from 8 inch x 10 inch, 5 inch x 11 inch, 10 inch x 12 inch, 10 inch x 14 inch, 11 inch x 14 inch, 11 inch x 17 inch, 14 inch x 14 inch, 14 inch x 17 inch, 24cm x 24cm, 24cm x 30cm, A4 and A3.

Destination

Specify the paper pathway. Select Magazine or Processor.

Smoothing Type

This option is available only when Magnification is set to CUBIC. Enter a value for the printer which is specified in the DICOM Conformance Statement.

Priority

Specify a priority for the print command. Select from High, Med. and Low.

Copies

Enter the number of copies between 1 and 99.

Configuration Info.

Specify the unique value for a printer. Please refer to the DICOM Conformance Statement for the printer value.

[Figure 7.17 DICOM Configuration – Print]

Worklist Server Information

Select **WORKLIST** under Services. Configure the Modality Worklist Service using DICOM.

■ Show Worklist first when the *Patient Information* screen opens

When you check this checkbox, the Worklist window appears when you press the control panel's **Patient** button. Otherwise, the Study Information window appears.

■ Update Method

Specify the update method for Worklist.

▶ Only on User Request: Update only when asked by the user.

Tips!

To update a Worklist, in the Search tab on the *Patient Information* screen, select Worklist as the Search Source and **click Search**.

▶ On Startup and Every: Update automatically at a specified interval after the system boots and the Worklist is updated.

■ Scheduled Station AE Title

Specify the range of AE Titles to retrieve from the Worklist server in a hospital.

▶ Any: Retrieve the patient list stored in all AE Titles in the server.

▶ This System: Retrieve the patient list specified under the DICOM tab.

▶ Another: Retrieve the patient list stored in the AE Title specified by the user.

NOTE: This option is available only when the Worklist server is enabled.

■ Start Date

Specify the range of dates to search.

▶ Today: Retrieve the patient list for the current date.

▶ Range: Retrieve the patient list for 'n' days before and 'n' days after the current date.

▶ Past Week: Retrieve the patient list for 7 days before the current date.

▶ Past Month: Retrieve the patient list for a month before the current date.

▶ Custom Date: Specify a certain date and retrieve the patient list for that date.

■ Study Description Priority

Specify the sorting order for when an exam is retrieved from the Worklist server under **Patient Information** > **Patient** > **Description**. The list is sorted in order of high priority to low priority. Select an item that you wish to rearrange, and change its position by using the **Up** and **Dn** buttons.

■ Modality Type

This is used to specify the modality of exams retrieved from the worklist server.

▶ Any: Retrieves all registered worklist exams, regardless of modality.

▶ US: Retrieves Ultrasound exams only.

▶ Another: Allows the user to specify the modality and retrieve matching exams only. Leaving it blank means "Any".

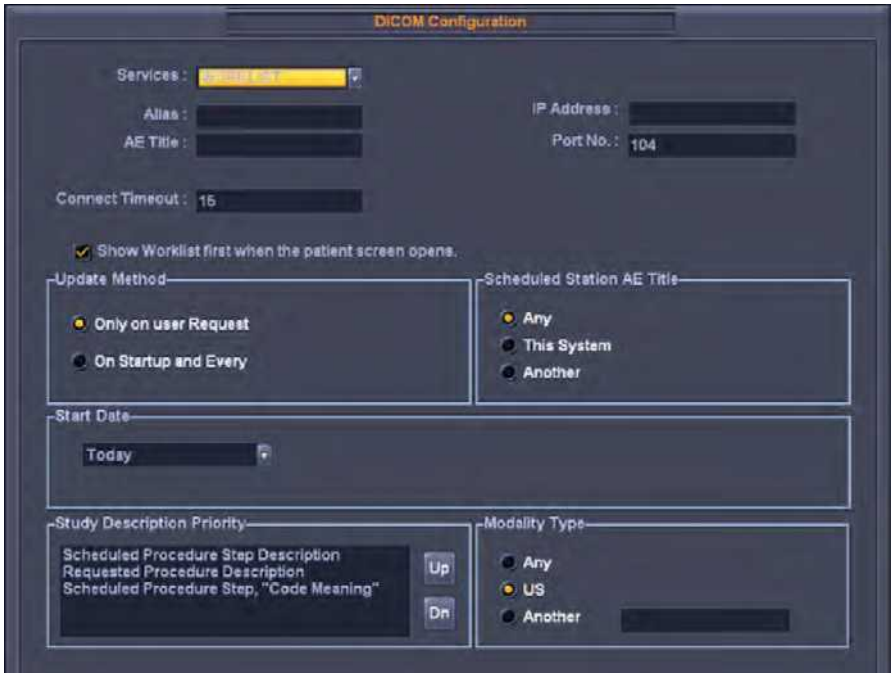

[Figure 7.18 DICOM Configuration – Worklist]

PPS Server Information

Select PPS (Performed Procedure Step) under **Services**. Configure the Modality Performed Procedure Step Service using DICOM.

This can be configured in the same way as for the Storage server.

[Figure 7.19 DICOM Configuration – PPS]

■ Always Complete Exams

When you check this checkbox, exams are always reported in complete condition. If you click the **Cancel** button without checking this checkbox, the cancel message is sent to the RIS server.

SC Server Information

Select SC (Storage Commitment) under **Services**. Configure the Storage Commitment Service using DICOM. The Storage Commitment Service is used after a diagnosis is finished and all saved images and reports are transferred.

■ Associated Storage Server

Select an Image Storage server to connect to.

[Figure 7.20 DICOM Configuration – SC]

Storage SR Server Information

Select Storage SR (Storage Structured Report) under **Services**. Configure the Report Storage Service using DICOM.

This can be configured in the same way as for the Storage server.

[Figure 7.21 DICOM Configuration – Storage SR]

Changing DICOM Information

Select a service and click **Edit** on the screen. The information on the selected service will appear.

After changing the information, click **Save** to save the changes. Click **Cancel** to cancel.

Deleting DICOM Services

Select a service and click **Delete** on the screen.

Testing DICOM Servers

Select a service and click **Test** on the screen. The connection with the selected service is tested and the results are shown under the Ping and Verify items. If the result is Normal, it indicates that the connection is functioning as it should do.

Managing DICOM

Click **Queue** on the screen to switch to the *DICOM Job Status* screen. You can review the current job status using the Job ID, Patient ID, etc.

The following describes the elements of the *DICOM Job Status* screen.

[Figure 7.22 Job Status]

❶ Job ID: Displays the job ID.

❷ Patient ID: Displays the patient ID.

❸ Alias: Displays the alias set in the *DICOM Configuration* screen.

❹ Type: Displays the job type. The available job types are Storage, Print, Storage SR, MPPS Start, MPPS End, and Storage CMT.

❺ Instances: Displays the number of instances. What this denotes differs depending on the job type. For 'Storage' and 'Print', it means the number of images. For 'Storage SR', it means the amount of measurement data. For MPPS Start, it is always displayed as 0.

❻ Date/Time: Displays the date and time when the job was created.

❼ Status: Displays the current status of the job.

Status	Description
Fail	The job failed.
Transfer	The job is in progress.
Imperfect	The job has been stopped during execution. It will be switched to the Ready state immediately.
Wait	The job is waiting for execution.
Wait Resp	The job is waiting for a response.
Hold	The job is waiting for a retry. This occurs when the job has failed but the maximum retry count is not yet reached.
Ready	The job is waiting for execution. This occurs when the network is not connected.
Not Ready	The Ready state is not complete. This occurs when MPPS (Modality Performed Procedure Step) End occurs before MPPS Start is completed. Or when a Storage or Print batch job has not completed.

■ Network Status

Displays the network connection status. When connected, "Connected" is displayed. When disconnected, "Disconnected" is displayed.

■ Number of Jobs

Displays the number of jobs listed in the *DICOM Job Status* screen.

■ Log

Displays the *DICOM Log* window.

■ Retry

Performs the selected job again. This button is enabled only when the status of the selected job is Fail or Wait Resp.

■ Retry All

Retries all jobs for which the status is Fail.

■ Delete

Deletes the selected job. This button is enabled only when the status of the selected job is Fail, Imperfect, Wait Resp., or Not Ready.

Clear

Deletes all jobs.

DICOM Log

Click **Log** on the *DICOM Job Status* window to display the *DICOM Log* window. This is used to manage the history of all DICOM services performed on this product.

Log Settings

Specify how log files will be managed.

- Delete Archived Log Afterwards: Specify how long a log file will be archived. Enter a number of days. If the specified time has elapsed after the log file was created, the file is deleted from the system.
- Log File Maximum Size: Specify the maximum size of a log file that can be archived. Enter a number of kilobytes. A log file that is larger than the specified size is not archived on the system and is deleted immediately.

DICOM Log

Displays a list of log files with their information.

- Select All: Selects all log files.
- Delete Selected Files: Deletes the selected log files.
- Copy Selected Files: Copies the selected log file to external storage media.
- View Selected File: Displays the details of the selected log file on the screen.
- Refresh: Updates the information of a log file.

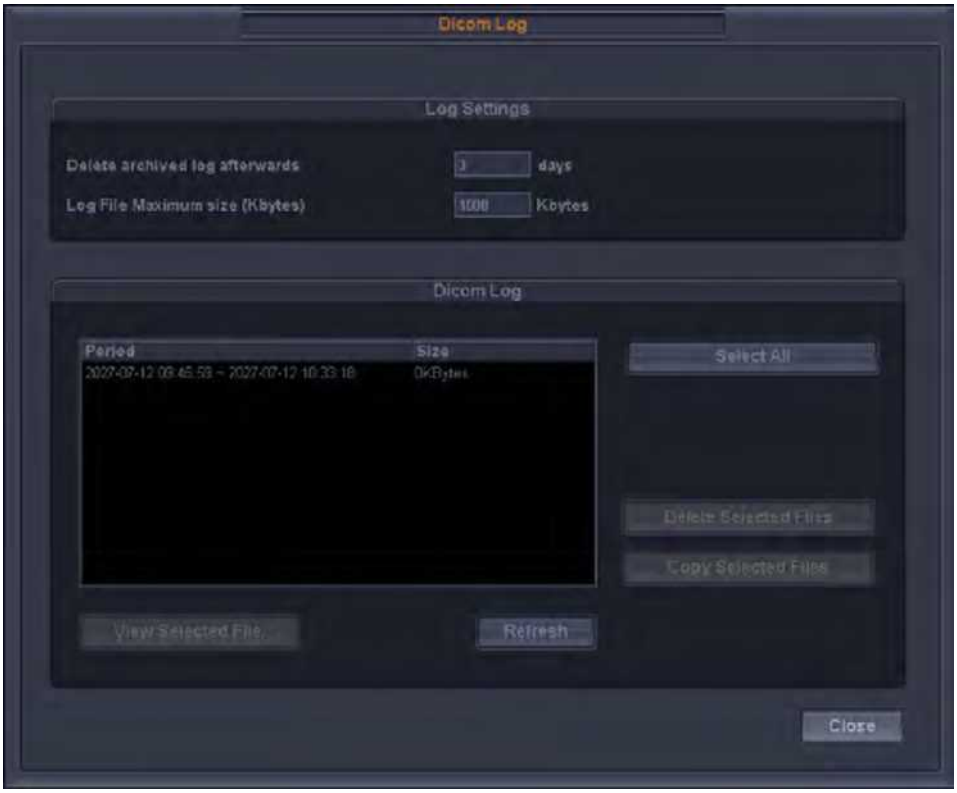

[Figure 7.23 DICOM Log]

Auto Calc.

Select the Auto Calc. tab on the *Setup* screen. Or tap **Auto Calc.** on the touch screen. The Auto Calc. function calculates specified measurement items automatically with measurement data and is supported in Spectral Doppler Mode.

NOTE: The specified items will appear on the screen only when the **Auto Calc.** button on the touch screen is tapped in Spectral Doppler Mode.

[Figure 7.24 Setup – Auto Calc.]

Auto Calc. Settings

Enable or disable the following items for automatic calculation by checking their checkbox. You can select up to six values.

When the Peak Systolic Velocity and End Diastolic Velocity values are 0, not all results for the items will be displayed on the screen. In addition, the result value for Time Averaged Mean Velocity is displayed only when Mean Trace is 'On'.

About

Select the About tab in the *Setup* screen. Or tap **About** on the touch screen. Information about the system software version will be displayed.

Click **Detail** to view more detailed information on the product version.

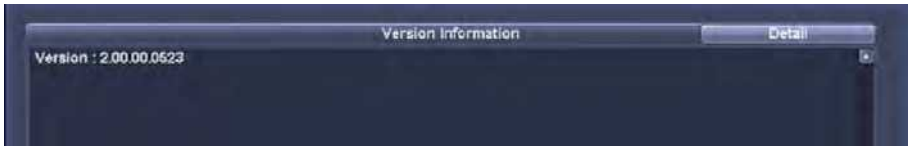

[Figure 7.25 Setup – Information]

* The S/W version of your system may be different from that in the figure above.

Measure Setup

Specify various setup options for measurements. The setup may be modified depending on specific needs or preferences.

1. Tap **Utility** > **Measure Setup** on the touch screen.
2. When the *Measure Setup* screen appears, select a tab that has items to configure.
3. Specify settings for each item.
4. Save and close the settings. Click the **Close** button on the monitor or tap the **Close** button on the touch screen or press the **Exit** button on the control panel to switch to Scan Mode. Tap **Return** on the touch screen to go back to the Utility menu.

Tips!

Selecting a tab

You can select a desired tab in either one of two ways. Select the method that suits you.

- ▶ Use the trackball and the **Set** button to select a tab.
- ▶ Tap a corresponding button on the touch screen.

[Figure 7.26 Measure Setup – Touch Screen]

Measure Menu

Tap Utility > Measure Menu on the touch screen. The monitor and the touch screen will switch to Measure Menu screen.

Set the buttons that will appear on the touch screen during measurement. The menus for measurement items and results can be configured as desired.

[Figure 7.27 Touch Menu Design]

Select Calc. Page

Select a calculation page (package) to set. You can also select by rotating the **[1] Page** dial-button on the touch screen. The calculation page consists of OB, Gynecology, Cardiac, Vascular, Fetal Heart, Urology, Abdomen, Small Parts, TCD, Pediatric Hip, and MSK.

Available Menu List

The possible measurement items appear as a menu on the touch screen. Tap "+" to display the sub-measurement items.

After selecting measurement items from the Available Menu list, and the desired position, tap ⇨ on the screen. The selected items are added to the menu on the right.

Touch Menu Design

Measurement Package Settings

- Prev. Page: Moves to the previous page.
- Next page: Moves to the next page.

Changing Menu Position

Select a measurement group or item, and change its position using ⇦, ⇨, ⇧, and ⇩.

New Tab

Creates a new tab.

Delete Menu

Deletes the selected measurement item.

Rename Tab

Changes the name of the created tab.

Clear All

Deletes all contents of the selected tab.

Save this Page

Saves the changes made to the current page.

Default Items

Tapping **Default Items** on the screen restores the default settings.

■ Return

Returns to the step that precedes the current menu.

■ Close

Finishes editing. When changes have been made, a message appears, asking whether to save them.

NOTE:

- ▶ You cannot place sub-measurement items in Group.
- ▶ For detailed information on measurement items, refer to 'Chapter 5. Measurements and Calculations'.

[Figure 7.28 Measure Menu –Touch Screen

General

Select the General tab on the *Measure Setup* screen. Or tap **General** on the touch screen. You can specify basic measurement options.

General Settings

Select the sub-tab General under the General tab. You can specify basic measurement options.

[Figure 7.29 Measure Setup – General – General]

Cursor & Method

Line Marker Type

Specify the shape of the caliper cursor displayed on the screen. Either Cross Hair or Arrow Head can be selected.

Circ. and Area Method

Specify the method for measuring circumference and area. Either Ellipse or Trace can be selected. By default, the selected method appears when the **Caliper** button is pressed. Therefore, you can start measurement more easily by specifying the most commonly used measurement method. For more information on Ellipse and Trace, please refer to the "Circumference and Area Measurement" section in 'Chapter 5. Measurements.'

Apply Auto Marker Cursor Size

Select whether to automatically reduce the marker cursor size when the distance between the start point and the moving point is 50 pixels or less at the time of measurement.

Cursor Customization

Guide

The size of the cursor the user is currently measuring with

Large

The size of the cursor the user has finished measuring with

Small

The size of the cursor among the markers the user has measured that are within 50px of the cursor on the screen

Shape

Cross Hair, X Type, L Type, V Type

Border

Cursor shadowing feature

Center Point

This feature displays a small dot at the center of the marker to help the user see the precise point of measurement.

[Figure 7.30 Cursor Customization]

Line Type

From the following three options, select the line pattern to use when measuring a distance.

Dotted Line

Displays a dotted line.

Hidden Dotted Line

Displays only the start and end points of the line.

Hidden Dotted Line after Set

Displays a dotted line while measuring, then after the line has been finalized with the **Set** button, the dotted line will disappear.

Selecting Line Type

If you select Hidden Dotted Line or Hidden Dotted Line after Set, you can keep images from being interfered with by a measurement line.

Start Point of Measurement

Set a location indicated by the cursor. Set a start point for measurement.

- ▶ End Point of the Last: The cursor appears at the end point of the last measurement.
- ▶ Start Point of the Last: The cursor appears at the start point of the last measurement.
- ▶ Center of the Region: The cursor appears in the center of the image region.

Display

Specify items to display during measurement. Check the checkboxes of the items you wish to use.

Show enlarged image box

- ▶ Doubles the size of an image and shows it during measurement and displays the current position.
- ▶ In Color Doppler mode, you can select between 2D mode image and Color Doppler mode image by pressing the space bar on the keyboard.

Guideline

- ▶ Displays the Doppler guideline: Specify whether to display cross lines while items are measured in frozen spectrum. This option can be useful when approximate values are estimated.
- ▶ Displays the M Mode guideline: Specify whether to display cross lines while items are measured in the frozen state in M Mode. This option can be useful when approximate values are estimated.

Clear Function on Unfreeze

- Clear Measured 2D Mode Results On Unfreeze: Specify whether to clear measurement results from the screen when switching to Scan Mode after performing measurements in 2D Mode.
- Clear Measured M/D Mode Results On Unfreeze: Specify whether to clear measurement results from the screen when switching to Scan Mode after performing measurements in M Mode and Doppler Mode.

Measurement Units

Specify the measurement units. For a small object, it is more convenient to use 'mm' for Dist. When blood flow is fast, it is better to use 'm/s' for Vel.

- Dist.: Select either a cm or mm scale for the unit of distance, area and volume.
- Vel.: Select either cm/s or m/s for the unit of velocity.

NOTE: Changing measurement units deletes all existing measurement data.

Measurement Results

- Transparent BK color: Sets a transparent background.
- Number of Results Displayed: Specify the number of lines for measurement results that are displayed on the screen. This is applied to the basic measurement results for all applications, except for obstetrics, cardiac, vascular, urology, and fetal heart.

NOTE: Use the Setting tab of each application to set the Number of Measure Results Displayed for obstetrics, cardiac, vascular, urology, and fetal heart.

Report

Select the Report tab under the General tab. Here you can set items related to the measurement report.

■ Use SonoReport

The format provided by SonoReport is used instead of the report format provided by Samsung Medison.

NOTE: You need a program supplied by SonoReport to use this function. For details, contact the Customer Support Department of Samsung Medison in your region.

[Figure 7.31 Measure Setup – General – Report]

Report Header

Specify header options for reports. You can specify multiple items which will appear in all measurement reports.

Hospital Info.

This is information about the hospitals in which the product is installed. You can select Hospital name, Diag. Physician, Ref. Physician, and Sonographer.

Patient Info.

This is information about the patient. You can select Patient ID, Name, Gender, Heart Rate, Birthday, Age, and BSA.

Other

This information concerns other comments. You can select Description and Accession #.

OB/FH Header Layout

Specify item(s) to display under the header of Obstetrics or Fetal Echo measurement reports. You can specify more than one item.

EFW	Pctl. (EFW)
GA (EFW)	SD (EFW)
Gravida	Aborta
Para	Ectopic

Measurement Results

Measurement Result Type

Specify how measurements listed in a report are calculated.

- Average: Shows the average of the last three measurement values.
- Last: Shows the last measurement value.
- Max: Shows the largest measurement value.
- Min: Shows the smallest measurement value.

Save Action

Range

- Current Page: Select current page only.
- All Pages: Select all pages.

Color

- Same as preview: Save the colors exactly as they are shown on the monitor.
- Black and White: Save in black and white.

Print Action

OB Trend Graph

- Only Current Page: Print current page only.
- All Pages(1x1): The selected graph is printed in a 1 x 1 format
- All Pages(3x2): The selected graph is printed in a 3 x 2 format.
- Screenshot: Capture the screen to print the graph.

Print

Enter additional information for the header, title and footer to display when printing measurements.

Data Transfer

Select the sub-tab Data Transfer under the General tab. Here you can set the data transfer method, etc.

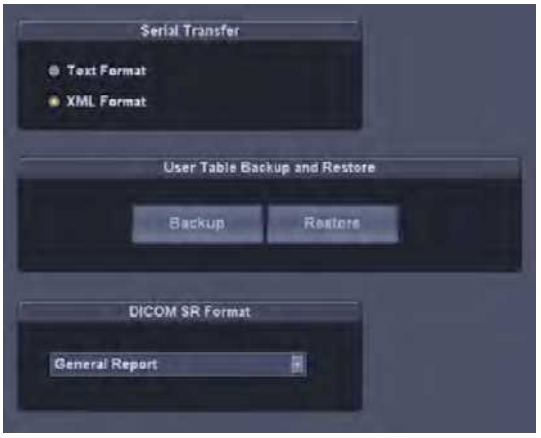

[Figure 7.32 Measure Setup – General – Data Transfer]

Serial Transfer

Specify the format in which data will be transferred. You can select from a text format and an XML format. This product uses an RS-232C USB serial cable to transfer data. Select the XML format to transfer data with reporting tools such as Astraia, Sonoultra and ViewPoint.

NOTE: Before setting, make sure that **COM** is set to Open Line Transfer under the Peripherals tab on the *Setup* screen.

User Table Backup & Restore

Back up a user-defined table or restore the backed-up table to the system. Click **Backup** or **Restore** and specify the desired options.

DICOM SR Format

- General Report: This is the default format.
- ViewPoint: This is the ViewPoint data format.

Caliper

Select the Caliper sub-tab under the General tab.

Specify whether additional information will be shown along with the basic measurement values, when basic measurements are taken by pressing the control panel's **Caliper** button. If this option is selected, the additional information will also be saved and output along with the measurement results.

If Application is set to Cardiac, the D Velocity, D A/B, D Trace and M Distance items are changed.

NOTE: The Cardiac setting can be used only when the probe preset is Cardiac or Pediatric Cardiology.

[Figure 7.33 Measure Setup – General – Caliper]

Obstetrics

Select the OB tab on the *Measure Setup* screen. Or tap **OB** on the touch screen. Here you can set items related to obstetrics measurement.

General Settings

Select the sub-tab General under the OB tab. You can specify basic options for obstetrics measurement.

[Figure 7.34 Measure Setup – OB – General]

Percentile Information

Show Percentile Information

Check the checkbox to see the Percentile Information.

Percentile Criteria

Select a value that will be used for percentile calculation.

- GA by LMP: GA is calculated based on the maternal LMP.
- Estab. Due Date: GA is calculated based on the Estab. Due Date that is entered in the Patient Information.
- AUA (Average US GA): GA is calculated using the average value of several ultrasound measurements.

Rank Information Method

Specify how the growth range information will be displayed. The growth range information can be used to observe fetal development and abnormality.

- Standard Deviation: International standard deviation is used to indicate the fetal development. Fetal development and abnormality are observed on the basis of SD = 0, which indicates the standard development.
- Pctl.: Fetal development is indicated in percentile. Fetal development and abnormality are observed on the basis of 50%, which indicates the standard development.
- Bar (Graph): The percentile is shown in a bar graph. This option is available with OB reports only. The green color indicates the normal development range, while the red color indicates an abnormal development range.

Fetal Weight Units

Specify the units for fetal weight measurement. You can select up to two units from grams [g], ounces [oz] and pounds [lb]. The primary and secondary units can be combined to show measurements in various units. The primary unit can be either "grams [g]" or "lb + oz" on the left. The secondary unit can be selected from the units on the right, and can be any unit other than the one selected as the primary unit.

'lb + oz' is a unit combining pounds and ounces, and 'None' indicates that no units are used.

Clear Function on UnFreeze

This function is applied to obstetrics only.

Clear Measure 2D Mode Result On UnFreeze

Check the checkbox to delete 2D Mode results when UnFreeze is selected after measurement.

Clear Measure M/D Mode Result On UnFreeze

Check the checkbox to delete M or D Mode results when UnFreeze is selected after measurement.

Number of Measure Results Displayed

Number of Results Displayed

Set the number of lines in which to display the measurement results on the screen.

OB Doppler Results

Set the display for each item of the Doppler Results to be shown on the screen of the OB package.

PSV : Disabled
EDV: Disabled
TAPV: Enabled
TAMV : Enabled
PGmax: Enabled
PGmean: Enabled
S/D : Enabled
D/S : Enabled
PI: Enabled
RI: Enabled

MVP Caliper

Select a caliper to measure the Maximum Vertical Pocket (MVP).

Distance

Measure the MVP by using the straight linear distance.

Circle

Measure the MVP by selecting Circle.

OB Measurement Result

Measurement Result Type

Set a measurement method. Select Avg., Last, Max. or Min. value.

EDD

Select the checkbox to display the estimated date of delivery.

Table Settings

Select the sub-tab Tables under the OB tab. You can specify references such as reference tables and equations that will be used by each measurement item.

[Figure 7.35 Measurement Setup – OB – Tables]

■ Items

This setting is intended for the measurement of the gestational age (GA) and the fetal size (Growth). Select items in the following order. Select items for the MCA (Mid Cerebral Artery), the PI of the UA (Umbilical Artery), and the AFI of the RI Graph settings by following the steps shown below.

1. Select a measurement item from the list on the left.
2. Select a reference type from the GA table and Growth table.
3. Select a reference from the list on the right.

Fetal Weight

This setting is intended for the measurement of the estimated fetal weight (EFW). Select items in the following order:

- ▶ Select the EFW measurement method from EFW equation and EFW growth.
- ▶ Select a reference from the list above (See right of Figure Measurement Setup-OB-Tables)

Add a Reference

NOTE:

Observe the following directions when adding a table reference. If these conditions are not met, a warning message appears and the reference is not saved.

- ▶ Input at least three types of data.
- ▶ If there are no Min and Max values, select Value Only for "Table Type."

1. Press . The *User Reference* window will appear.
2. Enter a name and description for a new reference.
3. Specify the reference type as Table or Equation.

NOTE: EFW Equation can only set Equation, and EFW Growth can only set Table as the reference type.

4. Click **OK** to go to the next step. The *Editor* screen will appear. Click **Cancel** to cancel.
5. Enter a reference.
6. Click **Save** to save the information. Click **Cancel** to cancel.
7. Click **OK** to finish. Click **Cancel** to cancel.

[Figure 7.36 User Reference]

Tips!

Add Reference Table

Clicking the **Question Mark** button shows the sources of the references. Clicking the question mark button a second time hides the sources again.

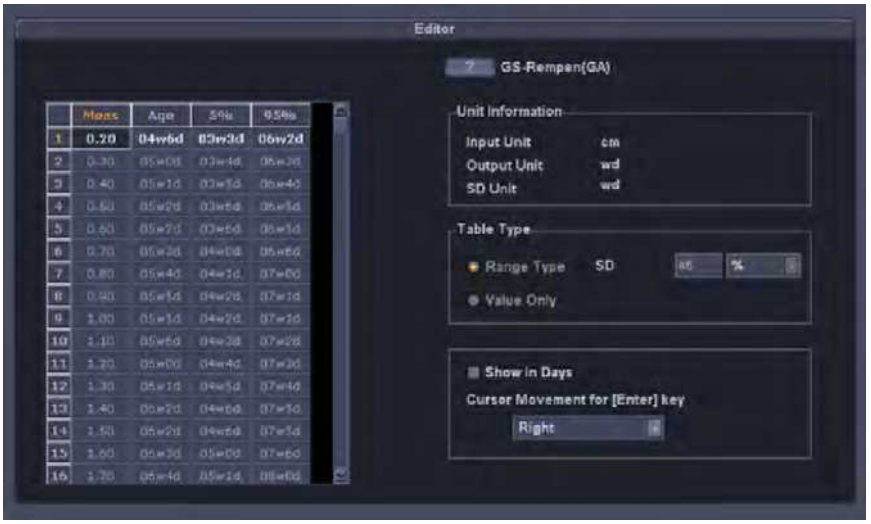

[Figure 7.37 User Table]

Unit Information

The unit of the selected reference, such as Input, Output, SD, etc., is displayed.

Table Type

Select the table type for the selected reference. For the Growth Table, SD (Standard Deviation) is displayed.

- Range Type: Set the Min. and Max. values of the selected reference and display them in a table. The SD value varies according to the range selected by the user.
- Value Type: Only the measurement values entered by the user are displayed, regardless of the range of Min., Max., and SD.

Misc.

- Show In Days: When the checkbox is selected, the table unit is changed from wd (week-day) to d (day).
- Cursor Movement for the Enter key: Specify the direction of cursor movement when the Enter key on the alphanumeric keyboard is pressed while a table is being edited. Select from Right, Down and Edit.

Tips!

Add Reference Equation

If a reference appears in an equation, the following should be entered:

Equation

Enter a reference equation. Use the measurement calculator shown in the lower right corner.

Input Value Ranges

Enter the minimum (Low) and maximum (High) ranges for the selected reference.

Tolerance Information

Select the tolerance from w or d.

[Figure 7.38 User Equation]

View & Modify References

1. Under Selection, select a preset to delete.
2. Press and the *Editor* screen will appear.
3. View or modify a reference.

■ EFW Sequential Measurement

NOTE:

- ▶ This setting is necessary when you set "EFW Measure" for User Key 1 or User Key 2 in **Utility** > **Setup** > **User Defined key** > **User Key Setup**. The setting is applied when you measure EFW using the **User 1** or **User 2** button.
- ▶ You can also set EFW measure in Touch Menu Designer. For details, see "Touch Menu Designer" in this chapter.

Specify the order of measurement items when measuring EFW using the **User 1** or **User 2** button. Change the order of the measurement items using the **arrow** buttons.

Calc. & Graph

Select the sub-tab Calc. & Graph under the OB tab. You can specify settings for calculation and graphs.

[Figure 7.39 Measure Setup – OB – Calc. & Graph]

Auto Calculations

Specify an item that will be calculated automatically. For example, if the MAD checkbox is selected as shown above, when APD and TAD are measured, the measurements are used to calculate MAD automatically and display the result on the screen. The results of automatic calculation may affect GA and EDD information.

Ratio Calculations

Specify a measurement item for which a ratio will be calculated. For example, if the FL/BPD checkbox is selected, when FL and BPD are measured, the ratio between them is calculated and displayed on the screen. This ratio also appears in a report.

Trend Graph

Specify whether to include a graph for a certain item or ratio in an obstetrics report. Press and the *Editor* screen for the selected graph will appear.

Cardiac

Select the Cardiac tab on the *Measure Setup* screen. Or tap **Cardiac** on the touch screen. You can specify settings for cardiac measurement.

[Figure 7.40 Measure Setup – Cardiac]

Cursor & Method

Circ. and Area method

Specify how the circumference and area are measured in a 2D cardiac image. Either Ellipse or Trace can be selected.

LV Volume Method

Specify how the volume of the left ventricle is measured. Teichholz, Cubed or Gibson can be selected. For more information on calculation formulae, please refer to the reference manual.

Cardiac Measurement Results

Measurement Result Type

Set a measurement method. Select Avg., Last, Max., or Min. value.

Number of Measure Results Displayed

Number of Results Displayed

Specify the number of lines for measurement results that are displayed on the screen.

Type of Derived Calc. Results Displayed

Set a display method for measurement results. Select **Brief** for a brief display and **Detailed** for a detailed display.

Vascular

Select the Vascular tab on the *Measure Setup* screen. Or tap **Vascular** on the touch screen. You can specify settings for vascular measurement.

[Figure 7.41 Measure Setup – Vascular]

A/B Ratio

Specify each individual peak velocity for which a ratio between A and B will be calculated.

ICA/CCA Ratio

Specify each individual measurement item that will be used for the ICA/CCA ratio.

Doppler Results

Set the Doppler measurement items that will be displayed with the measurement results.

Vascular Measurement Result

Measurement Result Type

Set a measurement method. Select Avg., Last, Max., or Min. value.

Number of Measure Results Displayed

Number of Results Displayed

Specify the number of lines for measurement results that are displayed on the screen.

Urology

Select the Urology tab on the *Measure Setup* screen. Or tap **Urology** on the touch screen. You can specify settings for urology measurement.

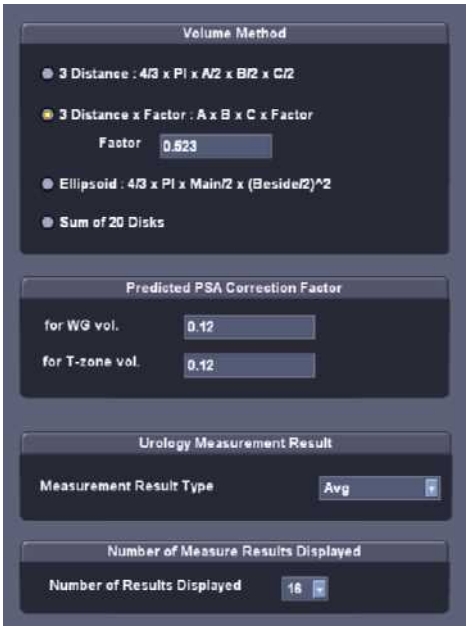

[Figure 7.42 Measure Setup – Urology]

Volume Method

Specify an equation that will be used for volume calculation.

- 3 Distances: The volume is calculated using three diameters in the longitudinal and transverse planes (4/3 x p x A/2 x B/2 x C/2).
- 3 Distances x Factor: The volume is calculated using three diameters in the longitudinal and transversal planes, and a factor (F) value entered by the user. (A x B x C x Factor).
- Ellipsoid: The volume is calculated using the length of the Main and Beside axes. (4/3 x π x Main/2 x $(Beside/2)^2$).
- Sum of 20 Disks: The volume is calculated by adding together the areas in the 20 parallel planes. (d/20 x (A1 + A2 + ... A20), d: the sum of the distances between disks).

NOTE: 3 Distances x Factor: A = 1st Dia. ; B = 2nd Dia. ; C = 3rd Dia.
The factor value is set to "0.523" by default. When the value needs to be changed, a value between 0 and 1 (0 < factor <= 1) is recommended.

Predicted PSA Correction Factor

Specify the predicted PSA correction factor for the measurement of the WG and T-Zone volume. The default value is 0.12.

Urology Measurement Results

Measurement Result Type

Set a measurement method. Select Avg., Last, Max., or Min. value.

Number of Measure Results Displayed

Number of Results Displayed

Set the number of lines in which to display the measurement results on the screen.

Fetal Heart

Select the Fetal Heart tab on the *Measurement Setup* screen. Or tap **Fetal Heart** on the touch screen. Here you can set items related to fetal heart measurement.

Cursor & Method

Circ. and Area Method

Specify how the circumference and area are measured in a 2D fetal cardiac image. Either Ellipse or Trace can be selected.

LV Volume Method

Specify how the volume of the left ventricle is measured. Teichholz, Cubed or Gibson can be selected. For more information on calculation formulae, please refer to the reference manual.

FH Measurement Results

Measurement Result Type

Set a measurement method. Select Avg., Last, Max., or Min. value.

Number of Measure Results Displayed

Number of Results Displayed

Specify the number of lines for measurement results that are displayed on the screen.

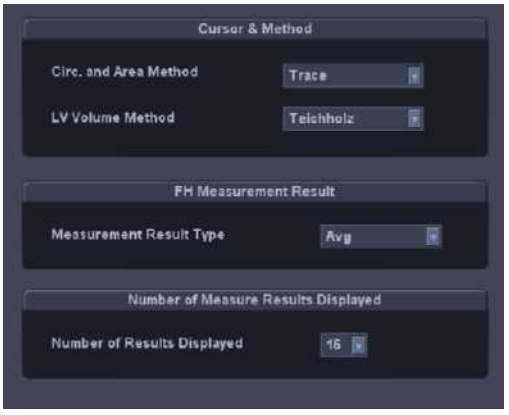

[Figure 7.43 Measure Setup – Fetal Heart]

Utility

This menu is for system settings and for using ECG, Biopsy, and Histogram.

You can use the Utility menu as follows:

1. Tap **Utility** on the touch screen. The *Utility* screen appears.
2. Tap a button to select the desired item.
3. Tap **Return** to return to the *Utility* screen after using it. To exit the *Utility* screen and switch to Scan Mode, tap **Exit** on the touch screen or press the **Exit** button on the control panel.

[Figure 7.44 Utility – Touch Screen]

Key Volume

Set the volume of the touch screen button. Make a selection between 0-100 using the dial-button on the touch screen. If the volume is set to 0, the button makes no sound when tapped.

Post Curve

Tap **Post Curve** on the touch screen. The *Post Curve* screen appears. Here you can set various post maps and gamma values.

[Figure 7.45 Post Curve – Touch Screen]

2D Post

Select a 2D Post.

[Figure 7.46 2D Post – Touch Screen]

Chroma Map

Tap **Chroma Map** on the touch screen and set to On or Off. When you select On, you can change the colors of images on the screen according to your choice.

Use dial-button **[1]** to select one from Type 1-13 or User 1-3. When you set Curve as the User type, the **Chroma Map Edit** button on the touch screen is enabled.

Chroma Map Edit

You can set the Chroma colors of your choice. You can also set the Chroma colors in each diagnosis mode menu. This is enabled only for the User type.

Adjust the color using Red, Green, and Blue. You can select a value between 0 and 255.

When you change the settings, **Chroma Map Save** is enabled. Tap **Chroma Map Save** to save the settings.

Chroma Map Save

Saves the settings changed in Chroma Map Edit.

Return

Returns to the previous step of the current menu, after the current Post Map setting has been completed.

Gamma

Use the dial-button on the touch screen to set brightness and contrast (Off, Weak, Medium, or Hard).

- ▶ Off: Gamma Off
- ▶ Weak: Bright contrast
- ▶ Medium: Medium contrast
- ▶ Hard: Dark contrast

Color Map

Select a Color Map.

Tag

Press the **Tag** button on the touch screen to turn it on/off. When turned on, a random color is applied to a certain area of an image.

Tag Width

Use the dial-button on the touch screen to select the range of tags, from between 8 and 256. The **Tag Width** affects the **Tag Pos.**.

Tag Pos.

Use the dial-button on the touch screen to select the position of tags, from between 0 and 248. The **Tag Pos.** affects the **Tag Width**.

Color Map

Use the dial-button on the touch screen to select the type of color map. 14 types of post curve are supported.

[Figure 7.47 Color Map – Touch Screen]

M Post

Select M Post. The settings can be specified in the same way as for 2D Post.

D Post

Select D Post. The editing method is identical to 2D Post.

Monitor Calibration

Tap Monitor Calibration.

[Figure 7.48 Monitor Calibration – Touch Screen]

Brightness

Set the brightness of the screen. Select a value between 0 and 100 by using the dial-button on the touch screen.

Contrast

Set the contrast of the screen. Select a value between 0 and 100 by using the dial-button on the touch screen.

Curve

Specify the focus curve. Select one from Type 1 to 5 or User 1 to 3 by using the dial-button. You can edit the user type focus curves according to your preferences by using **Edit**.

Edit

When you set Curve as User, the **Edit** button on the touch screen is enabled. Tapping **Edit** on the touch screen shows the screen and menu for setting a curve.

- **Insert**: Inserts a point to the curve. The new point is added in the middle, between the currently selected point and the next point.
- **Delete**: Deletes the currently selected point.
- **Save**: Saves the current curve.
- **Picker Pos.**: Selects a point in the curve. Select the position of the point using the dial-button.
- **Color**: Select your choice of Red, Green or Blue for the color of the point on the curve.

Default

Restores factory default settings.

ECG

Select the ECG. The ECG (echocardiogram) function allows viewing of the cardiac pulsation.

[Figure 7.49 ECG – Touch Screen]

NOTE: The ECG shows an image of the heart beat and appears in the menu for the Cardiac or Vascular application only.

In a Multi Image Mode such as Dual or Quad, ECG Cine can be used for each image.

Starting and Terminating ECG

Tap **ECG** on the touch screen.

ECG Setup

ECG Invert

Inverts ECG. Set this to On or Off by tapping the button on the touch screen.

Auto Gain

Tap **Auto Gain** on the touch screen to automatically set the gain value of ECG.

2D/Loop

Sets the area for using ECG. Select 2D or Loop by tapping the button on the touch screen. You can use ECG in the 2D area when you select 2D, or in the Loop area of Spectral Doppler Mode when you select Loop.

Sweep Speed

Sets the ECG speed. Select 60Hz, 120Hz, 180Hz, 240Hz, 300Hz, or 360Hz by using the dial-button on the touch screen.

Trigger

Sets the trigger interval. Turn it off or select a value from 1 – 5 by using the dial-button on the touch screen.

Trigger Time

Sets the time to initiate a trigger. Select a value from 0 – 1000 msec by using the dial-button on the touch screen.

Gain

Sets the ECG gain value. Select a value from 10 – 100 by using the dial-button on the touch screen.

Size

Sets the ECG size. Select a value from 50 – 200 by using the dial-button on the touch screen.

Position

Sets the ECG position. Select a value from 0 – 90 by using the dial-button on the touch screen. The ECG moves toward the top as the value increases.

CAUTION:

- If the ECG is less then 30Hz, the Heart Rate (HR) is not displayed.
- In CW Mode, when ECG is active, the error ratio of the Heart Rate (HR) should be within 2%.

Histogram

A histogram is a type of graph representing the distribution of echoes.

1. Tap **Histogram** on the touch screen. The touch screen displays a histogram.
2. Specify an area that the histogram is to cover. Use the trackball and the **Set** button to specify area 1, 2 and 3.
3. Histogram 1, 2 and 3 will appear on the screen.

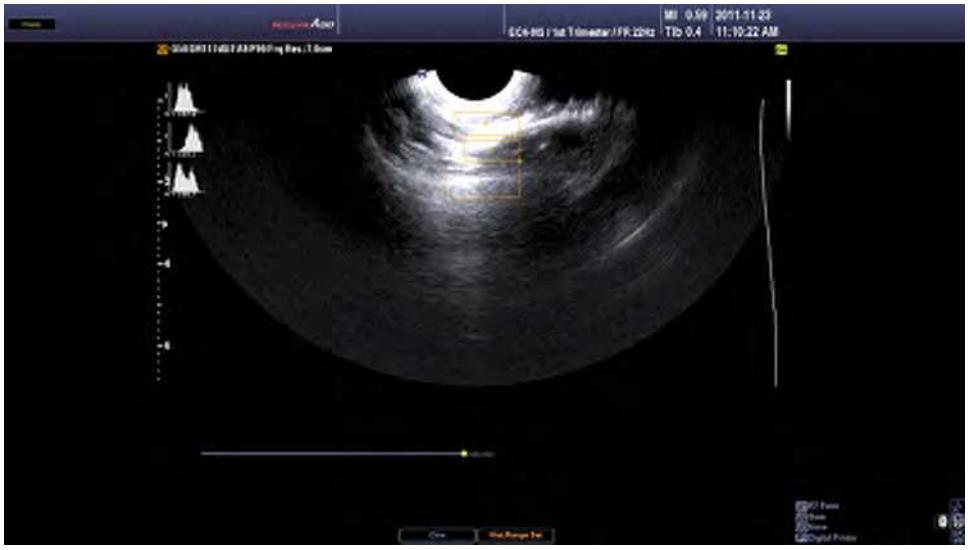

[Figure 7.50 Histogram]

Histogram Settings

Specify the position or type of a histogram.

Move Hist. 1, 2, 3

After selecting a histogram to move by pressing the button on the touch screen, move it by using the trackball and the **Set** button.

Rectangle, Ellipse

Set the histogram shape by pressing the **Rectangle** or **Ellipse** button on the touch screen.

[Figure 7.51 Histogram – Touch Screen]

Biopsy

Tap **Biopsy** on the touch screen.

NOTE: Before performing a biopsy, you should specify the Biopsy Guide Line.

[Figure 7.52 Biopsy]

Editing the Biopsy Guide Line

NOTE:

- Note that the Biopsy Guide Line cannot be edited when the Trapezoidal function is in use for the Linear Probe.
- If the system is rebooted, the Biopsy Guide Line settings are restored to the default.

1. Tap **Edit.**: A warning message appears.
2. Tap **OK**: The screen allowing you to set the guide line appears.
3. Set the Biopsy Guide Line by using the trackball and the **Set** button.
4. Tap **Save** on the touch screen to save the settings. A confirmation message appears.
   - Tap **Edit** to set the Biopsy Guide Line again.
5. Tap **OK** to apply the set Biopsy Guide Line. Tap **Cancel** to cancel saving.

Tips!

Support for Multiple Guide Lines

When you do a biopsy with a specific probe, the **User** button appears on the touch screen. This allows you to preset two or more Biopsy Guide Lines.

How to set the User Guide Line

1. Select the Biopsy Guide Line you want to set by using the **User** button on the touch screen.
2. Tap **Edit.** A warning message appears.
3. Tap **Save** on the touch screen to save the settings. A confirmation message appears.
   – Tap **Edit** to set the Biopsy Guide Line again.
4. Tap **OK** to apply the set Biopsy Guide Line. Tap **Cancel** to cancel saving.

Starting and Finishing a Biopsy

1. Tap the **Biopsy On/Off** button. A warning message will appear.
2. Tap **OK** and the Biopsy Guide Line will appear on the screen.
   - If the Biopsy Guide Line displayed is not correct, tap the **Edit** button to edit it.
   - When using a probe which supports multiple guide lines, you can tap the **User** button to choose a preset guideline.
3. Insert a needle along the Guide Line. And then perform the biopsy as desired.
4. When finished, press the **Biopsy On/Off** button again. The biopsy is complete.

[Figure 7.53 Biopsy – Touch Screen]

ADVR

Tab **ADVR** on the touch screen. The touch screen changes into the *ADVR* screen.

CAUTION: Check the capacity of the media before recording.

Record

Records images in DVD format.

Record

Press button ❶ to start recording preparations. Recording will automatically begin once ready. The time it takes to begin recording will vary depending on the type of the DVD used.

CAUTION: Please be careful not to remove a USB flash drive during recording because it may cause errors.

Record Stop

Press button ❷ to stop recording.

Close Session

Press button ❸ to close the current recording session. To play back recorded images, you must stop recording and press **Close Session** first.

Record Mode

Tap on the touch screen or use the dial-button to select Append or Overwrite.

- ▶ Append: Records in continuation of the current recording.
- ▶ Overwrite: Overwrites the current recording and starts a new recording.

Play

Play back recorded images.

Play:

Press button ❹ to start playback.

Pause

Press button ❺ to pause playback.

Stop

Press button ❻ to stop playback.

Rewind

Press button ❼ to rewind.

Fast Forward

Press button ❽ to fast forward.

Speed

Used to configure rewind and fast forward speed. Tap on the touch screen or use the dial-button to select from x4, x8.

Menu

Tap the **Menu** button on the touch screen to select a track.

Eject Tray

Tap on the touch screen button to eject the media tray.

Close Tray

Tap on the touch screen button to close the media tray.

Volume

Used to adjust the volume. Tap on the touch screen or use the dial-button and select a value between 0 and 100.

[Figure 7.54 ADVR – Touch Screen]

NOTE:

- For more information on the recommended media, refer to 'Peripheral Devices' in 'Chapter 2 Introduction'.
- The following media are only warranted: Mitsubishi+RW, Imation+RW, HP+RW, Melody+RW
- Recorded media cannot be backed up or exported via ADVR. Backed up or exported media cannot be also recorded via ADVR.
- In Setup > User Defined Key > ADVR Recording Method > Recording To, you may select the Media Type for real-time recording between DVD and USB.

Ez Exam Setup

Tap **Ez Exam Setup** on the touch screen. The *Ez Exam Setup* window is shown on the monitor and the touch screen.

Ez Exam Setup allows you to specify exam items and their order. This feature streamlines the diagnosis process.

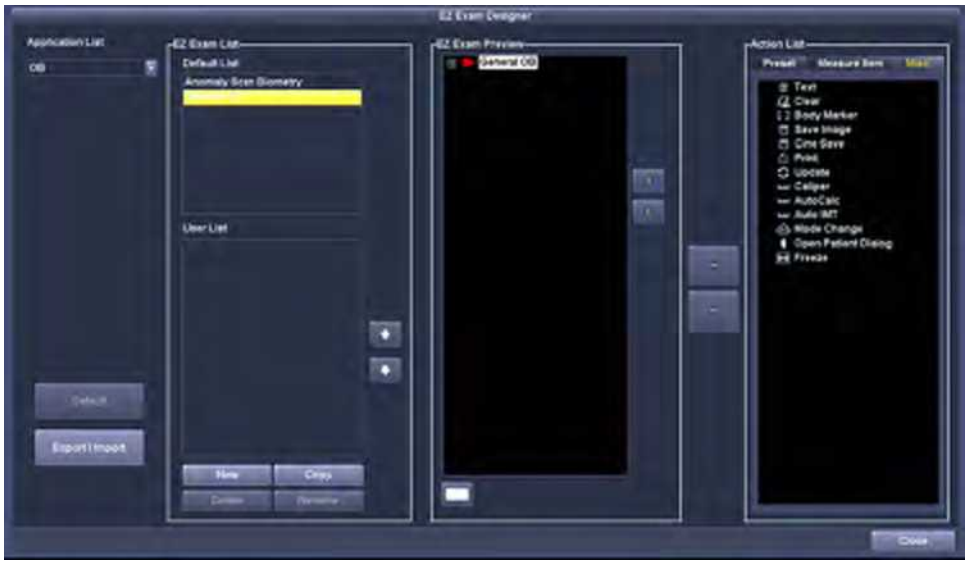

[Figure 7.55 Manual – Ez Exam Setup]

Application List

A list of available applications is shown. If previously configured EZ Exams are available, they will be shown in the EZ Exam List when an application is selected.

■ Default

Resets the selected application's exams. All exams contained in the EZ Exam List's User List are removed.

EZ Exam List

Displays the EZ Exam list.

Default List

Displays basic EZ Exams supported by The Product. Available only for Gynecology, Vascular, and Small Parts.

You cannot remove, rename, or add new EZ Exams, in the Default List.

User List

Displays a list of user-defined EZ Exams.

You can rename, remove, copy, and add new EZ Exams in the User List.

Add EZ Exam

Click **New** on the monitor or the touch screen. Once the *New Tab* window appears, enter a name and press **OK**. Press **Cancel** to cancel.

Copy EZ Exam

Select the EZ Exam you wish to copy and click **Copy** on the monitor or the touch screen. Once the *Copy Tab* window appears, enter a name and press **OK**. Press **Cancel** to cancel.

Rename EZ Exam

Select the EZ Exam you wish to rename and click **Rename** on the monitor or the touch screen. Once the *Copy Tab* window appears, enter a name and press **OK**. Press **Cancel** to cancel.

Delete EZ Exam

Select the EZ Exam you wish to delete and click **Delete** on the monitor or the touch screen. Once the *Warning* window appears, press **OK**. Press **Cancel** to cancel.

Reorder EZ Exam

Select the EZ Exam that you wish to reorder and then click or on the monitor.

EZ Exam Preview

Displays the selected EZ Exam's group and details. Groups associated with the EZ Exam are displayed as . To view the group's details, tap .

Add Group

Adds a new group. Click the monitor's button or tap the touch screen's **Add Group** button. Once the *New Group* window appears, enter a name and tap **OK**. Press **Cancel** to cancel.

NOTE: You can add groups to EZ Exams included in the User List only.

Edit Settings

This is used to change the properties of items selected in the Action List's Misc. tab.

- Text: Used to select the text that you wish to enter on the screen. Select Text and tap **Edit Settings** on the touch screen to display the *Text* window. Enter text and tap **OK**. Tap **Cancel** to **cancel**.
- BodyMarker: Used to set the BodyMarker on the screen. Select a BodyMarker and tap **Edit Settings** on the touch screen to load the *BodyMarker* window. Set the BodyMarker and tap **Exit**.
- Caliper: Used to set up the basic measurements to use. Select a caliper and tap **Edit Settings** on the touch screen to load the *Caliper Selection* window. Select the measurements you wish to use and tap **OK**. Press **Cancel** to cancel.
- Mode Change: Used to select the diagnosis mode to use. Select Mode Change and tap **Edit Settings** on the touch screen to display the *Mode Selection* window. Select the items you wish to use and tap **OK**. Tap **Cancel** to cancel.

Edit Name

This is used to change a group's name. Select a group and tap **Edit Name** on the touch screen. Once the *Edit MacroName* window appears, enter a name and press **OK**. Press **Cancel** to cancel.

Reorder

Select a group or item that you wish to reorder and then click or on the monitor.

Action List

This displays details that can be added to the selected EZ Exam. Select a tab and then the details. To view the sub-items, tap .

Add

Select an item from the Action List and tap . The selected item is added to the EZ Exam and shown in the EZ Exam Preview. Up to 40 items can be added to a single group.

Remove

Select an item from EZ Exam Preview and then tap . The selected item is removed from the EZ Exam.

[Figure 7.56 Ez Exam Setup – Touch Screen]

Export/Import

Share the EZ-Exam protocol saved on the system with another system, or import a protocol from another system.

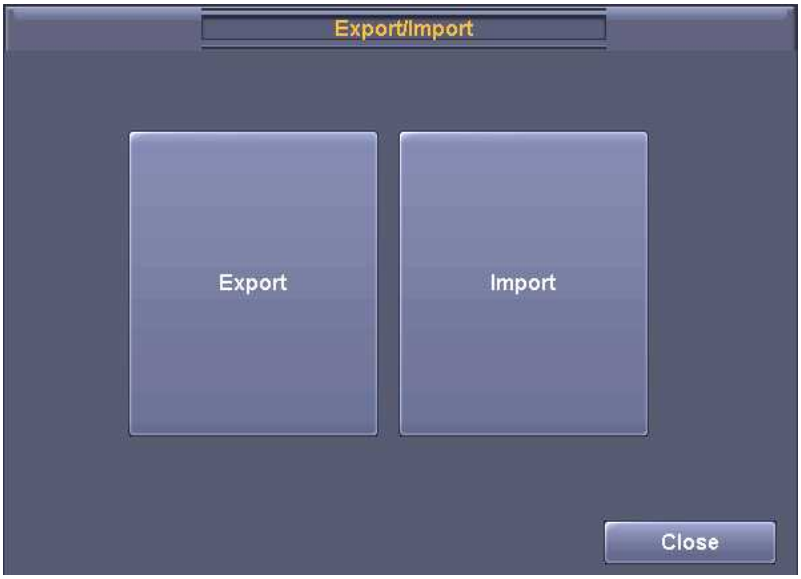

[Figure 7.57 Ez Exam Setup-Export/Import]

Export

1. Enter EZ-Exam Setup, select **Export / Import**, and press the **Export** button.
2. In the Drive window, select the drive for the USB device you want to export to.
3. Press the **Next** button, and the Export Complete message will be displayed.
4. Press the **Close** button to complete the setup.

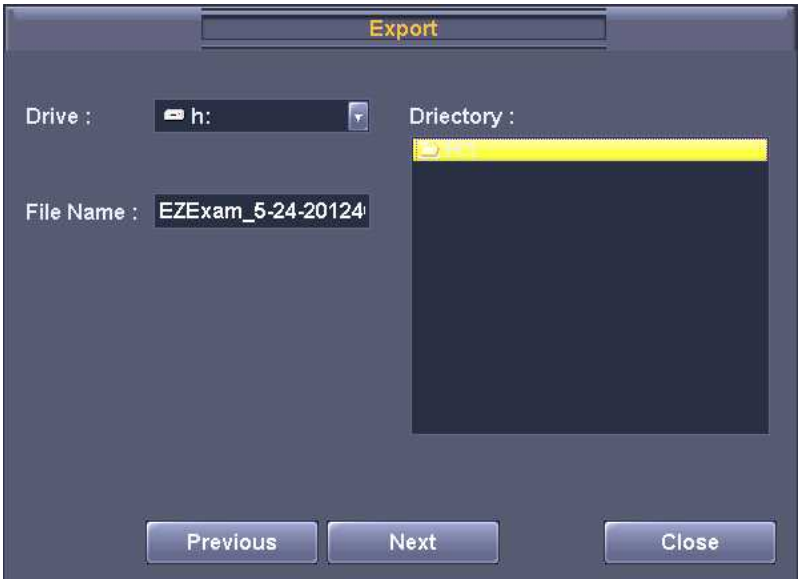

[Figure 7.58 Ez Exam Setup-Export/Import-Export]

Import

1. Enter EZ-Exam Setup, select **Export/Import**, and press the **Import** button.
2. In the Drive window, select the drive for the USB device you want to import from.
3. Press the **Next** button to move to the Category & Protocol selection screen. To cancel the import, press the **Cancel** button.
4. Place check marks next to the applications you want to import. To select an application's item, place a check mark on the relevant tab.
5. Press the **Close** button to complete the setup.

NOTE: When importing, up to five tabs may be included per each application of EZ-Exam. If more than five are included, only five will be imported; a warning message will be displayed, and the remaining tabs will not be processed.

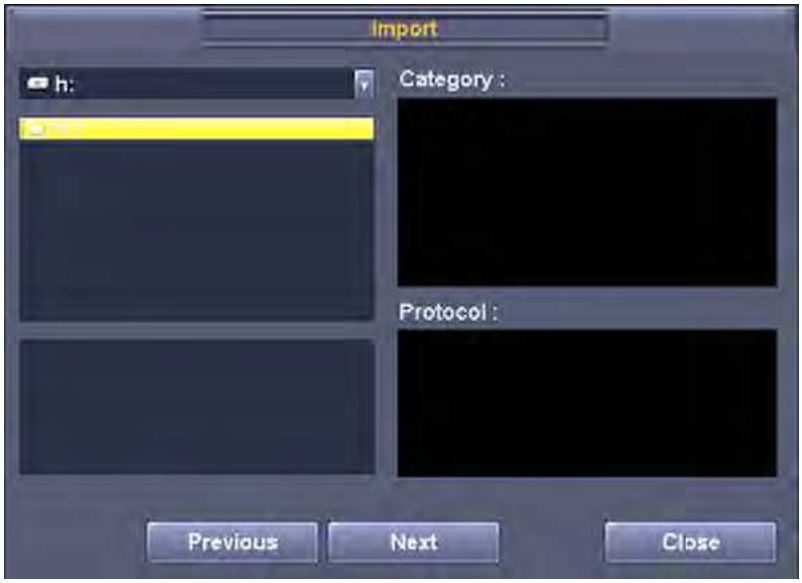

[Figure 7.59 Ez Exam Setup-Export/Import-Import]

Help

Tap **Help** on the touch screen. The electronic manual appears on the monitor screen.

Storage Manager

Tap **Storage Manager** on the touch screen. All disk drives mounted in the system will be shown. The drive type, available space, and total space for each drive are displayed.

Storage Manager is a program that lets you manage various storage devices connected to the system. You can remove, format or update a drive, if you check the checkbox in front of the drive's symbol.

NOTE: You may not remove, format or update a drive mounted within the system itself.

Tap **Exit** on the touch screen, or press the **Exit** button on the control panel, to exit Storage Manager.

■ Refresh

Updates the display on the touch screen to show the drives currently connected to the system.

NOTE: When using Storage Manager, you should tap **Refresh** to update the information.

■ Eject/Remove

Disconnects the selected drive.

NOTE: Before unplugging a USB Flash memory drive, make sure to disconnect it by using the **Eject/Remove** button.

■ Format

Initializes the selected drive. In the *Format* window, you can initialize various settings. Tap **Start** to start initialization. Tap **Close** to cancel.

NOTE: In the case of DVD+RW or DVD-RW, their free space might be displayed as 'O bytes' after formatting. This is a Windows™ error and,there is no problem with using those storage mediums.

Drive	Drive Type	Free Disk Size	Total Disk Size
C	FIXED DRIVE	12,220,198,912 Byte	21,533,749,248 Byte
D	FIXED DRIVE	17,602,322,432 Byte	21,476,171,776 Byte
E	FIXED DRIVE	46,289,735,680 Byte	53,694,595,072 Byte
F	FIXED DRIVE	402,864,177,152 Byte	403,400,597,504 Byte
G	CD/DVD DRIVE	Checking	Checking

Refresh Eject / Remove Format

[Figure 7.60 Storage Manager]

Power Management

Tap **Power Management** on the touch screen. The touch screen changes into the *Power Management* screen.

TI Display

Specify the TI to display on the screen as TIs (Soft tissue Thermal Index), TIb (Bone Thermal Index) or TIc (Cranial bone Thermal Index).

Save

Save the changes by tapping the corresponding button on the touch screen.

Power

Select ultrasound power between 10 – 100 by using the touch screen buttons or the dial button.

[Figure 7.61 Power Management]

Chapter 8

Maintenance

▣ ***Operating Environment*** ***8-3***

▣ ***System Maintenance*** ***8-4***

Cleaning and disinfecting 8-4

Cleaning Air Filters 8-6

Accuracy Check 8-7

▣ ***Data Maintenance*** ***8-8***

User Settings Backup 8-8

Patient Information Backup 8-8

Software 8-8

Operating Environment

When installing the console, please consider the following:

CAUTION: Placing the system near generators, X-ray machines or broadcast cables may result in screen noise and abnormal visual images. Sharing the power source with other electrical devices may also cause noise.

- Optimal conditions for the system are temperatures of 10 ~ 35°C and humidity of 30 ~ 75%.
- Avoid excess humidity.
- Avoid direct sunlight.
- Avoid places with extreme temperature variations.
- Avoid heat sources.
- Avoid dusty and unventilated areas.
- Avoid places where the system is likely to be exposed to vibration or impacts.
- Avoid places where the system is likely to be exposed to chemical substances or gases.

System Maintenance

Cleaning and disinfecting

Using inappropriate detergent or disinfectant may damage the product. Please read the following carefully.

WARNING:

- Turn off the system and disconnect the power cord from the wall outlet before cleaning and disinfecting, otherwise, there is a risk of electric shock or fire.
- Always use protective eyewear and gloves when cleaning and disinfecting the product.

Cleaning

CAUTION:

- Do not use a spray directly on the product exterior. It may cause cracks in the product or cause the color to deteriorate.
- Do not use chemical substances such as wax, benzene, alcohol, thinner, mosquito repellant, deodorant, lubricant or detergent.

Console

Use a soft cloth lightly dampened with a mild soap or detergent solution to clean the exterior surfaces of the system.

Cleaning Monitor

Wipe the LCD surface with a soft dry cloth. When the LCD panel has dirt on it, wipe it two to three times or more in one direction.

NOTE: For information on cleaning and disinfecting the probe, please refer to 'Chapter 9. Probes'.

Disinfecting

CAUTION: Use only recommended disinfectants on system surfaces.

A disinfectant qualified by the FDA 510(k) process is recommended. The following disinfectants are recommended because of both their biological effectiveness (as qualified through the FDA 510(k) process) and their chemical compatibility with Samsung Medison ultrasound products.

Solutions	Country	Type	Active ingredient	FDA 510(k)
Cidex	USA	Liquid	Gluteraldehyde	K934434
Cidex Plus	USA	Liquid	Gluteraldehyde	K923744

1. Turn off the system and disconnect the power cord from the wall outlet.
2. Mix the disinfectant solution that is compatible with your system to the solution strength specified on the instruction label.
3. Wipe the system surfaces with the disinfectant solution, following the disinfectant's instructions for wipe durations, solution strength, and disinfectant contact duration.
4. Air dry or towel dry with a sterile cloth according to the instructions on the disinfectant's label.

Cleaning Air Filters

The air filters minimize the intake of dust. Clean the air filter to ensure that a clogged filter does not cause the system to overheat and reduce the reliability and the system performance.

It is recommended that the air filters be cleaned once every three months.

CAUTION: Be sure to lock the brakes on the front wheels before cleaning the air filters to avoid injury by any unexpected movement of the product.

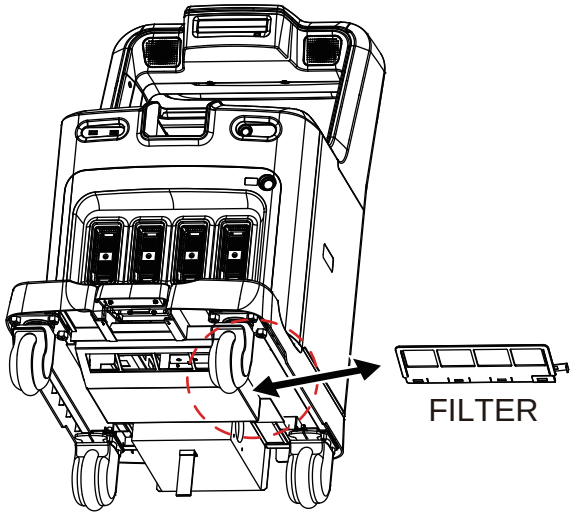

[Figure 8.1 Air filter cleaning]

1. Pull out the filter under the front of the console and take it away from the product.
2. Shake the filter to remove the dust and wash it in a mild, soapy solution.
3. Afterwards, dry the filter with a cloth, then air dry it in the shade.
4. Slide the filter back into the product.

NOTE: Allow the wet filter to dry thoroughly before reinstalling it. A wet filter can cause the system to malfunction.

Accuracy Check

NOTE: The user must ensure that safety inspections are performed every 2 years according to the requirements of safety standard EN 60601-1. Only trained persons are allowed to perform these safety inspections.

The product's maintenance status may affect the measurements obtained when using the product. The product should be maintained in an optimal state to ensure reliable measurements.

To ensure optimal operation of the product, perform an accuracy check every year. The equations and table related to measurement accuracy are included in "Chapter 5. Measurements" in this manual.

Data Maintenance

CAUTION: You may lose information files on user settings or patients, because of physical shocks to the product or internal errors. Therefore, you should back-up on a regular basis.

User Settings Backup

Always keep a backup copy of all information related to the user settings in case of data loss. Clients cannot back-up the user settings of the product. Please contact the servicing department to attain support for back-up.

Patient Information Backup

The SonoView program can be used for backing up patients' basic information and scanned images. The data is saved in the system by default, and the user can also choose to save the data to a specific location. If the system needs to be reinstalled because of product failure, etc., the Samsung Medison customer support staff will restore the basic information and scanned images that are saved in the system. For a more detailed description, see "Chapter 6. Image Management".

Software

The product software may be updated to enhance performance. You cannot modify the software on your own; a service representative will help you with any software modifications.

CAUTION: Minor software updates may be carried out without prior notice from the manufacturer.

If errors occur in the operating system (Windows™), or you desire to upgrade the operating system, please follow the instructions of the operating system manufacturer.

Chapter 9

Probes

▣ ***Probes*.....9-3**

Ultrasound Transmission Gel 9-11

Sheaths.....9-12

Probe Precautions 9-13

Cleaning and Disinfecting the Probe.....9-14

▣ ***Biopsy*..... 9-23**

Biopsy Kit Components.....9-23

Using the Biopsy Kit.....9-24

Cleaning and Disinfecting the Biopsy Kit.....9-26

Assembling the Biopsy Kit 9-28

Probes

The probe is a device that sends and receives ultrasound for acquiring image data. It is also called a Transducer or Scanhead.

The system limits patient contact temperature to 43°C, and acoustic output values to their respective U.S. FDA limits. A power protection fuse circuit protects against overcurrent conditions. If the power monitor protection circuit senses an overcurrent condition, then the drive current to the probe is shut off immediately, preventing overheating of the probe surfaces and limiting acoustic output.

Probe List

The ultrasound image scanner uses probes to obtain graphic data of the human body and then displays it on the screen. Always use application-specific probes in order to obtain the best quality images. It is also important to use a preset that is best suited to the particular organ being scanned.

Probe Application and Presets

The types of probes, applications, and presets available with this product are as follows:

Probe	Application	Presets
L4-7	Small Parts	Bowel, Breast, Testicle, Thyroid
	Vascular	Arterial, Carotid, Venous
	Abdomen	General
	MSK	General
L5-13IS	Small Parts	Bowel, Breast, Testicle, Thyroid
	Vascular	Arterial, Carotid, Venous
	MSK	Shoulder/Knee, Hand/Foot, Elbow/Wrist
L5-13/50	Small Parts	Bowel, Breast, Testicle, Thyroid
	Vascular	Arterial, Carotid, Venous
	MSK	Shoulder/Knee, Hand/Foot, Elbow/Wrist
L7-16IS	Small Parts	Breast, Testicle, Thyroid
	Vascular	Superficial, Carotid
	MSK	Shoulder/Knee, Hand/Foot, Elbow/Wrist

Probe	Application	Presets
LS6-15	MSK	General, Superficial
C1-4	Abdomen	Aorta, General, Renal
	OB	1st Trimester, 2nd Trimester, 3rd Trimester, Fetal Echo
	Gynecology	General, Adnexa
	Contrast	Perfusion
C2-6IC	Abdomen	Aorta, General, Renal
	OB	1st Trimester, 2nd Trimester, 3rd Trimester, Fetal Echo
	Gynecology	General, Adnexa
CF4-9	Pediatric	Abdomen, NeoHead
	Vascular	Carotid, Arterial, Venous
SC1-6	Abdomen	Aorta, General, Renal, Penetration
	OB	1st Trimester, 2nd Trimester, 3rd Trimester, Fetal Echo
	Gynecology	General, Adnexa
	Contrast	Perfusion
EC4-9IS	OB	1st Trimester
	Gynecology	General, Adnexa
	Urology	Prostate
VR5-9	OB	1st Trimester
	Gynecology	General, Adnexa
	Urology	Prostate
P2-4BA	Abdomen	Aorta, General, Renal
	Cardiac	Aortic Arch, Adult Echo, Ped Echo
	TCD	General
V2-6	Abdomen	Aorta, General, Renal
	OB	1st Trimester, 2nd Trimester, 3rd Trimester, Fetal Echo
	Gynecology	General, Adnexa
V4-8	Abdomen	Aorta, General, Renal
	OB	1st Trimester, 2nd Trimester, 3rd Trimester, Fetal Echo
	Gynecology	General, Adnexa

Probe	Application	Presets
V5-9	OB	1st Trimester
	Gynecology	General, Adnexa
	Urology	Prostate
CW2.0	Cardiac	Adult Echo
CW4.0	Cardiac	Adult Echo, Ped Echo
CW6.0	Cardiac	Ped Echo
	Vascular	Arterial, Venoous

NOTE:

- In addition to the optimized presets that come with the system, you create and use custom usersets.
- Refer to "Chapter 3. Starting Diagnosis" for how to set the probe and its preset.

Function list

The probe- and application-specific functions of this product are as follows:

Probe	Application	Har	PI	SCI	DMR+	Q Scan	ECG	Elasto Scan	Biopsy
L4-7	Small Parts	O	X	O	O	O	O	X	O
	Vascular	O	X	O	O	O	O	X	O
	Abdomen	O	X	O	O	O	O	X	O
	MSK	O	X	O	O	O	O	X	O
L5-13IS	Small Parts	O	X	O	O	O	O	X (Except Breast, Thyroid)	O
	Vascular	O	X	O	O	O	O	X	O
	MSK	O	X	O	O	O	O	X	O
L5-13/50	Small Parts	O	X	O	O	O	O	X (Except Breast, Thyroid)	O
	Vascular	O	X	O	O	O	O	X	
	MSK	O	X	O	O	O	O	X	

Probe	Application	Har	PI	SCI	DMR+	Q Scan	ECG	Elasto Scan	Biopsy
L7-16IS	Small Parts	O	X	O	O	O	O	X	O
	Vascular	O	X	O	O	O	O	X	O
	MSK	O	X	O	O	O	O	X	O
LS6-15	MSK	O	X	O	O	O	O	X	X
C1-4	Abdomen	O	O	X	O	O	X	X	O
	OB	O	O	X	O	O	X	X	O
	Gynecology	O	O	X	O	O	X	X	O
	Contrast	O	O	X	O	O	X	X	O
C2-6IC	Abdomen	O	O	X	O	O	X	X	O
	OB	O	O	X	O	O	X	X	O
	Gynecology	O	O	X	O	O	X	X	O
CF4-9	Pediatric	X	X	X	O	O	X	X	X
	Vascular	X	X	X	O	O	X	X	X
SC1-6	Abdomen	O	O	X	O	O	X	X	O
	OB	O	O	X	O	O	X	X	O
	Gynecology	O	O	X	O	O	X	X	O
	Contrast	O	O	X	O	O	X	X	O
EC4-9IS	OB	O	X	X	O	O	X	X	O
	Gynecology	O	X	X	O	O	X	O	O
	Urology	O	X	X	O	O	X	O	O
VR5-9	OB	O	X	X	O	O	X	X	O
	Gynecology	O	X	X	O	O	X	O	O
	Urology	O	X	X	O	O	X	O	O
P2-4BA	Abdomen	O	O	X	O	O	X	X	X
	Cardiac	O	O	X	O	O	O	X	X
	TCD	O	O	X	O	O	X	X	X
V2-6	Abdomen	O	O	X	O	O	X	X	O
	OB	O	O	X	O	O	X	X	O
	Gynecology	O	O	X	O	O	X	X	O

Probe	Application	Har	PI	SCI	DMR+	Q Scan	ECG	Elasto Scan	Biopsy
V4-8	Abdomen	O	O	X	O	O	X	X	O
	OB	O	O	X	O	O	X	X	O
	Gynecology	O	O	X	O	O	X	X	O
V5-9	OB	O	X	X	O	O	X	X	O
	Gynecology	O	X	X	O	O	X	X	O
	Urology	O	X	X	O	O	X	X	O
CW2.0	Cardiac	X	X	X	X	X	O	X	X
CW4.0	Cardiac	X	X	X	X	X	O	X	X
CW6.0	Cardiac	X	X	X	X	X	O	X	X
	Vascular	X	X	X	X	X	O	X	X

Probe	Application	CM	TDI	PD	DPDI	TDW	CW
L4-7	Small Parts	X	X	O	O	X	X
	Vascular	X	X	O	O	X	X
	Abdomen	X	X	O	O	X	X
	MSK	X	X	O	O	X	X
L5-13IS	Small Parts	X	X	O	O	X	X
	Vascular	X	X	O	O	X	X
	MSK	X	X	O	O	X	X
L5-13/50	Small Parts	X	X	O	O	X	X
	Vascular	X	X	O	O	X	X
	MSK	X	X	O	O	X	X
L7-16IS	Small Parts	X	X	O	O	X	X
	Vascular	X	X	O	O	X	X
	MSK	X	X	O	O	X	X
LS6-15	MSK	X	X	O	O	X	X
C1-4	Abdomen	X	X	O	O	X	X
	OB	X (Except Fetal Echo)	X	O (Except Fetal Echo)	O	X	X
	Gynecology	X	X	O	O	X	X
	Contrast	X	X	O	O	X	X
C2-6IC	Abdomen	X	X	O	O	X	X
	OB	X (Except Fetal Echo)	X	O (Except Fetal Echo)	O	X	X
	Gynecology	X	X	O	O	X	X
CF4-9	Pediatric	X	X	O	O	X	X
	Vascular	X	X	O	O	X	X
SC1-6	Abdomen	X	X	O	O	X	X
	OB	X (Except Fetal Echo)	X	X (Except Fetal Echo)	O	X	X
	Gynecology	X	X	O	O	X	X
	Contrast	X	X	O	O	X	X

Probe	Application	CM	TDI	PD	DPDI	TDW	CW
EC4-9IS	Gynecology	X	X	O	O	X	X
	Contrast	X	X	O	O	X	X
	Urology	X	X	O	O	X	X
VR5-9	OB	O	X	O	O	X	X
	Gynecology	X	X	O	O	X	X
	Urology	X	X	O	O	X	X
P2-4BA	Abdomen	X	X	O	O	X	O
	Cardiac	O	O	X	X	O	O
	TCD	X	X	O	O	X	O
V2-6	Abdomen	X	X	O	O	X	X
	OB	X (Except Fetal Echo)	X	O (Except Fetal Echo)	O	X	X
	Gynecology	X	X	O	O	X	X
V4-8	Abdomen	X	X	O	O	X	X
	OB	X (Except Fetal Echo)	X	O (Except Fetal Echo)	O	X	X
	Gynecology	X	X	O	O	X	X
V5-9	OB	O	X	O	O	X	X
	Gynecology	X	X	O	O	X	X
	Urology	X	X	O	O	X	X
CW2.0	Cardiac	X	X	X	X	X	O
CW4.0	Cardiac	X	X	X	X	X	O
CW6.0	Cardiac	X	X	X	X	X	O
	Vascular	X	X	X	X	X	O

NOTE: The symbols used in the table have the following meanings:

Har: Harmonic imaging
PI: Pulse Inversion
SCI: Spatial Compound Imaging
Q Scan: Quick Scan
ECG: Electro Cardio Graph Imaging
CM: Color M
TDI: Tissue Doppler
PD: Power Doppler
DPDI: Directional Power Doppler Imaging
TDW: Tissue Doppler Wave
CW: Continuous Wave

Thermal Index (TI) Tables

The TI values displayed on the screen title bar can change depending on the probes and applications. There are body organ (TIs), bone (TIb), and cranial bone thermal (TIc) indexes, depending on the body part. This product has been designed to automatically display the thermal index based on the probe and application being used. The TI values are as follows:

Probe	Application										
	Abdomen	Obstetrics	Gynecology	Cardiac	Vascular	Urology	MSK	Pediatric	Small Parts	Contrast Agent	TCD
L4-7	TIs				TIs		TIs		TIs		
L5-13IS					TIs		TIs		TIs		
L5-13/50					TIs		TIs		TIs		
L7-16IS					TIs		TIs		TIs		
LS6-15							TIs				
C1-4	TIs	TIb	TIs								TIs
C2-6IC	TIs	TIb	TIs								
CF4-9					TIs			TIs			
SC1-6	TIs	TIb	TIs							TIs	
EC4-9IS		TIb	TIs			TIs					
VR5-9		TIb	TIs			TIs					
P2-4BA	TIs			TIs							TIs
V2-6	TIs	TIb	TIs								
V4-8	TIs	TIb	TIs								
V5-9		TIb	TIs			TIs					
CW2.0				TIs							
CW4.0				TIs							
CW6.0				TIs	TIs						

Ultrasound Transmission Gel

Using an inappropriate ultrasound gel may damage the probe. For proper transmission of the acoustic beam, only use ultrasound transmission gel approved by Samsung Medison.

WARNING:

- Do not use mineral oil, oil-based solutions, or other unapproved materials, as they may cause damage to the probe.
- Do not use gels that contain any of the following agents:
  - Acetone
  - Methanol
  - Denatured Ethyl Alcohol
  - Mineral Oil
  - Iodine
  - Lanolin
  - Any lotions or gels containing perfume

Sheaths

Sheaths are recommended for clinical applications of an invasive nature, including intraoperative, transrectal, transvaginal, and biopsy procedures.

Samsung Medison does not supply sheaths, so you should purchase appropriate supplies from your regular supplier.

WARNING:

- Always keep sheaths in a sterile state.
- Sheaths are disposable. Do not reuse them.
- If sheaths are torn or soiled after use, clean and disinfect the probe.
- In neurosurgical applications, a disinfected probe must be used with sterile gel and a sterile pyrogen-free sheath.
- If the sterile sheath becomes compromised during neurosurgical applications involving a patient with Creutzfeldt-Jakob disease, the probe cannot be successfully sterilized by any disinfection method.
- Some sheaths contain natural rubber latex and talc, which can cause allergic reactions in some individuals. Please refer to the FDA Medical Alert released on March 29, 1991.

Installing the Sheath

1. Put on sterile gloves. Unpack the sheath and fill it with acoustic coupling gel.
2. Insert the probe into the sheath and pull the latex tip to cover the probe completely. If possible, cover the probe cable as well.
3. Ensure that there are no air bubbles within the ultrasound gel. If necessary, secure the sheath to the probe and the probe cable.
4. Dispose of the sheath after use.

Probe Precautions

CAUTION:

- Do not apply mechanical shocks to the probe.
- Do not place the probe cable on the floor where the cable can be run over by equipment wheels, etc. Do not apply excessive force to bend or pull the cable.
- Do not immerse the probe into any inappropriate substances such as alcohol, bleach, ammonium chloride, and hydrogen peroxide.
- Do not expose the probe to temperatures of 50°C or higher.

The probe can easily be damaged by improper use or by coming into contact with certain chemical substances. Always follow the instructions in the user manual to inspect the probe cable, case and lens before and after each use.

Check for cracks, broken parts, leaks and sharp edges. If there is any damage, immediately stop using the probe and contact Samsung Medison servicing department. Using damaged probes may result in electric shocks and other hazards to the patients and/or users.

Use and Infection Control of the Probe

WARNING: No neurosurgical treatments or examinations should be carried out on a patient with Creutzfeldt-Jakob disease (critical brain disease caused by virus). If the probe has been used on such a patient, it cannot be sterilized by any method whatsoever.

CAUTION: Sufficient washing and disinfecting must be carried out to prevent infection. This is the responsibility of the user who manages and maintains the disinfection procedures for the equipment. Always use legally approved detergents.

The ultrasonographic image scanner uses ultrasound, and it makes direct contact with the patient when in use. Depending on the types of examinations, such contact can be made to a wide variety of locations, including the ordinary skin or the location of blood transfusion during surgery.

The most effective method to prevent infection among patients is to use each probe only once. However, probes may need to be reused, as they are complex in design and expensive. Consequently, the safety instructions must be followed carefully in order to minimize the risk of infection among patients.

Electric Shocks

The probe uses electrical energy. If it touches conductive materials, there are risks of electric shocks to the patient or the user.

WARNING:

- Have the system regularly inspected by Samsung Medison technicians for electric leaks.
- Do not immerse the probe into liquid.
- Do not drop the probe or apply mechanical shocks.
- Inspect the housing, strain relief, lens and seal for damage, and check for any functional problem before and after each use.
- Do not apply excessive force to twist, pull or bend the probe cable.
- The power protection fuse protects the probe and the product from excess current. If the power monitoring protection circuit detects excess current, it immediately shuts off the current to the probe in order to prevent the probe surface from overheating and to restrict the ultrasound power output.
- The temperature of the product for making contact with patients is limited under 43°C. The ultrasound power output (AP&I) is in compliance with US FDA standards.

Cleaning and Disinfecting the Probe

WARNING:

- Always use protective eyewear and gloves when cleaning and disinfecting probes.
- Inspect the housing, strain relief, lens and seal for damage, and check for any functional problem after cleaning and disinfecting the probe.

Use of unsuitable cleaning or sterilizing agents can damage the probe.

Information of Detergent, Disinfectant, and Ultrasound Gel

Use an appropriate substance in accordance with the following tables. All probes are tested under IPX 7 Criteria.

Names	Disinfectants																
	T-Spray II	T-Spray	Sani-Cloth HB	Sani-Cloth Plus	Sani-Cloth Active	Septiwipes	Cleanisept Wipes	Ster-Bac Blu	Transeptic Spray	Incidin Foam	Super Sani-Cloth	Sani-Cloth Germicidal	Asepti-Wipes	Asepti-Wipes II	CaviWipes	MetriWipes	Cidex 2%
Type	S	S	W	W	W	W	W	L	S	S	W	W	W	W	W	W	L
Active Ingredient	Quaternary Ammonium (N-Alkyl)								IPA								NA
L4-7	◆	◆	◎					▣	▲								▣
L5-13IS		●							●		●						
L5-13/50	●		●														●
L7-16IS		●							●		●						
LS6-15		●	●														●
C1-4	◆	◆	◎					▣	▲								▣
C2-6IC	●	●	●														
CF4-9	◆	◆	◎					▣	▲								▣
SC1-6		●															●
EC4-9IS	●	●	●														
VR5-9	◆	◆	◎					▣	▲	■							▣
P2-4BA	●	●	●	●													●
V2-6	◆	◆	◎			▲	▲	▣									▣
V4-8	◆	◆	◎			▲	▲	▣									▣
V5-9	◆	◆	◎		▲	▲	▲	▣	▲	■		▲	▲			▲	▣
CW2.0	●	●	●														
CW4.0																	●
CW6.0	◆	◆	◎					▣	▲								▣

Names	Disinfectants															
	Cidex OPA [2,3]	Cidex Plus [2]	Metricide [2]	Omnicide(28)	Omnicide 14NS	Omnicide - FG2	Nuclean	Wavicide-01 [3]	Sekusept Extra	Salvanios pH 7	Salvanios pH10	Steranios 2%	Surfaces Hautes	Sekusept Plus	Milton	Bleach 5.25%
Type	L	L	L	L	L	L	L	L	L	L	L	L	S	L	L	L
Active Ingredient	Glutaraldehyde													Nonionic surfactant	Sodium Hypochlorite	
L4-7	▲	◇	▣					▣								
L5-13IS	●	●													●	
L5-13/50	●	●				●	●	●								
L7-16IS	●	●													●	
LS6-15	●	●				●	x	x							●	
C1-4	▲	◇	▣					▣								
C2-6IC	★	●	●	●				●	●						★	
CF4-9	▲	◇	▣					▣								
SC1-6	●	●													●	
EC4-9IS	★	●													●	
VR5-9	▲	◇	▣					▣								
P2-4BA	●	●	●	●	●			●			●	●			●	
V2-6	▲		▣					▣								
V4-8	▲		▣					▣								
V5-9	▲	◇	▣					▣						◎		
CW2.0	★	●						●							●	
CW4.0	●									●		●				
CW6.0	▲	◇	▣					▣								

Names	Disinfectants								Cleaner					
	Virkon	Sporox	Sporox II	Gigasept	Gigasept AF [3]	Gigasept FF	Hibitane	PeraSafe	Enzol	Alkazyme	Cidezyme	Klenzyme	Isopropyl alcohol(70%)	Isopropyl alcohol(80%)
Type	L	L	L	L	L	L	L	P			L	L	L	L
Active Ingredient	NA	Hydrogen Peroxide		Succindialdehyde, formaldehyde		Bersteinsaure	Chlorhexidine gluconate solution	Peracetic Acid	Dodecylphenolethoxylate, Sodium Xylene Sulfonate	NA	Proteolytic Enzymes		Alcohol	
L4-7					◎	◎	◎	▲						
L5-13IS	●		●											
L5-13/50											●	●	●	
L7-16IS	●		●											
LS6-15		●									●	●	●	
C1-4					◎	◎	◎	▲						
C2-6IC	x		x		x	★			●			●	x	
CF4-9					◎	◎	◎	▲						
SC1-6			●										●	
EC4-9IS	●		x		x	●	●		●			●	x	
VR5-9					◎	◎	◎	▲						
P2-4BA									●			●	●	
V2-6						◎		▲						
V4-8						◎		▲						
V5-9				◎	◎	◎		▲				◐		
CW2.0	●		x		x	●			●			●	x	
CW4.0										●		●		
CW6.0					◎	◎	◎	▲						

Names	Cleaner			Gel							
	Ethanol 75%	Metrizyme	McKesson	Natural Image	Aquasonics 100 [3]	GE Ultrasound Contact Gel	Clear Image	Kendall	Scan	Wavelength	Sonogel
Type	L	L	L	G	G	G	G	G	G	G	G
Active Ingredient	Alcohol	Propylene Glycol	PCMX (Chloroxylenol)	Ammonium Chlorides	NA						
L4-7					●				●		●
L5-13IS					●						
L5-13/50		●	●		●						
L7-16IS					●						
LS6-15		●	●		●						
C1-4					●				●		●
C2-6IC		●			●						
CF4-9					●				●		●
SC1-6		●			●				●		
EC4-9IS		●			●						
VR5-9					●						
P2-4BA		●			●						
V2-6					●	●			●		●
V4-8					●	●			●		●
V5-9					●	●			●		●
CW2.0		●			●						
CW4.0					●						
CW6.0					●				●		●

Tips!

Symbols

The symbols used in the table have the following meanings.

(1)	Compatible but no EPA Registration
(2)	FDA 510(k) qualified
(3)	Has CE mark
(4)	Discontinued
(5)	Under Development
S	Spray
W	Wipe
L	Liquid
P	Powder
G	Gel
x	Not compatible(DO NOT USE)
●	Compatible
★	Staining my occur on housing parts; however, the acustic performance and image quality are not affected.
■	Must not be used for longer than 5 minutes.
◐	Must not be used for longer than 10 minutes.
▲	Must not be used for longer than 15 minutes.
◆	Must not be used for longer than 20 minutes.
◇	Must not be used for longer than 25 minutes.
◎	Must not be used for longer than 30 minutes.
▣	Must not be used for longer than 50 minutes.
Blank	Untested (DO NOT USE)

The following table includes information about the manufacturers (or Distributors) of Detergents, Disinfectants, and Ultrasound Gels.

Product	Manufacturer or Distributor	Telephone number
Aquasonics	Parker Co.	+1-800-631-8888(USA)
Cidex	CIVCO Co.	+1-800-445-6741(USA) +1-319-656-4447(Worldwide)
Enzol	CIVCO Co.	+1-800-445-6741(USA) +1-319-656-4447(Worldwide)
GIgasept AF	S&M(Schulke&Mayr) Co.	+44-114-254-3500(UK)
Gigasept FF	S&M(Schulke&Mayr) Co.	+44-114-254-3500(UK)
Isopropyl alcohol (70%)	Local drugstore	None
Klenzyme	Steris Co.	+1-800-548-4873(USA)
Metricide	CIVCO Co.	+1-800-445-6741(USA) +1-319-656-4447(Worldwide)
Metrizyme	Metrex Research Corp.	+1-800-841-1428(USA)
Milton	Procter & Gamble Australia Pty. Ltd.	+61-1800-028-280(Australia)
Nuclean	National Diagnostics Co.	+1-800-526-3867(USA) +44(0)-148-264-6020(UK)
Omnicide	Cottrell Ltd.	+1-800-843-3343(USA)
Sani-cloth	PDI/Nice-Pak Products Co.	+1-914-365-1602(USA)
Sekusept Extra	Henkel Hygiene GmbH.	+49-0211-797-0(Germany)
Sporox II	Sultan Chemist Inc.	+1-800-637-8582(USA)
T-Spray	CIVCO Co.	+1-800-445-6741(USA) +1-319-656-4447(Worldwide)
Virkon	Antec International LTD.	+1-403-286-1771(USA)
Wavicide	Wave Energy System Inc.	+1-800-252-1125(USA)

Cleaning

Cleaning is an important procedure that is carried out before disinfecting the probe. The probe must be cleaned after each use.

CAUTION:

- Do not use a surgical brush when cleaning probes. Even the use of soft brushes can damage the probe.
- During cleaning and disinfection, keep the parts of the probe that must remain dry higher than the other parts, until all parts are dry.

1. Disconnect the probe from the system.
2. Remove any biopsy adapters or biopsy needle guides. (Biopsy adapters are re-usable and can be disinfected).
3. Discard sheaths. (Sheaths are single-use items).
4. Use a soft cloth lightly dampened with mild soap or compatible cleaning solution to remove any particulate matter and bodily fluids that remain on the probe or cable.
5. To remove remaining particulates, rinse with water up to the immersion point.
6. Wipe with a dry cloth.
7. If necessary, wipe first with a water-dampened cloth to remove soap residue, and then wipe again with a dry cloth.

Disinfection

A 10^{-6} reduction in pathogens should be reached following the disinfection procedures in this Manual and using the following Samsung Medison recommended solutions.

WARNING:

- If a pre-mixed solution is used, be sure to observe the solution expiration date.
- The type of tissue it will contact during use dictates the level of disinfection required for a device. Ensure that the solution strength and duration of contact are appropriate for disinfection.

CAUTION:

- Using a non-recommended disinfectant or not following the recommended disinfection method can damage and/or discolor the probe, and will void the probe warranty.
- Do not immerse probes for longer than one hour, unless they are sterilizable.
- Only sterilize probes by using liquid solutions. Avoid using autoclave, gas (EtO), or other non-Samsung Medison-approved methods.

1. Follow the instructions on the disinfectant label for storage, use and disposal of the disinfectant.
2. Mix the disinfectant compatible with your probe according to the instructions for solution strength provided on the disinfectant's label.
3. Immerse the probe into the disinfectant as shown in the illustration below.
4. Using the instructions provided on the disinfectant's label, rinse the probe after the immersion process is complete.
5. Air dry the probe, or towel it dry with a clean cloth.

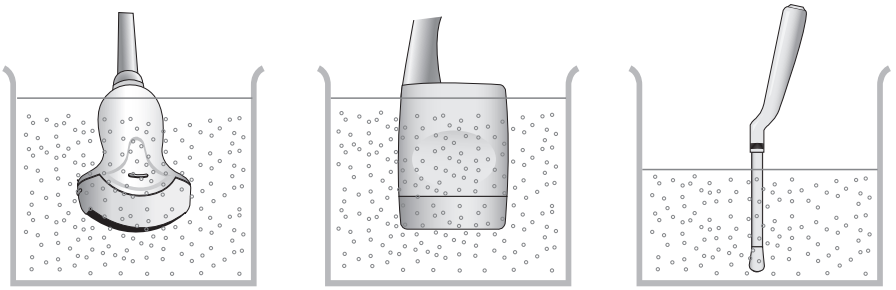

[Figure 9.1 Disinfection]

Biopsy

A biopsy is an examination method that surgically extracts tissue from the patient for examination. The probe and the biopsy kit are used together when conducting a biopsy with the ultrasonographic image scanner.

The ultrasound system shows the needle, which penetrates through the skin surface and veins, along with the examination location, minimizing the risk to the patient.

Biopsy Kit Components

The biopsy kit consists of the adapter, needle guide and needle. The components vary depending on the probe type. The components and accessories can be purchased from Samsung Medison.

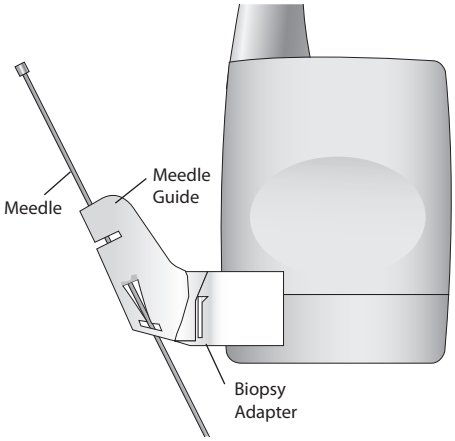

[Figure 9.2 Biopsy Kit Components]

- Adapter: Secures the needle guide to the probe tightly.
- Needle Guide: Guides the angle (direction) of the needle so that it can reach the examination location accurately. It also secures the needle so that the needle is not loose.
- Needle: This is the needle that is inserted into the patient's body.
- Sheath: Prevents the probe and adapter from getting soiled by any unwanted substances during the examination (blood and other bodily fluids).
- Ultrasound Gel: The space between the probe and the sheath is filled with the ultrasound gel to obtain images of the best quality.

Using the Biopsy Kit

WARNING:

- Verify the condition of the biopsy needle before use. Do not use a bent biopsy needle.
- The biopsy needle may bend during tissue penetration. The precise location of the needle must be checked by monitoring the echo generated from the needle.
- Never use the biopsy kit to biopsy prostate tissue.

Before Using Biopsy Kit

WARNING:

- Do not attempt to use the biopsy until you read the instructions for installing the sheath and verifying alignment of the needle guide.
- Always ensure that the probe and the needle guide are secured on both the left and the right.
- Do not use in IVF, CVS, or PUBS procedures.

Ultrasonographic scanning using the biopsy kit must be conducted by medical doctors or experienced medical staff with appropriate qualifications. Always, without fail, verify all safety procedures and disinfection.

Other brands may not properly fit Samsung Medison probes. Use only Samsung Medison-approved biopsy kits. Improper installation may result in patient discomfort.

Inspect all components. Ensure that the biopsy kit you are using is the correct one for the probe, the system, and system software.

Biopsy Procedure

The system generates a needle guideline through the displayed real-time ultrasound images to indicate the anticipated path of the needle. You can use this guideline to ensure that the needle or instrument is following the correct path.

1. Ready the patient according to the procedure appropriate for the examination objectives.
2. Install the sheath and the biopsy kit.
3. Set the system controls for the biopsy procedure. If necessary, apply acoustic gel to the patient.
4. Begin scanning the patient. Adjust the patient so that the location for examination fits into the needle guideline on the screen.

5. Install the needle into the needle guide for use. Perform the puncture by sliding the needle through the groove in the guide until the needle intercepts the target. To keep the needle securely in the needle guide, press down on the top of the biopsy adapter with your index finger.
6. When the examination location is reached, take the needle out of the needle guide.
7. Detach the needle guide, adapter and sheath from the probe.
8. Dispose of the components that are not designed for reuse.

Needle Guide Alignment

WARNING:

- The needle used for this alignment verification must not be used for the actual procedure. Always use a new, sterile needle for each biopsy procedure.
- To assist in accurate projection of the needle, use a straight, new needle for each alignment procedure.

Alignment of the needle guide displayed on the system is for the purpose of verifying whether the needle and the needle guide are properly installed. This must be done prior to the biopsy examination. Contact Samsung Medison servicing department for service.

Reverberation or other tissue artifacts may produce false needle images, which can cause confusion. Ensure that the needle path is along the guideline, and that you are not using a false needle image to locate the needle.

1. Attach the biopsy kit.
2. Set the system depth for the procedure to be performed and select the Biopsy menu.
3. Immerse the probe into the water bath, and insert the needle into the needle guide.
4. Confirm that the needle image is on the needle guidelines. If so, the needle guide is properly aligned.
5. If the needle image is out of the needle guideline, check the needle guide or the probe adapter.

Cleaning and Disinfecting the Biopsy Kit

WARNING: Always use protective eyewear and gloves when cleaning and disinfecting the biopsy kit.

Wash and disinfect the biopsy kit to reduce pathogens to the level of 10^{-6}. Some components of the biopsy kit may be disposable. Please read the biopsy kit user manual carefully before use.

Cleaning and disinfecting a stainless steel biopsy kit

Cleaning

1. After use, remove the biopsy kit from the probe.
2. Disassemble the biopsy kit into its component parts, if applicable.
3. Using a small brush and water, scrub each part to remove trapped material from the biopsy kit.
4. Rinse with water to remove remaining particulates.

Disinfection

1. Disinfect the adapter by autoclaving (Steam) or using gas (Ethylene Oxide).
2. After disinfection, follow the proper post-disinfection procedure for the disinfection method used. (Please refer to the disinfection user manual, etc.)
3. Inspect the components for damage such as cracks, rust or breakage. If damage is evident, discontinue use of the biopsy kit and contact Samsung Medison servicing department.

Cleaning and Disinfecting a plastic biopsy kit

Cleaning

1. After use, remove the biopsy kit from the probe.
2. Disassemble the biopsy kit into its component parts, if applicable. Discard the single-use parts. These parts cannot be disinfected.
3. Using a small brush and water, scrub each part to remove trapped material from the reusable components.
4. Rinse with water to remove remaining particulates.

Disinfection

CAUTION: Plastic biopsy kits can only be disinfected by using a chemically compatible cold-disinfectant. Disinfection by autoclaving or by using gas or radiation will cause damage to these parts.

Please refer to the user manual of the disinfectant for storage, use, and disposal of the disinfectant.

1. Check the disinfection duration (generally 10 hours) and temperature of the disinfectant.
2. After disinfection, follow the proper post-disinfection procedure for the disinfection method used.
3. Inspect the components for damage such as cracks, rust or breakage. If damage is evident, discontinue use of the biopsy kit and contact Samsung Medison servicing department.

Assembling the Biopsy Kit

C1-4 Biopsy guide

Biopsy Specifications

Model name	BP-KIT-044	
Component	Biopsy Adapter Needle Guide Clip	1 EA 1 EA 2 EA
Available Gauges	14G, 15G, 16G, 17G, 18G, 19G, 20G, 21G, 22G, 23G	

Installation

1. Mount the biopsy adapter onto the probe as shown below.

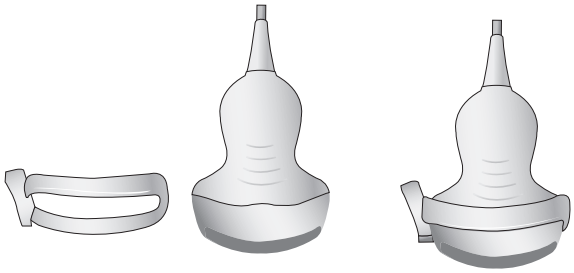

2. Insert gel into probe cover. And cover it.

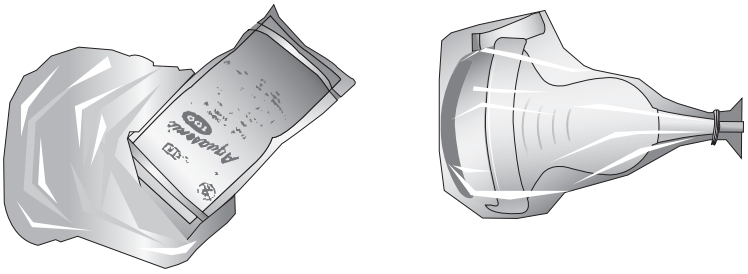

3. Install the needle guide onto the adapter.

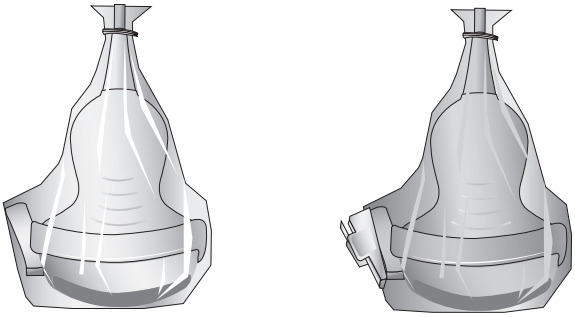

4. Installing the Needle Guide Clip.

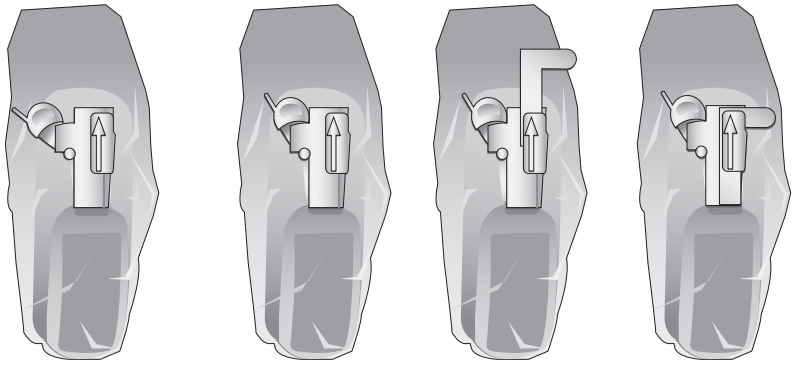

5. Install the needle into the needle guide.

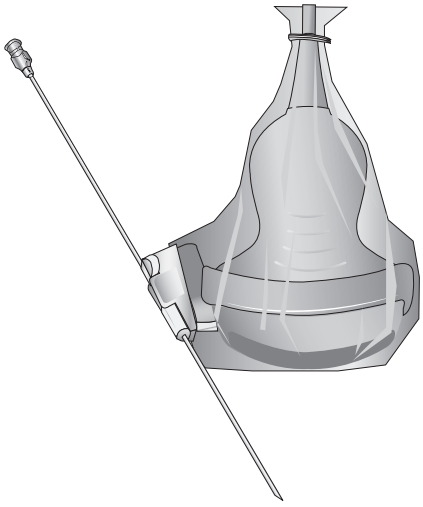

C2-6IC Biopsy guide

Biopsy Specifications

Model name	BP-KIT-009	
Component	Biopsy Adapter Needle Guide Clip	1 EA 1 EA 2 EA
Available Gauges	14G, 15G, 16G, 17G, 18G, 19G, 20G, 21G, 22G, 23G	

Installation

1. Mount the biopsy adapter onto the probe as shown below.

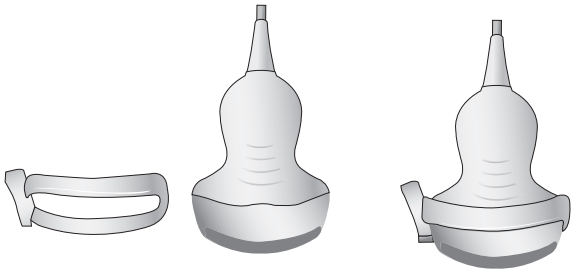

2. Insert gel into probe cover. And cover it.

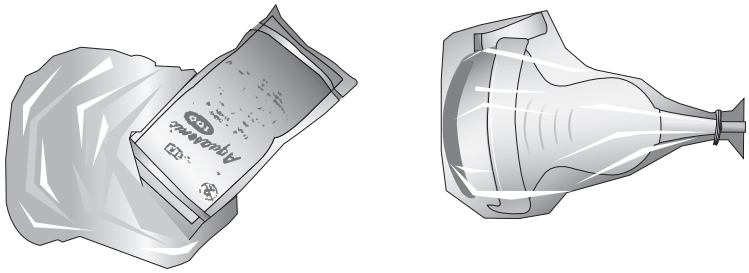

3. Install the needle guide onto the adapter.

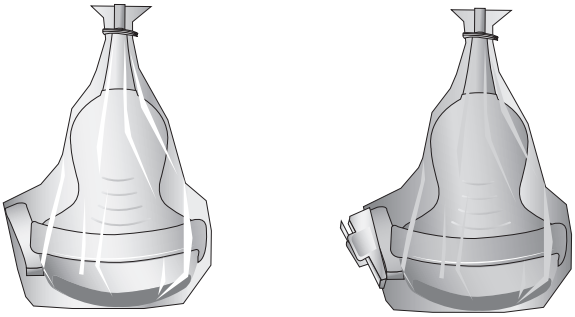

4. Installing the Needle Guide Clip.

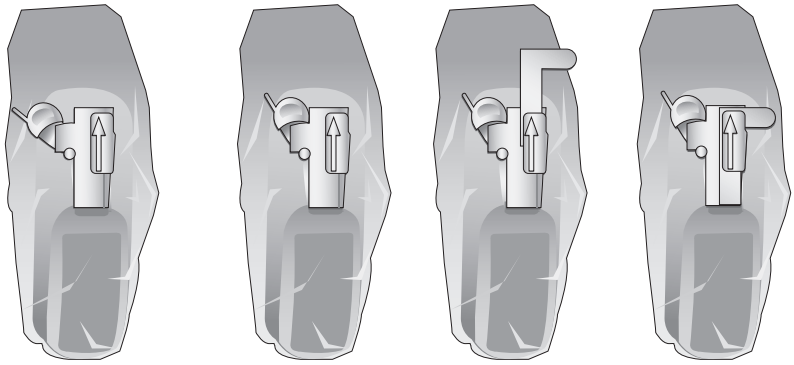

5. Install the needle into the needle guide.

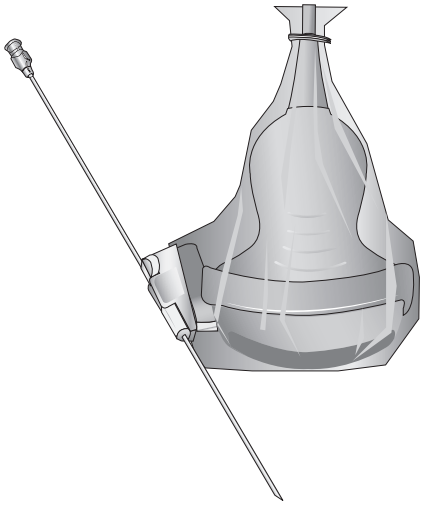

SC1-6 Biopsy Guide

Biopsy Specifications

Model name	BP-KIT-052
Components	Biopsy Adapter Needle Guide
Intersection depth	Multi Angle (40mm, 60mm, 80mm)
Available Gauges	16G, 18G, 22G, 25G

Installation

1. Mount the adapter onto the probe.

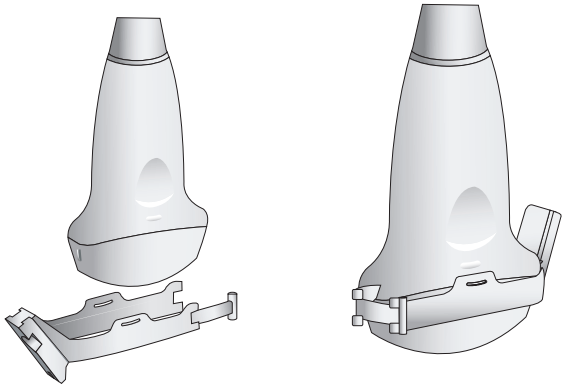

2. Fill the sheath with the ultrasound gel and place the sheath over the probe, all the way down to the Adapter.

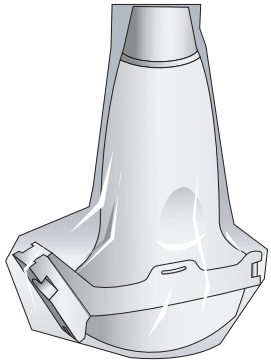

3. Mount the needle guide for the desired gauge onto the adapter.

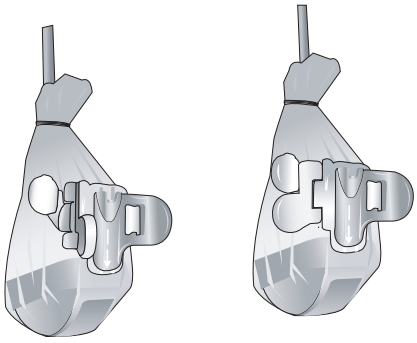

4. Install the needle into the needle guide for use.

Tips!

Using Multi Angle

Use the angle adjuster.

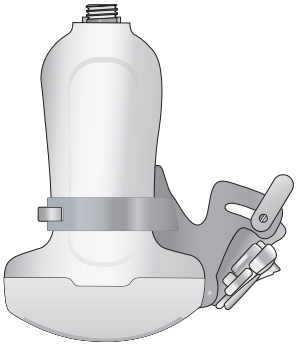

L4-7 Biopsy Guide

Biopsy Specifications

Model name	BP-KIT-043
Component	Biopsy Adapter 1 EA Needle Guide 24 EA Clip 2 EA
Available Gauges	8.5FR, 14G, 15G, 16G, 17G, 18G, 19G, 20G, 21G, 22G, 23G

Installation

1. Mount the biopsy adapter onto the probe as shown below.

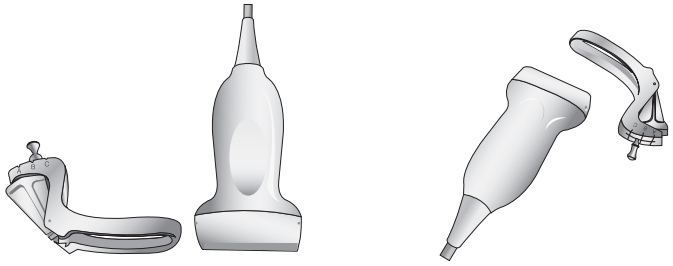

2. Selecting Bracket Angle (& Locking).

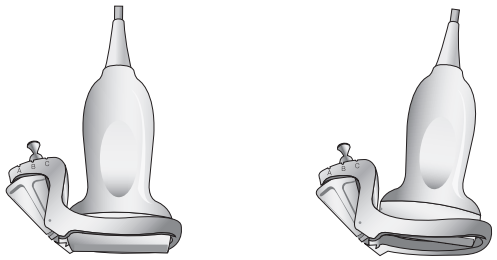

3. Insert gel into probe cover. And cover it.

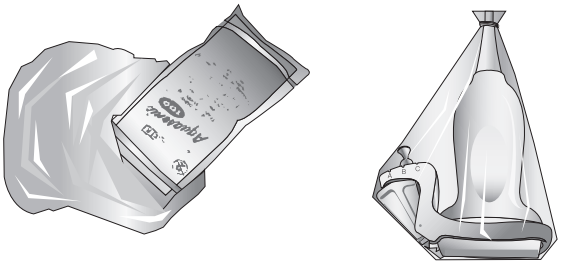

4. Installing the Needle Guide and Clip.

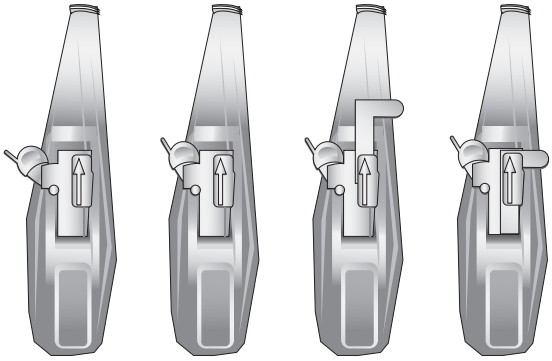

5. Install the needle into the needle guide.

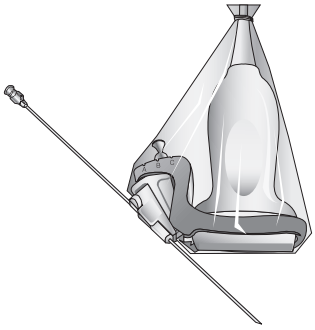

L5-13IS and L7-16IS Biopsy Guide

Biopsy Specifications

Model name	BP-KIT-012
Component	Biopsy Adapter 1 EA Needle Guide 24 EA Clip 2 EA
Available Gauges	14G, 15G, 16G, 17G, 18G, 19G, 20G, 21G, 22G, 23G

Installation

1. Mount the biopsy adapter onto the probe as shown below.

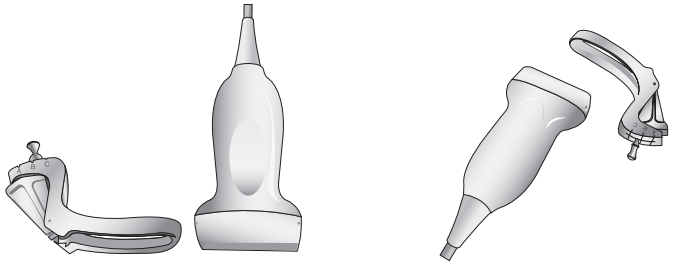

2. Selecting Bracket Angle (& Locking).

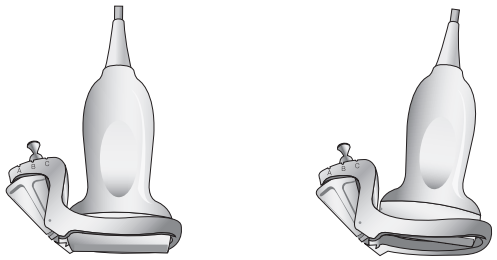

3. Insert gel into probe cover. And cover it.

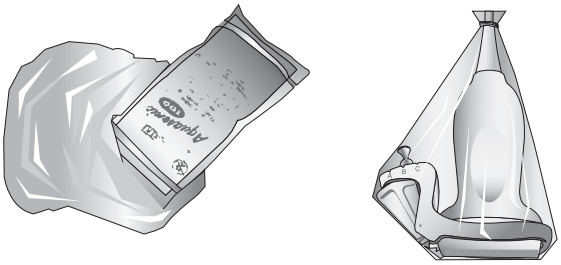

4. Installing the Needle Guide and Clip.

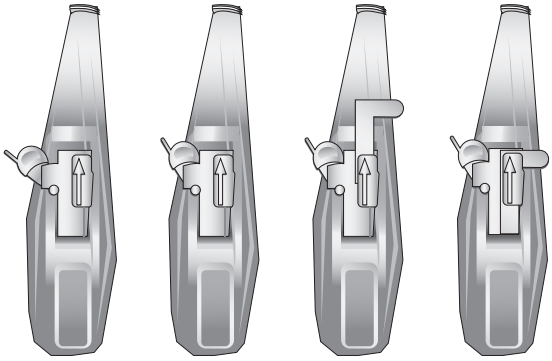

5. Install the needle into the needle guide.

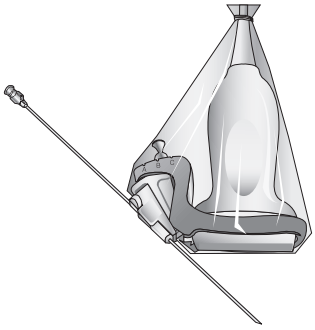

L5-13/50 Biopsy Guide

Biopsy Specifications

Model name	BP-KIT-053
Components	Biopsy Adapter Needle Guide
Intersection depth	Multi Angel (15mm, 25mm, 40mm)
Available Gauges	16G, 18G, 20G, 22G

Installation

1. Mount the adapter onto the probe.

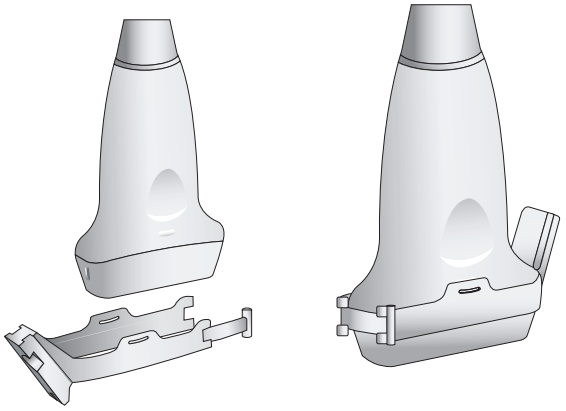

2. Fill the sheath with the ultrasound gel and place the sheath over the probe, all the way down to the Adapter.

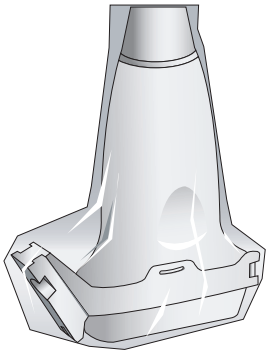

3. Mount the needle guide for the desired gauge onto the adapter.

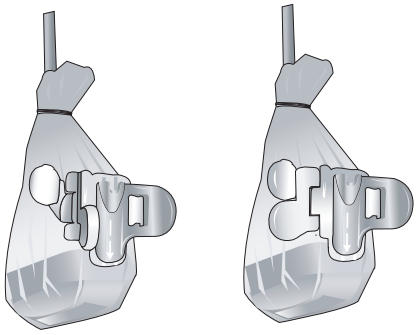

4. Install the needle into the needle guide for use.

Tips!

Using Multi Angle

Use the angle adjuster.

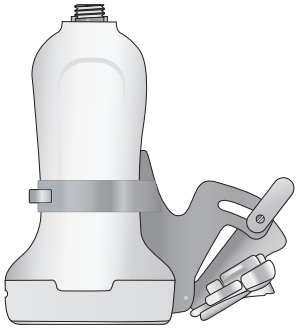

EC4-9IS Biopsy Guide

Biopsy Specifications

Model name	BP-KIT-003
Component	Biopsy Adapter 1 EA Needle Guide 1 EA
Material	PUR 2160
Available Gauges	17G

Installation

1. Mount the adapter onto the probe

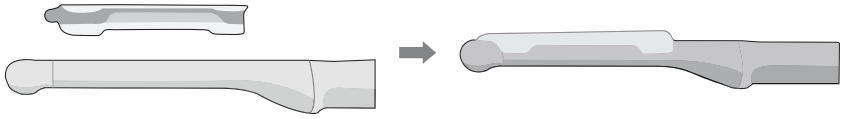

2. Put the kit's cover over the adapter and then mount the needle guide on the adapter.

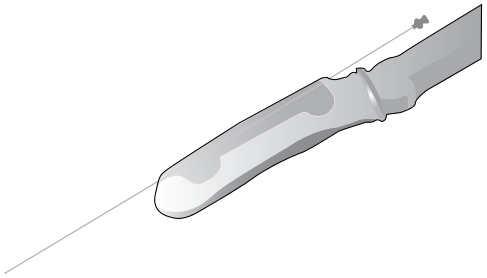

V2-6, V4-8 Biopsy Guide

Biopsy Specifications

Model name	BP-KIT-028	
Component	Biopsy Adapter	1 EA
Material	Stainless	
Available Gauges	14G, 18G, 21G	

Installation

1. Place the biopsy adapter onto the probe.

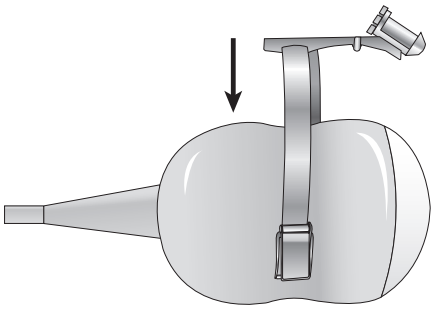

2. Push it forward until the bracket catches in the support (two notches) on the probe housing.

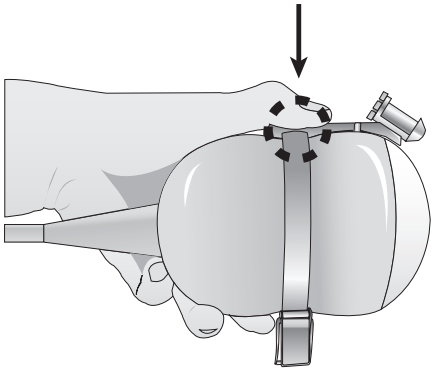

3. Fix the biopsy guide by locking the clip with the level on the opposite side of probe housing.

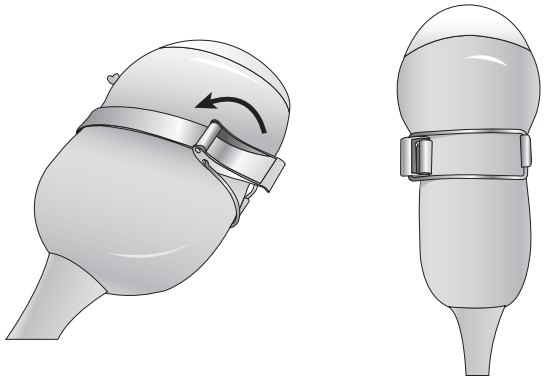

4. Install the needle into the needle guide for use.

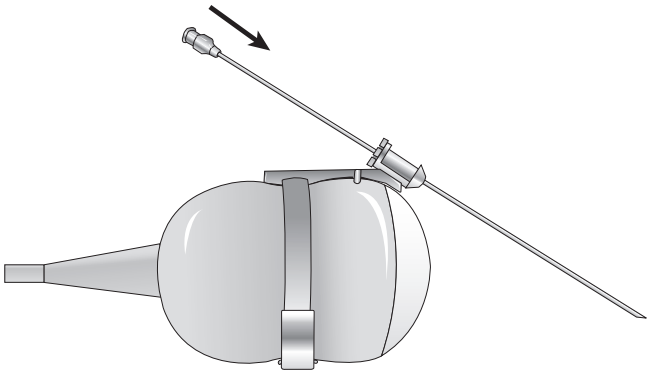

V5-9 Biopsy guide

Biopsy Specifications

Model name	BP-KIT-029	
Component	Biopsy Adapter	1 EA
Material	Stainless	
Available Gauges	18G	

Installation

1. Place the biopsy adapter onto the probe.

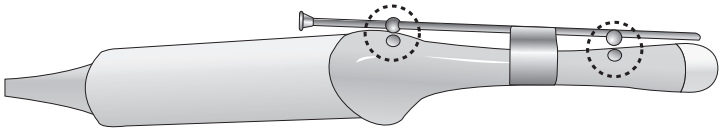

2. Install the needle into the needle guide for use.

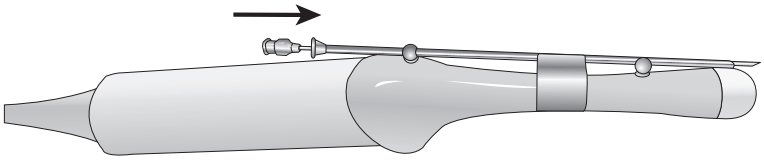

VR5-9 Biopsy guide

Biopsy Specifications

Model name	BP-KIT-041	
Component	Biopsy Adapter	1 EA
Material	ABS	
Available Gauges	16G, 17G, 18G	

Installation

1. Fill the sheath with the ultrasound gel and place the sheath all the way down to the Probe.

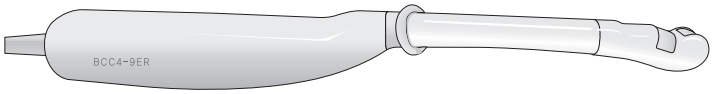

2. Mount the adapter onto the probe.

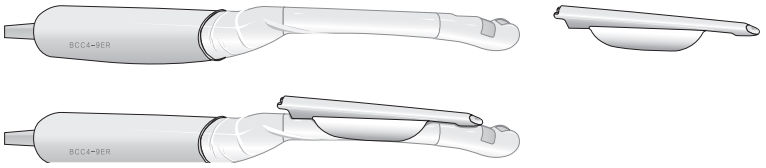

3. Cover the adaptor and probe completely with sheath..

4. Install the needle into the needle guide for use.