MUSE CV® information system

field service manual

Software Versions 005A/005B

PN 419931-012 Revision F

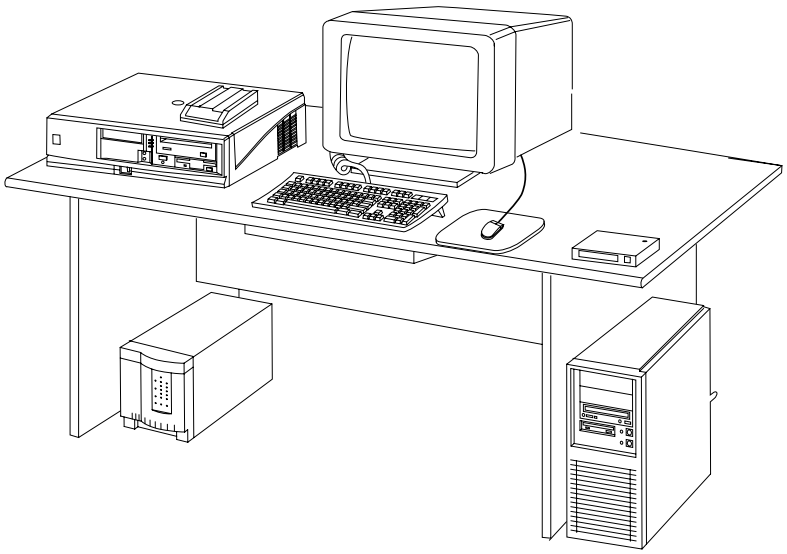

marquette

A GE Medical Systems Company

NOTE

Due to continuing product innovation, specifications in this manual are subject to change without notice.

© Copyright GE Marquette Medical Systems, Inc. 1998, 1999. All rights reserved.

Trademarked names appear throughout this document. Rather than list the names and entities that own the trademarks or insert a trademark symbol with each mention of the trademarked name, the publisher states that it is using the names only for editorial purposes and to the benefit of the trademark owner with no intention of improperly using the trademark.

900 SC, ACCUSKETCH, AccuVision, APEX, AQUA-KNOT, ARCHIVIST, Autoseq, BABY MAC, C Qwik Connect, CardioServ, CardioSmart, CardioSys, CardioWindow, CASE, CD TELEMETRY, CENTRA, CHART GUARD, CINE 35, COROLAN, CORO, COROMETRICS, Corometrics Sensor Tip, CRG PLUS, DASH, Digistore, Digital DATAQ, E for M, EAGLE, Event-Link, FMS 101B, FMS 111, HELLIGE, IQA, IMAGE STORE, INTELLIMOTION, LASER SXP, MAC, MAC-LAB, MACTRODE, MARQUETTE, MARQUETTE MAC, MARQUETTE MEDICAL SYSTEMS, MARQUETTE UNITY NETWORK, MARS, MAX, MEDITEL, MEI, MEI in the circle logo, MEMOPORT, MEMOPORT C, MINISTORE, MINNOWS, Monarch 8000, MULTI-LINK, MULTISCRIPTOR, MUSE, MUSE CV, Neo-Trak, NEUROSCRIPT, OnlineABG, OXYMONITOR, Pres-R-Cuff, PRESSURE-SCRIBE, QMI, QS, Quantitative Medicine, Quantitative Sentinel, RAMS, RSVP, SAM, SEER, SILVERTRACE, SOLAR, SOLARVIEW, Spectra 400, Spectra-Overview, Spectra-Tel, ST GUARD, TRAM, TRAM-NET, TRAM-RAC, TRAMSCOPE, TRIM KNOB, Trimline, UNITY logo, UNITY NETWORK, Vari-X, Vari-X Cardiomatic, VariCath, VARIDEX, VAS, and Vision Care Filter are trademarks of GE Marquette Medical Systems, Inc., registered in the United States Patent and Trademark Office.

12SL, 15SL, Access, AccuSpeak, ADVANTAGE, BAM, BODYTRODE, Cardiomatic, CardioSpeak, CD TELEMETRY®-LAN, CENTRALSCOPE, Corolation, EK-Pro, EDIC, Event-Link Cumulus, Event-Link Cirrus, Event-Link Nimbus, HI-RES, ICMMS, IMAGE VAULT, IMPACT.wf, INTER-LEAD, LIFEWATCH, Managed Use, MARQUETTE PRISM, MARQUETTE® RESPONDER, MENTOR, MicroSmart, MMS, MRT, MUSE CardioWindow, NST PRO, NAUTILUS, OCTANET, O_2 SENSOR, OMRS, PHi-Res, Premium, Prism, QUIK CONNECT V. QUICK CONNECT, QT Guard, RAC, SMARTLOOK, SMART-PAC, Spiral Lok, Sweetheart, UNITY, Universal, Waterfall, and Walkmom are trademarks of GE Marquette Medical Systems, Inc.

Contents

1

Introduction 1-1

Manual Information 1-3
Revision History 1-3
Manual Purpose 1-3
Chapter Content 1-3
1 Introduction 1-3
2 Equipment Overview 1-3
3 Installation 1-3
4 Assembly Procedures 1-3
5 Integrated Maintenance Suite 1-4
6 Troubleshooting 1-4
7 Maintenance 1-4
8 MUSE Network Writer Module 1-4
9 Parts Lists 1-4
Appendices 1-4
Manual Conventions 1-4
Related Manuals 1-5

Safety Information 1-8
Responsibility of the Manufacturer 1-8
General 1-8
Equipment Symbols 1-9
Warnings and Cautions 1-13

Service Information 1-14
Service Requirements 1-14
Equipment Identification 1-15
FCC Requirements 1-16
Modem Requirements 1-16
Emissions (Interference) Requirements 1-16

2

Equipment Overview 2-1

System Characteristics 2-3
General Description 2-3
Hardware 2-3
Intel File Server 2-3
Compaq RAID File Server 2-4
Desktop Workstation 2-4
Synchronous Modem Module 2-4
Optional Equipment 2-4
Software 2-7
Network Functions 2-7
Workstation Setup Guidelines 2-7
Turnkey Workstation 2-7
Multi-Use Workstation 2-7
MUSE Authentication 2-7
NT Authentication 2-8
Characteristics of a Turnkey Workstation 2-8
Characteristics of a Multi-Use Workstation 2-8

Preparation for Use 2-9
Intel File Server Interconnect Diagram 2-10
RAID File Server Interconnect Diagram 2-11
Client Interconnect Diagram 2-12
Furniture 2-13
Uninterruptible Power Supply (UPS) 2-13
Client 2-14
Monitor 2-14
Modem Module 2-15
MAC 8 Acquisition Cable 2-15
RSS Multitech Modem 2-16
CSI Multitech Modem 2-16
Keyboard and Mouse 2-17
Network Connection 2-17
Thin or Thick Ethernet 2-17
Twisted Pair 2-17
Enterprise Network 2-17
Printers 2-17
HP LaserJet 2-17
MUSE Network Writer 2-18

Powering On and System Shutdown 2-19
Introduction 2-19
Powering On the Workstation 2-19

Checkout the Workstation 2-20
Final Checkout 2-20

System Components, Controls, Indicators, and Locations 2-21
Intel File Server System 2-21
RAID File Server System 2-23
Workstation Client System 2-25
Intel File Server- Front 2-27
Intel File Server – Back 2-28
Compaq File Server Rear Panel Connectors 2-30
System I/O Board Connectors 2-31
Client – Front 2-33
Client – Back 2-34
NLX I/O Motherboard Back Panel Connectors 2-35
DAT Drive 2-36
CD-ROM Drive 2-37

3

Installation 3-1

Intel File Server Installation 3-3
Back Up and Shut Down the System (Upgrades Only) 3-3
Connect File Server 3-3
Configure TCP/IP 3-4
Adding the MUSE System File Server to the Hospital Domain (Member Server Only) 3-6
Create MUSE NT Domain Accounts 3-7
Create User Accounts Using CVUSER 3-7
Create User Accounts Using User Manager for Domains 3-8
Updating MUSE File Server Local Groups 3-10
Add Users to the Local Administrators Group 3-10
Add Users to the Local MUSE Users Group 3-10
Configuring User Options 3-11
Set the *Taskbar* options. 3-11
Updating User Account for MUSE Services 3-12
Configuring IMS 3-12
Install Network Printing 3-13
Defining a New MUSE CV System User 3-14
Defining a Windows NT User Account 3-14
Creating User Accounts Using CVUSER 3-14
Creating User Accounts Using User Manager for Domains 3-15
Create the MUSEAdmin User Account 3-15
Create the MUSEBkgnd User Account 3-15
Create User Accounts for MUSE Nodes 3-16
Adding Windows NT User Accounts to Windows NT Local Groups .. 3-16
Add Users to the Local Administrators Group 3-16
Add Users to the Local MUSE Users Group 3-17
Adding a User to the MUSE CV System 3-18
Mapping a Windows NT User to a MUSE CV System User 3-18

Windows NT Domain Trusts (PDCs Only) 3-19
Trusting of Hospital Domain(s) by the MUSE Domain 3-19
Trusting of the MUSE by Hospital Domain(s) 3-20
Verifying Network Setup (Win 95 Clients) 3-21
Verifying Network Setups (WFW Clients) 3-22
Installing Windows NT Server 4.0 Service Pack 4 3-24
Creating an Emergency Repair Disk 3-25
Merging Residual Data into the Database 3-25

Installing Network Printers 3-26
Introduction 3-26
Configuring a MMS Network Printer 3-27
Before You Begin 3-27
Set Up The Printer 3-27
Printout of Printer's Configuration 3-28
Configuring MUSE CV System to Print to Printers Shared by the Server 3-28
Configuring MUSE CV System to Print to Novell Shared Printers 3-30
Activating the Gateway 3-30
Configuring Peer to Peer Printers 3-31
Windows NT 3-31
Windows 95 3-32
Windows for Workgroups 3-32
Troubleshooting 3-33
MUSE CV Checkout 3-33
Connectivity to the Printer 3-33
MUSE CV System Errors 3-34

Defining a New MUSE CV System User 3-35
Introduction 3-35
Defining a Windows NT User Account 3-35
Creating User Accounts Using CVUSER 3-35
Creating User Accounts Using User Manager for Domains 3-36
Create the MUSEAdmin User Account 3-36
Create the MUSEBkgnd User Account 3-37
Create User Accounts for MUSE Nodes 3-37
Adding Windows NT User Accounts to Windows NT Local Groups .. 3-37
Add Users to the Local Administrators Group 3-37
Add Users to the Local MUSE Users Group 3-38
Adding a User to the MUSE CV System 3-39
Mapping a Windows NT User to a MUSE CV System User 3-40
Windows NT Domain Trusts (PDCs Only) 3-41
Trusting of Hospital Domain(s) by the MUSE Domain 3-41
Trusting of the MUSE by Hospital Domain(s) 3-42

Adjusting Fmtopts.xxx Print Settings 3-43
Change the Font 3-44
Change the Font Modifier 3-44

Change Sizes 3-44
General Rules for Editing Fmtopts.xxx Files 3-45

4

Assembly Procedures 4-1

5

Integrated Maintenance Suite 5-1

General Information 5-3
Database Backup 5-3
Network Backup 5-3

Daily Responsibilities 5-4
Rotate Backup Tapes (Not Required for Network Backup) 5-5
Review the *Event Log* 5-6
Check That the IMS Application Ran 5-6
Check for Integrity Errors 5-7
Check for a Failed Backup (Not Required for Network Backup) 5-7
Check for Proper Tape Rotation (Not Required for Network Backup) 5-7
Check for System Messages 5-8
Check for Archive (Not Required for Network Backup) 5-8
Review the *Error Log* 5-8

Weekly Responsibilities 5-9
Run the Cleaning Cartridge 5-9

Monthly Responsibilities 5-10
Update the Monthly Backup Tape 5-10
Update the Monthly Service Tape 5-10

Annual Responsibilities 5-11
Tape Replacement (Backup Tapes) 5-11
Replace the Cleaning Cartridge 5-11

Miscellaneous 5-12
Manual Backup 5-12
Changing the IMS Run Time 5-12
Getting the Media Create Date and Label 5-13
Other Files 5-13

Disaster Recovery 5-14

Introduction 5-14
System Information 5-14
Required Software 5-14
NT Specific Recovery 5-15
Backing up the Registry 5-15
Redoing the Emergency Repair Disk 5-15
Reapplying the NT Service Pack 5-15
Creating NT Boot Disks 5-15
How to Create a Windows NT Boot Floppy 5-16
Recovery Steps 5-18
Typical boot failure messages 5-18
Rebuilding a Bad Drive 5-19
Windows 95 Specific Recovery 5-19

System Shutdown & Restart Procedures 5-20
Shutdown the MUSE CV System 5-20
Shutdown the NT File Server 5-22
Power Up Procedure 5-22
Start-Up Verification 5-22

6

Troubleshooting 6-1

Assembly Descriptions 6-3
Introduction 6-3
File Server 6-3
Desktop Client 6-3
Monitors 6-3
UPS 6-3
HP LaserJet 4000N Printer 6-3
MUSE Network Writer 6-3

Assembly Block Diagram 6-4
Theory of Operation 6-6
File Server 6-6
Workstation Client 6-6
Synchronous Modem Module 6-6
Network Interface 6-7
PCB 34010 Writer Board 6-7
MAC 8 Acquisition Cable 6-7
Monitors 6-7
Printers 6-7
Uninterruptible Power Supply 6-7

General Fault Isolation 6-8
First Things to Ask 6-8
Visual Inspection 6-8

7

Maintenance 7-1

Introduction 7-3
Recommended Maintenance 7-3
Inspection Report 7-3
Required Tools and Supplies 7-4

Pre-service Procedures 7-5
System Shutdown 7-5

Inspection and Cleaning 7-6
Visual Inspection 7-6
Precautions 7-6
Exterior Cleaning 7-6
Cleaning the Monitor Screen 7-6
Interior Cleaning 7-7
Cleaning the System Box Interior 7-7
Cleaning the Floppy Diskette Drive 7-7
Cleaning the DAT Drive 7-7
Cleaning the CD-ROM Drive 7-8
Cleaning the Printer 7-8
UPS Maintenance 7-8

Disassembly Guidelines 7-10
PCB Assemblies 7-10
Hardware 7-10
Opening the File Server 7-10
Opening the HP LaserJet 4000NPrinter 7-10
Opening the MUSE Network Writer 7-10

System Checkout 7-11
Checkout Procedure 7-11

Equipment Safety Tests 7-12
Introduction 7-12
Preparation for Tests 7-13
Test #1 – Ground-Wire-Leakage-to-Ground Test 7-14
Test #2 – Chassis-Leakage-to-Ground (Exposed Chassis) Test 7-15

Miscellaneous Maintenance Form 7-16

8

MUSE Network Writer Module 8-1

Introduction 8-3

Theory **8-4**
Introduction 8-4
Power Supply Assembly 8-5
Network Writer Interface PCB Assembly 8-5
Different Versions/Compatibility 8-5
Motor Control PCB Assembly 8-5
Thermal Print Head Resistance 8-5
Internal/External Memory 8-5
LED PCB Assembly 8-6
Writer Door Optic Cable Assembly 8-6
Thermal Writer Assembly 8-7
Thermal Print Head 8-7
Motor with Tach Assembly 8-7
Optic Cable Assembly 8-7

Controls, Connectors, and Indicators **8-9**
Front/Top 8-9
Back 8-9

Cleaning **8-10**
Cleaning the Thermal Print Head 8-10

Adjustments **8-11**
Thermal Writer Adjustment Procedures 8-11
Paper Position Adjustment 8-11
Thermal Paper Tracking 8-11
Thermal Paper Tracking Adjustment 8-12
Thermal Print Head Pressure Adjustment 8-13
Optic Cable Assembly (Queuing Sensor) Adjustment 8-16
Writer Door Optic Cable Assembly Adjustment 8-17
Jumper/Switch Settings 8-18
Motor Control PCB Assembly 8-18
Network Writer/Local Acquisition Port Interface PCB Assembly . 8-18

Known Problems **8-19**
Static 8-19
Failure to Load Writer DRAM During Boot 8-19

Selecting the Defective Assembly **8-20**
Writer Diagnostics 8-20
Writer Tests 8-20
MAC 6/MAC PC Local Acquisition Port Tests 8-21
Removing/Installing the Top Cover 8-24
Installation 8-25
Removing/Installing the Writer Door Optic Cable Assembly 8-26
Removal 8-26
Installation 8-26
Removing/Installing the LED PCB Assembly 8-27

Removal 8-27
Installation 8-27
Removing/Installing the Writer/Tray Assembly 8-28
Removal 8-28
Installation 8-28
Removing/Installing the Thermal Writer Assembly 8-29
Removal 8-29
Installation 8-29
Disassembly/Assembly 8-30
Exploded View 8-30
Removing/Installing the Thermal Print Head 8-31
Removing/Installing the Optic Cable Assembly (Queuing Sensor) ... 8-33
Removing/Installing the Power Supply Assembly 8-34
Removal 8-34
Installation 8-34
Removing/Installing the Motor Control PCB Assembly 8-35
Removal 8-35
Installation 8-35

9

Parts Lists 9-1

Ordering Parts 9-5
Introduction 9-5

Field Replaceable Units 9-6

FSHRD (Rev A) 9-14

FSSFT (Rev A) 9-18

CLHRD (Rev A) 9-20

CLSFT (Rev A1) 9-24

WSHW (Rev A1) 9-27

D900124AMUSE Nightshade Integrated 9-31

Compaq Server Assy, 901107-1XX 9-33

901070-001 (Rev E)MUSE Desktop Assembly 9-39

900135-501(Rev G)Communication Server 9-42

900680-501 (Rev G)MUSE Gateway 9-44

900129-5XX (Rev J)Network Workstation 9-45

405864-011 (Rev A)Network Writer Assembly 9-48

405864-012 (Rev A)Network Writer Assembly (220-240V) 9-50

405864-013 Rev A)Network Writer Assembly (240 V) Brit 9-53

400303-104 Rev C)8-Inch Writer Assembly 9-56

413453-002 Rev E)Writer Sub-Assembly 9-57

900723-XXXInternational Modems 9-58
Generic 220V 9-58
Germany 9-58
France 9-58
Sweden 9-59
United Kingdom 9-59
Spain 9-59
Italy 9-59
Australia 9-59
Austria 9-60
Bahrain 9-60
Belgium 9-60
Czechoslovakia 9-60
Denmark 9-61
Finland 9-61
Hungary 9-61
Iceland 9-61
Ireland 9-61
Japan 9-62
Russia 9-62
Malaysia 9-62
Mexico 9-62
Netherlands 9-63
New Zealand 9-63
Norway 9-63
Poland 9-64
Portugal 9-64
Singapore 9-64
South Africa 9-64
Switzerland 9-65
Turkey 9-65
Ukraine 9-65
Hong Kong 9-65
Slovak Republic 9-65

Kits 9-66
900811-001 (Rev C) – KIT MUSE DICTATION 9-66
900811-001 (Rev C) – KIT MUSE DICTATION 9-66
900684-003 (Rev C) – KIT MUSE DIGIBOARD 9-66

900684-004 (Rev B) – KIT MUSE DIGIBOARD 9-66
900471-201 (Rev C) – KIT NTWK MUSE THIN ETHERNET 9-66
901215-001 (Rev A) – KIT MUSE WRITER BRD/CBL NON-CE 9-66
901206-001 (Rev A1) – KIT MUSE ACC REGISTRY DRV/SW 9-67
901124-001 (Rev A) – KIT MUSE DAT TAPES/LBLS/CLNG 9-67
2000390-001 (Rev A) – KIT MUSE FS UPGR 200MHZ 5A ENG 9-67
901072-001 (Rev B) – Kit MUSE DAT Drive 12GB 9-68

Sub-Assemblies 9-69
Wire 16 GA Brown 2.5L (PN 80307-041B) 9-69
Wire 16 GA Grn/Yel 4L (PN 80307-053A) 9-69
Cable 10 Conductor Ribbon 11 Inch (PN 80616-001H) 9-69
Cable Power Dist MUSE Network Writer (PN 80862-002A) 9-70
Cable Door Opt Sensor MUSE Writer (PN 88114-006) 9-70
MAC6/8 Acquisition Deskside Assy – (PN 405835-009D) 9-71
Kit Metal MUSE Network Writer (PN 420287-001B) 9-71
Cable Internal MUSE Network I/O (PN 700081-001B) 9-71
Cable INT Power Writer (PN 700083-001C) 9-72
Cable PVC Thin-net Coax 15Ft (PN 700109-015B) 9-72
Cable Pwr/Pwr Supply MUSE Writer (PN 700111-001D) 9-72
Cable Writer Intcon (PN 700145-001A) 9-73
Harness MAC 8/MUSE Writer Serial (PN 700461-002C) 9-73
Cable D9 M/D9 F MAC 8/MUSE (PN 700491-002E) 9-73
Kit Modem (PN 900192-001C) 9-74
PS/2 Barcode Wand with Edit Label (PN 900266-103E) 9-74
Twisted Pair PCI (PN 900471-402D) 9-74
Kit Keyboard – English (PN 900508-001D) 9-74
Kit Laser Printer PS2 –100-120V (PN 900623-001D) 9-75
Kit Laser Printer PS2 –220-240V (PN 900623-002E) 9-75
Kit Multitech Modem – 120V (PN 900723-001A) 9-76
Kit PCI Video Board (PN 900881-004C) 9-76
Kit MUSE CD-ROM/Disk (PN 900881-011B) 9-76

Appendix A: Abbreviations A-1

Standard Abbreviations A-3

Appendix B: Technical Description B-1

Intel File Server B-3
System Unit B-3
Columbus II Chassis B-3
Electrical Power Supply B-3
Environment B-4
Safety Regulations B-4
Electromagnetic Compatibility B-4
Hard Disk Drive B-5

CD-ROM Drive B-5
Ribbon Cable B-5

Compaq Server – ProLiant 3000R B-6
System Unit B-6
Power Supply B-6
SDRAM Dual Inline Memory Modules B-7
1.44-MB Diskette Drive B-7
IDE CD-ROM Drive B-8
Integrated Dual-Channel Wide-Ultra SCSI Controller B-9
9.1GB Hot-Plug Hard Drive B-9
Rack-Mounted UPS B-10

21-inch Color Monitor B-12

17-inch Color Monitor B-13

15-inch Color Monitor B-14

Client B-15

Client Hard Drive B-16
Specifications B-16
Disk Drive Configuration B-16
Performance Specifications B-16
Reliability Specifications B-16
Physical Specifications B-17
Environmental Limits B-17
Power Specifications B-17

Client CD-ROM Drive B-18
General B-18
Performance B-18
Reliability B-18
Audio B-18
Environmental B-18
Power B-19
Physical B-19
Connectors B-19
Regulatory B-19

HP Laser Printer B-20
Physical Specifications B-21
Electrical specifications B-21
Minimum recommended circuit capacity B-21
Environmental specifications B-21
Acoustic emissions (per ISO 9296) B-21
Safety certifications B-21

Zip Drive Parallel Port **B-23**
Performance B-23
Reliability and Service B-23
General B-23
Operating Conditions B-23

MUSE Network Writer **B-25**

Safety **B-26**

Index **Index-1**

1 Introduction

Manual Information **1-3**
Revision History 1-3
Manual Purpose 1-3
Chapter Content 1-3
1 Introduction 1-3
2 Equipment Overview 1-3
3 Installation 1-3
4 Assembly Procedures 1-3
5 Integrated Maintenance Suite 1-4
6 Troubleshooting 1-4
7 Maintenance 1-4
8 MUSE Network Writer Module 1-4
9 Parts Lists 1-4
Appendices 1-4
Manual Conventions 1-4
Related Manuals 1-5

Safety Information **1-8**
Responsibility of the Manufacturer 1-8
General 1-8
Equipment Symbols 1-9
Warnings and Cautions 1-13

Service Information **1-14**
Service Requirements 1-14
Equipment Identification 1-15
FCC Requirements 1-16
Modem Requirements 1-16
Emissions (Interference) Requirements 1-16

Manual Information

Revision History

Each page of the document has the document part number followed by a revision letter at the bottom of the page. This letter identifies the document's update level. The revision history of this document is summarized in the table below.

Table 1-1. Revision History

Revision	Date	Comment
A	16 March 1998	Initial release of manual.
B	3 August 1998	Added network backup information to IMS chapter. Added RAID information.
C	10 November 1998	Updated parts lists and UPS maintenance information. Deleted vendor manuals.
D	20 February 1999	Updated parts lists.
E	16 March 1999	Extended manual to version 005B software.
F	7 October 1999	Revised to reflect new Intel file server, new client hard drive, new laser printer, new 15-inch monitor, new client CD drive.

Manual Purpose

This manual supplies technical information for service representatives and technical personnel so they can maintain the equipment to the assembly level. Use it as a guide for maintenance and electrical repairs considered field repairable. Where necessary the manual identifies additional sources of relevant information and or technical assistance.

See the operator manual for the instructions necessary to operate the equipment safely in accordance with its function and intended use.

Chapter Content

This manual is organized into chapters and appendices:

1 Introduction

Describes the service manual and chapter contents. Provides general information on safety, service requirements, equipment symbols, and serial number identification.

2 Equipment Overview

Describes the equipment and its characteristics, connector locations, and preparation for use.

3 Installation

Describes how MUSE CV system installation procedures.

4 Assembly Procedures

This chapter contains the current assembly procedures used to build MUSE CV system components when manufactured by GE Marquette.

5 Integrated Maintenance Suite Describes how use the Integrated Maintenance Suite (IMS) to back and archive data on the MUSE CV system. Also describes how to use IMS for disaster recovery.

6 Troubleshooting Provides overall and specific troubleshooting help.

7 Maintenance Contains a preventive maintenance schedule, instructions for opening the unit, and cleaning guidelines.

8 MUSE Network Writer Module Contains theory, description of controls and indicators, assembly and disassembly instructions, and maintenance and troubleshooting procedures for the MUSE Network Writer.

9 Parts Lists Contains parts lists for reference in repairing the unit at the assembly level.

Appendices A list of abbreviations is provided in Appendix A. Technical Specifications are found in Appendix B.

Manual Conventions

The following is a list of conventions used throughout the manual.

- Items shown in **Bold** text are keys on the keyboard, text to be entered, or hardware items such as buttons or switches on the equipment.
- To perform an operation which appears with a plus (+) sign between the names of two keys, you press and hold the first key while pressing the second key once. This is called a keystroke combination.

  For example, “Press **Ctrl** + **Esc**” means to press and hold down the **Ctrl** key while pressing the **Esc** key.
- When instructions are given for typing a precise text string with one or more spaces, the point where the spacebar must be pressed is indicated as: <**Space**>. The purpose of the < > brackets is to ensure you press the spacebar when required.
- **Enter** means to press the “Enter” or “Return” key on the keyboard. Do not type “enter”.
- *Italicized* items are software terms which identify menu items, buttons, or options in various windows.

Related Manuals

See these documents if you need additional information.

Table 1-2. MUSE CV system Related Documents	
Part Number	**Name**
419931-001	MUSE CV information system Operator's Manual (version 005A)
421619-001	MUSE CV information system Operator's Manual (version 005B)
Laser Printer Hewlett-Packard Company 11311 Chinden Boulevard Boise, Idaho 83714 U.S.A.	
C4118-91060	HP LaserJet 4000, 4000T, 4000N, and 4000TN Printers User's Guide
C4118-90972	HP LaserJet 4000 and 4000N Printers Getting Started Guide
5966-5171	HP JetDirect Printer Server Software Installation Guide
UPS (Intel File Server) POWERVAR	
05141270	Uninterruptible Power Supply 400VA-2200VA
Modem Multi-Tech Systems, Inc. 2205 Woodale Drive Mounds View, MN 55112 U.S.A.	
82027804	Quick Reference Guide ZDX MultiModem
DAT Tape Drive Hewlett-Packard Company 11311 Chinden Boulevard Boise, Idaho 83714 U.S.A	
C1533-90901	HP C1533A DDS-2 Tape Drive User's Manual
C1533-90903	Connecting HP DDS Tape Drives in PC Environments
409623-001	Storage Device Cleaning Information
Printer	
OKIDATA 532 Fellowship Road Mount Laurel, New Jersey 08054	
59230803	Microline 320/321 *Setup Guide*
59230903	Microline 320/321 Epson/IBM Compatible *Reference Guide*
Graphic's Card	
ATI Technologies Inc.	
10701F2320	User's Guide mach 64

Table 1-2. MUSE CV system Related Documents (Continued)	
Part Number	**Name**
SCSI Host Adapter Card Adaptec, Inc. 691 South Milpitas Blvd. Milpitas, CA 95035	
510888-00	User's Guide — AHA-2940 *Ultra*/2940 *Ultra* Wide PCI-to-Ultra SCSI Host Adapter with SCSI *Select*
510889-00	Installation Guide — AHA-2940 *Ultra*/2940 *Ultra* Wide PCI-to-Ultra SCSI Host Adapter with SCSI *Select*
Networking Thomas-Conrad Corporation 12301 Technology Blvd. Austin, Texas 78727	
615-10006-002	TC4145 16/4 Token Ring Adapter Plug and Play ISA Installation Guide
615-4050-004	TC4050 Token Ring MAU Installation Guide
Ethernet Adapter Circuit Board (Used in networked file servers, acquisition server/processing stations, and workstation computers)	
Western Digital Corporation 2445 McCabe Way Irvine, CA 92714 (800) 847-6181 (714) 863-0102 TLX 910-595-1139	EtherCard Plus Ethernet Station Adapter User Installation Guide
Standard Microsystems Corporation (800) SMC-4-YOU in USA (800) 833-4-SMC in Canada (516) 273-3100 elsewhere	EtherCardPLUS Elite 16 Series manual
SCSI Host Adapter (Used in file servers, acquisition server/ processing stations, and workstation computers)	
Future Domain Corporation 2801 McGaw Avenue Irvine, CA 92714 (714) 253-0400 FAX (714) 253-0913	Future Domain TMC-1660/TMC1680 User's Guide
Adaptec 691 South Milpitas Blvd. Milpitas, CA 95035 (408)945-8600	Adaptec AHA-1540B/1542B User's Manual

Table 1-2. MUSE CV system Related Documents (Continued)	
Part Number	**Name**
Hercules Graphics Interface	
Hercules Computer Technology, Inc. 912 Parker Street Berkeley, CA 94710 TELEX 754063 HERCULES UD	Hercules Graphics Station Card Owner's Manual
Digital Audio Tape (DAT) Drive	
Archive Corporation 1650 Sunflower Avenue Costa Mesa, CA 92626 (714) 641-1230 FAX: (714) 641-2590	Quick Installation Guide for Pythion DAT Tape Drives
	Python DDS-DC Data Compression DAT Tape Drives Product Description Manual (for models 4322, 4542, and 4352)
	Archive Information Manager User's Manual (DOS Version)
Bar Code Reader	
Hewlett Packard Co.	HP KeyWand Bar Code Reader Technical Reference Manual (Part Number HBCK-1915)
	HP KeyWand Bar Code Reader Installation and Operation Guide (Part Number HBCK-1910)

Safety Information

Responsibility of the Manufacturer

GE Marquette Medical Systems is responsible for the effects of safety, reliability, and performance only if:

- Assembly operations, extensions, readjustments, modifications, or repairs are carried out by persons authorized by GE Marquette.
- The electrical installation of the relevant room complies with the requirements of the appropriate regulations.
- The equipment is used in accordance with the instructions for use.

General

This device is intended for use under the direct supervision of a licensed health care practitioner.

The device stores ECGs generated by a computerized analysis program which can be used as a tool in ECG tracing interpretation. This computerized interpretation is only significant when used in conjunction with clinical findings. All computer-generated tracings should be overrread by a qualified physician.

To ensure patient safety, use only parts and accessories manufactured or recommended by GE Marquette Medical Systems.

Contact GE Marquette Medical Systems for information before connecting any devices to this equipment that are not recommended in this manual.

If the installation of this equipment, in the USA, will use 240 V rather than 120 V, the source must be a center-tapped, 240 V, single-phase circuit.

Parts and accessories used must meet the requirements of the applicable IEC 601 series safety standards, and/or the system configuration must meet the requirements of the IEC 601-1-1 medical electrical systems standard.

The use of ACCESSORY equipment not complying with the equivalent safety requirements of this equipment may lead to a reduced level of safety of the resulting system. Consideration relating to the choice shall include:

- use of the accessory in the PATIENT VICINITY; and
- evidence that the safety certification of the ACCESSORY has been performed in accordance to the appropriate IEC 601-1 and/or IEC 601-1-1 harmonized national standard.

Equipment Symbols

See the OEM manual(s) for the following devices for an explanation of the symbols appearing on the equipment.

- HP LaserJet Printer 4000N
- Sony Monitors (15, 17, and 20”)
- Intel System Boxes
  - File Server
  - Client workstation
- POWERVAR Uninterruptible Power Supply (UPS)
- MAU Token Ring Thomas Conrad
- RSS and CSI Multitech Modems
- HP C1533A DDS-2 Tape Drive (DAT Drive)
- OKIDATA Dot Matrix Printer

Symbols not found in the OEM manuals are explained below.

This symbol means that you must pay attention to the documents delivered with this equipment. It calls attention to the things to which you must pay special attention during operation and when the equipment is operated in conjunction with other equipment.

In Europe, this symbol means dangerous or high voltage. In the United States, this symbol represents the caution notice below:

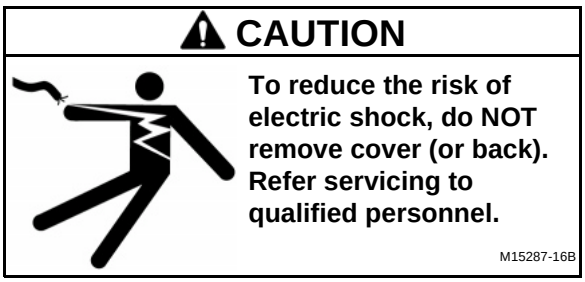

Intel File server

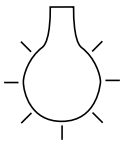

Power on/off light. Turns on when the system power is on.

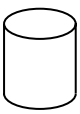

Hard disk light. Turns on when the system reads or writes to the hard disk.

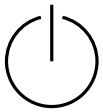

Power control button.

Compaq File Server

Any surface or area of the equipment marked with these symbols indicates the presence of a hot surface or hot component. If this surface is contacted, the potential for injury exists. To reduce risk of injury from a hot component, allow the surface to cool before touching.

Any surface or area of the equipment marked with these symbols indicates the presence of electrical shock hazards. The enclosed area contains no operator serviceable parts. To reduce risk of injury from electrical shock hazards, do not open this enclosure.

Any RJ-45 receptacle marked with these symbols indicates a Network Interface Connection. To reduce risk of electrical shock, fire, or damage to the equipment, do not plug telephone or telecommunications connectors into this receptacle.

This label or equivalent is located on the surface of your CD-ROM drive. This label indicates that the product is classified as a CLASS 1 LASER PRODUCT.

UPS (Compaq File Server)

This symbol indicates you should not discard the UPS or the batteries in the trash. The UPS may contain sealed, lead-acid batteries. Batteries must be recycled.

CD-ROM Drive

CD headphone jack.

Adjustment control dial.

CD eject button.

The bar code on the MAC 8 acquisition assembly which allows you to acquire records from a diskette.

MUSE Network Writer

Power switch. Press I to turn power ON. Press O to turn power OFF.

Attention — Read manual. The amber writer fault LED under this symbol means that the writer door is open or a paper jam has occurred.

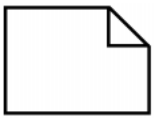

Paper out. This amber LED is lit when the MUSE Network Writer is out of paper.

Power on/ECG printing. This green LED is on solid when power is applied to the MUSE Network Writer. It flashes when the writer is printing.

WARNING

Replace only with the same type and rating of fuse.

M15287-2B

Fuse.

Alternating current (AC).

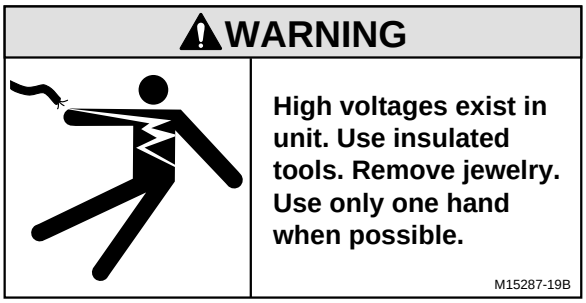

High Voltage. Only qualified service personnel should remove cover.

M13495, MD1280-26, MD1280-28, MD1280-29, M13546, MD1280-17, M14819

MD1280-18, M15295-154A, M15295-120A, MD1011-166, M15295-152A, M13571, M13504A

Warnings and Cautions

DANGER

Do NOT use in the presence of flammable anesthetics.

M15287-1B

WARNING

Replace only with the same type and rating of fuse.

M15287-2B

WARNING

This is Class I equipment. The mains plug must be connected to an appropriate power supply.

M15287-5C

WARNING

Turn off power and disconnect power cord from AC power source before removing the cover.

M15287-23C

WARNING

Disconnect patient from unit BEFORE connecting personal computer to unit.

M15287-12C

CAUTION

This equipment contains no user serviceable parts. Refer servicing to qualified service personnel.

M15287-38A

CAUTION

To reduce the risk of electric shock, do NOT remove cover (or back). Refer servicing to qualified personnel.

M15287-16B

CAUTION

U.S. Federal law restricts this device to sale by or on the order of a physician.

M15287-17B

Service Information

Service Requirements

Refer equipment servicing to GE Marquette Medical Systems' authorized service personnel only. Any unauthorized attempt to repair equipment under warranty voids that warranty.

It is the user's responsibility to report the need for service to GE Marquette Medical Systems or to one of their authorized agents.

Failure on the part of the responsible individual, hospital, or institution using this equipment to implement a satisfactory maintenance schedule may cause undue equipment failure and possible health hazards.

Regular maintenance, irrespective of usage, is essential to ensure that the MUSE CV information system will always be functional when required

Equipment Identification

Every GE Marquette Medical Systems device has a unique serial number for identification. The serial number appears on the product label on the base of each unit.

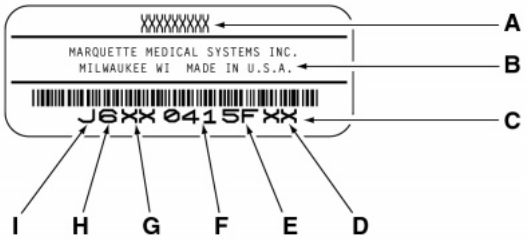

MD1113-022B

Table 1-3. Equipment Identifications

Item	Name	Description
A	name of device	MUSE CV information system
B	manufacturer	Marquette Medical Systems, Inc.
C	serial number	Unique identifier
D	device characteristics	One or two letters that further describe the unit, for example: P = prototype not conforming to marketing specification; R = refurbished equipment; S = special product documented under Specials part numbers; U = upgraded unit
E	division	F = Cardiology G = Monitoring J = Cath Lab
F	product sequence number	Manufacturing number (of total units manufactured)
G	product code	Two-character product descriptor AA = MUSE Tower File Server AB = MUSE Desktop File Server AC = MUSE Communication Server AG = MUSE File Server AF = MUSE Client SDLC AH = MUSE Client SC = MUSE Modem Acquisition Station SE = MUSE 5000 system SF = MUSE 1000 system SH = MUSE 5000 Acquisition Server SK = MUSE Network Station SR = MUSE Telephone Retrieval Station ST = MUSE Network Writer SU = S-5000 File Server (Additional) SV = Remote Work Station S8 = MUSE 3000 System TE = MUSE Gateway Station
H	year manufactured	7 = 1997, 8 = 1998, (and so on)
I	month manufactured	A = January, B = February, C = March, D = April, E = May, F = June, G = July, H = August, J = September, K = October, L = November, M = December

FCC Requirements

Modem Requirements

The modem in your GE Marquette device is designed to comply with FCC part 68, U.S. Telecommunication Requirements. See the equipment label on the GE Marquette device for the FCC registration number and the ringer equivalence number. The device is designed to be used on standard device telephone lines. Connection to telephone company-provided coin service (central office implemented systems) is prohibited. Connection to party lines service is subject to state tariffs.

The goal of the telephone company is to provide you the best service it can. In order to do this, it may occasionally be necessary for them to make changes in their equipment, operations, or procedures. If these changes might affect your service or the operation of your equipment, the telephone company will give you notice, in writing, to allow you to make any changes necessary to maintain uninterrupted service. If you have any questions about your telephone line, such as how many pieces of equipment you can connect to it, the telephone company will provide this information upon request.

In certain circumstances, it may be necessary for the telephone company to request information from you concerning the equipment which you have connected to your telephone line. Upon request of the telephone company, provide the FCC registration number and the ringer equivalence number (REN) of the equipment which is connected to your line; both of these items are listed on the equipment label. The sum of all of the RENs on your telephone lines should be less than 5 in order to assure proper service from your telephone company. In some cases, a sum of 5 may not be usable on a given line.

If any of your telephone equipment is not operating properly, you should immediately remove it from your telephone line, as it may cause harm to the telephone network. If the telephone company notes a problem, they may temporarily discontinue service. When practical, they will notify you in advance of this disconnection. If advance notice is not feasible, you will be notified as soon as possible. When you are notified, you will be given the opportunity to correct the problem and informed of your right to file a complaint with the FCC.

An analog telephone line is required. A digital PBX line will not work.

Emissions (Interference) Requirements

This GE Marquette device has been tested and complies with the limits for a Class B computing device in accordance with the specifications in Part 15 of the FCC rules. These rules are designed to provide reasonable protection against radio-frequency interference. However, there is no guarantee that interference will not occur in a particular installation.

You can tell whether this device is causing interference by turning it off. If the interference stops, it was probably caused by the device.

2 Equipment Overview

System Characteristics 2-3
General Description 2-3
Hardware 2-3
Intel File Server 2-3
Compaq RAID File Server 2-4
Desktop Workstation 2-4
Synchronous Modem Module 2-4
Optional Equipment 2-4
Software 2-7
Network Functions 2-7
Workstation Setup Guidelines 2-7
Turnkey Workstation 2-7
Multi-Use Workstation 2-7
MUSE Authentication 2-7
NT Authentication 2-8
Characteristics of a Turnkey Workstation 2-8
Characteristics of a Multi-Use Workstation 2-8

Preparation for Use 2-9
Intel File Server Interconnect Diagram 2-10
RAID File Server Interconnect Diagram 2-11
Client Interconnect Diagram 2-12
Furniture 2-13
Uninterruptible Power Supply (UPS) 2-13
Client 2-14
Monitor 2-14
Modem Module 2-15
MAC 8 Acquisition Cable 2-15
RSS Multitech Modem 2-16
CSI Multitech Modem 2-16
Keyboard and Mouse 2-17
Network Connection 2-17
Thin or Thick Ethernet 2-17
Twisted Pair 2-17
Enterprise Network 2-17
Printers 2-17
HP LaserJet 2-17
MUSE Network Writer 2-18

Powering On and System Shutdown 2-19

Introduction 2-19
Powering On the Workstation 2-19

Checkout the Workstation 2-20
Final Checkout 2-20

System Components, Controls, Indicators, and Locations 2-21
Intel File Server System 2-21
RAID File Server System 2-23
Workstation Client System 2-25
Intel File Server- Front 2-27
Intel File Server – Back 2-28
Compaq File Server Rear Panel Connectors 2-30
System I/O Board Connectors 2-31
Client – Front 2-33
Client – Back 2-34
NLX I/O Motherboard Back Panel Connectors 2-35
DAT Drive 2-36
CD-ROM Drive 2-37

System Characteristics

General Description

The MUSE CV system is a multiple data-type system designed for managing cardiology data. It allows you to edit and store data acquired from many different areas. Data may be acquired from areas within the hospital, as well as from areas not directly connected to the hospital such as emergency care and outreach facilities.

The MUSE CV system has a file server running Windows NT which is networked to one or more workstations. The products range from a low-cost, single data-type system to multiple data-type systems with many workstations and virtually unlimited ECG storage capabilities. Options can be added to the standard configuration to suit a customer's particular needs.

Compaq Proliant 3000R, 450MHZ PII, 512K, 128MB RAM, rack-mountable

Hardware

The MUSE CV system is configured with an Intel-based file server. There are two file server options:

1. Intel 440BX file server with 500MHz Pentium® III processor with 100-MHz system bus; 512 KB integrated L2 cache, 256MB DIMM PC100 ECC, Seagate 18GB LVD 1-inch hard drive, Sony 40X IDE CD-ROM drive,
2. Compaq Proliant 3000R with 450MHz, Pentium 450MHZ PII, 512K, 128MB RAM, rack- mountable Compaq

Intel File Server

The Intel file server comes equipped with the following system peripherals: a keyboard, Microsoft mouse, 3.5" floppy diskette drive, CD-ROM drive, and a Hewlett-Packard digital audio tape (DAT) drive. In addition, a typical system includes a POWERVAR uninterruptible power supply (UPS) and a 56Kbps Multi-tech modem for remote system support (RSS).

NOTE

The telephone line must be an analog telephone line for communication with the host MUSE CV system to work properly. Newer digital telephone systems will not work with this equipment.

The UPS conditions incoming power to protect your MUSE CV system from power surges and drops. During a power outage, the UPS supplies battery power to the system long enough to let you do a system shutdown and turn off the equipment. Two versions are available, a 110 - 127 VAC, 60 Hz, 1.5 KVA unit, or a 220 - 240 VAC, 50 Hz, 1.4 KVA unit.

Compaq RAID File Server

The Compaq RAID file server features RAID Level 5, the preferred method of redundant hard drive configuration for efficient, fault-tolerant data storage. The RAID server can be supplied with or without a rack. The Compaq file server include back-up systems, redundant power supplies, fans, and NIC network integration cards. Also included with the RAID file server are: a DDS3 DAT drive for data backup and archive. The Compaq RAID server can be configured with a 2- or 4-port KVM switch for servicing “headless” clients.

NOTE

The telephone line must be an analog telephone line for communication with the host MUSE CV system to work properly. Newer digital telephone systems will not work with this equipment.

The optional UPS conditions incoming power to protect your MUSE CV system from power surges and drops. During a power outage, the UPS supplies battery power to the system long enough to let you do a system shutdown and turn off the equipment.

Desktop Workstation

The desktop workstation is based on Intel’s 233 MHz Pentium II microprocessor with passive heatsink. It comes standard with 64MB of RAM and one 2.1GB hard drive.

Synchronous Modem Module

Finally, a synchronous modem module (SMM) is available to handle your data transfer requirements. Like the workstation client, the modem module is based on Intel’s 233MHz processor. It comes standard with 64MB RAM, one 2.1GB hard drive, and a CD-ROM drive. Available as optional equipment for the comm server are:

- Network Kit (Thin, Thick, or Twisted-pair Ethernet; or Token Ring)
- MEI Multimodem
- Fax option
- CSI modem
- 1500 Defibrillator modem
- Holter Connection

Optional Equipment

The following optional equipment may be purchased with your MUSE CV system.

- Monitor - 15”, 17”, or 20”
- HP LaserJet 4050N printer *
- MUSE Network Writer (thermal printer) *
- MEI Modem *
- CSI Modem *
- MAC 8 Local Acquisition cable. *

* Not available on the file server.

Monitors

The Sony monitors are part of the Sony Multiscan series and incorporate the Trinitron display technology. The 15” monitor has a physical resolution of 1024 x 768, while the 17” and 20” monitors have a physical resolution of 1280 x 1024. All of the monitors are color.

Printers

The HP LaserJet 4050N printer contains 8MB RAM, and prints all reports including Holter, stress, echo, pacemaker, resting and hi-res ECG’s on standard paper. For additional information on this printer, please refer to the OEM manual.

The MUSE network writer is a thermal writer which allows you to print ECG’s and MUSE CV system reports on thermally-sensitive paper. It requires the Network Writer interface board be installed in the controlling computer. For additional information on the MUSE Network Writer, please refer to Chapter 6, “MUSE Network Writer Module”.

Modems

MEI modems can be added for communication with GE Marquette resting ECG analysis systems, and fax machines. They are only necessary when system components are required to communicate over telephone lines.

NOTE

The MEI modem requires analog telephone lines to communicate with other GE Marquette Medical Systems equipment. It will not work with the digital phone systems that are becoming more and more common.

Do not confuse the MEI modem, also known as the SDLC modem, with the CSI/RSS modems in the system. The MEI modem can be used to send and receive data to MAC VU, MAC 8, MAC PC, MAC 15, and MAC II resting ECG analysis systems, and can also send FAX reports to group 3-compatible FAX machines. FAX support requires the **MAC 8** local acquisition cable or network writer/local acquisition port interface pcb assembly in the controlling computer.

A CSI modem is also used for communication with MAC VU and MAC 8 resting ECG analysis systems, but in addition it lets the MUSE CV system communicate with remote workstations over standard telephone lines.

MEI Modem

The MEI modem contains 2 modems, the FAX modem and the SDLC modem. The MEI modem was designed because no off-the shelf modems did all the functions that were necessary. In addition, existing modems generated too many interrupts to the host computer, slowing the computer down too much. The MEI modem makes fewer, larger data transfers, reducing overhead for the host computer.

Versions 001A and 001B of MUSE software required the first MEI modem to be in the acquisition server/processing station and the second MEI modem to be in the file server. Starting with 001C software, both MEI modems can go into the acquisition server/processing station. For all versions of software, third and fourth MEI modems must go into an additional workstation computer that is at another node on the network.

Following are summaries of the 4 modems and the RS232 port on the MEI modem board.

- Bell 201 Modem

  The Bell 201 modem is a 2400 baud modem that will also communicate at slower rates of 1200 or 300 baud. This modem is used to communicate with GE Marquette MAC II, MAC 12, MAC 15, MAC PC, MAC PC Cellular, MAC 6, and MUSE Network products.

- Hayes “AT” Modem

  The Hayes “AT” modem communicates at 2400, 1200, or 300 baud with the MAC VU.

- FAX Modem

  FAX modem software was implemented with 002A software. This modem sends reports at 9600 baud to any group 3 FAX machine. FAXes cannot be sent from a FAX machine to the MUSE CV system.

- Voice Modem

  The voice modem provides digital voice recording and playback. There are 2 connectors for the voice modem. The first is for a standard telephone line and the second is for a headset. The voice modem will record voice messages from another telephone or a headset. The data is stored on the hard disk to be played back later.

- RS232 Serial Port

  The RS232 serial port is used with external modems. This is most useful in foreign markets, where pre-approved modems are used.

  The RS232 connector (J6) is not accessed via the computer’s back or top panel. It is an internal 10-pin connector that can be connected in 1 of 2 ways. It can either be connected to the computer’s internal COMM port, or it can be connected to an external connector found in an adjacent expansion slot.

MAC 8 Local Acquisition cable

The MAC 8 local acquisition cable is needed whenever ECGs are to be acquired locally from a MAC 8 resting ECG analysis system. It uses the MUSE Network Writer interface circuit board to communicate with the computer.

Software

The MUSE CV system is capable of acquiring data from a variety of sources, both within and outside the hospital. Data is acquired via a network, floppy diskette, direct line, or telephone transmission. Users may view and measure ECG waveforms, edit and confirm the acquired data, and create an assortment of configurable data reports.

The MUSE CV system software is a menu driven program which operates within Microsoft Windows. The overall program is divided into “applications”. Each application includes many related operations. For example, the *System Status* Application includes operations that let you display lists of errors, events, pending tasks, and print queues.

Network Functions

Computers may be networked to each other via thin, thick, or twisted pair ethernet. Every MUSE CV system comes equipped from the factory with the customer selected network interface.

TCP/IP is the standard networking protocol for the MUSE CV system.

Workstation Setup Guidelines

Workstation clients can be set up to be “turnkey” or “multi-use” depending on the user’s needs. Clients can also be set up for “MUSE Authentication” or “NT Authentication”. The terms are defined below:

Turnkey Workstation

- 16- or 32-bit systems
- Dedicated to the operation of the MUSE CV system
- Only MUSE CV system software is installed
- MUSE CV system software starts automatically when workstation starts
- Typically, additional MUSE tasks are running

Multi-Use Workstation

- 16- or 32-bit systems
- Additional third party applications may be installed.
- The MUSE CV system software does not start automatically
- Typically, does not have additional MUSE tasks running. (The user is not always running the MUSE CV system software.)

MUSE Authentication

- 16- or 32-but systems
- For Windows 95/98, the Primary Network Login must be Windows Logon.
- MUSE Login (ICIS0250.exe) provides authentication.
- Must have an NT Domain User Account for the computer to log in as. This is typically MUSEXXX (where XXX is the node id)

NT Authentication

- 32-bit systems only
- For Windows 95/98, the Primary Network Logon must be Client for Microsoft Networks.
- Provides a one-time login to all MUSE and third party resources.
- Must have an NT Domain User Account for the user.
- Must have a MUSE User account (USERS.BTR)
- Must have an entry in the MUSE NT Users database (NTUSERS.BTR) that maps the NT domain account to the corresponding MUSE User account.

Characteristics of a Turnkey Workstation

- *Minimize* is hidden system-wide and *Exit* is hidden from MUSE Login.
- Computer automatically reboots when necessary.
- 16-bit turnkey systems:
  - A **Starting MUSE** entry is added to AUTOEXEC.BAT
  - MUSE Authentication is always used.
- 32-bit turnkey systems:
  - A *Start MUSE CV* shortcut is added to the startup group.
  - MUSE Authentication is the default and in most cases it is the best choice. However, NT Authentication can be used.
  - When using NT Authentication, selecting the Exit menu will logout the user.
  - When using NT Authentication, MUSE tasks will not start until someone is logged in.

Characteristics of a Multi-Use Workstation

- *Minimize* is typically available system-wide and *Exit* is available from MUSE Login.
- Exiting MUSE returns the user to the Desktop.
- 16-bit multi-use workstations:
  - A *Start MUSE CV* icon must be added manually and the **Starting MUSE** entry must be removed from AUTOEXEC.BAT
  - MUSE Authentication is always used.
- 32-bit multi-use workstations:
  - A Start MUSE CV icon can be added to the Desktop during installation or can be run from the taskbar by selecting *Start → MUSE CV Information System → Start MUSE CV*.
  - NT Authentication is the default and in most cases it is the best choice. However, MUSE Authentication can be used.

Preparation for Use

The following interconnect diagrams give a general overview of how your workstation should be set up. There are too many variations to show all of them, but enough information should be provided so someone reasonably familiar with computer system installations should have no problem.

Step-by-step instructions for setting your workstation up for the first time can be found in the sections following the interconnect diagram. Use the interconnect diagram as a reference when following these instructions. Please refer to the supplied OEM manuals and the “System Components, Controls, Indicators, and Locations” section in this chapter for more specific information.

⚠ DANGER

Do NOT use in the presence of flammable anesthetics.

M15287-1B

⚠ WARNING

This is Class I equipment. The mains plug must be connected to an appropriate power supply.

M15287-5C

⚠ WARNING

Keep leakage current within acceptable limits when connecting auxiliary equipment to this device.

M15287-7C

⚠ WARNING

Disconnect patient from unit BEFORE connecting personal computer to unit.

M15287-12C

NOTE

MUSE CV system operation may be affected if large machines with high current draws are connected to the same electrical circuit as the MUSE CV system. It is recommended that the MUSE CV system be connected to a power source away from these machines.

Intel File Server Interconnect Diagram

The interconnect diagram below shows a typical setup for an Intel file server with SDLC modem module.

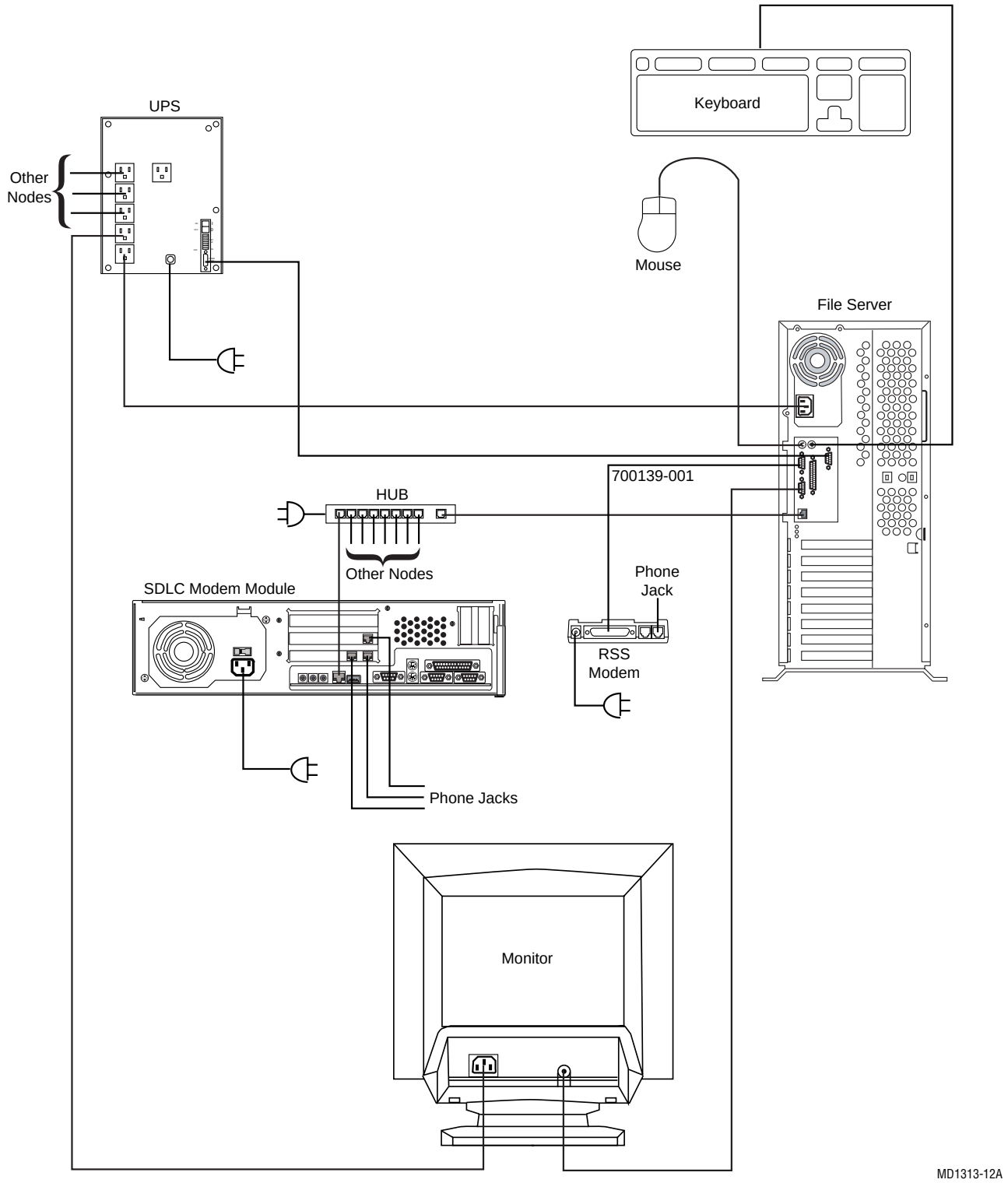

RAID File Server Interconnect Diagram

The interconnect diagram below shows a typical setup for a RAID file server.

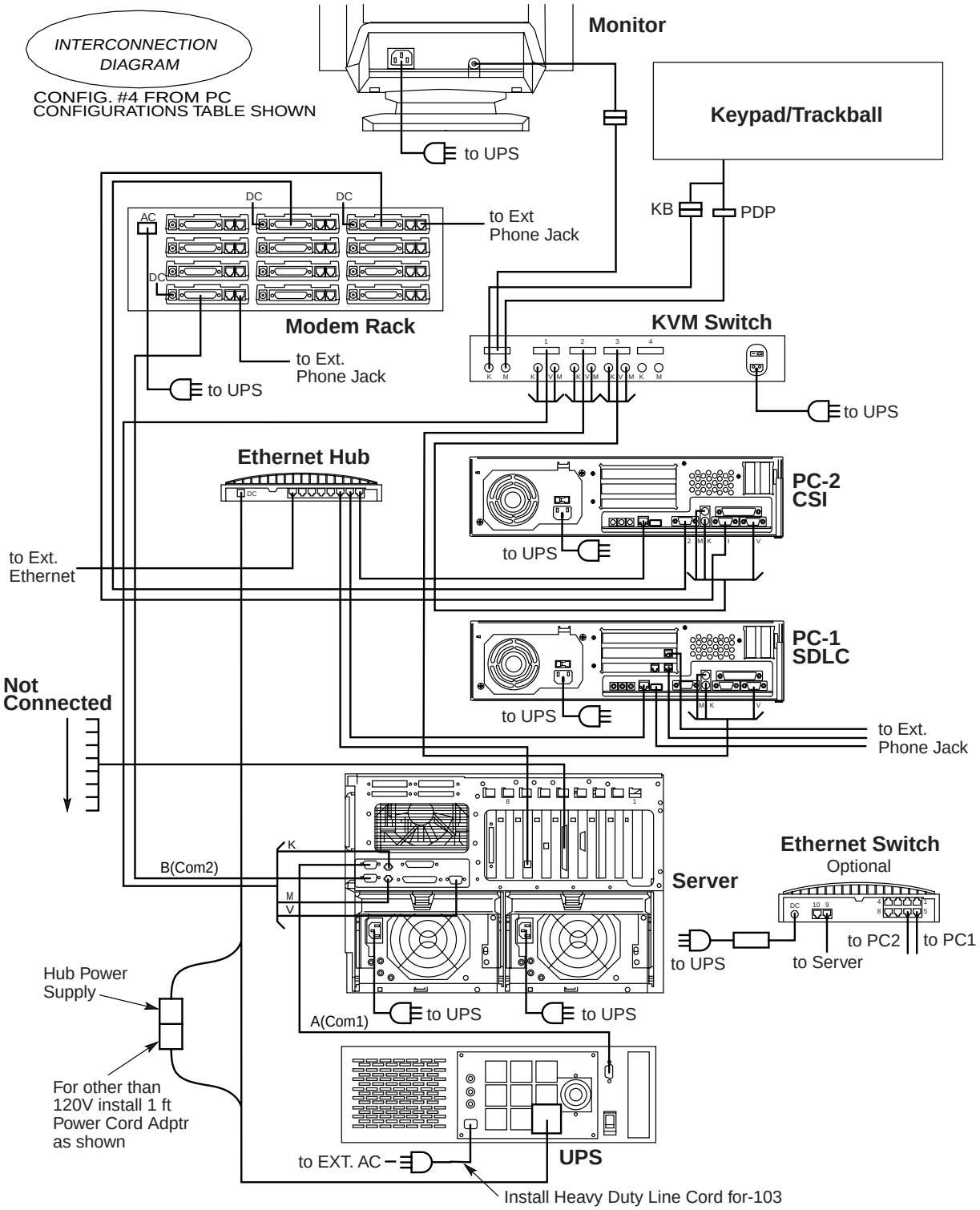

Client Interconnect Diagram

The interconnect diagram below shows a typical client setup.

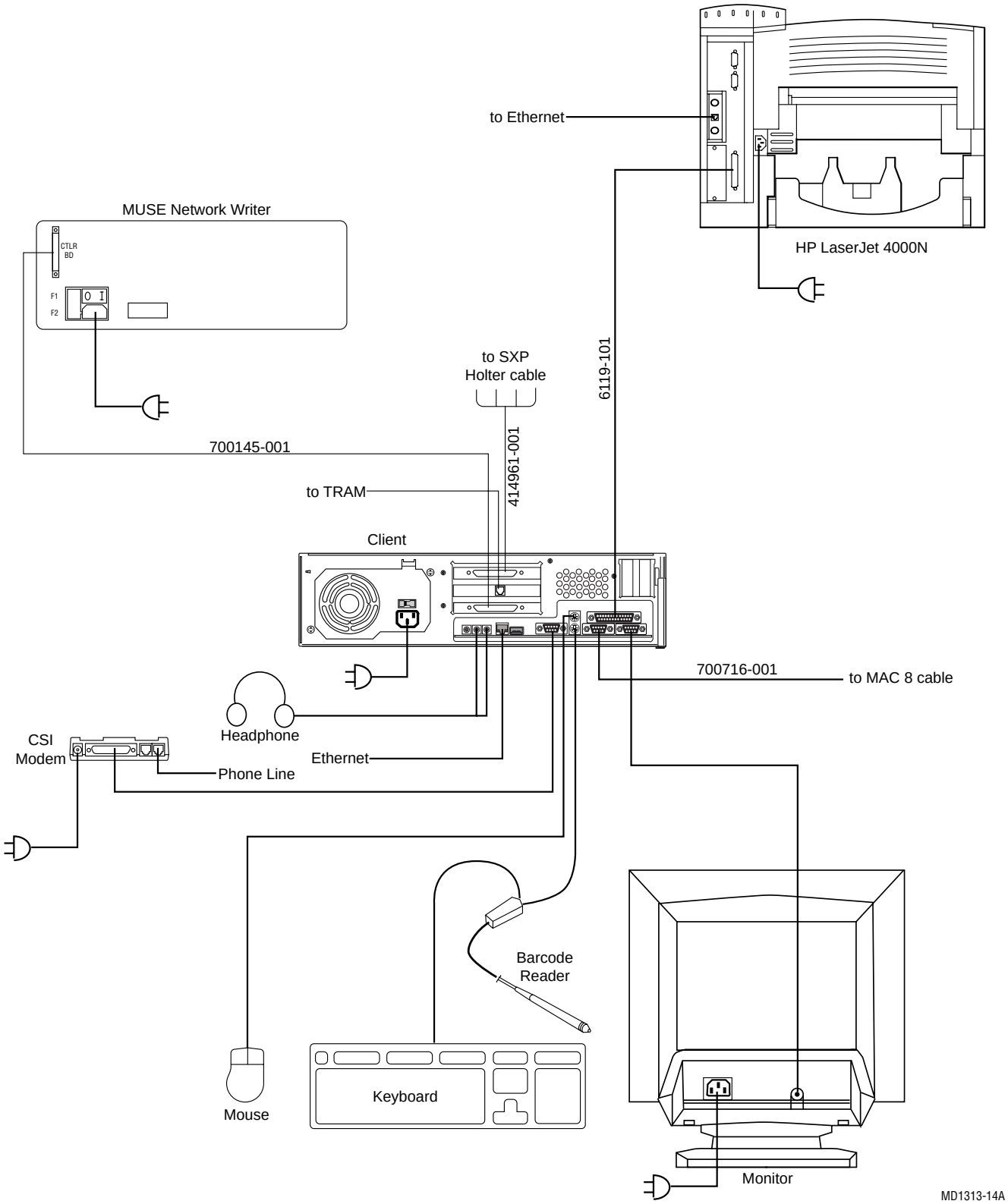

Furniture

If furniture was ordered with the MUSE CV system, unpack it and set it up in the desired location. If existing furniture is being used, ensure that it is set up in the desired location before continuing.

> **NOTE**
>
> Refer to the file server and client description diagrams in the “System Components, Controls, Indicators, and Locations” section for the recommended placement of equipment.

Uninterruptible Power Supply (UPS)

1. Unpack the UPS and place it in a location near where you plan to set up the workstation. An area on the floor and under the desk is recommended. Keep in mind that the unit needs to be accessible.
2. Ensure that the power switch on the back of the unit is in the **OFF** position.
3. Connect the UPS power cord into a 20 amp power outlet dedicated to the workstation.

   > **NOTE**
   >
   > Do not connect your laser printer to the UPS. The large periodic current draw of the printer will trigger the low voltage alarm on the UPS.

4. Connect the UPS serial cable from the UPS serial port to **COM2** on the file server.

Client

1. Unpack the system box and place it in a location near the UPS.
2. Note the location of the items on the back of the system box. You need to know where each of the controllers or connectors are to properly set up your system.

   Detailed descriptions of these items are in the original equipment manufacturer (OEM) manual you received with your system, and further defined in the “System Components, Controls, Indicators, and Locations” section in this chapter. You can also use the interconnect diagrams for locating the proper connectors.
3. Verify that the input power selection switch on the back of your system box is set correctly for your environment. The voltage visible on the switch is the voltage at which the system is set to operate.
4. Ensure the power control button, located on the front of the client hardware, is off. Also ensure that the system power enable switch on the back of the desktop server is in the off position by pressing the end marked **0**.
5. Connect the AC power cord to the AC power receptacle on the back of the system box and to one of the power outlets on the back of the UPS.

Monitor

1. Unpack the monitor and place it on the desktop. The monitor may also be placed on top of the client.
2. Verify that the power switch is in the off position.
3. Connect the AC power cord to the power receptacle on the back of the monitor and to one of the power outlets on the back of the UPS.
4. Connect one end of the video cable to the back of the monitor and connect the other end to the appropriate port on the back of the system box. Use the interconnect diagrams as a reference.

NOTE

Be sure to connect the monitor to the file server and not the modem module.

Modem Module

1. If a modem module was ordered, unpack it and place it in a location near the UPS.
2. Note the location of the items on the back of the system box. You need to know where each of the controllers or connectors are to properly set up your system.

   Detailed descriptions of these items are in the original equipment manufacturer (OEM) manual you received with your system, and further defined in the “System Components, Controls, Indicators, and Locations” section in this chapter. See “Client Interconnect Diagram” on page 2-12 for locating the proper connectors.

   NOTE

   The modem module does not use a keyboard or a monitor.

3. Ensure the power switch on the back of the unit is in the off position by pressing the end marked **0**.
4. Connect the AC power cord into the AC receptacle on the back of the system box and to one of the power outlets on the back of the UPS.

MAC 8 Acquisition Cable

If your system contains the optional MAC 8 cable, connect one end of the cable (PN 700716-001) to **COM1** on the back of the client. See the interconnect diagram for the exact location.

WARNING

Disconnect patient from unit BEFORE connecting personal computer to unit.

M15287-12C

RSS Multitech Modem

1. Unpack the modem and place it in a location near the file server.
2. Ensure that the power switch located on the side of the modem is in the off position.
3. Attach the AC power cord to the modem and to the UPS.
4. Connect one end of the RS232 cable to the **COM2** port on the back of the file server. Connect the other end to the **RS232** port on the back of the modem. Use the “Intel File Server Interconnect Diagram”as a reference.
5. Connect one end of the phone wire to the **LINE** jack on the back of the modem and connect the other end to the appropriate phone jack in the wall.

CSI Multitech Modem

1. Unpack the modem and place it in a location near the file server or the appropriate node.
2. Ensure that the power switch located on the side of the modem is in the off position.
3. Attach the AC power cord to the modem and to the UPS.
4. Connect one end of the RS232 cable to the **RS232** port on the back of the modem. Connect the other end as follows:
   - If your communication server is equipped with the MAC6/8 acquisition assembly, connect the RS232 cable to the **COM2** port on the back of the communication server.
   - If your communication server does not have the MAC6/8 acquisition assembly, then connect the RS232 cable to the **COM1** port on the back of the communication server.

     Use the “File Server Interconnect Diagram” as a reference.
5. Connect one end of the phone wire to the **LINE** jack on the back of the modem and connect the other end to the appropriate phone jack in the wall.

Keyboard and Mouse

1. Ensure the system power is off.

> **NOTE**
>
> Power should always be OFF when connecting or disconnecting the keyboard or mouse.

2. Connect the keyboard/bar code wand cable to the 6 pin keyboard port on the back of the system box and to the port on the back of the keyboard. Use the interconnect diagrams as a guide.
3. Connect the mouse cable to the 6 pin mouse port on the back of the system box. See the interconnect diagram for the exact location.

Network Connection

Thin or Thick Ethernet

If you are using thin or thick ethernet for your MUSE CV system network, connect your network cable to the appropriate port on the ethernet network card on the back of the system box.

Twisted Pair

1. If your network is twisted pair, unpack the 3Com Linkbuilder hub and place it near your system box or in the location designated by your customer's IS department.
2. Connect each system box to the network by running your twisted pair wire from the twisted pair network port on the back of the system box to a port on the hub.

   Refer to the interconnect diagrams if needed.

   If necessary, multiple hubs may be linked together to accommodate a large number of workstations.

Enterprise Network

If you are connecting to the customer's enterprise network, your system contains a "special". An RSA should be involved in the installation.

Printers

> **NOTE**
>
> Do NOT plug your laser printer into the Uninterruptible Power Supply (UPS).

HP LaserJet

1. If you are connecting the HP laser printer to your system, unpack the HP LaserJet and place it in the desired location.
2. Follow the installation instructions provided in the HP manuals which accompanied your shipment of equipment.

3. To connect your printer to the controlling computer, plug one end of the printer cable into the **PARALLEL** port on the back of the printer. Connect the other end to the **LASER PRINTER** port on the back of the system box. Use the interconnect diagram as a guide.

JAM RECOVER Setting

After connecting your printer, ensure that the *JAM RECOVER* setting is turned on.

MUSE Network Writer

1. If you are connecting the MUSE network writer to your system, unpack the printer and place it in the desired location.
2. To connect your printer to the controlling computer, plug one end of the printer cable into the **MUSE NETWORK WRITER** port on the back of the system box. Connect the other end to the **CTLR BD** port on the back of the printer. Use the File Server Interconnect Diagram as a guide.
3. Plug one end of the AC power cord into the back of the printer and the other end into an outlet on the back of the UPS.

Powering On and System Shutdown

Introduction

The section includes the following procedures:

- Powering on the workstation
- Powering off the workstation
- Exiting from MUSE CV system software to DOS

Powering On the Workstation

Power on your client as specified below. Additional information can be found in your file server's OEM manual.

1. Verify that all system components such as the monitor, keyboard, etc. are connected. All connections should be made while the system is off.

> **NOTE**
>
> If a laser printer is part of the system, do not plug it into the uninterruptible power supply (UPS). In some environments, the cycling of power in the laser printer will cause the UPS alarm to sound (approximately every minute).

2. Turn on the UPS power switch.
3. Turn on peripheral devices, monitors, and printers.
4. Turn on the power enable switch on the back of your desktop and communication servers.
5. Press the power control button on the front of your system to turn it on. The system will power up and immediately begin the power-on self test (POST).
6. Make sure the *Authorization* window appears.

> **NOTE**
>
> System shutdown procedures are described in chapter 4, "Integrated Maintenance Suite".

Checkout the Workstation

Final Checkout

Perform the following for all applicable options. Use this manual and the MUSE CV system operator's manual for reference.

1. Client Initialization - Power up all clients and ensure each initializes, error free, and you can log in.
2. Diskette Acquisition - Acquire test ECGs via electrocardiograph diskettes and ensure they plot according to report distribution.
3. Phone Acquisition - Acquire test ECGs via remote electrocardiograph modems and ensure they plot according to report distribution.
4. Local Acquisition - Acquire test ECGs via the MAC 8 acquisition cable and ensure they plot according to report distribution.
5. Holter - Locally transmit data from the Holter to the MUSE CV system.
6. TRAM Module - Test that data is successfully flowing from the TRAM to the MUSE CV system.
7. MAC LAB - Test that data can be sent from the MAC LAB to the MUSE CV system.
8. SDLC - Acquire test ECGs via remote SDLC modems.
9. CSI - Acquire test ECGs via remote CSI modems.
10. RSS - Contact Tech Support to ensure remote logon is possible.
11. Remote Query - Test CSI modem connections if system has Remote Query.
12. Edit - View and edit an ECG from the *Edit List*.
13. Writer/Printers - Test writers to ensure they plot. Check for burned out dots, especially in the bar code region.
14. FAX - FAX a record to test fax modems.
15. On-line Archives - If the system has on-line archive drives, ensure that backup tapes are up to date.
16. Backups - Perform a non-scheduled backup. See chapter 4, "Integrated Maintenance Suite" for details. Check that all tapes are being successfully used. Replace tapes that are past their intended life span (customer should store old tapes for safe keeping).

System Components, Controls, Indicators, and Locations

This section provides a description of the MUSE CV system hardware. The first diagram is a typical setup containing an Intel tower and modem module. The second diagram shows a typical setup using a client.

Intel File Server System

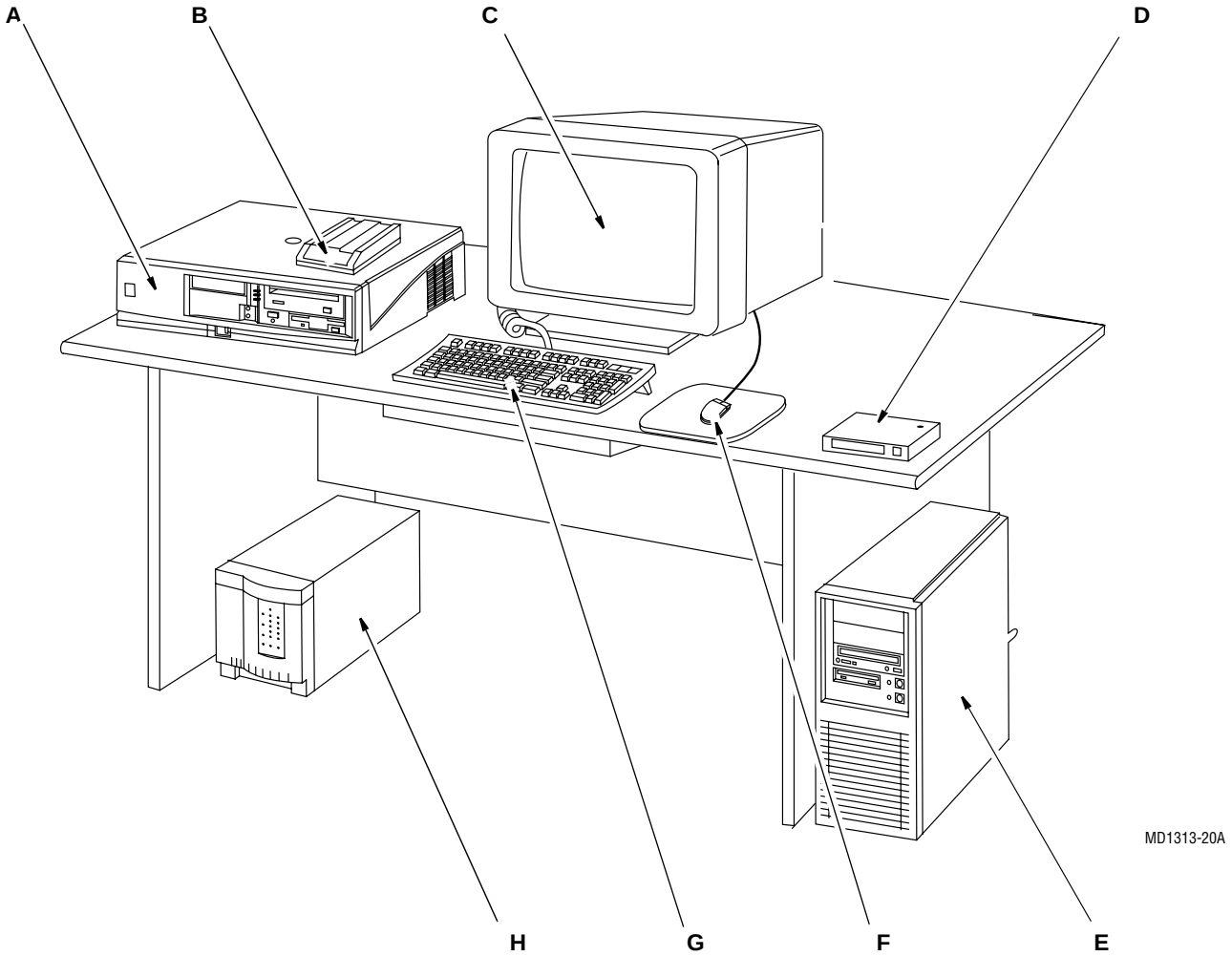

Table 2-4. Intel File Server System Description		
Item	**Name**	**Description**
A	modem module	Stores system's modems.
B	RSS modem	Used by service to provide remote system support.
C	monitor	Displays information, messages, etc.

Table 2-4. Intel File Server System Description (Continued)		
Item	**Name**	**Description**
D	Hub	Hub used in twisted pair networks. This item is optional. A MAU may be used instead for token ring networks.
E	file server	System box. Contains the power supply, hard disk drive, RAM, central processing unit, etc.
F	mouse	An input device used to move the cursor and select items on the display. The mouse is standard on the system.
G	keyboard	The keyboard is an input device. Use the keyboard to type information when required by the system.
H	UPS	The UPS automatically provides temporary power to the MUSE CV system in the event of a power interruption.

RAID File Server System

The figure below shows the RAID file server configuration in rack.

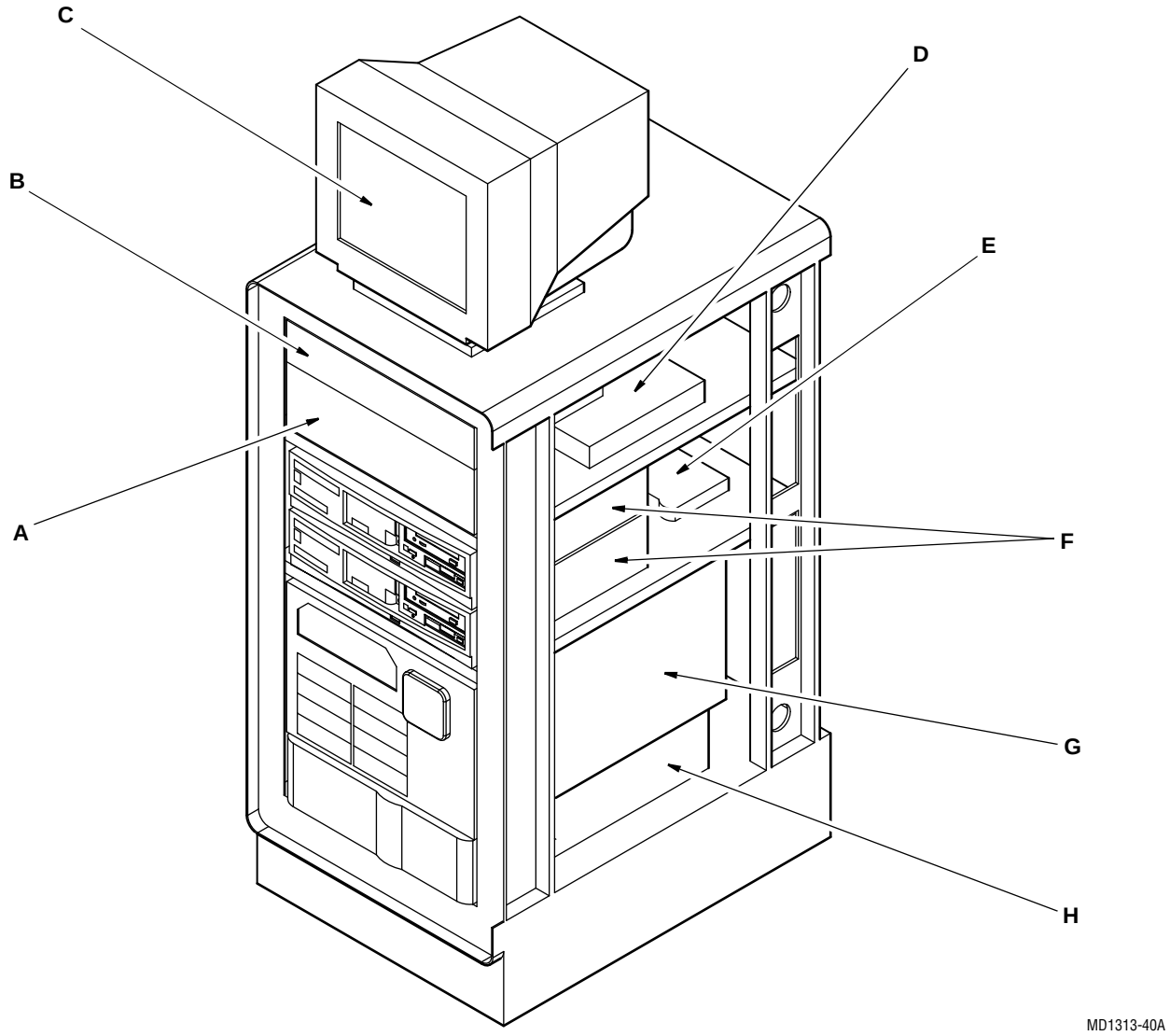

Table 2-5. RAID File Server System Description		
Item	**Name**	**Description**
A	Modem Rack	Can hold up to 12 modems.
B	Keyboard Drawer	Pulls out to allow access to the keyboard.
C	Monitor	Displays data on the screen. See the OEM manual for operational details.
D	Keyboard-Video-Monitor (KVM) switch	Used to switch between PC1, PC2, and the file server.
E	Hub	Connects PC1, PC2, and the file server to the network.

Table 2-5. RAID File Server System Description (Continued)		
Item	**Name**	**Description**
F	PC1 and PC 2	Contains CSI and/or SDLC modems.
G	File Server	Stores mirrored copies of MUSE CV system database.
H	Uninterruptible Power Supply (UPS)	Provides uninterruptible AC power in case of a power failure or power conditioning.

Workstation Client System

This section provides a description of the MUSE CV system hardware. The hardware associated with a typical workstation client configuration is shown.

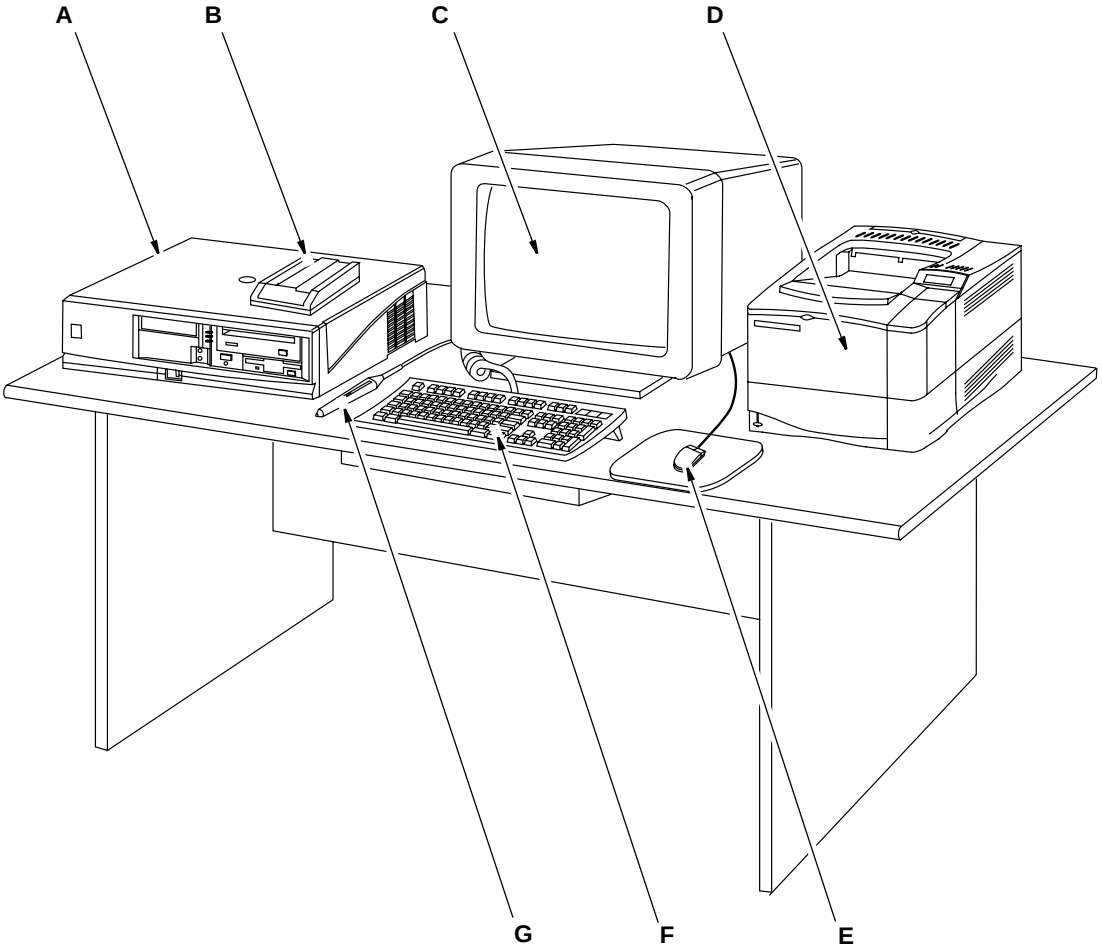

MD1313-4A

Table 2-6. Workstation Client System Description

Item	Name	Description
A	client	The system box which contains the power supply, hard disk drive, RAM, central processing unit, etc.
B	CSI modem	Used to communicate with MAC VU and MAC 8 resting ECG analysis systems.
C	monitor	Displays information, messages, reports, ECGs, etc.
D	HP LaserJet 4000N printer	Optional Laser printer used to print various reports on standard paper.
E	mouse	Input device used to move the mouse cursor and select items on the display.

Table 2-6. Workstation Client System Description (Continued)		
Item	**Name**	**Description**
F	keyboard	The keyboard is an input device. Use the keyboard to type information when required by the system.
G	bar code reader	Used to select and edit ECGs. Makes the system easier to use for those not used to working with computers.

Intel File Server- Front

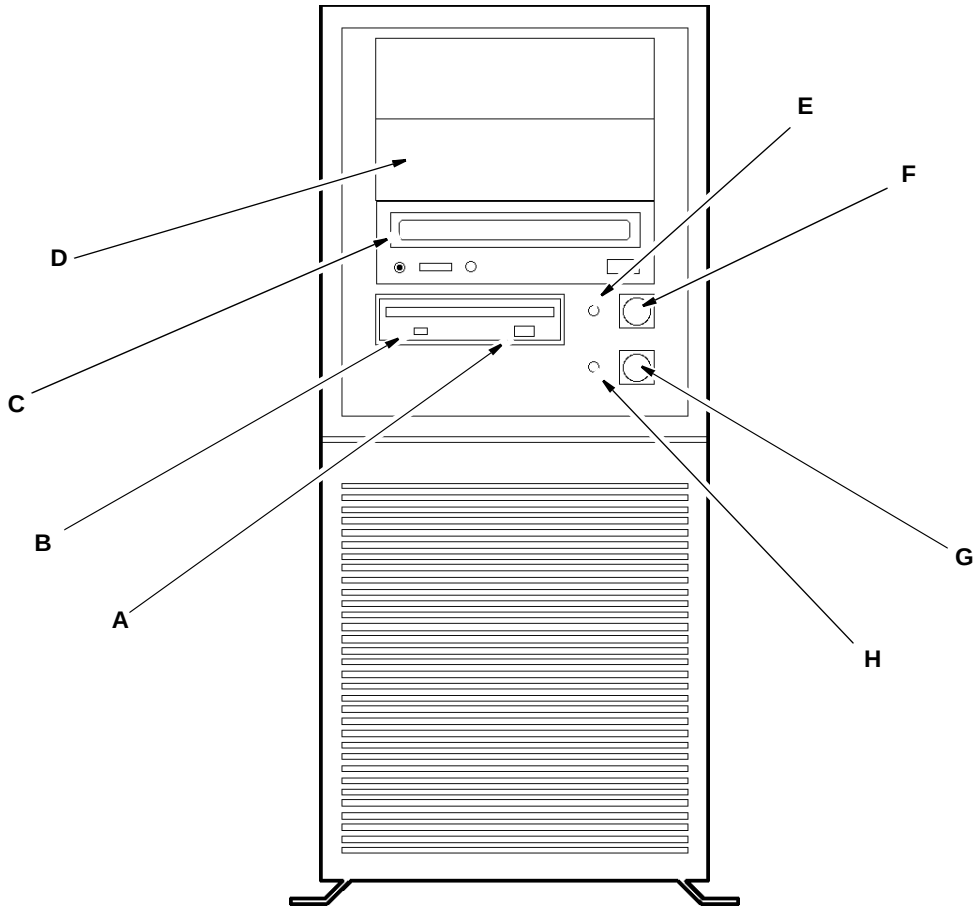

Table 2-7. File Server – Front

Item	Name	Description
A	Diskette ejector button	Press to eject diskette.
B	Diskette drive activity LED	When lit, drive is being accessed.
C	CD-ROM drive	Used to install software.
D	DAT drive	Used to backup and make archive copies of data.
E	System power on LED	When lit continuously, indicates presence of DC power in the system. LED goes out when the power is turned off or the power source is disrupted.
F	System push-button power on/ off switch	When pressed momentarily, turns the system DC power on or off. Does NOT remove AC power from the system.
G	Reset push-button switch	When pressed momentarily, resets the system and causes power-on self test (POST) to run.
H	Hard drive green LED	When lit, a SCSI or IDE hard drive is being accessed.

Intel File Server – Back

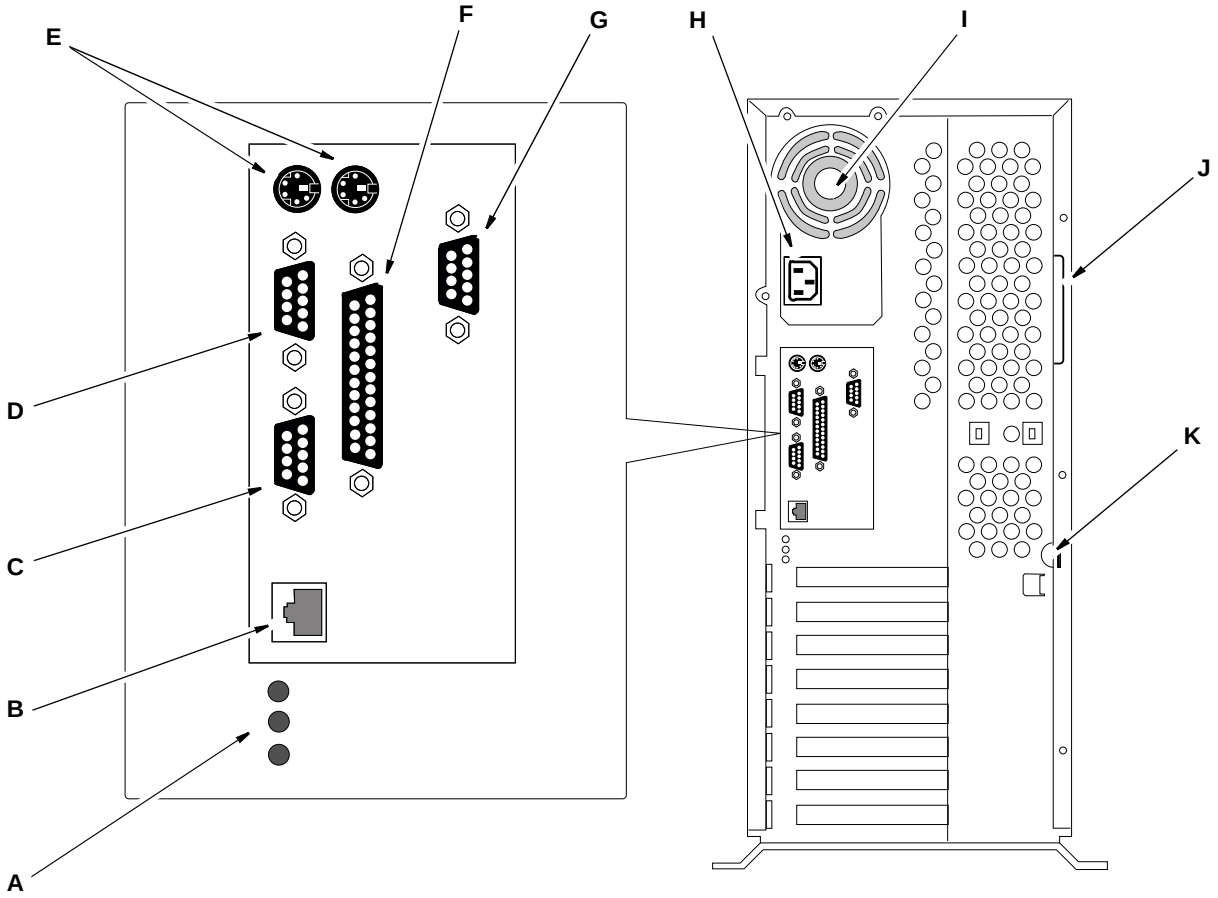

MD1313-3A

Table 2-8. File Server – Back		
Item	**Name**	**Description**
A	Network controller status LEDs	Activity, Link, and Speed of data transfer (see “File Server Network Status LEDs” for more information)
B	Network connector port	Connects to ethernet.
C	VGA monitor connector	Connects to monitor.
D	Serial port A, COM2	Connects to RSS modem.
E	Mouse and keyboard connectors	Connect to mouse and to keyboard (interchangeable).
F	Parallel port	Not used.
G	Serial port B, COM1	Connects to UPS (extended via ribbon cable from back panel to system board).
H	AC input power connector	Connects to UPS
I	Power supply fan	Provides ventilation to power supply.

Table 2-8. File Server – Back (Continued)		
Item	**Name**	**Description**
J	Side cover grip handle	Used to remove side cover when servicing file server.
K	Loop for padlock (padlock not supplied)	Install padlock for security. (Padlock not supplied)

Table 2-9. File Server Network Status LEDs		
LED	**What to Look For**	**Description**
DS3, Activity (Act)	● On, or ❋ Blinking ❍ Off	The network controller is sending or receiving data over the network. The frequency of flashes varies with the amount of network traffic. The network controller is not sending or receiving data over the network.
DS2, Link	● On ❍ Off	Valid link to the LAN: The network controller and hub are receiving power; the cable connection between the controller and hub are good. The controller and hub are not receiving power; the cable connection between the controller and hub is faulty; or there is a driver configuration problem.
DS1, Speed	● On ❍ Off	Network controller is operating at 100 Mbps transfer speed. Network controller is operating at 10 Mbps transfer speed.

Compaq File Server Rear Panel Connectors

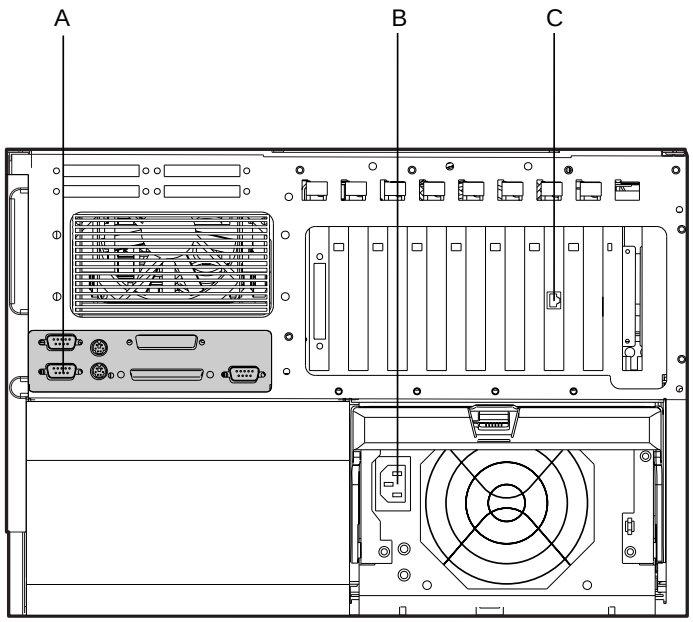

MD1313-98A

Table 2-10. ProLiant 3000 Rear Panel Connectors	
Item	**Description**
A	System I/O board rear connectors (See “System I/O Board Connectors” for more information)
B	Power supply connector.
C	Netelligent 10/100 TX UTP PCI controller connector (RJ-45)

System I/O Board Connectors

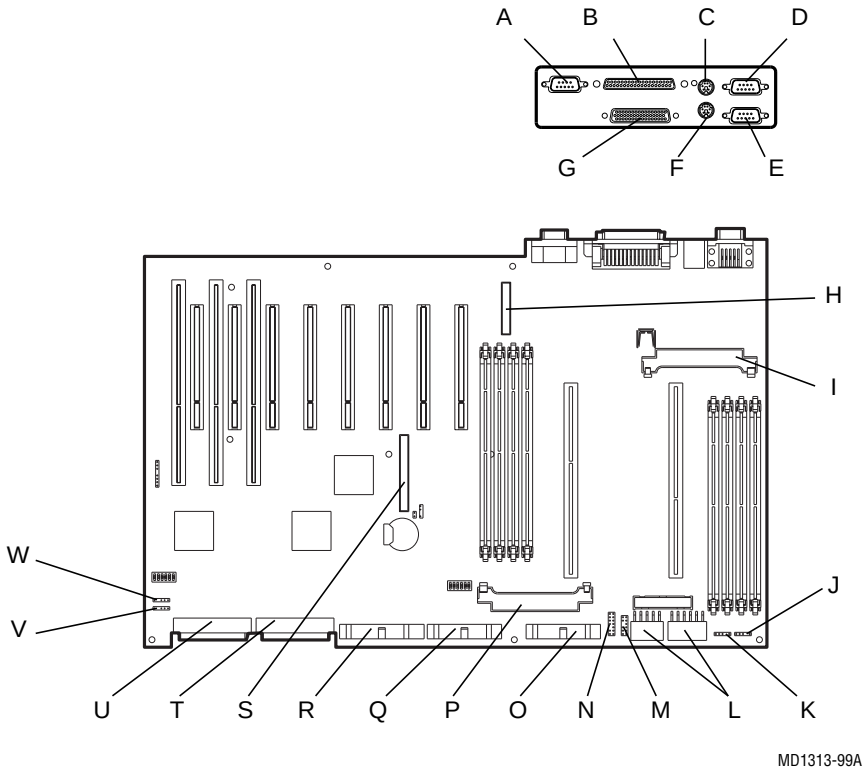

Table 2-11. ProLiant Server System I/O Board Connectors	
Item	**Description**
A	Video
B	External SCSI
C	Mouse
D	Serial Port B
E	Serial Port A
F	Keyboard
G	Parallel/Printer Port
H	Auxiliary Fan
I	Processor Power Module 1
J	CPU Redundant Fan
K	CPU Fan
L	Power
M	Power Switch
N	Power Supply
O	Integrated Management Display (IMD)

Table 2-11. ProLiant Server System I/O Board Connectors (Continued)

Item	Description
P	Processor Power Module 2
Q	Diskette Drive
R	CD-ROM Drive
S	I_2O
T	SCSI Port 2
U	SCSI Port 1
V	I/O Fan
W	I/O Redundant Fan

Client – Front

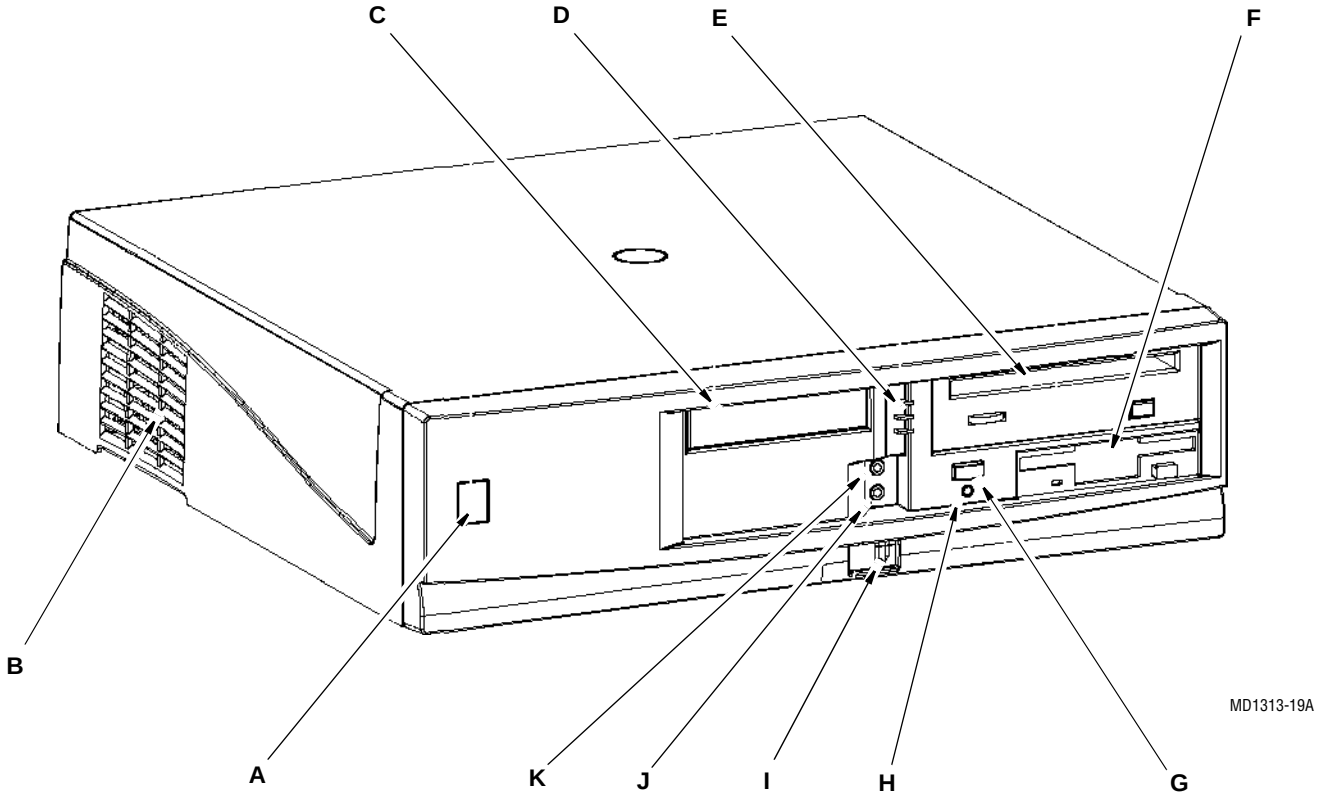

Table 2-12. Client – Front		
Item	**Name**	**Description**
A	IR filler panel	
B	Cooling vents (must not be blocked)	Used to provide ventilation to the power supply. Must not be blocked.
C	Filler panel for optional floppy disk drive bay	
D	Indicators	■ Top – power/sleep ■ Middle – hard disk activity ■ Bottom – message waiting
E	CD-ROM drive	Used to for software upgrades and for accessing technical manuals on CD-ROM. For more information see “CD-ROM Drive” on page 2-37.
F	Diskette drive	Used for software updates.
G	Power switch	Used to turn power on and off.
H	Reset button (recessed)	Used to reboot the client.
I	USB connector	Not used
J	Audio out connector	Can be used for dictation option.
K	Audio in connector	Can be used for dictation option.

Client – Back

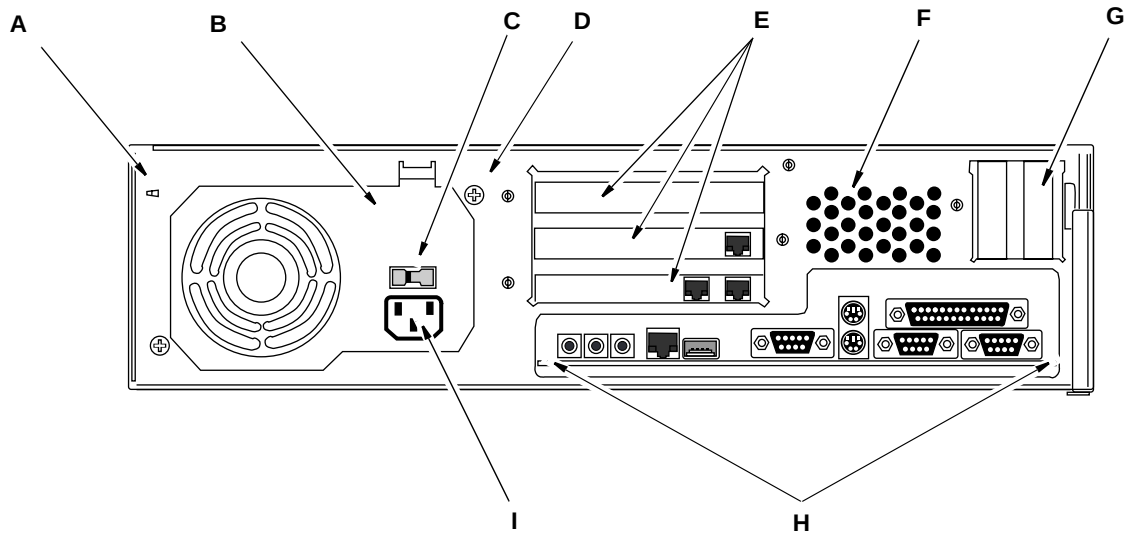

MD1313-2A

Table 2-13. Client – Back

Item	Name	Description
A	Power supply mounting tabs	
B	Power supply	
C	Power setting switch	Can be set for 115VAC or 230VAC.
D	Power supply mounting screws	Used when removing the power supply.
E	Add-in card filler panels	If client is a modem module, these panels contain telephone connectors. If client is a workstation, these panels contain connectors for MUSE Network writer, TRAM, Holter, etc.
F	Rear chassis cooling holes	Provide ventilation for power supply.
G	Connector location for accelerated graphics port (AGP) card	Not used.
H	NLX I/O motherboard back panel connectors	For more details see “NLX I/O Mother Board” on page 2-35.
I	AC power connector	Connects to AC power outlet.

NLX I/O Motherboard Back Panel Connectors

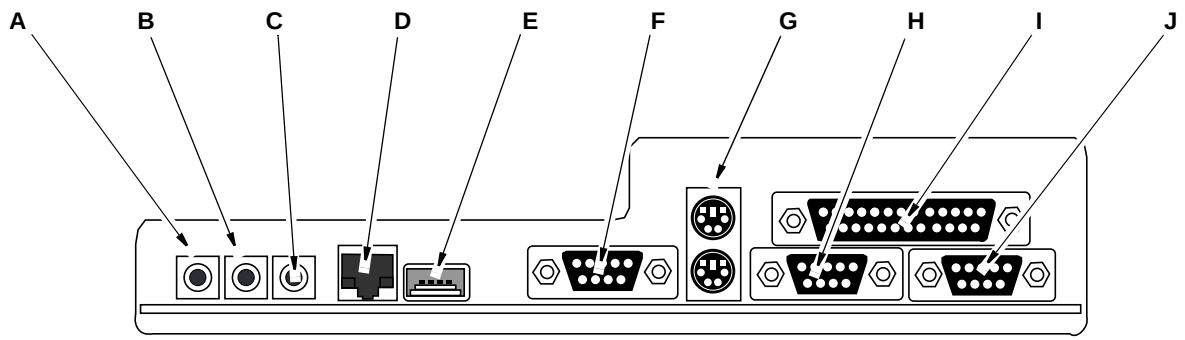

MD1313-17A

Table 2-14. NLX I/O Mother Board		
Item	**Name**	**Description**
A	Line in connector	Not used.
B	Microphone In connector	Connects to headphone (dictation option only).
C	Line Out connector	Connects to headphone (dictation option only).
D	LAN connector	Connects to ethernet.
E	Universal Serial Bus (USB) connector	Not used.
F	Serial Port 2 connector	Connects to CSI modem.
G	Mouse/keyboard connectors	Connect to mouse and to bar code reader.
H	Serial Port 1 connector	Connects to MAC 8 resting ECG analysis system for local acquisition of ECGs.
I	Parallel port	Connects to HP LaserJet printer.
J	Video connector	Connects to monitor.

DAT Drive

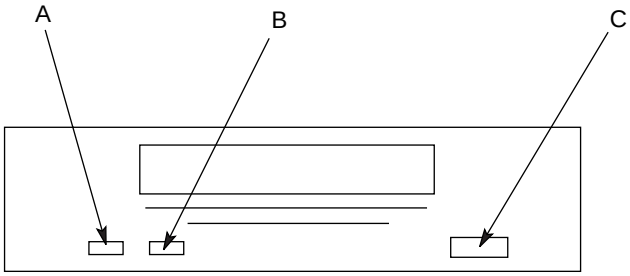

MD1313-9A

Table 2-15. DAT Drive		
Item	**Name**	**Description**
A	tape light	See “DAT Tape Drive Front Panel Display” below.
B	clean/attention light	See “DAT Tape Drive Front Panel Display” below.
C	unload button	Press to remove DAT tape.

DAT Tape Drive Front Panel Display

The **Tape** light (left) uses green to show tape activity as follows:

- Slow flashing green while the tape is being loaded or unloaded.
- Steady green when the tape is loaded.
- Fast flashing green when read or write operations occur.

The **Clean / Attention** light (right) uses amber to show the following conditions:

- Slow flashing amber to indicate that the heads need cleaning or the cartridge is near the end of its useful life.
- Steady amber to indicate a hard fault.

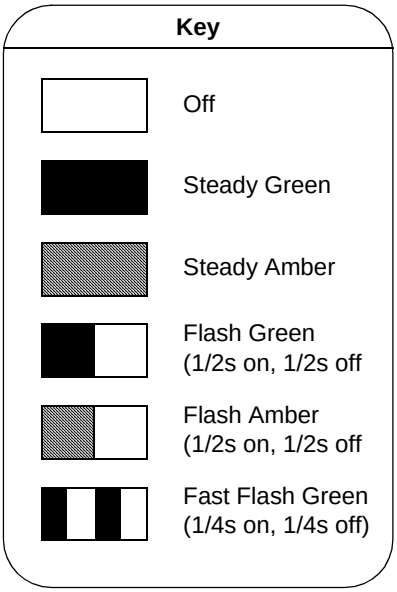

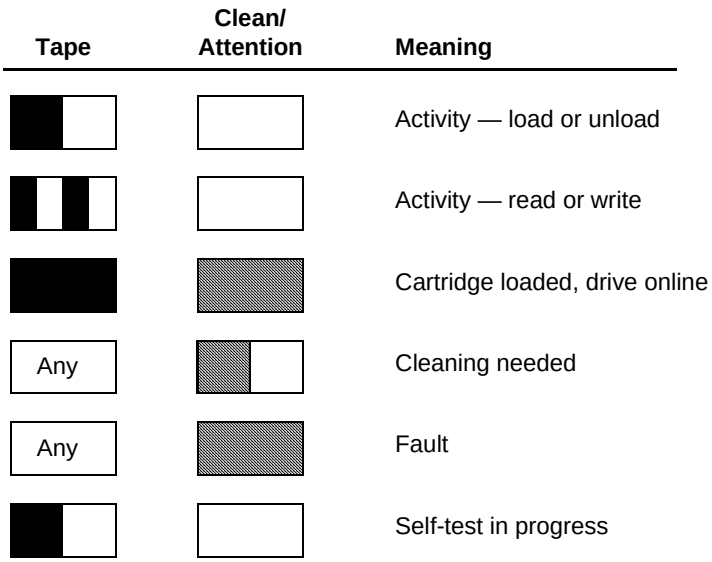

CD-ROM Drive

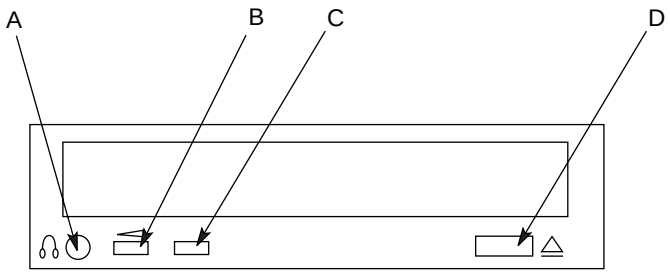

MD1313-10A

Table 2-16. CD-ROM Drive		
Item	**Name**	**Description**
A	headphone connector	Connect headphones here.
B	variable control dial	Use to vary CD volume.
C	LED	Light indicates CD-ROM drive activity.
D	eject button	Press to remove CD-ROM.

3 Installation

Intel File Server Installation 3-3
Back Up and Shut Down the System (Upgrades Only) 3-3
Connect File Server 3-3
Configure TCP/IP 3-4
Adding the MUSE System File Server to the Hospital Domain (Member Server Only) 3-6
Create MUSE NT Domain Accounts 3-7
Create User Accounts Using CVUSER 3-7
Create User Accounts Using User Manager for Domains 3-8
Updating MUSE File Server Local Groups 3-10
Add Users to the Local Administrators Group 3-10
Add Users to the Local MUSE Users Group 3-10
Configuring User Options 3-11
Set the *Taskbar* options. 3-11
Updating User Account for MUSE Services 3-12
Configuring IMS 3-12
Install Network Printing 3-13
Defining a New MUSE CV System User 3-14
Defining a Windows NT User Account 3-14
Creating User Accounts Using CVUSER 3-14
Creating User Accounts Using User Manager for Domains 3-15
Create the MUSEAdmin User Account 3-15
Create the MUSEBkgnd User Account 3-15
Create User Accounts for MUSE Nodes 3-16
Adding Windows NT User Accounts to Windows NT Local Groups .. 3-16
Add Users to the Local Administrators Group 3-16
Add Users to the Local MUSE Users Group 3-17
Adding a User to the MUSE CV System 3-18
Mapping a Windows NT User to a MUSE CV System User 3-18
Windows NT Domain Trusts (PDCs Only) 3-19
Trusting of Hospital Domain(s) by the MUSE Domain 3-19
Trusting of the MUSE by Hospital Domain(s) 3-20
Verifying Network Setup (Win 95 Clients) 3-21
Verifying Network Setups (WFW Clients) 3-22
Installing Windows NT Server 4.0 Service Pack 4 3-24
Creating an Emergency Repair Disk 3-25
Merging Residual Data into the Database 3-25

Installing Network Printers 3-26
Introduction 3-26

Configuring a MMS Network Printer 3-27
Before You Begin 3-27
Set Up The Printer 3-27
Printout of Printer's Configuration 3-28
Configuring MUSE CV System to Print to Printers Shared by the Server 3-28
Configuring MUSE CV System to Print to Novell Shared Printers 3-30
Activating the Gateway 3-30
Configuring Peer to Peer Printers 3-31
Windows NT 3-31
Windows 95 3-32
Windows for Workgroups 3-32
Troubleshooting 3-33
MUSE CV Checkout 3-33
Connectivity to the Printer 3-33
MUSE CV System Errors 3-34

Defining a New MUSE CV System User 3-35
Introduction 3-35
Defining a Windows NT User Account 3-35
Creating User Accounts Using CVUSER 3-35
Creating User Accounts Using User Manager for Domains 3-36
Create the MUSEAdmin User Account 3-36
Create the MUSEBkgnd User Account 3-37
Create User Accounts for MUSE Nodes 3-37
Adding Windows NT User Accounts to Windows NT Local Groups .. 3-37
Add Users to the Local Administrators Group 3-37
Add Users to the Local MUSE Users Group 3-38
Adding a User to the MUSE CV System 3-39
Mapping a Windows NT User to a MUSE CV System User 3-40
Windows NT Domain Trusts (PDCs Only) 3-41
Trusting of Hospital Domain(s) by the MUSE Domain 3-41
Trusting of the MUSE by Hospital Domain(s) 3-42

Adjusting Fmtopts.xxx Print Settings 3-43
Change the Font 3-44
Change the Font Modifier 3-44
Change Sizes 3-44
General Rules for Editing Fmtopts.xxx Files 3-45

Intel File Server Installation

Back Up and Shut Down the System (Upgrades Only)

1. If this is a forklift upgrade, do a non-scheduled complete backup of the file server you are about to replace. See the “MUSE CV Information System Operator’s Manual” for information on how to perform a non-scheduled complete backup.
2. After the backup, shut down the system as described in the “MUSE CV Information System Field Service Manual”.

Connect File Server

Connect the new file server to other components as shown below.

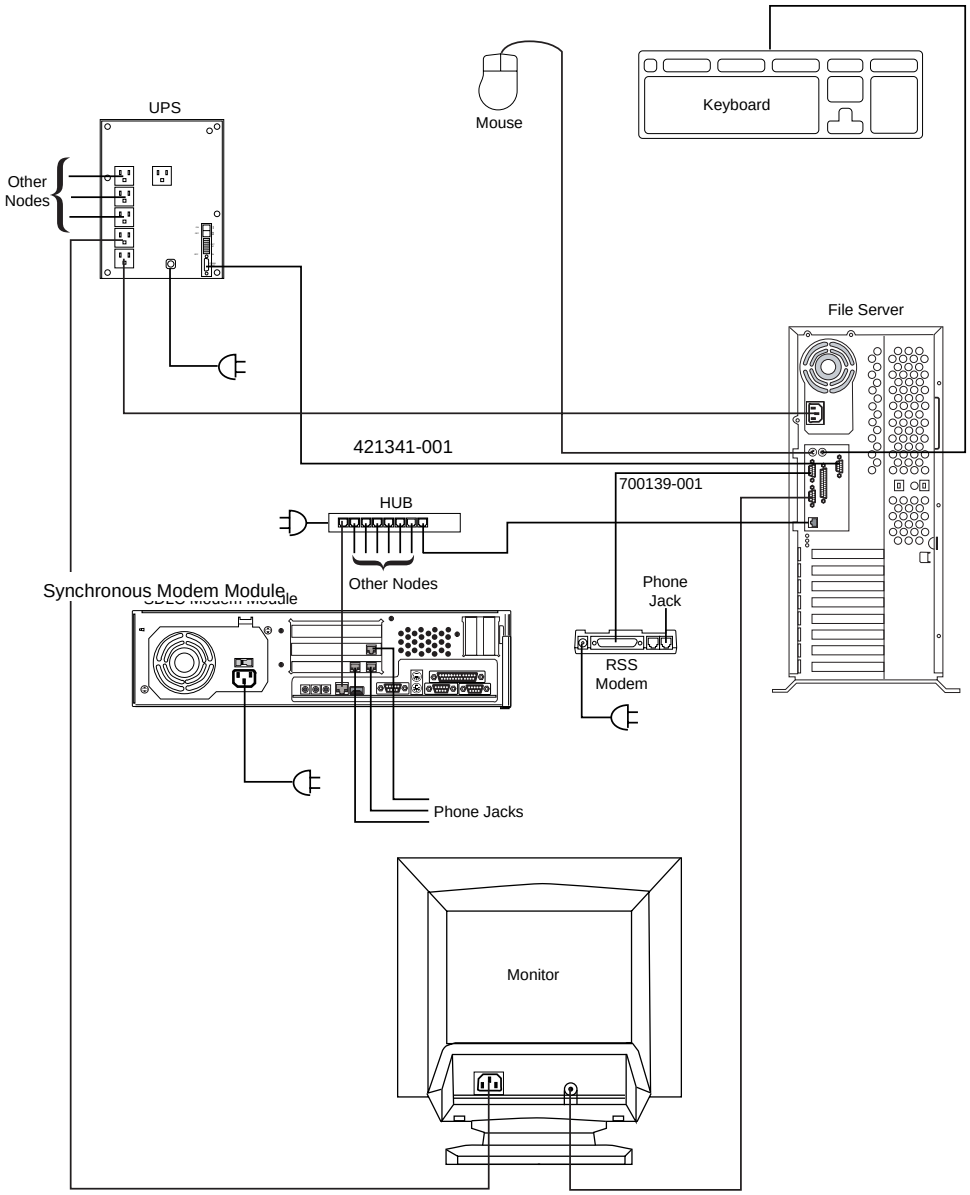

Telephone Cables (PN 80159-014)
Twisted Pair Cables (PN 408997-001)

MD1313-12A

Configure TCP/IP

1. If the MUSE CV Information System file server is a primary domain controller (PDC), login to the domain using the MUSEAdmin account.
   - *User name* = **Muse Admin**
   - *Password* = **Muse!Admin**

   If it is a member server in an existing hospital domain, login locally to file server using the Administrator account.
   - *User name* = **Administrator**
   - *Password* = **Never!Mind**

   NOTE

   To log into the MUSE CV Information System file server locally when it is a member server in an existing hospital domain, make sure the computer name (ie. MUSE$$$001) is highlighted in the domain box of the logon screen. If the MUSE CV Information System file server is a primary domain controller, logging into the domain is the only option. Keep this in mind when future steps require logging in locally to the MUSE CV Information System file server or logging in to the domain.

2. Select *Start* → *Settings* → *Control Panel*.
3. Double click the *Network* icon.
4. Select the *Protocols* tab.
5. Highlight *TCP/IP Protocol*. Then, select the *Properties...* button.
6. Verify that the *Specify an IP Address* radio button is selected.
7. Enter the *IP Address, Subnet Mask,* and *Default Gateway*.

   NOTE

   If no additional gateways exist, skip to step 12. Otherwise, continue with step 8.

8. Select the *Advanced...* button.
9. Select the *Add...* button under the *Gateways* list.
10. Enter the *IP Address* of the gateway and select the *Add* button. Repeat this step as needed for additional gateways.
11. Select the *OK* button in the *Advanced IP Addressing* dialog box.

    NOTE

    If no DNS servers exist, skip to step15. Otherwise, continue with step 12.

12. Select the *DNS* tab.
13. Select *Add* for *DNS Service Search Order*.
14. Enter the *IP address* of the *DNS Server* and select *Add*. Repeat this step as needed.

> **NOTE**
>
> If no WINS Servers exist, proceed to step 19. Otherwise, continue with step 15.

15. Select the *WINS Address* tab.
16. Enter the IP address of the *Primary WINS Server*.
17. Enter the IP address of the *Secondary WINS Server* if one exists.
18. Verify that the *Enable DNS for Windows Resolution* box is unchecked unless you are told to check it by the network administrator.
19. Verify that the *Enable LMHOSTS Lookup* box contains a check mark.
20. Select *Close* at the bottom of the *Network* dialog box.
21. Select *Yes* when asked *Do you want to restart you computer now?*

> **NOTE**
>
> If DNS or WINS is being used, if the MUSE file server is a PDC, or if the MUSE file server is on the same subnet as a domain controller, TCP/IP configuration is complete. Otherwise, continue with step 22.

22. Edit the lmhosts file in C:\winnt\system32\drivers\etc. Create an entry for the PDC in the domain the MUSE file server will be joining. Be sure to use the **DOM** and **PRE** switches. Look at the sample file **lmhosts.sam** for an example.

> **NOTE**
>
> If the MUSE file server is a member server, continue with “Adding the MUSE System File Server to the Hospital Domain (Member Server Only)”.
>
> If the MUSE system file server is a PDC, go to “Configuring Email Notification of the IMS Log”.

Adding the MUSE System File Server to the Hospital Domain (Member Server Only)

1. Log on to the MUSE CV system file server as Administrator.
   - User name = **administrator** (name is not case sensitive)
   - Password = **Never!Mind** (Password IS case sensitive)
2. Select *Start* → *Settings* → *Control Panel*.
3. Double click the *Network* icon.
4. Select the *Identification* tab. Then, select the *Change...* button.
5. Verify that the *Domain* radio button is selected.
6. Enter the name of the domain to join.
7. Verify that the *Create a Computer Account in the Domain* box is checked.
8. Enter the *User Name* and *Password* of an account with the ability to add a computer to the domain and select *OK*.

NOTE

An account with the ability to add a computer to a domain is typically a domain administrator account. Someone from the IS department will have to enter the User *Name* and *Password* unless they are willing to give this information to Marquette personnel.

9. At the *Are you sure you want to move this computer...* message select *Yes*.
10. At the domain welcome message select *OK*.
11. Select *Close*.
12. Select *Yes* when asked *Do you want to restart your computer now?*

Create MUSE NT Domain Accounts

Next, create a MUSE NT domain account. This can be done by using the cvuser utility described in “Create User Accounts Using CVUSER” or by using User Manager for Domains as described in “Create User Accounts Using User Manager for Domains”. Either method can be used.

Create User Accounts Using CVUSER

NOTE

The user/names used here are the Marquette suggested user/names

If other user/names are required by the customer, use them in place of the suggested names. Inform Tech Support if different user/names are used.

If using customer required user/names in place of the suggested user names, remember to use these names for the remainder of the instructions.

1. Login to the domain using a domain administrator account.

NOTE

IS department personnel will do this unless they are willing to give out the user name and password for a domain administrator account.

2. Select *Start* → *Programs* → *Command Prompt*.

NOTE

The cvuser utility exists in the c:\mei directory of the MUSE CV Information System file server. If cvuser is run from the MUSE CV Information System file server, the MUSE$$$001 parameter is not required in the following steps.

3. Type **cvuser** <**Space**> **MUSEAdmin** <**Space**> **MUSE$$$001** (**MUSE$$$001** is the computer name of the MUSE CV system file server)
4. Type **cvuser** <**Space**> **MUSEBkgnd** <**Space**> **MUSE$$$001** (**MUSE$$$001** is the computer name of the MUSE CV system file server)

5. Type **cvuser** <**Space**> **MUSEXXX** <**Space**> **MUSE$$$001** (**MUSEXXX** corresponds to the computer name of all MUSE nodes except for the file server)

> **NOTE**
>
> The cvuser utility will create new user accounts in the domain as well as place newly created user accounts into the local MUSE Users group on the MUSE CV system file server.
>
> The MUSEAdmin and MUSEBkgnd accounts will also be placed in the local Administrators group on the MUSE CV Information System file server. Therefore if using the cvuser utility, skip "Updating MUSE File Server Local Groups" and go directly to "Configuring User Options" on page 3-11.

Create User Accounts Using User Manager for Domains

> **NOTE**
>
> The user/names used here are the Marquette suggested user/names
>
> If other user/names are required by the customer, use them in place of the suggested names. Inform Tech Support if different user/names are used.
>
> If using customer required user/names in place of the suggested user names, remember to use these names for the remainder of the instructions.

1. Log in to the domain using a domain administrator account.
2. Select *Start* → *Programs* → *Administrative Tools* → *User Manager for Domains*.
3. Select *User* → *New User*.

Create the MUSEAdmin User Account

1. Enter User Name **MUSEAdmin**.
2. Enter Full Name **MUSEAdmin**.
3. Enter Description **MUSE CV Information System Administrator**.
4. Enter Password **Muse!Admin**.
5. Confirm the Password.
6. Uncheck the *User Must Change Password at Next Logon* box.
7. Check the *Password Never Expires* box.

8. Select *Add*.

Create the MUSEBkgnd User Account

1. Enter User Name **MUSEBkgnd**.
2. Enter Full Name **MUSEBkgnd**.
3. Enter Description **MUSE CV Information System Background Task**.
4. Enter Password **Muse!Bkgnd**.
5. Confirm the *Password*.
6. Uncheck the *User Must Change Password at Next Logon* box.
7. Check the *Password Never Expires* box.
8. Select *Add*.

Create User Accounts for MUSE CV Information System Nodes

1. Enter User Name **MUSEXXX** (where XXX corresponds to a MUSE node id).
2. Enter Full Name **MUSEXXX** (where XXX corresponds to a MUSE node id).
3. Enter Description **MUSE CV Information System User**.
4. Enter Password **Muse!XXX** (where XXX corresponds to a MUSE node id).
5. Confirm the *Password*.
6. Uncheck the *User Must Change Password at Next Logon* box.
7. Check the *Password Never Expires* box.
8. Select *Add*.

Updating MUSE File Server Local Groups

1. Log on to the MUSE CV system file server as MUSEAdmin.
   - User name = **museadmin** (name is not case sensitive)
   - Password = **Muse!Admin** (Password IS case sensitive)
2. Select *Start* → *Programs* → *Administrative Tools* → *User Manager for Domains*.

Add Users to the Local Administrators Group

1. Double click on the *Administrators* group.
2. Select *Add*.
3. Verify that the domain name is highlighted in the *List Names From* box. Select it if it is not highlighted.
4. Highlight the *MuseAdmin* account and select *Add*.
5. Highlight the *MuseBkgnd* account and select *Add*.
6. Select *OK*.
7. Select *OK* at the *Local Group Properties* dialog box.

Add Users to the Local MUSE Users Group

1. Double click the *MUSE Users* group in the *Group* list.
2. Select *Add*.
3. Verify that the domain name is highlighted in the *List Names From* box. Select it if it is not highlighted.
4. Highlight the *MuseAdmin* account and select *Add*.
5. Repeat step 4 for *MuseBkgnd* and all *Musexxx* accounts where xxx is the MUSE node id.
6. Select *OK*.
7. Select *OK* in the *Local Group Properties* dialog box.
8. Select *User* → *Exit* to exit *User Manager for Domains*.

Configuring User Options

1. Log in to the domain as MuseAdmin with the case sensitive password Muse!Admin
2. At the *Welcome to Windows NT* screen select *Close*.

> **NOTE**
>
> The second time logging into the domain as MUSEAdmin, there will be a checkbox labeled *Show this Welcome Screen…* message. Uncheck the box so the message will not appear any more.

3. Move the *My Briefcase* folder to the *Recycle Bin*.

Set the *Taskbar* options.

1. Select *Start* → *Settings* → *Taskbar*….
2. Select *Always on top*.
3. Select *Show small icons in Start menu*.
4. Select *Show clock*.
5. Select *OK* to exit.

Set the *Screen Saver*

1. Right click on the desktop, select *Properties*.
2. Select the *Screen Saver* tab.
3. Select the *Logon Screen Saver*.
4. Check *Password Protected*.
5. Set the *Timeout* to 15 minutes.
6. Select *OK* to exit.

Set the *Command Prompt* options:

1. Select *Start* → *Settings* → *Control Panel* → *Console*.
2. Select the *Options* tab.
3. Select *Large* for the *Cursor Size*.
4. Select the *Layout* tab.
5. Enter **80** for the *Screen Buffer Width*.
6. Enter **50** for the *Screen Buffer Height*.
7. Enter **80** for the *Window Width*.
8. Enter **50** for the *Window Height*.
9. Select *OK* to exit.

Set the Explorer Options

1. Double click *My Computer*.
2. Select *View* → *Toolbar*.

3. Select *View* → *Options*.
4. Select Browse folders by using a single window that changes as you open each folder.
5. Select the *View* tab.
6. Select *Show all files*.
7. Select *Display the full path in the title bar*.
8. Deselect Hide file extensions for known file types.
9. Select Display compressed files and folders with alternate color.
10. Select *OK* to exit.

Updating User Account for MUSE Services

1. Log on to the domain using the MUSEAdmin account.
2. Select *Start* → *Programs* → *Command Prompt*.
3. Type:

   cvsinst <**Space**> **Hospitaldomain\MUSEBkgnd Muse!Bkgnd d:\vol000\system\sysinf\services.asc**

   (where "Hospitaldomain" is the domain that the MUSE CV system is a member of)
4. Type **exit** and press **Enter** to close the *Command Prompt* window.

Configuring IMS

Updating the User Account for IMS

1. Select *Start* → *Run*.
2. Type **dcomcnfg** and click *OK*.
3. In the *Distributed COM Configuration Properties* application list, choose *MUSE-CV IMS Cserver* and select *Properties...* .
4. Select the *Identity* tab.
5. Verify that the *This User* radio button is selected.
6. Type **Hospitaldomain\MUSEBkgnd** in the *User* field where Hospitaldomain is the hospital domain to which the MUSE system belongs.
7. Type **Muse!Bkgnd** for *Password* and *Confirm Password*.
8. Select *OK*.
9. At the *Distributed COM Configuration Properties* dialog box, select *OK*.

Configuring Email Notification of the IMS Log

If the user wants the IMS_RPT.LOG file emailed, configure the log file reporting mechanism.

1. Install the temporary IMS Email support utility BLAT.EXE. **BLAT.EXE – INSTALL** <**smtp address**>, where smtp is replaced by the site's email server.
2. Uncomment and modify the IMSRPT.BAT file's BLAT.EXE entry.
   - The -i parameter should be the name of your server.
   - The -f parameter should be the Email address of the primary technician.
   - Use the -t parameter to include all of the addresses of users that should receive a copy of the IMS summary file.
   - For example: blat %1\ims_rpt_%2.log -s "MUSE-IMS %2" -i MUSESTJ001 -f joe.smith@diageng.mei.com -t john.brown@diageng.mei.com, mary.kline@diageng.mei.com

     In this example, the from field in the Email message is the MUSE CV Information System file server named MUSESTJ001. The user account of the sender is the primary tech, Joe Smith. The Email message is sent to John Brown and Mary Kline.

Configuring Nightly Auto Run Time

1. Select *Start* → *Run*.
2. Type **cvis0122** and select *OK*.
3. Select *Set Auto Run Time...* from the *System* menu.
4. Using the WinAt application, right click in the white client area. Add the command **cvis0122 -autorun** and set the hour of operation. Exit the WinAt application.
5. Exit MUSE-IMS.

Install Network Printing

If the MUSE CV system has a network printer, install it at this time. See "Installing Network Printers" for details.

Defining a New MUSE CV System User

Defining users of the MUSE CV system is a four-part process.

- Define an NT user account
- Include the NT user account into an NT local group called MUSE Users on the MUSE CV system file server.
- The user must also be defined within the MUSE CV system application. (This is no different from how users were defined in pre-Windows NT versions of the MUSE system.)
- Map a Windows NT user account to a MUSE CV system account.

Defining a Windows NT User Account

Windows NT user accounts for the MUSE CV system should be domain accounts. These accounts must be created by someone who has the ability to add users to the domain. This is typically done by a domain administrator. If the MUSE CV system file server is its own primary domain controller, the Administrator account or the MUSEAdmin account (if it exists) should be used to create new domain accounts. If the MUSE CV system file server is a member server in an existing hospital domain, someone from the hospital IS department who can log on as a domain administrator must create the new accounts.

The procedures below explain how to create the required MUSE CV system Windows NT user accounts. The preferred and easier way to create the accounts is to use the cvuser utility found in the c:\mei directory of the MUSE CV system file server. User Manager for Domains can also be used to manually create the accounts. Hospital IS department personnel will also create NT user accounts for hospital personnel that will use the MUSE CV system. These accounts will not be created using the steps below. They will be created in the way the hospital normally creates Windows NT user accounts.

Creating User Accounts Using CVUSER

1. Login to the domain using a domain administrator account.

   NOTE

   IS department personnel will do this unless they are willing to give out the user name and password for a domain administrator account.

2. Select *Start* → *Programs* → *Command Prompt*.
3. Type **cvuser** <**Space**> **MUSEAdmin** <**Space**> **MUSE$$$001** (where **$$$** is a three character abbreviation for the customer name and **MUSE$$$001** is the computer name of the MUSE CV system file server).

   NOTE

   The cvuser utility exists in the c:\mei directory of the MUSE CV system file server. If cvuser is run from the MUSE CV system file server, the MUSE$$$001 parameter is not required.

4. Type **cvuser** <**Space**> **MUSEBkgnd** <**Space**> **MUSE$$$001**

5. Type **cvuser** <**Space**> **MUSEXXX** <**Space**> **MUSE$$$001** (where **XXX** corresponds to a MUSE node id).

> **NOTE**
>
> The cvuser utility will place new newly created user accounts into the local MUSE Users group on the MUSE CV system file server. The MUSEAdmin and MUSEBkgnd accounts will also be placed in the local Administrators group on the MUSE CV system file server. Therefore if using the cvuser utility, skip “Adding Windows NT User Accounts to Windows NT Local Groups” and go directly to “Adding a User to the MUSE CV System”.

Creating User Accounts Using User Manager for Domains

1. Log in to the domain using a domain administrator account.
2. Select *Start* → *Programs* → *Administrative Tools* → *User Manager for Domains*.
3. Select *User* → *New User*.

Create the MUSEAdmin User Account

1. Enter User Name **MUSEAdmin**
2. Enter Full Name **MUSEAdmin**.
3. Enter Description **MUSE CV Information System Administrator**.
4. Enter Password **Muse!Admin**.
5. Confirm the Password.
6. Uncheck the *User Must Change Password at Next Logon* box.
7. Check the *Password Never Expires* box.
8. Select *Add*.

Create the MUSEBkgnd User Account

1. Enter User Name **MUSEBkgnd**.
2. Enter Full Name **MUSEBkgnd**.
3. Enter Description **MUSE CV Information System Background Task**.
4. Enter Password **Muse!Bkgnd**.
5. Confirm the Password.
6. Uncheck the *User Must Change Password at Next Logon* box.
7. Check the *Password Never Expires* box.
8. Select *Add*.

Create User Accounts for MUSE Nodes

1. Enter User Name **MUSEXXX** (where XXX corresponds to a MUSE node id).
1. Enter Full Name **MUSEXXX** (where XXX corresponds to a MUSE node id).
2. Enter Description **MUSE CV Information System User**.
3. Confirm the Password.
4. Uncheck the *User Must Change Password at Next Logon* box.
5. Check the *Password Never Expires* box.
6. Select *Add*.

Adding Windows NT User Accounts to Windows NT Local Groups

All Windows NT user accounts that will be using the MUSE CV system must be members of the MUSE Users local group. This NT group is a local group on the MUSE CV system file server. In addition, the MUSEAdmin and MUSEBkgnd accounts must also be members of the local Administrators group on the MUSE CV system file server.

Add Users to the Local Administrators Group

The following steps are performed only if the MUSEAdmin or MUSEBkgnd accounts have been newly created. Otherwise skip these steps and go to “Add Users to the Local MUSE Users Group”.

1. If the MUSE CV system file server is a primary domain controller, login to the domain using the MUSEAdmin account. If it is a member server in an existing hospital domain, login locally to file server using the Administrator account.

> **NOTE**
>
> To log into the MUSE CV system file server locally when it is a member server in an existing hospital domain, make sure the computer name (i.e.. MUSE$$$001) is highlighted in the domain box of the logon screen. If the MUSE CV system file server is a primary domain controller, logging into the domain is the only option.

2. Select *Start → Programs → Administrative Tools → User Manager for Domains*.
3. Double click on the *Administrators* group listed under *Groups* in the bottom half of the screen.
4. Select *Add*.
5. Verify that the domain name is highlighted in the *List Names From* box. If it is not highlighted, select it .
6. Highlight the *MUSEAdmin* account and select *Add*.
7. Highlight the *MUSEBkgnd* account and select *Add*.
8. Select *OK*.

9. Select *OK* at the *Local Group Properties* dialog box.
10. Select *User* → *Exit* to exit *User Manager for Domains*.

Add Users to the Local MUSE Users Group

1. Login to the domain using the MUSEAdmin account.
2. Select *Start* → *Programs* → *Administrative Tools* → *User Manager for Domains*.
3. At the *Do you want to select another domain…* message select *Yes*.
4. Enter **MUSE$$$001** in the domain box (where $$$ is a three character abbreviation for the customer name and MUSE$$$001 is the computer name of the MUSE CV system file server).
5. Select *OK*.
6. Double click on the *MUSE Users* group listed under *Groups* in the bottom half of the screen.
7. Select *Add*.
8. Verify that the proper domain name is highlighted in the *List Names From* box. If it is not highlighted, select it.

> **NOTE**
>
> When adding MUSEAdmin and MUSEBkgnd to the MUSE Users group, the proper domain is the one that the MUSE CV system is a member of. When adding a user account of hospital personnel to the MUSE Users group, choose the domain that the user account belongs to.

9. Highlight the *MUSEAdmin* account and select *Add*.
10. Repeat step 9 for *MUSEBkgnd* and all *MUSEXXX* accounts where XXX is the Muse node number.
11. Repeat steps 8 and 9 for all Windows NT accounts for everyone who will use the MUSE CV system.

> **NOTE**
>
> Step 8 is especially important when adding users to the MUSE Users group from trusted domains. The proper domain must be specified in order to find the user.

12. Select *OK*.
13. Select *OK* at the *Local Group Properties* dialog box.
14. Select *User* → *Exit* to exit *User Manager for Domains*.

Adding a User to the MUSE CV System

The MUSE CV system requires all users to have a MUSE user account in addition to a Windows NT user account. These accounts are created the same way they have been in previous versions of the MUSE CV system software. A brief description of creating an account will be given here. For more information, see the "MUSE CV information system operator's manual".

1. Login to the domain using the MUSEAdmin account.
2. Select *Start* → *Programs* → *MUSE CV Information System* → *Start MUSE CV*.
3. From within the MUSE CV system, select *System* → *System Setup*.
4. Select *Select List* → *Users*.
5. Fill in the user fields appropriately. (Consult the "MUSE CV information system operator's manual" for more information.)
6. Select *OK*.
7. Select *Options* → *Save Changes*.

Mapping a Windows NT User to a MUSE CV System User

The NT Users program maps or associates a Windows NT user account with a MUSE CV system user account. This mapping is necessary for a user to logon at a workstation where the MUSE CV system software was installed with the *Use MUSE Login?* question answered *No*. This allows NT authentication of a domain user. When the domain user starts the MUSE CV system application, the MUSE CV system checks to see if the NT user account is mapped to a MUSE CV system account. If it is, the user is authenticated and the *Edit List* appears. If it is not, an error message will appear and access to the MUSE CV system is denied. If the user will logon only at workstations where the MUSE CV system software was installed with the *Use MUSE Login?* question answered *Yes*, then the mapping or association between a Windows NT user account and a MUSE CV system user account is not needed. MUSE CV system authentication will be used. This means that the user will be presented with a MUSE CV system *Authorization* window when the MUSE CV system application is started.

1. Login to the domain using the MUSEAdmin account.
2. Select *Start* → *Programs* → *MUSE CV Information System* → *Setup* → *NT Users*.
3. Select *Users* → *New*.
4. Enter the NT User Name.

NOTE

The name should be in the form Domain Name\User Name.

5. Select the MUSE site that the MUSE user is defined in.
6. Select the MUSE user name.

7. Select *OK*.
8. Repeat as needed for all users.

Windows NT Domain Trusts (PDCs Only)

When the MUSE CV system file server functions as the primary domain controller of its own domain, it is possible that the hospital IS department will not add domain user accounts for hospital personnel to the MUSE CV system domain. These people may already have accounts in an existing hospital domain or the hospital IS department will create accounts for them in an existing hospital domain to keep user account administration easier. If this is the case, a domain trust will need to be established. A trust must be created between each hospital domain that contains user accounts of hospital personnel desiring to use the MUSE CV system and the MUSE CV system domain. The MUSE CV system domain will be the trusting domain and the hospital domain will be the trusted domain. Creating the trust replaces creating the Windows NT user accounts as described in “Defining a Windows NT User Account”. The steps in “Adding Windows NT User Accounts to Windows NT Local Groups”, “Adding a User to the MUSE CV System”, and “Mapping a Windows NT User to a MUSE CV System User” should be performed as described.

Trusting of Hospital Domain(s) by the MUSE Domain

NOTE

If the “trusted domains” relationship is established before the “trusting domains” relationship, it can take up to 15 minutes for the trust to take effect.

NT Domain Trust Setup in the Hospital Domain

1. Login to the hospital domain using a domain administrator account.
2. Select *Start* → *Programs* → *Administrative Tools* → *User Manager for Domains*.
3. Select *Policies* → *Trust Relationships…* .
4. Select the *Add* button to the right of the *Trusting Domain* box.
5. Enter the MUSE CV system domain name in the *Domain* field.
6. Enter a password. In the *Password* field. (This step is optional.)
7. Select *OK*. The MUSE CV system domain name should appear in the *Trusting Domains* box.

NT Domain Trust Setup in the MUSE CV System Domain

1. Login to the MUSE CV system domain using the MUSEAdmin account.
2. Select *Start* → *Programs* → *Administrative Tools* → *User Manager for Domains*.
3. Select *Policies* → *Trust Relationships…* .

4. Select the *Add* button to the right of the *Trusted Domains* box.
5. Enter the hospital domain name in the *Domain* box.
6. If a password was entered in "NT Domain Trust Setup in the Hospital Domain", enter the same password in the *Password* box.
7. Select *OK*.

   The hospital's domain name should appear in the *Trusted Domains* box.

Trusting of the MUSE by Hospital Domain(s)

NOTE

If the "trusted domains" relationship is established before the "trusting domains" relationship, it can take up to 15 minutes for the trust to take effect.

NT Domain Trust Setup in the MUSE CV System Domain

1. Login to the MUSE domain using the MUSEAdmin account.
2. Select *Start* → *Programs* → *Administrative Tools* → *User Manager for Domains*.
3. Select *Policies* → *Trust Relationships*… .
4. Select the *Add* button to the right of the *Trusting Domain* box.
5. Enter the hospital domain name in the *Domain* field.
6. Enter a password. In the *Password* field. (This step is optional.)
7. Select *OK*. The hospital's domain name should appear in the *Trusting Domains* box.

NT Domain Trust Setup in the Hospital Domain

1. Login to the hospital domain using the domain administrator account.
2. Select *Start* → *Programs* → *Administrative Tools* → *User Manager for Domains*.
3. Select *Policies* → *Trust Relationships*… .
4. Select the *Add* button to the right of the *Trusted Domains* box.
5. Enter the MUSE CV system domain name in the *Domain* box.
6. If a password was entered in "NT Domain Trust Setup in the MUSE CV System Domain", enter the same password in the *Password* box.
7. Select *OK*.

   The MUSE CV system domain name should appear in the *Trusted Domains* box.

Verifying Network Setup (Win 95 Clients)

For all Windows 95 clients, verify the network setup.

1. Double-click the *Network* icon from the *Control Panel* window.
2. Verify that TCP/IP is the only protocol in the list.
3. Click *File* and *Print Sharing…* .
4. Make sure all check boxes are checked. Click *OK*.
5. Click *File and Print Sharing* ...
6. Click *Properties*.
7. Verify *Browser Master* is selected in the *Property Area*.
8. Click pull-down *Value* and select *Disabled*.
9. Click *OK*.
10. Click *TCP\IP*. Click *Properties*.
11. Click the radio button *Specify and IP address*.
12. Verify/enter the *IP Address* of the node.

    node_id
13. Verify/enter the *Subnet Mask* of the node.
14. Click *DNS Configuration* tab.
15. Click radio button *Enable DNS*.
16. Verify/enter the *Host* name.
17. Click *OK*.
18. Click *Client for Microsoft Networks* icon and click *Properties*.
19. In the Logon validation section, click *Log on to Windows NT domain*.
20. Verify/edit the Windows NT Domain:
    - If MUSE file server is the Primary Domain Controller, verify/edit **MUSE$$$**
    - If MUSE file server is a member server, verify/edit hospital's domain
21. Click the *Quick Logon* radio button.
22. Click *OK*.
23. Click *Primary Network Logon* pull down and select *Windows Logon*.
24. Click *OK*.
25. Click *Yes* to restart the computer.
26. Verify MUSEXXX is in the *User Name* field.
27. Type **Muse!XXX** in the *Password* edit field.
28. Verify Domain field

- If MUSE file server is the Primary Domain Controller, verify/edit **MUSE$$$**
- If MUSE file server is a member server, verify/edit hospital's domain

29. Verify that the *Save this password…* check box is checked.
30. Click *OK*.

Verifying Network Setups (WFW Clients)

For all WFW clients, verify the network setup as described in this section.

1. Select *Program Manager* → *Network* → *Network Setup*.
2. Click the *Drivers...* button.
3. Highlight *Microsoft TCP/IP* and then click the *Setup...* button.
4. If DHCP was selected in the Pre-Build Site Survey (419931-007), check the *Enable Automatic DHCP Configuration* checkbox.
5. If a static IP Address was entered in the Site Survey, enter *IP Address, Subnet Mask,* and *Default Gateway*.
6. If WINS Server was entered in the Site Survey, enter WINS Server IP address.
7. If Secondary WINS Server was entered in the Site Survey, enter Secondary WINS Server IP address.
8. If DNS was checked in Site Survey, select the *DNS...* button.
   - Enter *Domain Name*.
   - Enter IP addresses in list.
   - Select *OK*.
9. Select *Advanced...* button in *TCP/IP Configuration* window.
   - If DNS was checked in Site Survey, check the *Enable DNS for Windows Name Resolution* checkbox.
   - If LMHOSTS was checked in Site Survey, check the *Enable LMHOSTS Lookup* checkbox.
   - Select *OK*.
10. Select *OK*.
11. Select *Close*.
12. Select *OK* in the next two windows.
13. Select *Continue*.
14. Select *Main* → *Control Panel* → *Network* and verify the following:
    - *Computer Name* **MUSE$$$$XXX**

- *Workgroup* **MUSE$$$** (if file server is PDC)
  Workgroup [Hospital Domain] (if file server member server)
- *Default Logon Name* **MUSEXXX**

15. Select *Startup* button.
    - Verify *Logon On to Windows NT...* checkbox is checked.
    - Enter **MUSE$$$** (if file server is PDC)
      Enter [Hospital Domain] (if file server is member server)
    - Verify *Don't Display Message...* checkbox is checked.
    - Select *OK*.
16. Close *Program Manager*.
17. Select *OK* to confirm your choice.
18. Press **Ctrl** + **Alt** + **Delete** to restart computer.

    The first time you start MUSE a screen appears prompting you enter *Name, Password,* and *Domain*. *Name* and *Domain* will already be entered correctly.
19. Enter **Muse!XXX** (where XXX = Node_id) for *Password* and select *OK*.

> **NOTE**
>
> The Password prompt appears only the first time you logon. It will not be necessary to enter this information every time you logon.

Installing Windows NT Server 4.0 Service Pack 4

NOTE

If you are reinstalling **ANYTHING** from the original Windows NT 4.0 CD-ROM, you **MUST REINSTALL** the Windows NT 4.0 Service Pack. If you do not need to reinstall Windows NT 4.0 Service Pack, continue with “Creating an Emergency Repair Disk”.

1. Make sure that you are logged in as Administrator.
2. Insert the MUSE Software CD in CD-ROM drive.
3. Click *Start* → *Run...* .
4. Type **Z:\BAT\SP4MDAC.BAT** and left click **OK**.

   System will automatically copy files and setup apps.
5. At the *Microsoft Windows Year 2000...* prompt, left click *Yes* to restart system.

Creating an Emergency Repair Disk

This is the final step in the MUSE CV Information System installation process. Before performing the following steps, the file server and clients should be installed and working on the network. Once all nodes can login to the domain and appear to be functioning properly, the emergency repair disk can be created.

1. Insert a floppy disk.
2. Select *Start* → *Run*.
3. Type **rdisk** <**Space**> **/s** and press **Enter**.
4. At the *Setup can create an Emergency Repair disk...* screen, select *Yes*.
5. At the *Label a floppy disk...* screen, select *OK*.
6. At the *Windows NT repair information contains...* screen, select *OK*.
7. Remove the floppy disk, date and label it **MUSE$$$001 Emergency Repair Disk**, where $$$ is the three-character abbreviation for the hospital name.

Merging Residual Data into the Database

If this is a “forklift upgrade” (file server is replacing a Marquette DEC-based tower or a PC-based MUSE system file server), the customer’s database was previously copied and sent to Marquette for conversion. The converted database is on the new file server. Any additional data which the customer collected since the copy of the database was sent to Marquette for conversion is referred to as “residual data”.

See “MUSE CV information system Merging Residual Data (Version 005A)” (PN 419931-017) for detailed procedures.

Installing Network Printers

Introduction

Marquette Medical Systems, Inc. only supports printer that it sells. PostScript output must be Adobe PostScript Level 2 raw output.

The HP 4000N PostScript printer drivers must be used for network printing. The drivers are on the CD-ROM (PN 420858-001).

Validation has been done on the drivers that ship with Windows NT 4.0 and Windows 95 (not to be confused with the MUSE CV Word printer drivers – (PN 419637-000) – which is the proper printer driver for Windows for Workgroups operating system).

If network printing is not used, the PostScript printer must be connected to a MUSE node via the printer port. A MUSE CV device is configured for this printer, and it is not required to have an operating system printer driver loaded for normal MUSE operation.

The following three general options exist for MUSE network printing:

1. Networked printers served by the MUSE CV file server or another Windows NT printer server.
2. Networked printers served by a Novell print server
3. Microsoft's peer to peer shared printer connected to the printer port of a MUSE client or customer client.

Option # 1 is the preferred configuration for network printing option for the MUSE CV system.

The customer is responsible for installing the Netware Client onto the MUSE-CV system. This is not the responsibility of Marquette.

Configuring a MMS Network Printer

This section serves as a quick guide to configure the HP LaserJet 4000N as a network printer. For more complete details on setup see the printer's manual.

Before You Begin

Before you begin, obtain the following necessary information:

- Printer's IP address
- Printer's Subnet mask
- Printer's default gateway

Set Up The Printer

All setup of the printer is done using the display panel located on the front/top of the printer.

1. Press **+ Menu** seven times until the *EIO2 JetDirect Menu* is displayed.
2. Press **+ Item** once or until the *cfg network=no* * is displayed.
3. Press **Value +** and select to display the *cfg network=yes*.
4. Press **Item +** so the *Novell=off* item is displayed.
5. Press **Item +** so the *DLC/LLC=off* item is displayed
6. Press **Item +** so the *TCP/IP=off* item is displayed (if the item is *TCP/IP=on* than skip to the next step). Press **Value +** and select to change *TCP/IP=on*.
7. Press **Item +** so the *ETALK=off* item is displayed.
8. Press **Item +** so the *cfg TCP/IP=no* item is displayed. Press **Value +** and select to display cfg *TCP/IP=yes*.
9. Press **Item +** to display *bootp=no*.
10. Press **Item +** to display *IP byte 1=xxx*. Press the **Value +** key until the desired most significant byte for the IP address is set and press **Select**.
11. Press **Item +** to display *IP byte 2=xxx*. Press the **Value +** key until the desired byte for the IP address is set and press **Select**.
12. Press **Item +** to display *IP byte 3=xxx*. Press the **Value +** key until the desired byte for the IP address is set and press **Select**.
13. Press **Item +** to display *IP byte 4=xxx*. Press the **Value +** key until the desired byte for the IP address is set and press **Select**.
14. Press **Item +** to display *SM byte 1=xxx*. Press the **Value +** key until the desired value for the item is set and press **Select**.
15. Press **Item +** to display *SM byte 2=xxx*. Press the **Value +**key until the desired value for the item is set and press **Select**.
16. Press **Item +** to display *SM byte 3=xxx*. Press the **Value +** key until the desired value for the item is set and press **Select**.
17. Press **Item +** to display *SM byte 4=xxx*. Press the **Value +** key until the desired value for the item is set and press **Select**.

18. Press **Item +** five times to display *GW byte 1=xxx* (leave the LG byte values set to the default). Press the **Value +** key until the desired value for the item is set and press **Select**.
19. Press **Item +** to display *GW byte 2=xxx*. Press the **Value +** key until the desired value for the item is set and press **Select**.
20. Press **Item +** to display *GW byte 3=xxx*. Press the **Value +** key until the desired value for the item is set and press **Select**.
21. Press **Item +** to display *GW byte 4=xxx*. Press the **Value +** key until the desired value for the item is set and press **Select**.
22. Press **Item +** to display the *Timeout=120* value.
23. Press **Go** when setup is complete.

Printout of Printer's Configuration

To printout the printer's configuration follow the steps below.

1. From the ready state, press the **Menu** button one time to display the information menu.
2. From the information menu, press the **Item +** button two times to display the Print printer configuration.
3. The current printer configuration will be printed.

Configuring MUSE CV System to Print to Printers Shared by the Server

NOTE

Use this guide to setup a network printer for any Windows NT Server.

To properly configure and test network printer ensure the following:

1. Ensure that the Network Printing option is enabled on the MUSE CV system.
2. Each network printer must be physically attached to the network which the printer server is on.
3. Each network printer must be configured with TCP/IP.

Follow the steps below to setup a network printer for use by the MUSE CV Information system using the MUSE CV Information system file server as the print server.

1. Configure the printer to be a TCP networked printer. The printer requires a unique IP address, subnet mask, and default gateway that is specific to the printer's installation area. Refer to "Configuring a MMS Network Printer" or the OEM manual which shipped with the printer for detailed instructions.
2. Connect the printer to the network.
3. Use TCP service Ping to ensure proper accessibility over the network to the printer from the NT print server. For a MS-DOS prompt on the NT print server, type **ping** <**Space**>

xxx.xxx.xxx.xxx (where xxx.xxx.xxx.xxx is the IP address of the printer).

4. Logon to the MUSE CV system file server using a local administrator account.
5. Select *My Computer* → *Printers*.
6. Select *Add Printer*.

   Ensure that the *My Computer* radio button is selected and select *Next*.
7. Select *Add Port*.
8. From the *Available Printer Ports* box, select the *LPR Port* option and select the *New Port* button.
9. Type the IP address of the new printer in the *Name or Address of Server* field.
10. Type **raw** in the Name of printer or print queue field and select *OK*.
11. Select *Close*.
12. In the *Add Printer Wizard* dialog box select *Have Disk...* .
13. Insert the MUSE Software CD (PN 420858-001) and type **z:\hpprint\nt** and select *OK*.
14. Select *HP LaserJet 4000 Series PS* and select *Next>>*.
15. Enter the printer logical name as it appears on the Pre-Build Site Survey for this system.
16. Verify that the *Keep Existing Driver* radio button is selected and select *Next*.
17. At the Add printer wizard printer name, enter a name (i.e. hplj4000n01)
18. At the *Do you want your Windows-based…* message, verify that the *No* radio button is selected and select *Next*.
19. Select the *Shared* radio button, enter a share name, and select *Next*.
20. At the *Would you like to print a test page?* message, select *Finish*.
21. At the Printer test page completed message, select *Yes*.

22. Add the printer as a MUSE CV Information system device. See the “MUSE CV information system operator’s manual” for more information.

NOTE

When setting up the device in the MUSE CV information system, define it with a type of Postscript, check the Remote device checkbox, and enter a UNC Name of (\\servername\sharename)
where (\\servername) is the name of the MUSE CV information system file server and \sharename is the name of the share specified when adding the printer with the NT print wizard.

Configuring MUSE CV System to Print to Novell Shared Printers

The Gateway (and Client) Services for Netware (GSNW) need to be installed to print to printers driven by Novell. To add GSNW:

1. Log on to the file server using a local administrator account.
2. Select *Start* → *Settings* → *Control Panel*.
3. Double click the *Network* icon.
4. Click the *Services* tab.
5. Click *Add*.
6. Click *Gateway (and Client) Services for Netware*, and click *OK*.
7. Type the path to the GSNW files, and click *Continue*.
8. In the *Client Servies for NetWare Dialog* box, check *Preferred Server* and enter **None** for the *Select Preferred Server* field.
9. Restart the computer for the changes to take effect. After the changes take effect, there will be a *GSNW* icon added to the *Control Panel* window.

Activating the Gateway

Before enabling a gateway on a computer running Windows NT Server:

1. A user account must be set up on the NetWare network with the necessary rights for the printers you want to access.
2. The NetWare server must have a group named NTGATEWAY with the necessary rights for the printers you want to access.
3. The NetWare user account you use must be a member of the NTGATEWAY group.

If MUSE CV Word is required to print to a NetWare printer, install the NetWare gateway. The NetWare gateway service allows the MUSE CV system file server the capability of re-sharing the Novell printer shares. This enables a central administration point for the NetWare printing from the MUSE CV system. Follow the steps below to activate the NetWare gateway.

1. In the *Gateway Services for NetWare* dialog box, verify that the preferred server field is **None** or as specified by the customer's IS support.
2. Click *Gateway*.
3. Select the *Enable Gateway* check box.
4. Type the NetWare user account created to logon to the NetWare server from a computer running Windows NT Server, and click Add. This account should be MUSEBkgnd with a password of Muse!Bkgnd).

Now this network printer must be configured within the MUSE application, see "MUSE CV information system operator's manual" for more information on configuring a MUSE CV system remote/network printer.

Configuring Peer to Peer Printers

This section explains how to configure MUSE CV system network printers which are local printers shared by Windows NT, Windows 95, or Windows for Workgroup 3.11.

Windows NT

1. Logon to the NT 4.0 workstation using a local administrator account.
2. Select *My Computer* → *Printers*.
3. Select *Add Printer*.
4. Ensure that the *My Computer* radio button is selected and select *Next*.
5. From the *Available Printer Ports* box, select the *LPT Port* option which the printer is attached to and press the *Next>>* button.
6. In the *Add Printer Wizard* dialog box select *Have Disk...* .
7. Insert the MUSE Software CD (PN 420858-001) and type **z:\hpprint\nt** and select *OK*.
8. Select *HP LaserJet 4000 Series PS* and select *Next>>*.
9. Do not mark this printer as the default printer.
10. Enter the printer logical name as it appears on the Pre-Build Site Survey for this system.
11. Check the *Shared* box and enter the same share name from the printer name field in step 8.
12. Answer/verify *Yes* when prompted *Would you like to print a test page?* And select *Finish*.
13. Verify that the test page printed properly.

Windows 95

Verify that the client's file and print sharing is set so it may share its printers on the network. This setup must take place after the network is setup. Select *Start → Control Panel → Networking*. Verify that the File and Print Sharing service is loaded and active. For more details see the proper installation section on network setup for the Windows 95 client.

1. Select *Start → Settings → Printers*.
2. From the *Printers* screen, double-click on *Add Printer*.
3. Select *Local Printer* and select *Next>>* .
4. In the *Add Printer Wizard* dialog box select *Have Disk...* .
5. Insert the MUSE Software CD (PN 420858-001)
6. From *copy manufacturer's files from* screen, type **z:\hpprint\win95** and select *Next>>* ..
7. Select *HP LaserJet 4000 Series PS* and select *Next>>*.
8. Check the printer port that the printer is physically connected to and select *Next>>* .
9. On the assigned name screen, type the Printer Name as specified from the pre-build survey.
10. Answer/verify *Yes* for the question: would you like to print a test page and select *Finish*.
11. Verify that the test page successfully prints.
12. From the *Printers* screen select the newly added printer.
13. Select *File → Sharing...* and check the *Shared As* button and enter the share name for the printer as specified in the pre-build survey.

Windows for Workgroups

Verify that file and print sharing has already been activated in the previous build sets.

1. In the *Control Panel* window, double-click the *Printers* icon.
2. Check the *Use Print Manger* box.
3. In the *List of Printers* box, select/verify *Install unlisted or Updated Printer*.
4. Select the *Install* button.
5. Insert the MUSE Software CD (PN 420858-001).
6. Type **z:\hpprint\wfw** for the path.
7. Select *OK* in the *Install Driver* window.
8. Select the HP LaserJet 4000 Series PS 1200 driver and select *OK*.
9. From the *Main* program group, double-click the *Printer Manager* icon.
10. Share the printer by selecting *Printer → Share Printer As…* .
11. Enter the share name in the *Share As:* field as specified by the pre-build survey.

Troubleshooting

This section serves as a troubleshooting guide from frequently encountered problems with the installation and setup of MUSE CV network printing.

MUSE CV Checkout

1. Ping the IP address of the network printer from the file server or print server.
2. Select *Start* → *Settings* → *Control Panel* → *Services* and verify that CVIS0007 service is started.
3. Create a remote device in the MUSE CV system and print several reports or ECGs to the network printer.
4. Restart the MUSE CV system as described in chapter 4, “Integrated Maintenance Suite”.

Connectivity to the Printer

If you are trying to print to a printer served by NT, it is likely that you will need a user account setup in the domain where the print server resides. That user must be setup to have PRINT permissions for that printer share (by default NT sets up this permission for EVERYONE and MUSE-CV is setup to allow MUSE Users print rights). Verify that you can connect to the printer from a MS-DOS window. Type the following command:

NET <**space**> **USE** <**Space**> **LPT3:** <**space**> **\\computer name\printer share name**

If this command completes successfully than network printing from the MUSE CV system will work.

The printer name as it appears in the *Network Neighborhood* is not the printer’s share name. Verify that the share name is correct by looking at the share properties of the printer.

If this command fails try the following:

Ping <**space**> <**IP Address**> (where <IP Address> is the IP Address assigned to the printer)

If the printer replies, this is an indication that the printer is assigned the proper IP address.

Ping <**space**> <**IP Address**> (where <IP Address> is the IP Address assigned to the Printer Server)

If the printer server does not reply, this is an indication that there is a problem with NetBIOS name resolution. You may need to specify an LMHOSTS entry for the printer server and/or its NT domain, see LMHOSTS.SAM for more information on configuring LMHOSTS.

Error 67, The network name cannot be found

This error indicates that the wrong share name or computer name is being used for the net use command. Verify the proper share name of the printer by looking on the computer which is sharing the printer. Use caution since the printer name configured in NT does not have to match

the share name of the printer. The actual share name of the printer may be communicated incorrectly as the printer name.

If Pinging the printer server works, try doing a NET VIEW on the printer server as follows:

NET <**Space**> **VIEW** <**Space**> ****“Computername”

This command will return a list of resources for the printer server. In this list, verify the share name of the printer that you wish to print to.

If NET VIEW returns ERROR 6118, this is an indication that no Master Browser exists on the computer’s local network segment. If there are only WFWG nodes on the network segment, setup one of the nodes to be a Master Browser by following the steps below:

Use a text editor (such as MS-DOS Editor or Windows for Workgroups *Notepad*) to edit the SYSTEM.INI file on one machine in the workgroup and add the following entry to the [Network] section:

MaintainServerList=yes

You can also set a second computer in the workgroup to Auto and the remainder at "no." On each computer that you edit the SYSTEM.INI file, you must quit and restart Windows for Workgroups.

NOTE

By using LMHOSTS, it is not necessary to “browse” the computer that has the shared resources. It is nice to NET VIEW the resources of that computer to verify the printer share name.

Error 5, Access denied message

This error is an indication that MUSE$$$XXX does not have proper access to the printer and/or NT printer server. Network printing on NT uses the MUSEBknd account which is located on the NT domain which the MUSE fileserver is logged into. This user account may need to be configured to have access to the print server and/or printer.

MUSE CV System Errors

Error 1801: Task: 7, Error opening printer (\\xxx\xxx)

This error is an indication that the node running network printing cannot find the printer. Verify that the name is setup properly as a MUSE device (especially ensure the MUSE CV system *Device Type* is *POSTCRIPT*)

No Output From Printer

Ensure that the MUSE CV system was shutdown and restarted if a MUSE CV system device has been added.

Defining a New MUSE CV System User

Introduction

Defining users of the MUSE CV system is a four-part process.

- Define an NT user account
- Include the NT user account into an NT local group called MUSE Users on the MUSE CV system file server.
- The user must also be defined within the MUSE CV system application. (This is no different from how users were defined in pre-Windows NT versions of the MUSE system.)
- Map a Windows NT user account to a MUSE CV system account.

Defining a Windows NT User Account

Windows NT user accounts for the MUSE CV system should be domain accounts. These accounts must be created by someone who has the ability to add users to the domain. This is typically done by a domain administrator. If the MUSE CV system file server is its own primary domain controller, the Administrator account or the MUSEAdmin account (if it exists) should be used to create new domain accounts. If the MUSE CV system file server is a member server in an existing hospital domain, someone from the hospital IS department who can log on as a domain administrator must create the new accounts.

The procedures below explain how to create the required MUSE CV system Windows NT user accounts. The preferred and easier way to create the accounts is to use the cvuser utility found in the c:\mei directory of the MUSE CV system file server. User Manager for Domains can also be used to manually create the accounts. Hospital IS department personnel will also create NT user accounts for hospital personnel that will use the MUSE CV system. These accounts will not be created using the steps below. They will be created in the way the hospital normally creates Windows NT user accounts.

Creating User Accounts Using CVUSER

1. Login to the domain using a domain administrator account.

> **NOTE**
>
> IS department personnel will do this unless they are willing to give out the user name and password for a domain administrator account.

2. Select *Start* → *Programs* → *Command Prompt*.
3. Type **cvuser** <**Space**> **MUSEAdmin** <**Space**> **MUSE$$$001** (where **$$$** is a three character abbreviation for the customer

name and **MUSE$$$001** is the computer name of the MUSE CV system file server).

> **NOTE**
>
> The cvuser utility exists in the c:\mei directory of the MUSE CV system file server. If cvuser is run from the MUSE CV system file server, the MUSE$$$001 parameter is not required.

4. Type **cvuser** <**Space**> **MUSEBkgnd** <**Space**> **MUSE$$$001**
5. Type **cvuser** <**Space**> **MUSEXXX** <**Space**> **MUSE$$$001** (where **XXX** corresponds to a MUSE node id).

> **NOTE**
>
> The cvuser utility will place new newly created user accounts into the local MUSE Users group on the MUSE CV system file server. The MUSEAdmin and MUSEBkgnd accounts will also be placed in the local Administrators group on the MUSE CV system file server. Therefore if using the cvuser utility, skip “Adding Windows NT User Accounts to Windows NT Local Groups” and go directly to “Adding a User to the MUSE CV System”.

Creating User Accounts Using User Manager for Domains

1. Log in to the domain using a domain administrator account.
2. Select *Start* → *Programs* → *Administrative Tools* → *User Manager for Domains*.
3. Select *User* → *New User*.

Create the MUSEAdmin User Account

1. Enter User Name **MUSEAdmin**
2. Enter Full Name **MUSEAdmin**.
3. Enter Description **MUSE CV Information System Administrator**.
4. Enter Password **Muse!Admin**.
5. Confirm the Password.
6. Uncheck the *User Must Change Password at Next Logon* box.
7. Check the *Password Never Expires* box.
8. Select *Add*.

Create the MUSEBkgnd User Account

1. Enter User Name **MUSEBkgnd**.
2. Enter Full Name **MUSEBkgnd**.
3. Enter Description **MUSE CV Information System Background Task**.
4. Enter Password **Muse!Bkgnd**.
5. Confirm the Password.
6. Uncheck the *User Must Change Password at Next Logon* box.
7. Check the *Password Never Expires* box.
8. Select *Add*.

Create User Accounts for MUSE Nodes

1. Enter User Name **MUSEXXX** (where XXX corresponds to a MUSE node id).
1. Enter Full Name **MUSEXXX** (where XXX corresponds to a MUSE node id).
2. Enter Description **MUSE CV Information System User**.
3. Confirm the *Password*.
4. Uncheck the *User Must Change Password at Next Logon* box.
5. Check the *Password Never Expires* box.
6. Select *Add*.

Adding Windows NT User Accounts to Windows NT Local Groups

All Windows NT user accounts that will be using the MUSE CV system must be members of the MUSE Users local group. This NT group is a local group on the MUSE CV system file server. In addition, the MUSEAdmin and MUSEBkgnd accounts must also be members of the local Administrators group on the MUSE CV system file server.

Add Users to the Local Administrators Group

The following steps are performed only if the MUSEAdmin or MUSEBkgnd accounts have been newly created. Otherwise skip these steps and go to “Add Users to the Local MUSE Users Group”.

1. If the MUSE CV system file server is a primary domain controller, login to the domain using the MUSEAdmin account. If it is a member server in an existing hospital domain, login locally to file server using the Administrator account.

NOTE

To log into the MUSE CV system file server locally when it is a member server in an existing hospital domain, make sure the computer name (i.e.. MUSE$$$001) is highlighted in the domain box of the logon screen. If the MUSE CV system file server is a primary domain controller, logging into the domain is the only option.

2. Select *Start* → *Programs* → *Administrative Tools* → *User Manager for Domains*.
3. Double click on the *Administrators* group listed under *Groups* in the bottom half of the screen.
4. Select *Add*.
5. Verify that the domain name is highlighted in the *List Names From* box. If it is not highlighted, select it .
6. Highlight the *MUSEAdmin* account and select *Add*.
7. Highlight the *MUSEBkgnd* account and select *Add*.
8. Select *OK*.
9. Select *OK* at the *Local Group Properties* dialog box.
10. Select *User* → *Exit* to exit *User Manager for Domains*.

Add Users to the Local MUSE Users Group

1. Login to the domain using the MUSEAdmin account.
2. Select *Start* → *Programs* → *Administrative Tools* → *User Manager for Domains*.
3. At the *Do you want to select another domain…* message select *Yes*.
4. Enter **MUSE$$$001** in the domain box (where $$$ is a three character abbreviation for the customer name and MUSE$$$001 is the computer name of the MUSE CV system file server).
5. Select *OK*.
6. Double click on the *MUSE Users* group listed under *Groups* in the bottom half of the screen.
7. Select *Add*.
8. Verify that the proper domain name is highlighted in the *List Names From* box. If it is not highlighted, select it.

> **NOTE**
>
> When adding MUSEAdmin and MUSEBkgnd to the MUSE Users group, the proper domain is the one that the MUSE CV system is a member of. When adding a user account of hospital personnel to the MUSE Users group, choose the domain that the user account belongs to.

9. Highlight the *MUSEAdmin* account and select *Add*.
10. Repeat step 9 for *MUSEBkgnd* and all *MUSEXXX* accounts where XXX is the Muse node number.

11. Repeat steps 8 and 9 for all Windows NT accounts for everyone who will use the MUSE CV system.

> **NOTE**
>
> Step 8 is especially important when adding users to the MUSE Users group from trusted domains. The proper domain must be specified in order to find the user.

12. Select *OK*.
13. Select *OK* at the *Local Group Properties* dialog box.
14. Select *User* → *Exit* to exit *User Manager for Domains*.

Adding a User to the MUSE CV System

The MUSE CV system requires all users to have a MUSE user account in addition to a Windows NT user account. These accounts are created the same way they have been in previous versions of the MUSE CV system software. A brief description of creating an account will be given here. For more information, see the "MUSE CV information system operator's manual".

1. Login to the domain using the MUSEAdmin account.
2. Select *Start* → *Programs* → *MUSE CV Information System* → *Start MUSE CV*.
3. From within the MUSE CV system, select *System* → *System Setup*.
4. Select *Select List* → *Users*.
5. Fill in the user fields appropriately. (Consult the "MUSE CV information system operator's manual" for more information.)
6. Select *OK*.
7. Select *Options* → *Save Changes*.

Mapping a Windows NT User to a MUSE CV System User

The NT Users program maps or associates a Windows NT user account with a MUSE CV system user account. This mapping is necessary for a user to logon at a workstation where the MUSE CV system software was installed with the *Use MUSE Login?* question answered *No*. This allows NT authentication of a domain user. When the domain user starts the MUSE CV system application, the MUSE CV system checks to see if the NT user account is mapped to a MUSE CV system account. If it is, the user is authenticated and the *Edit List* appears. If it is not, an error message will appear and access to the MUSE CV system is denied. If the user will logon only at workstations where the MUSE CV system software was installed with the *Use MUSE Login?* question answered *Yes*, then the mapping or association between a Windows NT user account and a MUSE CV system user account is not needed. MUSE CV system authentication will be used. This means that the user will be presented with a MUSE CV system *Authorization* window when the MUSE CV system application is started.

1. Login to the domain using the MUSEAdmin account.
2. Select *Start* → *Programs* → *MUSE CV Information System* → *Setup* → *NT Users*.
3. Select *Users* → *New*.
4. Enter the NT User Name.

> **NOTE**
>
> The name should be in the form Domain Name\User Name.

5. Select the MUSE site that the MUSE user is defined in.
6. Select the MUSE user name.
7. Select *OK*.
8. Repeat as needed for all users.

Windows NT Domain Trusts (PDCs Only)

When the MUSE CV system file server functions as the primary domain controller of its own domain, it is possible that the hospital IS department will not add domain user accounts for hospital personnel to the MUSE CV system domain. These people may already have accounts in an existing hospital domain or the hospital IS department will create accounts for them in an existing hospital domain to keep user account administration easier. If this is the case, a domain trust will need to be established. A trust must be created between each hospital domain that contains user accounts of hospital personnel desiring to use the MUSE CV system and the MUSE CV system domain. The MUSE CV system domain will be the trusting domain and the hospital domain will be the trusted domain. Creating the trust replaces creating the Windows NT user accounts as described in “Defining a Windows NT User Account”. The steps in “Adding Windows NT User Accounts to Windows NT Local Groups”, “Adding a User to the MUSE CV System”, and “Mapping a Windows NT User to a MUSE CV System User” should be performed as described.

Trusting of Hospital Domain(s) by the MUSE Domain

NOTE

If the “trusted domains” relationship is established before the “trusting domains” relationship, it can take up to 15 minutes for the trust to take effect.

NT Domain Trust Setup in the Hospital Domain

1. Login to the hospital domain using a domain administrator account.
2. Select *Start* → *Programs* → *Administrative Tools* → *User Manager for Domains*.
3. Select *Policies* → *Trust Relationships*… .
4. Select the *Add* button to the right of the *Trusting Domain* box.
5. Enter the MUSE CV system domain name in the *Domain* field.
6. Enter a password. In the *Password* field. (This step is optional.)
7. Select *OK*. The MUSE CV system domain name should appear in the *Trusting Domains* box.

NT Domain Trust Setup in the MUSE CV System Domain

1. Login to the MUSE CV system domain using the MUSEAdmin account.
2. Select *Start* → *Programs* → *Administrative Tools* → *User Manager for Domains*.
3. Select *Policies* → *Trust Relationships*… .
4. Select the *Add* button to the right of the *Trusted Domains* box.
5. Enter the hospital domain name in the *Domain* box.

6. If a password was entered in “NT Domain Trust Setup in the Hospital Domain”, enter the same password in the *Password* box.
7. Select *OK*.

   The hospital’s domain name should appear in the *Trusted Domains* box.

Trusting of the MUSE by Hospital Domain(s)

> **NOTE**
>
> If the “trusted domains” relationship is established before the “trusting domains” relationship, it can take up to 15 minutes for the trust to take effect.

NT Domain Trust Setup in the MUSE CV System Domain

1. Login to the MUSE domain using the MUSEAdmin account.
2. Select *Start* → *Programs* → *Administrative Tools* → *User Manager for Domains*.
3. Select *Policies* → *Trust Relationships*… .
4. Select the *Add* button to the right of the *Trusting Domain* box.
5. Enter the hospital domain name in the *Domain* field.
6. Enter a password. In the *Password* field. (This step is optional.)
7. Select *OK*. The hospital’s domain name should appear in the *Trusting Domains* box.

NT Domain Trust Setup in the Hospital Domain

1. Login to the hospital domain using the domain administrator account.
2. Select *Start* → *Programs* → *Administrative Tools* → *User Manager for Domains*.
3. Select *Policies* → *Trust Relationships*… .
4. Select the *Add* button to the right of the *Trusted Domains* box.
5. Enter the MUSE CV system domain name in the *Domain* box.
6. If a password was entered in “NT Domain Trust Setup in the MUSE CV System Domain”, enter the same password in the *Password* box.
7. Select *OK*.

   The MUSE CV system domain name should appear in the *Trusted Domains* box.

Adjusting Fmtopts.xxx Print Settings

Starting with software version 005A, the MUSE CV system uses a print library for PC-based plot formatting. For each data type, report formatting can be adjusted by editing its appropriate Fmtopts.xxx file using any text editor (where the xxx file extension indicates the data type). The path to the Fmtopts files is d:\vol000\system\sysinf\.

When opened with the *Notepad* accessory, the *d:\vol000\system\sysinf\Fmtopts.ecg* file appears as shown below.

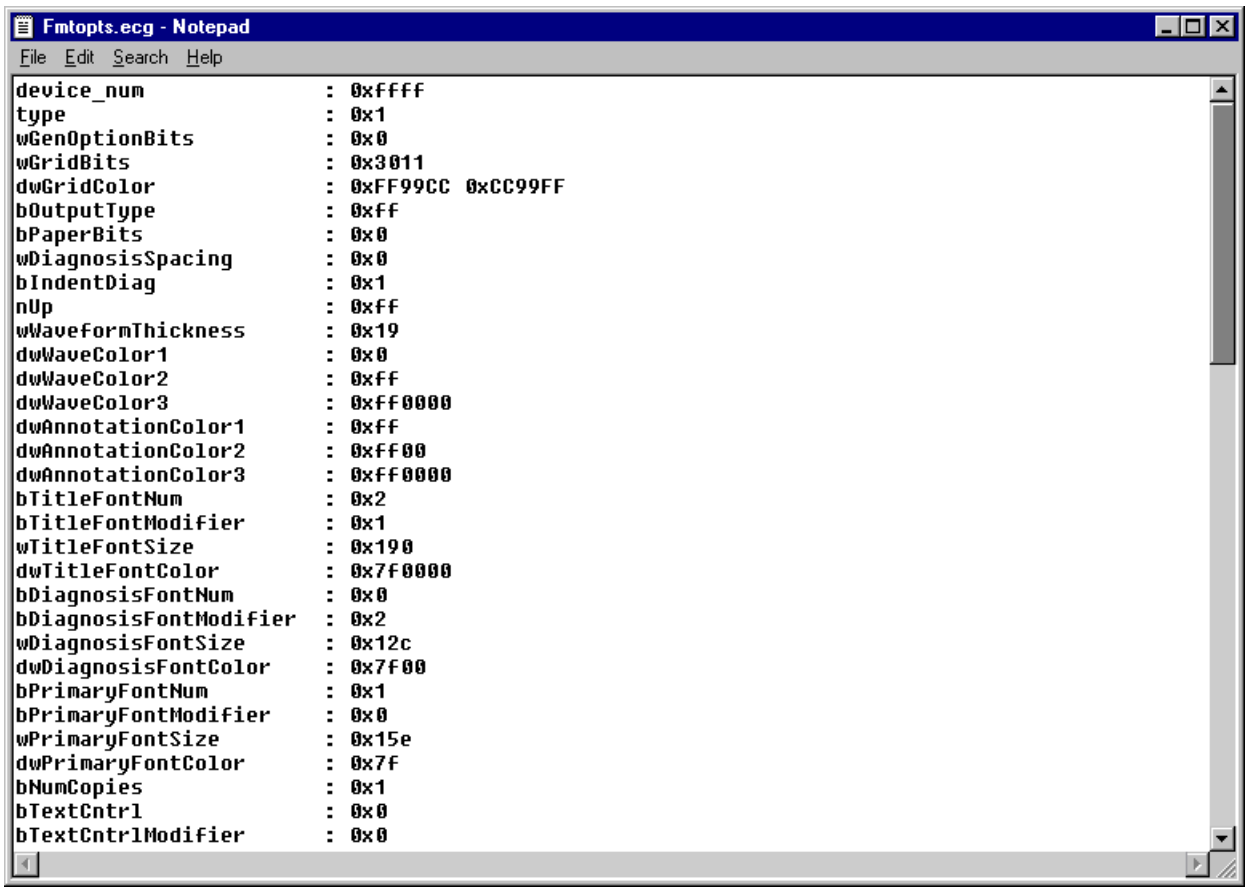

```
device_num              : 0xffff
type                    : 0x1
wGenOptionBits          : 0x0
wGridBits               : 0x3011
dwGridColor             : 0xFF99CC 0xCC99FF
bOutputType             : 0xff
bPaperBits              : 0x0
wDiagnosisSpacing       : 0x0
bIndentDiag             : 0x1
nUp                     : 0xff
wWaveformThickness      : 0x19
dwWaveColor1            : 0x0
dwWaveColor2            : 0xff
dwWaveColor3            : 0xff0000
dwAnnotationColor1      : 0xff
dwAnnotationColor2      : 0xff00
dwAnnotationColor3      : 0xff0000
bTitleFontNum           : 0x2
bTitleFontModifier      : 0x1
wTitleFontSize          : 0x190
dwTitleFontColor        : 0x7f0000
bDiagnosisFontNum       : 0x0
bDiagnosisFontModifier  : 0x2
wDiagnosisFontSize      : 0x12c
dwDiagnosisFontColor    : 0x7f00
bPrimaryFontNum         : 0x1
bPrimaryFontModifier    : 0x0
wPrimaryFontSize        : 0x15e
dwPrimaryFontColor      : 0x7f
bNumCopies              : 0x1
bTextCntrl              : 0x0
bTextCntrlModifier      : 0x0
```

MD1313-1A

Change the Font

To change a particular font, edit the appropriate *FontNum* line using the following information:

FontNum Settings		
Number	**PS/PCL/FAX**	**Thermal**
0	Courier	Monospaced
1	Times Roman	Proportional
2	Helvetica	Proportional

For example, in the figure shown, the title is currently set to be the Helvetica font.

```
bTitleFontNum      :  0x2
                      ↖──── Helvetica
```

To change the title to the Times Roman font, change the “2” to a “1” as shown.

```
bTitleFontNum      :  0x1
                      ↖──── Times Roman
```

Change the Font Modifier

To change a font modifier, edit the appropriate *FontModifier* line using the following information:

FontModifier Settings		
Number	**PS/PCL/FAX**	**Thermal**
0	none	N/A
1	**Bold**	N/A
2	*Italic*	N/A
3	***Bold Italic***	N/A

Change Sizes

All sizes are in 1/100 mm.
0x## numbers are hexadecimal numbers.
0## numbers are octal numbers.
numbers are decimal numbers.

General Rules for Editing Fmtopts.xxx Files

1. Edit only the following lines:

   wWaveformThickness
   bTitleFontNum
   bTitleFontModifier
   bTitleFontSize
   bDiagnosisFontNum
   bDiagnosisFontModifier
   bDiagnosisFontSize
   bPrimaryFontNum
   bPrimaryFontModifier
   bPrimaryFontSize
   Do not delete or add any lines in the Fmtopts.xxx files.
2. Do not rearrange any lines in the Fmtopts.xxx files.
3. Changing font sizes may have some unusual effects on a thermal printer. If the system has a thermal printer, remember to print a report to it as part of your test.
4. Changing lines other than those that are listed in step 1 may, or may not, affect the printouts.
5. Changing the Fmtopts.xxx files will change Web page formatting of these reports.

4 Assembly Procedures

The following assembly procedures are contained in this chapter:

MUSE File Server	AP MUSE File Server Rev A
MUSE Tower File Server (Intel)	AP 900124-701 Rev T
MUSE RAID/Rack File Server (Compaq)	AP 901107-XXX Rev P
MUSE Workstation with Windows 95	AP 901070-W95 Rev G
MUSE Workstation with WFW 3.1.1	AP 901070-WFW Rev G
HIS Test Box	AP 901070-HIS Rev H
Butter Server/Workstation	TP 419040-001 Rev F

marquette
A GE Medical Systems Company

assembly procedure

title: **MUSE FILE SERVER**

revision section

rev	effective date	section changed	reason for change
A	25 Aug 1999	RELEASE	

approval section for revision #	A	Page 1 of 34	
revision author:	Leon Milbeck	date	08/18/1999
design engineering:	Bob Mich	date	08/25/1999
manufacturing engineering:	Craig R. Weiss	date	08/24/1999

originator: Leon Milbeck **date:** 18 August, 1999

MUSE FILE SERVER

Table of Contents

SECTION	TITLE	PAGE
1.	PURPOSE	3
2.	SCOPE	3
3.	RELATED DOCUMENTS	3
4.	EQUIPMENT REQUIRED	3
5.	SPECIAL CONDITIONS	3
6.	COMPAQ DRIVE ARRAY INITIALIZATION – **COMPAQ SERVER ONLY**	3
7.	IMAGECAST PROCEDURE	6
8.	NETWORK SETUP **– PRIMARY DOMAIN CONTROLLER ONLY**	6
9.	NETWORK SETUP **– MEMBER SERVER ONLY**	7
10.	INSTALL SHIELD APPLICATION	9
11.	SYSTEM TWEAKS	11
12	INSTALLING NETWORK PRINTER SUPPORT	19
14.	UPS INSTALLATION – **COMPAQ FILE SERVER WITH UPS ONLY**	21
15.	MUSEWEB INSTALLATION	23
16.	MUSE MAIL MESSAGING INSTALLATION	24
17.	MUSEUP	26
18.	CONVERSION INSTALLATION	26
19.	OPTIONS DISK INSTALLATION	26
20.	CATH LAB INSTALLATION ONLY	27
21.	MAC-LAB INSTALLATION ONLY	27
22.	ACC DATA EXPORT INSTALLATION ONLY	27
23.	INVENTORY MANAGEMENT AND SCHEDULE BOARD INSTALLATION ONLY	27
24.	TFTP SERVER INSTALLATION ONLY	28
25.	TESTING	28
26.	CONVERSION FINAL CHECKOUT	28
27.	CLEANUP	28
28.	CREATING AN EMERGENCY REPAIR DISK	29
29.	TAPE BACKUP	29
30.	REMOVE TEMPORARY USERS – **MEMBER SERVER ONLY**	31
31.	SET SCREEN RESOLUTION – **COMPAQ FILE SERVER ONLY**	32
32.	SHUTDOWN FILE SERVER	32
33.	CONFIGURING COMPAQ UPS – **COMPAQ FILE SERVER WITH UPS ONLY**	32
34.	APPENDIX	34

1. PURPOSE

This procedure is intended as a guideline for the Software assembly of the following MUSE products:

MUSE Redwood Tower File Server 900124-701
MUSE Venus Tower File Server.....900124-6XX
MUSE Raid File Server.....421519-1XX

2. SCOPE

This document applies to the GE Marquette Medical Systems (GEMMS) – Milwaukee manufacturing operation.

3. RELATED DOCUMENTS

MUSE Network Series Manual
QS1004.....Product Burn-In Guidelines
QS1003..... Quality Assurance Device History Record Guidelines
TP-MUSE 5A.....MUSE 5A Test Procedure

4. EQUIPMENT REQUIRED

All equipment is "OR EQUIVALENT"

Complete MUSE Tower File Server Customer Order
MUSE Software CD 5A..... 420858–001
MUSE Software CD 5B..... 422436–001
Compaq SmartStart CD..... 421586–003
Compaq Management CD..... 421854–003
MUSE MFG Tooling CDs .....S1404 – S1406
Boot Disk.....S1407
MUSE File Server Configurator.....S1408

5. SPECIAL CONDITIONS

None.

6. COMPAQ DRIVE ARRAY INITIALIZATION **– COMPAQ Server ONLY**

NOTE: Perform this section only if you are installing a Compaq File Server. If not, go to "IMAGECAST PROCEDURE" section.

6.1. Power–up the system.

6.2. Load the Compaq SmartStart CD into the CD–ROM drive immediately after power–up.

NOTE: The SmartStart CD is a bootable CD. The system will boot–up using this CD to run the initial setup utilities.

6.3. **<F1>** to continue.

6.4. Left click "Run System Erase Utility" icon, left click **OK**.

6.5. At the “Warning” prompt left click **Yes**.

NOTE: SmartStart will now erase any previous system setup.

6.6. At the “System has been erased. Cycle system power now” screen, cycle power on the system.

NOTE: The system will again boot–up from the SmartStart CD in order to continue with the initial setup.

6.7. At the Language selection screen, left click the **English** button.

6.8. At the Country/Time Selection screen, verify “United States” is selected for both the country and the keyboard, set the appropriate Date and Time according to where the system is going, left click **Next**.

NOTE: PM time should be entered in Military (24) time.

6.9. At the Systems Settings Summary screen left click **Continue**.

6.10. At the SmartStart License Screen left click the “I Agree” check box, left click **OK**.

6.11. At the SmartStart Path Screen left click the “Manual Configuration” installation path radio button, left click **Begin**.

6.12. At the Operating System Settings screen left double–click the “Microsoft” folder and left click the “Microsoft Windows NT Server version 4.0 – English” check box.

NOTE: This is the first check box under the Microsoft folder.

6.13. Left click **Next**.

6.14. Left click **Continue**.

6.15. Verify “Continue with SmartStart” is selected. **<ENTER>**

6.16. At the “Reboot” screen. **<ENTER>**

6.17. At the “Unconfigured Controller” screen left click **Next**.

6.18. At the “Operating System Settings” screen verify “Microsoft Windows NT 3.5X, 4.0 or later” is selected, left click **Next**.

6.19. Verify “**(RAID 5)…**” radio button is selected, and the “Use Online Spare” check box is selected, left click **Next**.

6.20. Left click **Next** to accept the configuration.

6.21. Left click **Done**.

6.22. Left click **Controller >> Save Configuration**.

6.23. Left click **Controller** >> **Exit**.

NOTE: The system will reboot and automatically run through some configuration setups for a minute or two before the next step.

6.24. At the “Disk Builder” screen left click **Next**.

6.25. Remove the SmartStart CD from the CD–ROM drive.

NOTE: Since the SmartStart CD is a bootable CD, it must be **removed** from the CD–ROM drive. If it is only ejected from the CD–ROM drive and the system is subsequently rebooted, the CD–ROM drive will automatically reload any CD that has not been removed from the drive when it initializes at boot time.

6.26. Left click **Continue** to begin the operating system setup. The system will reboot.

6.27. Configuring the KVM Switch Box **– COMPAQ SERVER RACK ONLY**

6.27.1. <**Print Scrn**> to access the Console Configuration Reporting (CCR) interface.

6.27.2. At the “CCR Selection” screen <**F2**>

6.27.3. Press the <**RIGHT**> arrow key to move the highlight to the setup menu.

6.27.4. Using the <**UP**> and <**DOWN**> arrow keys, move the highlight to **NAMES**. <**ENTER**>

6.27.5. With the highlight on the **Port1** name (“COMPUTER 1” by default), type **FILE SERVER**.

6.27.6. <**ENTER**> to save the new name.

6.27.7. Using the <**UP**> and <**DOWN**> arrow keys, move the highlight to **FLAG**. <**ENTER**>

6.27.8. At the “Flag Attributes” screen, highlight the **Enabled** setting and change it to “NAMES TIMED” by using the <+> and <–> keys to adjust the value.

6.27.9. <**ENTER**> to save the changed value.

6.27.10. <**ESC**> to exit CCR.

7. IMAGECAST PROCEDURE

7.1. Perform the following based on the File Server:

> **PRIMARY DOMAIN CONTROLLER ONLY**
>
> If File Server is attached to the backbone, remove network cable from the NIC card to ensure that the File Server is **NOT** attached to the network.
>
> **MEMBER SERVER ONLY**
> Make sure that the File Server is attached to the backbone.

7.2. Insert into Tooling floppy S1407 into floppy drive and power up.

7.3. Insert appropriate S1404 – S1406 Tooling CD into CD-ROM drive.

7.4. At the DOS prompt, follow prompts to choose which platform you are installing, select accordingly **<ENTER>**

7.5. At the blue "ImageCast IC3 Client…" screen, once the system starts copying data, remove the floppy.

7.6. System will take approximately 7-9 minutes to complete the process. It will reboot twice and then present you with the Windows NT logon. Remove the MUSE MFG Tooling CD.

8. NETWORK SETUP **– PRIMARY DOMAIN CONTROLLER ONLY**

NOTE: Perform this section only if you are installing a Primary Domain Controller. If not, goto "NETWORK SETUP – MEMBER SERVER ONLY" section.

8.1. Press **<CTRL><ALT><DEL>** to access logon prompt.

Logon as the following:

User Name:.....**MuseAdmin**
Password: .....**Muse!Admin**
Domain Redwood.....**MUSEHOSPITAL**
Domain Compaq ..... **MUSECOMPAQ**

NOTE: Password is Case sensitive … type in exactly.

8.2. Perform the following based on the File Server:

> **COMPAQ FILE SERVER**
>
> Compaq Insight Manager needs to be running at all times. Minimize the application whenever you restart or reboot the system.

8.3. Right click **Network Neighborhood** icon to access menu and left click **Properties**.

8.4. Left click **Change** button.

8.5. At the "Identification Changes" window, type in the following:

Computer Name ..... **MUSE$$$XXX**
Domain Name..... **MUSE$$$**

NOTE: Password is Case sensitive **…** **<u>type in exactly</u>**.

8.6. Left click **OK**.

8.7. At the "Network Configuration" prompt, left click **OK**.

8.8. At the "Warning" prompt, left click **Yes**.

8.9. At the "Network Configuration" prompt, left click **OK**.

8.10. Left click "Protocols" tab.

8.11. Left click **Properties**.

8.12. Left click "Specify an IP address" radio button.

8.13. Type in the following:

IP Address **128.9.9.1**
Subnet Mask **255.255.0.0**

8.14. Left click **OK**.

8.15. Left click **Close**.

8.16. At the "Network Settings Change" left click **Yes** to restart system.

9. NETWORK SETUP **– MEMBER SERVER ONLY**

NOTE: Perform this section only if you are installing a Member Server. If not, goto "INSTALL SHIELD APPLICATION" section.

9.1. If during the process the "Service Control Manager" error box appears, left click **OK** to close.

9.2. Press **<CTRL><ALT><DEL>** to access logon prompt.

9.3. Logon as the following:

User Name:..... **Administrator**
Password: ..... **Never!Mind**

Domain Redwood:..... **MUSEHOSPITAL001**
Domain Compaq **MUSECOMPAQ001**

NOTE: Password is Case sensitive … **<u>type in exactly</u>**.

9.4. Perform the following based on the File Server:

COMPAQ FILE SERVER

NOTE: Compaq Insight Manager needs to be running at all times. Minimize the application whenever you restart or reboot the system.

9.5. Right click **Network Neighborhood** icon to access menu and left click **Properties**.

9.6. Left click **Change** button.

9.7. At the "Identification Changes" window, the "Computer Name" edit field is highlighted. Type in the name of the File Server as it is called out on the Pre-Build.

NOTE: If no name is given use the convention **MUSE$$$001**. Where $$$ is the acronym of the hospital or organization that is buying the File Server.

9.8. Left click **OK**.

9.9. At the "Warning" prompt, left click **Yes**.

9.10. At the "Network Configuration" prompt, left click **OK**.

9.11. Left click **Change** button.

9.12. Left click "Workgroup:" radio button.

9.13. Left click the edit field. Type **WORKGROUP**.

9.14. Left click **OK**.

9.15. At the "Warning" prompt, left click **Yes**.

9.16. At the "Network Configuration" prompt, left click **OK**.

9.17. Left click **Close**.

9.18. At the "Network Settings Change" left click **Yes** to restart system.

9.19. If the "Service Control Manager" error box appears, left click **OK** to close.

9.20. Press **<CTRL><ALT><DEL>** to access logon prompt.

9.21. Logon as the following:

User Name:..... **Administrator**
Password: ..... **Never!Mind**

NOTE: Password is Case sensitive … **type in exactly**.

9.22. Right click **Network Neighborhood** icon to access menu and left click **Properties**.

9.23. Left click **Change** button.

9.24. Left click "Domain:" radio button. The edit field is presently filled with **DOMAIN**.

9.25. Left click the edit field and verify **MUSESIG**.

9.26. Left click "Create a Computer Account…" check box.

9.27. Type in the following:

User Name:.....**MuseAdmin**
Password: .....**Muse!Admin**

NOTE: Password is Case sensitive … **type in exactly.**

9.28. Left click **OK**.

9.29. At the "Network Configuration" prompt, left click **OK**.

9.30. Left click **Close**.

9.31. At the "Network Settings Change" left click **Yes** to restart system.

10. INSTALL SHIELD APPLICATION

10.1. Press **<CTRL><ALT><DEL>** to access logon prompt.

10.2. Logon as the following:

User Name:.....**MuseAdmin**
Password: .....**Muse!Admin**

Domain (PDC).....**MUSE$$$**
Domain (Member).....**MUSESIG**

NOTE: Password is Case sensitive … **type in exactly.**

10.3. If the "Service Control Manager" error box appears, left click **OK** to close.

10.4. Insert Tooling floppy S1408 into floppy drive.

10.5. Left click **Start >> Run**

10.6. Type **A:\SETUP.EXE** and left click **OK**.

10.7. At the "Welcome" screen, left click **Next**.

10.8. At the "Type of File Server" screen, left click the radio button which is appropriate for the File Server you are building.

10.9. Left click **Next**.

10.10. At the "User Information" screen fill in the following edit fields:

Name: .....**Hospital's Name**
Company: .....**Hospital's Organization**
Serial: ..... **XXXXXOEMXXXXXXXXXXXX**

NOTE: The Serial Number can be found on the NT 40 CD package. It must be entered in the format listed.

10.11. Left click **Next**.

10.12. At the "Adjust File Server and Domain Name" screen fill in the following fields:

File Server: .....**MUSE$$$XXX**
Domain: (PDC) .....**MUSE$$$**

NOTE: MUSE$$$ = Domain name.

Domain: (Member).....**MUSESIG**

NOTE: The domain field should already have **MUSESIG** typed in.

10.13. Left click **Next**.

10.14. At the "OFM Serial Number" screen fill in the following edit field:

Serial #: .....**XX-XXXX-XXXX-XXXX**

NOTE: The Serial Number can be found on the Open File Manager CD package. It must be entered in the format listed.

10.15. Left click **Next**.

10.16. At the "Adjust Area Code" screen fill in the following edit field:

Area Code:..... **XXX**

10.17. Left click **Next**.

10.18. At the "Adjust Time Zone" screen, left click the radio button which is appropriate for the time zone the File Server is going to.

10.19. Left click **Next**.

10.20. At the "User Count Administrator" screen, remove the IS floppy and insert the appropriate Btrieve floppy into the A: drive and left click **Add License**.

10.21. At the "License Increased" screen, left click **OK**.

10.22. Remove the Btrieve floppy and reinsert the IS floppy.

10.23. Left click **Close**.

10.24. At the “Btrieve Complete” prompt, left click **OK**.

10.25. Perform the following based on the File Server:

PRIMARY DOMAIN CONTROLLER INSTALL ONLY

10.25.1. At the “MUSE Services Complete” prompt, left click **OK**.

10.26. At the “Setup Complete” screen, remove the IS floppy and verify “Yes, I want to restart my computer now” radio button is selected. Left click **Finish** to restart the computer.

11. SYSTEM TWEAKS

11.1. Press **<CTRL><ALT><DEL>** to access logon prompt.

11.2. Logon as the following:

User Name:.....**MuseAdmin**
Password: .....**Muse!Admin**

Domain: (PDC) .....**MUSE$$$**
Domain: (Member).....**MUSESIG**

NOTE: Password is Case sensitive … **type in exactly**

11.3. Perform the following based on the File Server:

COMPAQ FILE SERVER

11.3.1. Under the “Device Name” section, right click **MUSECOMPAQ001** to highlight and activate menu.

11.3.2. Left click **Delete from >> List of All Devices**.

11.3.3. At the “Warning” prompt, left click **Yes**.

11.3.4. Minimize “Insight Manager” application.

11.4. Perform the following based on the File Server:

Redwood or Venus with more than One Hard Drive:

NOTE: If your system has two or three hard drives installed, perform this section. If not, goto "INCREASE LICENSE COUNT FOR NT – 20, 50 OR 100 ONLY" section.

11.4.1. Left click **Start** >> **Programs** >> **Administrative Tools** >> **Disk Administrator**.

11.4.2. Left click **OK**.

11.4.3. Left click **OK**.

.

11.4.4. Hold the **<Ctrl>** while left clicking the "D Drive" in Disk 0 and the "Free Space" in Disk 1. This will highlight both areas.

NOTE: If Disk 2 is applicable, highlight it also.

11.4.5. Left click **Partition** >> **Extend Volume Set**.

11.4.6. Verify that maximum size value is entered for logical drive. Left click **OK**. Both areas will turn yellow.

11.4.7. Left click **Partition** >> **Commit Changes Now**…

11.4.8. At the "Confirm" prompt, left click **Yes**.

11.4.9. At the "Confirm" prompt, left click **Yes**.

11.4.10. At the "Disk Administrator" left click **OK**.

11.4.11. At the "Disk Administrator" left click **OK**. System will restart.

NOTE: System will take approximately 45 minutes to an hour to complete this task.

11.5. INCREASE LICENSE COUNT FOR NT – 20, 50 OR 100 ONLY

NOTE: Most File Servers have a 10 (ten) user license setup. If the Sales Order calls out for more, complete this section to add more licenses. If not, goto "Adjust Date & Time" section.

11.5.1. Make sure you are logged in as **MuseAdmin**.

11.5.2. Left click **Start** >> **Settings** >> **Control Panel** >> **Services**

11.5.3. Left click "License Logging Service" to highlight.

11.5.4. Left click **Startup** and set the radio button to **MANUAL**.

11.5.5. Left click **OK**.

11.5.6. Left click **Start**.

11.5.7. Left click **Close**.

11.5.8. In the “Control Panel” window, left double-click **Licensing** icon.

11.5.9. Left click **Add License**.

11.5.10. In the “Quantity” field type in the amount of licenses you want to add. You already have 10 licenses logged in the system. If you want to add more, then you type in the extra amount that you need.

NOTE: If, for example, the Sales Order calls out for 20 licenses, you would then type in 10. Ten licenses plus 10 more equals twenty.

11.5.11. Left click **OK**.

11.5.12. At the “Per Server Licensing” prompt, left click “I agree that” radio button.

11.5.13. Left click **OK**.

11.5.14. Verify that the license count equals what the Sales Order calls out.

11.5.15. Left click **OK**.

11.5.16. In the “Control Panel” window, left double-click **Services** icon.

11.5.17. Left click “License Logging Service” to highlight.

11.5.18. Left click **Startup** and set the radio button to **DISABLED**.

11.5.19. Left click **OK**.

11.5.20. Left click **Close**.

11.5.21. Close “Control Panel” window.

11.6. Adjust Date & Time

11.6.1. Left click **Start >> Settings >> Control Panel >> Date/Time**

11.6.2. Adjust Date & Time / Time Zone accordingly to the area the File Server is going.

11.6.3. Left click **OK**.

11.6.4. Close “Control Panel” window.

11.7. Perform the following based on the File Server:

PDC SERVER INSTALL ONLY

11.7.1. Left click **Start** >> **Programs** >> **Administrative Tools (Common)** >> **Server Manager**

11.7.2. Under the "Type" field, find and left click the File Server that is **Windows NT Backup**.
NOTE: This will be either be MUSECOMPAQ001 or MUSEHOSPITAL001

11.7.3. Left click **Computer** >> **Remove from Domain**

11.7.4. At the "Server Manager" prompt, left click **Yes**.

11.7.5. At the "Server Manager" prompt, left click **OK**.

11.7.6. Close "Server Manager" window.

11.8. Verify Open File Manager.

11.8.1. Left click **Start** >> **Programs** >> **Open File Manager** >> **Open File Manager**

11.8.2. Left click **System** >> **Scan**

11.8.3. Left click the "+" to the left of the Domain in which the File Server is in:

PDC .....**MUSE$$$**
Member.....**MUSESIG**

11.8.4. You should now be able to see the File Server's Computer Name. Left click and verify a green Check mark by the side.

11.8.5. Left click **File** >> **Exit**.

11.9. Add client nodes to the File Server.

11.9.1. Left click **Start** >> **Programs** >> **Command Prompt**

11.9.2. At the "DOS prompt" window, type **CVUSER MuseXXX <ENTER>**

NOTE: XXX is the number of the node that you want to add. The corresponding password will be Muse!XXX. Repeat this step for as many users that you will have connecting to the File Server.

11.9.3. Type **Exit <ENTER>**

11.10. Change and update IIS Users.

11.10.1. Left click **Start** >> **Programs** >> **Administrative Tools (Common)** >> **User Manager for Domains**

11.10.2. Perform the following based on the File Server:

MEMBER SERVER INSTALL ONLY

11.10.2.1. Left click **User >> Select Domain…**

11.10.2.2. Type **MUSE$$$XXX** in the "Domain" edit field.

11.10.2.3. Left click **OK**.

NOTE: MUSE$$$XXX = File Server name.

11.10.3. Left click "IUSR_******001" to highlight it.

NOTE: This is the "Internet Guest Account"

11.10.4. Left click **User >> Rename**

11.10.5. In the "Change To:" edit field type in **IUSR_MUSE$$$XXX**

NOTE: MUSE$$$XXX = File Server name.

11.10.6. Left click **OK**.

11.10.7. Left click "IWAM_******001" to highlight it.

NOTE: This is the "Web Application Manager Account"

11.10.8. Left click **User >> Rename**

11.10.9. In the "Change To:" edit field type in **IWAM_MUSE$$$XXX**

NOTE: MUSE$$$XXX = File Server name.

11.10.10. Left click **OK**.

11.10.11. Left click **User >> Exit**

11.10.12. Left click **Start >> Programs >> Windows NT 4.0 Option Pack >> Microsoft Internet Information Server >> Internet Service Manager**

11.10.13. At the "Tip of the Day" window, left click **Close**.

11.10.14. In the left windowpane, left click **Internet Information Server** to highlight.

11.10.15. In the right windowpane, right click **MUSE$$$XXX** to activate menu and left click **Properties**.

NOTE: MUSE$$$XXX = File Server name.

11.10.16. In the "Master Properties" area, left click **Edit**.

11.10.17. Left click "Directory Security" tab.

11.10.18. In the “Anonymous Access and Authentication Control” box, left click **Edit**.

11.10.19. At the “Authentication Methods” window, left click **Edit**.

11.10.20. In the “User Name” edit field, type **IUSR_MUSE$$$XXX**

NOTE: MUSE$$$XXX = File Server name.

11.10.21. Left click **OK**.

11.10.22. Left click **OK**.

11.10.23. Left click **OK**.

11.10.24. Left click **OK**.

11.10.25. Left click **Console** >> **Exit**.

11.10.26. At the “Microsoft Management Console” prompt, left click **Yes**.

11.11. Adjust DCOMCNFG.

11.11.1. Left click **Start** >> **Run**

11.11.2. Type **DCOMCNFG**. Left click **OK**.

11.11.3. Select **MUSE-CV IMS CServer**. Left click **Properties**.

11.11.4. Left click “Security” tab.

11.11.5. At the “Use Custom Access Permissions” radio button area, left click **Edit**.

11.11.6. There will be 4 instances of “Account Unknown” shown. Left click **Remove** 4 times to remove all cases.

NOTE: Interactive and System should be visible.

11.11.7. Left click **Add**.

11.11.8. Left click “List Names From” and choose the local domain:

PDC .....**MUSE$$$***
Member.....**MUSE$$$XXX***

11.11.9. Left double-click **Muse Users** group.

11.11.10. Left click **Show Users**.

11.11.11. Left double-click **Administrator**.

11.11.12. Left double-click **IUSR_MUSE$$$XXX**.

11.11.13. Left double-click **IWAM_MUSE$$$XXX**.

11.11.14. Verify that the four new entries appear in the “Add Names” window.

11.11.15. Left click **OK**.

11.11.16. Left click **OK**.

11.11.17. At the “Use Custom Launch Permissions” radio button area, left click **Edit**.

11.11.18. There will be 3 instances of “Account Unknown” shown. Left click **Remove** 3 times to remove all cases.

NOTE: Interactive, Administrators and System should be visible.

11.11.19. Left click **Add**.

11.11.20. Left click “List Names From” and choose the local domain:

PDC .....**MUSE$$$***
Member.....**MUSE$$$XXX***

11.11.21. Left double-click **Muse Users** group.

11.11.22. Left click **Show Users**.

11.11.23. Left double-click **IUSR_MUSE$$$XXX**.

11.11.24. Left double-click **IWAM_MUSE$$$XXX**.

11.11.25. Verify that the three new entries appear in the “Add Names” window.

11.11.26. Left click **OK**.

11.11.27. Left click **OK**.

11.11.28. Perform the following based on the File Server:

PRIMARY DOMAIN CONTROLLER INSTALL ONLY

11.11.28.1. Left click “Identity” tab.

11.11.28.2. Verify “This User” radio button is selected.

11.11.28.3. In the “User” edit box, type **MUSE$$$\MUSEBkgnd**

NOTE: MUSE$$$ = domain name of File Server

11.11.29. Left click **OK**.

11.11.30. Left click **OK**.

11.12. Adjust pcAnywhere User.

11.12.1. Left click **Start** >> **Programs** >> **pcAnywhere32** >> **pcAnywhere**

11.12.2. Left click **BE A HOST PC**.

11.12.3. Right click on **MODEM** icon and left click **Properties**.

11.12.4. Left click "Callers" tab.

11.12.5. Verify "Use NT user privileges" radio button is selected.

11.12.6. Left double-click **Add User** icon.

11.12.7. Verify "User" radio button is selected. Left click **Next**.

11.12.8. In the "What domain…" pull down, select the **MUSE$$$XXX**.

NOTE: MUSE$$$XXX = File Server name.

11.12.9. In the "Select the account…" pull down, select **Administrator**.

11.12.10. Left click **Next**.

11.12.11. Left click **Finish**.

11.12.12. Left click **OK**.

11.12.13. Left click **Exit**.

11.13. Adjust Modem settings

11.13.1. Left click **Start** >> **Settings** >> **Control Panel** >> **Modems**

11.13.2. Left click **Properties**.

11.13.3. Left click "Connection" tab.

11.13.4. Left click **Advanced…**

11.13.5. Type in the "Extra Settings" edit box **ATM0**.

11.13.6. Left click **OK**.

11.13.7. Left click **OK**.

11.13.8. Left click **Close**.

11.13.9. Close "Control Panel" window.

12 INSTALLING NETWORK PRINTER SUPPORT

NOTE: Perform this section only if you are installing a Network Printer. If not, goto "INSTALLING LOCAL PRINTER SUPPORT" section.

12.1. Log in as **Administrator**.

12.2. Make sure that the MUSE Software CD is in the CD-ROM drive.

12.3. Left click **Start** >> **Settings** >> **Printers**

12.4. Left double-click icon **Add Printer**.

12.5. At the "Add Printer Wizard" screen, verify the radio button "My Computer" is selected. Left click **Next**.

12.6. Left click **Add Port**.

12.7. From the "Available Printer Ports" section, left click **LPR Port**.

12.8. Left click **New Port**.

12.9. Perform one of the following based on the File Server:

PRIMARY DOMAIN CONTROLLER INSTALL In the "Name or address…" edit field type **XXX.XXX.XXX.XXX** **NOTE**: XXX.XXX.XXX.XXX = the IP of the Printer.

MEMBER SERVER INSTALL In the "Name or address…" edit field type **$$$$$$$$$$** **NOTE**: **$$$$$$$$$$** = the name of the Printer based on Menu Printout.

12.10. In the "Name of printer or print…" edit field type **raw**.

12.11. Left click **OK**. Left click **Close**.

12.12. Left click **Next**.

12.13. Left click **Have Disk**.

12.14. Type **Z:\HPPRINT\NT** and left click **OK**.

12.15. Left click **HP LaserJet 4000 Series PS** in the "Printers" section.

12.16. Left click **Next**.

12.17. In the "Printer Name" section, type a unique name for the printer.

NOTE: Default name should suffice unless otherwise stated by Pre-Build Survey.

12.18. Left click **Next**.

12.19. Left click the radio button "Shared" and type in the edit a unique name.

NOTE: For one (1) printer, use **LJ4K01**. If more, increase number. Default name should suffice unless otherwise stated by Pre-Build Survey.

12.20. Left click **Next**.

12.21. Verify the radio button **Yes** is selected and left click **Finish** to print a test page.

12.22. If the page printed successfully, left click **Yes**.

12.23. Close all visible windows.

13. INSTALLING LOCAL PRINTER SUPPORT

NOTE: Perform this section only if you are installing a Local Printer. If not, goto "UPS INSTALLATION **– COMPAQ FILE SERVER WITH UPS ONLY**" section.

13.1. Log in as **Administrator**.

13.2. Make sure that the MUSE Software CD is in the CD-ROM drive.

13.3. Left click **Start >> Settings >> Printers**

13.4. Left double-click icon **Add Printer**.

13.5. At the "Add Printer Wizard" screen, verify the radio button "My Computer" is selected. Left click **Next**.

13.6. From the "Available Ports" section, left click the radio button that the printer is attached to.

13.7. Left click **Next**.

13.8. Left click **Have Disk**.

13.9. Type **Z:\HPPRINT\NT** and left click **OK**.

13.10. Left click **HP LaserJet 4000 Series PS** in the "Printers" section.

13.11. Left click **Next**.

13.12. In the "Printer Name" section, type a unique name for the printer.

NOTE: Default name should suffice unless otherwise stated by Pre-Build Survey.

13.13. Left click **Next**.

13.14. Left click the radio button "Shared" and type in the edit a unique name.

NOTE: For one (1) printer, use **LJ4K01**. If more, increase number. Default name should suffice unless otherwise stated by Pre-Build Survey.

13.15. Left click **Next**.

13.16. Verify the radio button **Yes** is selected and left click **Finish** to print a test page.

13.17. If the page printed successfully, left click **Yes**.

13.18. Close the "Printers" window.

14. UPS INSTALLATION **– COMPAQ FILE SERVER WITH UPS ONLY**

NOTE: Perform this section only if you are installing Compaq UPS. If not, goto "MUSEWEB INSTALLATION" section.

14.1. Make sure that the COMPAQ Management CD is in the CD-ROM drive.

14.2. Left click **Start** >> **Run**.

14.3. Type **Z:\CPQCPM\AGENTS\NT\ENG\SETUP.EXE** and left click **OK**.

14.4. At the "Compaq Power…" prompt, left click **Yes**.

14.5. Left click **Continue**.

14.6. Verify the "No" radio button is selected for the computer to be a part of a UPS group, left click **Continue**.

14.7. At the "Communications Port Selection" screen, verify the "Standard" radio button and **COM1** are selected. Left click **Continue**.

14.8. Set Shutdown Timing Options to the following:

Wink Time (Seconds)..... **60**
Power Failure Countdown Time (Minutes)..... **10**
Time Needed to Down System (Seconds)..... **90**

14.9. Left click **Continue**.

14.10. At the Install Path screen, left click **Continue**.

14.11. At the "The Compaq Power Management Software was successfully installed…" screen, left click **OK**.

14.12. Left click **OK** to the restart your computer prompt.

NOTE: System will not shut down at this time.

14.13. Left click **Start** >> **Run**.

14.14. Type **Z:\CPQCPM\INSIGHT\ENG\SETUP.EXE** and left click **OK**.

14.15. At the "Welcome" screen, left click **Next**.

14.16. At the "Choose Destination Location" screen, left click **Next**.

14.17. At the “Information” screen, left click **OK**.

14.18. Left click **OK** to Setup is complete.

14.19. Restart the system.

14.20. Logon as **MuseAdmin**.

14.21. Wait until the “Compaq Insight Manager” application starts up.

14.22. Under “Device Name”, locate **MUSE$$$XXX** and wait until it turns green. Left double–click it.

14.23. Left click the **Recovery** button.

14.24. Left click the **UPS** button.

14.25. Left click the **Alert Handling** button.

14.26. Left click “0 –$MACHINE is on battery…. shutdown in $MINUTES mins”

14.27. Right click the **mouse icon** next to “Disabled” text underneath the “Execute Command” text and left click **Set** from the popup menu.

NOTE: When you place the cursor over the text “Disabled” a mouse cursor will appear. When this happens, right click to activate **Set** popup menu.

14.28. Left click the “Execute Command” check box and type in the edit field **UPS.BAT SHUTMUSE**

14.29. Left click **Set**. System will now store data.

14.30. Select “2 –$MACHINE shutdown has been cancelled”

14.31. Right click the **mouse icon** next to “Disabled” text underneath the “Execute Command” text and left click **Set** from the popup menu.

NOTE: When you place the cursor over the text “Disabled” a mouse cursor will appear. When this happens, right click to activate **Set** popup menu.

14.32. Left click the “Execute Command” check box and type in the edit field **UPS.BAT CANCEL**

14.33. Left click **Set**. System will now store data.

14.34. After Insight Manager is finished storing data, left click **Close**.

14.35. At the “UPS MUSE$$$XXX” screen, left click **Close**.

14.36. At the “MUSE$$$XXX Recovery” screen, left click the **Environment** button.

14.37. Right click the **mouse icon** next to "Shut Down" text next to the "Degraded Action:" text and left click **Set** from the popup menu.

14.38. Verify "New Value" is set to "Continue"

14.39. Left click **Set**.

14.40. Left click **Close**.

14.41. At the "MUSE$$$XXX Recovery" screen, left click **Close**.

14.42. At the "Device – MUSE$$$XXX" screen, left click **Close**.

14.43. Left click **Start >> Programs >> Compaq System Tools >> Compaq Integrated Management Log Viewer**

14.44. Left click **Log >> Clear All Entries**

14.45. Left click **Clear.**

14.46. Left click **Yes.**

14.47. Close the "Compaq Integrated Management Log View" window.

15. MUSEWEB INSTALLATION

NOTE: Perform this section only if you are installing MUSEWEB. If not, goto "MUSE MAIL MESSAGING INSTALLATION" section.

15.1. Log in as **MuseAdmin**.

15.2. Make sure that the MUSE Software CD is in the CD-ROM drive.

15.3. Left click **Start >> Run**

15.4. Type **Z:\MUSE32\SETUP.EXE** and left click **OK**.

15.5. At the "Welcome" screen, left click **Next**.

15.6. At the "Software License Agreement" screen, left click **Yes**.

15.7. At the "Select MUSE CV System NODE Type" screen, verify that the "File Server" radio button is selected.

15.8. Left click **Next**.

15.9. At the "Select MUSE CV…" screen, uncheck the "MUSE CV Application" check box.

15.10. Left click "MUSE CV Web" check box.

15.11. Left click **Next**.

15.12. At the "Setup Complete" screen, left click **Finish**.

15.13. Left click **Start** >> **Run**

15.14. Type **Z:\ADOBE\AR32E301.EXE** and left click **OK**.

15.15. At the “This will install Adobe Acrobat…” screen, left click **Yes**.

15.16. At the “Welcome” screen, left click **Next**.

15.17. At the “License Agreement” screen, left click **Yes**.

15.18. At the “Destination Directory” screen, Left click **Next**.

15.19. At the “Setup Complete” screen, uncheck the “Display Acrobat Reader 3.01 Read Me file” check box, left click **Finish**.

15.20. Left click **OK** to the “Setup is complete” message.

16. MUSE MAIL MESSAGING INSTALLATION

NOTE: Check customer order to see if this is an ordered option. If Yes, install the following. If not, go to “MUSEUP” section.

16.1. Install the IIS 4.0 SMTP Server

16.1.1. Make sure that the MUSE Software CD is in the CD-ROM drive.

16.1.2. Left click **Start** >> **Programs** >> **Windows NT 4.0 Option Pack** >> **Windows NT 4.0 Option Pack Setup**.

16.1.3. Left click **Next**.

16.1.4. Left click **Add/Remove**.

16.1.5. Left double-click the “Internet Information Server (IIS)” in the “Components” list.

16.1.6. At the “Internet Information Server (IIS)” screen, left click the “SMTP Service” check box.

16.1.7. Left click **OK**.

16.1.8. Left click **Next**.

16.1.9. Left click **Next** to accept the default mailroot directory.

16.1.10. Left click **Finish**.

16.2. Configure the IIS 4.0 SMTP Server

16.2.1. Left click **Start** >> **Programs** >> **Windows NT 4.0 Option Pack** >> **Microsoft Internet Information Server** >> **Internet Service Manager**.

16.2.2. Left click “show tips on startup” to uncheck and left click **Close**.

16.2.3. In the left window pane, left click the "+" sign to the left of the "Internet Information Server" to open.

16.2.4. Left click the "+" sign to the left of "MUSE$$$XXX" to open.

16.2.5. Right click "Default SMTP Site" to access menu and left click "Properties."

16.2.6. Left click "Messages" tab and type in the following:

Maximum Message Size (kilobytes) **30000**
Maximum Session Size (kilobytes) **30000**

16.2.7. Left click "Delivery" tab and type in the following:

Smart Host .....**MUSESIG**

16.2.8. Left click "Directory Security" tab.

16.2.9. In the "Relay Restrictions" section, left click **Edit…**

16.2.10. Left click "Allowed to Relay" radio button.

16.2.11. Left click **OK**.

16.2.12. Left click **OK**.

16.2.13. Left click **Console** >> **Exit**.

16.2.14. Left click **Yes** to console settings.

16.2.15. Left click **Start** >> **Settings** >> **Control Panel** >> **Services**.

16.2.16. Make sure the following is set for the "Microsoft SMTP Service"

Startup..... **Automatic**
Status ..... **Started**

16.2.17. Left click **Close**.

16.2.18. Close "Control Panel."

16.3. Install EMWAC POP3 Server Software

16.3.1. Left click **Start** >> **Run**.

16.3.2. Type **Z:\POP3\INSTALL.BAT C:\WINNT** and left click **OK**.

16.3.3. At the "Does the MUSE File Server…" prompt, verify **NO** is highlighted and press. **<ENTER>**

16.3.4. At the "Registry Editor" prompt, left click **OK**.

17. MUSEUP

17.1. Make sure that you are logged in as **MuseAdmin**.

17.2. Make sure that the MUSE Software CD is in the CD-ROM drive.

17.3. Left click **Start** >> **Programs** >> **Command Prompt**

17.4. Type **Z:** **<ENTER>**

17.5. Type **CD\MUSEUP** **<ENTER>**

17.6. Type **INSTALL –U** **<ENTER>**

17.7. At the "License…" prompt, verify **Yes** **<ENTER>**

17.8. Type **EXIT** **<ENTER>**

17.9. Left click **Start** >> **Shut Down…**

17.10. Left click "Restart the computer?" radio button

17.11. Left click **Yes**. System will now restart.

18. CONVERSION INSTALLATION

Perform one of the following based on the Sales Order:

CONVERSION INSTALL ONLY Give system to the Conversion team. When they return it back to you, complete the rest of this Assembly Procedure.

NO CONVERSION OR NEW SYSTEM INSTALL ONLY Continue with this Assembly Procedure.

19. OPTIONS DISK INSTALLATION

19.1. Make sure that you are logged in as **MuseAdmin**.

19.2. Start MUSE by left double–clicking on icon **Start MUSE CV**

19.3. Left click **System** >> **System Setup**.

19.4. Left click **System** >> **Install Options**.

19.5. Copy "Authorization Code" and proceed to MUSE Options station to set up the Options Disk #419719–001.

19.6. Once completed, insert Options disk into floppy drive and left click **Install**.

19.7. Verify "Registered Name" and "Installed Options List" data to be correct.

19.8. Remove floppy.

19.9. Close MUSE application and restart NT.

20. CATH LAB INSTALLATION ONLY

NOTE: Check customer order to see if this is as an ordered option. If Yes, install the following. If not, go to next section.

20.1. Cath options must be turned on via the Options disk.

20.2. The file "**APPLIST.ASC**" must be edited and the "**!**" in front of **Configure Cath Lists…** must be removed.
The file "**BACKTASK.ASC**" must be edited and the "**;**" in front of **324,\\MUSE$$$XXX** must be removed.

21. MAC-LAB INSTALLATION ONLY

NOTE: Check customer order to see if this is as an ordered option. If Yes, install the following. If not, go to next section.

21.1. Share Drive for access.

21.1.1. Left click **Start >> Run**

21.1.2. Type **Z:\MUSEDB\MLABADD.BAT** and left click **OK**.

21.2. The file "**APPLIST.ASC**" must be edited and the "**!**" in front of **MAC-LAB Assistant…** must be removed.

22. ACC DATA EXPORT INSTALLATION ONLY

NOTE: Check customer order to see if this is as an ordered option. If Yes, install the following. If not, go to next section.

22.1. ACC options must be turned on via the Options disk.

22.2. The file "**APPLIST.ASC**" must be edited and the "**!**" in front of **ACC Data Export…** must be removed.

23. INVENTORY MANAGEMENT AND SCHEDULE BOARD INSTALLATION ONLY

NOTE: Check customer order to see if this is as an ordered option. If Yes, install the following. If not, go to next section.

23.1. Inventory Management option must be turned on via the Options disk.

23.2. Schedule Board option must be turned on via the Options disk.

23.3. The file "**BACKTASK.ASC**" must be edited and the "**;**" in front of **612,1,1** must be removed. Also, the "1,1" must be changed to the number of the client that will running it.

NOTE: Only one instance of **612** can be activated on a networked system.

24. TFTP SERVER INSTALLATION ONLY

NOTE: Check customer order to see if a Gateway client is to be installed. If Yes, install the following. If not, go to next section.

24.1. The file "**BACKTASK.ASC**" must be edited and the line **325,1,1** must be added. Also, the "1,1" must be changed to the number of the client that will running it.

24.2. The file "**BACKTASK.ASC**" must be edited and the **340,1,1** must be added. Also, the "1,1" must be changed to the number of the client that will running it.

25. TESTING

At this point, the install of the MUSE File Server is complete. Complete any necessary client installations and start the overall testing using TP MUSE 5. After successful completion of the TP, return to this point and complete this AP.

26. CONVERSION FINAL CHECKOUT

Perform one of the following based on the Sales Order:

CONVERSION INSTALL ONLY
Give system to the Conversion team. When they return it back to you, complete the rest of this AP.

NO CONVERSION OR NEW SYSTEM INSTALL ONLY
Continue with this AP.

27. CLEANUP

27.1. Emptying Recycle Bin.

27.1.1. Make sure that you are logged in as **MuseAdmin**.
27.1.2. Right click on **Recycle Bin** icon.
27.1.3. Select "Empty Recycle Bin"
27.1.4. Left click **Yes**.
27.1.5. Reboot.

27.2. Disk Maintenance.

27.2.1. Make sure that you are logged in as **MuseAdmin**.

27.2.2. Left click **Start** >> **Programs** >> **Diskeeper** >> **Diskeeper**.

27.2.3. Close "Welcome" window.

27.2.4. Left click **Defragment** >> **Select Disk**.

27.2.5. Left click C:[NTFS].

27.2.6. Left click **OK**.

27.2.6.1. Process will now start and may take 5-10 minutes.
27.2.6.2. Let click **OK** when done.

27.2.7. Left click **Defragment** >> **Select Disk**.

27.2.8. Left click D:[NTFS].

27.2.9. Left click **OK**.

27.2.9.1. Process will now start and may take 5-10 minutes.
27.2.9.2. Left click **OK** when done.

27.2.10. Left click **Advanced Tools** >> **Boot-Time Defragmentation**.

27.2.11. Left click C:[NTFS]. Left click "**Directory Consolidation**" check box. Left click **Set**. Verify Directory Consolidation Set.

27.2.12. Left click D:[NTFS]. Left click "**Directory Consolidation**" check box. Left click **Set**. Verify Directory Consolidation Set.

27.2.13. Left click **Close**.

27.2.14. At the "Diskeeper" prompt, left click **OK**, left click **OK**.

27.2.15. Close "Diskeeper" window.

27.2.16. Reboot system.

NOTE: This process will reboot your system a few times. Wait until you get a logon screen before continuing.

28. CREATING AN EMERGENCY REPAIR DISK

28.1. Make sure that you are logged in as **MuseAdmin**.

28.2. Insert a floppy into A: drive

28.3. Select **Start** >> **Run**

28.4. Type **RDISK /S**. Left click **OK**.

28.5. At the "Setup can create an Emergency Repair disk..." Screen, left click **Yes**.

28.6. At the "Label a floppy disk..." screen, left click **OK**.

28.7. At the "Windows NT repair information contains..." screen, left click **OK**.

28.8. Remove the floppy, date and label it as **MUSE$$$XXX Emergency Repair Disk**

29. TAPE BACKUP

29.1. Make sure that you are logged in as **MuseAdmin**

29.2. Left click **Start** >> **Programs** >> **MUSE CV Info System** >> **Integrated Maintenance Suite** >> **Manual Backup**

29.3. Insert "MONDAY" tape.

29.4. Left click **Normal Daily**. Backup process will start.

29.5. Left click **Start >> Programs >> MUSE CV Info System >> Integrated Maintenance Suite >> Manual Backup**

29.6. Insert "MONTHLY SERVICE" tape.

29.7. Left click **Monthly Backup**. Backup process will start.

NOTE: Check MUSE error log to verify backups ran correctly.

29.8. **CONVERSION INSTALL ONLY**

29.8.1. Left click **Start >> Programs >> MUSE CV Info System >> Integrated Maintenance Suite >> Advanced**

29.8.2. Insert "CONVERSION" tape.

29.8.3. Left click **Backup Archive >> Do Manual Backup**

29.8.4. Highlight all volumes.

29.8.5. Left click **OK**. Backup process will start.

NOTE: If volumes are large enough this process may ask for multiple tapes to be inserted.

29.8.6. Upon completion, give tape to Conversion and let them visually inspect the system.

29.8.7. Multiple Archived Volumes

NOTE: Complete this section only if there are more then two volumes.

NOTE: Vol0 and Vol[with the greatest number] should not be selected. They are both active and will be done in the Daily Tape process. Only select the Vol's that are in between these two. They are not active and will not be backed up unless told to do so. Also, for **every additional volume,** you must have **two** extra tapes that must be added to the sales order as separate line items.

For example, if you have the following scenario:
Vol0 → Template Volume – will be backed up in Daily Tape. Do not select.
Vol1 → Archive Volume – You will create two [2] VOLUME 1 tapes and backup.
Vol2 → Archive Volume – You will create two [2] VOLUME 2 tapes and backup.
Vol3 → Active Volume – will be backed up in Daily Tape. Do not select.

29.8.7.1. Left click **Start >> Programs >> MUSE CV Info System >> Integrated Maintenance Suite >> Advanced**

29.8.7.2. Insert VOLUME X tape.

NOTE: X = the number of the volume.

29.8.7.3. Left click **Backup Archive** >> **Do Manual Backup**

29.8.7.4. Highlight the appropriate VolX.

29.8.7.5. Left click **OK**. Backup process will start.

29.8.7.6. Upon completion, remove tape, put in the second tape and repeat section. If there are more volumes to backup, like in the example, repeat this section. For every volume there should be two identical backup tapes that will be **SENT** to the customer.

30. REMOVE TEMPORARY USERS – **MEMBER SERVER ONLY**

Perform the following based on the Sales Order:

MEMBER SERVER

30.1. Log in as **Administrator**. In the "Domain" pull down box select **MUSE$$$XXX**

30.2. Left click **Start** >> **Programs** >> **Administrative Tools** >> **User Manager for Domains**.

30.3. Left double-click "MUSE Users" in bottom window.

Select all users and left click **Remove**.
Left click **OK**.

30.4. Left double-click "Administrators" in bottom window.

Select all users, except for Administrator, and left click **Remove**.
Left click **OK**.

30.5. Left double-click "Users" in bottom window.

Select all users, except the Administrator, and left click **Remove**.
Left click **OK**.

30.6. Left click **Policies** >> **User Rights**.

Left click check box "Show Advanced Users Rights"
Pull down "Right" menu, select **Log on as a Batch Job**.
Select "MUSE Background user and left click **Remove**.
Pull down "Right" menu, select **Log on as a Service**.
Select all users and left click **Remove**.
Left click **OK**.

30.7. Close "User Manager" window.

31. SET SCREEN RESOLUTION – **COMPAQ FILE SERVER ONLY**

Perform the following based on the Sales Order:

COMPAQ FILE SERVER

31.1. Left click **Start** >> **Settings** >> **Control Panel** >> **Display**

31.2. Left click "Settings" tab.

31.3. Change the "Desktop Area" to be set at **640 by 480**.

31.4. Left click **OK**.

31.5. At the "Display Settings" prompt, left click **OK**.

NOTE: The display will be noticeably larger.

31.6. Close Control Panel.

32. SHUTDOWN FILE SERVER

32.1. Left click **Start** >> **Shutdown**.

32.2. Verify "Shutdown the Computer?" radio button is selected.

32.3. Left click **Yes**.

32.4. At the "Shutdown Computer" prompt, power down the File Server.

33. CONFIGURING COMPAQ UPS – **COMPAQ FILE SERVER WITH UPS ONLY**

NOTE: Perform the following ONLY IF the UPS option is included with the system and then check (RAID Voltage Options located on Pre–build) to see if the UPS should be configured for **100**v, **220**v, or **240**v and perform the following.

If the UPS is domestic **120**v and does not need to be reconfigured for **100**v, **220**v, or **240**v, then skip this section.

33.1. Perform one of the following based on the (RAID Voltage Options):

CAUTION: DO NOT press the **OFF** button while the UPS is in configuration mode. Doing so places the unit in Standby mode and disconnects the load.

100 VAC UPS CONFIGURATION ONLY – JAPAN

Press the **ON** and **Test/Alarm Reset** buttons at the same time for one beep – see Figure 1–1. (The UPS is now in Configuration mode)

Press the **ON** button until the 100/208v function LED is selected – see Appendix Figure 1–1. (The UPS beeps as you scroll through each function LED and the selected function LED blinks.)

Press the **Test/Alarm Reset** button to turn the 100/208v function on. (The Function Status LED turns on when the function is on and off when the function is off.)

Press the **ON** and **Test/Alarm Reset** buttons at the same time to return to Operation mode. (Changes take effect immediately after returning to Operation mode.)

220 VAC UPS CONFIGURATION ONLY – FOREIGN

Press the **ON** and **Test/Alarm Reset** buttons at the same time for one beep – see Figure 1–1. (The UPS is now in Configuration mode)

Press the **ON** button until the 110/220v function LED is selected – see Appendix Figure 1–1. (The UPS beeps as you scroll through each function LED and the selected function LED blinks.)

Press the **Test/Alarm Reset** button to turn the 110/220v function on. (The Function Status LED turns on when the function is on and off when the function is off.)

Press the **ON** and **Test/Alarm Reset** buttons at the same time to return to Operation mode. (Changes take effect immediately after returning to Operation mode.)

240 VAC UPS CONFIGURATION ONLY – FOREIGN

Press the **ON** and **Test/Alarm Reset** buttons at the same time for one beep – see Figure 1–1. (The UPS is now in Configuration mode)

Press the **ON** button until the 127/240v function LED is selected – see Appendix Figure 1–1. (The UPS beeps as you scroll through each function LED and the selected function LED blinks.)

Press the **Test/Alarm Reset** button to turn the 127/240v function on. (The Function Status LED turns on when the function is on and off when the function is off.)

Press the **ON** and **Test/Alarm Reset** buttons at the same time to return to Operation mode. (Changes take effect immediately after returning to Operation mode.)

34. APPENDIX

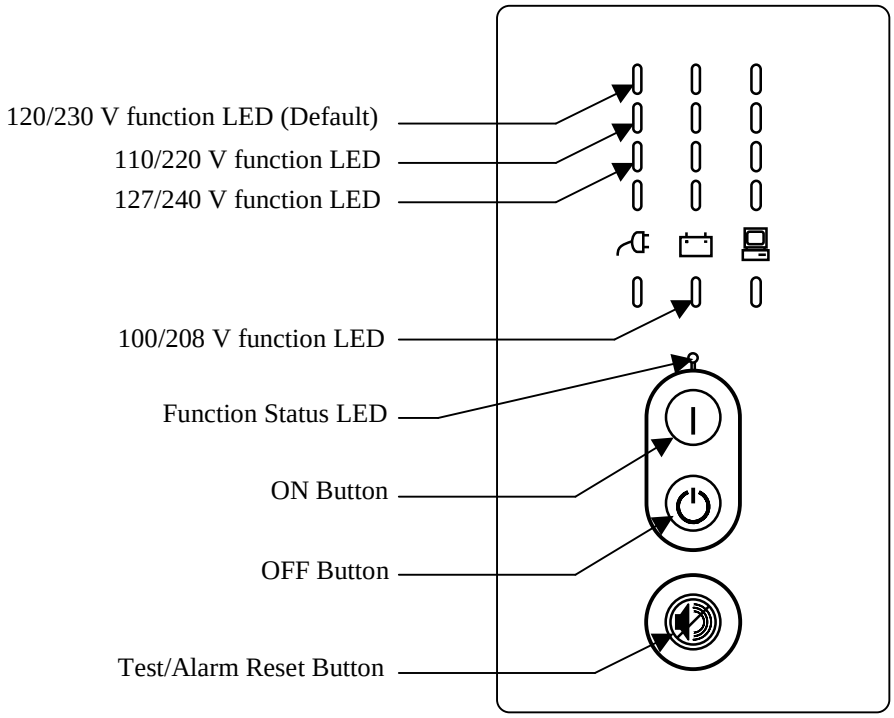

Figure 1-1. UPS Button and LED Function in Configure Mode

marquette
A GE Medical Systems Company

AP 900124-701
REV T

assembly procedure

title: **MUSE TOWER FILE SERVER**

revision section

rev	effective date	section changed	reason for change
			Please see Rev. H for previous coversheet listings.
J	30 Oct 1998	7, 30	Added line and new Section number to handle new BIOS on systems that are newer than update disk. Section 30 added back into procedure (had been deleted by mistake).
K	23 Nov 1998	8.7, 9.1.1.10, 9.1.2.5, 9.6.10..... 10.1, 17.1, 17.2.1, 22, 23	Deleted sections 8.7, 9.6.10, 17.2 & 17.3. Changed site of C-drive; modified licensing structure for NT; changed directory structure, changed UPS model name; modified which CD pcAnywhere is used; added step to insert MUSE software CD.
L	21 Dec 1998	16, 16.5, 16.9, 26.2.10 through 26.2.12, 26.2.14	Changed sections to handle new version 4.0 of Diskeeper install process.
M	15 Mar 1999	ALL	Changes implemented for revamp of MUSE CD.
N	30 Mar 1999	ALL	Changed all sections for MUSE 5B software addition.
P	07 May 1999	9.4.1, delete 16.14—16.19, 19	Added NOTE to handle third drive. Turn off Diskeeper defragmentation process. OFM Version 5.3 should be OFM Version 5.1 per RCA 05316.
R	03 Jun 1999	25.6 (added)	Section added to install Any Point releases in 5B
S	09 Jul 1999	ALL	Added NT4.0 SP4 and IE 4.01 SP2
T	29 Jul 1999	22, 24.3.7.....	Changed Section Title; Added new Install Shield prompt

approval section for revision #	T	Page 1 of 43	
revision author:	Leon Milbeck	date	07/13/1999
design engineering:	John Moehrke	date	07/29/1999
manufacturing engineering:	Leon Milbeck	date	07/29/1999

originator: Leon Milbeck **date:** 06 March 1998

MUSE TOWER FILE SERVER

Table of Contents

SECTION	TITLE	PAGE
1.	PURPOSE	3
2.	SCOPE	3
3.	RELATED DOCUMENTS	3
4.	EQUIPMENT REQUIRED	3
5.	SPECIAL CONDITIONS	3
6.	PROCEDURE	3
7.	UPGRADING THE BIOS TO VERSION 2.1	4
8.	SETTING BIOS VALUES	4
9.	WINNT40 (PRIMARY DOMAIN CONTROLLER AND MEMBER) SERVER INSTALLATION	4
10.	POWERVAR UPS SOFTWARE	14
11.	CONFIGURING ADMINISTRATOR DESKTOP	15
12.	MICROSOFT INTERNET INFORMATION SERVER 4.0 INSTALLATION	16
13.	INSTALLING NETWORK PRINTER SUPPORT	17
14.	INSTALLING LOCAL PRINTER SUPPORT	18
15.	DISKEEPER FOR WINDOWS NT SERVER 4.0 INSTALLATION	19
16.	PCANYWHERE32 8.0 INSTALLATION	20
17.	NT 4.0 SERVER RESOURCE KIT INSTALLATION	22
18.	ST. BERNARD'S OPEN FILE MANAGER VERSION 5.1 INSTALLATION	23
19.	BTRIEVE 7.0 INSTALLATION – **5B ONLY**	24
20.	BTRIEVE 6.15 INSTALLATION – **5A ONLY**	25
21.	VISUAL BASIC 4 INSTALLATION – **5A ONLY**	25
22.	MUSE MAIL MESSAGING INSTALLATION	26
23.	MUSE SOFTWARE INSTALLATION – **5A ONLY**	27
24.	MUSE SOFTWARE INSTALLATION – **5B ONLY**	29
25.	TESTING THE MUSE CV WEB INSTALLATION	31
26.	SETTING UP MUSE ENVIRONMENT	33
27.	CONFIGURING MUSEADMIN DESKTOP	38
28.	BURN-IN PROCEDURE	39
29.	CLEANUP	39
30.	CREATING AN EMERGENCY REPAIR DISK	40
31.	TAPE BACKUP	41
32.	REMOVE TEMPORARY USERS	42

1. PURPOSE

This procedure is intended as a guideline for the assembly of the following MUSE products:

MUSE Tower File Server.....900124-701

Based on what is called out on the customer order and the new OMAR structure, a technician will be able to reference this document in order to create a system with Windows NT40 as its operating system.

2. SCOPE

This document applies to the GE Marquette Medical Systems, Milwaukee manufacturing operation.

3. RELATED DOCUMENTS

3.1. .....MUSE Network Series Manual
3.2. QS1004.....Product Burn-In Guidelines
3.3. QS1003..... Quality Assurance Device History Record Guidelines
3.4. TP-MUSE 5A.....MUSE 5A Test Procedure
3.5. MF1348 ..... PC to PC MUSE & Conversion Check-off Sheet
3.6. MF1349 ..... DEC to PC MUSE & Conversion Check-off Sheet

4. EQUIPMENT REQUIRED

All equipment is "OR EQUIVALENT"

4.1. Complete MUSE Tower File Server Customer Order
4.2. MUSE QA Calibrated Test ECG(s) Diskettes MT-3561
4.3. Three SIGLAB 230VAC power cables (for 230VAC systems only)
4.4. MUSE Software CD 5A.....420858-001
4.5. MUSE Software CD 5B.....422436-001
4.6. Tool Disk.....S00171

5. SPECIAL CONDITIONS

The following test procedure will apply to both 115 VAC 50-60Hz systems as well as 230 VAC 50Hz systems.

6. PROCEDURE

6.1. Assembly of Vendor Equipment

6.2. Initial Set-up of Vendor Equipment

6.2.1. 100/115 VAC 50-60Hz Systems

Assemblies (115VAC 50-60Hz) - connect power cord supplied with computer and monitor to standard 115VAC 60Hz outlet.

6.2.2. 230 VAC 50Hz Systems

Assemblies (230VAC 50Hz) - connect SIGLAB 230VAC power cable to power connector on back of computer, monitor, and printer, then to 230VAC 50Hz power source.

6.2.3. Connect monitor signal cable to the video connector on back of computer.

6.2.4. Connect MICROSOFT Mouse into Mouse Connector port on back of computer.

6.2.5. If you are building a system with a Cybex KVM 2/4 port switch, connect all keyboard, mouse and monitor ports from the Server into the necessary slots on the switch.

7. UPGRADING THE BIOS TO VERSION 2.1

Note: Physically examine the present BIOS settings upon boot. If the value is greater than 2.1, DO NOT perform this section.

7.1. Insert Tool Disk S00171.
7.2. Boot computer.
7.3. At the A:\prompt, type **1**. **<ENTER>**
7.4. Wait until copy process completes. System will reboot automatically.
7.5. Remove the floppy.
7.6. **<F2>** to enter setup utility.
7.7. At the Bios Setup Utility Screen. **<F9>**
7.8. "Load default configuration now" Verify **Yes**. **<ENTER>**
7.9. **<F10>** "Save configuration changes and exit now!"
7.10. Verify **Yes**. **<ENTER>** System will now reboot.

8. SETTING BIOS VALUES

8.1. Boot system. **<F2>** to enter setup utility.
8.2. Set the appropriate “System Time” and “System Date.”
8.3. Go to “Boot” tab and set the “Boot Device Priority” to the following:

Diskette Drive
ATAPI CD-ROM Drive
Hard Drive
Removable Devices
Diagnostic Boot

8.4. **<F10>** "Save configuration changes and exit now!"
8.5. Verify **Yes**. **<ENTER>**
8.6. System will reboot.

9. WINNT40 (PRIMARY DOMAIN CONTROLLER AND MEMBER) SERVER INSTALLATION

9.1. Installing Windows NT Server 4.0

9.1.1. Boot Strapping

9.1.1.1. Boot up your system.

9.1.1.2. Load the Windows NT 4.0 Server compact disk into the CD-ROM drive.

9.1.1.3. At the “Welcome to Setup” screen. **<ENTER>**

9.1.1.4. At the “Setup has recognized the following mass storage devices...” screen. **<ENTER>**

9.1.1.5. At the “Setup has determined that one or more of your hard disks has more than 1024 cylinders...” screen. **<ENTER>**

9.1.1.6. At the “Setup has determined that your computer's startup hard disk...” screen, press **C**

9.1.1.7. At the “Windows NT Licensing Agreement” screen, <Page Down> repeatedly to read the license and **F8** to agree.

9.1.1.8. At the “Setup has determined that your computer contains the following...” screen. **<ENTER>**

9.1.1.9. Perform one of the following based on the amount of hard drives installed:

Two or more hard drives: Verify that on **ID0 on bus0** the text **Unpartitioned space** is highlighted. **Note:** The lower or second or third drive will be formatted at a later point. **Do not** select it.

9.1.1.10. At the “The list below shows existing partitions and space available...” screen, Press **C**

9.1.1.11. At the “You have asked Setup…” screen, **backspace** to clear the present entry and type **2048** to create a 2GB C drive. **<ENTER>**

9.1.1.12. At the “The list below shows existing partitions and space available...” screen, select “New (Unformatted)”. **<ENTER>**

9.1.1.13. At the “The partition you have chosen is newly created...” screen, select “Format the partition using the NTFS file system.” **<ENTER>** This will take approximately 5-7 minutes.

9.1.1.14. At the “Setup installs Windows NT files onto your hard disk...” screen. **<ENTER>**

Note: Verify that the default directory is **\WINNT**.

9.1.1.15. At the “Setup will now examine your hard disk(s)...” screen. **<ENTER>**

Note: Setup will now start copying files.

9.1.1.16. At the “This portion of Setup has completed...” screen, remove the Windows NT 4.0 CD from the CD-ROM drive. **<ENTER>**

Note: System will reboot twice to properly format all drives.

9.1.2. Gathering Information About Your Computer

9.1.2.1. Reinsert the Windows NT Server CD when prompted, wait One (1) minute, and click **OK**. Setup will copy files to your hard drive.

9.1.2.2. At the "Welcome to the Windows NT Setup Wizard..." screen, left click **Next** to begin "1) Gathering information about your computer".

9.1.2.3. At the "Name and Organization" screen, enter the hospital name in the **Name** Field. In the **Organization** field, enter the name of the organization the hospital is affiliated with, if the hospital is not affiliated with an organization, then enter the hospital name again. Left click **Next**.

9.1.2.4. When prompted, enter the CD key number from the certificate, Left click **Next**.

9.1.2.5. Verify the radio button "Per Server for" is selected and based on the number of Btrieve licenses purchased; select the appropriate number for "concurrent connections." Left click **Next**.

9.1.2.6. At the "Computer Name" screen, enter **MUSE$$$XXX** in the Name field - where $$$ is an acronym for the hospital and XXX is the MUSE node number of the computer.

Note: This value represents the name of the computer. Reference the Pre-Build Survey to verify this is correct.

9.1.2.7. Left click **Next**.

9.1.2.8. Perform one of the following based on the File Server:

PRIMARY DOMAIN CONTROLLER INSTALL ONLY

At the "Server Type" screen, select the "Primary Domain Controller" radio button. Left click **Next**.

MEMBER SERVER INSTALL ONLY

At the "Server Type" screen, select the "Stand-Alone Server" radio button. Left click **Next**.

9.1.2.9. At the "Administrator Account" screen, type in the password **Never!Mind** in both edit fields.

Note: The password is case sensitive.

9.1.2.10. Left click **Next**.

9.1.2.11. At the "Emergency Repair Disk" screen, select "No, do not create..." radio button. Left click **Next**.

9.1.2.12. At the “Select Components” screen do the following:

Note: The shortcut to selecting all features is to **Uncheck** the appropriate box and re-check the same box with a single left click**.** Do this slowly so you don't cause a double-click.

The “Accessibility Options” box should be empty.
The “Accessories” box should be white with a black check.
Verify that the “Communications” box is white with a black check.
The “Games” check box should be empty.
The “Multimedia” box should be white with a black check.
The “Windows Messaging” box will be gray with a black check after performing the following steps:
Left double-click the “Windows Messaging” text.

The “Windows Messaging” check box should be checked.
The “Internet Mail” check box should be checked.
The “Microsoft Mail” check box should be **Unchecked**.

Left click **OK.**

9.1.2.13. Left click **Next**.

9.1.3. Installing Windows NT Networking

9.1.3.1. At the “Setup is now ready to guide you through installation...” screen, Left click **Next** to begin “2) Installing Windows NT Networking”.

9.1.3.2. At the “Windows NT needs to know how this computer should participate on a network...” screen, verify “Wired to the network” is selected. Left click **Next**.

9.1.3.3. At the “Microsoft Internet Information Server lets you share...” screen, **Uncheck** the box “Install Microsoft Internet Information Server”. Left click **Next**.

9.1.3.4. At the “To have setup start searching for a network Adapter...” screen, Left click **Start Search**.

9.1.3.5. If the search succeeded in selecting the appropriate NIC card, left click **Next**.

9.1.3.6. At the “Select the networking protocols that are used...” screen, **Uncheck** all network protocols except for “TCP/IP Protocol”. Left click **Next**.

9.1.3.7. At the “Listed below are the service that will be installed...” screen, left click the **Select from list** button to add the following additional services.

Select “Microsoft TCP/IP Printing” and left click **OK**.
Select “Network Monitor Tools and Agent” and left click **OK**.

Left click **Next**.

9.1.3.8. At the “Windows NT is now ready to install networking components...” screen left click **Next**.

9.1.3.9. At the “Intel PROSET” window, left click **OK**.

9.1.3.10. Perform one of the following based on the File Server:

PRIMARY DOMAIN CONTROLLER INSTALL ONLY
At the “If there is a DHCP server on your network...” message box left click **No**.

At the “Microsoft TCP/IP Properties” window, fill in the following fields with the appropriate data
Note: Reference the Pre-build survey to verify these IP’s.

IP Address: **128.9.9.1**
Subnet Mask:..... **255.255.0.0**

Left click **OK**.

MEMBER SERVER INSTALL ONLY

At the “If there is a DHCP server on your network...” message box left click **Yes**.

Note: System must be attached to MEI network backbone.

9.1.3.11. At the “You may use this page to disable network bindings…” screen, left click **Next**.

9.1.3.12. Left click **Next** to start the network.

9.1.3.13. Perform one of the following based on the File Server:

Note: Reference the Pre-Build Survey to verify this is correct.

PRIMARY DOMAIN CONTROLLER INSTALL ONLY

At the “You have requested that Windows NT create a Primary Domain Controller…” screen, enter **MUSE$$$** (where $$$ is the acronym for the hospital) in the Domain field. Left click **Next**.

Note: This is the Domain name you are creating for the hospital. This may take a few minutes to register.

MEMBER SERVER INSTALL ONLY

At the “Select whether your computer will be participating in a workgroup or domain…” screen, Verify “Computer Name” is correct.

Left click “Domain” radio button.
Type **MUSESIG**
Left click on “Create a Computer Account in the Domain” check box.
Left click **Next**
In the “User Name” field, type **MuseAdmin**
In the “Password” field, type **Muse!Admin**

Left click **OK**

9.1.4. Finishing Setup

9.1.4.1. At the “Setup is almost finished...” screen, left click **Finish** to begin “3) Finishing Setup”.

9.1.4.2. At the “Date/Time Properties” property page set the date, time, and time zone appropriately to where the machine is going. Left click **Close**.

At the “Detected Display” message box, left click **OK** and configure your video as follows:

Color Palette ..... **256 colors**
Desktop Area ..... **1024 by 768 pixels**
Refresh Frequency ..... **75 Hertz**

9.1.4.3. Left click the **Test** button and verify the settings. Once the settings have been verified left click **OK**.

9.1.4.4. At the “Windows NT has been installed successfully...” screen, remove the Windows NT 4.0 Server CD from the CD-ROM drive.

9.1.4.5. Left click **Restart Computer**.

9.2. Move the CD drive letter to Z:

9.2.1. Log in as **Administrator**.

Note: You must press <CTRL><ALT><DEL> to logon.

Perform one of the following based on the File Server:

PRIMARY DOMAIN CONTROLLER INSTALL ONLY
In the “Domain” pull down box, select **MUSE$$$**

MEMBER SERVER INSTALL ONLY
In the "Domain" pull down box, select **MUSE$$$XXX**

Note: MUSE$$$XXX = Local Computer Name

9.2.2. Type for password **Never!Mind**

9.2.3. At the "Welcome" window left click **Close**

9.2.4. Left click **Start** >> **Programs** >> **Administrative Tools** >> **Disk Administrator**.

9.2.5. Left click **OK** if its the first time its been used.

9.2.6. Left click the "CD-ROM 0" box.

Note: Present drive letter is D:

9.2.7. Left click **Tools** >> **Assign Drive Letter**.

9.2.8. Pull down "Assign Drive Letter" and select **Z:** and left click **OK**.

9.2.9. Left click **Yes** to the "This new drive letter will happen immediately dialog."

9.3. Partition and formatting One (1) D: drive

Note: If you are installing a system with more than one hard drive installed, skip this section and go to the next section "Partition and formatting Two or Three D: drives."

9.3.1. Left click "Free Space" area in Disk 0.

9.3.2. Left click **Partition** >> **Create Extended**.

9.3.3. Left click **OK**. Left click **Yes**.

9.3.4. Left click "Free Space" area in Disk 0.

9.3.5. Left click **Partition** >> **Create**.

9.3.6. Verify that maximum size value is entered for logical drive. Left click **OK**.

9.3.7. Left click **Partition** >> **Commit Changes Now…**

9.3.8. At the "Changes have been made to your hard disk configuration…" screen, left click **Yes**.

9.3.9. At the "Disks were updated successfully" screen, left click **OK**.

9.3.10. Left click the "D:" unknown area in Disk 0.

9.3.11. Left click **Tools** >> **Format**.

9.3.12. Pull down "File System" and select "NTFS".

9.3.13. Left click **Start**.

9.3.14. Left click **OK** to "Warning…"

Note: Formatting the D: drive can take in excess of 20 minutes.

9.3.15. Left click **OK** to "Format complete."

9.3.16. Left click **Close**.

9.3.17. Close "Disk Administrator" window.

9.4. Partition and formatting Two or Three D: drives

9.4.1. Hold the **<Ctrl>** while left clicking the "Free Space" in Disk 0 and the "Free Space" in Disk 1. This will highlight both areas.

Note: If Disk 2 is applicable, highlight it also.

9.4.2. Left click **Partition >> Create Volume Set**.

9.4.3. Verify that maximum size value is entered for logical drive. Left click **OK**. Both areas will turn yellow.

9.4.4. Left click **Partition >> Commit Changes Now**…

9.4.5. At the "Confirm" prompt, left click **Yes**.

9.4.6. At the "Confirm" prompt, left click **Yes**.

9.4.7. At the "Disk Administrator" left click **OK**.

9.4.8. At the "Disk Administrator" left click **OK**. System will restart.

9.4.9. Logon as Administrator.

9.4.10. At the "Welcome" window, uncheck the "Show this welcome…" box and left click **Close**.

9.4.11. Left click **Start >> Programs >> Administrative Tools >> Disk Administrator**.

9.4.12. Left click the yellow colored "D:" unknown area in Disk 0.

9.4.13. Left click **Tools >> Format**.

9.4.14. Pull down "File System" and select "NTFS".

9.4.15. Left click **Start**.

9.4.16. Left click **OK** to "Warning…"

Note: Formatting the D: drive can take in excess of 20 minutes.

9.4.17. Left click **OK** to "Format complete"

9.4.18. Left click **Close**.

9.4.19. Close “Disk Administrator” window.

9.5. Disable CD Autoplay and Update NT Source Path

9.5.1. Insert the MUSE Software CD in CD-ROM drive.

9.5.2. Left click **Start** >> **Run**.

9.5.3. Type **REGEDIT Z:\REG\CD_CHNGS.REG** and left click **OK**.

9.5.4. Left click **OK** at the Registry Editor message box.

9.5.5. Remove the MUSE Software CD

9.6. Installing Tape Device

9.6.1. Insert the Windows NT 4.0 Server CD. If the “Windows NT CDROM” screen appears, close the window.

9.6.2. Left click **Start** >> **Settings** >>**Control Panel** >> **Tape Devices**.

9.6.3. At the “New SCSI Tape Device Found” message box, left click **OK**. Files will be copied to the system.

9.6.4. At the “Tape Devices” property page, verify HPC1537A is selected, left click **OK**.

9.6.5. Close “Control Panel” window.

9.6.6. Remove the Windows NT 4.0 Server CD from the CD-ROM drive.

9.7. Installing Windows NT Server 4.0 SP4 and Microsoft Data Access Components 2.0 SP1

9.7.1. Insert the MUSE Software CD is in the CD-ROM drive.

9.7.2. Left click **Start** >> **Run**.

9.7.3. Type **Z:\BAT\SP4MDAC.BAT** and left click **OK**.

Note: System will automatically copy files and setup apps.

9.7.4. At the “Microsoft Windows Year 2000…” prompt, left click **Yes** to restart system.

9.8. Installing Internet Explorer 4.01 SP2

9.8.1. Log in as **Administrator**.

9.8.2. At the “Welcome” window, uncheck the “Show this welcome…” box and left click **Close**.

9.8.3. Left click **Start** >> **Run**.

9.8.4. Type **Z:\BAT\IE401SP2.BAT** and left click **OK**.

Note: System will automatically copy files, setup apps and restart system.

9.9. Setting up the environment

9.9.1. Log in as **Administrator**.

9.9.2. Close the "Welcome – Microsoft Internet Explorer" window.

9.9.3. Enable Schedule Service to startup automatically and stop Licensing.

9.9.3.1. Left click **Start** >> **Settings** >> **Control Panel** >> **Services**.
9.9.3.2. Left click on "Schedule".
9.9.3.3. Left click **Startup** and set the radio button **AUTOMATIC**.
9.9.3.4. Left click **OK**.
9.9.3.5. Left click on "License Logging Service"
9.9.3.6. Left click **Startup** and set the radio button **DISABLED**.
9.9.3.7. Left click **OK**.
9.9.3.8. Left click **Close**.

9.9.4. Turn off debugging.

9.9.4.1. Left double-click the icon **System**.

9.9.4.2. Left click "Startup/Shutdown" tab.

9.9.4.3. Left click to uncheck the "Write debugging information to:" check box.

9.9.4.4. Left click **OK**.

9.9.4.5. Left click **NO** at the "System settings change" window.

9.9.5. Set the computer description

9.9.5.1. Left double-click the icon **Server**.

Perform one of the following based on the File Server:

PRIMARY DOMAIN CONTROLLER INSTALL ONLY

In the "Description" edit box type **MUSE$$$ PDC (MUSE File Server)**

Note: Where "MUSE$$$" is the name of the Primary Domain that was created during the NT network setup.

MEMBER SERVER INSTALL ONLY

In the "Description" edit box type **MUSE File Server**

9.9.5.2. Left click **OK**.

9.9.5.3. Close "Control Panel" window.

9.9.6. Turn on Auditing

9.9.6.1. Left click **Start** >> **Programs** >> **Administrative Tools** >> **User Manager for Domains**.

9.9.6.2. Left click **Policies** >> **Audit**.

9.9.6.3. Left click the radio button "Audit these Events."

9.9.6.4. Fill out the matrix as follows:

	SUCCESS	FAILURE
Logon on Logoff		X
File and Object Access		
Use of User Rights		
User and Group Management		X
Security Policy Changes	X	X
Restart, Shutdown, and System	X	X
Process Tracking		X

9.9.6.5. Left click **OK** and close "User Manager" window.

10. POWERVAR UPS SOFTWARE

Note: The following condition must be met before continuing on with this section:
A UPS attached with proprietary cord to COM1 of the server.

10.1. Install main software

10.1.1. Make sure the MUSE Software CD is in the CD-ROM drive.

10.1.2. Left click **Start** >> **Run**.

10.1.3. Type **Z:\LANSAFE\V40\SETUP.EXE** and left click **OK**.

10.1.4. At the "Failsafe III Installation Options" screen, verify the following:

COM1 is selected.
UPS model is "PowerRite Pro II"
Default directory is "C:\FS3\".

10.1.5. Left click **Install**.

10.1.6. At the "FailSafe III Install" window, left click **OK**.

10.1.7. Close all visible windows and reboot the system.

10.2. Configure UPS environment

10.2.1. Log in as **Administrator**.

10.2.2. Uncheck the box “Show this next time…” and close the “Welcome – Microsoft Internet Explorer” window.

10.2.3. Verify that a Battery Icon is visible in the bottom right corner of the taskbar.

10.2.4. Left click **Start** >> **Programs** >> **FailSafe III** >> **FailSafe III Console**.

10.2.5. Wait till “Power Monitor Communications OK” is visible at the bottom of the window.

10.2.6. Left click **Setup** >> **Customize Alerts**.

10.2.7. Left click “0-$MACHINE is on battery…shutdown”.

10.2.8. Left click check box “Execute Command”.

10.2.9. Type in edit field **UPS.BAT SHUTMUSE**

10.2.10. Left click “0-$MACHINE is on battery…shutdown”.

10.2.11. Left click “2-$MACHINE shutdown has been cancelled”.

10.2.12. Left click check box “Execute Command”.

10.2.13. Type in edit field **UPS.BAT CANCEL**

10.2.14. Left click **OK**.

10.2.15. Close “FailSafe III Console” application.

11. CONFIGURING ADMINISTRATOR DESKTOP

11.1. Set the screen saver.

11.1.1. Right click on the desktop, left click **Properties**.
11.1.2. Left click the “Screen Saver” tab.
11.1.3. Choose the **Logon Screen Saver** from “Screen Saver” pull down menu.
11.1.4. Left click “Password Protected” check box.
11.1.5. Verify “Wait” is set to **15** minutes.
11.1.6. Left click **OK** to exit.

11.2. Move the Desktop icons to the Recycle Bin.

11.2.1. Right click on icon **My Briefcase** and select **Delete**.
11.2.2. Left click **Yes** to confirm delete.
11.2.3. Right click on icon **Install Internet Information…** and select **Delete**.
11.2.4. Left click **Yes** to confirm delete.

11.3. Set the taskbar options

11.3.1. Left click **Start** >> **Settings** >> **Taskbar…**
11.3.2. Verify "Always on top" is selected.
11.3.3. Left click "Show small icons in Start menu."
11.3.4. Verify "Show Clock" is selected.
11.3.5. Left click **OK** to exit.

11.4. Set the Explorer Options

11.4.1. Left double-click "My Computer" icon.
11.4.2. Left click **View** >> **Toolbar**. Toolbar should appear in window.
11.4.3. Left click **View** >> **Options…**
11.4.4. Left click the radio button "Browse folders by using a single window that changes as you open each folder."
11.4.5. Left click the "View" tab.
11.4.6. Left click the radio button "Show all files."
11.4.7. Left click the check button "Display the full path in the title bar."
11.4.8. Un-select "Hide file extensions for known file types."
11.4.9. Left click the check button "Display compressed files and folders with alternate color."
11.4.10. Left click **OK**. Close "My Computer" window.

11.5. Set the command prompt options

11.5.1. Left click **Start** >> **Settings** >> **Control Panel** >> **Console**.
11.5.2. Left click the "Options" tab. Default.
11.5.3. Left click the radio button "Large."
11.5.4. Left click the "Layout" tab.
11.5.5. Enter **80** for the "Screen Buffer Size Width". Default.
11.5.6. Enter **50** for the "Screen Buffer Size Height".
11.5.7. Enter **80** for the "Window Size Width". Default.
11.5.8. Enter **50** for the "Window Size Height".
11.5.9. Left click **OK**. Close "Control Panel" window.

12. MICROSOFT INTERNET INFORMATION SERVER 4.0 INSTALLATION

12.1. Make sure that the MUSE Software CD is in the CD-ROM drive.

12.2. Left click **Start** >> **Run**.

12.3. Type **Z:\MUSEWEB\SETUP.CMD** and left click **OK**.

12.4. At the "Setup" prompt, left click **Yes**.

12.5. At the "Setup" prompt, left click **Yes**.

Note: Setup window will appear and start copying files. This procedure will last for about 5-7 minutes. It will automatically reboot the system.

13. INSTALLING NETWORK PRINTER SUPPORT

Note: The following conditions must be met before continuing on with this section:
The printer must be configured using Jet Admin on the RSS Test PC.
If PDC: A printer connected to the Switch with an IP and Gateway set.
If Member: A printer connected to the MEI network with a known name.
Check customer order to see if it is called out as an option.

13.1. Log in as **Administrator**.

13.2. Left click **Start >> Settings >> Printers**

13.3. Left double-click icon **Add Printer**.

13.4. At the "Add Printer Wizard" screen, verify the radio button "My Computer" is selected. Left click **Next**.

13.5. Left click **Add Port**.

13.6. From the "Available Printer Ports" section, left click **LPR Port**.

13.7. Left click **New Port**.

13.8. Perform one of the following based on the File Server:

PRIMARY DOMAIN CONTROLLER INSTALL In the "Name or address…" edit field type **XXX.XXX.XXX.XXX** **Note**: XXX.XXX.XXX.XXX = the IP of the Printer.

MEMBER SERVER INSTALL In the "Name or address…" edit field type **$$$$$$$$$$** **Note**: **$$$$$$$$$$** = the name of the Printer based on Menu Printout.

13.9. In the "Name of printer or print…" edit field type **raw**.

13.10. Left click **OK**. Left click **Close**.

13.11. Left click **Next**.

13.12. Left click **Have Disk**.

13.13. Type **Z:\HPPRINT\NT** and left click **OK**.

13.14. Left click **HP LaserJet 4000 Series PS** in the "Printers" section.

13.15. Left click **Next**.

13.16. In the "Printer Name" section, type a unique name for the printer.

Note: Default name should suffice unless otherwise stated by Pre-Build Survey.

13.17. Left click **Next**.

13.18. Left click the radio button “Shared” and type in the edit a unique name.

Note: For one (1) printer, use **LJ4K01**. If more, increase number.
Default name should suffice unless otherwise stated by Pre-Build Survey.

13.19. Left click **Next**.

13.20. Verify the radio button **Yes** is selected and left click **Finish** to print a test page.

13.21. If the page printed successfully, left click **Yes**. If not left click **NO** and follow the instructions to troubleshoot the problem.

13.22. Close all visible windows.

14. INSTALLING LOCAL PRINTER SUPPORT

Note: The following condition must be met before continuing on with this section:
A printer configured and attached to the LPT port on the server.
Check customer order to see if it is called out as an option.

14.1. Log in as **Administrator**.

14.2. Left click **Start** >> **Settings** >> **Printers**

14.3. Left double-click icon **Add Printer**.

14.4. At the “Add Printer Wizard” screen, verify the radio button “My Computer” is selected. Left click **Next**.

14.5. From the “Available Ports” section, left click the radio button that the printer is attached to.

14.6. Left click **Next**.

14.7. Left click **Have Disk**.

14.8. Type **Z:\HPPRINT\NT** and left click **OK**.

14.9. Left click **HP LaserJet 4000 Series PS** in the “Printers” section.

14.10. Left click **Next**.

14.11. In the “Printer Name” section, type a unique name for the printer.

Note: Default name should suffice unless otherwise stated by Pre-Build Survey.

14.12. Left click **Next**.

14.13. Left click the radio button “Shared” and type in the edit a unique name.

Note: For one (1) printer, use **LJ4K01**. If more, increase number.
Default name should suffice unless otherwise stated by Pre-Build Survey.

14.14. Left click **Next**.

14.15. Verify the radio button **Yes** is selected and left click **Finish** to print a test page.

14.16. If the page printed successfully, left click **Yes**. If not left click **NO** and follow the instructions to troubleshoot the problem.

14.17. Close the “Printers” window.

15. DISKEEPER FOR WINDOWS NT SERVER 4.0 INSTALLATION

15.1. Make sure that you are logged in as **Administrator**.

15.2. Make sure that the MUSE Software CD is in the CD-ROM drive.

15.3. Left click **Start >> Run**.

15.4. Type **Z:\DISKPR\V40\X86\SETUP.EXE** and left click **OK**.

15.5. At the “Welcome” screen, left click **Next**.

15.6. At the “Software License Agreement” screen, left click **Yes**.

15.7. At the “Choose Destination Location” screen, verify default directory is **C:\ExecSoft\Diskeep** and left click **Next**.

15.8. At the “Choose Destination Location” screen, verify “Diskeeper” is program folder and left click **Next**.

15.9. At the “Registration” screen, left click **Next**.

15.10. Left click the check box “Yes, I want to Launch Diskeeper.”

15.11. Left click **Finish**.

15.12. Left click **Close** in the “Welcome window.”

15.13. Left click **Options >> Event Logging**.
Verify/change the following table:

X	Service Start and Stop
X	Defrag Start and Stop
	Defrag Files
	Moved Files
	Disk Information
	File Information
	Directory Information
	Pagefile Information
	MFT Information

15.14. Left click **OK**.

15.15. Close the “Diskeeper” window.

15.16. Diskeeper 4.1 Patch Installation

15.16.1. Left click **Start >> Run**.
15.16.2. Type **Z:\DISKPR\V40\X86\PATCH\DK4UPDATE_I.EXE** and left click **OK**.
15.16.3. At the "Welcome" screen, left click **Finish**.
15.16.4. Left click **Next**.
15.16.5. Left click **Yes**.
15.16.6. Left click **Finish**.

16. PCANYWHERE32 8.0 INSTALLATION

Note: The following condition must be met before continuing on with this section:
A 56K MultiTech modem attached to COM2 of the server.

16.1. Installing main program.

16.1.1. Remove the MUSE Software CD. Insert the pcAnywhere CD into the CD-ROM drive.

16.1.2. Left click **Start >> Run**.

16.1.3. Type **Z:\CDINST.EXE** and left click **OK**.

16.1.4. Highlight and left click on the **Install Software** option in the "pcAnywhere CD-ROM installation Utility."

16.1.5. At the "Welcome" screen left click **Next**.

16.1.6. At the "User Information" screen Enter/Verify information, left click **Next**.

16.1.7. Read/verify the license agreement and left click **Yes**.

16.1.8. Accept the destination directory location and left click **Next**. Verify default directory is **C:\Program Files\pcANYWHERE**.

16.1.9. Review the setup information on the "Setup Review" screen and left click **Next**. Program will begin installing file to the computer.

16.1.10. Left click **Next** on "Symantec Support Solutions" screen.

16.1.11. Left click **Next** on "How to Reach Us" screen.

16.1.12. Left click **Next** on "Windows 95 Solutions" screen.

16.1.13. Left click **Skip** on "Online registration" screen.

16.1.14. Left click **No** to skip viewing the Readme file.

16.1.15. Left click **Finish** to restart the computer.

16.1.16. Remove the pcAnywhere CD from drive.

16.2. Installing pcAnywhere Host Service

16.2.1. Make sure that the MUSE Software CD is in the CD-ROM drive.

16.2.2. Log in as **Administrator**.

16.2.3. Left click **Start >> Programs >> pcANYWHERE32 >> pcANYWHERE**.

16.2.4. If "Smart Setup Modem" window appears, do the following:

16.2.4.1. Left click **Add Modem**.

16.2.4.2. Left click check box "Don't detect my modem…" Left click **Next**.

16.2.4.3. Left click **Have Disk**

16.2.4.4. Type **Z:\MULTITECH\NT**

16.2.4.5. Left click **OK**

16.2.4.6. Left click **MultiTech Systems MT5600ZDX**

16.2.4.7. Left click **Next**

16.2.4.8. Left click **COM2**. Left click **Next**.

16.2.4.9. In the "What area(city) code …" edit box type **YYY**

Note: YYY = The area code of the city.

Verify radio button "Tone Dialing" is selected. Left click **Next**.

16.2.4.10. Left click **Finish**.

16.2.4.11. Verify modem is **MultiModem MT5600ZDX**. Left click **Next**.

16.2.4.12. Verify **TCP/IP** is selected. Left click **Next**.

16.2.4.13. At the "Please select a port…" choose **COM2**. Left click **Finish**.

16.2.5. Left click the **BE A HOST PC** button.

16.2.6. Right click on the **MODEM** icon and select the **Properties** dialog.

16.2.7. Verify/select **MultiModem 5600ZDX** is selected in the "Connection Info" tab.

16.2.8. Left click "Settings" tab.

16.2.9. Verify/select in "Host Startup" **Run Minimized** is checked.

16.2.10. Verify/select in "Host Startup" **Run as Service** is checked.

16.2.11. Verify/select in “Host Options” **Wait for Anyone** is checked.

16.2.12. Verify/select in both sections, in “Security” **Log off user** is checked.

16.2.13. Left click “Callers” tab.

16.2.14. Left click **Use NT user privileges** radio button.

16.2.15. Left double-click on “Add User” icon and do the following:

16.2.15.1. Verify **“User”** radio button is selected. Left click **Next**.

16.2.15.2. In the “What domain…” select the MUSE file server (Make sure you choose the machine name like **MUSE$$$XXX** and not the domain name like MUSE$$$)

16.2.15.3. In the “Select the account…” select **Administrator** and left click **Next**. Left click **Finish**.

16.2.16. Left click the “Security Options” tab.

16.2.17. In “Connection Options” left click the **Blank this PC screen after connection made**.

16.2.18. Left click **OK** to save the properties settings for the MODEM connection.

16.2.19. Left double-click the **MODEM** icon button to launch the service.

16.3. Switching pcAnywhere Host Service to Automatic

16.3.1. Left click **Start** >> **Settings** >> **Control Panel** >> **Services**.

16.3.2. Highlight the **pcANYWHERE Host Service**.

16.3.3. Left click **Startup** button and set the radio button **AUTOMATIC**.

16.3.4. Left click **OK**.

16.3.5. Verify that the “pcANYWHERE Host Service” has a status of **STARTED** and a startup of **AUTOMATIC**, left click **Close**.

16.3.6. Close “Control Panel” window.

17. NT 4.0 SERVER RESOURCE KIT INSTALLATION

17.1. Make sure that you are logged in as **Administrator**.

17.2. Make sure that the MUSE Software CD is in the CD-ROM drive.

17.3. Left click **Start** >> **Run**.

17.4. Type **Z:\NTRESKIT\SETUP.EXE** and left click **OK**.

17.5. At the “Do you agree to these terms…” screen left click **Accept**.

17.6. At the “Windows NT Server…” screen, Left click **Continue**.

17.7. At “Name” enter in the hospital's name.

17.8. At “Organization” enter in the hospital's affiliation or the hospital’s name again. Left click **OK.**

17.9. Left click **OK**.

17.10. Accept the destination directory location and left click **OK**. Verify the default directory is **C:\NTRESKIT**.

17.11. Left click **Custom/Complete** and left click **Continue**.

17.12. Left click **OK** to complete setup.

18. ST. BERNARD'S OPEN FILE MANAGER VERSION 5.1 INSTALLATION

18.1. Make sure that you are logged in as **Administrator**.

18.2. Make sure that the MUSE Software CD is in the CD-ROM drive.

18.3. Left click **Start >> Run**.

18.4. Type **Z:\OFM\V51\SETUP.EXE** and left click OK.

18.5. At the “Welcome” screen, left click **Next**.

18.6. At the “Software License Agreement” screen, left click **Yes**.

18.7. At the “User Information” screen type in the following:

Name:	MUSE$$$001
Company:	Hospital Name
Serial:	See OFM package for number

18.8. Left click **Next**.

18.9. At the “Choose Destination Folder” screen, verify default location to be “C:\Program Files\OFM” left click **Next**.

18.10. At the “Select Program Folder” screen, verify default folder to be “Open File Manager” left click **Next**.

18.11. At the “Start Copying Files” screen left click **Next**.

18.12. At the “Setup Complete” screen left click **Finish**.

18.13. At the “Open File Manager” window, left double click “OFM” icon.

18.14. Left click on the “+” sign to the left of the “Microsoft Windows Network” to open.

18.15. Left click on the “+” sign to the left of the Domain in which the File Server is in.

PDC ..... **MUSE$$$**
Member ..... **MUSESIG**

18.16. You should now be able to see the File Server's Computer Name in which you are installing OFM to. Right click on "MUSE$$$001" and left click **Install** from the pop-up menu.

18.17. At the "Install OFM" screen left click "MUSE$$$001" under the "System" section and left click **Install**.

18.18. Left click **Start** and verify the green check mark by the Computer Name.

18.19. Left click **File >> Exit** and close all visible windows.

19. BTRIEVE 7.0 INSTALLATION – **5B ONLY**

19.1. Make sure that you are logged in as **Administrator**.

19.2. Make sure that the MUSE Software CD is in the CD-ROM drive.

19.3. Left click **Start >> Run**.

19.4. Type **Z:\BTRIEVE\V70_3\SETUP.EXE** and left click **OK**.

19.5. At the "Pervasive.SQL Install Welcome" window, left click **Next**.

19.6. At the "Pervasive.SQL Setup Type" window, left click **Custom**.

19.7. At the "Select Server Engines" window, left click "Scalable SQL" to uncheck the box and verify "Btrieve" to be the only box checked. Left click **Next**.

19.8. At the "Select Client Components Installation Directory" window, verify **C:\PVSW** and left click **Next**.

19.9. At the "Select Components to Install" uncheck all boxes EXCEPT for "Client Programs" and "Btrieve" and left click **Next**.

19.10. At the "Question" window "You selected to not install the ODBC…" left click **NO**.

19.11. At the "Select Pervasive.SQL Software Folder" verify **Pervasive SQL 7** and left click **Next**.

19.12. At the "Select Services Mode" screen verify "Automatic" and left click **Next**.

19.13. Verify settings and left click **Next**.

Note: System will copy files.

19.14. At the "Setup User Count License" screen, insert the appropriate Btrieve floppy into the A: drive and left click **Install License**.

19.15. At the "User Count License" screen, left click **OK**.

19.16. At the “32-bit Btrieve Functionality Check” screen left click **Skip**.

19.17. At the “Question” window, left click **NO**. Remove floppy from the A: drive.

19.18. Left click **Finish** to restart system.

20. BTRIEVE 6.15 INSTALLATION – **5A ONLY**

20.1. Make sure that you are logged in as **Administrator**.

20.2. Make sure that the MUSE Software CD is in the CD-ROM drive.

20.3. Left click **Start >> Run**.

20.4. Type **Z:\BTRIEVE\V615\XX\INSTALL.EXE** and left click **OK**.

Note: XX = the amount of licenses purchased.

20.5. At the “Pervasive Welcome” window left click **Next**.

20.6. At the “Installation Options” window left click **Next**.
Verify that all boxes are checked.

20.7. At the “Choose Destination Location” window left click **Next**.
Verify the default directory is **c:\bti\winnt**.

20.8. At the “Install will copy files…” left click **Yes**.

20.9. At the “Btrieve for Windows NT Service has been installed and is running…” prompt left click **Yes** to stop it now.

20.10. At the “What type of program group...” Left click **Next**.
Verify radio box “Common Program Group…**”** is selected.

20.11. At the “Would you like to view...” left click **No**.

20.12. At the “Install is complete...” screen, left click **OK**. Close window.

21. VISUAL BASIC 4 INSTALLATION – **5A ONLY**

21.1. Make sure that you are logged in as **Administrator**.

21.2. Make sure that the MUSE Software CD is in the CD-ROM drive.

21.3. Left click **Start >> Run**

21.4. Type **Z:\VISUALB4\SETUP.EXE** and left click **OK**.

21.5. Left click **OK**.

21.6. Verify directory to be **C:\PROJECT1**. Left click button.

21.7. At the “Project1 Setup…” message box, left click **OK**.

22. MUSE MAIL MESSAGING INSTALLATION

Note: Check customer order to see if this is an ordered option. If Yes, install the following. If not, go to next section.

22.1. Install the IIS 4.0 SMTP Server

22.1.1. Make sure that the MUSE Software CD is in the CD-ROM drive.

22.1.2. Left click **Start** >> **Programs** >> **Windows NT 4.0 Option Pack** >> **Windows NT 4.0 Option Pack Setup**.

22.1.3. Left click **Next**.

22.1.4. Left click **Add/Remove**.

22.1.5. Left double-click the "Internet Information Server (IIS)" in the "Components" list.

22.1.6. At the "Internet Information Server (IIS)" screen, left click the "SMTP Service" check box.

22.1.7. Left click **OK**.

22.1.8. Left click **Next**.

22.1.9. Left click **Next** to accept the default mailroot directory.

22.1.10. Left click **Finish**.

22.2. Configure the IIS 4.0 SMTP Server

22.2.1. Left click **Start** >> **Programs** >> **Windows NT 4.0 Option Pack** >> **Microsoft Internet Information Server** >> **Internet Service Manager**.

22.2.2. Left click "show tips on startup" to uncheck and left click **Close**.

22.2.3. In the left window pane, left click the "+" sign to the left of the "Internet Information Server" to open.

22.2.4. Left click the "+" sign to the left of "MUSE$$$XXX" to open.

22.2.5. Right click "Default SMTP Site" to access menu and left click "Properties."

22.2.6. Left click "Messages" tab and type in the following:

Maximum Message Size (kilobytes) **30000**
Maximum Session Size (kilobytes) **30000**

22.2.7. Left click "Delivery" tab and type in the following:

Smart Host ..... **MUSESIG**

22.2.8. Left click "Directory Security" tab.

22.2.9. In the “Relay Restrictions” section, left click **Edit…**

22.2.10. Left click “Allowed to Relay” radio button.

22.2.11. Left click **OK**.

22.2.12. Left click **OK**.

22.2.13. Left click **Console** >> **Exit**.

22.2.14. Left click **Yes** to console settings.

22.2.15. Left click **Start** >> **Settings** >> **Control Panel** >> **Services**.

22.2.16. Make sure the following is set for the “Microsoft SMTP Service”

Startup..... **Automatic**
Status ..... **Started**

22.2.17. Left click **Close**.

22.2.18. Close “Control Panel.”

22.3. Install EMWAC POP3 Server Software

22.3.1. Left click **Start** >> **Run**.

22.3.2. Type **Z:\POP3\INSTALL.BAT C:\WINNT** and left click **OK**.

22.3.3. At the “Does the MUSE File Server…” prompt, verify **NO** is highlighted and press. **<ENTER>**

22.3.4. At the “Registry Editor” prompt, left click **OK**.

23. MUSE SOFTWARE INSTALLATION – **5A ONLY**

23.1. Install MUSE Application Files

23.1.1. Make sure that you are logged in as **Administrator**.

23.1.2. Make sure that the MUSE Software CD is in the CD-ROM drive.

23.1.3. Left click **Start** >> **Programs** >> **Command Prompt**.

23.1.4. Type **Z: <ENTER>**

23.1.5. Type **CD\MUSE <ENTER>**

23.1.6. Type **INSTALL 1 <ENTER>**

23.1.7. At the “License…” prompt, verify **Yes**. **<ENTER>**

23.1.8. At the “Time Zone Environment Variable”, select accordingly.

Note: This will depend on the city you are shipping to.

23.1.9. At the "Add a Start MUSE CV Shortcut to the Desktop" prompt, verify **Yes**. **<ENTER>**

23.1.10. Perform the following based on the File Server:

MEMBER SERVER INSTALL ONLY

Type **CVUSER MuseAdmin <ENTER>**
Type **CVUSER MuseBkgnd <ENTER>**

23.2. Perform one of the following based on the Sales Order:

CONVERSION INSTALL ONLY
If your system requires a customer database to be placed on the system, notify the appropriate member of conversion to do this. When done, they will call you back to continue with the install.

NO CONVERSION OR NEW SYSTEM INSTALL ONLY
If your system is NEW or DOES NOT need a customer's database installed on it, install the default MUSE Database Files.

Type **CD\MUSEDB <ENTER>**
Type **INSTALL 5000 <ENTER>**
At the "License…" prompt, verify **Yes**. **<ENTER>**

23.3. Perform one of the following based on the File Server:

MEMBER SERVER INSTALL ONLY

Type **cvsinst MUSESIG\MUSEBkgnd Muse!Bkgnd d:\vol000\system\sysinf\services.asc <ENTER>**

23.4. **MUSE CV WEB INSTALLATION ONLY**

Note: Check customer order to see if this is an ordered option. If Yes, install the following. If not, go to next section.

23.4.1. Install MUSE CV WEB

23.4.1.1. Type **CD\MUSEWEB <ENTER>**

23.4.1.2. Type **INSTALL Z:\MUSEWEB\ <ENTER>**

23.4.1.3. At the "License…" prompt, verify **Yes**. **<ENTER>**

23.4.2. Install Adobe Acrobat Reader

23.4.2.1. Left click **Start >> Run**

23.4.2.2. Type **Z:\ADOBE\AR32E301.EXE** and left click **OK**.

23.4.2.3. At the "This will install Adobe Acrobat…" screen, left click

Yes.

23.4.2.4. At the “Welcome” screen, left click **Next**.

23.4.2.5. At the “License Agreement” screen, left click **Yes**.

23.4.2.6. At the “Destination Directory” screen, Left click **Next**.

23.4.2.7. At the “Setup Complete” screen, uncheck the “Display Acrobat Reader 3.01 Readme file” check box, left click **Finish**.

23.4.2.8. Left click **OK** to the “Setup is complete” message.

23.5. **MUSE WORD DATABASE INSTALLATION ONLY**

Note: Check customer order to see if MUSE CV Word is an ordered option. If Yes, install the following. If not, go to next section.

23.5.1. Type **CD\MUSEWDDB <ENTER>**

23.5.2. Type **INSTALL <ENTER>**

23.6. Install MUSE Update files

23.6.1. Type **CD\MUSEUP <ENTER>**

23.6.2. Type **INSTALL -U <ENTER>**

23.6.3. At the “License…” prompt, verify **Yes**. **<ENTER>**

23.7. Type **EXIT**. **<ENTER>**

23.8. Reboot the system.

24. MUSE SOFTWARE INSTALLATION – **5B ONLY**

24.1. MUSE CV Server and MUSE CV Web Installation

24.1.1. Log in as **Administrator**.

24.1.2. If any Btrieve 7.0 folders are open in the tool bar, close them now.

24.1.3. Left click **Start >> Run**

24.1.4. Type **Z:\MUSE32\SETUP.EXE** and left click **OK**.

24.1.5. At the “Welcome” screen, left click **Next**.

24.1.6. At the “Software License Agreement” screen, left click **Yes**.

24.1.7. At the “Select MUSE CV System NODE Type” screen, verify that the “File Server” radio button is selected.

24.1.8. Left click **Next**.

24.1.9. At the “Select MUSE CV…” screen, make sure “MUSE CV

Application" check box is selected.

24.1.10. If you are installing MUSE CV Web, left click "MUSE CV Web" check box.
Check customer order to see if this is an ordered option. If Yes, install the MUSE CV Web. If not, do not check, skip this and move on.

24.1.11. Left click **Next**.

24.1.12. At the question screen "Add MUSE CV Desktop icon," verify that the **Yes** radio button is selected and left click **Next**.

Note: System will copy files.

24.1.13. At the "Setup Complete" screen, verify "Yes, I want to restart my computer now" radio button is selected and left click **Finish** to restart the computer.

24.2. Perform the following based on the File Server:

MEMBER SERVER INSTALL ONLY

24.2.1. Make sure that you are logged in as **Administrator**.

24.2.2. Left click **Start >> Programs >> Command Prompt**.

24.2.3. Type **CVUSER MuseAdmin <ENTER>**

24.2.4. Type **CVUSER MuseBkgnd <ENTER>**

24.2.5. Type **EXIT**. **<ENTER>**

24.3. Perform one of the following based on the Sales Order:

CONVERSION INSTALL ONLY
If your system requires a customer database to be placed on the system, notify the appropriate member of conversion to do this. When done, they will call you back to continue with the install.

NO CONVERSION OR NEW SYSTEM INSTALL ONLY
If your system is NEW or DOES NOT need a customer's database installed on it, install the default MUSE Database Files.

24.3.1. Make sure that you are logged in as **Administrator**.

24.3.2. Make sure that the MUSE Software CD is in the CD-ROM drive.

24.3.3. Left click **Start >> Run**

24.3.4. Type **Z:\MUSEDB\SETUP.EXE** and left click **OK**.

24.3.5. At the "Welcome" screen, left click **Next**.

24.3.6. At the "Software license agreement" screen, left click **Yes**.

Note: System will copy files.

24.3.7. At the "Question" prompt, left click **No** and left click **Next**.

24.3.8. At the "Setup Complete" screen, left click "NO" radio button and left click **Finish**.

24.4. Perform one of the following based on the File Server:

MEMBER SERVER INSTALL ONLY

24.4.1. Left click **Start >> Programs >> Command Prompt**.

24.4.2. Type **cvsinst MUSESIG\MUSEBkgnd Muse!Bkgnd d:\vol000\system\sysinf\services.asc <ENTER>**

24.4.3. Type **EXIT**. **<ENTER>**

24.5. **MUSE CV WEB INSTALLATION ONLY**

Note: Check customer order to see if this is an ordered option. If Yes, install the following. If not, go to next section.

24.5.1. Install Adobe Acrobat Reader

24.5.1.1. Left click **Start >> Run**

24.5.1.2. Type **Z:\ADOBE\AR32E301.EXE** and left click **OK**.

24.5.1.3. At the "This will install Adobe Acrobat…" screen, left click **Yes**.

24.5.1.4. At the "Welcome" screen, left click **Next**.

24.5.1.5. At the "License Agreement" screen, left click **Yes**.

24.5.1.6. At the "Destination Directory" screen, Left click **Next**.

24.5.1.7. At the "Setup Complete" screen, uncheck the "Display Acrobat Reader 3.01 Readme file" check box, left click **Finish**.

24.5.1.8. Left click **OK** to the "Setup is complete" message.

24.6. Install MUSE Update Files

24.6.1. Left click **Start >> Programs >> Command Prompt**
24.6.2. Type **Z: <ENTER>**
24.6.3. Type **CD\MUSEUP <ENTER>**
24.6.4. Type **INSTALL -U <ENTER>**
24.6.5. At the "License…" prompt, verify **Yes**. **<ENTER>**
24.6.6. Type **EXIT <ENTER>**

24.7. Reboot the system.

25. TESTING THE MUSE CV WEB INSTALLATION

Note: Perform this section only if the MUSE CV WEB option has been installed, otherwise go to the next section.

25.1. Log in as the following:

User ..... **MuseAdmin**
Password..... **Muse!Admin**

Domain PDC ..... **MUSE$$$**
Domain Member..... **MUSESIG**

25.2. At the "Welcome" window, left click **Close**.

25.3. Close the "Welcome – Microsoft Internet Explorer" window.

25.4. Make sure that the MUSE Software CD is in the CD-ROM drive.

25.5. Left click **Start** >> **Run**.

25.6. Type **Z:\BAT\ADDTMPUS.BAT** and left click **OK**.

25.7. Verify the commands completed successfully.

25.8. Press any key to close the command prompt window.

25.9. Left click **Start** >> **Shut Down…**

25.10. Select the "Close all programs and…?" radio button.

25.11. Left click **Yes**.

25.12. Log in as the following:

User ..... **CVWEBTEST**
Password..... **cvwebtest**

Domain PDC ..... **MUSE$$$**
Domain Member..... **MUSE$$$XXX**

Note: MUSE$$$XXX = local machine

25.13. At the "Welcome" window left click **Close**.

25.14. Close the "Welcome – Microsoft Internet Explorer" window.

25.15. Left double-click the "Internet Explorer" icon on the desktop.

25.16. Left click **Next**.

25.17. At the "Setup Options screen", select the "I already have an Internet connection…" radio button, left click **Next**.

25.18. Left click **Finish**.

25.19. Left click **Stop** to abort finding Microsoft Web Site or left click **OK** at the "A

connection with the server…" prompt.

25.20. Left click in the Address bar of the Internet Explorer window, type **MUSE$$$XXX**. **<ENTER>**

25.21. In the "Enter Network Password" window, enter the following:

User name.....**CVWEBTEST**
Password..... **cvwebtest**

25.22. Left click **OK**.

25.23. Verify that the "Welcome to the MUSE® CardioVascular Information System Website" homepage is displayed.

25.24. Close the Internet Explorer window.

25.25. Left click **Start >> Shut Down…**

25.26. Select the "Close all programs and…?" radio button.

25.27. Left click **Yes**.

25.28. Log in as **Administrator**

25.29. Left click **Start >> Run**.

25.30. Type **Z:\BAT\DELTMPUS.BAT** and left click **OK**.

25.31. Verify the commands completed successfully.

25.32. Press any key to close the command prompt window.

25.33. Left click **Start >> Shutdown…**

25.34. Select the "Restart" radio button. System will reboot.

26. SETTING UP MUSE ENVIRONMENT

26.1. Log in as **MuseAdmin**. Password is **Muse!Admin**.

Perform one of the following based on the File Server:

PRIMARY DOMAIN CONTROLLER INSTALL ONLY In the "Domain" pull down box select **MUSE$$$**

MEMBER SERVER INSTALL ONLY In the "Domain" pull down box select **MUSESIG**

26.2. If the "Welcome" window appears, left click **Close**.

26.3. If the "Welcome – Microsoft Internet Explorer" window appears, close it.

26.4. Adding nodes to the server

26.4.1. Left click **Start >> Programs >> Command prompt**

26.4.2. Type **CVUSER MuseXXX**. **<ENTER>**

Note: XXX is number of the node that you want to add.

The corresponding password will be **Muse!XXX**.

Repeat this step for as many users that you will have connecting to the server.

26.4.3. Type **Exit**. **<ENTER>**

26.5. Configuring IMS

26.5.1. Left click **Start >> Run**

26.5.2. Type **DCOMCNFG**. Left click **OK**.

26.5.3. Select **MUSE-CV IMS Cserver**. Left click **Properties**.

26.5.4. Left click the "Security" tab.

26.5.5. Left click the "Use Custom Access Permissions" radio button. Left click **Edit** button.

26.5.6. Left click **Add**.

26.5.6.1. Left click "List Names From" and choose the local domain:
PDC .....**MUSE$$$**
Member.....**MUSE$$$XXX***

26.5.6.2. Left double-click **Muse Users** group.

26.5.6.3. Left double-click **System** group.

26.5.6.4. Verify they appear in "Add names" window along with "Type of Access" being **Allow Access**. Left click **OK**. Left click **OK**

26.5.7. Left click the "Use Custom Launch Permissions" radio button. Left click **Edit** button.

26.5.8. Left click **Add**.

26.5.8.1. Left click "List Names From" and choose the local domain:
PDC .....**MUSE$$$**
Member.....**MUSE$$$XXX***

26.5.8.2. Left double-click **Muse Users** group.

26.5.8.3. Left double-click **System** group.

26.5.8.4. Verify they appear in "Add names" window along with "Type of Access" being **Allow Launch**. Left click **OK**. Left click **OK**

26.5.9. Left click "Identity" tab.

26.5.10. Left click “This User” radio button.

26.5.11. Perform one of the following based on the File Server:

PRIMARY DOMAIN CONTROLLER INSTALL ONLY
In the “User” edit box type **MUSE$$$\MuseBkgnd**

Note: Where MUSE$$$ = domain name of PDC.

MEMBER SERVER INSTALL ONLY
In the “User” edit box type **MUSESIG\MuseBkgnd**

26.5.12. In the “Password” edit box type **Muse!Bkgnd** and confirm the password.

26.5.13. Left click **OK**.

26.5.14. Left click **OK**.

26.6. Verify that IMS is configured properly.

26.6.1. Insert Cartridge into Tape Backup unit.
26.6.2. Left click **Start >> Run**.
26.6.3. Type **CVIS0122**. Left click **OK**.
26.6.4. Verify that the MUSE-IMS window is launched, close window.

26.6.5. Left click **Start >> Run**.

26.6.5.1. Type **D:\VOL000\SYSTEM\SYSINF\IMS.INI**. Left click **OK**.

26.6.5.2. Add the following to the section **– 5A ONLY**

[Backup]
LastWeek=
ThisWeek=
UpdateOFM=FALSE

26.6.5.3. Change section to the following:

[AUTORUN]
BACKARC=**FALSE**
INTEGRITY=**FALSE**

26.6.5.4. Save file.

26.6.6. Left click **Start >> Run**.

26.6.7. Type **SOON CVIS0122 –AUTORUN**. Left click **OK**.

Note: A window should appear and close down.

26.6.8. Start MUSE.

26.6.8.1. Left click **Start** >> **Programs** >> **MUSE CVIS** >> **Start MUSE CV**.

26.6.8.2. Left click **System** >> **System Status**

26.6.8.3. Left click **Select List** >> **Event Log**

26.6.8.4. Visually check for the following entries

"IMS Started"
"IMS Ended"

26.6.8.5. Exit MUSE application. Left click **System** >> **Exit**.

26.6.9. Left click **Start** >> **Run**.

26.6.9.1. Type **D:\VOL000\SYSTEM\SYSINF\IMS.INI**. Left click **OK**.

26.6.9.2. Change section to the following:

[AUTORUN]
BACKARC=**TRUE**
INTEGRITY=**TRUE**

26.6.9.3. Save file.

26.6.10. Configure nightly Auto Run time

26.6.10.1. Left click **Start** >> **Run**.
26.6.10.2. Type **CVIS0122**. Left click **OK**.
26.6.10.3. Left click **System** >> **Set AutoRun Time**.
26.6.10.4. Right click in the white Client area that is launched.
26.6.10.5. Left click **Add**.
26.6.10.6. Type in the command box **CVIS0122 –AUTORUN**
26.6.10.7. Set the days and hours of operation.

26.6.10.7.1. The "Every" radio button should be selected.
26.6.10.7.2. Left click on every day of the week.
26.6.10.7.3. Set the time for 3:00 am.
26.6.10.7.4. Left click **OK**.

26.6.10.8. Verify a green check, all days chosen and time set to 3:00am.
26.6.10.9. Close all visible windows.

26.6.11. Installing Options Disk

26.6.11.1. Start MUSE by left double-clicking on icon **Start MUSE CV**

26.6.11.2. Left click **System** >> **System Setup**.

26.6.11.3. Left click **System** >> **Install Options**.

26.6.11.4. Copy “Authorization Code” and proceed to MUSE Options station to set up the Options Disk #419719-001.

26.6.11.5. Once completed, insert Options disk into floppy drive and left click **Install**.

26.6.11.6. Verify “Registered Name” and “Installed Options List” data to be correct.

26.6.11.7. Remove floppy.

26.6.11.8. Close MUSE application and restart NT.

26.7. CATH LAB INSTALLATION ONLY

Note: Check customer order to see if this is as an ordered option. If Yes, install the following. If not, go to next section.

26.7.1. Cath options must be turned on via the Options disk.

26.7.2. The file “**APPLIST.ASC**” must be edited and the “**!**” in front of **Configure Cath Lists…** must be removed.
The file “**BACKTASK.ASC**” must be edited and the “**;**” in front of **324,\\MUSE$$$XXX** must be removed.

26.8. MAC-LAB INSTALLATION ONLY

Note: Check customer order to see if this is as an ordered option. If Yes, install the following. If not, go to next section.

26.8.1. Share Drive for access.

26.8.1.1. Left click **Start >> Run**

26.8.1.2. Type **Z:\MUSEDB\MLABADD.BAT** and left click **OK**.

26.8.2. The file “**APPLIST.ASC**” must be edited and the “**!**” in front of **MAC-LAB Assistant…** must be removed.

26.9. ACC DATA EXPORT INSTALLATION ONLY

Note: Check customer order to see if this is as an ordered option. If Yes, install the following. If not, go to next section.

26.9.1. The file “**APPLIST.ASC**” must be edited and the “**!**” in front of **ACC Data Export…** must be removed.

26.10. INVENTORY MANAGEMENT AND SCHEDULE BOARD INSTALLATION ONLY

Note: Check customer order to see if this is as an ordered option. If Yes, install the following. If not, go to next section.

26.10.1. Inventory Management option must be turned on via the Options disk.

26.10.2. Schedule Board option must be turned on via the Options disk.

26.10.3. The file "**BACKTASK.ASC**" must be edited and the "**;**" in front of **612,1,1** must be removed. Also, the "1,1" must be changed to the number of the client that will running it.

Note: Only one instance of **612** can be activated on a networked system.

26.11. **TFTP SERVER INSTALLATION ONLY**

Note: Check customer order to see if a Gateway client is to be installed. If Yes, install the following. If not, go to next section.

26.11.1. The file "**BACKTASK.ASC**" must be edited and the line **325,1,1** must be added. Also, the "1,1" must be changed to the number of the client that will running it.

26.11.2. The file "**BACKTASK.ASC**" must be edited and the **340,1,1** must be added. Also, the "1,1" must be changed to the number of the client that will running it.

26.12. Installing the Bar Code font – **5A ONLY**

26.12.1. Logon as **MuseAdmin**.
26.12.2. Left click **Start** >> **Settings** >> **Control Panel** >> **Fonts**.
26.12.3. Left click **File** >> **Install New Font …**
26.12.4. Choose **C:\mei** directory.
26.12.5. Left click **3 of 9 Barcode (TrueType)**.
26.12.6. Left click **OK**.
26.12.7. Close all visible windows.

27. CONFIGURING MuseAdmin DESKTOP

27.1. Set the screen saver.

27.1.1. Right click on the desktop, left click **Properties**.
27.1.2. Left click the "Screen Saver" tab.
27.1.3. Choose the **Logon Screen Saver** from "Screen Saver" pull down menu.
27.1.4. Left click "Password Protected" check box.
27.1.5. Verify wait is set to **15** minutes.
27.1.6. Left click **OK** to exit.

27.2. Move the "My Briefcase" folder to the Recycle Bin.

27.2.1. Right click on icon **My Briefcase** and select **Delete**.
27.2.2. Left click **Yes** to confirm delete.

27.3. Set the taskbar options

27.3.1. Left click **Start** >> **Settings** >> **Taskbar…**
27.3.2. Verify "Always on top" is selected.
27.3.3. Left click "Show small icons in Start menu."
27.3.4. Verify "Show Clock" is selected.
27.3.5. Left click **OK** to exit.

27.4. Set the Explorer Options

27.4.1. Left double-click “My Computer” icon.
27.4.2. Left click **View >> Toolbar**. Toolbar should appear in window.
27.4.3. Left click **View >> Options…**
27.4.4. Left click the radio button “Browse folders by using a single window that changes as you open each folder.”
27.4.5. Left click the “View” tab.
27.4.6. Left click the radio button “Show all files.”
27.4.7. Left click the check button “Display the full path in the title bar.”
27.4.8. Un-select “Hide file extensions for known file types.”
27.4.9. Left click the check button “Display compressed files and folders with alternate color.”
27.4.10. Left click **OK**. Close “My Computer” window.

27.5. Set the command prompt options

27.5.1. Left click **Start >> Settings >> Control Panel >> Console**.
27.5.2. Left click the “Options” tab. Default.
27.5.3. Left click “Large” from the “Cursor Size” section.
27.5.4. Left click the “Layout” tab.
27.5.5. Enter **80** for the “Screen Buffer Size Width.” Default.
27.5.6. Enter **50** for the “Screen Buffer Size Height.”
27.5.7. Enter **80** for the “Window Size Width.” Default.
27.5.8. Enter **50** for the “Window Size Height.”
27.5.9. Left click **OK**. Close “Control Panel” window.

****
Note: At this point, the install of the MUSE File Server is complete.
Complete any necessary client installations and start the overall testing using TP MUSE 5A at this time.
After successful completion of the TP, return to this point and complete the AP.
****

28. BURN-IN PROCEDURE

No burn-in is necessary with MUSE systems.

29. CLEANUP

Perform one of the following based on the Sales Order:

CONVERSION INSTALL ONLY
Give system to the Conversion team. When they return it back to you, complete the rest of this AP.

NO CONVERSION OR NEW SYSTEM INSTALL ONLY
Continue with this AP.

29.1. Emptying Recycle Bin.

29.1.1. Right click on **Recycle Bin** icon.
29.1.2. Select “Empty Recycle Bin”
29.1.3. Left click **Yes**.
29.1.4. Reboot.

29.2. Disk Maintenance.

29.2.1. Make sure that you are logged in as **Administrator**.

29.2.2. Left click **Start** >> **Programs** >> **Diskeeper** >> **Diskeeper**.

29.2.3. Close “Welcome” window.

29.2.4. Left click **Defragment** >> **Select Disk**.

29.2.5. Left click C:[NTFS].

29.2.6. Left click **OK**.

29.2.6.1. Process will now start and may take 5-10 minutes.
29.2.6.2. Let click **OK** when done.

29.2.7. Left click **Defragment** >> **Select Disk**.

29.2.8. Left click D:[NTFS].

29.2.9. Left click **OK**.

29.2.9.1. Process will now start and may take 5-10 minutes.
29.2.9.2. Left click **OK** when done.

29.2.10. Left click **Advanced Tools** >> **Boot-Time Defragmentation**.

29.2.11. Left click C:[NTFS]. Left click “**Directory Consolidation**” check box. Left click **Set**. Verify Directory Consolidation Set.

29.2.12. Left click D:[NTFS]. Left click “**Directory Consolidation**” check box. Left click **Set**. Verify Directory Consolidation Set.

29.2.13. Left click **Close**.

29.2.14. At the “Diskeeper” prompt, left click **OK**, left click **OK**.

29.2.15. Close “Diskeeper” window.

29.2.16. Reboot system.

Note: This process will reboot your system a few times. Wait until you get a logon screen before continuing.

30. CREATING AN EMERGENCY REPAIR DISK

30.1. Log in as **Administrator**.
30.2. Insert a floppy into A: drive
30.3. Select **Start** >> **Run**
30.4. Type **RDISK /S**. Left click **OK**.
30.5. At the “Setup can create an Emergency Repair disk...” Screen, left click **Yes**.
30.6. At the “Label a floppy disk...” screen, left click **OK**.
30.7. At the “Windows NT repair information contains...” screen, left click **OK**.
30.8. Remove the floppy, date and label it as **MUSE$$$XXX Emergency Repair Disk**

30.9. Restart System.

31. TAPE BACKUP

31.1. Log in as **MUSE ADMIN**

31.2. Left click **Start >> Programs >> MUSE CV Info System >> Integrated Maintenance Suite >> Manual Backup**

31.3. Insert “MONDAY” tape.

31.4. Left click **Normal Daily**. Backup process will start.

31.5. Left click **Start >> Programs >> MUSE CV Info System >> Integrated Maintenance Suite >> Manual Backup**

31.6. Insert “MONTHLY SERVICE” tape.

31.7. Left click **Monthly Backup**. Backup process will start.

Note: Check MUSE error log to verify backups ran correctly.

31.8. **CONVERSION INSTALL ONLY**

31.8.1. Left click **Start >> Programs >> MUSE CV Info System >> Integrated Maintenance Suite >> Advanced**

31.8.2. Insert “CONVERSION” tape.

31.8.3. 5A INSTALLS: Left click **Backup Archive >> Backup Paths**
5B INSTALLS: Left click **Backup Archive >> Do Manual Backup**

31.8.4. Highlight all volumes.

31.8.5. Left click **OK**. Backup process will start.

Note: If volumes are large enough this process may ask for multiple tapes to be inserted.

31.8.6. Upon completion, give tape to Conversion and let them visually inspect the system.

31.8.7. Multiple Archived Volumes

Note: Complete this section only if there are more then two volumes.

Note: Vol0 and Vol[with the greatest number] should not be selected. They are both active and will be done in the Daily Tape process. Only select the Vol’s that are in between these two. They are not active and will not be backed up unless told to do so. Also, for **every additional volume,** you must have **two** extra tapes that must be added to the sales order as separate line items.

For example, if you have the following scenario:
Vol0 → Template Volume – will be backed up in Daily Tape. Do not select.
Vol1 → Archive Volume – You will create two [2] VOLUME 1 tapes and backup.
Vol2 → Archive Volume – You will create two [2] VOLUME 2 tapes and backup.
Vol3 → Active Volume – will be backed up in Daily Tape. Do not select.

31.8.7.1. Left click **Start >> Programs >> MUSE CV Info System >> Integrated Maintenance Suite >> Advanced**

31.8.7.2. Insert VOLUME X tape.

Note: X = the number of the volume.

31.8.7.3. 5A INSTALLS: Left click **Backup Archive >> Backup Paths**
5B INSTALLS: Left click **Backup Archive >> Do Manual Backup**

31.8.7.4. Highlight the appropriate VolX.

31.8.7.5. Left click **OK**. Backup process will start.

31.8.7.6. Upon completion, remove tape, put in the second tape and repeat section. If there are more volumes to backup, like in the example, repeat this section. For every volume there should be two identical backup tapes that will be **sent** to the customer.

32. REMOVE TEMPORARY USERS

FOR MEMBER SERVER INSTALL ONLY

32.1. Log in as **Administrator**. In the "Domain" pull down box select **MUSE$$$XXX**

32.2. Left click **Start >> Programs >> Administrative Tools >> User Manager for Domains**.

32.3. Left double-click "MUSE Users" in bottom window.

32.3.1. Select all users and left click **Remove**.
32.3.2. Left click **OK**.

32.4. Left double-click "Administrators" in bottom window.

32.4.1. Select all users, except for Administrator, and left click **Remove**.
32.4.2. Left click **OK**.

32.5. Left double-click "Users" in bottom window.

32.5.1. Select all users, except the Administrator, and left click **Remove**.
32.5.2. Left click **OK**.

32.6. Left click **Policies >> User Rights**.

32.6.1. Left click check box “Show Advanced Users Rights”
32.6.2. Pull down “Right” menu, select **Log on as a Batch Job**.
32.6.3. Select “MUSE Background” user and left click **Remove**.
32.6.4. Pull down “Right” menu, select **Log on as a Service**.
32.6.5. Select all users and left click **Remove**.
32.6.6. Left click **OK**.

32.7. Close “User Manager” window.

****
NOTE: AT THIS POINT, YOU ARE READY TO SHIP THE SYSTEM.
REFERENCE TP MUSE 5A FOR PROPER SHIPPING INSTRUCTIONS.
****

marquette
A GE Medical Systems Company

AP 901107-XXX
REV P

assembly procedure

title: **MUSE RAID/RACK FILE SERVER**

revision section

rev	effective date	section changed	reason for change
			Please see Rev. L for previous cover sheet listings.
M	03 Jun 1999	22.6 (added)	Added section to install Any Point releases in 5B.
N	09 Jul 1999	ALL	Added NT SP4, IE 4.01 SP2, Compaq Insight Manager 4.22
P	29 Jul 1999	19, 22.3.7.....	Changed Section title; Added new Install Shield prompt window.

approval section for revision #	P	page 1 of 53	
revision author:	Leon Milbeck	date	07/13/1999
design engineering:	John Moehrke	date	07/29/1999
manufacturing engineering:	Leon Milbeck	date	07/29/1999

originator: Leon Milbeck date: 31 July 1998

MUSE RAID/RACK FILE SERVER

Table of Contents

SECTION	DESCRIPTION	PAGE
1.	PURPOSE	3
2.	SCOPE	3
3.	RELATED DOCUMENTS	3
4.	EQUIPMENT REQUIRED	3
5.	SPECIAL CONDITIONS	3
6.	PROCEDURE	3
7.	WINNT40 SERVER INSTALLATION	6
8.	COMPAQ INSIGHT MANAGER INSTALLATION AND CONFIGURATION	17
9.	CONFIGURING ADMINISTRATOR DESKTOP	23
10.	MICROSOFT INTERNET INFORMATION SERVER 4.0 INSTALLATION	24
11.	INSTALLING NETWORK PRINTER SUPPORT	24
12.	DISKEEPER FOR WINDOWS NT SERVER 4.0 INSTALLATION	25
13.	PCANYWHERE32 8.0 INSTALLATION	27
14.	NT 4.0 SERVER RESOURCE KIT INSTALLATION	29
15.	ST. BERNARD'S OPEN FILE MANAGER VERSION 5.1 INSTALLATION	30
16.	BTRIEVE 7.0 INSTALLATION – **5B ONLY**	31
17.	BTRIEVE 6.15 INSTALLATION – **5A ONLY**	32
18.	VISUAL BASIC 4 INSTALLATION **– 5A ONLY**	32
19.	MUSE MAIL MESSAGING INSTALLATION	33
20.	MUSE SOFTWARE INSTALLATION **– 5A ONLY**	34
21.	MUSE SOFTWARE INSTALLATION **– 5B ONLY**	37
22.	TESTING THE MUSE CV WEB INSTALLATION	39
23.	SETTING UP MUSE ENVIRONMENT	41
24.	CONFIGURING MUSEADMIN DESKTOP	46
25.	BURN–IN PROCEDURE	47
26.	CLEANUP	47
27.	CREATING AN EMERGENCY REPAIR DISK	48
28.	TAPE BACKUP	49
29.	REMOVE TEMPORARY USERS	50
30.	SET SCREEN RESOLUTION	51
31.	CONFIGURING THE COMPAQ UPS	51
APPENDIX		53

1. PURPOSE

This procedure is intended as a guideline for the assembly of the following MUSE products:

1.1. MUSE RAID File Server 421519–101
1.2. MUSE RACK/RAID File Server with UPS 100–120V 421519–102
1.3. MUSE RACK/RAID File Server with UPS 200–240V 421519–103

Based on what is called out on the customer order and the new OMAR structure, a technician will be able to reference this document in order to create a system with Windows NT 4.0 as its operating system.

2. SCOPE

This document applies to the Marquette Medical Systems (MMS) – Milwaukee manufacturing operation.

3. RELATED DOCUMENTS

3.1. ..... MUSE Network Series Manual
3.2. QS1004 ..... Product Burn–In Guidelines
3.3. QS1003 ..... Quality Assurance Device History Record Guidelines
3.4. TP–MUSE 5A ..... MUSE 5A Test Procedure
3.5. MF1348 ..... PC to PC MUSE & Conversion Check–off Sheet
3.6. MF1349 ..... DEC to PC MUSE & Conversion Check–off Sheet

4. EQUIPMENT REQUIRED

All equipment is “OR EQUIVALENT”

4.1. Complete MUSE Tower File Server Customer Order
4.2. MUSE Software CD 5A 420858–001
4.3. MUSE Software CD 5B 422436-001
4.4. Compaq SmartStart CD 421856–003
4.5. Compaq Management CD 421854–003
4.6. Compaq Network Interface Card Drivers 422723–001

5. SPECIAL CONDITIONS

None

6. PROCEDURE

6.1. Assembly of Vendor Equipment

6.1.1. Connect UPS power cord into 220 VAC 50–60 HZ outlet or special 115 VAC 30 Amp L5–30 type receptacle depending on the UPS type.

6.1.2. Connect the monitor signal cable to the Keyboard/Monitor/Mouse Switch Box (KVM Switch Box) monitor connector.

6.1.3. Connect the power cord from the monitor to an open receptacle on the UPS. Use the power cord supplied with the monitor or a power cord supplied with the UPS depending on the UPS type.

6.2. Configuring the Compaq Server

6.2.1. Power–up the system.

6.2.2. Load the Compaq SmartStart CD into the CD–ROM drive immediately after power–up.

Note: The SmartStart CD is a bootable CD. The system will boot–up using this CD to run the initial setup utilities.

6.2.3. **<F1>** to continue.

6.2.4. Left click “Run System Erase Utility” icon, left click **OK**.

6.2.5. At the “Warning” prompt left click **Yes**.

Note: SmartStart will now erase any previous system setup.

6.2.6. At the “System has been erased. Cycle system power now” screen, cycle power on the system.

Note: The system will again boot–up from the SmartStart CD in order to continue with the initial setup.

6.2.7. At the Language selection screen, left click the **English** button.

6.2.8. At the Country/Time Selection screen, verify “United States” is selected for both the country and the keyboard, set the appropriate Date and Time according to where the system is going, left click **Next**.

Note: PM time should be entered in Military (24) time.

6.2.9. At the Systems Settings Summary screen left click **Continue**.

6.2.10. At the SmartStart License Screen left click the “I Agree” check box, left click **OK**.

6.2.11. At the SmartStart Path Screen left click the “Manual Configuration” installation path radio button, left click **Begin**.

6.2.12. At the Operating System Settings screen left double–click the “Microsoft” folder and left click the “Microsoft Windows NT Server version 4.0 – English” check box.

Note: This is the first check box under the Microsoft folder.

6.2.13. Left click **Next**.

6.2.14. Left click **Continue**.

6.2.15. Verify “Continue with SmartStart” is selected. **<ENTER>**

6.2.16. At the “Reboot” screen. **<ENTER>**

6.2.17. At the “Unconfigured Controller” screen left click **Next**.

6.2.18. At the “Operating System Settings” screen verify “Microsoft Windows NT 3.5X, 4.0 or later” is selected, left click **Next**.

6.2.19. Verify “**(RAID 5)…**” radio button is selected, and the “Use Online Spare” check box is selected, left click **Next**.

6.2.20. Left click **Next** to accept the configuration.

6.2.21. Left click **Done**.

6.2.22. Left click **Controller >> Save Configuration**.

6.2.23. Left click **Controller >> Exit**.

Note: The system will reboot and automatically run through some configuration setups for a minute or two before the next step.

6.2.24. At the “Disk Builder” screen left click **Next**.

6.2.25. Remove the SmartStart CD from the CD–ROM drive.

Note: Since the SmartStart CD is a bootable CD, it must be **removed** from the CD–ROM drive. If it is only ejected from the CD–ROM drive and the system is subsequently rebooted, the CD–ROM drive will automatically reload any CD that has not been removed from the drive when it initializes at boot time.

6.2.26. Left click **Continue** to begin the operating system setup. The system will reboot.

6.3. Configuring the KVM Switch Box

Note: Perform the following ONLY IF the RACK option is being assembled. If not, go to section “**WINNT4.0 SERVER INSTALLATION**”.

6.3.1. **<Print Scrn>** to access the Console Configuration Reporting (CCR) interface.

6.3.2. At the “CCR Selection” screen **<F2>**

6.3.3. Press the **<RIGHT>** arrow key to move the highlight to the setup menu.

6.3.4. Using the **<UP>** and **<DOWN>** arrow keys, move the highlight to **NAMES**. **<ENTER>**

6.3.5. With the highlight on the **Port1** name (“COMPUTER 1” by default), type **FILE SERVER**.

6.3.6. **<ENTER>** to save the new name.

6.3.7. Using the **<UP>** and **<DOWN>** arrow keys, move the highlight to **FLAG**. **<ENTER>**

6.3.8. At the "Flag Attributes" screen, highlight the **Enabled** setting and change it to "NAMES TIMED" by using the <+> and <–> keys to adjust the value.

6.3.9. **<ENTER>** to save the changed value.

6.3.10. **<ESC>** to exit CCR.

7. WINNT40 SERVER INSTALLATION (PRIMARY DOMAIN CONTROLLER AND MEMBER)

7.1. Installing Windows NT Server 4.0

7.1.1. Boot Strapping

7.1.1.1. Boot up your system.

7.1.1.2. Load the Windows NT 4.0 Server compact disk into the CD–ROM drive.

7.1.1.3. At the "Welcome to Setup" screen. **<ENTER>**

7.1.1.4. At the "Setup has recognized the following mass storage devices..." screen. **<ENTER>**

7.1.1.5. At the "Setup has determined that one or more of your hard disks has more than 1024 cylinders..." screen. **<ENTER>**

7.1.1.6. At the "Windows NT Licensing Agreement" screen **<Page Down>** repeatedly to read the license and **F8** to agree.

7.1.1.7. At the "Setup has determined that your computer contains the following..." screen. **<ENTER>**

7.1.1.8. At the "The list below shows existing partitions and space available..." screen, ARROW DOWN to select "Unpartitioned Space" press **C**

7.1.1.9. At the "You have asked Setup…" screen, **backspace** to clear the present entry and type **2048** to create a 2GB C drive. **<ENTER>**

7.1.1.10. At the "The list below shows existing partitions and space available..." screen, select "New (Unformatted)". **<ENTER>**

7.1.1.11. At the "The partition you have chosen is newly created..." screen, select "Format the partition using the NTFS file system." **<ENTER>**

7.1.1.12. At the "Setup installs Windows NT files onto your hard disk..." screen. **<ENTER>**

Note: Verify that the default directory is **WINNT**.

7.1.1.13. At the "Setup will now examine your hard disk(s)..." screen. **<ENTER>**

Note: Setup will now start copying files.

7.1.1.14. At the "This portion of Setup has completed..." screen, remove the Windows NT 4.0 CD from the CD–ROM drive. **<ENTER>**

Note: System will reboot twice to properly format all drives.

7.1.2. Gathering Information About Your Computer

7.1.2.1. Reinsert the Windows NT Server CD when prompted, wait One (1) minute, and click **OK**. Setup will copy files to your hard drive.

7.1.2.2. At the "Welcome to the Windows NT Setup Wizard..." screen, left click **Next** to begin "1) Gathering information about your computer".

7.1.2.3. At the "Name and Organization" screen, enter the hospital name in the **Name** Field. In the **Organization** field, enter the name of the organization the hospital is affiliated with, if the hospital is not affiliated with an organization, enter the hospital name again. Left click **Next**.

7.1.2.4. When prompted, enter the CD key number from the certificate, Left click **Next**.

7.1.2.5. Verify the radio button "Per Server for" is selected and based on the number of Btrieve licenses purchased; select the appropriate number for "concurrent connections." Left click **Next**.

7.1.2.6. At the "Computer Name" screen, enter **MUSE$$$XXX** in the Name field – where $$$ is an acronym for the hospital and XXX is the MUSE node number of the computer.

Note: This value represents the name of the computer. Reference the Pre–Build Survey to verify this is correct.

7.1.2.7. Left click **Next**.

7.1.2.8. Perform one of the following based on the File Server:

PRIMARY DOMAIN CONTROLLER INSTALL ONLY

At the “Server Type” screen, select the “Primary Domain Controller” radio button. Left click **Next**.

MEMBER SERVER INSTALL ONLY

At the “Server Type” screen, select the “Stand–Alone Server” radio button. Left click **Next**.

7.1.2.9. At the “Administrator Account” screen, type in the password **Never!Mind** in both edit fields.

Note: The password is case sensitive.

7.1.2.10. Left click **Next**.

7.1.2.11. At the “Emergency Repair Disk” screen, select “No, do not create...” radio button. Left click **Next**.

7.1.2.12. At the “Select Components” screen do the following:

Note: The shortcut to selecting all features is to **Uncheck** the appropriate box and re–check the same box with a single left click**.** Do this slowly so you don't cause a double–click.

The “Accessibility Options” box should be empty.
The “Accessories” box should be white with a black check.
Verify that the “Communications” box is white with a black check.
The “Games” check box should be empty.
The “Multimedia” box should be white with a black check.
The “Windows Messaging” box will be gray with a black check after performing the following steps:
Left double–click the “Windows Messaging” text.

The “Windows Messaging” check box should be checked.
The “Internet Mail” check box should be checked.
The “Microsoft Mail” check box should be **Unchecked**.

Left click **OK.**

7.1.2.13. Left click **Next**.

7.1.3. Installing Windows NT Networking

7.1.3.1. At the “Setup is now ready to guide you through installation...” screen, Left click **Next** to begin “2) Installing Windows NT Networking”.

7.1.3.2. At the “Windows NT needs to know how this computer should participate on a network...” screen, verify “Wired to the network” is selected. Left click **Next**.

7.1.3.3. At the “Microsoft Internet Information Server lets you share...” screen, **Uncheck** the box “Install Microsoft Internet Information Server”. Left click **Next**.

7.1.3.4. At the “To have setup start searching for a network Adapter...” screen, Left click **Select from list**.

7.1.3.5. Left click **Have Disk…**

7.1.3.6. Insert 422723–001 into the floppy disk drive, left click **OK**.

7.1.3.7. Verify that “Compaq Netelligent 10 or 10/100 PCI Intel Controller” is selected, left click **OK**.

7.1.3.8. Left click **Next**.

7.1.3.9. At the “Select the networking protocols that are used...” screen, **Uncheck** all network protocols except for “TCP/IP Protocol”. Left click **Next**.

7.1.3.10. At the “Listed below are the service that will be installed...” screen, left click the **Select from list** button to add the following additional services.

Select “Microsoft TCP/IP Printing” and left click **OK**.
Select “Network Monitor Tools and Agent” and left click **OK**.
Select “SNMP Service” and left click **OK**.

Left click **Next**.

7.1.3.11. At the “Windows NT is now ready to install networking components...” screen left click **Next**.

7.1.3.12. At the “CPQSET” window, left click **OK**.

7.1.3.13. Perform one of the following based on the File Server:

PRIMARY DOMAIN CONTROLLER INSTALL ONLY
At the “If there is a DHCP server on your network...” message box left click **No**.

MEMBER SERVER INSTALL ONLY

At the “If there is a DHCP server on your network...” message box left click **Yes**.

Note: System must be attached to MEI network backbone.

7.1.3.14. Configuring SNMP Service.

7.1.3.14.1. At the “Microsoft SNMP Properties” screen, select the “Traps” tab.

7.1.3.14.2. Type **public** in the “Community Name” field box and left click **Add**.

7.1.3.14.3. Left click the **Add…** button under the “Trap Destinations” list box.

7.1.3.14.4. In the “IP Host or IPX Address:” field, type **MUSE$$$XXX**.

Note: MUSE$$$XXX = Local Computer Name.

7.1.3.14.5. Left click **Add**.

7.1.3.14.6. Left click **OK**.

7.1.3.15. Perform the following based on the File Server:

PRIMARY DOMAIN CONTROLLER INSTALL ONLY

At the “Microsoft TCP/IP Properties” window, fill in the following fields with the appropriate data
Note: Reference the Pre–build survey to verify these IP’s.

IP Address: **128.9.9.1**
Subnet Mask:..... **255.255.0.0**

Left click **OK**.

7.1.3.16. At the “You may use this page to disable network bindings…” screen, left click **Next**.

7.1.3.17. Left click **Next** to start the network.

7.1.3.18. Perform one of the following based on the File Server:

Note: Reference the Pre–Build Survey to verify this is correct.

PRIMARY DOMAIN CONTROLLER INSTALL ONLY

At the “You have requested that Windows NT create a Primary Domain Controller…” screen, enter **MUSE$$$** (where $$$ is the acronym for the hospital) in the Domain field. Left click **Next**.

Note: This is the Domain name you are creating for the hospital. This may take a few minutes to register.

MEMBER SERVER INSTALL ONLY

At the "Select whether your computer will be participating in a workgroup or domain…" screen, Verify "Computer Name" is correct.

Left click "Domain" radio button.
Type **MUSESIG**
Left click on "Create a Computer Account in the Domain" check box.
Left click **Next**
In the "User Name" field, type **MuseAdmin**
In the "Password" field, type **Muse!Admin**

Left click **OK**

7.1.4. Finishing Setup

7.1.4.1. At the "Setup is almost finished..." screen, left click **Finish** to begin "3) Finishing Setup".

7.1.4.2. At the "Date/Time Properties" property page set the date, time, and time zone appropriately to where the machine is going. Left click **Close**.

7.1.4.3. At the "Detected Display" message box, left click **OK**.

7.1.4.4. Left click **OK**.

7.1.4.5. At the "Windows NT has been installed successfully..." screen, remove the Windows NT 4.0 Server CD from the CD–ROM drive and remove 422723–001 from the floppy disk drive.

7.1.4.6. Left click **Restart Computer**.

7.2. Move the CD drive letter to Z:

7.2.1. Log in as **Administrator**.

Note: You must press <CTRL><ALT><DEL> to logon.

Perform one of the following based on the File Server:

PRIMARY DOMAIN CONTROLLER INSTALL ONLY
In the "Domain" pull down box, select **MUSE$$$**

MEMBER SERVER INSTALL ONLY
In the "Domain" pull down box, select **MUSE$$$XXX**

Note: MUSE$$$XXX = Local Computer Name

7.2.2. Type for password **Never!Mind**

7.2.3. At the "Welcome" window left click **Close**

7.2.4. Left click **Start** >> **Programs** >> **Administrative Tools** >> **Disk Administrator**.

7.2.5. Left click **OK** if its the first time its been used.

7.2.6. Left click the "CD–ROM 0" box.

Note: Present drive letter is D:

7.2.7. Left click **Tools** >> **Assign Drive Letter**.

7.2.8. Pull down "Assign Drive Letter" and select **Z:** and left click **OK**.

7.2.9. Left click **Yes** to the "This new drive letter will happen immediately dialog."

7.3. Partition and format D: drive

7.3.1. Left click "Free Space" area in Disk 0.

7.3.2. Left click **Partition** >> **Create Extended**.

7.3.3. Left click **OK**. Left click **Yes**.

7.3.4. Left click "Free Space" area in Disk 0.

7.3.5. Left click **Partition** >> **Create**.

7.3.6. Verify that maximum size value is entered for logical drive. Left click **OK**.

7.3.7. Left click **Partition** >> **Commit Changes Now…**

7.3.8. At the "Changes have been made to your hard disk configuration…" screen, left click **Yes**.

7.3.9. At the "Disks were updated successfully" screen, left click **OK**.

7.3.10. Left click the "D:" unknown area in Disk 0.

7.3.11. Left click **Tools** >> **Format**.

7.3.12. Pull down "File System" and select "NTFS".

7.3.13. Left click **Start**.

7.3.14. Left click **OK** to "Warning…"

7.3.15. Left click **OK** to "Format complete."

7.3.16. Left click **Close**.

7.3.17. Close "Disk Administrator" window.

7.4. Disable CD Autoplay and Update NT Source Path

7.4.1. Insert the MUSE Software CD into the CD–ROM drive.

7.4.2. Left click **Start** >> **Run**.

7.4.3. Type **REGEDIT Z:\REG\CD_CHNGS.REG** and left click **OK**.

7.4.4. Left click **OK** at the Registry Editor message box.

7.4.5. Remove the MUSE Software CD.

7.5. Install Compaq Support Software for Microsoft Windows NT 4.0

7.5.1. Load the Compaq SmartStart CD into the CD–ROM drive.

7.5.2. If the Compaq Diskette Builder window appears, close it.

7.5.3. Left click **Start** >> **Run**.

7.5.4. Type **Z:\CPQSUPSW\NTSSD\SETUP.EXE** and left click **OK**.

7.5.5. Select “Compaq System Management Driver”, left click **Install**.

7.5.6. Select “Compaq SMART/SMART–2 Array Controller”, left click **Update**.

7.5.7. At the “Compaq offers high availability…” screen, left click **OK**.

7.5.8. Select “Compaq Integrated Management Log Viewer”. Left click **Install**.

7.5.9. Select “Compaq SCSI Controllers”, left click **Install**.

7.5.10. Select “Compaq Ethernet or Fast Ethernet Controller(s)”, left click **Update**.

7.5.11. Select “ATI RAGE IIC Video Display Controller”, left click **Install**.

7.5.12. Select “Compaq Array Configuration Utility”, left click **Install**.

7.5.13. At the “Compaq Array…” prompt left click **OK**.

7.5.14. Remove the Compaq SmartStart CD from the CD–ROM drive.

7.5.15. Load the NT 4.0 Server CD into the CD–ROM drive.

7.5.16. Close the “Windows NT CD–ROM” window.

7.5.17. Select “HAL Recovery Option”, left click **Install**.

7.5.18. When the system is finished copying the required files, left click **Exit** to close Setup.

7.5.19. Remove the NT 4.0 Server CD and left click **Reboot**.

7.6. Configure Display Settings

7.6.1. Log in as **Administrator**.

7.6.2. At the “Welcome” window, uncheck the “Show this welcome…” box and left click **Close**.

7.6.3. At the “Invalid Display Settings” message box, left click **OK**.

7.6.4. Configure the Settings in Display Properties as follows:

Desktop Area..... **1024 by 768 pixels**
Color Palette..... **256 Colors**
Refresh Frequency..... **75 Hertz**

7.6.5. Left click the **Test** button and verify the settings.

7.6.6. Left click **OK** to save and exit.

7.7. Installing Tape Device

7.7.1. Load the NT 4.0 Server CD into the CD–ROM drive.

7.7.2. Left click **Start** >> **Settings** >> **Control Panel** >> **Tape Devices**.

7.7.3. At the “New SCSI Tape Device Found” message box, left click **OK**. Files will be copied to system.

7.7.4. At the “Tape Devices” property page, verify HPC1537A is selected, left click **OK**.

7.7.5. Close “Control Panel” window.

7.7.6. Remove the Windows NT 4.0 Server CD from the CD–ROM drive.

7.8. Installing Digi Controller Driver

7.8.1. Insert the MUSE Software CD into the CD–ROM drive.

7.8.2. Left click **Start** >> **Run**

7.8.3. Type **Z:\DIGI\V240\WINNT\INSTALL.BAT** and left click **OK.**

7.8.4. While pressing **<Alt>** left double–click the **Network Neighborhood** icon on the desktop.

7.8.5. At the “Network” setup screen left click the “Adapters” tab.

7.8.6. Left click **Add…**

7.8.7. At the “Select Network Adapter” screen left click **Have Disk…**

7.8.8. At the “Insert Disk” screen, clear the edit box and type **C:\TEMP\WINNT\I386** and left click **OK**.

7.8.9. At the “Select OEM Option” screen select “Digi AccelePort 8r 920 (PCI) Adapter” from the list, left click **OK**.

7.8.10. At the “Digi 8r 920(PCI) Adapter Setup” screen left click **OK**.

7.8.11. Left click **Close**.

7.8.12. At the “Do you want to restart your computer now?” prompt, left click **No**.

7.8.13. Left click **Start** >> **Run**

7.8.14. Type **Z:\DIGI\V240\WINNT\REMOVE.BAT** and left click **OK.**

7.9. Installing Windows NT Server 4.0 SP4 and Microsoft Data Access Components 2.0 SP1

7.9.1. Left click **Start** >> **Run**

7.9.2. Type **Z:\BAT\SP4MDAC.BAT** and left click **OK**.

Note: System will automatically copy files and setup apps.

7.9.3. At the “Microsoft Windows Year 2000...” prompt, left click **Yes** to restart system.

7.10. Installing Internet Explorer 4.01 SP2

7.10.1. Log in as **Administrator**.

7.10.2. Left click **Start** >> **Run**

7.10.3. Type **Z:\BAT\IE401SP2.BAT** and left click **OK**.

Note: System will automatically copy files, setup apps and restart system.

7.11. Setting up the environment

7.11.1. Log in as **Administrator**.

7.11.2. Close the “Welcome – Microsoft Internet Explorer” window.

7.11.3. Enable Schedule Service to startup automatically and stop Licensing.

7.11.3.1. Left click **Start** >> **Settings** >> **Control Panel** >> **Services**.
7.11.3.2. Left click on “Schedule”.
7.11.3.3. Left click **Startup** and set the radio button **AUTOMATIC**.
7.11.3.4. Left click **OK**.
7.11.3.5. Left click on “License Logging Service”
7.11.3.6. Left click **Startup** and set the radio button **DISABLED**.
7.11.3.7. Left click **OK**.

7.11.3.8. Left click **Close**.

7.11.4. Turn off debugging.

7.11.4.1. Left double–click the icon **System**.

7.11.4.2. Left click “Startup/Shutdown” tab.

7.11.4.3. Left click to uncheck the “Write debugging information to:” check box.

7.11.4.4. Left click **OK**.

7.11.4.5. Left click **NO** at the “System settings change” window.

7.11.5. Set the computer description

7.11.5.1. Left double–click the icon **Server**.

Perform one of the following based on the File Server:

PRIMARY DOMAIN CONTROLLER INSTALL ONLY

In the “Description” edit box type **MUSE$$$ PDC (MUSE File Server)**

Note: Where “MUSE$$$” is the name of the Primary Domain that was created during the NT network setup.

MEMBER SERVER INSTALL ONLY

In the “Description” edit box type **MUSE File Server**

7.11.5.2. Left click **OK**.

7.11.5.3. Close “Control Panel” window.

7.11.6. Turn on Auditing

7.11.6.1. Left click **Start** >> **Programs** >> **Administrative Tools** >> **User Manager for Domains**.

7.11.6.2. Left click **Policies** >> **Audit**.

7.11.6.3. Left click the radio button “Audit these Events.”

7.11.6.4. Fill out the matrix as follows:

	SUCCESS	FAILURE
Logon on Logoff		X
File and Object Access		
Use of User Rights		
User and Group Management		X
Security Policy Changes	X	X
Restart, Shutdown, and System	X	X
Process Tracking		X

7.11.6.5. Left click **OK** and close "User Manager" window.

7.11.6.6. Remove the MUSE Software CD.

8. COMPAQ INSIGHT MANAGER INSTALLATION AND CONFIGURATION

8.1. Install Management Agents

8.1.1. Load the Compaq Management CD into the CD–ROM drive.

8.1.2. Left click **Start >> Run**.

8.1.3. Type **Z:\AGENTS\WIN–NT\ENG\SETUP.CMD** and left click **OK**.

8.1.4. Left click **Continue**.

8.1.5. At the "Compaq Insight Manager has added…" prompt, left click **NO**.

8.1.6. Left click **OK** at the "Insight Agents…" screen.

8.1.7. Left click **OK** at the "Installation is now complete" message.

8.1.8. Left click **Exit to Windows NT**.

8.2. Install Management Console

8.2.1. Left click **Start >> Run**.

8.2.2. Type **Z:\INSIGHT\WIN32\ENG\SETUP.EXE** and left click **OK**.

8.2.3. Left click **Next**.

8.2.4. At the "Installing Borland Database Engine…" screen, left click **Next**.

8.2.5. At the "Name and Organization" screen, enter the hospital name in the **Name** Field. In the **Company** field, enter the name of the organization the hospital is affiliated with, if the hospital is not affiliated with an organization, enter the hospital name again.

Left click **Next**.

8.2.6. Left click **Yes** to confirm the Name and Company.

8.2.7. Verify "Compaq Insight Manager…" is the only box that is checked, left click **Next**.

8.2.8. Left click **Next** to the default location for Compaq Insight Manager.

8.2.9. Enter configuration options

8.2.9.1. Uncheck "Enable auto discovery of IPX servers"
8.2.9.2. Uncheck "Enable auto discovery of Remote Console NVT servers"

8.2.10. Left click **Next**.

8.2.11. Left click **Next** to default Program Folder.

8.2.12. Left click **Next** to the current settings.

8.2.13. When Installation is finished, uncheck "…view the Read Me file", left click **Finish**.

8.2.14. Close the "Compaq Insight Manager" program group window.

8.3. COMPAQ UPS Management Software Installation

Note: Perform the following ONLY IF the UPS option is included with the system**.**

Note: Check customer order to see if this is as an ordered option. If Yes, install the following. If not, go to section "**Remove the Compaq Management CD–ROM.**"

8.3.1. Install Compaq Power Management Software

8.3.1.1. Left click **Start >> Run**.

8.3.1.2. Type **Z:\CPQCPM\AGENTS\NT\ENG\SETUP.EXE** and left click **OK**.

8.3.1.3. Left click **Continue**.

8.3.1.4. Verify the "No" radio button is selected for the computer to be a part of a UPS group, left click **Continue**.

8.3.1.5. At the "Communications Port Selection" screen, verify the "Standard" radio button and **COM1** are selected. Left click **Continue**.

8.3.1.6. Set Shutdown Timing Options to the following:

Wink Time (Seconds)..... **60**
Power Failure Countdown Time (Minutes)..... **10**
Time Needed to Down System (Seconds)..... **90**

8.3.1.7. Left click **Continue**.

8.3.1.8. At the Install Path screen, left click **Continue**.

8.3.1.9. At the "The Compaq Power Management Software was successfully installed …" screen, left click **OK**.

8.3.1.10. Left click **OK** to the restart your computer prompt.

Note: System will not shut down at this time.

8.3.2. Install Power Management Console

8.3.2.1. Left click **Start >> Run**.

8.3.2.2. Type **Z:\CPQCPM\INSIGHT\ENG\SETUP.EXE** and left click **OK**.

8.3.2.3. At the "Welcome" screen, left click **Next**.

8.3.2.4. At the "Choose Destination Location" screen, left click **Next**.

8.3.2.5. At the "Information" screen, left click **OK**.

8.3.2.6. Left click **OK** to Setup is complete.

8.4. Remove the Compaq Management CD–ROM.

8.5. Restart the system.

8.5.1. Left click **Start >> Shut Down…**

8.5.2. Select the "Restart the computer?" radio button

8.5.3. Left click **Yes**. The system will reboot.

8.6. Configure Insight Manager

8.6.1. General Configuration

8.6.1.1. Log in as **Administrator**.

8.6.1.2. At the “Welcome to the Compaq Insight…” window, left click **Cancel**.

8.6.1.3. Uncheck the box “Show this next time…” and close the “Welcome – Microsoft Internet Explorer” window.

8.6.1.4. Configure SNMP Service

8.6.1.4.1. Left click **Start** >> **Settings** >> **Control Panel** >> **Network**.
8.6.1.4.2. Left click “Services” tab.
8.6.1.4.3. Left double-click **SNMP Service**
8.6.1.4.4. Left click “Security” tab.
8.6.1.4.5. In the “Accepted Community Names” window, left click **public** to highlight.
8.6.1.4.6. Left click **Edit**.
8.6.1.4.7. Left click the “Community Rights” pull down and select **READ WRITE**.
8.6.1.4.8. Left click **OK**.
8.6.1.4.9. Left click **OK**.
8.6.1.4.10. Left click **Close**.
8.6.1.4.11. Close “Control Panel” window.

8.6.1.5. Left click **Start** >> **Programs** >> **Compaq Insight Manager** >> **Compaq Insight Manager**

8.6.1.6. At the “Startup checklist” screen, check the “Don’t show this screen at startup” box located in the lower left–hand corner of the window, left click **OK**.

8.6.1.7. Left click **Setup** >> **Device List…**

8.6.1.8. Left click **IP Device List**.

Note: Do not choose the **IPX Device List**

8.6.1.9. Left click **New**.

8.6.1.10. In the **Device Name** field, enter **MUSE$$$XXX**

8.6.1.11. Left click the **“**WINS/DNS IP Address Resolution**”** check box, left click **Add**.

8.6.1.12. Left click **Close**.

8.6.1.13. At the “IP Device List” screen, left click **OK**.

8.6.1.14. At the “Device List Setup” screen, left click **OK**.

8.6.2. UPS Configuration

Note: Perform the following ONLY IF the UPS option is included with the system.

Note: Check customer order to see if this is as an ordered option. If Yes, install the following. If not, go to section "**Close the "Compaq Insight Manager" window.**"

8.6.2.1. UPS Configuration

8.6.2.1.1. In the "Device List 1" window, left double–click the "Network" folder, left double–click the "All Devices" folder.

8.6.2.1.2. Under "Device Name", locate **MUSE$$$XXX** and left double–click it.

8.6.2.1.3. Left click the **Recovery** button.

8.6.2.1.4. Left click the **UPS** button.

8.6.2.1.5. Left click the **Alert Handling** button.

8.6.2.1.6. Left click "0 –$MACHINE is on battery…. shutdown in $MINUTES mins"

8.6.2.1.7. Right click the **mouse icon** next to "Disabled" text underneath the "Execute Command" text and left click **Set** from the popup menu.

Note: When you place the cursor over the text "Disabled" a mouse cursor will appear. When this happens, right click to activate **Set** popup menu.

8.6.2.1.8. Left click the "Execute Command" check box and type in the edit field **UPS.BAT SHUTMUSE**

8.6.2.1.9. Left click **Set**. System will now store data.

8.6.2.1.10. Select "2 –$MACHINE shutdown has been cancelled"

8.6.2.1.11. Right click the **mouse icon** next to "Disabled" text underneath the "Execute Command" text and left click **Set** from the popup menu.

Note: When you place the cursor over the text "Disabled" a mouse cursor will appear. When this happens, right click to activate **Set** popup menu.

8.6.2.1.12. Left click the “Execute Command” check box and type in the edit field **UPS.BAT CANCEL**

8.6.2.1.13. Left click **Set**. System will now store data.

8.6.2.1.14. After Insight Manager is finished storing data, left click **Close**.

8.6.2.1.15. At the “UPS MUSE$$$XXX” screen, left click **Close**.

8.6.2.1.16. At the “MUSE$$$XXX Recovery” screen, left click the **Environment** button.

8.6.2.1.17. Right click the **mouse icon** next to “Shut Down” text next to the “Degraded Action:” text and left click **Set** from the popup menu.

8.6.2.1.18. Verify “New Value” is set to “Continue”

8.6.2.1.19. Left click **Set**.

8.6.2.1.20. Left click **Close**.

8.6.2.1.21. At the “MUSE$$$XXX Recovery” screen, left click **Close**.

8.6.2.1.22. At the “Device – MUSE$$$XXX” screen, left click **Close**.

8.6.3. Close the “Compaq Insight Manager” window.

8.6.4. Add Insight Manager to Start–Up Group

Note: After performing this section the Insight Manager will launch every time you restart NT. You must minimize the application when this happens, for it needs to be active at all times.

8.6.4.1. Insert the MUSE Software CD into the CD–ROM drive.

8.6.4.2. Left click **Start** >> **Run**.

8.6.4.3. Type **CMD /K Z:\BAT\IM2STUP.BAT SETUP.EXE** and left click **OK**.

8.6.4.4. Left click **Start** >> **Programs** >> **Startup**, verify that Compaq Insight Manager appears as one of the links inside the Startup group. Close all visible windows.

Note: Be sure to check the common Startup group, not the current user Startup group. The common Startup group is the one closest to the bottom of the Programs submenu.

8.7. Clear the Compaq Integrated Management Log.

8.7.1. Left click **Start >> Programs >> Compaq System Tools >> Compaq Integrated Management Log Viewer**

8.7.2. Left click **Log >> Clear All Entries**

8.7.3. Left click **Clear.**

8.7.4. Left click **Yes.**

8.7.5. Close the "Compaq Integrated Management Log View" window.

9. CONFIGURING ADMINISTRATOR DESKTOP

9.1. Set the screen saver.

9.1.1. Right click on the desktop, left click **Properties**.
9.1.2. Left click the "Screen Saver" tab.
9.1.3. Choose the **Logon Screen Saver** from "Screen Saver" pull down menu.
9.1.4. Left click "Password Protected" check box.
9.1.5. Verify "Wait" is set to **15** minutes.
9.1.6. Left click **OK** to exit.

9.2. Move the Desktop icons to the Recycle Bin.

9.2.1. Right click on icon **My Briefcase** and select **Delete**.
9.2.2. Left click **Yes** to confirm delete.
9.2.3. Right click on icon **Install Internet Information…** and select **Delete**.
9.2.4. Left click **Yes** to confirm delete.

9.3. Set the taskbar options

9.3.1. Left click **Start >> Settings >> Taskbar…**
9.3.2. Verify "Always on top" is selected.
9.3.3. Left click "Show small icons in Start menu."
9.3.4. Verify "Show Clock" is selected.
9.3.5. Left click **OK** to exit.

9.4. Set the Explorer Options

9.4.1. Left double–click "My Computer" icon.
9.4.2. Left click **View >> Toolbar**. Toolbar should appear in window.
9.4.3. Left click **View >> Options…**
9.4.4. Left click the radio button "Browse folders by using a single window that changes as you open each folder."
9.4.5. Left click the "View" tab.

9.4.6. Left click the radio button “Show all files.”
9.4.7. Left click the check button “Display the full path in the title bar.”
9.4.8. Un–select “Hide file extensions for known file types.”
9.4.9. Left click the check button “Display compressed files and folders with alternate color.”
9.4.10. Left click **OK**. Close “My Computer” window.

9.5. Set the command prompt options

9.5.1. Left click **Start** >> **Settings** >> **Control Panel** >> **Console**.
9.5.2. Left click the “Options” tab. Default.
9.5.3. Left click the radio button “Large.”
9.5.4. Left click the “Layout” tab.
9.5.5. Enter **80** for the “Screen Buffer Size Width”. Default.
9.5.6. Enter **50** for the “Screen Buffer Size Height”.
9.5.7. Enter **80** for the “Window Size Width”. Default.
9.5.8. Enter **50** for the “Window Size Height”.
9.5.9. Left click **OK**. Close “Control Panel” window.

10. MICROSOFT INTERNET INFORMATION SERVER 4.0 INSTALLATION

10.1. Make sure that the MUSE Software CD is in the CD–ROM drive.

10.2. Left click **Start** >> **Run**

10.3. Type **Z:\MUSEWEB\SETUP.CMD** and left click **OK**.

10.4. At the “Setup” prompt, left click **Yes**.

10.5. At the “Setup” prompt, left click **Yes**.

Note: Setup window will appear and start copying files. This procedure will last for about 5–7 minutes. It will automatically reboot the system.

11. INSTALLING NETWORK PRINTER SUPPORT

Note: The following conditions must be met before continuing on with this section:
The printer must be configured using Jet Admin on the RSS Test PC.
If PDC: A printer connected to the Switch with an IP and Gateway set.
If Member: A printer connected to the MEI network with a known name.
Check customer order to see if it is called out as an option.

11.1. Log in as Administrator.

11.2. Left click **Start** >> **Settings** >> **Printers**

11.3. Left double–click icon **Add Printer**.

11.4. At the “Add Printer Wizard” screen, verify the radio button “My Computer” is selected. Left click **Next**.

11.5. Left click **Add Port**.

11.6. From the "Available Printer Ports" section, left click **LPR Port**.

11.7. Left click **New Port**.

11.8. Perform one of the following based on the File Server:

PRIMARY DOMAIN CONTROLLER INSTALL In the "Name or address…" edit field type **XXX.XXX.XXX.XXX** **Note**: XXX.XXX.XXX.XXX = the IP of the Printer.

MEMBER SERVER INSTALL In the "Name or address…" edit field type **$$$$$$$$$$** **Note**: **$$$$$$$$$$** = the name of the Printer based on Menu Printout.

11.9. In the "Name of printer or print…" edit field type **raw**.

11.10. Left click **OK**. Left click **Close**.

11.11. Left click **Next**.

11.12. Left click **Have Disk**.

11.13. Type **Z:\HPPRINT\NT** and left click **OK**.

11.14. Left click **HP LaserJet 4000 Series PS** in the "Printers" section.

11.15. Left click **Next**.

11.16. In the "Printer Name" section, type a unique name for the printer.

Note: Default name should suffice unless otherwise stated by Pre–Build Survey.

11.17. Left click **Next**.

11.18. Left click the radio button "Shared" and type in the edit a unique name.

Note: For one (1) printer, use **LJ4K01**. If more, increase number.
Default name should suffice unless otherwise stated by Pre–Build Survey.

11.19. Left click **Next**.

11.20. Verify the radio button **Yes** is selected and left click **Finish** to print a test page.

11.21. If the page printed successfully, left click **Yes**. If not left click **NO** and follow the instructions to troubleshoot the problem.

11.22. Close all visible windows.

12. DISKEEPER FOR WINDOWS NT SERVER 4.0 INSTALLATION

12.1. Make sure that you are logged in as **Administrator**.

12.2. Make sure that the MUSE Software CD is in the CD–ROM drive.

12.3. Left click **Start** >> **Run**.

12.4. Type **Z:\DISKPR\V40\X86\SETUP.EXE** and left click **OK**.

12.5. At the “Welcome” screen, left click **Next**.

12.6. At the “Software License Agreement” screen, left click **Yes**.

12.7. At the “Choose Destination Location” screen, verify default directory is **C:\ExecSoft\Diskeep** and left click **Next**.

12.8. At the “Choose Destination Location” screen, verify “Diskeeper” is program folder and left click **Next**.

12.9. At the “Registration” screen, left click **Next**.

12.10. Left click the check box “Yes, I want to Launch Diskeeper.”

12.11. Left click **Finish**.

12.12. Left click **Close** in the “Welcome window.”

12.13. Left click **Options** >> **Event Logging**.
Verify/change the following table:

X	Service Start and Stop
X	Defrag Start and Stop
	Defrag Files
	Moved Files
	Disk Information
	File Information
	Directory Information
	Pagefile Information
	MFT Information

12.14. Left click **OK**.

12.15. Close the “Diskeeper” window.

12.16. Diskeeper 4.1 Patch Installation

12.16.1. Left click **Start** >> **Run**.
12.16.2. Type **Z:\DISKPR\V40\X86\PATCH\DK4UPDATE_I.EXE** and left click **OK**.
12.16.3. At the “Welcome” screen, left click **Finish**.
12.16.4. Left click **Next**.

12.16.5. Left click **Yes**.
12.16.6. Left click **Finish**.

13. PCANYWHERE32 8.0 INSTALLATION

Note: The following condition must be met before continuing on with this section:
A 56K MultiTech modem attached to COM2 of the server.

13.1. Installing main program.

13.1.1. Remove the MUSE Software CD. Insert the pcAnywhere CD into the CD–ROM drive.

13.1.2. Left click **Start >> Run**.

13.1.3. Type **Z:\CDINST.EXE** and left click **OK**.

13.1.4. Highlight and left click on the **Install Software** option in the "pcAnywhere CD–ROM installation Utility."

13.1.5. At the "Welcome" screen left click **Next**.

13.1.6. At the "User Information" screen Enter/Verify information, left click **Next**.

13.1.7. Read/verify the license agreement and left click **Yes**.

13.1.8. Accept the destination directory location and left click **Next**. Verify default directory is **C:\Program Files\pcANYWHERE**.

13.1.9. Review the setup information on the "Setup Review" screen and left click **Next**. Program will begin installing file to the computer.

13.1.10. Left click **Next** on "Symantec Support Solutions" screen.

13.1.11. Left click **Next** on "How to Reach Us" screen.

13.1.12. Left click **Next** on "Windows 95 Solutions" screen.

13.1.13. Left click **Skip** on "Online registration" screen.

13.1.14. Left click **No** to skip viewing the Readme file.

13.1.15. Left click **Finish** to restart the computer.

13.1.16. Remove the pcAnywhere CD from drive.

13.2. Installing pcAnywhere Host Service

13.2.1. Make sure the MUSE Software CD is in the CD–ROM drive.

13.2.2. Log in as **Administrator**.

13.2.3. Left click **Start >> Programs >> pcANYWHERE32 >> pcANYWHERE**.

13.2.4. If "Smart Setup Modem" window appears, do the following:

13.2.4.1. Left click **Add Modem**.

13.2.4.2. Left click check box "Don't detect my modem…" Left click **Next**.

13.2.4.3. Left click **Have Disk**

13.2.4.4. Type **Z:\MULTITECH\NT**

13.2.4.5. Left click **OK**

13.2.4.6. Left click **MultiTech Systems MT5600ZDX**

13.2.4.7. Left click **Next**

13.2.4.8. Left click **COM2**. Left click **Next**.

13.2.4.9. In the "What area(city) code …" edit box type **YYY**

Note: YYY = The area code of the city.

Verify radio button "Tone Dialing" is selected. Left click **Next**.

13.2.4.10. Left click **Finish**.

13.2.4.11. Verify modem is **MultiModem MT5600ZDX**. Left click **Next**.

13.2.4.12. Verify **TCP/IP** is selected. Left click **Next**.

13.2.4.13. At the "Please select a port…" choose **COM2**. Left click **Finish**.

13.2.5. Left click the **BE A HOST PC** button.

13.2.6. Right click on the **MODEM** icon and select the **Properties** dialog.

13.2.7. Verify/select **MultiModem 5600ZDX** is selected in the "Connection Info" tab.

13.2.8. Left click "Settings" tab.

13.2.9. Verify/select in "Host Startup" **Run Minimized** is checked.

13.2.10. Verify/select in "Host Startup" **Run as Service** is checked.

13.2.11. Verify/select in "Host Options" **Wait for Anyone** is checked.

13.2.12. Verify/select in both sections, in "Security" **Log off user** is checked.

13.2.13. Left click "Callers" tab.

13.2.14. Left click **Use NT user privileges** radio button.

13.2.15. Left double–click on “Add User” icon and do the following:

13.2.15.1. Verify **“User”** radio button is selected. Left click **Next**.

13.2.15.2. In the “What domain…” select the MUSE file server (Make sure you choose the machine name like **MUSE$$$XXX** and not the domain name like MUSE$$$)

13.2.15.3. In the “Select the account…” select **Administrator** and left click **Next**. Left click **Finish**.

13.2.16. Left click the “Security Options” tab.

13.2.17. In “Connection Options” left click the **Blank this PC screen after connection made**.

13.2.18. Left click **OK** to save the properties settings for the MODEM connection.

13.2.19. Left double–click the **MODEM** icon button to launch the service.

13.3. Switching pcAnywhere Host Service to Automatic

13.3.1. Left click **Start >> Settings >> Control Panel >> Services**.

13.3.2. Highlight the **pcANYWHERE Host Service**.

13.3.3. Left click **Startup** button and set the radio button **AUTOMATIC**.

13.3.4. Left click **OK**.

13.3.5. Verify that the “pcANYWHERE Host Service” has a status of **STARTED** and a startup of **AUTOMATIC**, left click **Close**.

13.3.6. Close “Control Panel” window.

14. NT 4.0 SERVER RESOURCE KIT INSTALLATION

14.1. Make sure that you are logged in as **Administrator**.

14.2. Make sure that the MUSE Software CD is in the CD–ROM drive.

14.3. Left click **Start >> Run**.

14.4. Type **Z:\NTRESKIT\SETUP.EXE** and left click **OK**.

14.5. At the “Do you agree to these terms…” screen left click **Accept**.

14.6. At the “Windows NT Server…” screen, Left click **Continue**.

14.7. At “Name” enter in the hospital's name.

14.8. At “Organization” enter in the hospital's affiliation or the hospital’s name again. Left click **OK.**

14.9. Left click **OK**.

14.10. Accept the destination directory location and left click **OK**. Verify the default directory is **C:\NTRESKIT**.

14.11. Left click **Custom/Complete** and left click **Continue**.

14.12. Left click **OK** to complete setup.

15. ST. BERNARD'S OPEN FILE MANAGER VERSION 5.1 INSTALLATION

15.1. Make sure that you are logged in as **Administrator**.

15.2. Make sure that the MUSE Software CD is in the CD-ROM drive.

15.3. Left click **Start >> Run**.

15.4. Type **Z:\OFM\V51\SETUP.EXE** and left click OK.

15.5. At the “Welcome” screen, left click **Next**.

15.6. At the “Software License Agreement” screen, left click **Yes**.

15.7. At the “User Information” screen type in the following:

Name:	MUSE$$$001
Company:	Hospital Name
Serial:	See OFM package for number

15.8. Left click **Next**.

15.9. At the “Choose Destination Folder” screen, verify default location to be “C:\Program Files\OFM” left click **Next**.

15.10. At the “Select Program Folder” screen, verify default folder to be “Open File Manager” left click **Next**.

15.11. At the “Start Copying Files” screen left click **Next**.

15.12. At the “Setup Complete” screen left click **Finish**.

15.13. At the “Open File Manager” window, left double click “OFM” icon.

15.14. Left click on the “+” sign to the left of the “Microsoft Windows Network” to open.

15.15. Left click on the "+" sign to the left of the Domain in which the File Server is in.

PDC ..... **MUSE$$$**
Member ..... **MUSESIG**

15.16. You should now be able to see the File Server's Computer Name in which you are installing OFM to. Right click on "MUSE$$$001" and left click **Install** from the pop-up menu.

15.17. At the "Install OFM" screen left click "MUSE$$$001" under the "System" section and left click **Install**.

15.18. Left click **Start** and verify the green check mark by the Computer Name.

15.19. Left click **File** >> **Exit** and close all visible windows.

16. BTRIEVE 7.0 INSTALLATION – **5B ONLY**

16.1. Make sure that you are logged in as **Administrator**.

16.2. Make sure that the MUSE Software CD is in the CD–ROM drive.

16.3. Left click **Start** >> **Run**.

16.4. Type **Z:\BTRIEVE\V70_3\SETUP.EXE** and left click **OK**.

16.5. At the "Pervasive.SQL Install Welcome" window, left click **Next**.

16.6. At the "Pervasive.SQL Setup Type" window, left click **Custom**.

16.7. At the "Select Server Engines" window, left click "Scalable SQL" to uncheck the box and verify "Btrieve" to be the only box checked. Left click **Next**.

16.8. At the "Select Client Components Installation Directory" window, verify **C:\PVSW** and left click **Next**.

16.9. At the "Select Components to Install" uncheck all boxes EXCEPT for "Client Programs" and "Btrieve" and left click **Next**.

16.10. At the "Question" window "You selected to not install the ODBC…" left click **NO**.

16.11. At the "Select Pervasive.SQL Software Folder" verify **Pervasive SQL 7** and left click **Next**.

16.12. At the "Select Services Mode" screen verify "Automatic" and left click **Next**.

16.13. Verify settings and left click **Next**.

Note: System will copy files.

16.14. At the “Setup User Count License” screen, insert the appropriate Btrieve floppy into the A: drive and left click **Install License**.

16.15. At the “User Count License” screen, left click **OK**.

16.16. At the “32–bit Btrieve Functionality Check” screen left click **Skip**.

16.17. At the “Question” window, left click **NO**. Remove floppy from the A: drive.

16.18. Left click **Finish** to restart system.

17. BTRIEVE 6.15 INSTALLATION – **5A ONLY**

17.1. Make sure that you are logged in as **Administrator**.

17.2. Make sure that the MUSE Software CD is in the CD–ROM drive.

17.3. Left click **Start >> Run**.

17.4. Type **Z:\BTRIEVE\V615\XX\INSTALL.EXE** and left click **OK**.

Note: XX = the amount of licenses purchased.

17.5. At the “Pervasive Welcome” window left click **Next**.

17.6. At the “Installation Options” window left click **Next**.
Verify that all boxes are checked.

17.7. At the “Choose Destination Location” window left click **Next**.
Verify the default directory is **c:\bti\winnt**.

17.8. At the “Install will copy files…” left click **Yes**.

17.9. At the “Btrieve for Windows NT Service has been installed and is running…” prompt left click **Yes** to stop it now.

17.10. At the “What type of program group...” Left click **Next**.
Verify radio box “Common Program Group…**”** is selected.

17.11. At the “Would you like to view...” left click **No**.

17.12. At the “Install is complete...” screen, left click **OK**. Close window.

18. VISUAL BASIC 4 INSTALLATION **– 5A ONLY**

18.1. Make sure that you are logged in as **Administrator**.

18.2. Make sure that the MUSE Software CD is in the CD–ROM drive.

18.3. Left click **Start >> Run**

18.4. Type **Z:\VISUALB4\SETUP.EXE** and left click **OK**.

18.5. Left click **OK**.

18.6. Verify directory to be **C:\PROJECT1**. Left click button.

18.7. At the "Project1 Setup…" message box, left click **OK**.

19. MUSE MAIL MESSAGING INSTALLATION

Note: Check customer order to see if this is an ordered option. If Yes, install the following. If not, go to next section.

19.1. Install the IIS 4.0 SMTP Server

19.1.1. Make sure that the MUSE Software CD is in the CD–ROM drive.

19.1.2. Left click **Start >> Programs >> Windows NT 4.0 Option Pack >> Windows NT 4.0 Option Pack Setup**.

19.1.3. Left click **Next**.

19.1.4. Left click **Add/Remove**.

19.1.5. Left double–click the "Internet Information Server (IIS)" in the "Components" list.

19.1.6. At the "Internet Information Server (IIS)" screen, left click the "SMTP Service" check box.

19.1.7. Left click **OK**.

19.1.8. Left click **Next**.

19.1.9. Left click **Next** to accept the default mailroot directory.

Note: Setup will now start copying files.

19.1.10. Left click **Finish**.

19.2. Configure the IIS 4.0 SMTP Server

19.2.1. Left click **Start >> Programs >> Windows NT 4.0 Option Pack >> Microsoft Internet Information Server >> Internet Service Manager**.

19.2.2. Left click "show tips on startup" to uncheck and left click **Close**.

19.2.3. In the left window pane, left click the "+" sign to the left of the "Internet Information Server" to open.

19.2.4. Left click the "+" sign to the left of "MUSE$$$XXX" to open.

19.2.5. Right click "Default SMTP Site" to access menu and left click "Properties."

19.2.6. Left click "Messages" tab and type in the following:

Maximum Message Size (kilobytes) **30000**
Maximum Session Size (kilobytes) **30000**

19.2.7. Left click "Delivery" tab and type in the following:

Smart Host ..... **MUSESIG**

19.2.8. Left click "Directory Security" tab.

19.2.9. In the "Relay Restrictions" section, left click **Edit…**

19.2.10. Left click "Allowed to Relay" radio button.

19.2.11. Left click **OK**.

19.2.12. Left click **OK**.

19.2.13. Left click **Console** >> **Exit**.

19.2.14. Left click **Yes** to save console settings.

19.2.15. Left click **Start** >> **Settings** >> **Control Panel** >> **Services**.

19.2.16. Make sure the following is set for the "Microsoft SMTP Service"

Startup ..... **Automatic**
Status ..... **Started**

19.2.17. Left click **Close**.

19.2.18. Close "Control Panel."

19.3. Install EMWAC POP3 Server Software

19.3.1. Left click **Start** >> **Run**.

19.3.2. Type **Z:\POP3\INSTALL.BAT C:\WINNT** and left click **OK**.

19.3.3. At the "Does the MUSE File Server…" prompt, select **Yes/NO**. **<ENTER>**

19.3.4. At the "Registry Editor" prompt, left click **OK**.

20. MUSE SOFTWARE INSTALLATION **– 5A ONLY**

20.1. Install MUSE Application Files.

20.1.1. Make sure that you are logged in as **Administrator**.

20.1.2. Make sure that the MUSE Software CD is in the CD–ROM drive.

20.1.3. Left click **Start** >> **Programs** >> **Command Prompt**.

20.1.4. Type **Z:** **<ENTER>**

20.1.5. Type **CD\MUSE** **<ENTER>**

20.1.6. Type **INSTALL 1** **<ENTER>**

20.1.7. At the "License…" prompt, verify **Yes** and **<ENTER>**

20.1.8. At the "Time Zone Environment Variable", select accordingly.

Note: This will depend on the city you are shipping to.

20.1.9. At the "Add a Start MUSE CV Shortcut to the Desktop" prompt, verify **Yes**. **<ENTER>**

20.1.10. Perform the following based on the File Server:

MEMBER SERVER INSTALL ONLY

Type **CVUSER MuseAdmin** **<ENTER>**
Type **CVUSER MuseBkgnd** **<ENTER>**

20.2. Perform one of the following based on the Sales Order:

CONVERSION INSTALL ONLY
If your system requires a customer database to be placed on the system, notify the appropriate member of conversion to do this. When done, they will call you back to continue with the install.

NO CONVERSION OR NEW SYSTEM INSTALL ONLY
If your system is NEW or DOES NOT need a customer's database installed on it, install the default MUSE Database Files.

Type **CD\MUSEDB** **<ENTER>**
Type **INSTALL 5000** **<ENTER>**
At the "License…" prompt, verify **Yes** and **<ENTER>**

20.3. Perform one of the following based on the File Server:

MEMBER SERVER INSTALL ONLY

Type **cvsinst MUSESIG\MUSEBkgnd Muse!Bkgnd d:\vol000\system\sysinf\services.asc** **<ENTER>**

20.4. **MUSE CV WEB INSTALLATION ONLY**

Note: Check customer order to see if this is an ordered option. If Yes, install the following. If not, go to next section.

20.4.1. Install MUSE CV WEB

20.4.1.1. Type **CD\MUSEWEB <ENTER>**

20.4.1.2. Type **INSTALL Z:\MUSEWEB\ <ENTER>**

20.4.1.3. At the "License…" prompt, verify **Yes**. **<ENTER>**

20.4.2. Install Adobe Acrobat Reader

20.4.2.1. Left click **Start >> Run**.

20.4.2.2. Type **Z:\ADOBE\AR32E301.EXE** and left click **OK**.

20.4.2.3. At the "This will install Adobe Acrobat…" screen, left click **Yes**.

20.4.2.4. At the "Welcome" screen, left click **Next**.

20.4.2.5. At the "License Agreement" screen, left click **Yes**.

20.4.2.6. At the "Destination Directory" screen, left click **Next**.

20.4.2.7. At the "Setup Complete" screen, uncheck the "Display Acrobat Reader 3.01 Readme file" check box, and left click **Finish**.

20.4.2.8. Left click **OK** to the "Setup is complete" message.

20.5. **MUSE WORD DATABASE INSTALLATION ONLY**

Note: Check customer order to see if MUSE CV Word is an ordered option. If Yes, install the following. If not, go to next section.

20.5.1. Type **CD\MUSEWDDB <ENTER>**

20.5.2. Type **INSTALL <ENTER>**

20.6. Install MUSE Update files

20.6.1. Type **CD\MUSEUP <ENTER>**

20.6.2. Type **INSTALL –U <ENTER>**

20.6.3. At the "License…" prompt, verify **Yes**. **<ENTER>**

20.7. Type **EXIT**. **<ENTER>**

20.8. Reboot the system.

21. MUSE SOFTWARE INSTALLATION – **5B ONLY**

21.1. MUSE CV Server and MUSE CV Web Installation

21.1.1. Log in as **Administrator**.

21.1.2. If any Btrieve 7.0 folders are open in the tool bar, close them now.

21.1.3. Left click **Start** >> **Run**

21.1.4. Type **Z:\MUSE32\SETUP.EXE** and left click **OK**.

21.1.5. At the "Welcome" screen, left click **Next**.

21.1.6. At the "Software License Agreement" screen, left click **Yes**.

21.1.7. At the "Select MUSE CV System NODE Type" screen, verify that the "File Server" radio button is selected.

21.1.8. Left click **Next**.

21.1.9. At the "Select MUSE CV…" screen, make sure "MUSE CV Application" check box is selected.

21.1.10. If you are installing MUSE CV Web, left click "MUSE CV Web" check box.
Check customer order to see if this is an ordered option. If Yes, install the MUSE CV Web. If not, do not check, skip this and move on.

21.1.11. Left click **Next**.

21.1.12. At the question screen "Add MUSE CV Desktop icon," verify that the **Yes** radio button is selected and left click **Next**.

Note: System will copy files.

21.1.13. At the "Setup Complete" screen, verify "Yes, I want to restart my computer now" radio button is selected and left click **Finish** to restart the computer.

21.2. Perform the following based on the File Server:

MEMBER SERVER INSTALL ONLY

21.2.1. Make sure that you are logged in as **Administrator**.

21.2.2. Left click **Start** >> **Programs** >> **Command Prompt**.

21.2.3. Type **CVUSER MuseAdmin** **<ENTER>**

21.2.4. Type **CVUSER MuseBkgnd** **<ENTER>**

21.2.5. Type **EXIT**. **<ENTER>**

21.3. Perform one of the following based on the Sales Order:

CONVERSION INSTALL ONLY
If your system requires a customer database to be placed on the system, notify the appropriate member of conversion to do this. When done, they will call you back to continue with the install.

NO CONVERSION OR NEW SYSTEM INSTALL ONLY
If your system is NEW or DOES NOT need a customer's database installed on it, install the default MUSE Database Files.

21.3.1. Make sure that you are logged in as **Administrator**.

21.3.2. Make sure that the MUSE Software CD is in the CD-ROM drive.

21.3.3. Left click **Start** >> **Run**

21.3.4. Type **Z:\MUSEDB\SETUP.EXE** and left click **OK**.

21.3.5. At the "Welcome" screen, left click **Next**.

21.3.6. At the "Software license agreement" screen, left click **Yes**.

Note: System will copy files.

21.3.7. At the "Question" prompt, left click **No** and left click **Next**.

21.3.8. At the "Setup Complete" screen, left click "NO" radio button and left click **Finish**.

21.4. Perform one of the following based on the File Server:

MEMBER SERVER INSTALL ONLY

21.4.1. Left click **Start** >> **Programs** >> **Command Prompt**.

21.4.2. Type **cvsinst MUSESIG\MUSEBkgnd Muse!Bkgnd d:\vol000\system\sysinf\services.asc** **<ENTER>**

21.4.3. Type **EXIT**. **<ENTER>**

21.5. **MUSE CV WEB INSTALLATION ONLY**

Note: Check customer order to see if this is an ordered option. If Yes, install the following. If not, go to next section.

21.5.1. Install Adobe Acrobat Reader

21.5.1.21. Left click **Start** >> **Run**

21.5.1.22. Type **Z:\ADOBE\AR32E301.EXE** and left click **OK**.

21.5.1.23. At the "This will install Adobe Acrobat…" screen, left click **Yes**.

21.5.1.24. At the “Welcome” screen, left click **Next**.

21.5.1.25. At the “License Agreement” screen, left click **Yes**.

21.5.1.26. At the “Destination Directory” screen, Left click **Next**.

21.5.1.27. At the “Setup Complete” screen, uncheck the “Display Acrobat Reader 3.01 Readme file” check box, left click **Finish**.

21.5.1.28. Left click **OK** to the “Setup is complete” message.

21.6. Install MUSE Update Files

21.6.1. Left click **Start** >> **Programs** >> **Command Prompt**
21.6.2. Type **Z: <ENTER>**
21.6.3. Type **CD\MUSEUP <ENTER>**
21.6.4. Type **INSTALL -U <ENTER>**
21.6.5. At the “License…” prompt, verify **Yes**. **<ENTER>**
21.6.6. Type **EXIT <ENTER>**

21.7. Reboot the system.

22. TESTING THE MUSE CV WEB INSTALLATION

Note: Perform this section only if the MUSE CV WEB option has been installed, otherwise go to the next section.

22.1. Log in as the following:

User ..... **MuseAdmin**
Password..... **Muse!Admin**

Domain PDC ..... **MUSE$$$**
Domain Member..... **MUSESIG**

22.2. At the “Welcome” window, left click **Close**.

22.3. Close the “Welcome – Microsoft Internet Explorer” window.

22.4. Make sure that the MUSE Software CD is in the CD–ROM drive.

22.5. Left click **Start** >> **Run**.

22.6. Type **Z:\BAT\ADDTMPUS.BAT** and left click **OK**.

22.7. Verify the commands completed successfully.

22.8. Press any key to close the command prompt window.

22.9. Left click **Start** >> **Shut Down…**

22.10. Select the “Close all programs and…?” radio button.

22.11. Left click **Yes**.

22.12. Log in as the following:

User .....**CVWEBTEST**
Password..... **cvwebtest**

Domain PDC .....**MUSE$$$**
Domain Member.....**MUSE$$$XXX**

22.13. At the "Welcome" window left click **Close**.

22.14. Close the "Welcome – Microsoft Internet Explorer" window.

22.15. Left double–click the "Internet Explorer" icon on the desktop.

22.16. Left click **Next**.

22.17. At the "Setup Options screen", select the "I already have an Internet connection…" radio button, left click **Next**.

22.18. Left click **Finish**.

22.19. Left click **Stop** to abort finding Microsoft Web Site or left click **OK** at the "A connection with the server…" prompt.

22.20. Left click in the Address bar of the Internet Explorer window, type **MUSE$$$XXX**. **<ENTER>**

22.21. In the "Enter Network Password" window, enter the following:

User name.....**CVWEBTEST**
Password..... **cvwebtest**

22.22. Left click **OK**.

22.23. Verify that the "Welcome to the MUSE® CardioVascular Information System Website" homepage is displayed.

22.24. Close the Internet Explorer window.

22.25. Left click **Start >> Shut Down…**

22.26. Select the "Close all programs and…?" radio button.

22.27. Left click **Yes**.

22.28. Log in as **Administrator**.

22.29. Left click **Start >> Run**.

22.30. Type **Z:\BAT\DELTMPUS.BAT** and left click **OK**.

22.31. Verify the commands completed successfully.

22.32. Press any key to close the command prompt window.

22.33. Left click **Start >> Shut Down…**

22.34. Select the "Restart" radio button. System will reboot.

23. SETTING UP MUSE ENVIRONMENT

23.1. Log in as **MuseAdmin**. Password is **Muse!Admin**.

Perform one of the following based on the File Server:

PRIMARY DOMAIN CONTROLLER INSTALL ONLY In the "Domain" pull down box select **MUSE$$$**

MEMBER SERVER INSTALL ONLY In the "Domain" pull down box select **MUSESIG**

23.2. If the "Welcome" window appears, left click **Close**.

23.3. If the "Welcome – Microsoft Internet Explorer" window appears, close it.

23.4. Adding nodes to the server

23.4.1. Left click **Start >> Programs >> Command prompt**

23.4.2. Type **CVUSER MuseXXX**. **<ENTER>**

Note: XXX is number of the node that you want to add.

The corresponding password will be **Muse!XXX**.

Repeat this step for as many users that you will have connecting to the server.

23.4.3. Type **Exit**. **<ENTER>**

23.5. Configuring IMS

23.5.1. Left click **Start >> Run**

23.5.2. Type **DCOMCNFG**. Left click **OK**.

23.5.3. Select **MUSE–CV IMS Cserver**. Left click **Properties**.

23.5.4. Left click the "Security" tab.

23.5.5. Left click the "Use Custom Access Permissions" radio button. Left click **Edit** button.

23.5.6. Left click **Add**.

23.5.6.1. Left click “List Names From” and choose the local domain:
PDC .....**MUSE$$$**
Member .....**\\MUSE$$$XXX***

23.5.6.2. Left double–click **Muse Users** group.

23.5.6.3. Left double–click **System** group.

23.5.6.4. Verify they appear in “Add names” window along with “Type of Access” being **Allow Access**. Left click **OK**. Left click **OK**

23.5.7. Left click the “Use Custom Launch Permissions” radio button. Left click **Edit** button.

23.5.8. Left click **Add**.

23.5.8.1. Left click “List Names From” and choose the local domain:
PDC .....**MUSE$$$**
Member.....**\\MUSE$$$XXX***

23.5.8.2. Left double–click **Muse Users** group.

23.5.8.3. Left double–click **System** group.

23.5.8.4. Verify they appear in “Add names” window along with “Type of Access” being **Allow Launch**. Left click **OK**. Left click **OK**

23.5.9. Left click “Identity” tab.

23.5.10. Left click “This User” radio button.

23.5.11. Perform one of the following based on the File Server:

PRIMARY DOMAIN CONTROLLER INSTALL ONLY
In the “User” edit box type **MUSE$$$\MuseBkgnd**

Note: Where MUSE$$$ = domain name of PDC.

MEMBER SERVER INSTALL ONLY
In the “User” edit box type **MUSESIG\MuseBkgnd**

23.5.12. In the “Password” edit box type **Muse!Bkgnd** and confirm the password.

23.5.13. Left click **OK**.

23.5.14. Left click **OK**.

23.6. Verify that IMS is configured properly.

23.6.1. Insert Cartridge into Tape Backup unit.

23.6.2. Left click **Start** >> **Run**.

23.6.3. Type **CVIS0122**. Left click **OK**.

23.6.4. Verify that the MUSE–IMS window is launched, close window.

23.6.5. Left click **Start** >> **Run**.

23.6.5.1. Type **D:\VOL000\SYSTEM\SYSINF\IMS.INI**. Left click **OK**.

23.6.5.2. Add the following to the section **– 5A ONLY**

[Backup]
LastWeek=
ThisWeek=
UpdateOFM=FALSE

23.6.5.3. Change section to the following:

[AUTORUN]
BACKARC=**FALSE**
INTEGRITY=**FALSE**

23.6.5.4. Save file.

23.6.6. Left click **Start** >> **Run**.

23.6.7. Type **SOON CVIS0122 –AUTORUN**. Left click **OK**.

Note: A window should appear and close down.

23.6.8. Start MUSE.

23.6.8.1. Left click **Start** >> **Programs** >> **MUSE CVIS** >> **Start MUSE CV**.

23.6.8.2. Left click **System** >> **System Status**

23.6.8.3. Left click **Select List** >> **Event Log**

23.6.8.4. Visually check for the following entries

"IMS Started"
"IMS Ended"

23.6.8.5. Exit MUSE application. Left click **System** >> **Exit**.

23.6.9. Left click **Start** >> **Run**.

23.6.10. Type **D:\VOL000\SYSTEM\SYSINF\IMS.INI**. Left click **OK**.

23.6.11. Change section to the following:

[AUTORUN]
BACKARC=**TRUE**
INTEGRITY=**TRUE**

23.6.12. Save file.

23.6.13. Configure nightly Auto Run time

23.6.13.1. Left click **Start >> Run**.

23.6.13.2. Type **CVIS0122**. Left click **OK**.

23.6.13.3. Left click **System >> Set AutoRun Time**.

23.6.13.4. Right click in the white Client area that is launched.

23.6.13.5. Left click **Add**.

23.6.13.6. Type in the command box **CVIS0122 –AUTORUN**

23.6.13.7. Set the days and hours of operation.

23.6.13.7.1. The "Every**"** radio button should be selected.

23.6.13.7.2. Left click on every day of the week.

23.6.13.7.3. Set the time for 3:00 am.

23.6.13.7.4. Left click **OK**.

23.6.13.8. Verify a green check, all days chosen and time set to 3:00am.

23.6.13.9. Close all visible windows.

23.6.14. Installing Options Disk

23.6.14.1. Start MUSE by left double–clicking on icon **Start MUSE CV**

23.6.14.2. Left click **System >> System Setup**.

23.6.14.3. Left click **System >> Install Options**.

23.6.14.4. Copy "Authorization Code" and proceed to MUSE Options station to set up the Options Disk #419719–001.

23.6.14.5. Once completed, insert Options disk into floppy drive and left click **Install**.

23.6.14.6. Verify "Registered Name" and "Installed Options List" data to be correct.

23.6.14.7. Remove floppy.

23.6.14.8. Close MUSE application and restart NT.

23.7. **CATH LAB INSTALLATION ONLY**

Note: Check customer order to see if this is as an ordered option. If Yes, install the following. If not, go to next section.

23.7.1. Cath options must be turned on via the Options disk.

23.7.2. The file "**APPLIST.ASC**" must be edited and the "**!**" in front of **Configure Cath Lists…** must be removed.

23.7.3. The file "**BACKTASK.ASC**" must be edited and the "**;**" in front of **324,\\MUSE$$$XXX** must be removed.

23.8. **MAC–LAB INSTALLATION ONLY**

Note: Check customer order to see if this is as an ordered option. If Yes, install the following. If not, go to next section.

23.8.1. Share Drive for access.

23.8.1.1. Left click **Start >> Run**

23.8.1.2. Type **Z:\MUSEDB\MLABADD.BAT** and left click **OK**.

23.8.2. The file "**APPLIST.ASC**" must be edited and the "**!**" in front of **MAC–LAB Assistant…** must be removed.

23.9. **ACC DATA EXPORT INSTALLATION ONLY**

Note: Check customer order to see if this is as an ordered option. If Yes, install the following. If not, go to next section.

23.9.1. The file "**APPLIST.ASC**" must be edited and the "**!**" in front of **ACC Data Export…** must be removed.

23.10. **INVENTORY MANAGEMENT AND SCHEDULE BOARD INSTALLATION ONLY**

Note: Check customer order to see if this is as an ordered option. If Yes, install the following. If not, go to next section.

23.10.1. Inventory Management option must be turned on via the Options disk.

23.10.2. Schedule Board option must be turned on via the Options disk.

23.10.3. The file "**BACKTASK.ASC**" must be edited and the "**;**" in front of **612,1,1** must be removed. Also, the "1,1" must be changed to the number of the client that will running it.

Note: Only one instance of **612** can be activated on a networked system.

23.11. **TFTP SERVER INSTALLATION ONLY**

Note: Check customer order to see if a Gateway client is to be installed. If Yes, install the following. If not, go to next section.

23.11.1. The file "**BACKTASK.ASC**" must be edited and the line **325,1,1** must be added. Also, the "1,1" must be changed to the number of the client that will running it.

23.11.2. The file "**BACKTASK.ASC**" must be edited and the **340,1,1** must be added. Also, the "1,1" must be changed to the number of the client that will running it.

23.12. Installing the Bar Code font **–5A ONLY**

23.12.1. Logon as **MuseAdmin**.

23.12.2. Left click **Start** >> **Settings** >> **Control Panel** >> **Fonts**.

23.12.3. Left click **File** >> **Install New Font …**

23.12.4. Choose **C:\mei** directory.

23.12.5. Left click **3 of 9 Barcode (TrueType)**.

23.12.6. Left click **OK**.

23.12.7. Close all visible windows.

24. CONFIGURING MUSEADMIN DESKTOP

24.1. Set the screen saver.

24.1.1. Right click on the desktop, left click **Properties**.
24.1.2. Left click the "Screen Saver" tab.
24.1.3. Choose the **Logon Screen Saver** from "Screen Saver" pull down menu.
24.1.4. Left click "Password Protected" check box.
24.1.5. Verify wait is set to **15** minutes.
24.1.6. Left click **OK** to exit.

24.2. Move the "My Briefcase" folder to the Recycle Bin.

24.2.1. Right click on icon **My Briefcase** and select **Delete**.
24.2.2. Left click **Yes** to confirm delete.

24.3. Set the taskbar options

24.3.1. Left click **Start** >> **Settings** >> **Taskbar…**
24.3.2. Verify "Always on top" is selected.
24.3.3. Left click "Show small icons in Start menu."
24.3.4. Verify "Show Clock" is selected.
24.3.5. Left click **OK** to exit.

24.4. Set the Explorer Options

24.4.1. Left double–click “My Computer” icon.
24.4.2. Left click **View** >> **Toolbar**. Toolbar should appear in window.
24.4.3. Left click **View** >> **Options…**
24.4.4. Left click the radio button “Browse folders by using a single window that changes as you open each folder.”
24.4.5. Left click the “View” tab.
24.4.6. Left click the radio button “Show all files.”
24.4.7. Left click the check button “Display the full path in the title bar.”
24.4.8. Un–select “Hide file extensions for known file types.”
24.4.9. Left click the check button “Display compressed files and folders with alternate color.”
24.4.10. Left click **OK**. Close “My Computer” window.

24.5. Set the command prompt options

24.5.1. Left click **Start** >> **Settings** >> **Control Panel** >> **Console**.
24.5.2. Left click the “Options” tab. Default.
24.5.3. Left click “Large” from the “Cursor Size” section.
24.5.4. Left click the “Layout” tab.
24.5.5. Enter **80** for the “Screen Buffer Size Width.” Default.
24.5.6. Enter **50** for the “Screen Buffer Size Height.”
24.5.7. Enter **80** for the “Window Size Width.” Default.
24.5.8. Enter **50** for the “Window Size Height.”
24.5.9. Left click **OK**. Close “Control Panel” window.

****
NOTE: AT THIS POINT, THE INSTALL OF THE MUSE FILE SERVER IS COMPLETE. COMPLETE ANY NECESSARY CLIENT INSTALLATIONS AND THEN START THE OVERALL TESTING USING TP MUSE 5A AT THIS TIME. AFTER SUCCESSFUL COMPLETION OF THE TP, RETURN TO THIS POINT AND COMPLETE THE AP.
****

25. BURN–IN PROCEDURE

No burn–in is necessary. This process is done by Avnet Computers.

26. CLEANUP

Perform one of the following based on the Sales Order:

CONVERSION INSTALL ONLY
Give system to the Conversion team. When they return it back to you, complete the rest of this AP.

NO CONVERSION OR NEW SYSTEM INSTALL ONLY
Continue with this AP.

26.1. Emptying Recycle Bin

26.1.1. Right click on **Recycle Bin** icon.
26.1.2. Select “Empty Recycle Bin”
26.1.3. Left click **Yes**.

26.1.4. Reboot.

26.2. Disk Maintenance

26.2.1. Make sure that you are logged in as **Administrator**.

26.2.2. Left click **Start** >> **Programs** >> **Diskeeper** >> **Diskeeper**.

26.2.3. Close “Welcome” window.

26.2.4. Left click **Defragment** >> **Select Disk**.

26.2.5. Left click C:[NTFS].

26.2.6. Left click **OK**.

26.2.6.1. Process will now start and may take 5–10 minutes.

26.2.6.2. Let click **OK** when done.

26.2.7. Left click **Defragment** >> **Select Disk**.

26.2.8. Left click D:[NTFS].

26.2.9. Left click **OK**.

26.2.9.1. Process will now start and may take 5–10 minutes.

26.2.9.2. Left click **OK** when done.

26.2.10. Left click **Advanced Tools** >> **Boot–Time Defragmentation**.

26.2.11. Left click C:[NTFS]. Left click “**Directory Consolidation**” check box. Left click **Set**. Verify Directory Consolidation Set.

26.2.12. Left click D:[NTFS]. Left click “**Directory Consolidation**” check box. Left click **Set**. Verify Directory Consolidation Set.

26.2.13. Left click **Close**.

26.2.14. At the “Diskeeper” prompt, left click **OK**, left click **OK**.

26.2.15. Close “Diskeeper” window.

26.2.16. Reboot system.

Note: This process will reboot your system a few times. Wait until you get a logon screen before continuing.

27. CREATING AN EMERGENCY REPAIR DISK

27.1. Log in as Administrator.
27.2. Insert a floppy into A: drive
27.3. Select **Start >> Run**
27.4. Type **RDISK /S**. Left click **OK**.
27.5. At the "Setup can create an Emergency Repair disk..." Screen, left click **Yes**.
27.6. At the "Label a floppy disk..." screen, left click **OK**.
27.7. At the "Windows NT repair information contains..." screen, left click **OK**.
27.8. Remove the floppy, date and label it as **MUSE$$$XXX Emergency Repair Disk**
27.9. Restart System.

28. TAPE BACKUP

28.1. Log in as **MUSE ADMIN**

28.2. Left click **Start >> Programs >> MUSE CV Info System >> Integrated Maintenance Suite >> Manual Backup**

28.3. Insert "MONDAY" tape.

28.4. Left click **Normal Daily**. Backup process will start.

28.5. Left click **Start >> Programs >> MUSE CV Info System >> Integrated Maintenance Suite >> Manual Backup**

28.6. Insert "MONTHLY SERVICE" tape.

28.7. Left click **Monthly Backup**. Backup process will start.

Note: Check MUSE error log to verify backups ran correctly.

28.8. CONVERSION INSTALL ONLY

28.8.1. Left click **Start >> Programs >> MUSE CV Info System >> Integrated Maintenance Suite >> Advanced**

28.8.2. Insert "CONVERSION" tape.

28.8.3. 5A INSTALLS: Left click **Backup Archive >> Backup Paths**
5B INSTALLS: Left click **Backup Archive >> Do Manual Backup**

28.8.4. Highlight all volumes.

28.8.5. Left click **OK**. Backup process will start.

Note: If volumes are large enough this process may ask for multiple tapes to be inserted.

28.8.6. Upon completion, give tape to Conversion and let them visually inspect the system.

28.8.7. Multiple Archived Volumes

Note: Complete this section only if there are more then two volumes.

Note: Vol0 and Vol[with the greatest number] should not be selected. They are both active and will be done in the Daily Tape process. Only select the Vol's that are in between these two. They are not active and will not be backed up unless told to do so. Also, for **every additional volume,** you must have **two** extra tapes that must be added to the sales order as separate line items.

For example, if you have the following scenario:

Vol0 → Template Volume – will be backed up in Daily Tape. Do not select.
Vol1 → Archive Volume – You will create two [2] VOLUME 1 tapes and backup.
Vol2 → Archive Volume – You will create two [2] VOLUME 2 tapes and backup.
Vol3 → Active Volume – will be backed up in Daily Tape. Do not select.

28.8.7.1. Left click **Start >> Programs >> MUSE CV Info System >> Integrated Maintenance Suite >> Advanced**

28.8.7.2. Insert VOLUME X tape.

Note: X = the number of the volume.

28.8.7.3. 5A INSTALLS: Left click **Backup Archive >> Backup Paths**
5B INSTALLS: Left click **Backup Archive >> Do Manual Backup**

28.8.7.4. Highlight the appropriate VolX.

28.8.7.5. Left click **OK**. Backup process will start.

28.8.7.6. Upon completion, remove tape, put in the second tape and repeat section. If there are more volumes to backup, like in the example, repeat this section. For every volume there should be two identical backup tapes that will be **sent** to the customer.

29. REMOVE TEMPORARY USERS

FOR MEMBER SERVER INSTALL ONLY

29.1. Log in as **Administrator**. In the "Domain" pull down box select **MUSE$$$XXX**

29.2. Left click **Start >> Programs >> Administrative Tools >> User Manager for Domains**.

29.3. Left double–click "MUSE Users" in bottom window.

29.3.1. Select all users and left click **Remove**.

29.3.2. Left click **OK**.

29.4. Left double–click “Administrators” in bottom window.

29.4.1. Select all users, except for Administrator, and left click Remove.

29.4.2. Left click **OK**.

29.5. Left double–click “Users” in bottom window.

29.5.1. Select all users, except the Administrator, and left click Remove.

29.5.2. Left click **OK**.

29.6. Left click **Policies** >> **User Rights**.

29.6.1. Left click check box “Show Advanced Users Rights”

29.6.2. Pull down “Right” menu, select **Log on as a Batch Job**.

29.6.3. Select “MUSE Background” user and left click **Remove**.

29.6.4. Pull down “Right” menu, select **Log on as a Service**.

29.6.5. Select all users and left click **Remove**.

29.6.6. Left click **OK**.

29.7. Close “User Manager” window.

30. SET SCREEN RESOLUTION

30.1. Left click **Start** >> **Settings** >> **Control Panel** >> **Display**.

30.2. Left click “Settings” tab.

30.3. Change the “Desktop Area” to be set at **640 by 480**.

30.4. Left click **OK.**

30.5. At the “Display Settings” prompt, left click **OK**.

30.6. Display should be noticeably larger. Close Control Panel.

30.7. Left click **Start** >> **Shutdown**.

30.8. Verify “Shutdown the computer?” radio button is selected.

30.9. Left click **Yes**.

30.10. At the “Shutdown Computer” prompt, power down File Server.

31. CONFIGURING THE COMPAQ UPS

Note: Perform the following ONLY IF the UPS option is included with the system and then check (RAID Voltage Options located on Pre–build) to see if the UPS should be configured for **100**v, **220**v, or **240**v and perform the following.

If the UPS is domestic **120**v and does not need to be reconfigured for **100**v, **220**v, or **240**v, then skip this section.

31.1. Perform one of the following based on the (RAID Voltage Options):

CAUTION: DO NOT press the **OFF** button while the UPS is in configuration mode. Doing so places the unit in Standby mode and disconnects the load.

100 VAC UPS CONFIGURATION ONLY – JAPAN

Press the **ON** and **Test/Alarm Reset** buttons at the same time for one beep – see Figure 1–1. (The UPS is now in Configuration mode)

Press the **ON** button until the 100/208v function LED is selected – see Appendix Figure 1–1. (The UPS beeps as you scroll through each function LED and the selected function LED blinks.)

Press the **Test/Alarm Reset** button to turn the 100/208v function on. (The Function Status LED turns on when the function is on and off when the function is off.)

Press the **ON** and **Test/Alarm Reset** buttons at the same time to return to Operation mode. (Changes take effect immediately after returning to Operation mode.)

220 VAC UPS CONFIGURATION ONLY – FOREIGN

Press the **ON** and **Test/Alarm Reset** buttons at the same time for one beep – see Figure 1–1. (The UPS is now in Configuration mode)

Press the **ON** button until the 110/220v function LED is selected – see Appendix Figure 1–1. (The UPS beeps as you scroll through each function LED and the selected function LED blinks.)

Press the **Test/Alarm Reset** button to turn the 110/220v function on. (The Function Status LED turns on when the function is on and off when the function is off.)

Press the **ON** and **Test/Alarm Reset** buttons at the same time to return to Operation mode. (Changes take effect immediately after returning to Operation mode.)

240 VAC UPS CONFIGURATION ONLY – FOREIGN
Press the **ON** and **Test/Alarm Reset** buttons at the same time for one beep – see Figure 1–1. (The UPS is now in Configuration mode)
Press the **ON** button until the 127/240v function LED is selected – see Appendix Figure 1–1. (The UPS beeps as you scroll through each function LED and the selected function LED blinks.)
Press the **Test/Alarm Reset** button to turn the 127/240v function on. (The Function Status LED turns on when the function is on and off when the function is off.)
Press the **ON** and **Test/Alarm Reset** buttons at the same time to return to Operation mode. (Changes take effect immediately after returning to Operation mode.)

****
NOTE: AT THIS POINT, YOU ARE READY TO SHIP THE SYSTEM. REFERENCE TP MUSE 5A FOR PROPER SHIPPING INSTRUCTIONS.
****

32. APPENDIX

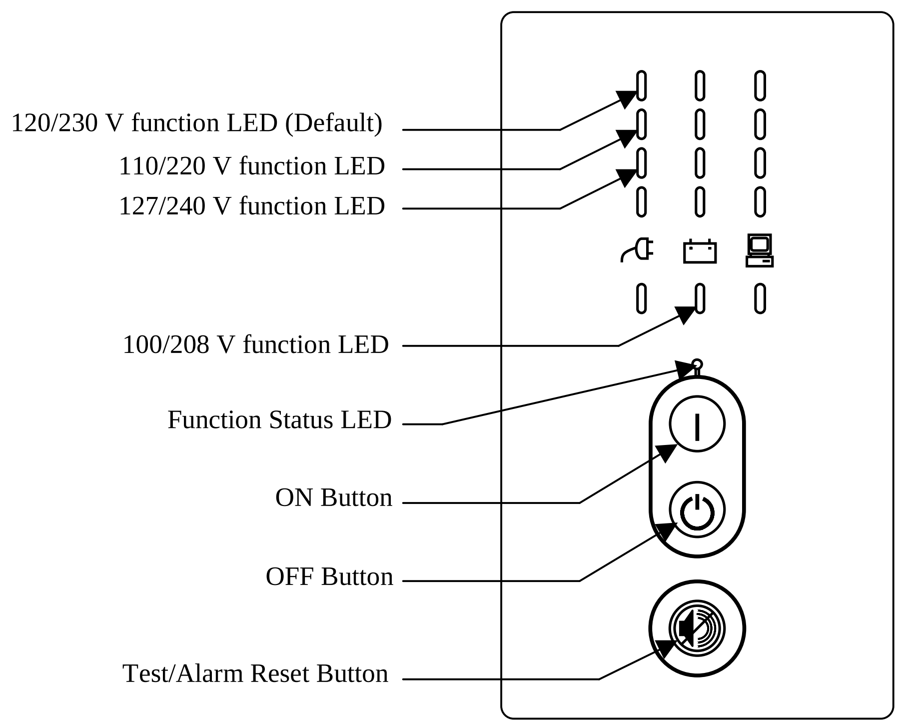

Figure 1-1. UPS Button and LED Function in Configure Mode

marquette
A GE Medical Systems Company

AP 901070-W95
REV G

assembly procedure

title: **MUSE WORKSTATION WITH WINDOWS 95**

revision section

rev	effective date	section changed	reason for change
A	18 Mar 1998	RELEASE	
B	31 Mar 1998	8.10, 8.11, 17.....	Removed sections 8.10, 8.11; added 17.1—8 to account for writer board and sound conflicts.
C	22 Jun 1998	ALL	Added functionality for MUSE 5A.06, Year 2000, TFTP, MUSE Word and Cath Lab installs.
D	31 Aug 1998	13, 22.....	Removed section 13; added section to state that no burn-in time is necessary.
E	30 Mar 1999	7, 14.....	Added Note to handle confusion over BIOS upgrades. Added installation of MUSE mail messaging.
F	29 Jul 1999	8.10, 8.11, 9.8, 17.3.....	Added sections to disable power management; fixed for all versions; fixed broken path.
G	25 Aug 1999	ALL	Changes made to facilitate new imaging process.

approval section for revision #	G	page 1 of 19	
revision author:	Leon Milbeck	date:	8/18/99
design engineering:	Bob Mich	date:	08/25/1999
manufacturing engineering:	Craig R. Weiss	date:	08/24/1999

originator: Leon Milbeck **date:** 06 March 1998

MUSE WORKSTATION WITH WINDOWS 95

Table Of Contents

SECTION	TITLE	PAGE
1.	PURPOSE	3
2.	SCOPE	3
3.	RELATED DOCUMENTS	3
4.	EQUIPMENT REQUIRED	3
5.	SPECIAL CONDITIONS	3
6.	PROCEDURE	3
7.	BIOS SETTINGS FOR ALL ROCKAWAY COMPUTERS	4
8.	IMAGECAST PROCEDURE	4
9.	SETTING NETWORK ENVIRONMENT.	4
10.	INSTALL SHIELD APPLICATION	6
11.	SETTING UP LOCAL PRINTING	7
12.	MICROSOFT WORD 6.0 INSTALLATION	8
13.	MUSE MAIL MESSAGING CLIENT INSTALLATION	9
14.	MUSE SOFTWARE INSTALLATION **– 5A ONLY**	11
15.	MUSE SOFTWARE INSTALLATION **– 5B ONLY**	12
16.	CLEANUP	13
17.	GE MMS WRITER BOARD VS SOUND INSTALL ONLY	13
18.	PCI COMMUNICATION DEVICE [DIGI BOARD] INSTALL ONLY	13
19.	SMC PCI ETHERNET NIC CARD	14
20.	MUSE CV WORD INSTALLATION	15
21.	CATH INSTALLATION	17
22.	TFTP INSTALLATION	19
23.	BURN-IN PROCEDURE	19

1. PURPOSE

This procedure is intended as a guideline for the assembly of the following MUSE products:

MUSE Workstation 901070-001

Based on what is called out on the customer order and the new OMAR structure, a technician will be able to reference this document in order to create a system with Windows 95 as its operating system.

2. SCOPE

This document applies to the GE-Marquette Medical Systems– Milwaukee manufacturing facility.

3. RELATED DOCUMENTS

3.1. MUSE Network Series Manual
3.2. QS1004 ..... Product Burn-In Guidelines
3.3. QS1003 ..... Quality Assurance Device History Record Guidelines
3.4. TP-MUSE 5A ..... MUSE 5A Test Procedure

4. EQUIPMENT REQUIRED

All equipment is "OR EQUIVALENT"

4.1. Complete MUSE Client Customer Order
4.2. MUSE QA Calibrated Test ECG(s) Diskettes MT-3561
4.3. Three SIGLAB 230VAC power cables (for 230VAC systems only)
4.4. MUSE Software CD 5A 420858-001
4.5. MUSE Software CD 5B 422436-001
4.6. MUSE MFG Tooling CD S1402
4.7. Boot Disk S1407
4.8. MUSE File Server Configurator S1408

5. SPECIAL CONDITIONS

The following test procedure will apply to both 115 VAC 50-60Hz systems as well as 230 VAC 50Hz systems.

6. PROCEDURE

6.1. Assembly of Vendor Equipment

6.2. Initial Set-up of Vendor Equipment

6.2.1. 100/115 VAC 50-60Hz Systems

Assemblies (115VAC 50-60Hz) - connect power cord supplied with computer and monitor to standard 115VAC 60Hz outlet.

6.2.2. 230 VAC 50Hz Systems

Assemblies (230VAC 50Hz) - connect SIGLAB 230VAC power cable to power connector on back of computer, monitor, and printer, then to 230VAC 50Hz power source.

6.2.3. Connect monitor signal cable to the video connector on back of computer.

6.2.4. Connect MICROSOFT Mouse (403590-199) into Mouse Connector port on back of computer.

6.2.5. If you are building a system with a Cybex KVM 2/4 port switch, connect all keyboard, mouse and monitor ports from the Client into the necessary slots on the switch.

7. BIOS SETTINGS FOR ALL ROCKAWAY COMPUTERS

7.1. Boot system.
7.2. **<F2>** to enter setup utility.
7.3. At the Bios Setup Utility Screen. **<F9>**
7.4. "Load default configuration now" **Yes <ENTER>**
7.5. **<F10>** "Save configuration changes and exit now!"
7.6. Verify **Yes <ENTER>**
7.7. System will now restart. **<F2>** to enter setup utility.
7.8. Set the appropriate "System Time" and "System Date."
7.9. Go to "Advanced Screen" tab and set the "Plug & Play O/S" to **<NO>**
7.10. Go to "Power" tab.
7.11. Set "Power Management" to **DISABLED**
7.12. **<F10>** "Save configuration changes and exit now!"
7.13. Verify **Yes <ENTER>**
7.14. System will now restart.

8. IMAGECAST PROCEDURE

8.1. Insert Boot Floppy S1407 into floppy drive and power up.

8.2. Insert Tooling CD S1402 into CD-ROM drive.

8.3. At the "Press any key to continue…" prompt, **<ENTER>** and then select **Client <ENTER>** and then select **Win 95 <ENTER>**

8.4. At the blue "ImageCast IC3 Client…" screen, once the system starts copying data, remove the floppy.

8.5. System will take approximately 1-2 minutes to complete the process. It will then reboot. Remove the MUSE MFG Tooling CD.

9. SETTING NETWORK ENVIRONMENT.

9.1. If the "Microsoft Network" prompt appears, left click **Cancel**.

9.2. If the "Enter Network Password" prompt appears, left click **Cancel**.

Note: The network settings will be fixed in this section.

9.3. Left click **Start >> Programs >> MS-DOS Prompt**.

9.4. Type **DEL C:\WINDOWS\MUSE042.PWL <ENTER>**

9.5. Type **Exit <ENTER>**

9.6. Left click **Start** >> **Settings** >> **Control Panel** >> **Network**

9.7. Perform one of the following based on the File Server:

PRIMARY DOMAIN CONTROLLER INSTALL

9.7.1. Left click "TCP\IP".
9.7.2. Left click **Properties**.
9.7.3. Left click the radio button "Specify and IP address."
9.7.4. Type in the "IP Address" of the node.
128.9.9.node_id
9.7.5. Type in the "Subnet Mask" of the node.
255.255.0.0
9.7.6. Left click "DNS Configuration" tab.
9.7.7. Left click radio button "Enable DNS".
9.7.8. Type **MUSE$$$XXX** in the "Host"

Note: Where **MUSE$$$XXX** = Client Machine Name

9.7.9. Left click **OK**.

MEMBER SERVER INSTALL

Continue on…

9.8. Left click "Identification" tab.

9.9. Type **MUSE$$$XXX** for "Computer Name".

Note: MUSE$$$XXX → Name of Client node machine.

Acquisition Station.....5-14
Gateway Station 22-36
MUSE Workstation.....42-123

9.10. Perform one of the following based on the File Server:

PRIMARY DOMAIN CONTROLLER INSTALL

Type **MUSE$$$** for "Workgroup".

MEMBER SERVER INSTALL

Type **MUSESIG** for "Workgroup".

9.11. Type **MUSE$$$ WIN95 (MUSE NodeXXX)** for "Computer Description".

9.12. Left click "Configuration" tab.

9.13. Left click "Client for Microsoft Networks " icon and left click **Properties**.

9.14. Perform one of the following based on the File Server:

PRIMARY DOMAIN CONTROLLER INSTALL Type **MUSE$$$** in the “Windows NT domain” edit field. **Note**: MUSE$$$ = Hospital’s domain.

MEMBER SERVER INSTALL Type **MUSESIG** in the “Windows NT domain” edit field.

9.15. Left click **OK**.

9.16. Left click **OK**.

9.17. Left click **Yes** to restart the computer.

9.18. At the “Enter Windows Password” window, type in the following:

User Name:..... **MuseXXX**

9.19. Left click **OK**.

9.20. Left click **OK**.

9.21. At the “Enter Network Password” window, verify **MUSEXXX** is in the “User Name” field.

9.22. Type **Muse!XXX** in the “Password” edit field.

9.23. Perform one of the following based on the File Server:

PRIMARY DOMAIN CONTROLLER INSTALL Verify **MUSE$$$** is in the “Domain” field.

MEMBER SERVER INSTALL Verify **MUSESIG** is in the “Domain” field.

9.24. Verify that the “Save this password…” check box is checked.

9.25. Left click **OK**.

10. INSTALL SHIELD APPLICATION

10.1. Insert Tool Disk S1408.

10.2. Left click **Start >> Run**

10.3. Type **A:\SETUP.EXE**. Left click **OK**.

10.4. At the “Welcome” screen, left click **Next**.

10.5. Type in the appropriate data in the following edit fields:

Name .....**Hospital Name**
Organization:.....**Hospital Organization**
Serial: ..... **XXXXX-OEM-XXXXXXX-XXXXX**

10.6. Left click **Next**.

10.7. Verify "Yes, I want to restart…" radio button is selected.

10.8. Remove floppy.

10.9. Left click **Finish**. System will now restart.

11. SETTING UP LOCAL PRINTING

Note: The following conditions must be met before continuing on:
A printer configured and attached to the LPT port on the computer.

11.1. Make sure that the MUSE Software CD is in the CD-ROM drive.

11.2. Left click **Start** >> **Settings** >> **Printers**.

11.3. Left double click icon **Add Printer**.

11.4. At the "Add Printer Wizard" screen, left click **Next**.

11.5. Left click the radio button "Local Printer" and left click **Next**.

11.6. Left click **Have Disk**.

11.7. Type **Z:\HPPRINT\WIN95** left click **OK**.

11.8. Left click **HP LaserJet 4000 Series PS** in the "Printers" section.

11.9. Left click **Next**.

11.10. From the "Available Ports" section, left click the port that the printer is attached to.

11.11. Left click **Next**.

11.12. Verify "Printer Name" to be **HP LaserJet 4000 Series PS** in the edit field. Left click **Next**.

Note: This may change if customer so desires based on Pre-Build Survey.

11.13. Verify radio button "Yes (recommended)" is selected. Left click **Finish**.

11.14. Files will be copied to your system.

11.15. If the "Copying files…" prompt for the HP Laser Jet 4000 appears, left click **Cancel**. At the "HP Laser Jet 4000 Series PCL 6…" prompt, left click **OK**.

Note: This may only happen if you have a printer connected to the LPT port.

11.16. At the “HP Laserjet…” prompt, left click **Yes** if the page printed correctly. If not, reinstall the printer.

11.17. Right click “HP LaserJet 4000 Series PS” Icon.

11.18. Left click **Sharing**

11.19. Left click radio button “Shared As:”

11.20. Type in “Shared Name”; edit field a unique name.

Note: For one (1) printer, use **LJ4K01**. If more than one (1), increase number. Reference Pre-Build Survey for correct name.

11.21. Left click **OK**.

11.22. Close “Printers” window.

12. MICROSOFT WORD 6.0 INSTALLATION

Note: Check customer order to see if MUSE CV Word is an ordered option. If Yes, install the following. If not, go to next section.

12.1. Make sure that the MUSE Software CD is in the CD-ROM drive.

12.2. Left click **Start >> Run**

12.3. Type **Z:\WORD60C\SETUP.EXE** Left click **OK**.

12.4. At the “Microsoft Word 6.0c Setup” window, left click **OK**.

12.5. At the “Name and Organization Information” window type **NodeXXX** in the “Name” field. Type **Customer Name** in the “Organization” field. Left click **OK**.

12.6. Left click **OK** to verify the information.

12.7. Left click **OK** at the “Microsoft Product ID number” window.

12.8. Verify “C:\WINWORD” is the install directory, left click **OK**.

12.9. Left click **Complete/Custom** button.

12.10. Left click **Continue**.

12.11. At the “Help for WordPerfect users” window, left click **NO**.

12.12. At the “Choose Program Group” window verify **Microsoft Office** and left click **Continue**. Software will begin installing.

12.13. At the “Successful Completion” window, left click **OK**.

12.14. Start Word by left double clicking the **Microsoft Word** icon.

12.15. When the “Tip of the Day” window appears, left click **OK**.

12.16. Left click **Tools >> Options**.

12.17. Left click “Save” tab.

12.18. Deselect the following checkboxes:

Allow Fast Saves
Automatic Save Every ___ Minutes

12.19. Left click **OK** to close the Options window and save your choices.

12.20. Left click **View >> Ruler** to turn rulers off.

12.21. Close Word. Close all visible windows.

12.22. Restart system.

13. MUSE MAIL MESSAGING CLIENT INSTALLATION

Note: Check customer order to see if this is an ordered option. If Yes, install the following. If not, goto next section.

13.1. Left click **Start >> Settings >> Control Panel**.

13.2. Left double-click **Add/Remove Programs**.

13.3. Left click “Windows Setup” tab.

13.4. Left double-click “Windows Messaging” selection.

13.5. Make sure that the following options are as follows:

“Internet Mail Services” check box is checked.
“Microsoft Mail Services” check box is unchecked.
“Windows Messaging” check box is checked.

13.6. Left click **OK**.

13.7. Left click **OK** at the “Add/Remove Programs” screen.

Note: Files will be copied.

13.8. Left double-click the “Inbox” icon on the Windows 95 desktop.

13.9. At the “Inbox Setup Wizard” screen, select the “Use the following information services” radio button and make sure the only entry, in the list which is checked, is the “Internet Mail” option. Left click **Next**.

13.10. At the “TCP/IP is required…” dialog, left click **OK**.

13.11. At the “Click the method used to connect...” screen, choose “Network” and left click **Next**.

13.12. At the “Specify either an IP Address or a name...” screen, fill in the following field:

Specify the Name .....**MUSE$$$XXX**
MUSE$$$XXX = MUSE File Server you are attaching to.

13.13. Left click **Next**.

13.14. At the “Click the mode for transferring messages...” screen, choose “Automatic” and left click **Next**.

13.15. At the “Type in the E-Mail address for your mail account...” screen, enter the following:

E-Mail Address.....**MUSE.CV.Mail@MUSE.org**
Your Full Name.....**MUSE CV Mail**

13.16. Left click **Next**.

13.17. At the “Type in your mailbox account name and password...” screen, enter the following:

Mailbox Name.....**MuseXXX**
Password.....**Muse!XXX**
MuseXXX = node where E-Mail Client is being installed

13.18. Left click **Next**.

13.19. At the “Personal Address Book” screen, accept the default value. Left click **Next**.

13.20. At the Personal Folders dialog” screen, accept the default value. Left click **Next**.

13.21. Left click **Finish**.

13.22. Close the E-Mail client.

13.23. Left double-click the “Mail” icon located in the Control Panel Applet.

13.24. On the “Services” tab window, left click **Show Profiles**.

13.25. On the “General” tab window of the Mail dialog, in the box showing the profiles setup on the computer, there should only be one profile present. Select the “Windows Messaging Settings” profile and left click **Copy**.

13.26. In the “Copy Profile” dialog, type **MUSE CV Messaging** in the “New Profile Name” field and left click **OK**.

Note: There should now be two profiles listed.

13.27. Select the original profile, “Windows Messaging Settings,” and left click **Remove**. Left click **Yes** to remove the original profile.

13.28. In the Mail dialog, on the “General” tab window, make sure the profile selected for the “When starting Windows Messaging, use this profile” field is showing the **MUSE CV Messaging** profile as the current profile.

13.29. Left click **Close**.

13.30. Close Control Panel.

14. MUSE SOFTWARE INSTALLATION **– 5A ONLY**

14.1. Make sure that the MUSE Software CD is in the CD-ROM drive.

14.2. Install MUSE Application Files.

14.2.1. Left click **Start** >> **Programs** >> **MS-DOS Prompt**.
14.2.2. Type **COMMAND /E:1024 <ENTER>**
14.2.3. Type **Z: <ENTER>**
14.2.4. Type **CD\MUSE <ENTER>**
14.2.5. Type **INSTALL XX <ENTER>**

Note: Where XX = node_id.

14.2.5.1. At the "License…" prompt, verify **Yes <ENTER>**

14.2.5.2. At the "Time Zone Environment Variable", select accordingly **<ENTER>**

Note: This will depend on the city you are shipping to.

14.2.5.3. At the "Is this a Turnkey Workstation" prompt, verify **Yes <ENTER>**

14.2.5.4. At the "Use MUSE Authentication" prompt, verify **Yes <ENTER>**

14.2.5.5. At the "MEI writer board installed" select **Yes/No <ENTER>**

14.3. Install MUSE Update Files

14.3.1. Type **CD\MUSEUP <ENTER>**
14.3.2. Type **INSTALL - U <ENTER>**
14.3.3. At the "License…" prompt, verify **Yes <ENTER>**

14.4. Change location of server in WIN.INI.

14.4.1. Type **EDIT C:\WINDOWS\WIN.INI <ENTER>**
14.4.2. In the following section, change the values to reflect:

	[MUSE]
Initial State:	MainServerName=\\MUSE$$$001
Final State:	MainServerName=**MUSE$$$XXX**

Note: MUSE$$$XXX = File server you are attaching to.

14.4.3. Save file and close Edit window.
14.4.4. Type **EXIT <ENTER>**
14.4.5. Type **EXIT <ENTER>**

14.5. Restart system.

15. MUSE SOFTWARE INSTALLATION **– 5B ONLY**

15.1. Make sure that the MUSE Software CD is in the CD-ROM drive.

15.2. Left click **Start >> Run**

15.3. Type **Z:\MUSE32\SETUP.EXE** and left click **OK**.

15.4. At the "Welcome" screen, left click **Next**.

15.5. At the "Software License Agreement" screen, left click **Yes**.

15.6. At the "Select MUSE CV System NODE Type" screen, left click the appropriate radio button for the type of system you are installing.

Acquisition **5-14**
Unity Gateway..... **22-36**
Workstation **42-115**

15.7. Left click **Next**.

15.8. At the "Select MUSE CV…" screen, make sure "MUSE CV Application" radio button is selected.

15.9. If you are installing MUSE Word, verify the "MUSE CV Word" check box is checked.
Check customer order to see if this is an ordered option. If Yes, install the MUSE CV Word. If not, do not check, skip this and move on.

15.10. Left click **Next**.

15.11. At the "MUSE node number selection" screen, type in the appropriate node id in the field, left click **Next**.

15.12. At the "Enter MUSE CV File Server Name" screen, type in the name of the file server you are attaching to in the field, left click **Next**.

Note: Make sure that it is in the form **\\MUSE$$$XXX**

15.13. If the question screen "Is this a turnkey workstation" appears, left click **Yes** radio button and left click **Next**.

15.14. If the question screen "Use MUSE Authentication" appears, left click **Yes** radio button and left click **Next**.

15.15. At the question screen "Is there a MUSE writer board installed," left click **Yes** or **NO** radio button based on the sales order, left click **Next**.

Note: System will copy files.

15.16. At the "Setup Complete" screen, verify "Yes, I want to restart my computer now" radio button is selected and left click **Finish** to restart the computer.

16. CLEANUP

16.1. Emptying Recycle Bin

16.1.1. Exit MUSE application if running.
16.1.2. Right click on **Recycle Bin** icon.
16.1.3. Select “Empty Recycle Bin”
16.1.4. Left click **Yes**.

17. GE MMS WRITER BOARD VS SOUND INSTALL ONLY

Note: If you are installing a system that requires a GE MMS writer board to be installed, you must disable the sound at the BIOS level.

17.1. Boot system.
17.2. **<F2>** to enter setup utility.
17.3. Go to “Advanced Screen” tab.
17.4. Enter “Peripheral Configuration”
17.5. Set “Audio” to **DISABLED**
17.6. **<F10>** "Save configuration changes and exit now!"
17.7. Verify **Yes <ENTER>**
17.8. System will now restart.

18. PCI COMMUNICATION DEVICE [DIGI BOARD] INSTALL ONLY

Note: The following condition must be met before continuing on with this section:
A Digi-Board installed correctly in the system.

18.1. Exit MUSE application if running.

18.2. Right click **My Computer** icon select **Properties**.

18.3. Left click “Device Manager” tab.

18.4. Left double click **Other Devices**.

18.5. Left click **PCI Communication Device**.

18.6. Left click **Remove**. Left click **OK** at “Confirm device removal” window.

18.7. Left click **Test** at “PCI Communication Device…” window.

18.8. Left click **Close**.

18.9. Restart the system.

18.10. At the “Update Device Driver Wizard” screen, the system detected the “PCI Communication Device” left click **Next**.

18.11. Wait until the **Other Locations…** button is visible. Left click it.

18.12. Type **Z:\DIGI\V100\WIN95** Left click **OK**.

18.13. Left click **Finish**.

18.14. Left click **OK** at the “Insert Disk” prompt.

18.15. Type **Z:\DIGI\V100\WIN95** Left click **OK**.

18.16. Verify **DigiAcelePort 4r920Pci** in the "Controller Configuration" window.

18.17. Verify all ports are active and that they have COM 3 – 6 set.

18.18. Left click **OK**. Wait while WIN95 sets ports.

18.19. This completes the Digi Board install for Windows 95.

19. SMC PCI ETHERNET NIC CARD

Note: The following condition must be met before continuing on with this section:

A SMC NIC card installed correctly in the system.

19.1. Exit MUSE application if running.

19.2. Right click **My Computer** icon select **Properties**.

19.3. Left click "Device Manager" tab.

19.4. Left double click **Other Devices**.

19.5. Left click **PCI Ethernet Controller**.

19.6. Left click **Remove**.

19.7. Left click **OK**.

19.8. Left click **Close**. System will now restart.

19.9. At the "Update Device Driver Wizard" screen, the system detected the "PCI Communication Device" left click **Next**.

19.10. Wait until the **Other Locations…** button is visible. Left click it.

19.11. Type **Z:\SMCPCI** Left click **OK**.

19.12. Left click **Finish**.

19.13. Left click **OK** at the "Insert Disk" prompt.

19.14. Type **Z:\SMCPCI** Left click **OK**.

19.15. If prompted with the window "Windows 95 CD-ROM" left click **OK** and type **C:\WIN95** in the edit field. Left click **OK**.

19.16. At the "DHCP Client…" prompt, left click **NO**.

19.17. Right click on the icon **Network Neighborhood**. Left click **Properties**.

19.18. If applicable, left click all "NetBEUI" instances and **Remove**.

19.19. Left click "TCP/IP→Smc9432…" left click **Properties**.

19.20. Left click the radio button "Specify and IP address.

19.21. Type in the "IP Address" of the node.

126.8.8.1

19.22. Type in the "Subnet Mask" of the node.

255.0.0.0

19.23. Left click **OK**.

19.24. Left click **OK**.

19.25. Left click **Yes** to restart system.

19.26. This completes the SMC NIC card install for Windows 95.

20. MUSE CV WORD INSTALLATION

Note: The following conditions must be met before continuing on with this section:

MUSE CV Word Database installed on the File Server – 5A ONLY
A printer (or printer driver) installed on each client:
If no printer is attached, complete one of the following:
1. **Install a shared printer via the Network [If one is available].**
   See "Setting up Network Printing" section that follows.
2. **Install a "virtual" one. [If no printers are available].**
   See "Setting up Virtual Printing" section that follows.

Note: The following conditions must be completed.
Microsoft Word 6.0c installed locally on each client.
MUSE CV Word application installed on each client – 5A ONLY

20.1. Setting up Network Printing

Note: The following conditions must be met before continuing on:
A printer configured on the File Server and attached to the network.

20.1.1. Exit MUSE application if running.

20.1.2. Make sure that the MUSE Software CD is in the CD-ROM drive.

20.1.3. Left click **Start** >> **Settings** >> **Printers**.

20.1.4. Left double click icon **Add Printer**.

20.1.5. At the "Add Printer Wizard" screen, left click **Next**.

20.1.6. Left click the radio button "Network Printer" and left click **Next**.

20.1.7. Left click **Browse**.

20.1.8. From the "Browse for Printer" window, find the name of the File Server from which the printer is shared from. Left click the "+" at the left of the name. This will show you any printers that may be attached.

Note: If no printer is seen, then you have chosen the wrong File Server or the printer is not set up properly.

20.1.9. Left click the printer icon. Left click **OK**.

20.1.10. Verify the “Network Path” field has the printer UNC name filled in. Verify the radio button is set to “NO” for MS-DOS-based programs.

20.1.11. Left click **Next**.

20.1.12. Left click **Have Disk**.

20.1.13. Type **Z:\HPPRINT\WIN95** left click **OK**

20.1.14. Left click **HP LaserJet 4000 Series PS** in the “Printers” section.

20.1.15. Left click **Next**.

20.1.16. Verify “Printer Name” to be **HP LaserJet 4000 Series PS** in the edit field. Left click **Next**.

20.1.17. Verify radio button “Yes (recommended)” is selected. Left click **Finish**.

20.1.18. Files will be copied to your system.

20.1.19. At the “HP Laserjet…” prompt, left click **Yes** if the page printed correctly. If not, reinstall the printer.

20.1.20. Close “Printers” window.

20.2. Setting up Virtual Printing

Note: The following conditions must be met before continuing on:
No printers called out on Sales Order.

20.2.1. Make sure that the MUSE Software CD is in the CD-ROM drive.

20.2.2. Left click **Start** >> **Settings** >> **Printers**.

20.2.3. Left double click icon **Add Printer**.

20.2.4. At the “Add Printer Wizard” screen, left click **Next**.

20.2.5. Left click the radio button “Local Printer” and left click **Next**.

20.2.6. Left click **Have Disk**.

20.2.7. Type **Z:\HPPRINT\WIN95** left click **OK**.

20.2.8. Left click **HP LaserJet 4000 Series PS** in the “Printers” section.

20.2.9. Left click **Next**.

20.2.10. From the “Available Ports” section, left click **LPT1** printer.

20.2.11. Left click **Next**.

20.2.12. Verify “Printer Name” to be **HP LaserJet 4000 Series PS** in the edit field. Left click **Next**.

20.2.13. At the “Print a test page…” window, set the radio button to “NO”. Left click **Finish**.

20.2.14. Files will be copied to your system.

20.2.15. Close “Printers” window.

20.3. MUSE CV Word Installation **– 5A ONLY**

20.3.1. Exit MUSE application if running.

20.3.2. Left click **Start** >> **Run**

20.3.3. Type **Z:\MUSEWORD\SETUP.EXE** left click **OK**.

20.3.4. Left click **Next**. Software will begin installing.

20.3.5. Left click **OK** at the “Setup is complete” prompt. The Notepad application will be open.

20.3.6. Close Notepad.

20.3.7. Restart the system.

21. CATH INSTALLATION

Note: The following conditions must be met before continuing on with this section:

On the MUSE File Server:
Cath Options must be turned on via the Options Disk.
The file “APPLIST.ASC” must be edited and the “!” in front of Configure Cath Lists… must be removed.
The file “BACKTASK.ASC” must be edited and the “;” in front of 324,\\MUSE$$$XXX must be removed.

21.1. MAC-LAB Installation

Note: The following conditions must be met before continuing on with this section:

On the MUSE File Server:
The directory, D:\VOL000\TMP\MLAB, must be shared as the “H-Drive.”
The file “APPLIST.ASC” must be edited and the “!” in front of MAC-LAB Assistant… must be removed.

21.1.1. Adding MAC-LAB to the start-up group.

21.1.1.1. Exit MUSE application if running.

21.1.1.2. Right click on the **Start** button on the tool bar.

21.1.1.3. Left click **Open** button.

21.1.1.4. Left double click **Programs** icon.

21.1.1.5. Left double click **StartUp** icon.

21.1.1.6. Left click **File** >> **New** >> **Shortcut**.

21.1.1.7. Type in **C:\MEI\MLABASST**.

21.1.1.8. Left click **Next**.

21.1.1.9. In the "Select name for shortcut" field, type **MAC-LAB Assistant**.

21.1.1.10. Left click **Finish**.

21.1.1.11. Verify "Start MUSE CV" and "MAC-LAB…" icons in window.

21.1.1.12. Close all windows.

21.1.1.13. Restart system.

21.2. Inventory Management and Schedule Board Installation

Note: The following conditions must be met before continuing on with this section:

On the MUSE File Server:

If Inventory, then Option must be turned on via the Options Disk.
If Schedule, then Option must be turned on via the Options Disk.
The file "BACKTASK.ASC" must be edited and the ";" in front of 612,1,1; must be removed. Also, the "1,1" must be changed to the number of the client node that will be running it.

Note: Only one instance of **612** can be activated on a networked system.

Examples:
Therefore, if you were to install Inventory Management or Schedule Board on Node 42 then the line would be **612,42,42;**

21.2.1. Boot system.

21.2.2. Left click **System** >> **Inventory Management** and verify that application launches.

21.2.3. Left click **System** >> **Schedule Board** and verify that application launches.

22. TFTP INSTALLATION

Note: The following conditions must be met before continuing on with this section:
Install on a Gateway system.

22.1. On the MUSE File Server:

The file “BACKTASK.ASC” must be edited and the line **325,1,1**; must be added. Also, the “1,1” must be changed to the number of all client nodes that will be running it.

The file “BACKTASK.ASC” must be edited and the line **340,1,1**; must be added. Also, the “1,1” must be changed to the number of all client nodes that will be running it.

22.2. Restart WIN95 system, and verify application started in toolbar.

23. BURN-IN PROCEDURE

No burn in is necessary with MUSE systems.

marquette
A GE Medical Systems Company

AP 901070-WFW
REV G

assembly procedure

title: **MUSE WORKSTATION WITH WFW 3.1.1**

revision section

rev	effective date	section changed	reason for change
A	18 Mar 1998	RELEASE	
B	06 Apr 1998	12.3.1.1.....	Removed connection with file server in a note.
C	22 Jun 1998	11.54.4; 11.55.1—5.....	Removed section; added Year 2000 Patch to be installed.
D	11 Aug 1998	13, 14.1.....	Changed section and eliminated burn-in time. Added two sub-sections to test modem after Hi-Pot Test.
E	30 Mar 1999	ALL	Changed all sections for 5B software addition.
F	29 Jul 1999	8.12, 8.13, 11.55.1.....	Added sections; Disabled power management, fixed broken path.
G	25 Aug 1999	ALL	Changes made to facilitate new imaging process

approval section for revision #	G	Page 1 of 7	
revision author:	Leon Milbeck	date	8/18/99
design engineering:	Bob Mich	date	08/25/1999
manufacturing engineering:	Craig R Weiss	date	08/24/1999

originator: Leon Milbeck **date:** 06 March 1998

MUSE WORKSTATION WITH WFW 3.1.1

Table of Contents

SECTION	TITLE	PAGE
1.	PURPOSE	3
2.	SCOPE	3
3.	RELATED DOCUMENTS	3
4.	EQUIPMENT REQUIRED	3
5.	SPECIAL CONDITIONS	3
6.	PROCEDURE	3
7.	BIOS SETTINGS FOR ALL ROCKAWAY COMPUTERS	4
8.	IMAGECAST PROCEDURE	4
9.	NETWORK AND SYSTEM TWEAKS	5
10.	MUSE SOFTWARE INSTALLATION	6
11.	BURN-IN PROCEDURE	7
12.	SAFETY CHECKS	7

1. PURPOSE

This procedure is intended as a guideline for the assembly of the following MUSE products:

MUSE Workstation 901070-001

Based on what is called out on the customer order and the new OMAR structure, a technician will be able to reference this document in order to create a system with Windows for Workgroups as its operating system. The main peripheral that defines this system is the Synchronous Modem Module (SMM) that will be configured via a MUSE File Server.

2. SCOPE

This document applies to the GE-Marquette Medical Systems– Milwaukee manufacturing facility.

3. RELATED DOCUMENTS

3.1. MUSE Network Series Manual
3.2. QS1004 ..... Product Burn-In Guidelines
3.3. TP 800116-00X ..... Muse Network Modem Test Procedure
3.4. MS-2035 ..... Daily Check of Hi-Pot (Dielectric Withstand Testers)
3.5. QS1003 ..... Quality Assurance Device History Record Guidelines
3.6. TP MUSE 5A ..... MUSE 5A Test Procedure

4. EQUIPMENT REQUIRED

All equipment is "OR EQUIVALENT"

4.1. Complete MUSE SDLC Work Station Customer Order
4.2. TOS8650 HI-POT Tester or Equivalent
4.3. Three SIGLAB 230VAC power cables (for 230VAC systems only) ..... MT-2433 MT-2537 or MT-2538
4.4. MUSE Software CD 5A 420858-001
4.5. MUSE Software CD 5B 422436-001
4.6. MUSE MFG Tooling CD S1402
4.7. Boot Disk S1407

5. SPECIAL CONDITIONS

The following test procedure will apply to both 115 VAC 50-60Hz systems as well as 230 VAC 50Hz systems.

6. PROCEDURE

6.1. Assembly of Vendor Equipment

6.2. Initial Set-up of Vendor Equipment

6.2.1. 100/115 VAC 50-60Hz Systems
Assemblies (115VAC 50-60Hz) - connect power cord supplied with computer and monitor to standard 115VAC 60Hz outlet.

6.2.2. 230 VAC 50Hz Systems

Assemblies (230VAC 50Hz) - connect SIGLAB 230VAC power cable to power connector on back of computer, monitor, and printer, then to 230VAC 50Hz power source.

6.2.3. Connect copy protect adapter to system Parallel I/F connector on back of computer. 404216-002 is for all MUSE nodes.

6.2.4. Connect monitor signal cable to the video connector on back of computer.

6.2.5. Connect MICROSOFT Mouse (403590-199) into Mouse Connector port on back of computer.

6.2.6. If you are building a system with a KVM 4 port switch, connect all keyboard, mouse and monitor ports from the Client into the necessary slots on the switch.

7. BIOS SETTINGS FOR ALL ROCKAWAY COMPUTERS

7.1. Boot system.
7.2. **<F2>** to enter setup utility.
7.3. At the Bios Setup Utility Screen. **<F9>**
7.4. "Load default configuration now" Verify **Yes <ENTER>**
7.5. **<F10>** "Save configuration changes and exit now!"
7.6. Verify **Yes <ENTER>**
7.7. System will now reboot. **<F2>** to enter setup utility.
7.8. Set the appropriate “System Time” and “System Date.”
7.9. Go to “Advanced Screen” tab and set the “Plug & Play O/S” to **<NO>**
7.10. Enter “Peripheral Configuration”
7.11. Set “Audio” to **DISABLED**
7.12. Go to “Power” tab.
7.13. Set “Power Management” to **DISABLED**.
7.14. **<F10>** "Save configuration changes and exit now!"
7.15. Verify **Yes <ENTER>**
7.16. System will reboot.

8. IMAGECAST PROCEDURE

8.1. Insert Tooling Floppy S1407 into floppy drive and power up.

8.2. Insert Tooling CD S1402 into CD-ROM drive.

8.3. At the “Press any key to continue…” prompt, **<ENTER>** and then select **Client <ENTER>** and then select **WFW 3.11 <ENTER>**

8.4. At the blue “ImageCast IC3 Client…” screen, once the system starts copying data, remove the floppy.

8.5. System will take approximately 7-10 seconds to complete the process. It will then reboot. Remove the MUSE MFG Tooling CD.

9. NETWORK AND SYSTEM TWEAKS

9.1. At the DOS prompt type **WIN** **<ENTER>**

9.2. Left double click **Network** icon.

9.3. Left double click **Network Setup** icon.

9.4. Left double click **Microsoft TCP/IP-32 3.11a**

9.5. **PRIMARY DOMAIN CONTROLLER INSTALL**

Edit IP and Gateway information appropriately

MEMBER SERVER INSTALL

Left click "Enable Automatic DHCP Configuration" box.
At the "Microsoft TCP/IP" prompt, left click **Yes**.

9.6. Left click **OK**.

9.7. Left click **OK**.

9.8. If applicable, at the "Windows Setup" prompt, left click **OK**.

9.9. If applicable, left click **Continue**.

9.10. Close "Network" window.

9.11. Left double click **Main** icon.

9.12. Left double click **Control Panel** icon.

9.13. Left double click **Network** icon.

9.14. Verify or type in the following

Computer Name = **MUSE$$$XXX**

Workgroup = **MUSE$$$** [If Primary Domain]
Workgroup = **MUSESIG** [If Member Server]

Comment = **MUSE$$$ WFW (NODEXXX)**
Default Logon Name = **MUSEXXX**

Note: XXX = Node ID. MUSE$$$ = Domain Name of PDC.

9.15. Left click **Startup** button.

9.16. Left click the "Log on to Windows NT…" checkbox.

9.17. **PRIMARY DOMAIN CONTROLLER INSTALL**
Type **MUSE$$$**

MEMBER SERVER INSTALL
Type **MUSESIG**

9.18. Left click "Don't display Message…" checkbox.

9.19. Left click **OK**.

9.20. Left click **OK**.

9.21. Left click **Restart Computer**.

10. MUSE SOFTWARE INSTALLATION

10.1. Install MUSE Application Files.

10.1.1. Make sure that the MUSE Software CD is in the CD-ROM drive.
10.1.2. Type **COMMAND /E:1024 <ENTER>**
10.1.3. **Z: <ENTER>**
10.1.4. Complete the following based on Version

5A ONLY – Type **CD\MUSE <ENTER>**

5B ONLY – Type **CD\MUSE16 <ENTER>**

10.1.5. Type **INSTALL XX <ENTER>**

Note: XX = node_id of computer.

10.1.5.1. At the "License…" prompt, verify **Yes** and **<ENTER>**

10.1.5.2. At the "Time Zone Environment Variable", select accordingly. **Note**: This will depend on the city you are shipping to.

10.1.5.3. At the "Is this a Turnkey Workstation" prompt, verify **Yes <ENTER>**

10.1.5.4. Select how many SDLC Modems are installed. **<ENTER>**

10.2. Install MUSE Update Files

10.2.1. Type **CD\MUSEUP <ENTER>**

10.2.2. Type **INSTALL <ENTER>**

10.2.3. At the "License…" prompt, verify **Yes** and **<ENTER>**

10.3. Change location of server in WIN.INI.

10.3.1. Type **EDIT C:\WINDOWS\WIN.INI <ENTER>**

10.3.1.1. In the following section, change the values to reflect:

[MUSE]
Initial State: MainServerName=\\Muse$$$001
Final State: MainServerName=**Muse$$$XXX**

Note: Muse$$$XXX = File server you are attaching to.

10.3.2. Save file.

10.4. Reboot.

10.5. At the "Domain Logon" prompt, type in **Muse!XXX** for the password.

Note: Password is case sensitive.

10.6. Left click **OK**.

10.7. Setup is complete. Remember to activate this Client and it's hardware on the MUSE Server.

11. BURN-IN PROCEDURE

No burn-in is necessary with MUSE systems.

12. SAFETY CHECKS

12.1. MMS SDLC modem

12.1.1. Connect MT2433 to Top 4 modem connectors (phone jacks) one at a time and the other end to the negative lead on the HI-POT tester. The positive lead should remain connected to ground of the MT-2537 or MT-2538 (depending on voltage configuration).

12.1.2. After testing each SDLC/Fax modem with the HI-POT, re-test by sending data through the modem as per TP MUSE 5A to verify that modem was not damaged.

marquette

AP 901070-HIS
REV H

assembly procedure

title: **HIS TEST BOX**

revision section

rev	effective date	section changed	reason for change
A	11 May 1998	RELEASE	
B	22 Jun 1998	9.1.2.6; 9.5; 12.2.14; 16.4;..... 21	Added missing computer name; added year 2000 fix for NT; added missing computer name; added NEWT install; added option for HIS install; added section for installation of SMC PCI NIC Card.
C	11 Aug 1998	14, 15.8, 12.2.14.2, 19.8, 21.....	Removed section 14 due to inability to work. Changed server # from 001 to124; eliminated burn-in time.
D	24 Sep 1998	15.4.....	Removed Section…will now be installed by customer.
E	02 Nov 1998	All.....	Rewritten to facilitate new process of “blasting” hard drives from a pre-configured cloned hard drive.
F	09 Dec 1998	9.....	Added pcAnywhere installation section to be done by technicians to handle Domestic vs. International installs.
G	21 Dec 1998	8.24 through 8.35,..... 13.2.9 through 13.2.13	Removed sections…performed in Section 9. Changed section to handle new version 4.0 of Diskeeper install process.
H	25 Aug 1999	ALL	Changes made to facilitate new imaging process

approval section for revision #	H	Page 1 of 10	
revision author:	Leon Milbeck	date	8/18/99
design engineering:	Bob Mich	date	08/25/1999
manufacturing engineering:	Craig R. Weiss	date	08/24/1999

originator: Leon Milbeck **date:** 30 April 1998

HIS TEST BOX

Table of Contents

SECTION	TITLE	PAGE
1.	PURPOSE	3
2.	SCOPE	3
3.	RELATED DOCUMENTS	3
4.	EQUIPMENT REQUIRED	3
5.	SPECIAL CONDITIONS	3
6.	PROCEDURE	3
7.	BIOS SETTINGS FOR ALL ROCKAWAY COMPUTERS	4
8.	IMAGECAST PROCEDURE	4
9.	CUSTOMIZING NT 40 FOR USE	5
10.	PCANYWHERE32 8.0 ADJUSTMENT	6
11.	SETTING UP MUSE ENVIRONMENT	7
12.	INSTALLING LOCAL PRINTER SUPPORT	7
13.	SMC PCI ETHERNET NIC CARD	8
14.	CLEANUP	9
15.	CREATING AN EMERGENCY REPAIR DISK	10
16.	BURN-IN PROCEDURE	10

1. PURPOSE

This procedure is intended as a guideline for the assembly of the following MUSE products:

HIS Test Box 901070-001

Based on what is called out on the customer order and the new OMAR structure, a technician will be able to reference this document in order to create a system with Windows NT40 as its operating system.

2. SCOPE

This document applies to the GE-Marquette Medical Systems (GE MMS) – Milwaukee manufacturing operation.

3. RELATED DOCUMENTS

3.1. MUSE Network Series Manual
3.2. QS1004 ..... Product Burn-In Guidelines
3.3. QS1003 ..... Quality Assurance Device History Record Guidelines

4. EQUIPMENT REQUIRED

All equipment is "OR EQUIVALENT"

4.1. Complete HIS Test Box Customer Order
4.2. Three SIGLAB 230VAC power cables (for 230VAC systems only)
4.3. MUSE 5A Software CD 420858-001
4.4. MUSE 5B Software CD 422436-001
4.5. MUSE MFG Tool CD S1403
4.6. Boot Disk S1407
4.7. MUSE File Server Configurator S1408

5. SPECIAL CONDITIONS

The following test procedure will apply to both 115 VAC 50-60Hz systems as well as 230 VAC 50Hz systems.

6. PROCEDURE

6.1. Assembly of Vendor Equipment

6.2. Initial Set-up of Vendor Equipment

6.2.1. 100/115 VAC 50-60Hz Systems

Assemblies (115VAC 50-60Hz) - connect power cord supplied with computer and monitor to standard 115VAC 60Hz outlet.

6.2.2. 230 VAC 50Hz Systems

Assemblies (230VAC 50Hz) - connect SIGLAB 230VAC power cable to power connector on back of computer, monitor, and printer, then to 230VAC 50Hz power source.

6.2.3. Connect monitor signal cable to the video connector on back of computer.

6.2.4. Connect MICROSOFT Mouse into Mouse Connector port on back of computer.

7. BIOS SETTINGS FOR ALL ROCKAWAY COMPUTERS

7.1. Boot system.
7.2. **<F2>** to enter setup utility.
7.3. At the Bios Setup Utility Screen. **<F9>**
7.4. "Load default configuration now" **Yes <ENTER>**
7.5. **<F10>** "Save configuration changes and exit now!"
7.6. Verify **Yes <ENTER>**
7.7. System will now reboot. **<F2>** to enter setup utility.
7.8. Set the appropriate “System Time” and “System Date.”
7.9. Go to “Advanced Screen” tab and set the “Plug & Play O/S” to **<NO>**
7.10. Go to “Boot” tab and set the “Boot Device Priority” to the following:

Removable Devices
ATAPI CD-ROM Drive
Hard Drive
Network Boot
LANDesk ® Service A

7.11. **<F10>** "Save configuration changes and exit now!"
7.12. Verify **Yes <ENTER>**
7.13. System will reboot.

8. IMAGECAST PROCEDURE

8.1. Insert Boot Floppy S1407 into floppy drive and power up.

8.2. Insert Tooling CD S1403 into CD-ROM drive.

8.3. At the “Press any key to continue…” prompt, **<ENTER>** and then select **Client <ENTER>** and then select **HIS <ENTER>** and then select **5A** or **5B <ENTER>**

8.4. At the blue “ImageCast IC3 Client…” screen, once the system starts copying data, remove the floppy.

8.5. System will take approximately 5-6 minutes to complete the process. It will then reboot. Remove the MUSE MFG Tooling CD.

9. CUSTOMIZING NT 40 FOR USE

9.1. Log in as **Administrator**. Password is **Never!Mind**.

9.2. Left click **Start** >> **Settings** >> **Control Panel** >> **Date/Time**.

9.3. Set the correct date, time and Time Zone information based on the sales order.

9.4. Left click **OK**.

9.5. Close "Control Panel" window.

9.6. Insert Tool Disk S1408

9.7. Left click **Start** >> **Run**

9.8. Type **A:\SETUP.EXE**. Left click **OK**.

9.9. At the "Welcome" screen, left click **Next**.

9.10. At the "Type of File Server" screen, left click the **HIS5A** or **HIS5B** radio button.

9.11. Left click **Next**.

9.12. At the "User Information" screen, fill in the following edit fields:

Name: .....**Hospital's Name**
Company: .....**Hospital's Organization**
Serial: .....**XXXXXOEMXXXXXXXXXXXX**

9.13. Left click **Next**.

9.14. At the "Adjust Area Code" screen, fill in the following edit fields:

Area Code..... **XXX**

9.15. Left click **Next**.

9.16. Left click the appropriate "Time Zone" radio button.

9.17. Left click **Next**.

9.18. Verify "Yes, I want to restart…" radio button is selected.

9.19. Remove floppy.

9.20. Left click **Finish**. System will now restart.

9.21. Log in as **Administrator**. Password is **Never!Mind**.

9.22. Make sure that the MUSE Software CD is in the CD-ROM drive.

9.23. Left click **Start** >> **Programs** >> **Command Prompt**.

9.24. Type **Z:** **<ENTER>**

9.25. Type **CD\MUSEUP** **<ENTER>**

9.26. Type **INSTALL -U** **<ENTER>**

9.27. At the "License…" prompt, verify **Yes** and **<ENTER>**

Note: System will now copy files.

9.28. At the DOS prompt type **EXIT** **<ENTER>**

9.29. Left click **Start >> Shutdown**.

9.30. Left click "Restart the computer…" radio button and left click **Yes**. System will now restart.

10. PCANYWHERE32 8.0 ADJUSTMENT

10.1. Log in as **MuseAdmin**. Password is **Muse!Admin**.

10.2. Left click **Start >> Programs >> pcAnywhere32 >> pcAnywhere**

10.3. Left click **BE A HOST PC**

10.4. Right click on **MODEM** icon and left click **Properties**.

10.5. Left click "Callers" tab.

10.6. Verify "Use NT user privileges**"** radio button is selected.

10.7. Left double Click on "Add User" icon.

10.8. Verify "User" radio button is selected. Left click **Next**.

10.9. In the "What domain…" pull down, select **MUSEHIS124**.

10.10. In the "Select the account…" pull down select **Administrator**.

10.11. Left click **Next**.

10.12. Left click **Finish**.

10.13. Left click **OK**.

10.14. Left click **Exit**.

10.15. Left click **Start >> Settings >> Control Panel >> Modems**

10.16. Left click **Properties**.

10.17. Left click "Connection" tab.

10.18. Left click **Advanced…**

10.19. Type in the “Extra Settings” edit box **ATM0**.

10.20. Left click **OK**.

10.21. Left click **OK**.

10.22. Left click **Close**.

10.23. Close “Control Panel” window.

11. SETTING UP MUSE ENVIRONMENT

11.1. Installing Options Disk

11.1.1. Start MUSE by left double clicking on icon **Start MUSE CV**

11.1.2. Left click **System >> System Setup**.

11.1.3. Left click **System >> Install Options**.

11.1.4. Copy “Authorization Code” and proceed to MUSE Options station to set up the Options Disk #419719-001.

11.1.5. Once completed, insert Options disk into floppy drive and left click **Install**.

11.1.6. Verify “Registered Name” and “Installed Options List” data to be correct.

11.1.7. Remove floppy.

11.1.8. Close MUSE application and restart NT.

12. INSTALLING LOCAL PRINTER SUPPORT

Note: The following condition must be met before continuing on with this section:

A printer configured and attached to the LPT port on the server.
Check customer order to see if it is called out as an option.

12.1. Log in as **Administrator**. Password is **Never!Mind**.

12.2. Left click **Start >> Settings >> Printers**

12.3. Left double click icon **Add Printer**.

12.4. At the “Add Printer Wizard” screen, verify the radio button “My Computer” is selected. Left click **Next**.

12.5. From the “Available Ports” section, left click the radio button that the printer is attached to.

12.6. Left click **Next**.

12.7. Left click **Have Disk**.

12.8. Type **Z:\HPPRINT\NT** and left click **OK**.

12.9. Left click **HP LaserJet 4000 Series PS** in the "Printers" section.

12.10. Left click **Next**.

12.11. In the "Printer Name" section, type a unique name for the printer.

Note: Default name should suffice unless otherwise stated by Pre-Build Survey.

12.12. Left click **Next**.

12.13. Left click the radio button "Shared" and type in the edit a unique name.

Note: For one (1) printer, use **LJ4K01**. If more, increase number. Default name should suffice unless otherwise stated by Pre-Build Survey.

12.14. Left click **Next**.

12.15. Verify the radio button **Yes** is selected and left click **Finish** to print a test page.

12.16. If the page printed successfully, left click **Yes**. If not left click **NO** and follow the instructions to troubleshoot the problem.

12.17. Close the "Printers" window.

13. SMC PCI ETHERNET NIC CARD

Note: The following condition must be met before continuing on with this section:
A SMC NIC card installed correctly in the system.
Check customer order to see if it is called out as an option.

13.1. Make sure that you are logged in as **Administrator**.

13.2. Make sure that the MUSE Software CD is in the CD-ROM drive.

13.3. Right click on the icon **Network Neighborhood**. Left click **Properties**.

13.4. Left click "Adapters" tab

13.5. Left click **Add**

13.6. Left click **Have Disk**.

13.7. Type **Z:\SMCPCI** left click **OK**

13.8. Verify "SMC9432TX Ether Pro… and left click **OK**. System will copy files.

13.9. At the “Data Rate” pull down, verify “Auto Negotiate” and left click **OK**.

13.10. Left click **Close**.

13.11. Left click “Adapter” pull down and select “(2) SMC9432TX Ether Pro…

13.12. Type in the “IP Address” of the node: **126.8.8.1**

13.13. Type in the “Subnet Mask” of the node: **255.0.0.0**

13.14. Left click **OK**

13.15. Left click **Yes** to restart the system.

****

Note: At this point, the install of the MUSE HIS Test Box is complete. You can now start the overall testing using TP MUSE 5A at this time. After successful completion of the TP, return to this point and complete the AP.

****

14. CLEANUP

14.1. Make sure that you are logged in as **Administrator**.

14.2. Emptying Recycle Bin.

14.2.1. Right click on **Recycle Bin** icon.

14.2.2. Select “Empty Recycle Bin”

14.2.3. Left click **Yes**.

14.3. Disk Maintenance.

14.3.1. Left click **Start** >> **Programs** >> **Diskeeper** >> **Diskeeper**.

14.3.2. Close “Welcome” window.

14.3.3. Left click **Defragment** >> **Select Disk**.

14.3.4. Left click C:[NTFS].

14.3.5. Left click **OK**.

14.3.5.1. Process will now start and may take 5-10 minutes.

14.3.5.2. Let click **OK** when done.

14.3.6. Left click **Defragment** >> **Select Disk**.

14.3.7. Left click D:[NTFS].

14.3.8. Left click **OK**.

14.3.8.1. Process will now start and may take 5-10 minutes.

14.3.8.2. Left click **OK** when done.

15. CREATING AN EMERGENCY REPAIR DISK

15.1. Make sure that you are logged in as **Administrator**.

15.2. Insert a floppy into A: drive

15.3. Left click **Start >> Run**

15.4. Type **RDISK /S**. Left click **OK**.

15.5. At the “Setup can create an Emergency Repair disk...” Screen, left click **Yes**.

15.6. At the “Label a floppy disk...” screen, left click **OK**.

15.7. At the “Windows NT repair information contains...” screen, left click **OK**.

15.8. Remove the floppy, date and label it as **MUSE$$$124 Emergency Repair Disk**

15.9. Shut down system.

16. BURN-IN PROCEDURE

No burn-in is required with MUSE systems.

marquette
A GE Medical Systems Company

TP 419040-001
REV F

test procedure

title: **BUFFER/SERVER WORKSTATION**

revision section

rev	effective date	section changed	reason for change
E	20 Oct 1998	3.0, 6.5.3	Added tool # references and chart for Token Ring systems
F	01 Jul 1999	ALL	Rewrote to reference procedures and processes utilized in Milwaukee manufacturing facility.

	F	page 1 of 16	
revision author:	Daniel Simonson	date	06/29/1999
design engineering:	Camille Parrott	date	07/01/1999
manufacturing engineering:	Daniel Simonson	date	07/01/1999

originator: Camille Parrott **date:** February 12, 1997

BUFFER/SERVER WORKSTATION

Table of Contents

SECTION	TITLE	PAGE
1.	PURPOSE	3
2.	SCOPE	3
3.	RELATED DOCUMENTS	3
4.	EQUIPMENT REQUIRED	3
5.	SPECIAL CONDITIONS/REQUIREMENTS	3
6.	TEST PROCEDURE	4
7.	CUSTOMER CONFIGURATION	14
8.	POST-TEST INSTRUCTIONS	15
9.	APPENDIX A	16

1. PURPOSE

The purpose of this document is to define the procedure used to perform the testing of the GE-MMS P/N: 900666-001 (Buffer Server Ethernet).

2. SCOPE

This test procedure is intended for use by the GE-Marquette Medical Systems, Milwaukee manufacturing facility.

3. RELATED DOCUMENTS

3.1 MacLab System EX Pre-Installation Survey.....PREINSTALL-003
3.2 ESD Protection Guidelines..... MS2014
3.3 Burn-In Guidelines..... MS2116
3.4 Product Serialization Guidelines.....QS1002
3.5 QA Device History Record Guidelines.....QS1003

4. EQUIPMENT REQUIRED

All equipment is "OR EQUIVALENT"

4.1 MacLab EX Board Fixture..... tool # 100014-001/002
4.2 Windows NT Server.....MT-5257
4.3 Novell Netware Server.....MT-5253
4.4 Ethernet Hub.....3Com Hub 8/TPC
4.5 Token Ring Concentrator..... Thomas Conrad 1000TC3
4.6 MS-DOS 6.22 (shipped with system)
4.7 Ethernet/WFW CD ETH TCP/IP MT-5249
4.8 Ethernet/Novell CD ETH NV400 .....MT-5250
4.9 Buffer Server Load Diskette.....MT-5247

5. SPECIAL CONDITIONS/REQUIREMENTS

5.1 This assembly contains static sensitive devices. Proper grounding procedures of the operator MUST be observed when handling this assembly. Refer to MS2014 (ESD Protection Guidelines) for further information.

5.2 For ease of reference in this document, required keyboard/mouse responses are highlighted in **bold** lettering. Screen prompts are shown in "quotations".

5.3 Failure of any test or portion of test shall cause the rejection of the UUT. After rework, the entire test procedure shall be performed.

5.4 All tests shall be performed in the order specified, unless specifically instructed otherwise within the procedure.

6. TEST PROCEDURE

6.1 Setup

6.1.1 Remove the computer system from the packaging.

6.1.2 Connect the monitor, mouse, and keyboard to the rear of the computer.

6.1.3 Connect a twisted-pair Ethernet cable between the unit-under-test (UUT) Intel network card in slot 3 (bottom slot) and the Ethernet Hub. Refer to MacLab Test Network drawing in Appendix A as necessary.

6.2 Drive Partitioning / Op Sys Installation

NOTE: This section cleans up the hard-drive for software installation. It needs to be performed ONLY IF the Buffer Server under test is being reconfigured for a different protocol or software is being reinstalled.

6.2.1 Insert the MS-DOS (version 6.22) Disk 1 – Setup diskette into the floppy drive on the UUT.

6.2.2 Apply power to the UUT, or press the “reset” button.. The system will begin booting from the floppy drive, and is complete when the “Microsoft MS-DOS 6.22 Setup” screen appears.

6.2.3 Press **F3** to exit the setup utility, and **F3** to exit the configuration menu screen.

6.2.4 At the “A:\>” prompt, type **FDISK <Enter>**. The Fixed Disk Setup Program will begin.

6.2.5 Press **3 <Enter>** (Delete partition or Logical DOS Drive).

6.2.6 Press **1 <Enter>** (Delete Primary DOS Partition).

6.2.7 A “WARNING! Data in the deleted Primary DOS partition will be lost. What primary partition do you want to delete … ?” message will appear.

Press **1 <Enter>**

6.2.8 An “Enter Volume Label … ?” question will appear. Enter the volume name that appears on the screen (default is MS-DOS_6).

6.2.9 An “Are you sure (Y/N) … ?” question is displayed. Press **Y <Enter>**.

6.2.10 A “Primary DOS Partition deleted” message will appear. Press **ESC** to return to the “FDISK Options” menu.

6.2.11 Press **1 <Enter>** (Create DOS Partition or Logical DOS Dirve).

6.2.12 Press **1 <Enter>** (Create Primary DOS Partition).

6.2.13 After a few seconds, a “Do you wish to use the maximum available size for the Primary DOS Partition and make the partition active (Y/N)” message will be displayed.

Press **Y <Enter>**

6.2.14 After a short delay, a “System will now restart” message will appear.

6.2.15 Make sure the MS-DOS (version 6.22) Disk 1 – Setup diskette is installed in the floppy drive.

Press ANYKEY on the keyboard to restart the computer.

6.2.16 The system will reboot, and is complete when the “Microsoft MS-DOS 6.22 Setup” screen is displayed.

Press **<Enter>** to continue the DOS Setup program.

6.2.17 Using the keyboard arrow keys, highlight “Continue Setup and replace your current version of DOS” menu option.

Press **<Enter>** to continue.

6.2.18 Using the arrow keys, highlight the “Format this drive (recommended)” menu option.

Press **<Enter>** when complete.

6.2.19 The drive formatting process will begin. Formatting progress will be displayed in an information box.

6.2.20 Upon completion of the formatting, a “Microsoft MS-DOS 6.22 Setup” screen will appear, displaying the system setting options.

6.2.21 Verify the settings, and follow the on-screen directions to change as necessary.

6.2.22 Highlight the “The settings are correct.” menu item, and press <Enter>.

6.2.23 A “Microsoft MS-DOS 6.22 Setup” screen will appear, displaying directory information.

6.2.24 MS-DOS files MUST be placed in directory “C:\DOS”. Follow the on-screen instructions to change as necessary.

Press **<Enter>** when complete.

6.2.25 The MS-DOS 6.22 installation process will begin. Follow screen instructions when additional diskettes are required.

6.2.26 Upon completing the loading of Disk 3, remove the diskette from the drive and press **<Enter>**.

6.2.27 A "MS-DOS Setup Complete" message will be displayed. Press **<Enter>** to restart the computer.

The boot process is complete when the "C:\>" prompt is displayed.

6.2.28 At the prompt, type **ATTRIB COMMAND.COM <Enter>** (not case sensitive). This will show the attributes of the command.com file.

The MS-DOS loading process makes this file "read-only" (R displayed next to the name).

6.2.29 The MacLab Software download process requires the removal of the "read-only attribute.

At the prompt, type **ATTRIB -R COMMAND.COM <Enter>** (not case sensitive).

6.3 Software Loading

6.3.1 Using the LAN survey of the customer's site, select the appropriate load CD from the following list:

Ethernet Topology

Operating System	Protocol	Load CD
WFW	Netbeui, IPX/SPX, TCP/IP	**MT-5249**
Novell	IPX ver 4.00	**MT-5250**
WFW, Novell	Netbeui, IPX/SPX (ver 4.00), TCP/IP	**MT-5250**

6.3.2 Place the appropriate CD into the CD Loader Case and insert into the CD ROM drive of the NT Server (MT-5257).

6.3.3 Verify that the NT Server has an active connection to the Ethernet Hub.

6.3.4 Insert the Buffer Server Load Diskette (MT-5247) into the floppy drive of the Buffer Server under test.

6.3.5 Verify that the ethernet cable is connected to the UUT Intel network card (slot 3).

6.3.6 Start the software initialization sequence as follows:

6.3.6.1 If the system power is off, apply power to the UUT.

6.3.6.2 Power cycle the system, or press the reset button (if applicable).

6.3.7 The system will reboot, and the software configuration/loading process will begin. During the 'net start' configuration routine, a "Type your user name, or press ENTER if it is MILLSEL:" prompt will appear.

Type **administrator <Enter>**.

A "Type your password:" prompt will then appear.

Type **administrator <Enter>**.

6.3.8 The software download process from the NT Server will begin. The process is complete when the "C:\>" prompt is displayed.

6.3.9 Remove load diskette from the Buffer Server under test, and power cycle the system (or press the reset button).

6.3.10 For TCP/IP protocol systems ONLY, the following message will be displayed during the Windows loading process:

DHCP.386
This DHCP client was unable to obtain an IP network address from a DHCP server. Do you want to see future DHCP messages?
Press Y for Yes or N for No:

Press **Y**.

NOTE: This response should be given anytime this message appears on the UUT

6.3.11 A "Corrupt Swap-File Warning" message may be displayed. Press **Y** on the keyboard to delete the corrupt swap file. The loading process will continue.

6.3.12 The "Welcome to Windows for Workgroups" welcome screen will appear.

Enter **BUFFY** for the password (not case sensitive).

Press <**Enter**> on UUT keyboard or select the **OK** menu button when complete.

6.3.13 A MACLAB Assistant screen will appear, indicating that the boot sequence has completed.

6.4 Swap File

6.4.1 For initial swap file configurations, proceed as follows:

6.4.1.1 Press **Alt+Tab** on the UUT keyboard until the Program Manager window appears.

6.4.2 If this is a subsequent configuration, proceed as follows:

6.4.2.1 Close the MACLAB Assistant window by selecting the “File” menu followed by the “Exit to Windows” item.

6.4.2.2 A “MACLAB Assistant” window will be displayed, warning about loss of bi-directional communication services.

Using the mouse, select **Yes**.

6.4.2.3 Close the MAC-LAB Report Transfer window by selecting the “File” menu followed by the “Exit” item.

6.4.3 From the Program Manager screen, use the mouse to select the following:

Main program group.
Control Panel program group.
Enhanced program item.
Virtual Memory option.

6.4.4 A “Virtual Memory” window may appear, asking about setting the corrupt file to zero length. Select the **Yes** button.

The “Virtual Memory” screen will appear. Press the **Change>>** button.

6.4.5 In the swap file size box, enter **0** as the new size.

Press **<Enter>** on the UUT keyboard, or select the **OK** menu button when complete.

6.4.6 A “Virtual Memory” information window will be displayed, confirming that the size-file type be set to None.

Select the **Yes** button.

6.4.7 A “Virtual Memory” window will appear, asking for confirmation on the changes to the virtual memory settings.

Select the **Yes** button.

6.4.8 A “Virtual Memory” window will be displayed, to restart Windows for changes to take effect.

Select the **Restart Windows** button.

6.4.9 A “Windows for Workgroups” message will appear, warning of user disconnections.

Select the **Yes** button.

6.4.10 At the “Welcome for Windows for Workgroups” screen, enter **BUFFY** for the password (not case sensitive)

Press **<Enter>** on the keyboard, or select the **OK** button when complete.

6.4.11 A MACLAB Assistant screen will appear, indicating that the boot sequence has completed.

6.4.12 Press **Alt+Tab** on the UUT keyboard until the Program Manager window appears.

6.4.13 From the Program Manager screen, use the mouse to select the following:

Main program group.
Control Panel program group.
Enhanced program item.
Virtual Memory option.
Change>> button.

6.4.14 In the swap file size box, verify that the new size is 20480 KB.

Press **<Enter>** on the UUT keyboard, or select the **OK** menu button when complete.

6.4.15 A “Virtual Memory” window will be displayed, asking if your sure about making the changes to virtual-memory settings.

Select the **Yes** button.

6.4.16 A “Virtual Memory” information window will appear, indicating that a 20512K permanent swap file has been created.

Select the **OK** button.

6.4.17 A “Virtual Memory” window will be displayed, to restart Windows for changes to take effect.

Select the **Restart Windows** button.

6.4.18 A “Windows for Workgroups” message will appear, warning of user disconnections.

Select the **Yes** button.

6.4.19 For TCP/IP protocol systems ONLY, the following message will be displayed during the Windows loading process:

DHCP.386
This DHCP client was unable to obtain an IP network address from a DHCP server. Do you want to see future DHCP messages?
Press Y for Yes or N for No:

Press **Y**.

NOTE: This response should be given anytime this message appears on the UUT

6.4.20 At the “Welcome for Windows for Workgroups” screen, enter **BUFFY** for the password (not case sensitive)

Press **<Enter>** on the keyboard, or select the **OK** button when complete.

6.4.21 A MACLAB Assistant screen will appear, indicating that the boot sequence has completed.

6.5 MacLab Test

6.5.1 Connect a MacLab EX Test Fixture (or MacLab EX System) to the Ethernet Hub.

6.5.2 Turn on power to the MacLab EX Test Fixture.

6.5.3 Using the arrow keys, highlight the “Admit a NEW patient” ADMIT menu item on the MacLab EX Test Fixture and press **<Enter>**.

6.5.4 Using the TAB key, access the “Last Name” field and enter **DOE <Enter>**.

6.5.5 Access the “First Name” field and enter **JOHN <Enter>**.

6.5.6 Press **ESC** to return to the main menu.

6.5.7 Using the arrow keys, access the “Service” menu on the MacLab EX Test Fixture and press **<Enter>**.

6.5.8 Access the “LAN” menu item and press **<Enter>**.

6.5.9 Verify the following information:

LAN type:	NetBEUI
LAN status:	Fully Loaded
Workstation Name:	BUFFY000 (ACTIVE)

The above setup is required for communication to the Buffer Server under test. If the information does not match, correct as necessary.

6.5.10 Press **ESC** twice to return to the Main menu.

6.5.11 At the Buffer Server under test, verify that the admitted patient is visible in the “Current Event Log” window of the MACLAB Assistant.

The signal light icon in the MACLAB Assistant screen should be green

6.5.12 Using the arrow keys on the MacLab EX Test Fixture, highlight the “Adm/Dis” menu and press **<Enter>**.

6.5.13 At the “DISCHARGE” menu, highlight the “Discharge and save data to workstation” menu item and press **<Enter>**.

6.5.14 The discharge function will take place and is complete when the “ADMIT” menu is displayed.

6.5.15 At the Buffer Server under test, monitor the MACLAB Assistant screen. When the signal light icon turns red, press **Alt+Tab** on the UUT keyboard until the MAC-LAB Report Transfer window appears.

6.5.16 On the Buffer Server under test MAC-LAB report Transfer window, verify that the patient record appears in the “List of Patient Reports”.

6.5.17 Highlight the patient record and press the **Delete Report** button.

6.5.18 The following information screen will be displayed:

Mac-Lab Report Transfer

Are you sure you want to delete the selected report(s)?

Yes No

Select the **Yes** button.

6.6 3Com Ethernet Card

6.6.1 Move the twisted pair ethernet connection from the Intel network card in slot 3 (bottom slot) to the 3COM card in slot 2 (top slot). Refer to MacLab Test Network drawing in Appendix A as necessary.

6.6.2 Press **Alt+Tab** on the UUT keyboard until the Program Manager window appears.

6.6.3 From the "Program Manager" screen, use the mouse to select the following:

Main program group.
Control Panel program group.
Network program item.

6.6.4 The "Microsoft Windows Network" window will open.

6.6.5 Verify that the "Workgroup" is **FLAGWL**, and change as necessary.

Select the **OK** button when complete.

6.6.6 If the "Workgroup" name was changed in the step above, the following section is applicable:

6.6.6.1 A "Control Panel" window will be displayed, to restart Windows for changes to take effect.

Select the **Restart Windows** button.

6.6.6.2 A "Windows for Workgroups" message will appear, warning of user dis-connections.

Select the **Yes** button.

6.6.6.3 <u>For TCP/IP protocol systems ONLY</u>, the following message will be displayed during the Windows loading process:

DHCP.386
This DHCP client was unable to obtain an IP network address from a DHCP server. Do you want to see future DHCP messages?
Press Y for Yes or N for No:

Press **Y**.

NOTE: This response should be given anytime this message appears on the UUT

6.6.6.4 At the “Welcome for Windows for Workgroups” screen, enter **BUFFY** for the password (not case sensitive)

Press **<Enter>** on the keyboard, or select the **OK** button when complete.

6.6.6.5 A MACLAB Assistant screen will appear, indicating that the boot sequence has completed.

6.6.6.6 Press **Alt+Tab** on the UUT keyboard until the Program Manager window appears.

6.6.7 From the Program Manager screen, use the mouse to select the following:

Main program group.
File Manager program item.
Disk menu item.
Connect Network Drive … option.
Browse >> button.

6.6.8 Verify that the following workgroups appear in the “Show Shared Directories on:” window:

FLAGWL
BUFFY000
GWLMAST

6.6.9 Select the **Cancel** button to return to File Manager.

6.6.10 <u>For Ethernet Novell systems ONLY</u>, the following section is applicable:

6.6.10.1 From the “File Manager” screen, use the mouse to select the following:

Disk menu item
Connect Network Drive … option
NetWare … button

6.6.10.2 The “Netware Drive Connections” screen will appear. Press the “Drive Connections” button 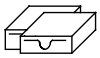 or press **Alt+D** on the keyboard.

6.6.10.3 The Novell Server (BUFFER) should be displayed, as shown below:

**F: \\BUFFER\SYS\LOGON **

6.6.10.4 To return to the “Connect Network Drive” window, press the “Exit” button or press **Alt+X** on the keyboard

6.6.10.5 Press the **Cancel** button to return to the "File Manager" window.

6.6.11 Exit the File Manager by selecting the following:

File menu
Exit menu item

6.6.12 The main Program Manager window will be displayed.

7. CUSTOMER CONFIGURATION

NOTE: This section needs to be performed if the Workstation / Networking Information on the Pre-Installation Survey calls for an interface to a MUSE workstation.

7.1 Close the MACLAB Assistant window by selecting the "File" menu followed by the "Exit to Windows" item.

7.2 A "MACLAB Assistant" window will appear, warning of the loss of bidirectional communication services.

Select the **Yes**. button

7.3 Close the MAC-LAB Report Transfer window by selecting the **File** menu followed by the **Exit** item.

7.4 Using the Workstation / Networking information from the site survey, select the appropriate software using the chart below:

Software	MUSE 1B.0	MUSE 4A	MUSE 4B	MUSE 5A	MUSE 5B
MacLab Assist	418978-001	418927-001	419400-001	421523-002	901201-001
Report XFER	418979-001	418979-001	418979-001	421412-002	421412-002
BTRIEVE	N/A	N/A	N/A	421414-002	421414-002

NOTE: The following sections should be repeated for the installation of each software package.

7.5 Load the software diskette into the UUT.

7.6 From the "Program Manager" screen, use the mouse to select the following:

Main program group.
File Manager program item.
File menu.
Run … menu option.

NOTE: The steps outline below should be performed for the installation of each software package.

7.7 A "Run" window will be displayed. Enter **A:\Setup** in the Command Line box.

Press <**Enter**> on the UUT keyboard, or select the **OK** button when complete.

7.8 The setup routine on the diskette will run, installing the appropriate software.

7.9 Remove the diskette when the installation is complete.

7.10 Reboot the system under test, as necessary.

8. POST-TEST INSTRUCTIONS

8.1 Shutdown Windows for Workgroups on the UUT as follows:

8.1.1 From the "Program Manager" screen, use the mouse to select the following:

File menu
Exit Windows … menu item

8.1.2 A "Exit Windows" confirmation screen will be displayed. Select the **OK** button.

8.1.3 A "Windows for Workgroups" message will appear, warning of user disconnections.

Select the **Yes** button.

8.1.4 The shutdown of windows is complete when the "C:\>" prompt is displayed.

8.2 Turn off power to the UUT.

8.3 Remove all cabling from the Buffer/Server under test.

8.4 Return the Buffer Server under test to its original packaging.

8.5 Complete device history record. Refer to QS1003 (QA Device History Record Guidelines) for further information.

9. APPENDIX A

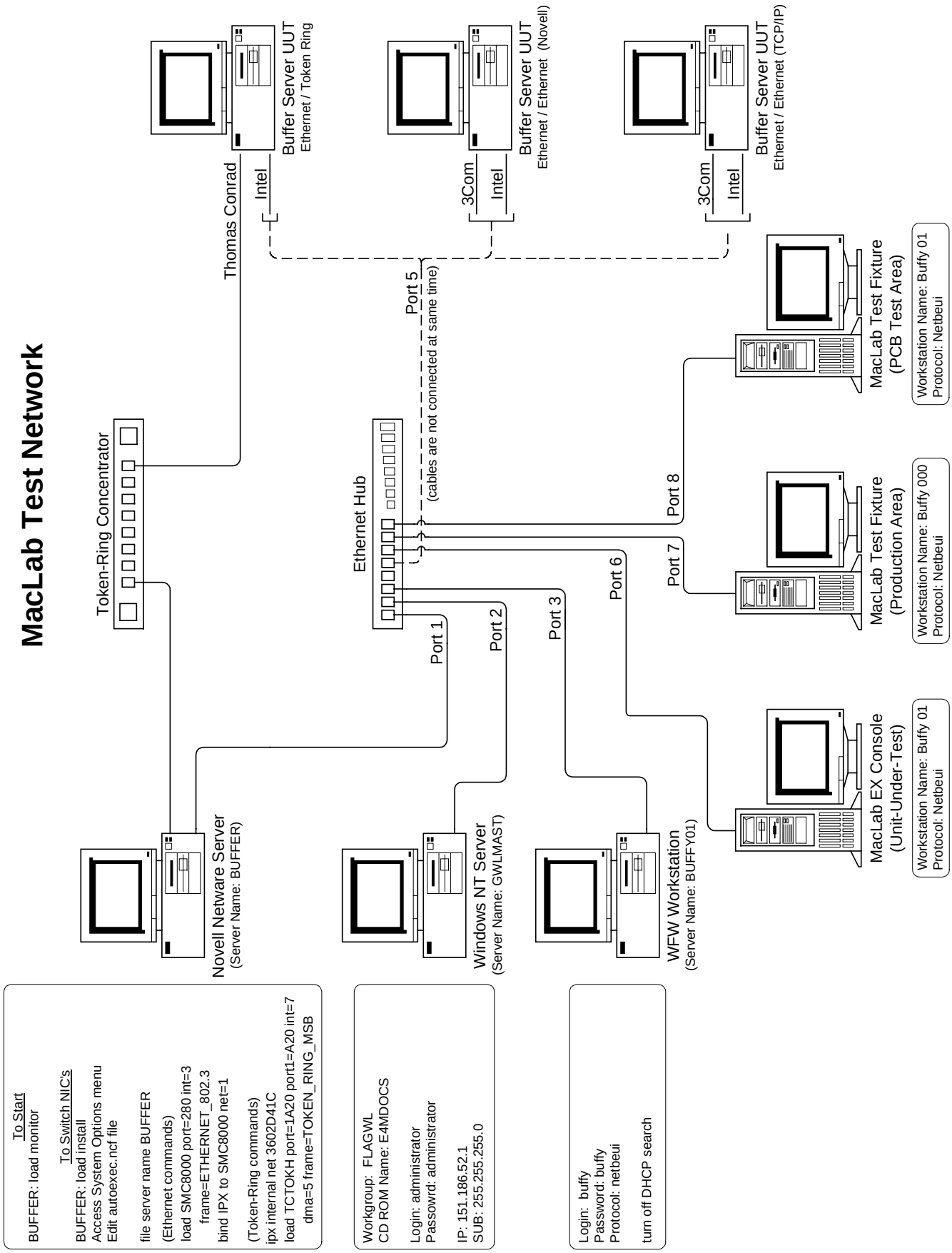
MacLab Test Network
Buffer Server UUT
Ethernet / Token Ring
Buffer Server UUT
Ethernet / Ethernet (Novell)
Buffer Server UUT
Ethernet / Ethernet (TCP/IP)
Thomas Conrad
Intel
3Com
Intel
3Com
Intel
Port 5
(cables are not connected at same time)
Token-Ring Concentrator
Ethernet Hub
Port 1
Port 2
Port 3
Port 6
Port 7
Port 8
MacLab Test Fixture
(PCB Test Area)
Workstation Name: Buffy 01
Protocol: Netbeui
MacLab Test Fixture
(Production Area)
Workstation Name: Buffy 000
Protocol: Netbeui
MacLab EX Console
(Unit-Under-Test)
Workstation Name: Buffy 01
Protocol: Netbeui
Novell Netware Server
(Server Name: BUFFER)
Windows NT Server
(Server Name: GWLMAST)
WFW Workstation
(Server Name: BUFFY01)
To Start
BUFFER: load monitor
To Switch NIC's
BUFFER: load install
Access System Options menu
Edit autoexec.ncf file
file server name BUFFER
(Ethernet commands)
load SMC8000 port=280 int=3
frame=ETHERNET_802.3
bind IPX to SMC8000 net=1
(Token-Ring commands)
ipx internal net 3602D41C
load TCTOKH port=1A20 port1=A20 int=7
dma=5 frame=TOKEN_RING_MSB
Workgroup: FLAGWL
CD ROM Name: E4MDOCS
Login: administrator
Passowrd: administrator
IP: 151.186.52.1
SUB: 255.255.255.0
Login: buffy
Password: buffy
Protocol: netbeui
turn off DHCP search

5 Integrated Maintenance Suite

General Information 5-3
Database Backup 5-3
Network Backup 5-3

Daily Responsibilities 5-4
Rotate Backup Tapes (Not Required for Network Backup) 5-5
Review the *Event Log* 5-6
Check That the IMS Application Ran 5-6
Check for Integrity Errors 5-7
Check for a Failed Backup (Not Required for Network Backup) 5-7
Check for Proper Tape Rotation (Not Required for Network Backup) 5-7
Check for System Messages 5-8
Check for Archive (Not Required for Network Backup) 5-8
Review the *Error Log* 5-8

Weekly Responsibilities 5-9
Run the Cleaning Cartridge 5-9

Monthly Responsibilities 5-10
Update the Monthly Backup Tape 5-10
Update the Monthly Service Tape 5-10

Annual Responsibilities 5-11
Tape Replacement (Backup Tapes) 5-11
Replace the Cleaning Cartridge 5-11

Miscellaneous 5-12
Manual Backup 5-12
Changing the IMS Run Time 5-12
Getting the Media Create Date and Label 5-13
Other Files 5-13

Disaster Recovery 5-14
Introduction 5-14
System Information 5-14

Required Software 5-14
NT Specific Recovery 5-15
Backing up the Registry 5-15
Redoing the Emergency Repair Disk 5-15
Reapplying the NT Service Pack 5-15
Creating NT Boot Disks 5-15
How to Create a Windows NT Boot Floppy 5-16
Recovery Steps 5-18
Typical boot failure messages 5-18
Rebuilding a Bad Drive 5-19
Windows 95 Specific Recovery 5-19

System Shutdown & Restart Procedures 5-20
Shutdown the MUSE CV System 5-20
Shutdown the NT File Server 5-22
Power Up Procedure 5-22
Start-Up Verification 5-22

General Information

The Integrated Maintenance Suite (IMS) application is provided with the MUSE CV system for database backup and archive, as well as integrity checking, queue rebuilding, and system shutdown and restart. The system uses a third party package to allow the file server to remain online during backup and therefore all workstations will also remain active during backup.

The MUSE CV system has been set up to automatically run the IMS application every night at 2:00 am. When the IMS application runs, it does the following tasks:

- Integrity checking,
- Database analysis.
- Archive checking. Before doing a backup, the IMS applications checks if an archive should occur.
- Database archive. If the sig filename approaches “255”, or the total size of Type 0 volume plus the size of the active volume approaches the capacity of the DAT backup tape (approximately 4GB or 12GB), an automatic archive will occur.
- Database backup. Database backup does not occur for systems which have been set up for network backup.
- Detailed logging of messages.

Database Backup

Under normal circumstances, the IMS application does a **full backup every day** to the DAT tape inserted at the file server.

A set of seven DAT tapes (4GB or 12GB) is provided for the 7-day backup rotation used by the IMS application. The IMS application requires that you sequence through the set of seven tapes, maintaining the same order every week. If the tapes are used out of sequence, the full backup is performed and an “out of sequence” warning is logged.

Network Backup

If the user has agreed to use their own network backup, they assume full responsibility for all data residing on the file server. IMS will not perform any data backup.

Daily Responsibilities

The following daily responsibilities are required in order to use the IMS application responsibly.

- Rotate Backup Tapes. Insert the correct DAT tape every day.

> **NOTE**
>
> For systems using the network backup option, tape rotation is not required.

- Review the *Event Log*.
- Review the *Error Log,* if necessary.

> **NOTE**
>
> The MUSE CV system uses a third party package to allow the file server to remain online during backup. During periods of heavy MUSE CV system traffic (for example, more than normal acquiring, editing, printing, and HIS link traffic), backup may skip some files, therefore it is important to review the *Error* and *Event Logs* to verify the integrity of the backup.

Rotate Backup Tapes (Not Required for Network Backup)

A set of seven tapes (4 or 12GB) is required for the complete backup cycle required by the IMS application. This set of tapes comes with a set of labels which includes three kinds of labels:

- A set of seven “day of the week” labels (Sunday through Saturday)
- A set of “usage” labels (with a grid for recording date tape was used)
- Two “archive” labels.

Each of the seven weekly tapes should have a “day of the week” label and a “usage” label affixed.

NOTE

With 005A software there is no magnetic pre-labeling of DAT backup tapes.

IMPORTANT

In order to improve tape reliability, record the date each tape is used. This includes each time a tape may be re-used over a weekend (for users that are unable to rotate tapes on weekends).

The MUSE CV system has been set up to automatically run the IMS application every night at 2:00 am. Therefore, every day before the 2:00 am automatic backup, you must remove the previous backup tape and insert the next one.

1. Press the eject button on the DAT drive to eject the current tape.
2. Wait for the tape to rewind and eject.

   NOTE

   If the tape was ejected by IMS, review the *Event Log* to determine why. It could be a failed tape or an archive tape.

3. Record the date(s) the tape was used on the usage grid.
4. Place the tape back into its jacket.
5. Find and insert the next day’s tape.

Review the *Event Log*

Check That the IMS Application Ran

When the IMS Application runs, the following ten messages are logged to the *Event Log*:

- *IMS Ended*
- *IMS Backup/Archive Ended*
- *IMS Backup Archive: Sequence (X),(Ø)file errors (Does not appear in list when network backup is performed.)*
- *IMS Using Network Backup (Appears in list only when network backup is performed.)*
- *IMS Backup/Archive Started*
- *IMS Integrity Ended*
- *IMS Integrity Started (CHKPTRS)*
- *IMS Integrity Ended*
- *IMS Integrity Started (DBANL)*
- *IMS Started*

NOTE

These ten messages indicate the IMS application has run. If they are not listed in the *Event Log* , call GE Marquette Service.

All eight messages appear in the *Event Log* shown below. This indicates the IMS application ran.

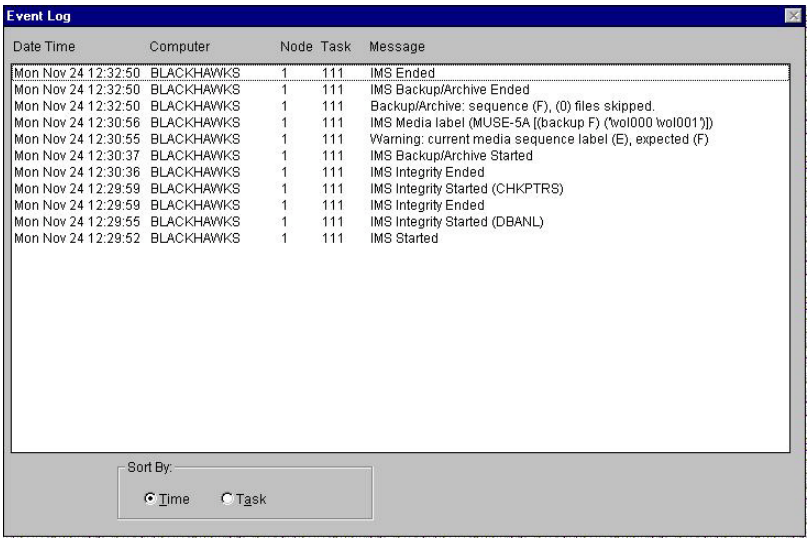

Date Time	Computer	Node	Task	Message
Mon Nov 24 12:32:50	BLACKHAWKS	1	111	IMS Ended
Mon Nov 24 12:32:50	BLACKHAWKS	1	111	IMS Backup/Archive Ended
Mon Nov 24 12:32:50	BLACKHAWKS	1	111	Backup/Archive: sequence (F), (0) files skipped.
Mon Nov 24 12:30:56	BLACKHAWKS	1	111	IMS Media label (MUSE-5A [(backup F) ('vol000 \vol001')])
Mon Nov 24 12:30:55	BLACKHAWKS	1	111	Warning: current media sequence label (E), expected (F)
Mon Nov 24 12:30:37	BLACKHAWKS	1	111	IMS Backup/Archive Started
Mon Nov 24 12:30:36	BLACKHAWKS	1	111	IMS Integrity Ended
Mon Nov 24 12:29:59	BLACKHAWKS	1	111	IMS Integrity Started (CHKPTRS)
Mon Nov 24 12:29:59	BLACKHAWKS	1	111	IMS Integrity Ended
Mon Nov 24 12:29:55	BLACKHAWKS	1	111	IMS Integrity Started (DBANL)
Mon Nov 24 12:29:52	BLACKHAWKS	1	111	IMS Started

MD1313-22A

NOTE

The eight messages may not appear consecutively. Other messages may appear within the sequence.

Check for Integrity Errors

Review the *Event Log* for the following message.

- *ERROR: Integrity Failed*

> **NOTE**
>
> If this message appears in the *Event Log*, call GE Marquette Service.

Check for a Failed Backup (Not Required for Network Backup)

Review the *Event Log* sorted by *Time*. If you find any of the following messages, you must assume the backup has failed and you need to perform a manual backup. See “Manual Backup” for details.

- *ERROR: Unable to access the tape* – Check to be sure a DAT tape was inserted.
- *ERROR: Backup/Archive: sequence (?), (#) files skipped* (where ? is replaced by the rotation and # is replaced by a number).
- *ERROR: ntbackup.log size unchanged for 60 minutes*

> **NOTE**
>
> **DO NOT** assume a successful backup has occurred if the *Event Log* contains no error messages. It is possible that IMS may not have run at all.

> **NOTE**
>
> If repeated failures occur due to skipped files, it may be due to heavy MUSE usage during backup. See "Changing the IMS Run Time" for more information on re-scheduling the time at which the IMS application runs.

Check for Proper Tape Rotation (Not Required for Network Backup)

Also check the *Event Log* to ensure for proper DAT tape rotation.

If the line *Warning: current media sequence label (?), expected (??)* appears in the *Event Log* (where ? and ?? are replaced by the rotation found and expected), this indicates that the tape was not rotated prior to the backup operation.

> **NOTE**
>
> This *Warning* line does not indicate a failed backup.
>
> However, to ensure equal use of each tape in the backup set, be sure you always remember to rotate tapes. Users who are unable to rotate tapes on the weekends will always see warning on the weekends.

Check for System Messages

Other system messages which may be logged to the *Event Log* by the IMS application are important to note.

- Disk full warning messages. When the volume of data on the hard disk is reaching capacity, the IMS application begins logging messages to the Event Log. This message should first appear approximately 30 days before the hard drive is filled. When this message first appears in the *Event Log*, contact GE Marquette Service. It is necessary to add an additional hard drive to your fileserver.
- Archive prediction. As the system approaches automatic archive conditions, the IMS application logs appropriate messages to the *Event Log*. IMS includes the predicted number of days until archive (based on daily use) in the *Event Log.*

Check for Archive (Not Required for Network Backup)

If an archive has taken place, it will be noted in the *Event Log*. Also, the DAT tape will be ejected from the DAT drive in the fileserver.

1. Remove the archive backup tape from the DAT drive. Label it as noted in the *Event Log*. Slide the write protect tab off and store in a safe place.
2. Label a new blank DAT tape (PN 413628-001) to replace the daily tape removed from the rotation in step 1. (Label tape with the same “day of the week” label as the tape you removed.)
3. Insert the next day’s tape. The IMS application will make another archive backup copy the following night.
4. The next morning, after the IMS application has made the second archive backup tape, remove the tape and label it as noted in the *Event Log*. Write protect it and store it with the first archive backup tape.
5. Label another new DAT tape to replace the daily tap removed from the rotation in step 4. (Again, use the same “day of the week” as the tape you removed.)

NOTE

Expect to see *Warning: current media sequence label (?), expected (?)* messages in the *Event Log* when the new DAT tapes are encountered the next week.

Review the *Error Log*

Review the *Error Log* for more specific information about the IMS application errors.

Weekly Responsibilities

Run the Cleaning Cartridge

GE Marquette recommends cleaning the DAT drive once every week.

> **NOTE**
>
> For systems using the network backup option, cleaning is required only once a year.

1. Remove the current backup tape from the DAT drive.
2. Insert the cleaning cartridge (PN 409669-001) into the DAT drive.
3. Watch for the green drive light to blink as cleaning takes place.

   The tape will be automatically ejected when cleaning is completed.

   > **NOTE**
   >
   > If the tape is automatically ejected without the green light blinking that indicates that the cleaning tape has been used up and it must be replaced.
   >
   > The estimated life of the cleaning cartridge tape is 50 cleanings.

4. Remove the cleaning cartridge and insert the next backup tape.

Monthly Responsibilities

NOTE

The following monthly responsibilities are required if the systems are using database backup and are recommended if the systems are using network backup.

Update the Monthly Backup Tape

1. Find and insert the Monthly Backup tape.
2. Select *Start* → *Programs* → *MUSE CV Information System* → *Integrated Maintenance Suite* → *Manual Backup*.

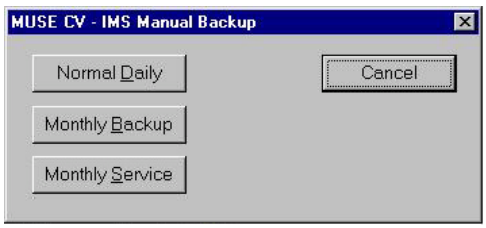

3. Select the *Monthly Backup* button.
4. Wait for the progress bar to disappear.
5. Wait for the tape to be ejected.
6. Remove the Monthly Backup tape.
7. Continue with “Update the Monthly Service Tape”.

Update the Monthly Service Tape

1. Find and insert the Monthly Service tape.
2. Select *Start* → *Programs* → *MUSE CV Information System* → *Integrated Maintenance Suite* → *Manual Backup*.

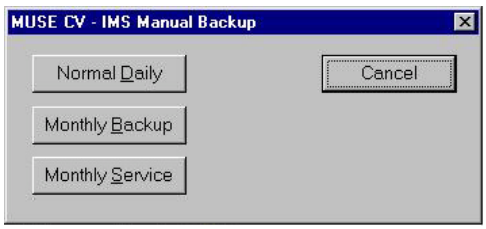

3. Select the *Monthly Service* button.
4. Wait for the progress bar to disappear.
5. Wait for the tape to be ejected.
6. Remove the Monthly Service tape.
7. Insert the next backup tape from the front of the rotation stack.

Annual Responsibilities

NOTE

The following annual responsiblities are not required if the systems are using network backup.

Tape Replacement (Backup Tapes)

To ensure integrity of the backup, GE Marquette recommends you replace the entire set of seven backup tapes **once every year**.

NOTE

If your system has a 4GB DAT drive, be sure you use 4GB DAT tapes for backup. (4GB DAT tapes are labeled 120 meters-DDS2.)

If your system has a 12GB DAT drive, be sure you use 12GB DAT tapes for backup. (12GB DAT tapes are labeled 125 meters-DDS3.)

Replace the Cleaning Cartridge

As mentioned previously, the expected life of the cleaning cartridge is 50 cleanings. By cleaning the DAT drive once every week, you can expect to replace the cleaning cartridge (PN 409669-001) **once every year**.

Miscellaneous

Manual Backup

NOTE

During "Normal Daily" operation, manual backup will not be performed on systems which are setup for network backup. They will, however, perform integrety checking, archive checking and archive, if necessary.

1. Select *Start* → *Programs* → *MUSE CV Information System* → *Integrated Maintenance Suite* → *Standard*.

2. Make sure that the correct tape is in the DAT drive.
3. Select *Normal Daily*.
4. Wait for the progress bar to disappear.
5. Review the *Error* and *Event Logs*. See "Review the Event Log" and "Review the Error Log" for details.
6. Eject the tape.

Changing the IMS Run Time

The system is automatically set up to run the IMS application every night at 2:00 a.m. If you need to change the automatic backup time, follow the steps outlined below.

NOTE

The IMS Run Time should always be set to a time when the least amount of system activity is occurring. For example, for systems with a HIS interface, do not schedule IMS to run when batch HIS transmissions occur.

1. Select *Start → Programs → MUSE CV Information System → Integrated Maintenance Suite → Advanced*.

   The *Advanced* window is displayed.
2. Select *System → Set Auto Run Time*.
3. Right click on the entry containing *CVIS0122 – AutoRun* and select *Change*.
4. Edit the time, select *OK*.
5. Close WinAt.
6. Close the MUSE-IMS *Advanced* window.

Getting the Media Create Date and Label

1. Select *Start → Programs → MUSE CV Information System → Integrated Maintenance Suite → Advanced*.
2. Select *Backup/Archive → Media Create Date*.
3. Displayed will be status information and finally: Media Date (Tape created on 11/4/97).
4. Select *Backup/Archive → Media Label*.
5. Displayed will be status information and finally: Media Label

Other Files

The IMS application writes information to several log files. Daily log files for the previous seven days are stored on the D-drive in *Vol000 → System → Errlog*. A partial list includes:

- IMS_?.LOG
- CHKPTRS.LOG
- DBANAL.LOG
- BACK_?.LOG
- ARC_#_#.LOG

Disaster Recovery

NOTE

Systems using network backup require assistance from the I.S. Department if disaster recovery is necessary.

Introduction

This section describes general guidelines for the recovery of MUSE CV 005A systems. This information is intended to serve as a guide for preventative measures to backup and save configuration information after the system is modified. Preventative steps must be taken to ensure proper recovery of the system in the event of failure.

System Information

To rebuild the computer, it is necessary to have the following information about the computer.

- Computer type, model number, and serial number
- Computer BIOS manufacturer and revision level
- Hardware configuration information, including IRQs, DMA addresses, I/O ports, and similar information
- SCSI configuration information including; SCSI configuration information from SCSI setup program, which devices are terminated and how they are terminated, the SCSI ID and physical location on the chain of every SCSI device.
- Which versions of the operating system are installed, and the partitions on which they are installed.
- Partition information

Required Software

To troubleshoot and rebuild a system it is necessary to have the following software.

- Current operating system software
- Current hardware device drivers for each device in the system
- Current Service Pack and/or patches
- NT boot disk
- Emergency repair disk
- Tape backups of the file server operating system and the data.

NT Specific Recovery

Backing up the Registry

The registry may be backed up using three different methods:

1. Using the emergency repair disk. To restore from this backup, setup must be started from the 3 floppy disks and NT setup controls the restore.
2. Using Regedt32 to backup the registry. This utility allows for individual keys to be saved and restored. Useful for restoring only parts of the registry.
3. Using MUSE IMS and backing up the C-Drive. This allows NTBACKUP to be used to restore the entire registry from tape backup.

Windows NT reference books recommend that it is a good idea to backup the registry using several different sources.

Redoing the Emergency Repair Disk

Redo the Emergency Repair Disk by running: rdisk /s on the file server or NT workstation node after changes have been made to:

- Any global or local NT user or group configurations
- Any changes to the registry
- Any changes to the system or system profile(s)
- Any changes to the disk (i.e. using Disk Administrator)

Reapplying the NT Service Pack

Reapply the service pack if any changes are made to:

- Network configuration
- Any information is copied from the NT Server CD

Creating NT Boot Disks

This Windows NT boot disk can access a drive that has the Windows NT file system (NTFS) or file allocation table (FAT) file system installed. The procedures in this article can be useful to work around the following boot problems:

- Corrupted boot sector.
- Corrupted master boot record (MBR).
- Virus infections.
- Missing or corrupt NTLDR or NTDETECT.COM.
- Incorrect NTBOOTDD.SYS driver.

This boot disk can also be used to boot from the shadow of a broken mirror, although you may need to change the BOOT.INI to do that.

This Windows NT boot disk cannot be used for the following problems:

- Incorrect or corrupt device drivers that have been installed into the Windows NT System directory.
- Boot problems that occur after the OSLOADER screen.

To work around or fix these problems, run the Emergency Repair disk, load the last known good control set, or reinstall Windows NT, if necessary.

How to Create a Windows NT Boot Floppy

The Windows NT floppy disk must include the files NTLDR (or SETUPLDR.BIN in Windows NT 3.5), NTDETECT.COM, BOOT.INI, and the correct device driver for your hard drive.

> **NOTE**
>
> The NTLDR, NTDETECT.COM, and BOOT.INI files usually have their file attributes set to System, Hidden, and Read-Only. You do not need to reset these attributes for this disk to work properly. For more information on the structure of the BOOT.INI file, see the following article in the Microsoft Knowledge Base: ARTICLE-ID: Q102873. (BOOT.INI and ARC Path Naming Conventions and Usage)

If You Do Not Have Access to a Computer Running Windows NT

1. Create a copy of the first Windows NT Setup disk using the DISKCOPY command, and then delete all files on the new disk.
2. Copy the NTDETECT.COM and NTLDR files to the new disk.
3. Rename the NTLDR file to SETUPLDR.BIN.
4. Create a BOOT.INI file.

   The following is an example that works for a single partition SCSI drive with Windows NT installed under \WINNT, however, the exact value in the [operating systems] section depends upon the configuration of the Windows NT System you want to boot:

   [boot loader]

   timeout=30

   Default= scsi(0)disk(0)rdisk(0)partition(1)\winnt

   [operating systems]

   scsi(0)disk(0)rdisk(0)partition(1)\winnt=Windows NT

   If your computer boots from an IDE, EIDE, or ESDI hard drive, replace the scsi(0) with multi(0). If you are running Windows NT 3.5 or 3.51 and your system boots from the first or second SCSI drive, then you can also replace scsi(0) with multi(0).
5. If you are using scsi(x) in the Boot.ini, copy the correct device driver for the SCSI controller in use on the computer, and then rename it to

   NTBOOTDD.SYS. If you are using multi(x) in the Boot.ini, you do not need to do this.

6. Start your computer using the floppy disk, and then log on to Windows NT.

If You Do Have Access to a Computer Running Windows NT

1. Format a floppy disk using the Windows NT format utility.
2. Copy NTLDR from the Windows NT Setup CD-ROM, Windows NT Setup floppy disk, or from a computer running the same version of Windows NT as the computer you want to access with the boot floppy. You may need to expand this file from NTLDR._ to NTLDR by using the following command line:

   EXPAND NTLDR._ NTLDR
3. Copy the NTDETECT.COM file to the disk.
4. Create a BOOT.INI file or copy one from a running Windows NT computer and modify it to match the computer you are trying to access. Below is an example which will work for a single partition SCSI drive with Windows NT installed under \WINNT, however, the exact value in the [operating systems] section depends upon the configuration of the Windows NT computer you are trying to access:

   [boot loader]

   timeout=30

   Default= scsi(0)disk(0)rdisk(0)partition(1)\winnt

   [operating systems]

   scsi(0)disk(0)rdisk(0)partition(1)\winnt=Windows NT

   If your computer starts from an IDE, EIDE, or ESDI hard drive, replace the scsi(0) with multi(0). If you are running Windows NT 3.5 or 3.51 and your computer starts from the first or second SCSI drive, then you can also replace scsi(0) with multi(0).
5. If you are using scsi(x) in the Boot.ini, copy the correct device driver for the SCSI controller in use on the computer and rename it to NTBOOTDD.SYS.

NOTE

If you are using multi(x) in the Boot.ini, you can skip step 6..

6. Start using the floppy disk, and then log on to Windows NT.

Simple (Non-Setup Related) Boot Failures

If you have been running Windows NT successfully, and it fails to boot, you can use the following simple procedure to try and recover from the problem:

1. Verify that the problem has not been caused by changes or failures in the hardware. Loose cables, bad cables, new cards,

new drives, and even new settings on existing controllers can all cause boot problems.

2. If Windows NT failed to boot after you installed a new device driver, try pressing the spacebar at the OSLOADER screen and selecting the Last Known Good option. If the boot process failed before you logged on to the system, this should correct the problem.
3. Try creating an NTFS boot disk as described in the article Q119467: Creating a Boot Disk for an NTFS Partition. This will generally only help in a situation where your basic boot files (NTLDR, NTDETECT.COM, NTBOOTDD.SYS) or your BOOT.INI file are corrupted or incorrect.
4. Boot from the Windows NT Setup disk (or run SETUPLDR on a RISC-based machine) and run the emergency repair process. For Windows NT 3.1, this requires an emergency repair disk, for Windows NT 3.5 an emergency repair disk may not be required but can help if the repair directory on the hard drive is damaged. This will solve most boot problems that involve bad system files or a corrupted registry.

Recovery Steps

NT Boot Problems

Documentation exists that helps troubleshoot Windows NT boot problems. The tools to have to recover from NT boot problems are:

1. Emergency repair disk
2. NT boot floppy
3. 3 setup floppies and NT CD

Typical boot failure messages

Table 5-1. Boot Failure Messages and Resolutions

Message	Resolution
BOOT: Couldn't find NTLDR Please insert another disk.	Ntldr file is missing Use the Emergency Repair process to recover
NTDETECT V1.0 Checking Hardware... NTDETECT failed	Ntdetect.com is missing or boot.ini is bad Use the Emergency Repair process to recover
Windows NT could not start because the following file Is missing or corrupt: \winnt root\system32\ntoskrnl.exe Please re-install a copy of the above file	Ntoskrnl.exe is missing Use the Emergency Repair process to recover
I/O Error accessing boot sector file Multi(0)disk(0)partition(1):\bootsect.dos	Bootsect.dos is missing

Rebuilding a Bad Drive

Use the Emergency Repair process to recover. Recovering a disk from scratch is an involved process for NT and MUSE version 005A. Recovery is based on the following assumptions:

1. Current usable backup of C-Drive exists
2. Current usable backup of D-Drive exists
3. Current usable backup of any active archive data exists.

You cannot restore an active NT partition using NT backup restore. The recovery process uses a temporary bootable NT FAT partition to restore the current C-Drive from tape. The entire process starting from a clean disk takes 3 hours. This does not include the time needed to physically replace the drive.

1. Install new drive into system or clean old drive to all free space
2. Create a minimum NT installation using the c:\junk directory. This installation should be a member server, no network installed, and the proper tape driver for the tape drive. The purpose of this installation is to boot strap the system in order to restore the C-Drive tape. Create a 1 Gig and 8 Gig partition.
3. Restore C-Drive from the tape of the last successful backup.
4. Boot from C-Drive and restore D-Drive data. Restore the archive data in the order from newest to oldest. Do not restore Vol000 and the active volume from any of the archive tapes. As a final step, restore Vol000 and the active volume (Vol0XX) from the last backup.
5. Delete the c:\junk installation of NT Server.

   This will bring the system back to the current point of the last backup. All data will be lost from the time between the last backup and the time which the drive failed!

Windows 95 Specific Recovery

Recovering a disk from scratch is an involved and manual process for WIN95 and MUSE version 005A.

Refer to the build instructions for Windows 95 for more information on how to restore a WIN95 system.

System Shutdown & Restart Procedures

Shutdown the MUSE CV System

Shutdown all workstations attached to the file server by initiating a MUSE shutdown on the NT file server. To initiate a system shutdown:

1. Login to the file server as MUSE Administrator.
   - Press **Ctrl** + **Alt** + **Delete** to display *Logon Information* dialog box.
   - Type **MuseAdmin** for *User name*
   - Type **Muse!Admin** for *Password* (Password is case sensitive.)
   - The correct domain may already be displayed in the *Domain* list, If not, scroll to display the correct domain.
   - Select *OK*.

   Once logged in, a teal desktop appears with icons on the left side and a task bar on the bottom.

2. Select *Start* → *Programs* → *MUSE CV Information System* → *Integrated Maintenance Suite* → *Advanced* to launch the *MUSE CV-IMS Advanced* window.
3. Select *System* → *Shutdown/Restart* to display all the *Shutdown/Restart* options.

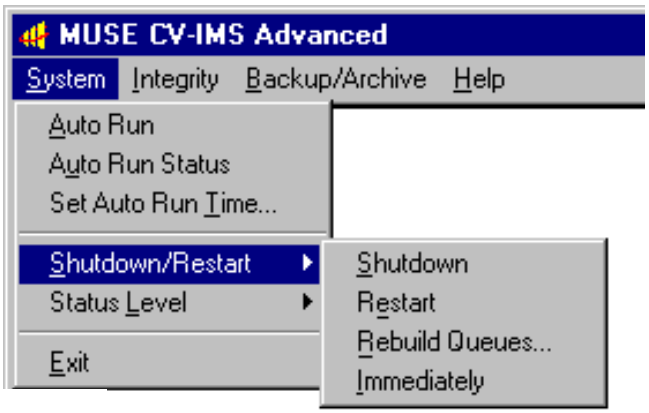

MD1313-25A

The first three options in the *Shutdown/Restart* menu initiate the MUSE CV system shutdown process whereby all MUSE services running on the NT file server and all MUSE clients attached to the server are shutdown. The shutdown is a four-minute process, allowing users of client workstations sufficient notification in order to exit their current application and log out.

The differences between the three options are as follows:

- The *Shutdown* option will result in a system shutdown. Select this option when shutting down the system for maintenance or software upgrades.
- The *Rebuild Queues* option, in addition to shutting down the system, copies over new template versions of the queues as selected by the user from an additional dialog display. When the system is restarted, those queues are then rebuilt from scratch (not just validated) by the *MUSE Service Control Manager* task (CV_SCM).
- The *Restart* option is available for a single-step shutdown/restart process for cases such as the need to activate MUSE CV system device configuration changes. The *Restart* option results in the automatic restart of the MUSE CV system.

4. Select the appropriate *Shutdown/Restart* option.
5. After selecting the shutdown option, select *OK* from the warning dialog to begin operation.

   For all options the *Shutdown Pending …* text appears in the IMS dialog context and a small blue flashing indicator appears in the lower right corner of the screen. When the operation has completed, *Shutdown OK. Code (0)* is displayed in the IMS dialog context. (Note that the IMS dialog box will remain displayed until it is manually closed out.)
6. Select *System* → *Exit* to close the *MUSE CV-IMS Advanced* window.
7. If you selected *Rebuild Queues* or *Restart* in step 4, go to “Start-Up Verification” on page 4-22.
8. If you selected Shutdown in step 4, go to “Shutdown the NT File Server” on page 4-22.

Shutdown the NT File Server

1. From the NT desktop, shutdown the NT file server by selecting *Start → Shutdown...* .

MD1313-24A

2. Select *Shut down the computer?* and click the *Yes* button.
3. After NT has completed its shutdown process, a message box will appear stating that *It is now safe to turn off your computer*, followed by a *Restart* button. At this time, you may turn off the monitor and power down the NT server.
4. At this time, you may also power down the workstation nodes and attached monitors if so desired.

Power Up Procedure

1. Power up the NT file server and attached monitor.
2. Restart clients. Wait until the NT *Begin Logon* window appears and then power on the clients.

> **NOTE**
>
> Clients which were not powered off will restart automatically.

Start-Up Verification

1. Log into the MUSE CV system.
2. Verify that all nodes had shutdown and initialized. Look for <<<<Station Shutdown>>>> <<<<Station initialization>>>> in the *Event Log*.

> **NOTE**
>
> If a node has not initialized, press its **Reset** button to manually reboot.

6 Troubleshooting

Assembly Descriptions **6-3**
Introduction 6-3
File Server 6-3
Desktop Client 6-3
Monitors 6-3
UPS 6-3
HP LaserJet 4000N Printer 6-3
MUSE Network Writer 6-3

Assembly Block Diagram **6-4**
Theory of Operation 6-6
File Server 6-6
Workstation Client 6-6
Synchronous Modem Module 6-6
Network Interface 6-7
PCB 34010 Writer Board 6-7
MAC 8 Acquisition Cable 6-7
Monitors 6-7
Printers 6-7
Uninterruptible Power Supply 6-7

General Fault Isolation **6-8**
First Things to Ask 6-8
Visual Inspection 6-8

Assembly Descriptions

Introduction

If you encounter a problem that is not addressed in the OEM manuals or if you would like further assistance, please call Technical Support at 1-800-558-7070.

File Server

Assembly and disassembly instructions can be found in the Intel or Compaq manuals that accompanied your system.

Desktop Client

Assembly and disassembly instructions as well as basic troubleshooting procedures can be found in the Intel manuals that accompanied your system.

Monitors

Basic troubleshooting procedures for the Sony monitors can be found in the Sony Operating Instruction manual that accompanied your monitor. The monitor is a field replaceable unit and should not be disassembled in the field.

UPS

Basic troubleshooting procedures for the UPS can be found in the PowerVAR or Compaq manual that accompanied your UPS. The UPS is a field replaceable unit and should not be disassembled in the field.

HP LaserJet 4000N Printer

Troubleshooting procedures and instructions for the removal and replacement of repairable items are provided in the HP Printer User's Manual and Getting Started Guide that accompanied your printer.

MUSE Network Writer

Please refer to Chapter 7, "MUSE Network Writer Module", for assembly/disassembly and troubleshooting procedures.

Assembly Block Diagram

The system level overview on the following page describes the function of each of the major assemblies in a typical MUSE CV system configuration. Please keep in mind that the diagram is only a representative sample, there are too many possible configurations to show them all.

Assembly Block Diagram

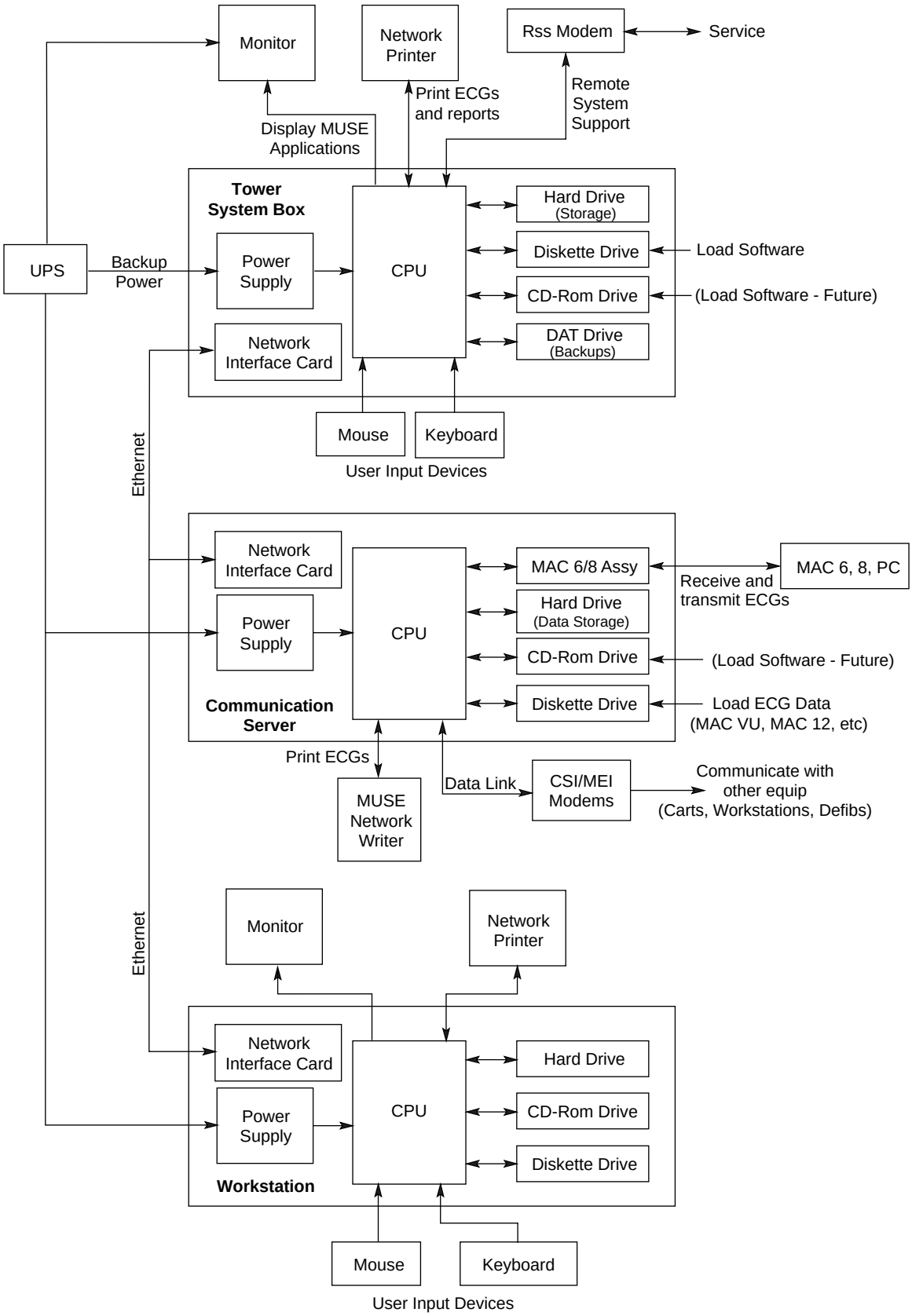

Theory of Operation

The theory of operation gives you a very broad overview of the various functional units. Refer to the OEM manuals for additional information and troubleshooting procedures.

The MUSE CV system consists of computers connected together via a local area network (LAN). There are several different computers and each is used in a different way. File servers store large numbers of ECGs and “serve” requests from other computers on the network for files. Communication servers acquire ECGs from diskette, via modem, or through a local direct connection to a resting ECG analysis system. They then process the ECG and send it to the file server.

Workstation clients allow reports to be edited and printed. Physician stations allow a physician to change reports right in the computer, or dictate the changes for a technician to incorporate at a later time. Telephone retrieval stations allow a physician to call in to the system from a telephone and hear the diagnosis for a particular patient.

Most often an ethernet local area network (LAN) system interconnects the MUSE CV system file servers, synchronous modem modules, and workstation clients together. Regardless of network technology, each computer on the network is called a “node” and has a “node ID” or “station ID” number that identifies it.

File Server

The Intel tower file server contains a motherboard, a 266MHz PII Pro processor (CPU), a 9GB hard drive, 128MB RAM, an internal 24x CD-ROM drive, 3.5” diskette drive, and DAT drive, and a power supply.

The hard drive stores the MS-DOS operating system, MUSE CV system software, and patient data. The diskette drive is used for updating software and running system diagnostics, and the DAT drive is used for system backups. The CE-ROM drive is used for software upgrades.

Workstation Client

The workstation client contains a motherboard, a 233MHz Pentium processor (CPU), one 2.1GB hard drive, 32MB RAM, an internal 24x CD-ROM drive, 3.5” diskette drive, and DAT drive, and a power supply.

The hard drive stores the MS-DOS operating system, MUSE CV system software, and patient data. The diskette drive is used for updating software and running system diagnostics, and the DAT drive is used for system backups. The CD-ROM drive is not used at the present time.

Synchronous Modem Module

The synchronous modem module (SMM) contains a motherboard, a 233MHz Pentium processor (CPU), one 2.1GB hard drive, 32MB RAM, an internal 8x CD-ROM drive and 3.5” diskette drive, and a power supply.

The SMM’s primary role is to handle communications with other systems via an assortment of modems. Options to the communication server are: MEI modem, FAX option, CSI modem, 1500 defibrillator modem, and a Holter connection.

Network Interface

The system network interface card is a selectable option. Thin, thick, or twisted pair ethernet, and token ring networks are supported.

PCB 34010 Writer Board

The PCB34010 Writer Board, also known as the network writer board, is used to generate postscript files for output to a postscript printer. It also drives the MUSE Network Writer and enables the acquisition of ECGs from a MAC 8 resting ECG analysis system through the MAC 8 acquisition cable.

MAC 8 Acquisition Cable

The MAC 8 acquisition cable is an option which enables you to acquire ECGs directly from a MAC 8 resting ECG analysis system. This is accomplished through a direct local line to the workstation client.

Monitors

The optional 15, 17, and 20” monitors are manufactured by Sony. The monitors are color, and incorporate the Trinitron display technology. The 15” monitor has a resolution of 1024 x 768 and the 17” and 20” monitors have a resolution of 1280 x 1024.

Printers

Printer options include an HP LaserJet 4000N printer and a MUSE Network Writer thermal printer manufactured by GE Marquette Medical Systems. Additional information on the HP printer can be found in the OEM manual, and information on the Network Writer can be found in Chapter 7, “MUSE Network Writer Module”.

Uninterruptible Power Supply

The UPS provides battery backup for a limited time after power has gone out. It also provides power conditioning. The MUSE CV system should be systematically shutdown in the event of a power outage. Do not rely on long term use of the UPS’s battery backup.

General Fault Isolation

First Things to Ask

If the unit is not working properly, save yourself some time troubleshooting by asking yourself these basic questions.

- Is the unit turned on?
- Have there been any changes in the use, location, or environment of the equipment that could cause the failure?
- Has the unit been modified in any way, either in software or hardware?
- Is operator error the cause of the problem? Try to repeat the user's scenario exactly and compare that to the proper operation of the equipment. Check the operator's manual as necessary.

Visual Inspection

A thorough visual inspection of the equipment can save time. Small things—disconnected cables, foreign debris on circuit boards, missing hardware, loose components—can frequently cause symptoms and equipment failures that may appear to be unrelated and difficult to track.

Read the Disassembly Guidelines in the products OEM manual before you perform an internal visual inspection of the components.

Take the time to make all the recommended visual checks (refer to the following visual inspection chart) before starting any detailed troubleshooting procedures.

Table 6-1. Visual Inspection List

Area	Look for the following problems
I/O Connectors and Cables	■ Fraying or other damage ■ Bent prongs or pins ■ Cracked housing ■ Loose screws in plugs
Fuses	■ Type and rating, replace as necessary
Interface Cables	■ Excessive tension or wear ■ Loose connection ■ Strain reliefs out of place
Circuit Boards	■ Moisture, dust, or debris (top and bottom) ■ Loose or missing components ■ Burn damage or smell of over-heated components ■ Socketed components not firmly seated ■ PCB not seated properly in edge connectors ■ Solder problems: cracks, splashes on board, incomplete feedthrough, prior modifications or repairs

Table 6-1. Visual Inspection List (Continued)	
Area	**Look for the following problems**
Ground Wires/Wiring	■ Loose wires or ground strap connections ■ Faulty wiring ■ Wires pinched or in vulnerable position
Mounting Hardware	■ Loose or missing screws or other hardware, especially fasteners used as connections to ground panes on PCBs
Power Source	■ Faulty wiring, especially AC outlet ■ Circuit not dedicated to system (Power source problems can cause static discharge, resetting problems, and noise.)

7 Maintenance

Introduction 7-3
Recommended Maintenance 7-3
Inspection Report 7-3
Required Tools and Supplies 7-4

Pre-service Procedures 7-5
System Shutdown 7-5

Inspection and Cleaning 7-6
Visual Inspection 7-6
Precautions 7-6
Exterior Cleaning 7-6
Cleaning the Monitor Screen 7-6
Interior Cleaning 7-7
Cleaning the System Box Interior 7-7
Cleaning the Floppy Diskette Drive 7-7
Cleaning the DAT Drive 7-7
Cleaning the CD-ROM Drive 7-8
Cleaning the Printer 7-8
UPS Maintenance 7-8

Disassembly Guidelines 7-10
PCB Assemblies 7-10
Hardware 7-10
Opening the File Server 7-10
Opening the HP LaserJet 4000NPrinter 7-10
Opening the MUSE Network Writer 7-10

System Checkout 7-11
Checkout Procedure 7-11

Equipment Safety Tests 7-12
Introduction 7-12
Preparation for Tests 7-13
Test #1 – Ground-Wire-Leakage-to-Ground Test 7-14
Test #2 – Chassis-Leakage-to-Ground (Exposed Chassis) Test 7-15

Miscellaneous Maintenance Form 7-16

Introduction

Recommended Maintenance

A regular equipment maintenance program helps prevent unnecessary equipment and power failures and also reduces possible health hazards. This chapter contains instructions for the following recommended maintenance:

- Inspecting and cleaning the unit
- System Checkout

Inspection Report

To help you establish a systematic maintenance routine, GE Marquette Medical Systems recommends that, every six months, you perform the maintenance checks and test procedures on the "Preventive Maintenance Inspection Report," included at the end of this chapter.

NOTE

Unless you have an Equipment Maintenance Contract, GE Marquette Medical Systems does not in any manner assume the responsibility for performing the recommended maintenance procedures. The sole responsibility rests with the individual or institution using the equipment. GE Marquette Medical Systems service personnel may, at their discretion, follow the procedures provided in this manual as a guide during visits to the equipment site.

Required Tools and Supplies

In addition to a standard set of hand tools, you will need the special tools and items listed below to maintain or repair the MUSE CV system.

Table 7-1. Tools and Supplies

Item	Part Number
Leakage Current Tester 120 V (or equivalent) 240 V (or equivalent)	 MT-1216-01 MT-1216-02
Multimeter	–
Preventive Maintenance Kit	MUSEPC-PM-KIT
DAT Drive Cleaning Kit[1]	409669-001
Sony RL Drive Cleaning Kit[1]	409668-001
Sony RL Disk Cleaning Kit[1]	MOA-D51
Floppy Drive Cleaning Kit[1]	407546-001
Vacuum Cleaner[1]	VACUUM
Tape Drive Cleaning Kit	3613-901
Tape Head Demagnetizer	3613-902
Isopropyl Alcohol	–
Dust Remover (compressed air)	–
Small Tie Wraps for securing cables	–

1. These items are included in the PM Kit, pn MUSEPC-PM-KIT

Pre-service Procedures

System Shutdown

Before opening the unit for maintenance or service, be sure to shut the system down and remove power. Instructions for shutting the system down can be found in “Powering On and System Shutdown” in Chapter 2.

In addition, the OEM manuals provide information regarding proper shutdown of individual systems and devices.

Inspection and Cleaning

Visual Inspection

Perform a visual inspection daily. Turn off the unit and remove power before making an inspection or cleaning the unit.

- Check the case and display screen for cracks or other damage.
- Regularly inspect all cords and cables for fraying or other damage.
- Inspect all plugs, cables, and connectors for bent prongs or pins.
- Verify that all cords, socketed components, and connectors are securely seated.
- Inspect keys and controls for proper operation.
  - Toggle keys should not stick in one position.
  - Knobs should rotate fully in both directions.

Precautions

Turn off the unit and remove all power before inspecting or cleaning.

Do not immerse any part of the equipment in water.

Do not use organic solvents, ammonia based solutions, or abrasive cleaning agents which may damage equipment surfaces.

Do not use a cleaning solution or solvent on the cassette tapes. Doing so can cause loss of data or damage to the tape drive.

Do not use metal articles, such as a screwdriver, to clean the tape heads, or bring any magnetic material near the head assembly.

Exterior Cleaning

Clean the exterior surfaces once per month, and more frequently if needed, with a clean, soft cloth and a mild dishwashing detergent diluted in water.

- Wring the excess water from the cloth. Do not drip water or any liquid on the writer assembly, and avoid contact with open vents, plugs, or connectors.
- Dry the surfaces with a clean cloth or paper towel.

Cleaning the Monitor Screen

Use a commercial glass cleaner.

- Follow directions for use on product.
- Use non-abrasive, antistatic lint-free cloth.
- Wipe carefully and allow to dry.

Interior Cleaning

Complete any pre-service procedures prior to opening the unit or performing any interior cleaning. Clean the unit as needed, but at least once per month.

The equipment is sealed before it leaves the factory. There should be no dust buildup on the surfaces of the interior PCB assemblies and components when you receive it. However, if dust is an environmental problem, use a commercially available dust remover (compressed air). Follow the manufacturer's directions for use.

WARNING

Only qualified personnel should perform the following procedure.

M15287-30A

WARNING

Turn off power and disconnect power cord from AC power source before removing the cover.

M15287-23C

Cleaning the System Box Interior

Follow these steps to clean the system box interior.

1. Power off the workstation. See "Powering Off the Workstation" in chapter 2, "Equipment Overview" for steps to power off the workstation.
2. Detach the AC power cord before cleaning the interior of the system box.
3. Remove the system box top cover. See the OEM manual for your specific system for detailed information.
4. Clean the interior. See the "Preventative Maintenance Inspection Report" for more detail.
5. Replace the system box cover. Refer to the OEM manual for your specific system for detailed information.

Cleaning the Floppy Diskette Drive

The floppy diskette drive cleaning kit is PN 407546-001. See Storage Device Cleaning Information, PN 409623-001, for detailed information on cleaning the floppy diskette drive.

Cleaning the DAT Drive

See the OEM manual for the steps required to clean the DAT drive tape heads.

Cleaning the CD-ROM Drive

Follow these steps to clean the CD-ROM drive.

1. Open the CD-ROM drive.
2. Insert the cleaning CD-ROM, brushes down, into the drive.
3. Close the CD-ROM drive. The activity led blinks for about 10 seconds.
4. Open the CD-ROM drive.
5. Remove the cleaning CD-ROM and place it in its case.
6. Close the CD-ROM drive.

Cleaning the Printer

See the OEM manual for cleaning and adjusting instructions for the HP LaserJet 4000N printer. Maintenance instructions for the MUSE Network Writer are provided in Chapter 5, “MUSE Network Writer Module”.

UPS Maintenance

All UPS sub-systems used in MUSE CVIS systems use sealed lead acid batteries. These batteries do not require any specific preventive maintenance other than testing for functionality.

UPS Battery Care

Keep the area around the unit clean and relatively dust free. If the atmosphere is very dusty, clean the outside of the system periodically with a vacuum cleaner.

Battery Life

Battery life will vary based on ambient temperature and amount of time that the batteries are used. Maintaining an ambient temperature of 25°C (77°F) will help attain maximum battery life. Typical battery life is approximately 2 – 4 years. It is recommended that floor mount UPS systems be returned for battery replacement and testing every 3 years or sooner if the preventive maintenance tests described below fail.

The rack mounted UPS systems are designed to allow on site replacement of batteries. Contact your authorized service provider or follow the recommended procedures in the Rack Mount UPS manual.

UPS Testing

NOTE

The following test should not be run on system that is in operation. It should only be done during scheduled down time for preventive maintenance. The following test disconnects the power from the line and attempts to supply the load from batteries. If the batteries can not hold the load the system attached to the UPS will experience a power failure.

There is a self-test built into the UPS. This can be run from the front panel of the unit by depressing and holding the **Test/Alarm Reset** Button for 3 seconds. The unit will do an internal self-test. If a problem is found the unit will sound an alarm and an LED will turn on to indicate the nature of the problem.

The test can be run from the Fail Safe III software.

1. At the file server select *Start* → *Programs* → *FailSafe III* → *FailSafe III console*.
2. From the console window select *Maintenance* → *Test Hardware*.
3. At the test hardware window press the Test button.

   The system will respond with *maintenance is running*. After about 42 seconds the system will respond with a *maintenance completed OK* message.
4. Close the *FailSafe III* window.

It is possible that if the system has gone for a long period of time without loss of input power the batteries could be in an unrecognized failed condition. It is also possible that the built in test may pass. During scheduled down time, the most thorough test is to disconnect the input power from the UPS with the full load applied to the system. The unit should maintain power to the system for the recommended amount of backup time based on the equipment load. Typically better than 5 minutes.

Disassembly Guidelines

PCB Assemblies

Observe the following guidelines when working on all PCB assemblies:

- Take precautions against electrostatic discharge damage.
- Handle all PCB assemblies by their edges.
- Use a heatsink when soldering any phototransistors, photodiodes, or optical isolators.
- Repair breaks in PCB assembly tracks by bridging with wire from pad to pad. Do not lay solder across the breaks. (The heat from the soldering iron may cause the track to detach from the PCB assembly.)
- After soldering, clean excess flux from the PCB assembly.

Hardware

- Before disassembly, note the positions of any wires or looms (cables), marking them if necessary to ensure that they are replaced correctly.
- Save and set aside all hardware for re-assembly.

Opening the File Server

See the OEM manual for your specific system for the steps to open, disassemble, and reassemble your system.

WARNING

Turn off power and disconnect power cord from AC power source before removing the cover.

M15287-23C

Opening the HP LaserJet 4000NPrinter

Instructions on opening the HP printer, adding RAM, and other maintenance procedures can be found in the OEM manual.

Opening the MUSE Network Writer

See Chapter 7, “MUSE Network Writer Module”, for instructions on opening the printer.

System Checkout

Checkout Procedure

Perform the following for all applicable options. Use this manual and the “MUSE CV information system operator’s manual” (PN 419931-001) for reference.

NOTE

This procedure should be completed after initial installation, routine maintenance, and field upgrades or modifications.

1. Node Initialization - Power up all nodes and ensure each initializes, error free, and you can log in.
2. Diskette Acquisition - Acquire test ECGs via electrocardiograph diskettes and ensure they plot according to report distribution.
3. Phone Acquisition - Acquire test ECGs via remote electrocardiograph modems and ensure they plot according to report distribution.
4. Local Acquisition - Acquire test ECGs via the front acquisition port and ensure they plot according to report distribution.
5. Holter - Locally transmit data from the Holter to the MUSE.
6. TRAM Module - Test that data is successfully flowing from the TRAM to the MUSE.
7. MAC LAB - Test that data can be sent from the MAC LAB to the MUSE.
8. SDLC - Acquire test ECGs via remote SDLC modems.
9. CSI - Acquire test ECGs via remote CSI modems.
10. RSS - Contact Tech Support to ensure remote logon is possible.
11. Remote Query - Test CSI modem connections if system has Remote Query.
12. Edit - View and edit an ECG from the *Edit List*.
13. Writer/Printers - Test writers to ensure they plot. Check for burned out dots, especially in the bar code region.
14. FAX - FAX a record to test fax modems.
15. On-line Archives - If the system has on-line archive drives, ensure that backup tapes are up to date.
16. Backups - Perform a manual normal daily backup . Check that all tapes are being successfully used. Replace tapes that are past their intended life span (customer should store old tapes for safe keeping).

Equipment Safety Tests

Introduction

The following paragraphs contain equipment safety tests to ensure that the MUSE CV system poses no electrical health hazards. It is suggested that the equipment safety tests be performed every 6 months and every time a circuit board/assembly is removed and replaced. The following table lists the tests.

Equipment necessary to perform these equipment safety tests includes a 110-volt leakage current tester, pn MT-1216-01AAMI, (referred to as tester) and a digital multimeter. Note that for 220-volt use tester, PN MT-1216-02AAMI.

NOTE

Failure to implement a satisfactory maintenance schedule may cause undue equipment failure and possible health hazards. Unless an Equipment Maintenance Contract exists, GE Marquette Medical Systems does not in any manner assume the responsibility for performing the recommended maintenance procedures. The sole responsibility rests with the individual or institution using the equipment. GE Marquette Medical Systems service personnel may, at their discretion, use this procedure as a helpful guide during visits to the equipment site.

Table 7-2. Equipment Safety Tests

Test #	Applies to	Tools Required
1	File servers, acquisition servers/processing stations, and workstation computers that have the MAC 6/MAC PC Local Acquisition Port	110V ac MT-1216-01AAM 220 V ac MT-1216-02AAMI (or equivalent) and DVOM
2	Same as above.	Same as above.

Preparation for Tests

NOTE

The following procedure checks for proper wiring of the power receptacle. If the proper indications of step A (normal polarity and ground) are not obtained, the following procedures will be ambiguous. Do not proceed until a properly wired outlet is found.

This procedure verifies that a properly wired outlet is used to furnish power to the MUSE CV system. Note also that Chapter 6, “Troubleshooting” contains an additional and important power source verification procedure that should also be done.

- Connect the appropriate leakage tester to the power outlet.
- Insure that the GND switch on the leakage tester is in the down (closed) position.
- Check the O, K, and R indicators for the condition according to the table below. Normal polarity and ground is the desired and safe condition.

Table 7-3. Power Receptacle Wiring Check

Step	Indicator			Condition
	O	K	R	
A	On	On	Off	Normal polarity and ground
B	Off	On	On	Reverse polarity
C	Off	On	Off	No ground
D	On	Off	On	No neutral
E	Off	Off	On	No neutral/reverse polarity.
F	Off	Off	Off	No power.

Test #1 – Ground-Wire-Leakage-to-Ground Test

NOTE

This diagram shows only a representation of how a typical leakage current tester functions. Follow the instructions provided with your leakage tester.

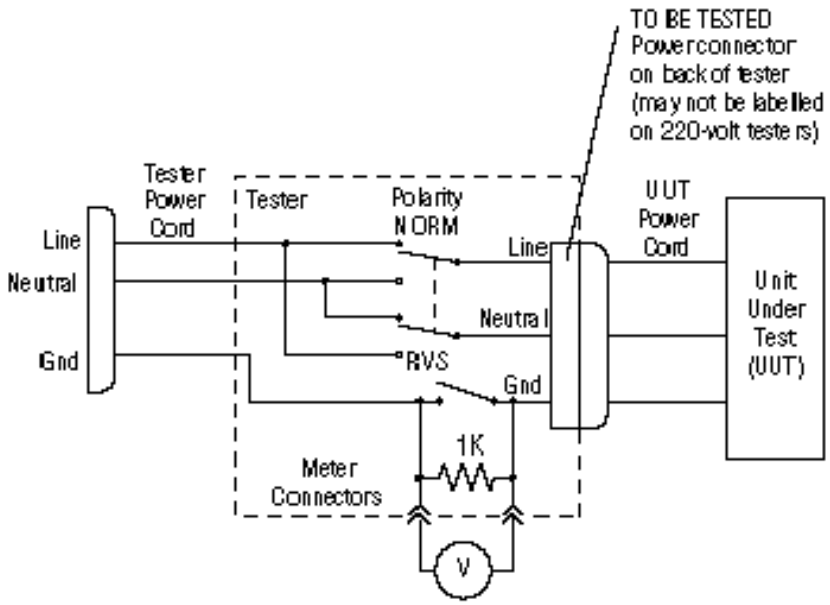

M13052-1C

Test #2 – Chassis-Leakage-to-Ground (Exposed Chassis) Test

\

NOTE

This diagram shows only a representation of how a typical leakage current tester functions. Follow the instructions provided with your leakage tester.

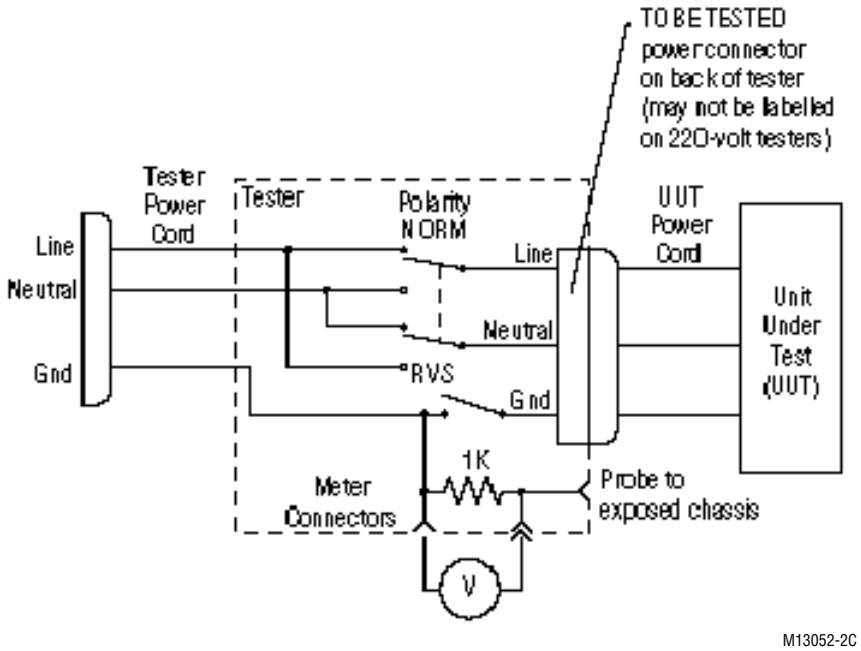

Miscellaneous Maintenance Form

GE Marquette Medical Systems recommends that every six months you perform the maintenance checks and test procedures on the "Preventive Maintenance Inspection Report" (see following pages). These maintenance procedures can be performed more often if indicated.

MUSE®
Preventive Maintenance Inspection Report

Customer_____ Customer Number _____ Date _____

FE _____ FE ID _____ Call Number _____

Equipment Serial Number _____ MUSE Software Revision _____

Configuration

Number of Servers _____ Number of Nodes _____

Network Type _____ HIS (type) _____

Tools Required

1. Standard hand tools (p.n. N/A)
2. Multimeter (p.n. N/A)
3. Leakage Current Tester (p.n. MT-1216)
4. Field Service Manual (p.n. 405355-001)-not required, reference only
5. Operator's Manual (p.n. 417087-001)-not required, reference only
6. Isopropyl alcohol (p.n. N/A)
7. PM Kit (p.n. MUSEPC-PM-KIT)
8. *DAT Drive Cleaning Kit (p.n. 409669-001)
9. *Sony RL Drive Cleaning Kit (p.n. 409668-001)
10. *SONY RL Disk Cleaning Kit (p.n. MOA-D51)
11. *Floppy Drive Cleaning Kit (p.n. 407546-001)
12. *Vacuum Cleaner (p.n. VACUUM)

These parts are included in the PM Kit (p.n. MUSEPC-PM-KIT)

Visual Inspection

Inspect the following for excess wear and/or any visual signs of damage.

1._____ Network Cabling (broken insulation)
2._____ Network Cabling (proper stress relief)
3._____ AC power Cord (s)
4._____ System Furniture
5._____ Fans on all notes
6._____ Internal & external system cables and connectors
7._____ Console printer ribbon
8._____ Laser printer EP cartridge

Cleaning

(Refer to the Field Service Manual)

1._____ Clean all internals of dust
2._____ Clean all keyboards
3._____ Clean all fans and air intakes
4._____ Clean all floppy drives
5._____ Clean all printer and writer platens
6._____ Clean all mouse balls and contacts
7._____ Clean all barcode readers
8._____ Clean Optical drives and disks *
9._____ Clean DAT drives *
10._____ Clean external surfaces

Note: See instruction set included with MUSEPC-PM-KIT.

Calibration

There is no calibration required on the MUSE system.

Electrical Safety Checks

Perform these checkouts for each node.

Node Number: ☐

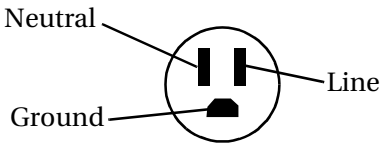

1. AC Line Voltage Checkout

_____ Line to neutral = 120V
_____ Line to ground = 120V
_____ Neutral to ground < 3V

After the outlet passes the above tests, check the neutral-ground loop resistance test.

_____ Neutral to ground < 2W

2. Leakage Test

Note: The following voltages apply to 120/240 VAC for MUSE Personal Computers.

	Open		**Closed**	
	Normal	Reversed	Normal	Reversed
Ground wire leakage to ground (3500 µA max.)	_____uA	_____uA	NA	NA
Chassis leakage to ground (3500 µA max.) (exposed chassis)	_____uA	_____uA	_____uA	_____uA

3. Resistance Measurements

Ground pin to chassis _____ < 100 mΩ

Node Number: ☐

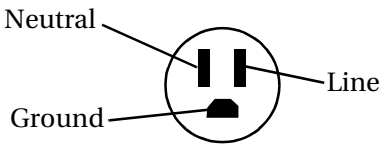

1. AC Line Voltage Checkout

_____ Line to neutral = 120V
_____ Line to ground = 120V
_____ Neutral to ground < 3V

After the outlet passes the above tests, check the neutral-ground loop resistance test.

_____ Neutral to ground < 2W

2. Leakage Test

Note: The following voltages apply to 120/240 VAC for MUSE Personal Computers.

	Open		**Closed**	
	Normal	Reversed	Normal	Reversed
Ground wire leakage to ground (3500 µA max.)	_____uA	_____uA	NA	NA
Chassis leakage to ground (3500 µA max.) (exposed chassis)	_____uA	_____uA	_____uA	_____uA

3. Resistance Measurements

Ground pin to chassis _____ < 100 mΩ

Electrical Safety Checks

Perform these checkouts for each node.

Node Number: ☐

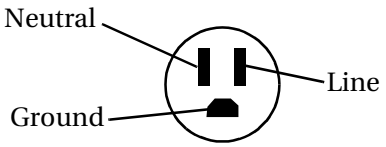

1. AC Line Voltage Checkout

_____ Line to neutral = 120V
_____ Line to ground = 120V
_____ Neutral to ground < 3V

After the outlet passes the above tests, check the neutral-ground loop resistance test.

_____ Neutral to ground < 2W

2. Leakage Test

Note: The following voltages apply to 120/240 VAC for MUSE Personal Computers.

	Open		**Closed**	
	Normal	Reversed	Normal	Reversed
Ground wire leakage to ground (3500 µA max.)	_____uA	_____uA	NA	NA
Chassis leakage to ground (3500 µA max.) (exposed chassis)	_____uA	_____uA	_____uA	_____uA

3. Resistance Measurements

Ground pin to chassis _____ < 100 mΩ

Diagnostic Tests

The following tests for and, if required, corrects software viruses and performs disk drive optimization:
The tests, Anti Virus, Scan Disk, and Defragment, may take up to 1 hour per node.

1. Before proceeding, verify a good recent backup exists.
2. Shutdown and reboot the system into DOS mode.
3. At the DOS prompt, type **CD\DOS <cr>** .
4. Now scan for viruses, type **MSAV /L /P /R <cr>** *Report to Tech Support if any viruses are detected.
5. After virus scanning, check the disks by typing **SCANDISK <cr>** *Errors should be checked by Tech Support.
6. After scan disk is complete, run the optimizer by typing **DEFRAG <cr>**

Checkout Procedure

Use the Field Service Manual and User Manual for reference. Perform the following for all applicable options.

a.	❑ **NODE INITIALIZATION**	Power up all nodes and ensure each initializes, error free, and you can log in.
b.	❑ **DISKETTE ACQUISITION**	Acquire test ECG's via cart diskettes and ensure they plot according to report distribution.
c.	❑ **PHONE ACQUISITION**	Acquire test ECG's via remote cart modems and ensure they plot according to report distribution.
d.	❑ **LOCAL ACQUISITION**	Acquire test ECG's via the front acq. port and ensure they plot according to report distribution.
e.	❑ **HOLTER**	Locally transmit data from the Holter to the MUSE.
f.	❑ **TRAM MODULE**	Test that data is successfully flowing from the TRAM to the MUSE.
g.	❑ **MAC-LAB**	Test that data can be sent from the MAC LAB to the MUSE.
h.	❑ **SDLC**	Acquire test ECG's via remote SDLC modems.

i.	❑ CSI	Acquire test ECG's via remote CSI modems.
j.	❑ RSS	Contact Tech Support to ensure remote logon is possible.
k.	❑ REMOTE QUERY	Test CSI modem connections if system has Remote Query.
l.	❑ EDIT	View and edit an ECG from the Edit List.
m.	❑ WRITER/PRINTERS	Test writers to ensure they plot. Check for burned out dots, especially in the bar code region.
n.	❑ REMOTE WORKSTATIONS	Verify the Remote Workstations connection to the Host MUSE.
o.	❑ FAX	FAX a record to test fax modems.
p.	❑ R/L ARCHIVES	If the system has an optical drive, retrieve an ECG from each disk. (ex. 16A, 16B and 16C)
q.	❑ ON-LINE ARCHIVES	If the system has on-line archive drives, ensure that backup tapes are up-to-date.
r.	❑ BACKUPS	Perform a non-scheduled complete backup. Check that all tapes are being successfully used. Replace tapes that are past their intended life span (customer should store old tapes for safe keeping).

Environment

			Y	**N**
Room Temperature:	_____°F	Static problems (ESD):	❑	❑
Humidity:	_____	Excessive Dust:	❑	❑
Node(s) on UPS:	_____			

Comments on any other environmental conditions that may effect operation or reliability (static, temp., a.c. power, etc...)

_____

This report to be filed at customer site

Briefly describe all repairs/adjustments made and list all parts replaced:

_____

_____

_____

Additional Comments:

_____

_____

_____

Customer Signature: _____ Date:_____

FE Signature: _____ Date:_____

FRU Checkout Procedure

FRU Description	Tools Required	Visual Inspection	Cleaning	Calibration	Electrical Safety Tests	Checkout Procedure
HARDWARE						
Monitors	1, 2, 3	3, 6	10	N/A	ALL	a, b, l
Keyboard, Mouse	1, 2, 3	3, 6	6, 10	N/A	ALL	a, b, l
Bar Code Reader	1, 2, 3	3, 6	7, 10	N/A	ALL	a, b, l
PC Box Assembly	1, 2, 3, 12	3, 5, 6	1, 3, 4, 8, 9, 10	N/A	ALL	ALL
PC Box Internal PCB's	1, 2, 3, 12	3, 5, 6	1, 3, 4	N/A	ALL	ALL
Server disk drives	1, 2, 3, 12	5, 6	1, 3	N/A	ALL	ALL
Floppy drives	1, 2, 3, 11, 12	5, 6	1, 3, 4	N/A	ALL	a, b
Power Supplies	1, 2, 3, 12	3, 5, 6	1, 3	N/A	ALL	a, b
MEI Writer Assembly	1, 2, 3	3, 5, 6	3, 5, 10	N/A	ALL	a, b, m
MEI Writer components	1, 2, 3, 12	3, 6	1, 3, 5, 10	N/A	ALL	a, b, m
External Modems	1, 2, 3	3, 6	10	N/A	ALL	a, b, i, j, k, n, o
Internal Modems	1, 2, 3, 12	5, 6	1, 3	N/A	ALL	a, b, i, j, k, n, o
Printers (laser, dot matrix)	1, 2, 3	3, 5, 6, 7, 8	3, 5, 10	N/A	ALL	a, b, m
Sony R/L Drives	1, 2, 3, 10	5, 6	1, 3, 8	N/A	ALL	a, b, p, q, r
DAT Drive	1, 2, 3, 8, 12	5, 6	1, 3, 9	N/A	ALL	a, b, q, r
Non-Listed FRU's	Perform complete PM					
No Parts Replaced	none	ALL	none	N/A	none	a, b, l, any applicable
SOFTWARE						
Updates/Upgrades	Perform complete PM					

8 MUSE Network Writer Module

Introduction **8-3**

Theory **8-4**
- Introduction 8-4
- Power Supply Assembly 8-5
- Network Writer Interface PCB Assembly 8-5
  - Different Versions/Compatibility 8-5
- Motor Control PCB Assembly 8-5
  - Thermal Print Head Resistance 8-5
  - Internal/External Memory 8-5
- LED PCB Assembly 8-6
- Writer Door Optic Cable Assembly 8-6
- Thermal Writer Assembly 8-7
  - Thermal Print Head 8-7
  - Motor with Tach Assembly 8-7
  - Optic Cable Assembly 8-7

Controls, Connectors, and Indicators **8-9**
- Front/Top 8-9
- Back 8-9

Cleaning **8-10**
- Cleaning the Thermal Print Head 8-10

Adjustments **8-11**
- Thermal Writer Adjustment Procedures 8-11
  - Paper Position Adjustment 8-11
  - Thermal Paper Tracking 8-11
  - Thermal Paper Tracking Adjustment 8-12
  - Thermal Print Head Pressure Adjustment 8-13
  - Optic Cable Assembly (Queuing Sensor) Adjustment 8-16
  - Writer Door Optic Cable Assembly Adjustment 8-17
- Jumper/Switch Settings 8-18
  - Motor Control PCB Assembly 8-18
  - Network Writer/Local Acquisition Port Interface PCB Assembly 8-18

Known Problems **8-19**
Static 8-19
Failure to Load Writer DRAM During Boot 8-19

Selecting the Defective Assembly **8-20**
Writer Diagnostics 8-20
Writer Tests 8-20
MAC 6/MAC PC Local Acquisition Port Tests 8-21
Removing/Installing the Top Cover 8-24
Installation 8-25
Removing/Installing the Writer Door Optic Cable Assembly 8-26
Removal 8-26
Installation 8-26
Removing/Installing the LED PCB Assembly 8-27
Removal 8-27
Installation 8-27
Removing/Installing the Writer/Tray Assembly 8-28
Removal 8-28
Installation 8-28
Removing/Installing the Thermal Writer Assembly 8-29
Removal 8-29
Installation 8-29
Disassembly/Assembly 8-30
Exploded View 8-30
Removing/Installing the Thermal Print Head 8-31
Removing/Installing the Optic Cable Assembly (Queuing Sensor) ... 8-33
Removing/Installing the Power Supply Assembly 8-34
Removal 8-34
Installation 8-34
Removing/Installing the Motor Control PCB Assembly 8-35
Removal 8-35
Installation 8-35

Introduction

The MUSE Network Writer module is made up of the MUSE Network Writer and the network writer interface pcb assembly. The MUSE Network Writer is a thermal printer used to print ECG reports and other information on thermally-sensitive paper. It communicates with a client computer using the network writer interface pcb assembly, which gets installed in the computer.

The goal of this section is to find the defective assembly in the MUSE Network Writer module (including the network writer interface), replace it and verify that the equipment is functioning properly once again.

This section is made up of various subsections:

- Theory, which provides an assembly level theory discussion on this module,
- Controls, Connectors, and Indicators,
- Cleaning,
- Adjustments,
- Selecting the Defective Assembly, and
- Replacing the Defective Assembly.

Theory

Introduction

Following is a block diagram of the MUSE Network Writer module. Remember that the network writer interface pcb assembly is not really a part of the MUSE Network Writer. It is installed in the client computer, and allows communication between the computer and writer.

The MUSE Network writer module consists of the following field-replaceable assemblies:

- power supply assembly
- network writer/local acquisition port interface pcb assembly
- motor control pcb assembly
- LED pcb assembly
- writer door optical cable assembly
- thermal writer assembly (made up of the following)
  - thermal print head
  - motor with tach assembly
  - optic cable assembly

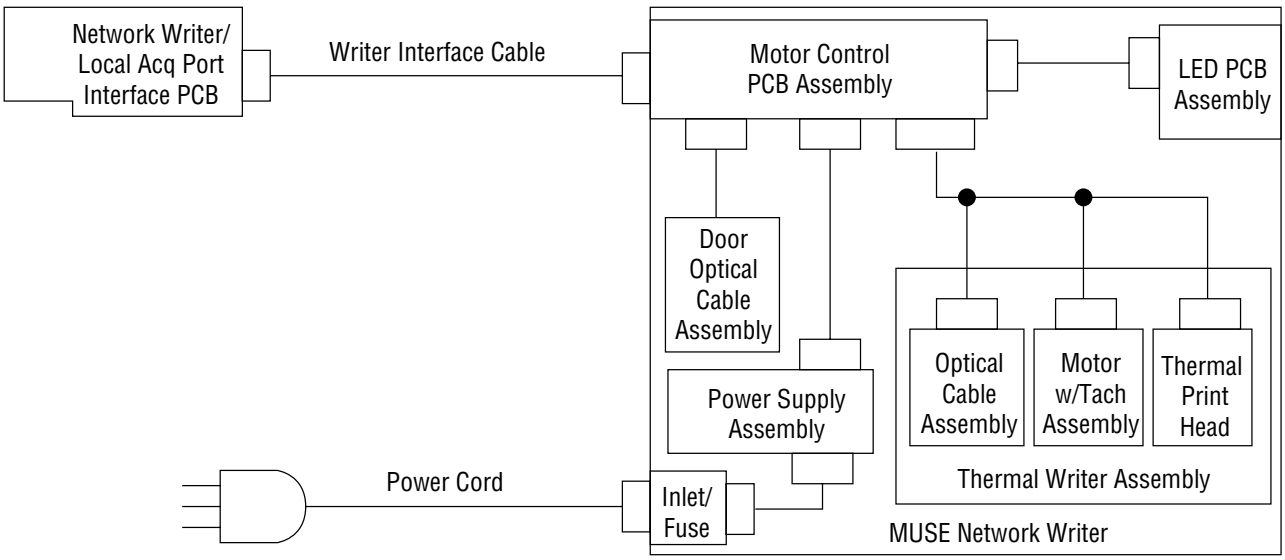

Base Figure Number-126B

Power Supply Assembly

The power supply in the MUSE Network Writer supplies 15 Vdc to the circuits in the writer. Nominal output current is 7.3 A. Input power can be either 90-132 Vac or 180-264 Vac.

Network Writer Interface PCB Assembly

The network writer interface pcb assembly interfaces the MUSE Network Writer with the client computer. It uses a 34010 graphics controller and shared RAM to get data from the motherboard in the MUSE Network host computer (file server or client computer).

The host computer writes parallel graphics data to the video memory on the network writer interface, and tells the graphics processor on the network writer/local acquisition port interface that there is data to be printed. The graphics processor then accesses the data in the shared video memory and converts the data to a serial stream. The data is sent to the motor control pcb assembly in the MUSE Network Writer via the 37-pin connector.

Different Versions/Compatibility

There are several versions of the network writer interface pcb assembly. The original -001 version has a lot of hand modifications that were fixed with the -002 version. More memory was added to create the -003 version. The -004 version supports the GE Marquette Medical Systems Lasergraph and other HP compatible laser printers at PCL5 (Printer Control Language level 5).

Motor Control PCB Assembly

The motor control pcb assembly receives a serial stream of thermal print head data from the network writer/local acquisition port interface pcb assembly. It generates the specific signals that the thermal writer needs to print, and receives feedback from optical sensors on the paper queuing and writer door optical sensors.

The motor control pcb assembly has one 4-position DIP switch described in the following paragraphs.

Thermal Print Head Resistance

To maintain proper printing darkness, the writer must compensate for normal production tolerances in thermal print head resistance. The overall range of thermal print head resistances is from 520 Ω to 780 Ω. This range is divided into 8 segments. Each segment corresponds to a unique setting of stations 1-3 on switch SW1.

A table of thermal print head resistances and their corresponding switch settings is provided in“Adjustments” later in this section.

Remember to check/change SW1 whenever the print head or writer assembly is replaced. If the resistance is set improperly, printing may be too light or too dark. Improper print head resistance could cause traces to fade or the print head to fail prematurely.

Internal/External Memory

The 34010 graphics controller uses external ROM. This corresponds to DIP switch SW1 station 4 being OFF. This switch should never be changed.

LED PCB Assembly

The LED pcb assembly has 3 LEDs: writer fault, out of paper, and power on/printer busy. The writer fault LED is either red or amber. Red was used on early units. The color was changed to amber to satisfy a UL requirement. The writer fault LED is lit whenever the paper access door is open. The amber out-of-paper LED is lit when the optic queue sensor detects the end of the thermal paper (or a very large hole in the paper). The green power on/printer busy LED is on solid whenever power to the unit is turned on. It flashes whenever something is being printed. Control for all of these LEDs comes from the motor control pcb assembly.

Writer Door Optic Cable Assembly

The writer door optic cable assembly is mounted next to the paper access door. Whenever the door is open, the sensor sends a signal to the motor control pcb assembly, which stops printing and turns on the writer fault LED on the LED pcb assembly.

The writer door optic cable assembly senses whether or not the paper access door is open. It does this by shining a light at a downward protrusion on the underside of the door. If the door is closed, the light is reflected back. If the door is open, there is no reflected light.

Thermal Writer Assembly

The thermal writer assembly receives motor and thermal print head information from the motor control pcb assembly, and actually does the printing. The thermal writer assembly is made up of three subassemblies described following.

Thermal Print Head

The thermal print head is responsible for creating the dots on the thermal paper that make up the print out of the writer. This is done by sending the thermal print one vertical column of dots to the thermal print head. Each dot has 1 corresponding element that can be turned either on or off (on=dot or off=no dot) as the paper goes by. This vertical row is then written to the print head by heating up the elements that were turned “on” to about 170° F.

The thermal print head works as follows. First, serial data is clocked into shift registers by a clock signal from the motor control pcb assembly. When the shift registers are full, the data is loaded into latches. Finally, burn signals apply the data to transistors connected to resistive elements. Depending upon the data originally clocked into the shift registers, the thermal print head either prints a dot or no dot.

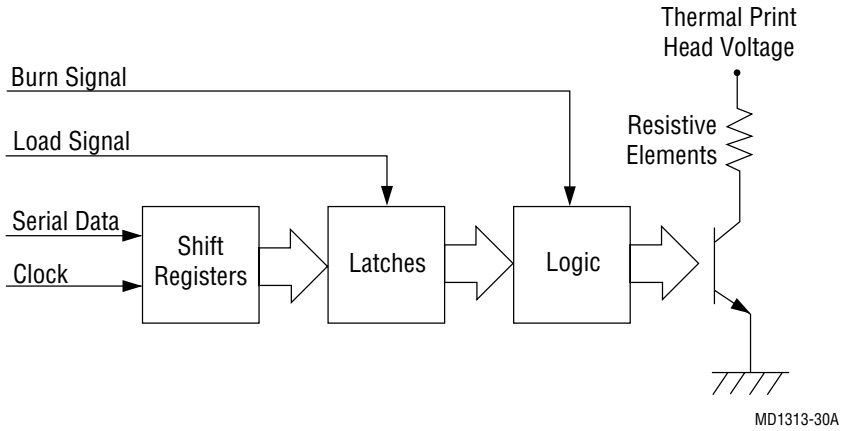

Motor with Tach Assembly

The motor with tach assembly pulls the thermal paper past the thermal print head. The thermal print head then heats up various element dots that burn a dot onto the paper as it passes by. The motor with tach assembly can move the paper at four paper speeds which are selectable: 5, 12.5, 25, and 50 mm/seconds. The motor with tach assembly must move the paper at a consistent and smooth speed to maintain the vital timing relationships of the ECG traces on the paper.

Optic Cable Assembly

The optic cable assembly senses the presence or absence of paper. It does this by shining a light at the paper, if there is paper the light is reflected back. If no paper is present, there is no reflected light. This ability is used in the following ways by the writer:

- Before the writer prints out a report or ECG strip, it needs to know whether there is paper installed. This is also checked during printing.
- The thermal paper has queue holes that the writer uses to queue to the beginning of a sheet of the Z-fold paper. The writer backs the paper up small distance until a queue hole is sensed and

then proceeds with a report print out (like a 12 lead). When backing the paper up, if a queue hole is not sensed in a short period of time, the writer then proceeds forward to the next queue hole to begin printing. This process is used to print each report in a sequential manner, wasting less paper. When printing a rhythm strip, no queuing is done, the print out begins immediately.

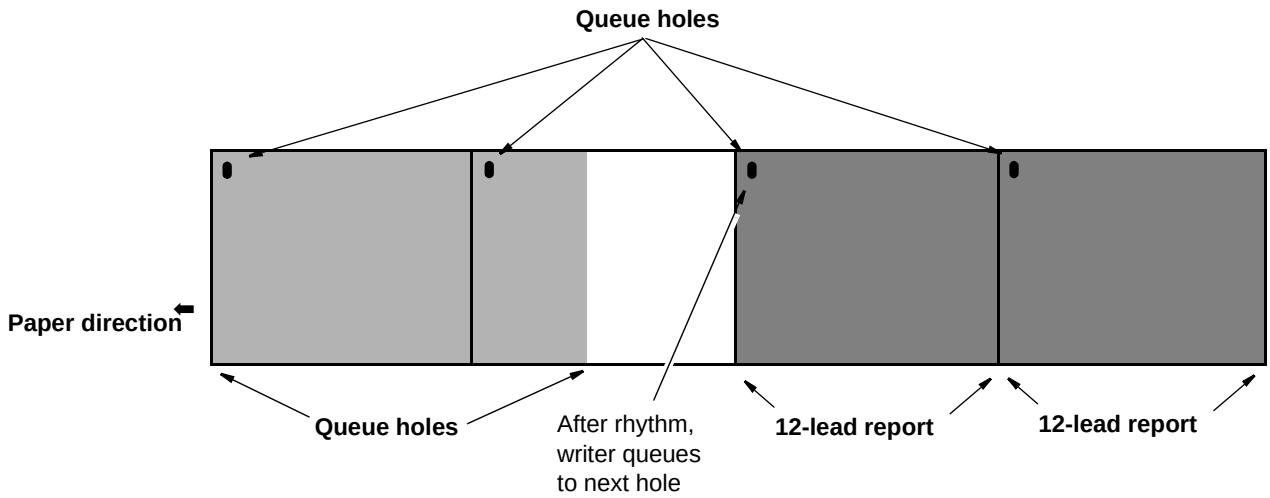

Controls, Connectors, and Indicators

Front/Top

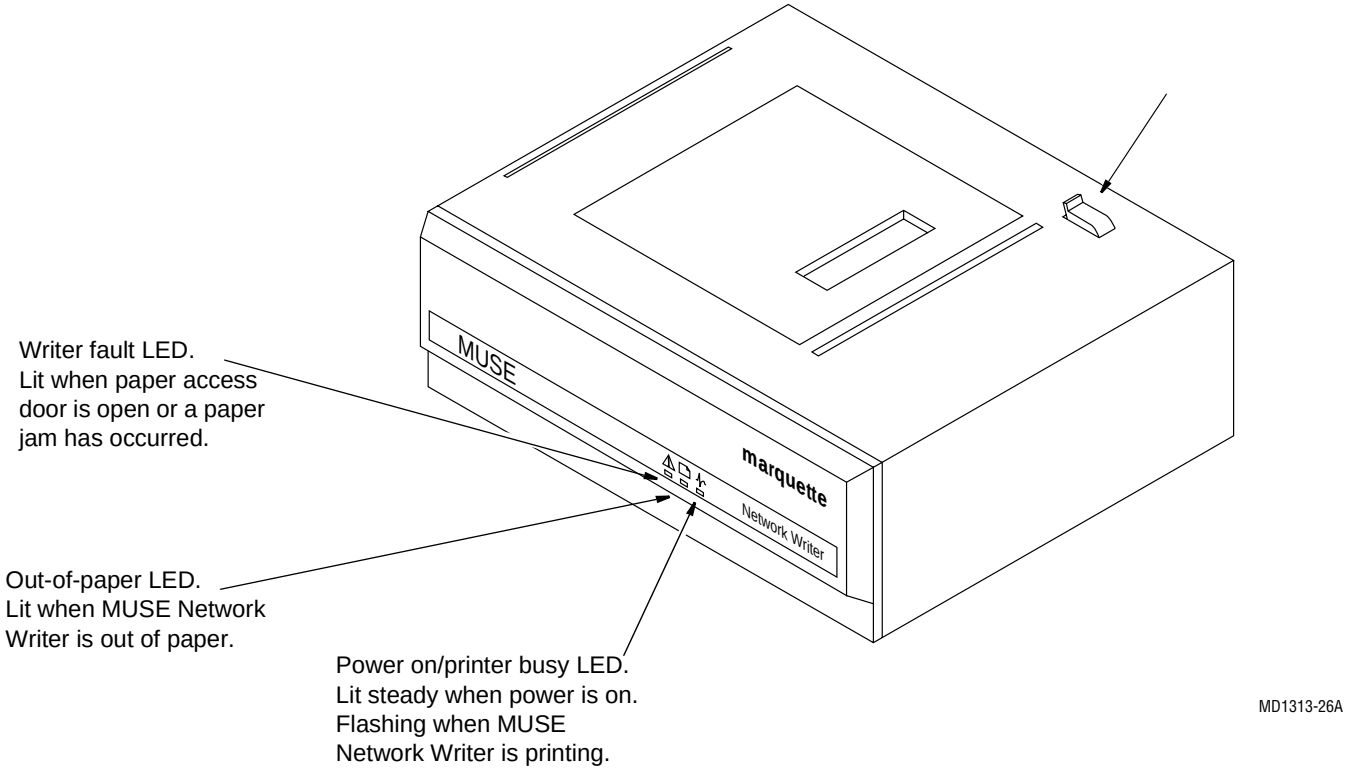

Back

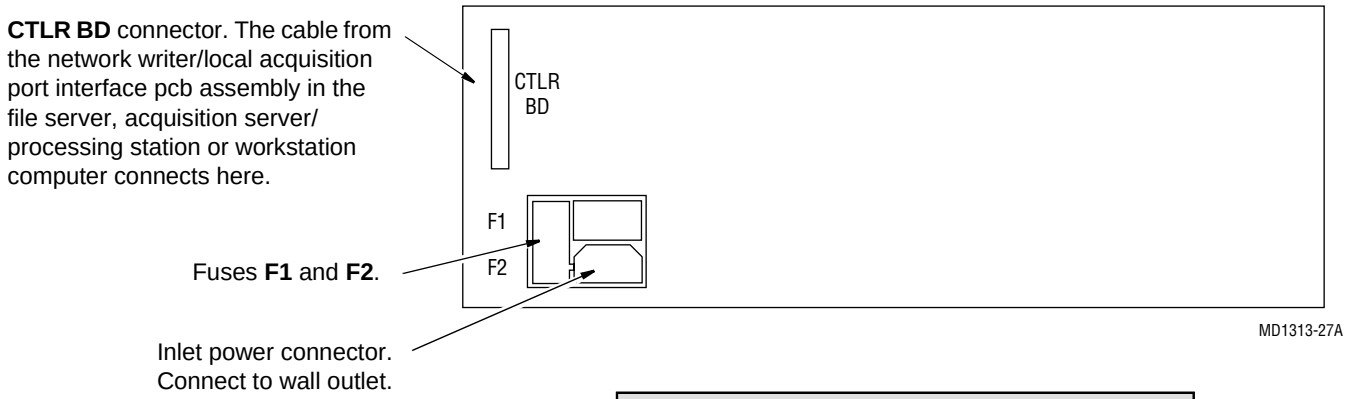

⚠ WARNING

Replace only with the same type and rating of fuse.

M15287-2B

Cleaning

Cleaning the Thermal Print Head

The thermal print head should be cleaned every three months. With heavy use, or if other than GE Marquette thermal paper is used, there may be a buildup of thermal paper coating on the thermal print head that degrades print head performance (light or uneven printing).

If this is happening, clean the thermal print head more often. To clean the thermal print head, you will need a nonwoven, nonabrasive cleaning material, such as a Techni-Cloth, and rubbing alcohol. Do not use paper toweling; it will scratch the thermal print head.

1. Lift the paper access door.
2. Move the paper release lever toward right side of unit.
3. Remove the thermal paper from the paper compartment.
4. Insert the cleaning material into the paper guide and feed through until it appears on top of the paper roller.
5. Dampen the cleaning material with rubbing alcohol. Do not saturate the cloth!
6. Move the paper release lever to the left, i.e. back toward the inside of the unit. Manually pull the cleaning material back and forth through the thermal writer several times to clean the thermal print head.
7. Remove the cleaning material. Allow the cleaning solution on the thermal print head to evaporate.
8. Replace the thermal paper.
9. Move the paper release lever to the engage position.
10. Close the cover to the paper compartment.

Adjustments

Thermal Writer Adjustment Procedures

The chart paper may fail to advance properly for various reasons. There may be a problem with the way the paper is positioned in the paper compartment, with the position of the queuing sensor or with the paper tracking assembly.

Make sure the paper is properly installed in the paper compartment before you adjust the paper tracking assemblies. (If you need instructions for installing paper, see the operator's documentation that came with the equipment.) Both improperly installed paper and improper pressure can cause the paper to track to one side or the other.

NOTE

Do not adjust the thermal print head spring plunger screws to correct a paper tracking problem.

NOTE

If the ECG waveforms are not properly aligned on the chart paper when printing starts, the queuing sensor may need to be adjusted. See "Optic Cable Assembly (Queuing Sensor) Adjustment" in this section.

Paper Position Adjustment

If the chart paper is advancing but pulling to one side, first check that the paper is properly positioned.

1. Move the paper release lever to the right to disengage the thermal print head from the paper roller.
2. Open the paper compartment door.
3. Try shifting the paper from side to side. The paper should move freely with the thermal print head disengaged.

Thermal Paper Tracking

The thermal paper may fail to advance properly due to a problem with paper position in the paper compartment, the thermal paper tracking assembly, the position of the queuing sensor, or uneven printhead pressure.

- If the thermal paper is advancing but pulling to one side, check that the thermal paper is properly positioned.
- If the ECG waveforms are not properly aligned on the thermal paper when printing starts, the adjustment screws may need adjustment.
- If the paper is tracking to one side, wrinkling or tearing, the paper may be improperly positioned or the thermal printhead

pressure is uneven. Check the paper position using the steps below. If the paper is positioned properly, see “Thermal Paper Tracking Adjustment”.

Check that the thermal paper is properly positioned.

1. Press the thermal paper release push button to disengage the thermal print head from the thermal paper capstan/roller.
2. Open the thermal paper compartment door.
3. The top and bottom edges of the thermal paper should move freely and not press tightly against the paper tray.

Thermal Paper Tracking Adjustment

NOTE

If the paper is tracking to the top, adjust the pressure spring on the bottom. Only adjust one spring.

1. Insert a small phillips head screw driver through the oval hole on the pressure spring and turn the adjustment screw

counterclockwise until the screw just touches the pressure spring.

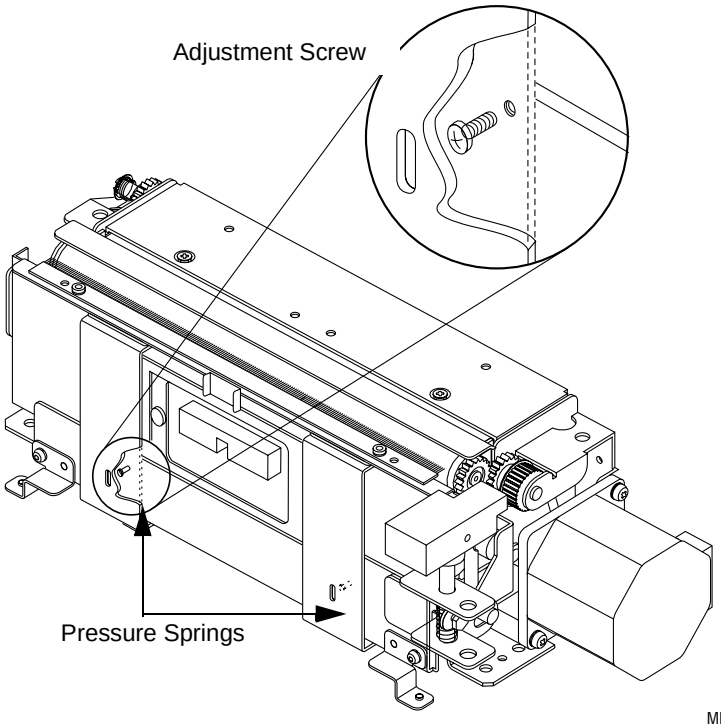

MD1021-303

NOTE

Small adjustments reduce the pressure on the printhead. Typically, no more than 1/4 turn is needed on only one spring.

2. While running a rhythm strip or 12 lead report, carefully adjust the screw counterclockwise until the paper tracks correctly.
3. Perform the Roller Test (see “Diagnostic Tests” in chapter 4, “Troubleshooting”) to make sure the printhead pressure is uniform across the entire length of the paper.
4. Gently tighten (clockwise) the other adjustment screw (the one NOT adjusted in step 1) until it meets the frame.

Thermal Print Head Pressure Adjustment

Printing that is not uniformly dark across the width of the paper indicates that the thermal print head pressure needs adjustment. This adjustment may also need to be done after replacing the thermal print head.

1. Remove the MUSE Network Writer cover. See “Removing/ Installing the Top Cover” if you need to.
2. Remove the spring plunger screws from the thermal writer assembly.

> **NOTE**
>
> The thermal print head is static sensitive. Proper grounding is required when handling the thermal print head.

3. Apply the Vibra-tite to the area of the male screw threads that will be in the writer chassis when assembled (threads should be about half full).

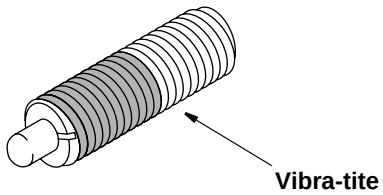

MD1313-28A

4. Allow the Vibra-tite to cure for about 10 minutes.
5. Insert the screw into the writer chassis.
6. Adjust the screws for proper pressure. Use the MT-3434 plunger screw feeler gauge.
7. Screw in the screws until the amount of each screw that protrudes from the writer chassis is equal to the depth of the notch of the feeler gauge.

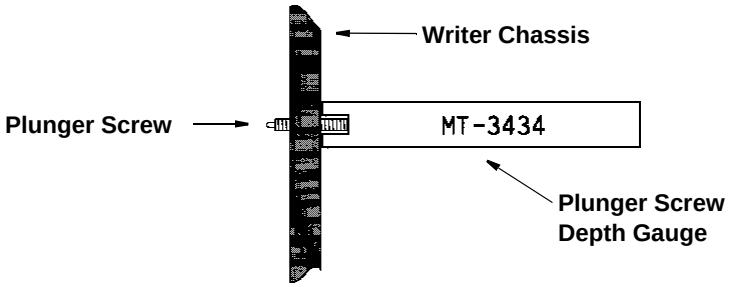

MD1313-29A

If the feeler gauge is not available, the depth protruding from the chassis can be measured. The measurement is 0.53 inches.

Verify that the thermal writer module is operating properly.

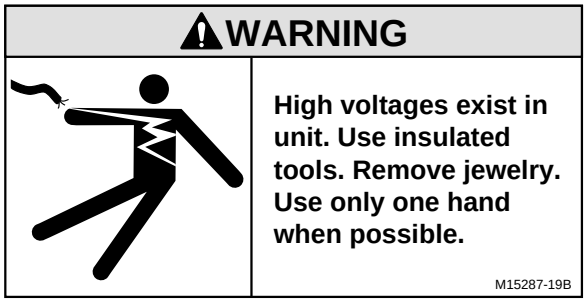

8. Turn on the writer and print a couple of sample reports and look at the output.
9. Examine the tracings to verify that the writer is operating properly.
   - The paper should queue between each report.
   - If the thermal print head pressure is correct, the printing will be uniform in darkness across the width of the paper.
   - A burned-out print head element will cause gaps in the output that line up horizontally.
   - Uneven paper speed will cause the output to be wavy in spots.
10. If the writer is operating properly, replace the top cover.

Optic Cable Assembly (Queuing Sensor) Adjustment

If the ECG waveforms are not aligned on the thermal paper properly, the queuing sensor may need to be adjusted.

1. Remove the top cover. See “Removing/Installing the Top Cover”.
2. Remove the thermal paper from the paper compartment. With the thermal paper removed, the queuing sensor mounting bracket is visible in the front of the paper compartment.
3. Blow any dust away from the optic sensor. Sometimes dust buildup can cause the sensor to not work properly. If there was a lot of dust, try printing a report to see if the problem is fixed before continuing with the next step.

WARNING

High voltages exist in unit. Use insulated tools. Remove jewelry. Use only one hand when possible.

M15287-19B

4. The queuing sensor is mounted to a bracket and positioned directly under the capstan roller. Back out the screws holding the queuing sensor in place so the queuing sensor can be moved up or down.
5. Adjust the position of the queuing sensor in small increments (1/16- to 1/8-inch). Typically you will need to move it closer (up) to the capstan roller. The optimal position for the queuing sensor is 1/4-inch away from and pointing directly at (but not touching) the capstan roller.
6. Print a couple of reports and look at the output.
7. Examine the tracings to verify that the writer is operating properly.
   - The paper should queue between each report.
   - If the thermal print head pressure is correct, the printing will be uniform in darkness across the width of the paper.
   - A burned-out print head element will cause gaps in the output that line up horizontally.
   - Uneven paper speed will cause the output to be wavy in spots.
8. If the writer is operating properly, replace the top cover.

Writer Door Optic Cable Assembly Adjustment

If the writer fault LED on the front of the MUSE Network Writer does not indicate that the writer door is open, the writer door optic cable assembly may need cleaning.

Do this procedure with the MUSE Network Writer powered up.

1. Open the writer door.
2. The optic sensor is mounted to a bracket and pointed at a flange on the writer door (when the writer door is closed).
3. Blow any dust away from the optic sensor. Sometimes dust buildup can cause the sensor to not work properly. If there was a lot of dust, try closing the writer door to see if the problem is fixed before continuing with the next step.
4. Back out the screws holding the queuing sensor in place so the queuing sensor can be moved up or down.
5. Adjust the position of the optic sensor in small increments (1/16- to 1/8-inch). The optimal position for the optic sensor is 1/4-inch away from and pointing directly at (but not touching) the flange on the writer door.
6. Watch the writer fault LED and close the writer door to see if the problem is fixed. If not, also check the writer door optic cable assembly, the LED pcb assembly, and the motor control pcb assembly.

Jumper/Switch Settings

Motor Control PCB Assembly

The motor control pcb assembly has 1 DIP switch.

SW1

Stations 1 – 3 set the thermal print head resistance according to the following table.

Table 8-1. Thermal Print Head Resistance

Thermal Print Head Resistance	SW1-1	SW1-2	SW1-3
520 Ω to 547 Ω	off	off	off
548 Ω to 575 Ω	on	off	off
576 Ω to 605 Ω	off	on	off
606 Ω to 637 Ω	on	on	off
638 Ω to 670 Ω	off	off	on
671 Ω to 705 Ω	on	off	on
706 Ω to 741 Ω	off	on	on
742 Ω to 780 Ω	on	on	on

Station 4 sets the 78310 graphics processor to use external memory, and should always be OFF.

Network Writer/Local Acquisition Port Interface PCB Assembly

The network writer/local acquisition port interface pcb assembly has 1 jumper.

W1

Jumper W1 sets the I/O address of the network writer/local acquisition port interface pcb assembly. The state of W1 depends upon how many network writer/local acquisition port interfaces are in the computer. It should be set as follows.

Table 8-2. Jumper W1 I/O States

State	I/O Address	Comment
Removed	300H[1]	Use for 1st network writer/local acquisition port interface in a computer.
Installed	310H	Use for 2nd network writer/local acquisition port interface in a computer.

1. I/O address 300H cannot be used with the Rockaway workstation unless onboard audio is disabled.

Known Problems

Static

The plastic writer door on early MUSE Network Writers caused erratic writer behavior due to static. Replace the plastic writer door with a metal door and handle. See the parts list for the MUSE Network Writer assembly to find out the part number that you need to order. (Reference Tech Memo DPCMUSE-003-4.)

Failure to Load Writer DRAM During Boot

This problem occurs in -001, -002, and -003 versions of the network writer/local acquisition port interface pcb assembly when the MUSE Network Series system is upgraded to version 002A software.

Capacitors C30 and C31 must be changed from 100 pF to 330 pF. Order capacitors pn 1281-331, quantity 2. On the -001 version of the board, there may not be reference designations silk screened on the board. C30 and C31 are the capacitors that are piggy-backed across U24. (Reference Tech Memo DPCMUSE-016-2.)

Selecting the Defective Assembly

Writer Diagnostics

The diagnostics for the MUSE Network Writer are found in the Service directory. To run them, you must first get to DOS.

To get to the Service directory, do the following steps.

1. From the *C:\MEI*> prompt, type **cd..** and press the **Enter** key.
2. From the *C:*\> prompt, type **cd service** and press the **Enter** key.

Writer Tests

Writer tests must be run from the computer to which the MUSE Network Writer is connected. If the MUSE Network writer is connected to a client, you must borrow a keyboard and VGA monitor from another workstation on the network. Alternately, you can borrow from another IBM-compatible personal computer. Use any monitor from the MUSE Network as all work for these tests.

The first test is a good check of the network writer/local acquisition port interface pcb assembly and the writer as a whole. It prints all 17 or so report formats to the MUSE Network Writer. Printing all those reports takes several minutes, but you can quit out of the test by pressing the ESC key.

From the *C:\SERVICE*> prompt, type **pspool allfmts** and press the **Enter** key. The power on/printer busy LED flashes while printing is going on. When all reports are finished or you escape from the printing, the power on/printer busy LED goes on solid. Other tests you can run here are:

- pspool e — prints ECG report formats
- pspool h — prints high-resolution reports
- pspool p — prints pacemaker reports

The next test is more complex, and not all of the options are for testing the MUSE Network Writer.

1. From the *C:\SERVICE*> prompt, type **host** and press the **Enter** key. A screen with many small boxes and one large box appears.
2. Type **halt** and press **Enter**.
3. Type **boot** and press **Enter**. This activates the small port boxes on the top of the screen. Notice that the port box that is missing on the top of the screen is enlarged at the bottom of the screen. Use the arrow keys to move other small port boxes to the bottom of the screen.

   The only 2 ports that will help at this point are “port A-b” and “port C-d”. In addition, some tests also use “console-a” (where you were when you halted and booted).
4. Use the arrow keys to enlarge the *port A-b* on the bottom of the screen.

5. Type **?** and press **Enter** to get a list of commands. You can do this whenever you need to. The commands that start with the letter "w" are for the writer. The following steps run through these commands.
6. Type **wdiag** and press **Enter**. This prints a writer test pattern. This test keeps running until you type **wstop** and press **Enter**.
   - Make sure that the diagonal lines are not wavy and that the distance between tick marks measures correctly. Wavy lines mean the roller is out of round, and should be replaced. Inaccurate measurements means that either the roller is out of round, or that the motor is going too fast or slow.
   - Make sure that the darkness of the lines is consistent from top to bottom. Inconsistent darkness from top to bottom means that thermal print head pressure needs adjustment.
   - Make sure there are no breaks in the black lines. Breaks in the lines means that an element in the thermal print head is burned out, and the print head needs replacing.
7. Type **wque** and press **Enter**. The writer should queue the thermal paper. If not, check the optical sensor for dust buildup and proper position.
8. Type **wrunout** and press **Enter**. The thermal paper feeds to the next sheet, much like a form feed.
9. Type **wcom** and press **Enter**. This sends commands to the writer that make the writer step repeatedly at about 1 second intervals. To end this test, use the arrow keys to get the *console-a* box at the bottom of the screen. Type **halt** and press **Enter**, then **boot** and **Enter** — just like you did before.
10. Use the arrow keys to get the *port A-b* box on the bottom of the screen again. Type **?** and **Enter** if you want to see the commands.
11. Type **wset** and **Enter**. The writer settings appear on the screen.

MAC 6/MAC PC Local Acquisition Port Tests

Port C-d tests the MAC 6/MAC PC Local Acquisition Port and a portion of the network writer interface pcb assembly.

1. Use the arrow keys to get *port C-d* on the bottom of the screen. Note that the display says *0 ECGs were received*.
2. Connect a GE Marquette cardiograph to the MAC 6/MAC PC Local Acquisition Port on the computer and transmit an ECG.
3. The display in port C-d now should say that *1 ECG was received*. If you transmit more ECGs, they should register in port C-d. The actual ECG files for this test go into the Service directory, not into the customer's database.
4. To get out of the writer diagnostics, type **halt** and **Enter**.
5. Next, hold down the **Ctrl** key and press the **C** key. This gets you back to the service directory.

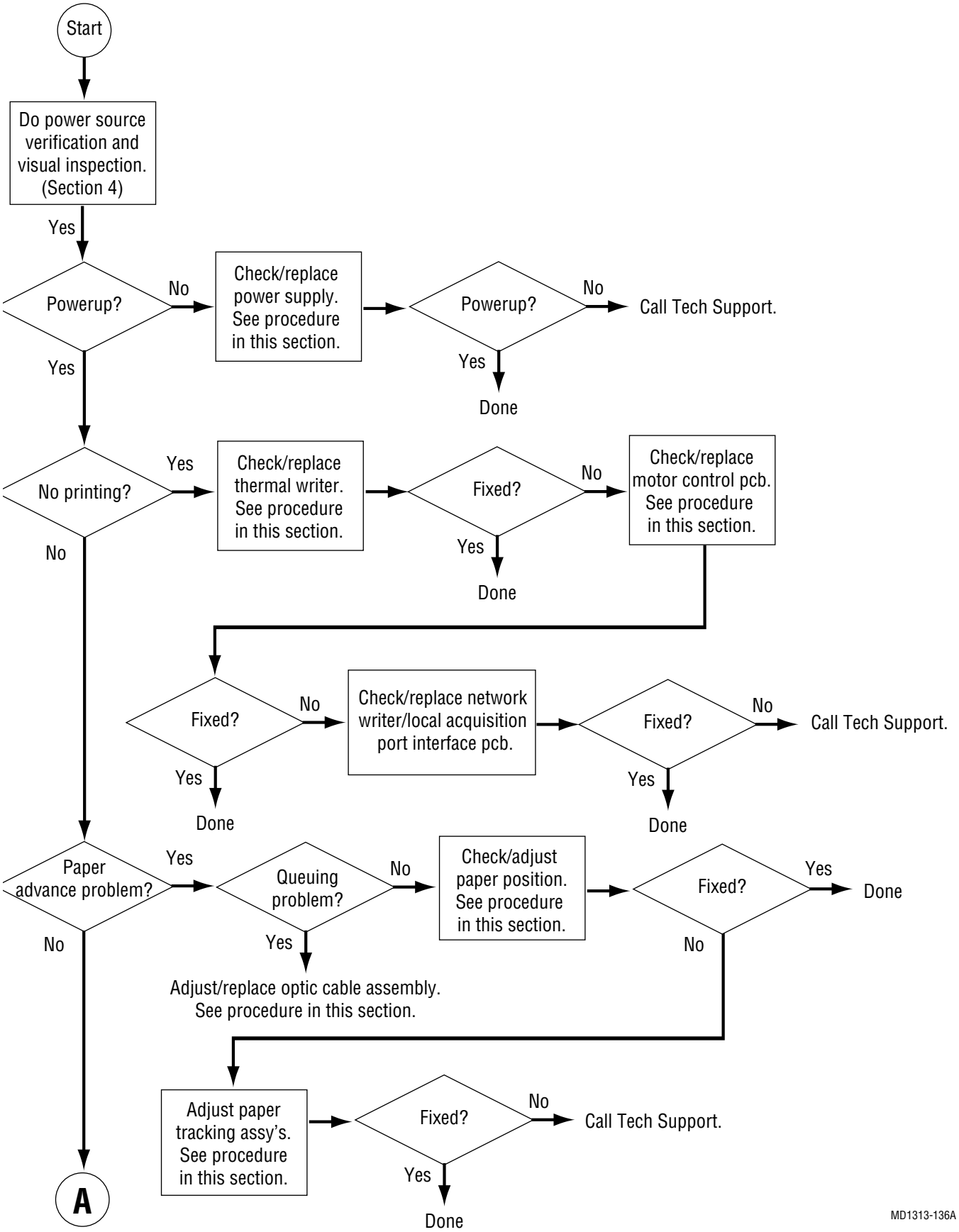
Start
Do power source verification and visual inspection. (Section 4)
Yes
Powerup?
No
Check/replace power supply. See procedure in this section.
Powerup?
No
Call Tech Support.
Yes
Done
Yes
No printing?
Yes
Check/replace thermal writer. See procedure in this section.
Fixed?
No
Check/replace motor control pcb. See procedure in this section.
Yes
Done
No
Fixed?
No
Check/replace network writer/local acquisition port interface pcb.
Fixed?
No
Call Tech Support.
Yes
Done
Yes
Done
Paper advance problem?
Yes
Queuing problem?
No
Check/adjust paper position. See procedure in this section.
Fixed?
Yes
Done
No
Yes
Adjust/replace optic cable assembly. See procedure in this section.
No
Adjust paper tracking assy's. See procedure in this section.
Fixed?
No
Call Tech Support.
Yes
Done
A
MD1313-136A

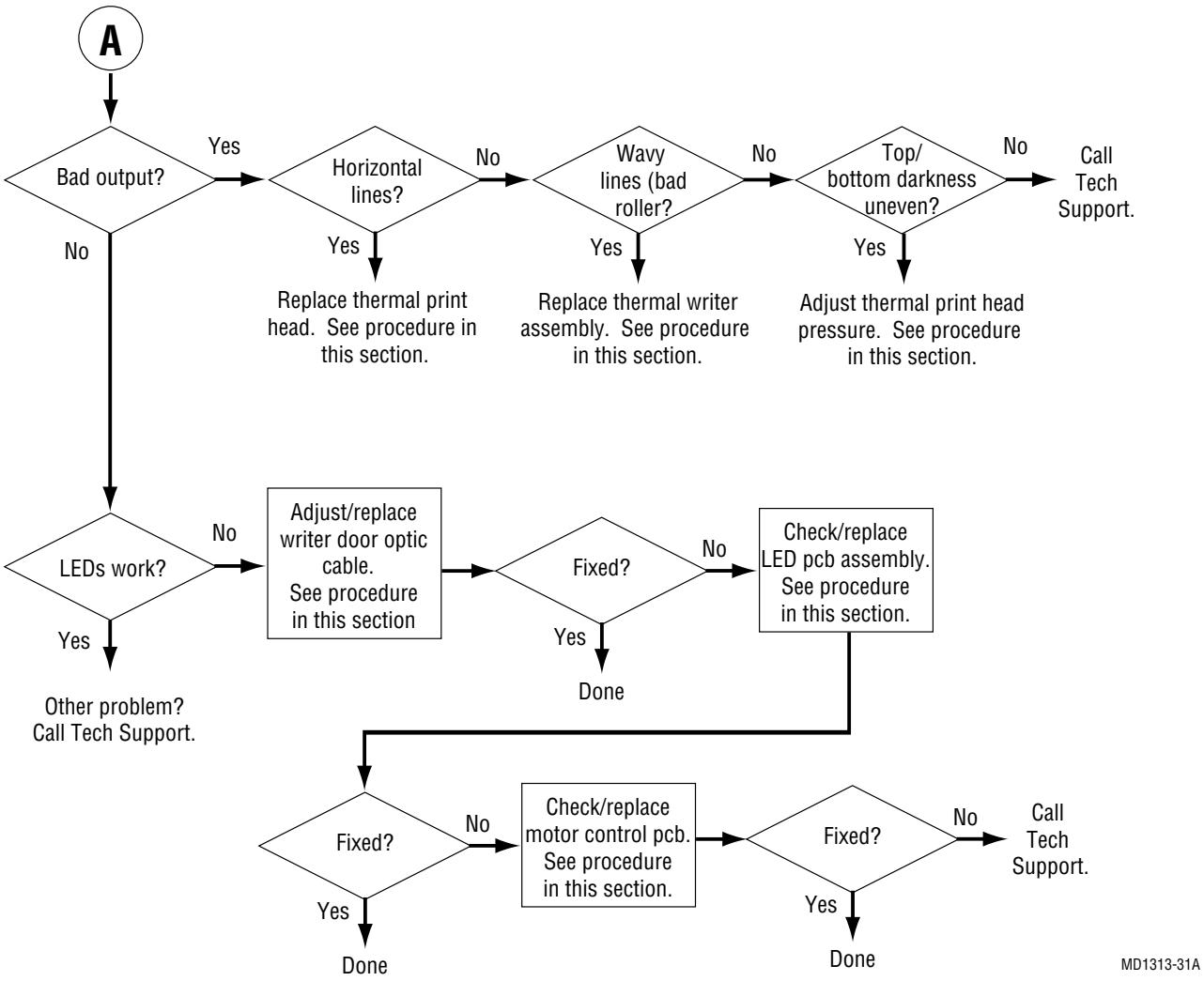
A
Bad output?
Yes
No
Horizontal lines?
No
Yes
Replace thermal print head. See procedure in this section.
Wavy lines (bad roller?
No
Yes
Replace thermal writer assembly. See procedure in this section.
Top/ bottom darkness uneven?
No
Yes
Adjust thermal print head pressure. See procedure in this section.
Call Tech Support.
LEDs work?
No
Yes
Other problem? Call Tech Support.
Adjust/replace writer door optic cable. See procedure in this section
Fixed?
No
Yes
Done
Check/replace LED pcb assembly. See procedure in this section.
Fixed?
No
Yes
Done
Check/replace motor control pcb. See procedure in this section.
Fixed?
No
Yes
Done
Call Tech Support.
MD1313-31A

Removing/Installing the Top Cover

To remove the top cover of the MUSE Network Writer:

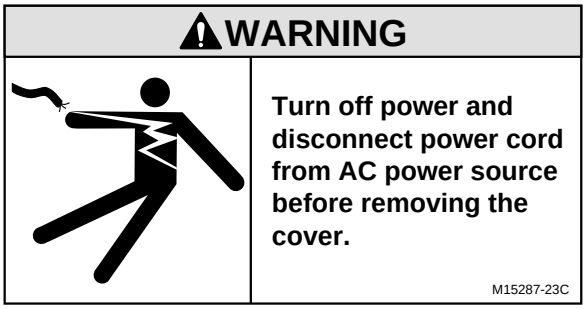

1. Set the power switch to the **0** or “off” position. Unplug the power cord from the wall receptacle.
2. Unplug the MUSE Network Writer from the MUSE CV system.

3. Disassemble the writer as shown below. Remember to disconnect the LED cable.

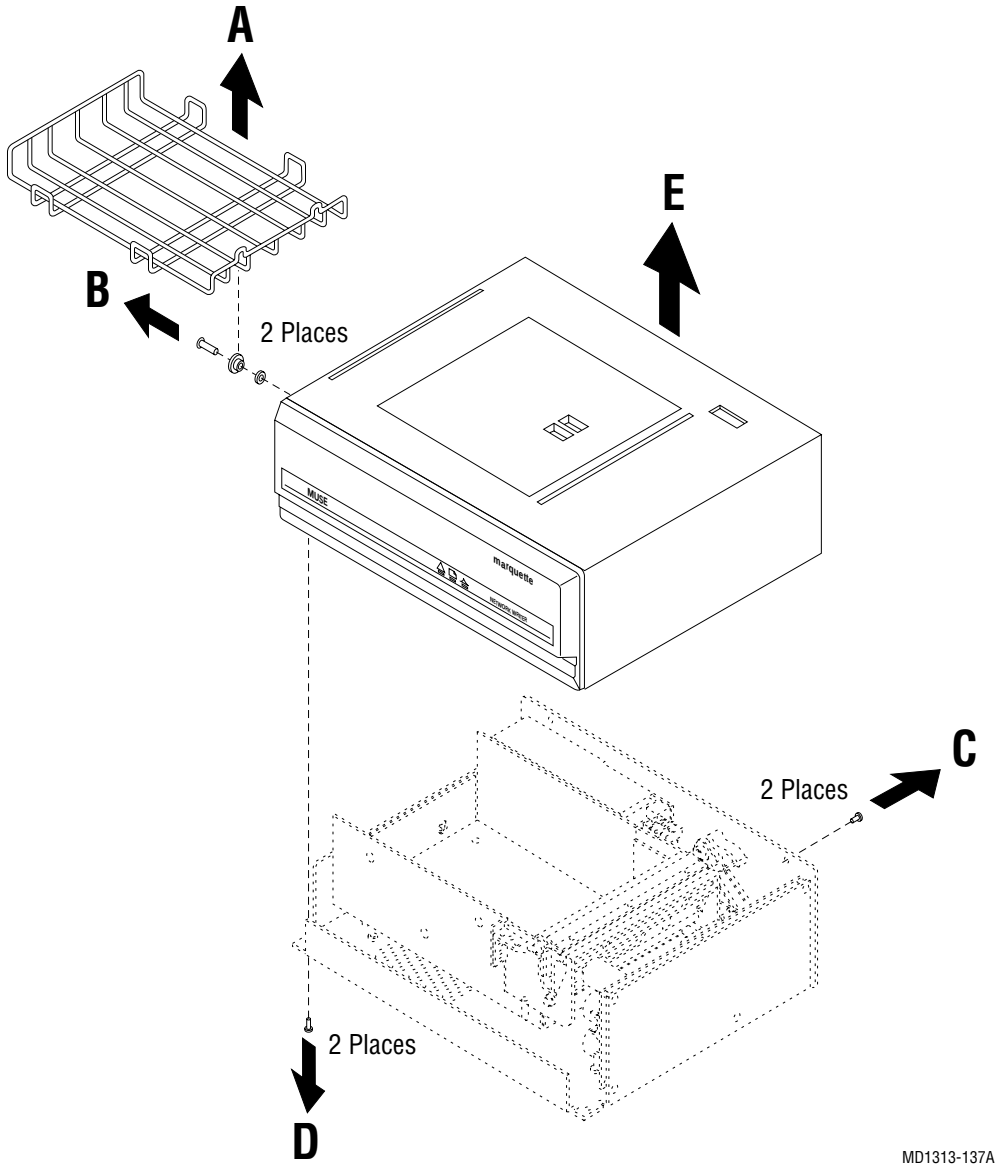

Installation

To attach the top cover, reverse the above procedure.

Removing/Installing the Writer Door Optic Cable Assembly

Removal

To remove the writer door optic cable assembly:

1. Remove the top cover. See “Removing/Installing the Top Cover”.
2. Before replacing the sensor, make sure there is no dust buildup on it. Dust could cause the optic sensor to malfunction.
3. Remove 2 screws holding the optic sensor as shown below.

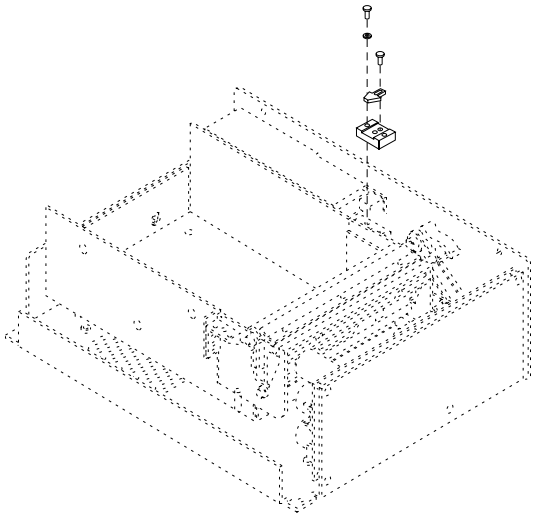

MD1313-32A

4. Disconnect the optic cable assembly from the motor control pcb assembly.

Installation

To install a new writer door optic cable assembly, reverse the above procedure. After installation:

⚠ WARNING

High voltages exist in unit. Use insulated tools. Remove jewelry. Use only one hand when possible.

M15287-19B

1. Connect the power cord and turn the writer on.
2. Watch the writer fault LED and close the writer door to make sure the optic sensor is positioned properly.

Removing/Installing the LED PCB Assembly

Removal

Follow these steps to remove the LED pcb assembly.

1. Remove the top cover. See “Removing/Installing the Top Cover”.
2. Remove the LED pcb assembly from the top cover as shown below:

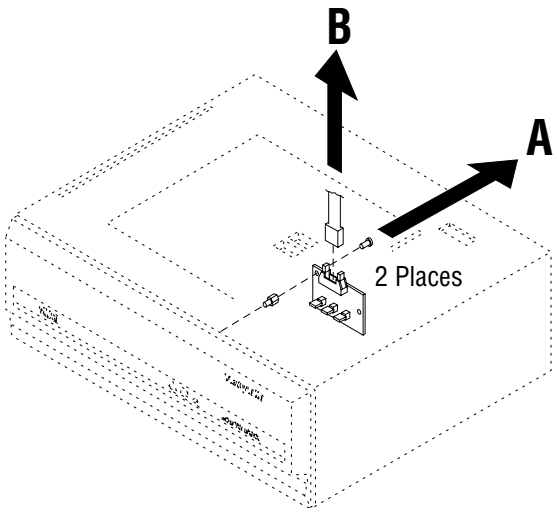

MD1313-33A

Installation

To install the LED pcb assembly:

1. Reverse the above procedure.
2. Connect the power cord and turn the writer on. Make sure all LEDs work.

Removing/Installing the Writer/Tray Assembly

Removal

Follow these steps to remove the writer/tray assembly from the MUSE Network Writer:

1. Remove the top cover. See “Removing/Installing the Top Cover”.
2. Remove the writer/tray assembly as shown below:

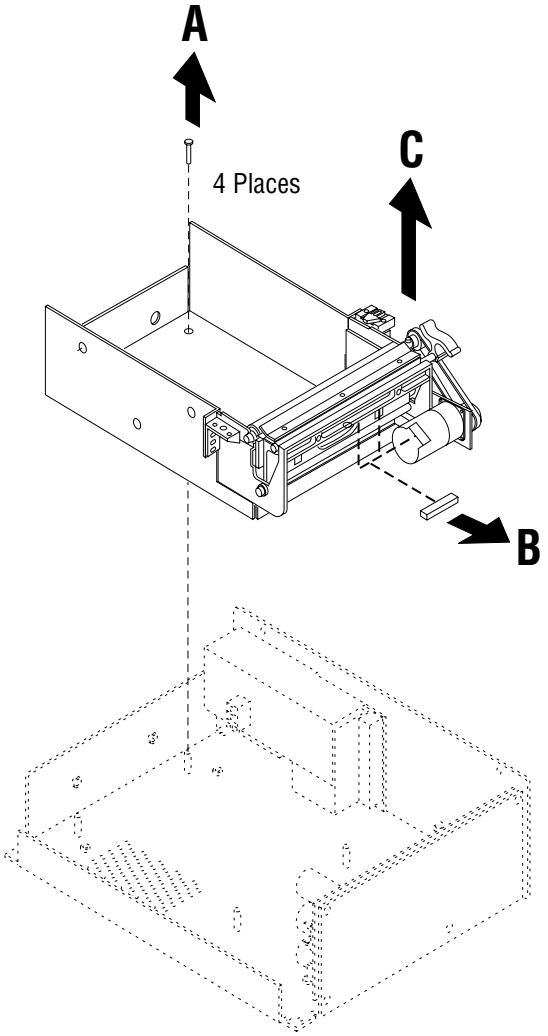

Installation

Reverse the above procedure to install the writer/tray assembly.

Removing/Installing the Thermal Writer Assembly

Removal

Follow these steps to remove the thermal writer assembly.

1. Remove the top cover. See “Removing/Installing the Top Cover”.
2. Remove the writer/tray assembly. See “Removing/Installing the Writer/Tray Assembly”.
3. Remove the thermal writer assembly from the paper tray as shown below:

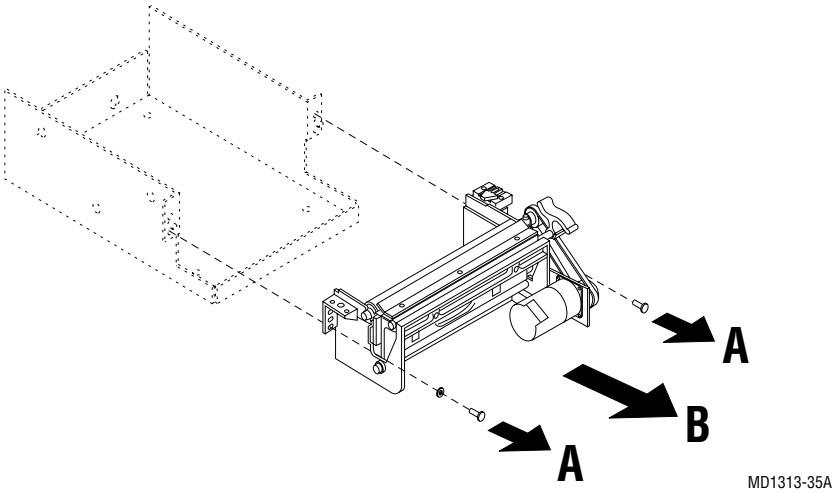

Installation

Reverse the above procedure to install a new thermal writer assembly.

1. Be sure to write down the thermal print head resistance that is found on the end of the new thermal print head. You will need this resistance value to properly set switch SW1 on the writer interface pcb assembly.
2. Set switch SW1 on the writer interface pcb assembly. See “Jumper/Switch Settings” earlier in this section.

Disassembly/Assembly

Remove the unit's top cover.

WARNING

High voltages exist in unit. Use insulated tools. Remove jewelry. Use only one hand when possible.

M15287-19B

WARNING

Only qualified personnel should perform the following procedure.

M15287-30A

Exploded View

This illustration shows an exploded view of the Thermal Writer Assembly for reference during disassembly/assembly. Replacing the entire assembly is recommended due to its complexity. See Chapter 8, "Parts Lists and Drawings" for other field replaceable parts.

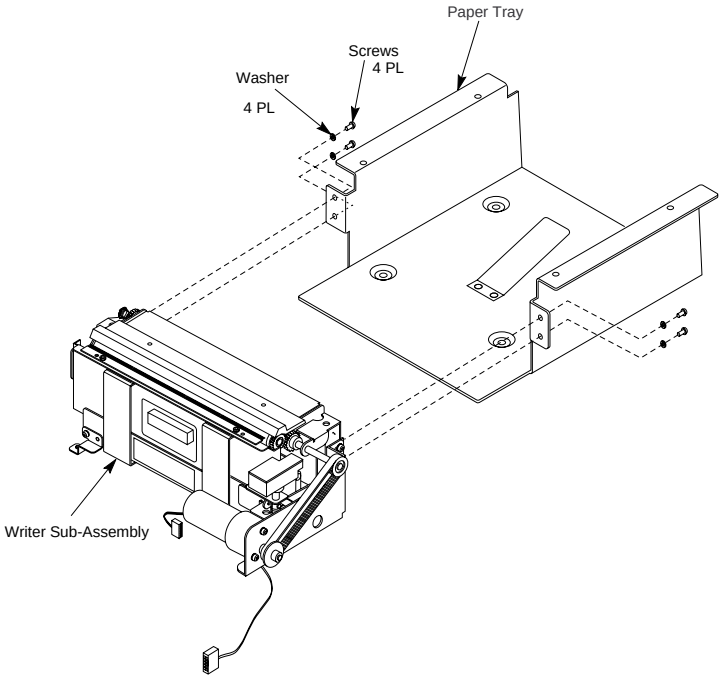

Removing/Installing the Thermal Print Head

NOTE

The thermal print head is static sensitive. Proper grounding is required when handling the thermal print head. Avoid touching the pins of the thermal print head. Work on a static-free work surface.

1. Disconnect the writer cables. Press the paper release push button to disengage the thermal paper capstan/roller. Slide the print head release slide bar until print head is loose.

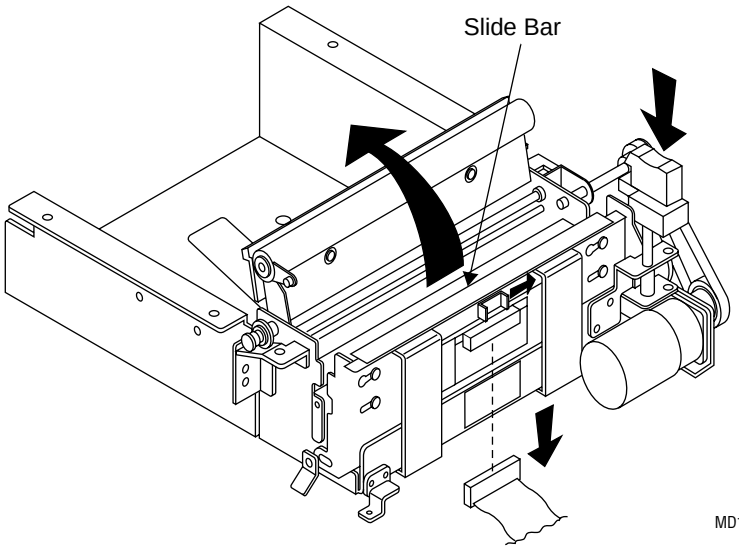

2. If a rubber bumper pad is installed on the printhead release bracket, remove and discard it.

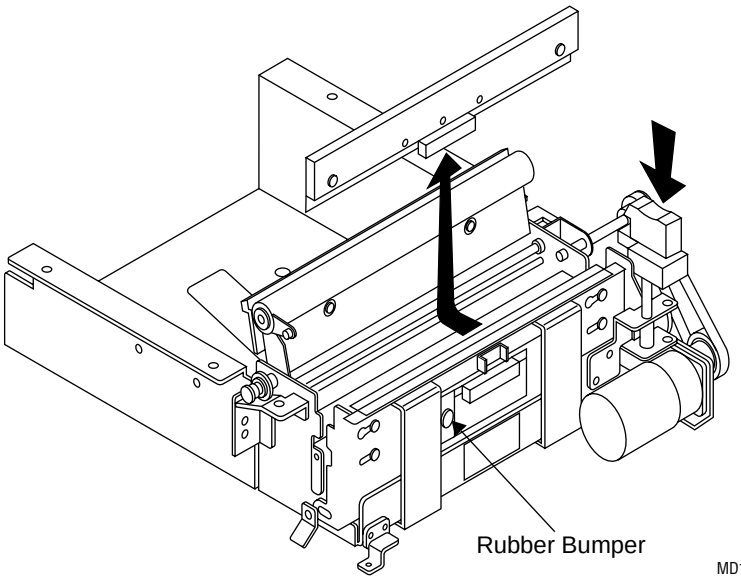

3. Remove and discard print head.

4. Install new print head.

> **NOTE**
>
> Make sure print head includes the two brass alignment pegs.

5. Slide the print head release slide bar until print head is locked into position.
6. Install a new rubber bumper pad PN 4616-001 on the printhead release bracket.
7. Reconnect the writer cable.
8. Print a rhythm strip to verify the print head alignment. The leading edge of each calibration pulse should not deviate more than ±0.5 mm from the vertical edge.

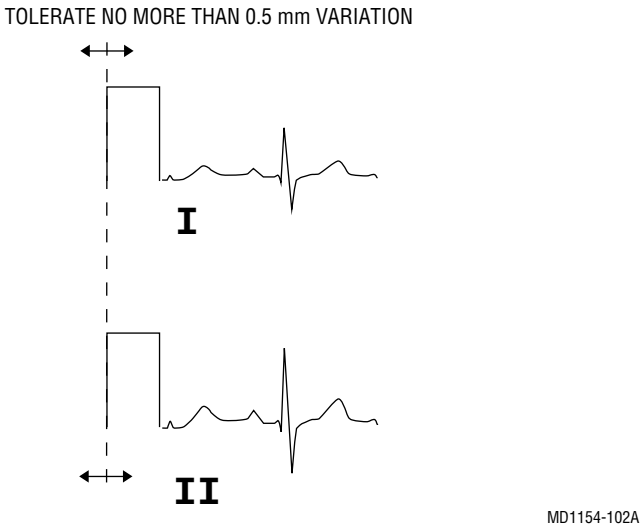

9. If the thermal print head pressure is correct, the printing will be uniform in darkness across the width of the thermal paper.
10. If the writer is operating properly, replace the top cover.

Removing/Installing the Optic Cable Assembly (Queuing Sensor)

If the queuing sensor is positioned correctly (1/4-inch away and pointed directly at capstan roller), but queuing does not work properly, then the queuing sensor should be replaced.

1. Remove the top cover. See “Removing/Installing the Top Cover”.
2. Remove the thermal writer assembly. See “Removing/Installing the Writer/Tray Assembly” and “Removing/Installing the Thermal Writer Assembly”.

NOTE

The thermal print head is static sensitive. Proper grounding is required when handling the thermal writer assembly. Avoid touching the pins on the thermal print head. Work on a static-free work surface.

3. Remove the screw securing the optic cable assembly (queuing sensor) to the mounting bracket.
4. Install the new optic cable assembly onto the mounting bracket and secure it with the screw that was previously removed.
5. Adjust the position of the queuing sensor as directed in the paragraphs titled “Optic Cable Assembly (Queuing Sensor) Adjustment” in this section.
6. Install the thermal writer assembly in the MUSE Network Writer. See “Removing/Installing the Writer/Tray Assembly” and “Removing/Installing the Thermal Writer Assembly”.
7. Connect the power cord and turn on the MUSE Network Writer.

⚠ WARNING

High voltages exist in unit. Use insulated tools. Remove jewelry. Use only one hand when possible.

M15287-19B

8. Print several reports and examine the output.
   - The paper should queue between each report.
   - If the thermal print head pressure is correct, the printing will be uniform in darkness across the width of the paper.
   - A burned-out print head element will cause gaps in the output that line up horizontally.
   - Uneven paper speed will cause the output to be wavy in spots.
9. If the writer is operating properly, replace the top cover.

Removing/Installing the Power Supply Assembly

Removal

Follow these steps to remove the power supply assembly.

1. Remove the top cover. See “Removing/Installing the Top Cover”.
2. Remove the writer/tray assembly. See “Removing/Installing the Writer/Tray Assembly”.
3. Remove the power supply assembly as shown below:

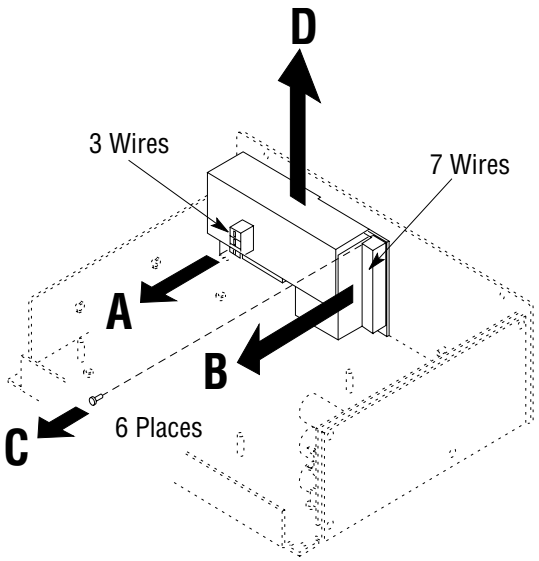

Installation

Reverse the above procedure to install a new power supply assembly.

Removing/Installing the Motor Control PCB Assembly

Removal

Follow these steps to remove the thermal writer assembly.

1. Remove the top cover. See “Removing/Installing the Top Cover”.
2. Remove the writer/tray assembly. See “Removing/Installing the Writer/Tray Assembly”.
3. Remove the fuse holder/inlet power connector, but leave the wires connected. (Do this to gain access to the screw in the bottom corner of the writer.) There are tabs on the sides of the connector that press in to release the connector.

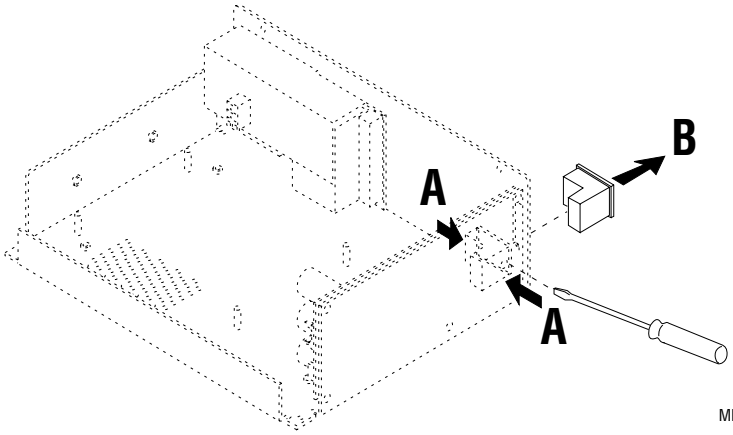

4. Remove the motor control pcb assembly as shown below:

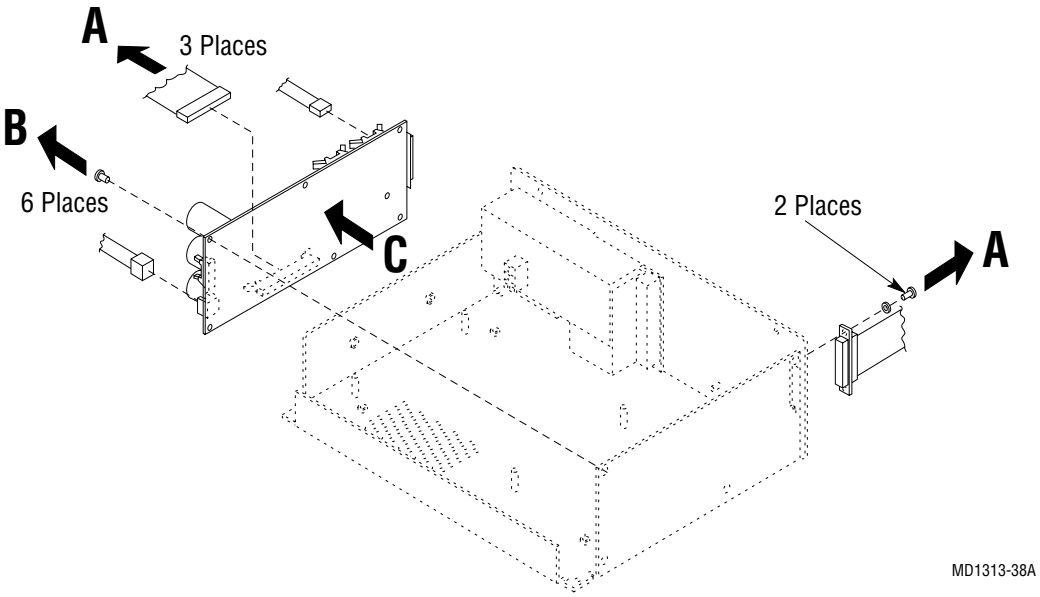

Installation

Reverse the above procedure to install a new motor control pcb assembly.

9 Parts Lists

Ordering Parts **9-5**

Field Replaceable Units **9-6**

FSHRD (Rev A) **9-14**

FSSFT (Rev A) **9-18**

CLHRD (Rev A) **9-20**

CLSFT (Rev A1) **9-24**

WSHW (Rev A1) **9-27**

D900124AMUSE Nightshade Integrated **9-31**

Compaq Server Assy, 901107-1XX **9-33**

901070-001 (Rev E)MUSE Desktop Assembly **9-39**

900135-501(Rev G)Communication Server **9-42**

900680-501 (Rev G)MUSE Gateway **9-44**

900129-5XX (Rev J)Network Workstation **9-45**

405864-011 (Rev A)Network Writer Assembly **9-48**

405864-012 (Rev A)Network Writer Assembly (220-240V) **9-50**

405864-013 Rev A)Network Writer Assembly (240 V) Brit **9-53**

400303-104 Rev C)8-Inch Writer Assembly **9-56**

413453-002 Rev E)Writer Sub-Assembly **9-57**

900723-XXXInternational Modems **9-58**

Germany 9-58
France 9-58
Sweden 9-59
United Kingdom 9-59
Spain 9-59

Italy 9-59
Australia 9-59
Austria 9-60
Bahrain 9-60
Belgium 9-60
Czechoslovakia 9-60
Denmark 9-61
Finland 9-61
Hungary 9-61
Iceland 9-61
Ireland 9-61
Japan 9-62
Russia 9-62
Malaysia 9-62
Mexico 9-62
Netherlands 9-63
New Zealand 9-63
Norway 9-63
Poland 9-64
Portugal 9-64
Singapore 9-64
South Africa 9-64
Switzerland 9-65
Turkey 9-65
Ukraine 9-65
Hong Kong 9-65
Slovak Republic 9-65

Kits 9-66
900811-001 (Rev C) – KIT MUSE DICTATION 9-66
900684-003 (Rev C) – KIT MUSE DIGIBOARD 9-66
900684-004 (Rev B) – KIT MUSE DIGIBOARD 9-66
900471-201 (Rev C) – KIT NTWK MUSE THIN ETHERNET 9-66
901215-001 (Rev A) – KIT MUSE WRITER BRD/CBL NON-CE 9-66
901206-001 (Rev A1) – KIT MUSE ACC REGISTRY DRV/SW 9-67
901124-001 (Rev A) – KIT MUSE DAT TAPES/LBLS/CLNG 9-67
2000390-001 (Rev A) – KIT MUSE FS UPGR 200MHZ 5A ENG 9-67
901072-001 (Rev B) – Kit MUSE DAT Drive 12GB 9-68

Sub-Assemblies 9-69
Wire 16 GA Grn/Yel 4L (PN 80307-053A) 9-69
Cable 10 Conductor Ribbon 11 Inch (PN 80616-001H) 9-69
Cable Power Dist MUSE Network Writer (PN 80862-002A) 9-70
Cable Door Opt Sensor MUSE Writer (PN 88114-006) 9-70
MAC6/8 Acquisition Deskside Assy – (PN 405835-009D) 9-71

Kit Metal MUSE Network Writer (PN 420287-001B) 9-71
Cable Internal MUSE Network I/O (PN 700081-001B) 9-71
Cable INT Power Writer (PN 700083-001C) 9-72
Cable PVC Thin-net Coax 15Ft (PN 700109-015B) 9-72
Cable Pwr/Pwr Supply MUSE Writer (PN 700111-001D) 9-72
Cable Writer Intcon (PN 700145-001A) 9-73
Harness MAC 8/MUSE Writer Serial (PN 700461-002C) 9-73
Cable D9 M/D9 F MAC 8/MUSE (PN 700491-002E) 9-73
PS/2 Barcode Wand with Edit Label (PN 900266-103E) 9-74
Twisted Pair PCI (PN 900471-402D) 9-74
Kit Keyboard – English (PN 900508-001D) 9-74
Kit Laser Printer PS2 –100-120V (PN 900623-001D) 9-75
Kit Laser Printer PS2 –220-240V (PN 900623-002E) 9-75
Kit Multitech Modem – 120V (PN 900723-001A) 9-76
Kit PCI Video Board (PN 900881-004C) 9-76
Kit MUSE CD-ROM/Disk (PN 900881-011B) 9-76

Ordering Parts

Introduction

The parts lists and assembly drawings in this chapter supply enough detail for you to order parts for the assemblies considered field serviceable.

If you require additional information, schematic diagrams, or troubleshooting assistance, contact Technical Support.

To order parts, contact Service Parts at the address or telephone number on the, “How to Reach Us...,” page provided at the beginning of this manual.

Field Replaceable Units

The following items may not be assigned separate manufacturing part numbers because they are normally part of a larger assembly. Since they are considered field replaceable units (FRUs), they have specific service part numbers so they can be ordered and replaced by service technicians. Contact Tech Support for FRU information for assemblies used on previous configurations.

NOTE

Verify part numbers before ordering service parts (FRUs). See the tech memo series for this product for changes or additions to this list.

Table 9-1. Field Replaceable Units

Item	Part Number
File Server Computer, INTEL, Nightshade N440BX	**900124-801**
Bezel Assembly (811152)	FRU615917
Fan Bracket (811210)	FRU650566
Chassis (811226)	FRU651331
Cable, Floppy (811235)	FRU654277
Peripheral Drive Rail, 10-Pack (811256)	FRU659250
SLT1TERM Terminator Card, 20-Pack (815364)	FRU660391
Non-PFC Power Supply, 275W (811265)	FRU661386
PFC Power Supply, 275W (816571)	FRU661387
PFC Power Supply, 300W (817877)	FRU682139
CPU Retention Mechanism, 10-Pack (815361)	FRU669496A
Fan Assembly, 100CFM, 120mm (816569)	FRU670060/662116
Front Panel Cable, 10-Pack (817879)	FRU684601
Front Panel (817888)	FRU695948
L Cover, 10-Pack (818134)	FRU650532
L Cover, 10-Pack (818134)	FRU650532
Access Cover, 10-Pack (818133)	FRU687819
N440BX Country Kit, 10-Pack (817925)	FRU687059
CMPTR CPU P3-500	2001640-003

Table 9-1. Field Replaceable Units (Continued)	
Item	**Part Number**
MEM 256MB DIMM PC100 ECC	2001640-004
DISK DRIVE 18GB LVD 1 INCH	2001640-005
DISK DRIVE CDROM 40X IDE SONY	2001640-006
CABLE RIBBON SCSI 68P W/ TERM 5CONN 3FT	2001640-007
TERMINATOR CPU SLOT 1	2001640-008
CABLE RIBBON IDE	2001640-009
Desktop Client	**901070-001**
Cocoa Beach Riser	FRU674517
Enclosure Assembly	FRU668166
Chassis, NLX	FRU673679
Side Plate Assembly	FRU668541‘
Device Bracket	FRU669197
FDD, 3 mode, Dusty Beige	FRU682025
Misc parts Assembly	FRU690002FAN
Speaker Mount Assembly (Reuters)	FRU681699
FDD, Bracket	FRU669199
PS, 160/145, NPFC, PS2	FRU668424
PS, 160/145, W/PFC, PS2	FRU668242PFC
Drive, Floppy, 1.44MB, 3-Mode	FRU624055
HP Laser Jet 4050N Printer	
Toner Cartridge	900623-902
Compaq RAID Server	**421519-101**
COMPUTER PROLIANT 3000R 450MH	422402-001
SDRAM DIMM KIT 128MB 10NS	422402-002
DDS3 DAT DRIVE	421572-003
SMART2DH RAID CONTROLLER	421572-004
REDUNDANT POWER SUPPLY	421572-005
REDUNDANT FAN KIT	421572-006
ACCELEPORT 8R 920 SER MLTPLR	412946-005
CABLE 8 PORT DB9M	414961-002

Table 9-1. Field Replaceable Units (Continued)	
Item	**Part Number**
KEYBOARD W/TRACKBALL	421572-012
Compaq RAID Server With Rack / UPS 120V	**421519-102**
COMPUTER PROLIANT 3000R 450MH	422402-001
SDRAM DIMM KIT 128MB 10NS	422402-002
DDS3 DAT DRIVE	421572-003
SMART2DH RAID CONTROLLER	421572-004
REDUNDANT POWER SUPPLY	421572-005
REDUNDANT FAN KIT	421572-006
ACCELEPORT 8R 920 SER MLTPLR	412946-005
CABLE 8 PORT DB9M	414961-002
RACK 22U, COMPAQ	421572-008
KVM SWITCH 4 PORT	421572-009
KVM CABLE SET	421572-010
UTILITY SHELF	421572-011
KEYBOARD W/TRACKBALL	421572-012
KEYBOARD DRAWER	421572-013
MODEM RACK 12 POSITION	418768-001
HUB LINKBUILDER TP/8 10BT 120V	414582-201
UPS, 3KVA	421572-015
Compaq RAID Server With Rack / UPS 220V	**421519-103**
COMPUTER PROLIANT 3000R 450MH	422402-001
SDRAM DIMM KIT 128MB 10NS	422402-002
DDS3 DAT DRIVE	421572-003
SMART2DH RAID CONTROLLER	421572-004
REDUNDANT POWER SUPPLY	421572-005
REDUNDANT FAN KIT	421572-006
ACCELEPORT 8R 920 SER MLTPLR	412946-005
CABLE 8 PORT DB9M	414961-002
RACK 22U, COMPAQ	421572-008
KVM SWITCH 4 PORT	421572-009

Table 9-1. Field Replaceable Units (Continued)	
Item	**Part Number**
KVM CABLE SET	421572-010
UTILITY SHELF	421572-011
KEYBOARD W/TRACKBALL	421572-012
KEYBOARD DRAWER	421572-013
MODEM RACK 12 POSITION	418768-001
HUB LINKBUILDER TP/8 10BT 120V	414582-201
UPS, 3KVA, 208-240V	421572-020

NOTE

Item numbers refer to figures on page 9-12 and page 9-13.

Table 9-2. Field Replaceable Units - Compaq PNs		
Item	**Description**	**Part Number**
	Chassis (RAID File Server):	
1	Chassis	306574-001
2	Side Access Panel	298364-001
3	Access Panel Kit a) U-Channel Access Panel b) Top Access Panel	327835-001
4	Front Bezel Door	298360-001
5	Fixed Front Bezel	298361-001
6	Rack-Mount Bezel Plate	298363-001
7	Locking Casters	296227-001
8	Caster Mounting Support	330485-001
	SYSTEM COMPONENTS (RAID File Server):	
9	Front Fans	306576-001
10	Rear Fan	306577-001
11	Redundant High-Speed Fan	326873-001 *
12	Hot-Plug Power Supply, 750W 1	69286-002
13	Integrated Management Display with Cable	271930-001

Table 9-2. Field Replaceable Units - Compaq PNs (Continued)		
Item	**Description**	**Part Number**
14	Power Switch with LED	387738-001
15	4.5 V Battery Replacement	160274-001
16	Processor, 400/100 MHz	313624-001
17	Processor Power Module	327660-001
18	SCSI Simplex Hot-Plug Cage a) Hot-plug drive cage with simplex board b) Removable media panel	179781-001
	Boards (RAID File Server):	
19	Hot-Plug Power Supply Backplane Board	306571-001
20	System I/O Board with Subpan	306561-001
21	Netelligent 10/100 TX UTP PCI Controller	317606-001
22	IDE CD-ROM with Tray	328707-001
23	1.44-MB Diskette Drive	160788-001
	Memory (RAID File Server):	
24	24 32-MB SDRAM Memory Module (100 MHz)	317747-001 *
25	25 64-MB SDRAM Memory Module (100 MHz)	317745-001*
26	26 128-MB SDRAM Memory Module (100 MHz)	317756-001
27	27 256-MB SDRAM Memory Module (100 MHz)	317749-001 *
28	28 512-MB SDRAM Memory Module (100 MHz)	317748-001 *
	Cable Kits:	
29	Miscellaneous Signal Cable Kit	306565-001 *
30	Miscellaneous Power Cable Kit	306566-001 *
31	Wide SCSI Cable with Terminator, 3D, 22-inch	306579-001 *
	Miscellaneous:	
32	Keyboard	160648-XXX *
33	Miscellaneous Hardware Kit a) power supply blank panel b) blank bezel c) I/O slot card guide *	306567-001
34	Hot-Plug Hard Drive Slot Cover	296200-001
35	Fan Air Baffle (includes miscellaneous parts)	328008-001
36	Return Kit (NA)	298336-001 *

Table 9-2. Field Replaceable Units - Compaq PNs (Continued)		
Item	**Description**	**Part Number**
37	Carton and Buns (International)	298336-002 *
38	Maintenance and Service Guide	179782-001 *
39	Illustrated Parts Map	179783-001 *
	Optione:	
40	Processor, 450/100 MHz	179780-001 *
41	SCSI Duplex Hot-Plug Cage	306572-001 *
42	18.2-GB Wide-Ultra Hard Drive with Tray	313764-001 *
43	9.1-GB Wide-Ultra Hard Drive with Tray	199888-001
44	4.3-GB Wide-Ultra Hard Drive with Tray (1-inch)	242622-001 *
45	2.1-GB Wide-Ultra Hard Drive with Tray (1-inch)	242603-001 *
46	Tower-to-Rack Conversion Kit	298337-001 *
47	Option Board Retainer	271918-001 *
48	Display Module	271930-001 *
49	Locking Caster	296227-001 *
50	Processor Board with Tray	179779-001 *
51	Memory Board	270183-001 *

* Not shown on drawing

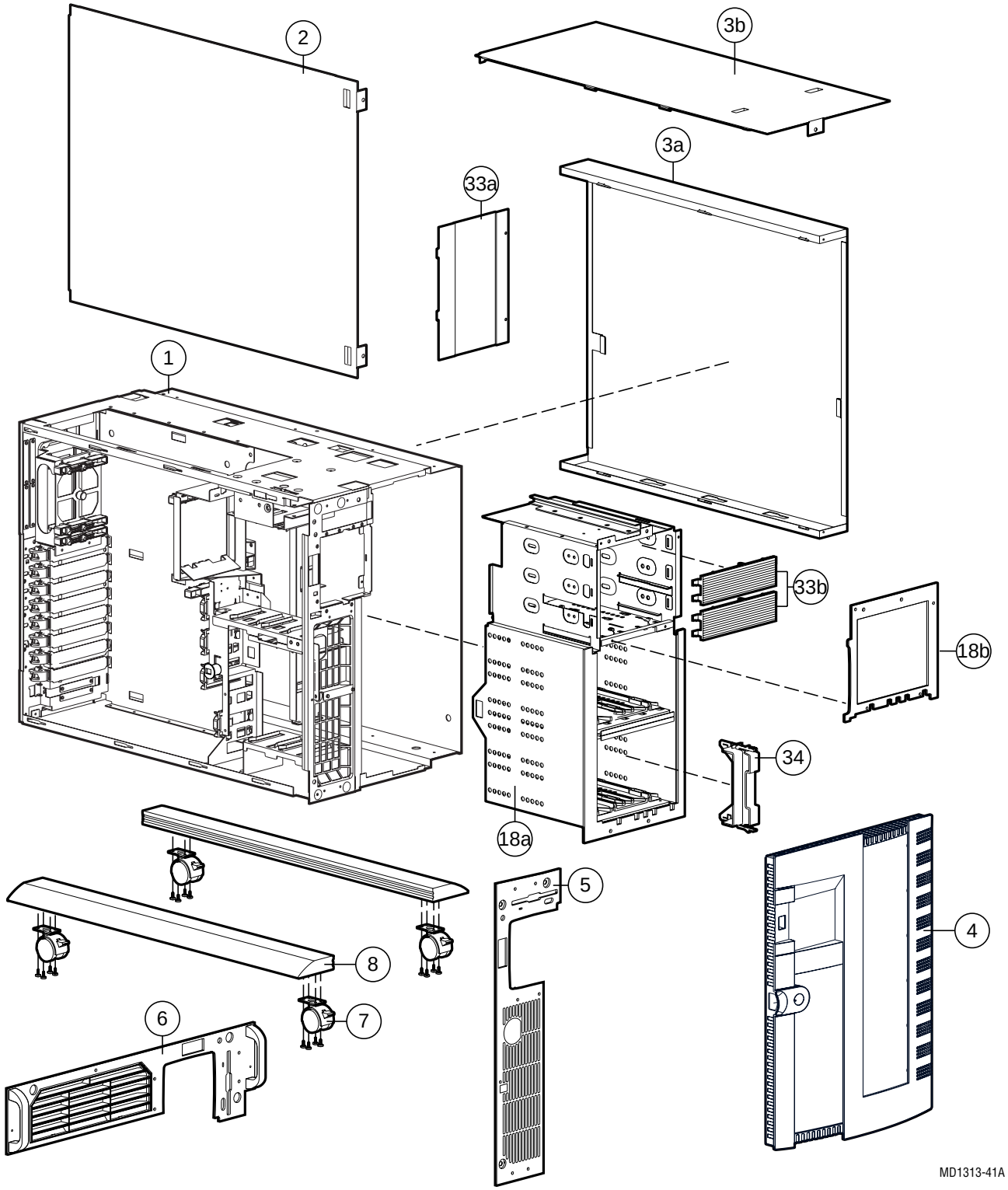
2
3b
3a
33a
1
33b
18b
34
18a
5
4
8
7
6
MD1313-41A

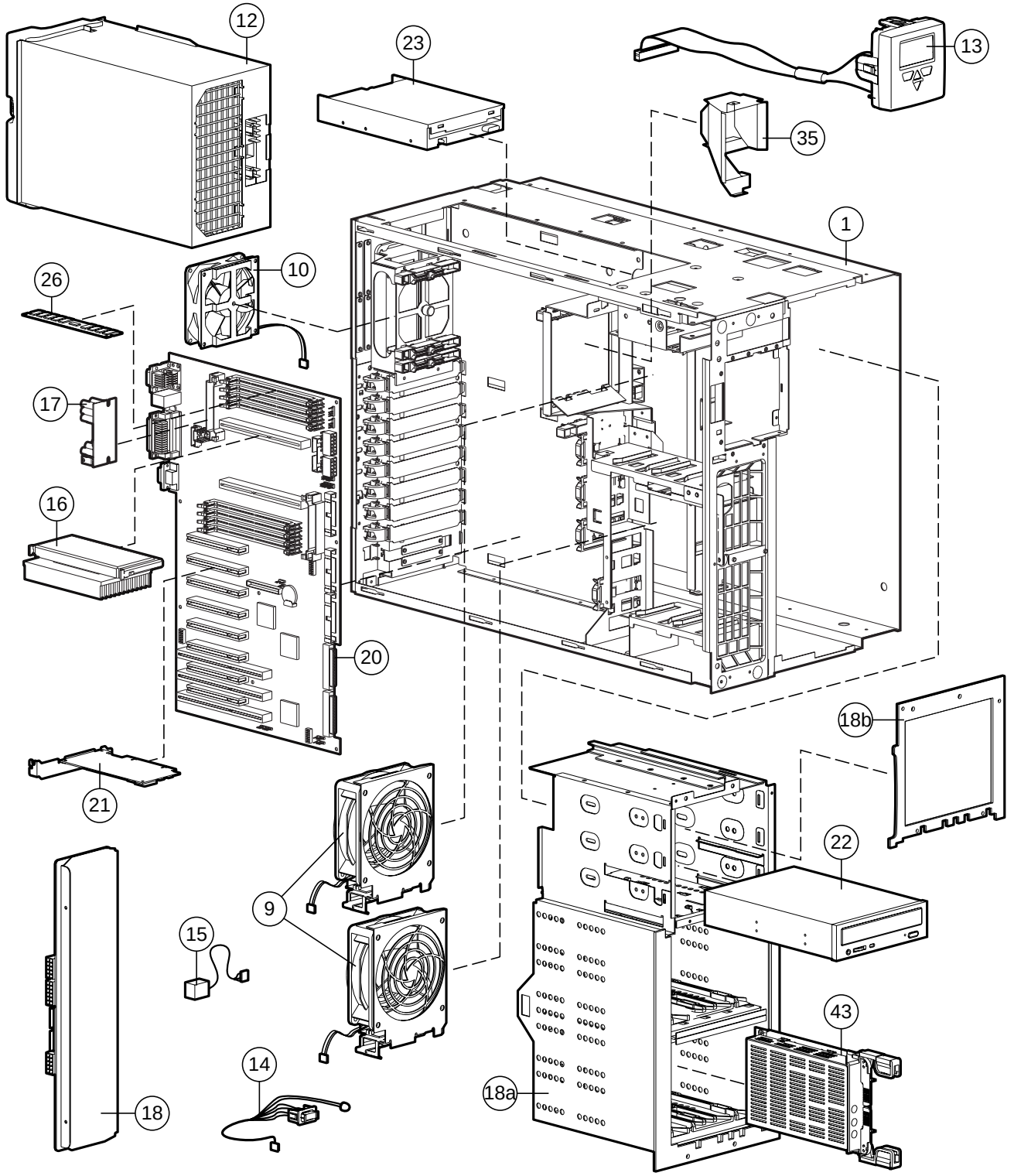
12
23
13
35
1
10
26
17
16
20
18b
21
22
9
15
43
14
18a
18
MD1313-42A

FSHRD (Rev A)

Item Number	Item Description
FSHRD_SYS_VER	MUSE FILE SRVR SYS VERSION PTO OPT CLASS
FSHRD_5A_SYS	MUSE FILE SRVR 5A SYSTEM VERSION
FSHRD_5B_SYS	MUSE FILE SERVER 5B SYSTEM VERSION
FSHRD_SRVR_TYPE	MUSE FILE SRVR TYPE PTO OPT CLASS
FSHRD_TWR_SRVR	MUSE TOWER FILE SERVER 8GB
FSHRD_TWR_SRVR_16GB	MUSE TOWER FILE SRVR W/16GB
FSHRD_18GB_RAID	MUSE 18GB RAID SERVER
FSHRD_45GB_RAID	MUSE 45GB RAID SERVER
FSHRD_18GB_RAID_W/RACK	MUSE 18GB RAID SERVER W/RACK
FSHRD_45GB_RAID_W/RACK	MUSE 45GB RAID SERVER W/RACK
MUSE_MONITORS	MUSE MONITORS PTO OPTION CLASS
420609-001	MONITOR 15" COLOR 100-240V
408057-008	MONITOR 17" COLOR SONY
411937-004	MONITOR 21" COLOR SONY
CUST_SUPP_MON	CUSTOMER SUPPLIED MONITOR
FSHRD_WRITERS	MUSE FILE SRVR WRITERS PTO OPT CLASS
800080-005	PCB 34010 WRITER
MUSE_THRML_PRNTR_BRD	MUSE THERMAL PRINTER W/INTFC BRD
900623-003	KIT LSR PRNTR W/WRTR BRD
900623-001	KIT LSR PRNTR PS2 100-120V
FSHRD_ADDTNL_OPT	MUSE SERVER ADDTNL OPT PTO OPT CLASS
FSHRD_UPS_RAID	MUSE UPS FOR RAID SERVER
POWERCORDS	POWERCORD GENERIC PTO OPTION CLASS
80274-006	CORD PWR 125V 6FT STR
80274-004	CORD PWR 125V 6FT SE
401855-001	PWR CRD CONT EURO 10A 250V 8FT
401855-002	PWR CORD BRITISH 10A 250V 8FT
401855-003	PWR CORD ITALIAN 10A 250V 8FT

Item Number	Item Description
401855-004	PWR CORD ISRAELI 10A 250V 8FT
401855-005	WIRE HARNESS 10A 125V 6.5FT
401855-006	WIRE HARNESS 10A 250V 6.5FT
401855-007	PWR CORD SWISS 10A 250V 8FT
401855-008	PWR CORD INDIAN 10A 250V 8FT
401855-009	DANISH 220VAC/50HZ,STRESS
401855-010	PWR CORD AUSTRALN 10A 250V 8FT
401855-101	PWR CORD 10A 8FT CONT EURO STR
401855-102	PWR CORD 10A 8FT BRITISH STR
401855-103	PWR CORD ITALIAN 10A 8FT STR
401855-104	PWR CORD ISRAELI 10A 8FT STR
401855-107	PWR CORD SWISS 10A 8FT STR
401855-108	PWR CORD INDIAN 10A 8FT STR
401855-109	PWR CORD DANISH 10A 8FT STR
401855-110	PWR CORD AUST 10A 8FT STR
401855-201	POWER CORD 16A EURO
401855-202	POWER CORD 13A BRITISH
401855-203	POWER CORD 16A ITALIAN
401855-204	POWER CORD 16A ISRAELI
401855-210	POWER CORD 15A AUST
405535-002	CORD POWER STR 125V 15A 12FT
405535-006	CORD POWER RA 125V 13A 10FT
5509-001	CORD POWER 18-3 SJT
405535-001	POWER CORD RA 125V 13A 12F
414582-222	POWER ADAPTER 230VAC/DC ME
414582-224	POWER ADAPTER 240VAC/DC AA
414582-225	POWER ADAPTER 240VAC/DC UK
415359-001	PWR CRD EURO ADAPTER 1FT
414582-223	POWER ADAPTER 100VAC/DC JAP
FSHRD_LANG	LANGUAGE PTO OPTION CLASS MUSE FILE SERVER HARDWARE
901073-003	KIT MUSE USER INTFC FILE SRVR

Item Number	Item Description
901073-004	KIT MUSE USER FSRVR GER
901073-005	KIT MUSE USER FSRVR FRE
901073-006	KIT MUSE USER FSRVR ITA
901073-007	KIT MUSE USER FSRVR SPA
901073-008	KIT MUSE USER FSRVR SWE
901073-009	KIT MUSE USER FSRVR DUT
419931-012	MUSE FIELD SERVICE MANUAL 5A
FSHRD_AS_PARTS	MUSE FILE SRVR AUTOSLCT PARTS PTO OPT CLASS
405864-011	ASSY MUSE NTWK WRTR
405864-012	ASSY MUSE NTWK WRTR 220-240V
405864-013	ASSY MUSE NTWK WRTR 240V BRIT
408230-008	LABEL CE MARK
408472-202	UPS 120V 60HZ 1.5KVA W/SER CBL
408997-001	CBL 10BASE-T UTP 15FT
411374-203	UPS 220V 1.5KVA W/SER CBL
415847-003	MUSE CV SYS EDITING VIDEO NTSC
419931-032	MUSE RAID 5A INSTALL INST
421520-001	DRV HARD DISK 9.1GB SCSI PL
421572-020	UPS, 3KVA, 208-240V
421860-001	CD REQ MUSE COMPAQ RAID SYS
6511-008	PWR STRIP 15A 125V 6 OUTLETS
800080-005	PCB 34010 WRITER
900124-701	MUSE TOWER FILE SERVER
900623-001	KIT LSR PRNTR PS2 100-120V
901074-001	KIT MUSE 9GB HARD DRIVE
901107-101	COMPAQ SERVER ASSY
901107-102	COMPAQ SERVER ASSY W/UPS 120V
901107-103	COMPAQ SERVER ASSY W/UPS 220V
901124-001	KIT MUSE DAT TAPES/LBLS/CLNG
421572-015	UPS, 3KVA
419931-010	MUSE 5A INSTALLATION INSTRUCT

Item Number	Item Description
414582-201	HUB LINKBUILDER TP/8 10BT 120V
414582-203	HUB OFFICECONN TP/8 10BT 120V
415359-001	PWR CRD EURO ADAPTER 1FT
415359-003	PWR CORD ADAPTER 1FT ASTL/NZEA
415359-004	PWR CORD ADAPTER 1FT UK

FSSFT (Rev A)

Item Number	Item Description
FSSFT_SFTWR_VER	FSSFT SOFTWARE VERSION PTO OPT CLASS
2000392-001	KIT MUSE (10) CONCURRENT USERS 5A
2000392-002	KIT MUSE(20)CONCURRENT USERS 5A
2000392-003	KIT MUSE (50) CONCURRENT USERS 5A
2000392-004	KIT MUSE (100) CONCURRENT USERS 5A
FSSFT_5A_SFTWR	FSSFT 5A SOFTWARE MODULES
2000392-005	KIT MUSE [10] CONCURRENT USERS 5B
2000392-006	KIT MUSE [20] CONCURRENT USERS 5B
2000392-007	KIT MUSE [50] CONCURRENT USERS 5B
2000392-008	KIT MUSE [100] CONCURRENT USERS 5B
FSSFT_5B_SFTWR	FSSFT 5B SOFTWARE MODULES
FSSFT_PROCDR_MOD	FSSFT PROCEDURE MODULES PTO OPT CLASS
417516-001	ECG RESTING MODULE MUSE
417516-002	SERIAL COMPARISON MODULE MUSE
417516-004	EXERCISE MODULE MUSE
417516-005	ECHO MODULE MUSE
417516-006	NUCLEAR MODULE MUSE
417516-008	EP MODULE MUSE
417516-009	PACEMAKER MODULE MUSE
417516-010	HOLTER MODULE MUSE
417516-011	CHEST PAIN MODULE MUSE
417516-012	PRE HOSPITAL MODULE MUSE
417516-013	SURGERY MODULE MUSE
417516-014	HISTORY/PHYSICAL MODULE MUSE
417516-015	DISCHARGE SUMMARY MODULE MUSE
FSSFT_CATH_DATA_STOR	FSSFT CATH DATA STORAGE
FSSFT_CATH_ADMIN	FSSFT CATH ADMINISTRATION
FSSFT_MNGMNT_MOD	FSSFT MANAGEMENT MODULES PTO OPT CLASS

Item Number	Item Description
MUSE_CV_DB_APP	MUSE CV DATABASE APP
FSSFT_CV_WORD	FSSFT CARDIO VASCULAR WORD
417516-019	INVENTORY MODULE MUSE
417516-020	SCHEDULING MODULE MUSE
901206-001	KIT MUSE ACC REGISTRY DRV/SW
FSSFT_ACCESS_MOD	FSSFT ACCESS MODULES PTO OPT CLASS
FSSFT_WEB	MUSE CV WEB SFTWR
FSSFT_MESSAGING	MUSE CV MESSAGING SFTWR
FSSFT_API	MUSE CV API SFTWR
FSSFT_CATH_NTWK	FSSFT CATHLAB NTWK CONFIG PTO OPT CLASS
MLAB_TCP/IP_NBEUI	MACLAB (TCP/IP AND NETBEUI)
MIDAS_TCP/IP	MIDAS TCP/IP
MLAB_MIDAS	MACLAB AND MIDAS (TCP/IP AND NETBEUI)
419719-001	DISK MUSE OPTIONS DISK
3727-304	DISKETTE 3.5IN DS HD SGLE/BULK
70362-007	LABEL DISKETTE-RED PMS 201
419720-001	CODE MUSE OPTIONS DISK
FSSFT_AS_PARTS	FSSFT AUTO SELECT PARTS PTO OPT CLASS
2000424-001	KIT MUSE CV DATABASE APP 5A ENG
2000424-002	KIT MUSE CV DATABASE APP 5B ENG
417087-037	MUSE CV WORD TRAINING VIDEO
419931-005	CARDIOWINDOW OP MANUAL 005A
900958-112	KIT CARDIOWINDOW ADMIN 5A
901020-101	KIT MUSEWORD SERVER 5A
901020-201	KIT MUSEWORD SERVER 5B
901080-001	KIT MUSE CV WEB
901207-001	KIT MUSE API SFTWR 5B
901147-001	KIT MUSE MESSAGING 5A
900958-201	KIT CARDIOWINDOW ADMIN 5B ENG
416057-001	INSTROMEDIX/MUSE INTRFC INST
2001215-001	KIT OPTION MUSE MESSAGING 5B

CLHRD (Rev A)

Item Number	Item Description
CLHRD_LANG	MUSE CLIENT HARDWARE LANGUAGE PTO OPTION CLASS
901073-003	KIT MUSE USER INTFC FILE SRVR
901073-004	KIT MUSE USER FSRVR GER
901073-005	KIT MUSE USER FSRVR FRE
901073-006	KIT MUSE USER FSRVR ITA
901073-007	KIT MUSE USER FSRVR SPA
901073-008	KIT MUSE USER FSRVR SWE
901073-009	KIT MUSE USER FSRVR DUT
CLHRD_SYS_VER	MUSE CLIENT HRDWR SYS VER PTO OPT CLASS
CLHRD_5A_SYS	KIT MUSE CLIENT 5A SYSTEM
CLHRD_4B_SYS	MUSE CLIENT 4B SYSTEM
CLHRD_5B_SYS	KIT MUSE CLIENT 5B SYSTEM
CLHRD_PC_TYPE	MUSE CLIENT HRDWR PC TYPE PTO OPT CLASS
CLHRD_CLIENT_PC	CLIENT HRDWR CLIENT PC
CLHRD_GATEWAY	CLHRD CLIENT HRWR GATEWAY
CLHRD_CLIENT_MAC8	MUSE CLIENT W/MAC 8 ACQ
CLHRD_GTEWY_MAC8	MUSE CLIENT GATEWAY W/MAC
CLHRD_SMM_MDM_FAX	KIT CLIENT SMM W/MODEM AND FAX
CLHRD_SMM_2MDM_FAX	CLIENT SMM W/(2) MODEMS AND FAX
CLHRD_4B_COM_FAX	CLIENT 4B COM SRVR SDLC/FAX PTO OPT CLASS
CLHRD_4B_COM_FAX_MAC	CLIENT 4B COMM SRVR W/FAX/MAC PTO OPT CLASS
MUSE_MONITORS	MUSE MONITORS PTO OPTION CLASS
420609-001	MONITOR 15" COLOR 100-240V
408057-008	MONITOR 17" COLOR SONY
411937-004	MONITOR 21" COLOR SONY
CUST_SUPP_MON	CUSTOMER SUPPLIED MONITOR
CLHRD_WRITERS	CLHRD WRITERS PTO OPT CLASS
MUSE_WRTR_BRD	MUSE WRITER INTERFACE BOARD

Item Number	Item Description
MUSE_THRML_PRNTR_BRD	MUSE THERMAL PRINTER W/INTFC BRD
MUSE_LSR_PRNTR_BRD	MUSE LASER PRINTER 120V W/INTFC BRD
MUSE_LSR_PRNTR	MUSE LASER PRINTER 120V
CLHRD_ADDNTL_OPT	MUSE CLIENT HD ADDTNL OPT PTO OPT CLASS
CLHRD_CSI_MODEM	CLHRD CSI MODEM(S) PTO OPTION CLASS
MUSE_X-MODEM	MUSE X-MODEM (DEFIB) PTO OPT CLASS
CLHRD_DICTATION	MUSE CLIENT DICTATION PTO OPT CLASS
POWERCORDS	POWERCORD GENERIC PTO OPTION CLASS
80274-006	CORD PWR 125V 6FT STR
80274-004	CORD PWR 125V 6FT SE
401855-001	PWR CRD CONT EURO 10A 250V 8FT
401855-002	PWR CORD BRITISH 10A 250V 8FT
401855-003	PWR CORD ITALIAN 10A 250V 8FT
401855-004	PWR CORD ISRAELI 10A 250V 8FT
401855-005	WIRE HARNESS 10A 125V 6.5FT
401855-006	WIRE HARNESS 10A 250V 6.5FT
401855-007	PWR CORD SWISS 10A 250V 8FT
401855-008	PWR CORD INDIAN 10A 250V 8FT
401855-009	DANISH 220VAC/50HZ,STRESS
401855-010	PWR CORD AUSTRALN 10A 250V 8FT
401855-101	PWR CORD 10A 8FT CONT EURO STR
401855-102	PWR CORD 10A 8FT BRITISH STR
401855-103	PWR CORD ITALIAN 10A 8FT STR
401855-104	PWR CORD ISRAELI 10A 8FT STR
401855-107	PWR CORD SWISS 10A 8FT STR
401855-108	PWR CORD INDIAN 10A 8FT STR
401855-109	PWR CORD DANISH 10A 8FT STR
401855-110	PWR CORD AUST 10A 8FT STR
401855-201	POWER CORD 16A EURO
401855-202	POWER CORD 13A BRITISH
401855-203	POWER CORD 16A ITALIAN

Item Number	Item Description
401855-204	POWER CORD 16A ISRAELI
401855-210	POWER CORD 15A AUST
405535-002	CORD POWER STR 125V 15A 12FT
405535-006	CORD POWER RA 125V 13A 10FT
5509-001	CORD POWER 18-3 SJT
405535-001	POWER CORD RA 125V 13A 12F
414582-222	POWER ADAPTER 230VAC/DC ME
414582-224	POWER ADAPTER 240VAC/DC AA
414582-225	POWER ADAPTER 240VAC/DC UK
415359-001	PWR CRD EURO ADAPTER 1FT
414582-223	POWER ADAPTER 100VAC/DC JAP
CLHRD_AS_PARTS	CLIENT HRDWR AUTO SELCT PARTS PTO OPT CLASS
405835-009	ASSY MAC6/8 ACQ DESKSIDE
405835-010	ASSY MAC 6/8 ACQ DESKSIDE CE
407122-002	LABEL MUSE NETWORK WRITER
700081-002	HARNESS, MUSE COMI
700461-002	HARN MAC 8/MUSE WRITER SERIAL
800080-005	PCB 34010 WRITER
900129-501	MUSE NETWORK WORKSTATION 120V
900129-502	MUSE NETWORK WORKSTATION 220V
900135-501	MUSE COMMUNICATION SERVER
900266-103	PS/2 BARCODE WAND W/EDIT LABEL
900471-402	KIT NTWK MUSE TWISTED PAIR
900585-501	KIT TRAM 12SL GATEWAY
900585-601	KIT TRAM 12SL GATEWAY 5A
900680-501	MUSE GATEWAY
900684-003	KIT MUSE DIGIBOARD
900684-004	KIT MUSE DIGIBOARD
901078-001	KIT MUSE DISKETTE ACQ
901096-001	ASSY CABLE/BRACKET MAC8/MUSE
900135-502	MUSE COMMUNICATION SERVER CE

Item Number	Item Description
405864-011	ASSY MUSE NTWK WRTR
405864-012	ASSY MUSE NTWK WRTR 220-240V
405864-013	ASSY MUSE NTWK WRTR 240V BRIT
900623-001	KIT LSR PRNTR PS2 100-120V

CLSFT (Rev A1)

Item Number	Item Description
CLSFT_SYS_VER	CLIENT SFTWR VERSION PTO OPT CLASS
CLSFT_5A_SYS	CLIENT 5A SYSTEM SW PTO OPT CLASS
CLSFT_4B_SYS	CLSFT 4B SYSTEM SW PTO OPT CLASS
CLSFT_5B_SYS	CLIENT 5B SYS SFTWR PTO OPT CLASS
CLSFT_MMS_HRDWR	MUSE CLIENT TYPE PURC W/MMS HDWR PTO OPT CLASS
CLSFT_WS_SW1	CLIENT WS SW SFTWR
CLSFT_GTEWY_SW1	CLSFT GATEWAY SFTWR
CLSFT_GTEWY_WS_SW1	CLIENT GATEWAY WKSTN SOFTWARE
CLSFT_SMM_SW1	CLIENT SMM SOFTWARE
CLSFT_CSI_MDM_MOD1	CLIENT CSI MODEM MODULE SOFTWARE
CLSFT_4B_COMM_SRVR1	CLIENT 4B COMM SERVER SFTWR
CLSFT_CLNT_CSH_COPIES	CLSFT CLIENT SW COPIES CUST SUPP PTO OPT CLASS
CLSFT_(1)_CS_CSH	CLIENT SFTWR (1) CUST SUP HW
CLSFT_(2)_CS_CSH	CLIENT SFTWR (2) CUST SUP HW
CLSFT_(3)_CS_CSH	CLIENT SFTWR (3) CUST SUP HW
CLSFT_(4)_CS_CSH	CLIENT SFTWR (4) CUST SUP HW
CLSFT_(5)_CS_CSH	CLIENT SFTWR (5) CUST SUP HW
CLSFT_(6)_CS_CSH	CLIENT SFTWR (6) CUST SUP HW
CLSFT_(7)_CS_CSH	CLIENT SFTWR (7) CUST SUP HW
CLSFT_(8)_CS_CSH	CLIENT SFTWR (8) CUST SUP HW
CLSFT_(9)_CS_CSH	CLIENT SFTWR (9) CUST SUP HW
CLSFT_(10)_CS_CSH	CLIENT SFTWR (10) CUST SUP HW
CLSFT_(20)_CS_CSH	CLIENT SFTWR (20) CUST SUP HW
CLSFT_(50)_CS_CSH	CLIENT SFTWR (50) CUST SUP HW
CLSFT_(100)_CS_CSH	CLIENT SFTWR (100) CUST SUP HW
CLSFT_FULLWS_CSH	CLSFT FULL WRKSTA LIC 4B PTO OPT CLASS
CLSFT_(1)_WS_CSH	WRKSTN SFTWR (1) CUST SUPP HW
CLSFT_(2)_WS_CSH	WRKSTN SFTWR (2) CUST SUPP HW
CLSFT_(3)_WS_CSH	WRKSTN SFTWR (3) CUST SUPP HW

Item Number	Item Description
CLSFT_(4)_WS_CSH	WRKSTN SFTWR (4) CUST SUPP HW
CLSFT_(5)_WS_CSH	WRKSTN SFTWR (5) CUST SUPP HW
CLSFT_(6)_WS_CSH	WRKSTN SFTWR (6) CUST SUPP HW
CLSFT_(7)_WS_CSH	WRKSTN SFTWR (7) CUST SUPP HW
CLSFT_(8)_WS_CSH	WRKSTN SFTWR (8) CUST SUPP HW
CLSFT_(9)_WS_CSH	WRKSTN SFTWR (9) CUST SUPP HW
CLSFT_(10)_WS_CSH	WRKSTN SFTWR (10) CUST SUPP HW
CLSFT_(20)_WS_CSH	WRKSTN SFTWR (20) CUST SUPP HW
CLSFT_(50)_WS_CSH	WRKSTN SFTWR (50) CUST SUPP HW
CLSFT_(100)_WS_CSH	WRKSTN SFTWR (100) CUST SUPP HW
CLSFT_DSKTP_LIC	CLSFT DESKTOP LIC 4B CUST SUPP PTO OPT CLASS
CLSFT_(1)_DS_CSH	DESKTOP (1) CUST SUPP HW
CLSFT_(2)_DS_CSH	DESKTOP (2) CUST SUPP HW
CLSFT_(3)_DS_CSH	DESKTOP (3) CUST SUPP HW
CLSFT_(4)_DS_CSH	DESKTOP (4) CUST SUPP HW
CLSFT_(5)_DS_CSH	DESKTOP (5) CUST SUPP HW
CLSFT_(6)_DS_CSH	DESKTOP (6) CUST SUPP HW
CLSFT_(7)_DS_CSH	DESKTOP (7) CUST SUPP HW
CLSFT_(8)_DS_CSH	DESKTOP (8) CUST SUPP HW
CLSFT_(9)_DS_CSH	DESKTOP (9) CUST SUPP HW
CLSFT_(10)_DS_CSH	DESKTOP (10) CUST SUPP HW
CLSFT_(20)_DS_CSH	DESKTOP (20) CUST SUPP HW
CLSFT_(50)_DS_CSH	DESKTOP (50) CUST SUPP HW
CLSFT_(100)_DS_CSH	DESKTOP (1) CUST SUPP HW
CLSFT_CV_WORD_COPIES	CLSFT CV WORD COPIES PTO OPT CLASS
CLSFT_(1)_CV_WORD	MUSE WRKSTN (1) CV WORD
CLSFT_(2)_CV_WORD	MUSE WRKSTN (2) CV WORD
CLSFT_(3)_CV_WORD	MUSE WRKSTN (3) CV WORD
CLSFT_(4)_CV_WORD	MUSE WRKSTN (4) CV WORD
CLSFT_(5)_CV_WORD	MUSE WRKSTN (5) CV WORD
CLSFT_(6)_CV_WORD	MUSE WRKSTN (6) CV WORD

Item Number	Item Description
CLSFT_(7)_CV_WORD	MUSE WRKSTN (1) CV WORD
CLSFT_(8)_CV_WORD	MUSE WRKSTN (8) CV WORD
CLSFT_(9)_CV_WORD	MUSE WRKSTN (9) CV WORD
CLSFT_(10)_CV_WORD	MUSE WRKSTN (10) CV WORD

WSHW (Rev A1)

Item Number	Item Description
WSHW_LANG	LANGUAGE PTO OPTION CLASS HIS INTERFACE HARDWARE
901073-003	KIT MUSE USER INTFC FILE SRVR
901073-004	KIT MUSE USER FSRVR GER
901073-005	KIT MUSE USER FSRVR FRE
901073-006	KIT MUSE USER FSRVR ITA
901073-007	KIT MUSE USER FSRVR SPA
901073-008	KIT MUSE USER FSRVR SWE
901073-009	KIT MUSE USER FSRVR DUT
901073-012	KIT MUSE USER FSRVR ENGUK
MUSE_MONITORS	MUSE MONITORS PTO OPTION CLASS
420609-001	MONITOR 15" COLOR 100-240V
408057-008	MONITOR 17" COLOR SONY
411937-004	MONITOR 21" COLOR SONY
CUST_SUPP_MON	CUSTOMER SUPPLIED MONITOR
WSHW_WRITERS	HIS WRITERS PTO OPTION CLASS
900623-003	KIT LSR PRNTR W/WRTR BRD
800080-005	PCB 34010 WRITER
900623-001	KIT LSR PRNTR PS2 100-120V
WSHW_ETHRNT_BOARD	HIS ADDITIONAL ETHERNET BOARD
WSHW_CSI/MULTI_MDMS	HIS CSI/MULTI MODEMS PTO OPT CLASS
MUSE_CSI_MODEMS	MUSE CSI MODEMS PTO OPT CLASS
900192-001	KIT MODEM MUSE NETWORK
WSHW_SYS_VER	HIS WORKSTA SYS VERSN PTO OPT CLASS
WSHW_SYS_4B	HIS WRKSTA SYS 4B PTO OPT CLASS
WSHW_SYS_5A	HIS WRKSTA SYS 5A PTO OPT CLASS
WSHW_SYS_5B	HIS WRKSTA SYS 5B PTO OPT CLASS
MUSE_RSS_MODEMS	MUSE RSS MODEMS PTO OPT CLASS
900723-301	KIT MTECH MODEM EXT 56K 120V

Item Number	Item Description
900723-306	KIT MUSE MODEM 56K EXT UK
900723-308	KIT MUSE MODEM 56K EXT 220V
900723-312	KIT MTECH MODEM EXT 56K ASTL
900723-315	KIT MUSE MODEM 56K EXT BEL
900723-322	KIT MUSE MODEM 56K EXT JAP
900723-326	KIT MUSE MODEM 56K EXT NETH
900723-327	KIT MUSE MODEM 56K EXT NEW ZEA
900723-329	KIT MUSE MODEM 56K EXT POL
900723-337	KIT MUSE MODEM 56K EXT HKNG
900723-339	KIT MUSE MODEM 56K EXT SLVK
900723-340	KIT MUSE MODEM 56K EXT EURO/CE
700021-001	CABLE INTFC MAC LINK
1747-125	CONN PLUG D 25M,
1746-109	CONN RCPT D 9F
1800-301	CONTACT F 20G 24-20
1800-201	CONTACT M 20G 24-20
4901-003	CABLE 3 COND 3/22
1739-102	CONN COV 9PIN D
1739-104	CONN COV D 25 PIN
1747-999	CONN JACK SCREW-D (PKG OF 2)
4535-001	TIE WRAP 4.00LG X .125W
4533-201	SPLICE CE 22-14,
4899-002	WIRE 22 STRD BLACK
4899-003	WIRE 22 STRD RED
4899-004	WIRE 22 STRD GREEN
POWERCORDS	POWERCORD GENERIC PTO OPTION CLASS
80274-006	CORD PWR 125V 6FT STR
80274-004	CORD PWR 125V 6FT SE
401855-001	PWR CRD CONT EURO 10A 250V 8FT
401855-002	PWR CORD BRITISH 10A 250V 8FT
401855-003	PWR CORD ITALIAN 10A 250V 8FT

Item Number	Item Description
401855-004	PWR CORD ISRAELI 10A 250V 8FT
401855-005	WIRE HARNESS 10A 125V 6.5FT
401855-006	WIRE HARNESS 10A 250V 6.5FT
401855-007	PWR CORD SWISS 10A 250V 8FT
401855-008	PWR CORD INDIAN 10A 250V 8FT
401855-009	DANISH 220VAC/50HZ,STRESS
401855-010	PWR CORD AUSTRALN 10A 250V 8FT
401855-101	PWR CORD 10A 8FT CONT EURO STR
401855-102	PWR CORD 10A 8FT BRITISH STR
401855-103	PWR CORD ITALIAN 10A 8FT STR
401855-104	PWR CORD ISRAELI 10A 8FT STR
401855-107	PWR CORD SWISS 10A 8FT STR
401855-108	PWR CORD INDIAN 10A 8FT STR
401855-109	PWR CORD DANISH 10A 8FT STR
401855-110	PWR CORD AUST 10A 8FT STR
401855-201	POWER CORD 16A EURO
401855-202	POWER CORD 13A BRITISH
401855-203	POWER CORD 16A ITALIAN
401855-204	POWER CORD 16A ISRAELI
401855-210	POWER CORD 15A AUST
405535-002	CORD POWER STR 125V 15A 12FT
405535-006	CORD POWER RA 125V 13A 10FT
5509-001	CORD POWER 18-3 SJT
405535-001	POWER CORD RA 125V 13A 12F
414582-222	POWER ADAPTER 230VAC/DC ME
414582-224	POWER ADAPTER 240VAC/DC AA
414582-225	POWER ADAPTER 240VAC/DC UK
415359-001	PWR CRD EURO ADAPTER 1FT
414582-223	POWER ADAPTER 100VAC/DC JAP
WSHW_NTWK	HIS WRKSTA NETWORK PTO OPT CLASS
900471-402	KIT NTWK MUSE TWISTED PAIR

Item Number	Item Description
408997-001	CBL 10BASE-T UTP 15FT
700461-002	HARN MAC 8/MUSE WRITER SERIAL
4901-026	CABLE 28 AWG FLAT 26 COND
1803-126	CONN POL 26P F RBN
1746-225	CONN RCPT 25F RBN CA
1747-996	SOCKET JACKSCREW D CONN LONG
406978-005	BRACKET IBM G370
1746-209	CONN RCPT D 9F RBN CA
4901-110	CABLE 10 COND 28 AWG
1803-110	CONN POL 10P F
405721-004	ADAPTER ETHERNET 10/100 PCI
900471-202	KIT NTWK MUSE TWISTED PAIR
418295-001	ETHER EZ COMBO NETWORK ADAPTER
407122-004	LABEL MUSE NETWORK ETHER PORT
408997-001	CBL 10BASE-T UTP 15FT
414733-001	DISK SMC ETHERNET

D900124A MUSE Nightshade Integrated

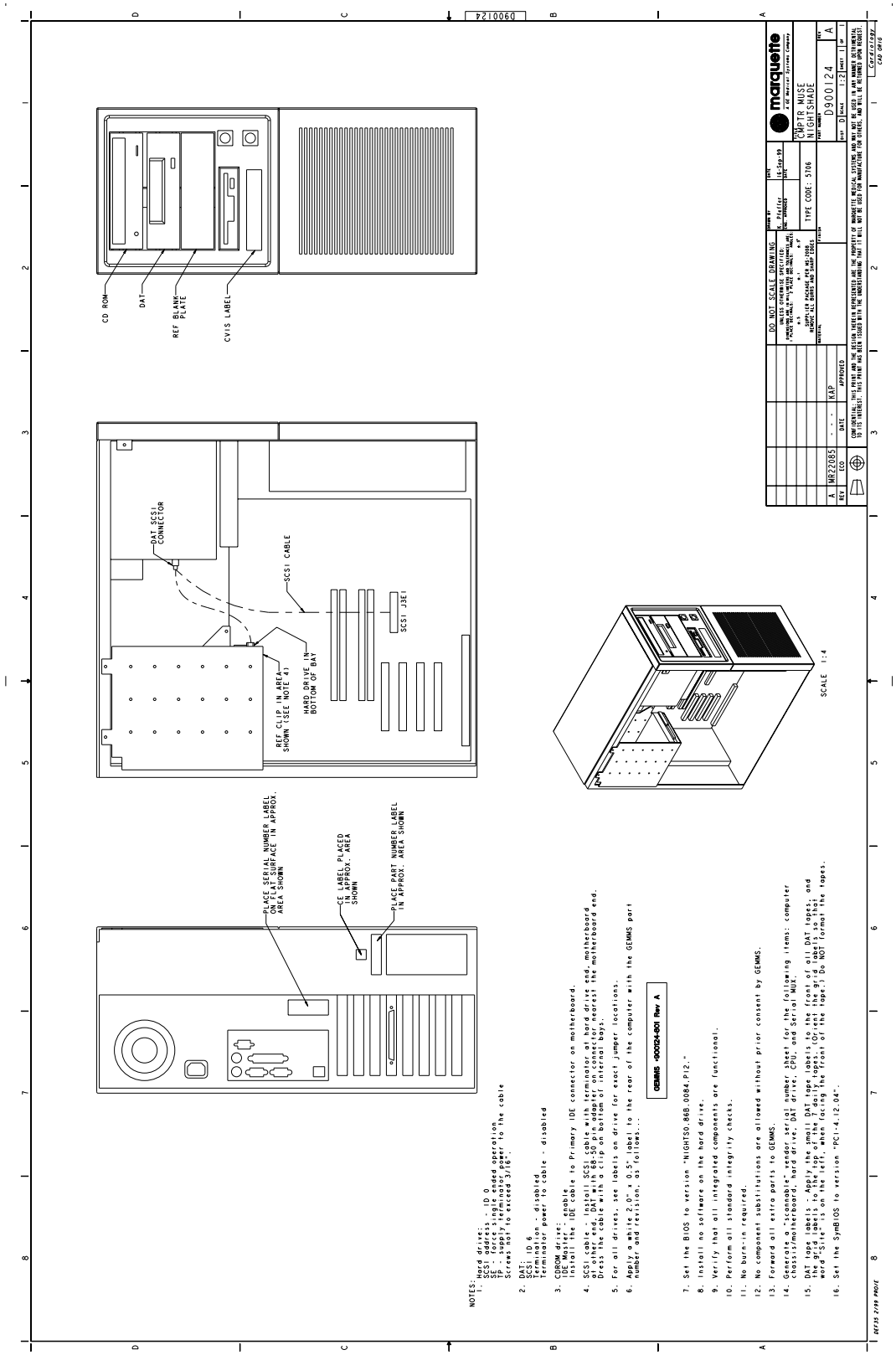

MUSE NIGHTSHADE INTEGRATED SERVER – PN 900124-801A			
Find Num	**Item Number**	**Item Description**	**Qty**
1	2001640-002	CMPTR SERVER NIGHTSHADE	1
2	2001640-003	CMPTR CPU P3-500	1
3	2001640-004	MEM 256MB DIMM PC100 ECC	1
4	2001640-005	DISK DRIVE 18GB LVD 1 INCH	1
5	2001640-006	DISK DRIVE CDROM 40X IDE SONY	1
6	2001640-007	CABLE RIBBON SCSI 68P W/ TERM 5CONN 3FT	1
7	2001640-008	TERMINATOR CPU SLOT 1	1
8	2001640-009	CABLE RIBBON IDE	1

Compaq Server Assy, 901107-1XX

COMPAQ SERVER ASSY – 901107-101A			
Item	**Part Number**	**Item Description**	**Qty**
1	421519-101	COMPAQ SERVER	1
	422402-001	COMPUTER PROLIANT 3000R 450MH	1
	422402-002	SDRAM DIMM KIT 128MB 10NS	1
	421572-003	DDS3 DAT DRIVE	1
	421572-004	SMART2DH RAID CONTROLLER	1
	421572-005	REDUNDANT POWER SUPPLY	1
	421572-006	REDUNDANT FAN KIT	1
	412946-005	ACCELEPORT 8R 920 SER MLTPLR	1
	414961-002	CABLE 8 PORT DB9M	1
	421572-012	KEYBOARD W/TRACKBALL	1
2	404525-001	LABEL BLANK 2 X 3/4	2
3	418201-001	LABEL MUSE CV INFO SYSTEM	1
4	404525-119	LABEL UID SOFTWARE	1

COMPAQ SERVER ASSY W/UPS 120V – 901107-102A			
Number	**Part Number**	**Item Description**	**Qty**
1	421519-102	COMPAQ SRVR W/RACK/UPS 100-120	1
	422402-001	COMPUTER PROLIANT 3000R 450MH	1
	422402-002	SDRAM DIMM KIT 128MB 10NS	1
	421572-003	DDS3 DAT DRIVE	1
	421572-004	SMART2DH RAID CONTROLLER	1
	421572-005	REDUNDANT POWER SUPPLY	1
	421572-006	REDUNDANT FAN KIT	1
	412946-005	ACCELEPORT 8R 920 SER MLTPLR	1
	414961-002	CABLE 8 PORT DB9M	1
	421572-008	RACK 22U, COMPAQ	1
	421572-009	KVM SWITCH 4 PORT	1
	421572-010	KVM CABLE SET	2
	421572-011	UTILITY SHELF	2
	421572-012	KEYBOARD W/TRACKBALL	1
	421572-013	KEYBOARD DRAWER	1
	418768-001	MODEM RACK 12 POSITION	1
	414582-201	HUB LINKBUILDER TP/8 10BT 120V	1

COMPAQ SERVER ASSY W/UPS 120V – 901107-102A (Continued)			
Number	**Part Number**	**Item Description**	**Qty**
	421572-015	UPS, 3KVA	1
2	404525-001	LABEL BLANK 2 X 3/4	2
3	418201-001	LABEL MUSE CV INFO SYSTEM	1
4	404525-119	LABEL UID SOFTWARE	1

COMPAQ SERVER ASSY W/UPS 220V – 901107-103A			
Item	**Item Number**	**Item Description**	**Qty**
1	421519-103	COMPAQ SRVR W/RACK/UPS 200-240	1
	422402-001	COMPUTER PROLIANT 3000R 450MH	1
	422402-002	SDRAM DIMM KIT 128MB 10NS	1
	421572-003	DDS3 DAT DRIVE	1
	421572-004	SMART2DH RAID CONTROLLER	1
	421572-005	REDUNDANT POWER SUPPLY	1
	421572-006	REDUNDANT FAN KIT	1
	412946-005	ACCELEPORT 8R 920 SER MLTPLR	1
	414961-002	CABLE 8 PORT DB9M	1
	421572-008	RACK 22U, COMPAQ	1
	421572-009	KVM SWITCH 4 PORT	1
	421572-010	KVM CABLE SET	2
	421572-011	UTILITY SHELF	2
	421572-012	KEYBOARD W/TRACKBALL	1
	421572-013	KEYBOARD DRAWER	1
	418768-001	MODEM RACK 12 POSITION	1
	414582-201	HUB LINKBUILDER TP/8 10BT 120V	1
	421572-020	UPS, 3KVA, 208-240V	1
2	404525-001	LABEL BLANK 2 X 3/4	2
3	418201-001	LABEL MUSE CV INFO SYSTEM	1
4	404525-119	LABEL UID SOFTWARE	1

1 of 4

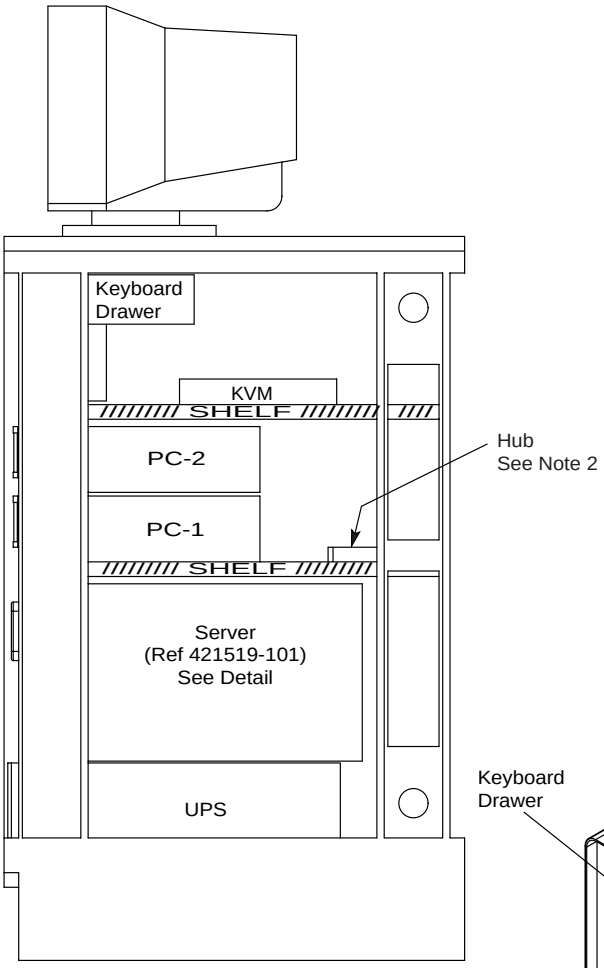

SIDE VIEW W/SIDE PANEL REMOVED
(See Note 1)

Notes:

1. To improve access to Rack Internals:
   Remove screws from front and rear corners of Side Panel. Remove Panel. For shipment, reinstall Side Panel.

2. To replace Ethernet Hub with Switch:
   A. Disconnect all Ethernet Cables from Hub.
   B. Remove Hub and Hub Power Adapter.
   C. Replace Hub with Switch and connect power.
   D. Reconnect Ethernet Cables to Switch.

For shipment, secure Switch with Tie Straps.

3. For the -002, and -003, place Label (Item3) on front door of rack, centered below the Compaq Logo as shown.

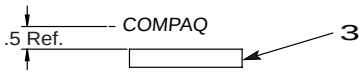

4. This drawing is part of a product OMAR Structure. Any dash numbers need to be added to the following drawing: "FSHRD-OMAR" see OMAR shop paper for final configuration.

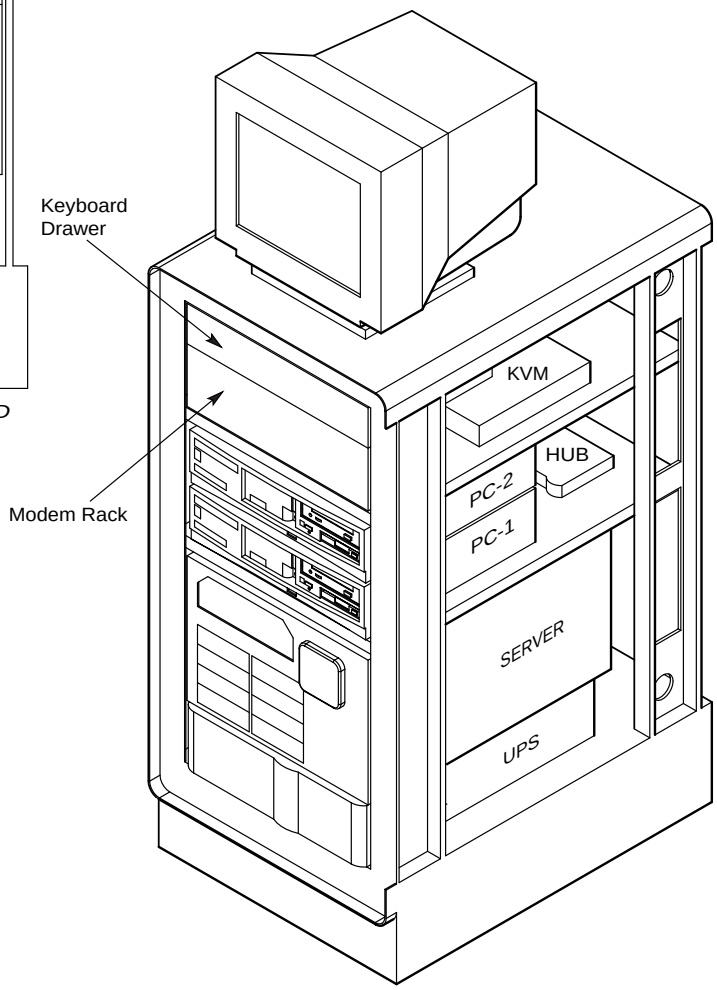

2 of 4

SERVER DETAIL
901107-101

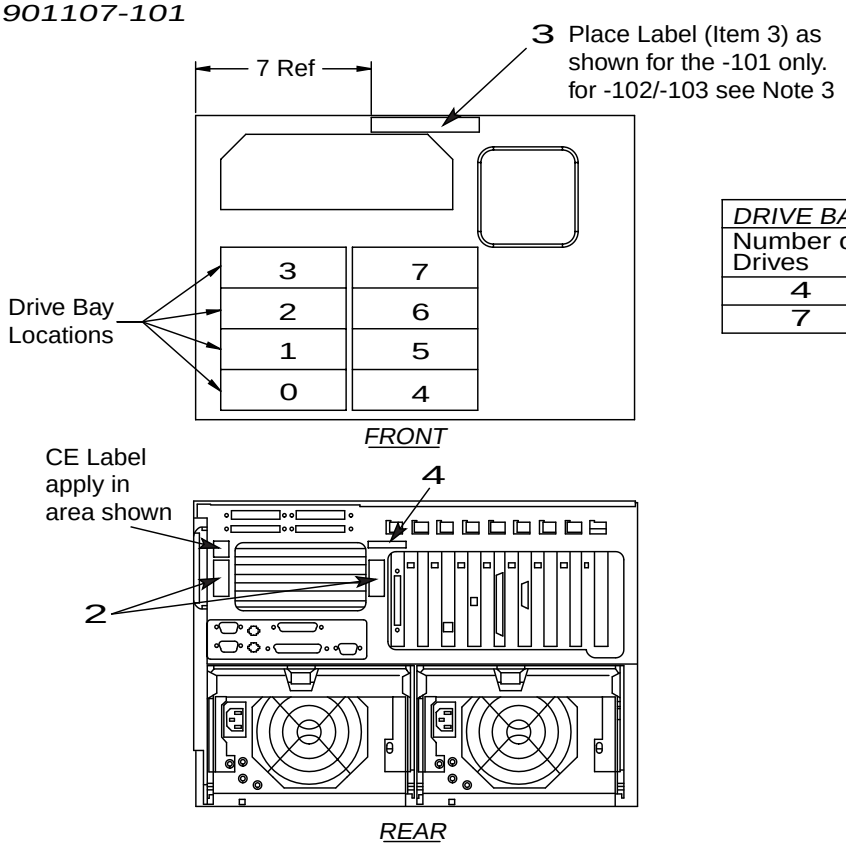

DRIVE BAY TABLE:	
Number of Drives	Bays to use
4	0-3
7	0-6

Hard Drive Installation:
Remove the necessary Drive Bay Filler Plates, and discard. Install the Hard Drives with the Logo facing up, per Drive Bay Table, and secure the Drive Latches.

To install Power Cords (-001 only):
1. Remove the Power Supply Protector Plate at the rear of the server. Reinstall parts for later.
2. For shipment, reinstall Plate.

Before powering the server:
1. Remove the Top Cover Panel and reseat all I/O Boards at rear of server.
2. Replace Cover.

For Shipment:
For each Drive, apply Label provided, to Right-Hand Drive Latch. Mark Label with appropriate Bay Number. Remove Drive from Server and pack separately.

3 of 4

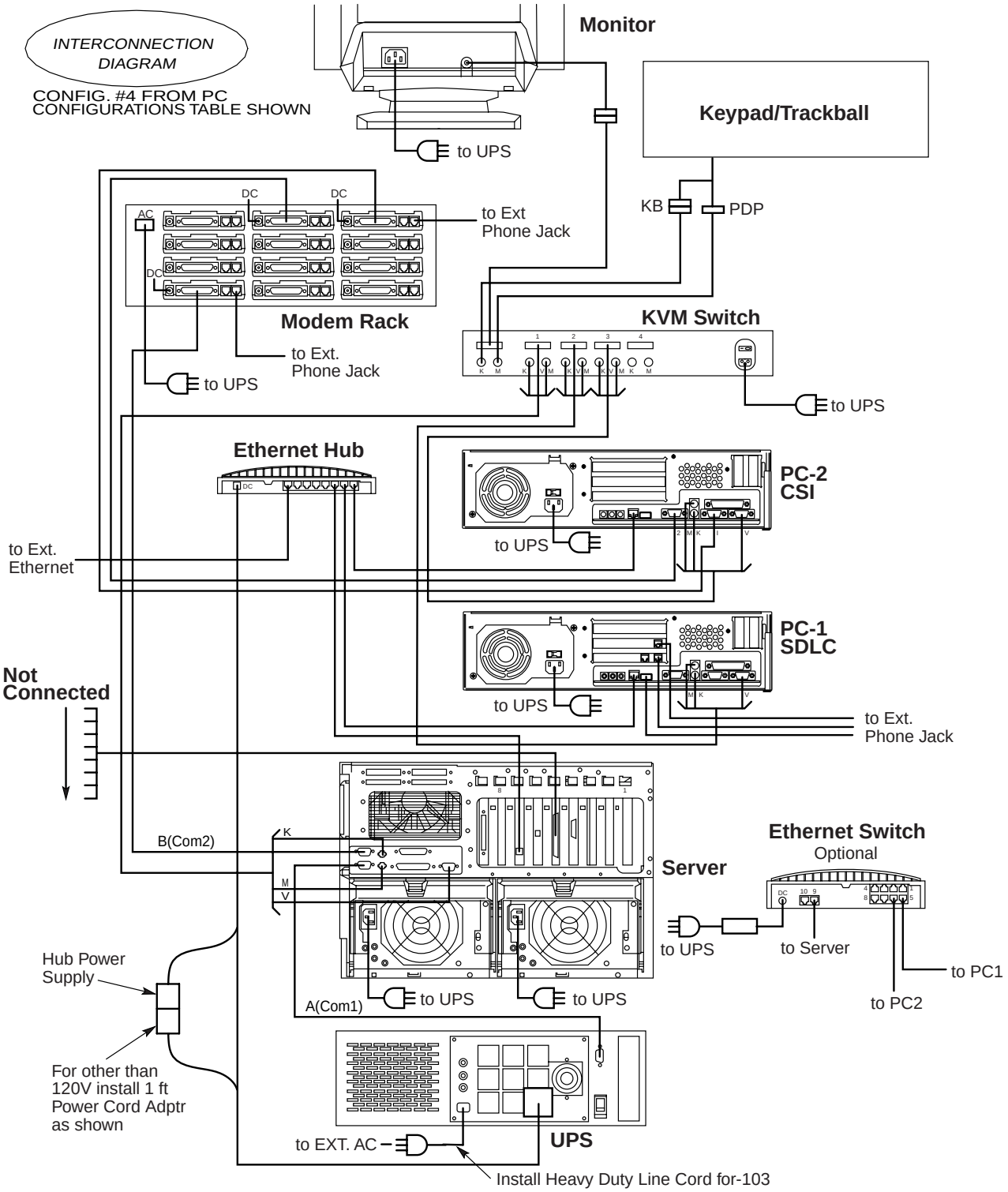
INTERCONNECTION DIAGRAM
CONFIG. #4 FROM PC CONFIGURATIONS TABLE SHOWN
Monitor
to UPS
Keypad/Trackball
KB
PDP
DC
DC
AC
DC
to Ext Phone Jack
Modem Rack
to Ext. Phone Jack
to UPS
KVM Switch
to UPS
Ethernet Hub
PC-2 CSI
to UPS
to Ext. Ethernet
PC-1 SDLC
to UPS
Not Connected
to Ext. Phone Jack
B(Com2)
K
M
V
Server
Ethernet Switch
Optional
to UPS
to Server
to PC1
to PC2
Hub Power Supply
A(Com1)
to UPS
to UPS
For other than 120V install 1 ft Power Cord Adptr as shown
to EXT. AC
UPS
Install Heavy Duty Line Cord for-103

4 of 4

MODEM DETAIL

Modem/PC Interconnections:			
PC Configs.	Modem Bay	Modem Type	Serial cable connects to...
1,2,5	12	RSS	Server - B(Com2)
3,4	1	CSI	PC1/PC2 - Com1
	2	CSI	PC1/PC2 - Com2
	12	RSS	Server - B(Com2)
6	1	CSI	PC1 - Com1
	2	CSI	PC1 - Com2
	3	CSI	PC2 - Com1
	4	CSI	PC2 - Com2
	12	RSS	Server - B(Com2)

To Install External Modems:
Set Modems in appropriate Bay per Modem Detail and connect per Modem/PC Interconnections Table. Secure Cables as shown in Modem Detail.

For Shipment:
Insert Packing Foam between Modems and Door to prevent vibrations.

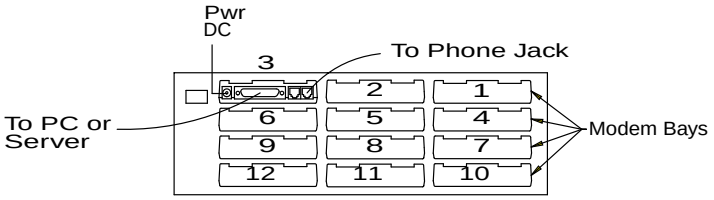

MODEM RACK (REAR VIEW)

PC DETAIL

To Install the 1st PC(PC-1)
Remove the Filler Plate from the front of the Rack in the PC-1 area. Set the PC on the Shelf, forward-facing, flush with the front of the Shelf. Connect the appropriate Cables provided (KVM #1 and Ethernet). Connect per Modem Detail and route Cables as shown per Cable routing views.

To Install the 2nd PC(PC-2)
Remove the Filler Plate from the front of the Rack in the PC-2 area. Set the PC-2 on top of PC-1, forward-facing, aligned with PC-1. Connect the appropriate Cables provided (KVM #2 and Ethernet). Connect per Modem Detail and route Cables as shown per Cable routing views.

For Shipment:
Disconnect all Cables from all PC's. Remove PC's from Rack and pack separately. Any Filler Plates should be shipped along with unit, not discarded.

PC Configurations:		
Config. #	PC Location	Function
1	PC2 PC1	Filler Plate Filler Plate
2	PC2 PC1	Filler Plate SDLC PC
3	PC2 PC1	Filler Plate CSI PC
4 (shown)	PC2 PC1	CSI PC SDLC PC
5	PC2 PC1	SDLC PC SDLC PC
6	PC2 PC1	CSI PC CSI PC

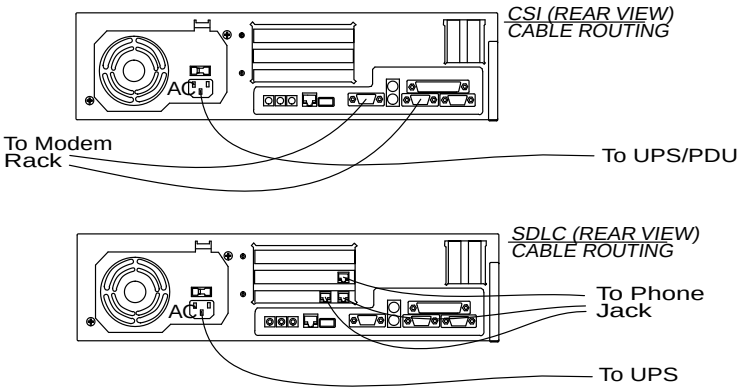

901070-001 (Rev E) MUSE Desktop Assembly

901070-001E MUSE Desktop Assembly			
Item	**Item Number**	**Item Description**	**Qty**
1	410783-201	COMPUTER ROCKAWAY DESKTOP	1
2	419793-002	SDRAM 32MB DIMM	1
3	2000714-001	DISK DRIVE HARD 4.3G ULTRA ATA EIDE 3.5	1
4	45074-608	SCREW BDGH 6-32X1/4	3
5	410784-105	DISK DRIVE CDROM 40X EIDE (NOT DVD)	1
6	404525-001	LABEL BLANK 2 X 3/4	1
7	420862-003	LABEL MUSE ROCKAWAY BOX POWER	1
8	418201-001	LABEL MUSE CV INFO SYSTEM	1

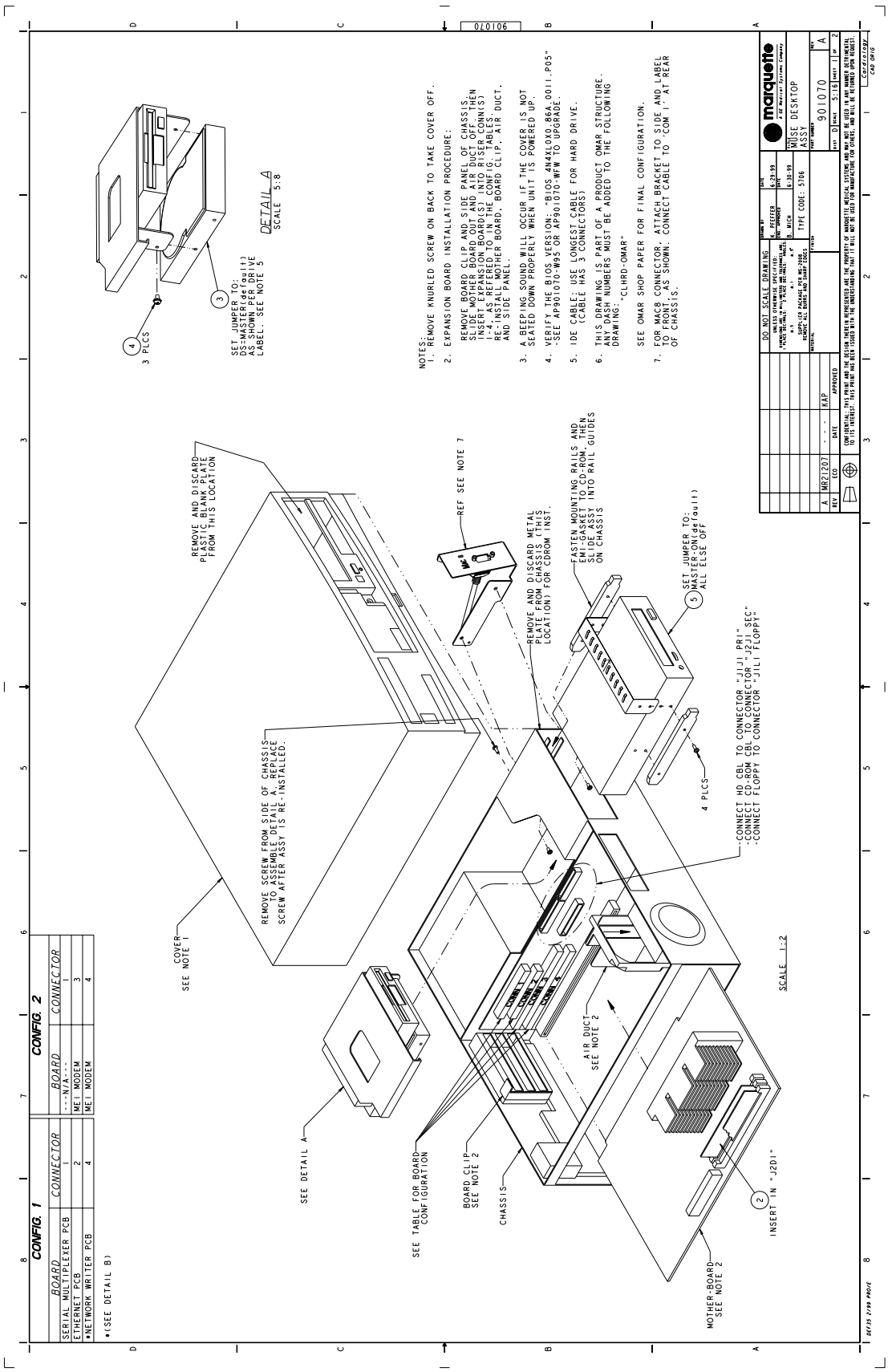
CONFIG. 1
BOARD
CONNECTOR
SERIAL MULTIPLEXER PCB
1
ETHERNET PCB
2
*NETWORK WRITER PCB
4
*(SEE DETAIL B)
CONFIG. 2
BOARD
CONNECTOR
---N/A---
1
MEI MODEM
3
MEI MODEM
4
DETAIL A
SCALE 5:8
3 PLCS
SET JUMPER TO:
DS-MASTER(default)
AS SHOWN FOR DRIVE
LABEL: SEE NOTE 5
NOTES:
1. REMOVE KNURLED SCREW ON BACK TO TAKE COVER OFF.
2. EXPANSION BOARD INSTALLATION PROCEDURE:
REMOVE BOARD CLIP AND SIDE PANEL OF CHASSIS.
SLIDE MOTHER BOARD OUT AND AIR DUCT OFF. THEN
INSERT EXPANSION BOARD(S) INTO RISER CONN(S)
1-4, AS REFERED TO IN THE CONFIG. TABLES
RE-INSTALL MOTHER BOARD, BOARD CLIP, AIR DUCT,
AND SIDE PANEL.
3. A BEEPING SOUND WILL OCCUR IF THE COVER IS NOT
SEATED DOWN PROPERLY WHEN UNIT IS POWERED UP.
4. VERIFY THE BIOS VERSION: "BIOS 4N4XL0X0.86A.0011.P05"
-SEE AP901070-W95 OR AP901070-WFW TO UPGRADE.
5. IDE CABLE: USE LONGEST CABLE FOR HARD DRIVE.
(CABLE HAS 3 CONNECTORS)
6. THIS DRAWING IS PART OF A PRODUCT OMAR STRUCTURE.
ANY DASH NUMBERS MUST BE ADDED TO THE FOLLOWING
DRAWING:
"CLHRD-OMAR"
SEE OMAR SHOP PAPER FOR FINAL CONFIGURATION.
7. FOR MAC8 CONNECTOR: ATTACH BRACKET TO SIDE AND LABEL
TO FOLLOW AS SHOWN. CONNECT CABLE TO "COM 1" AT REAR
OF CHASSIS.
REMOVE AND DISCARD
PLASTIC BLANK PLATE
FROM THIS LOCATION
REF SEE NOTE 7
REMOVE AND DISCARD METAL
PLATE FROM CHASSIS (THIS
LOCATION) FOR CDROM INST.
FASTEN MOUNTING RAILS AND
EMI-GASKET TO CD-ROM, THEN
SLIDE ASSY INTO RAIL GUIDES
ON CHASSIS
SET JUMPER TO:
MASTER-ON(default)
ALL ELSE OFF
REMOVE SCREW FROM SIDE OF CHASSIS
TO REMOVE DETAIL A PLACE
SCREW AFTER ASSY IS RE-INSTALLED.
COVER
SEE NOTE 1
4 PLCS
CONNECT HD CBL TO CONNECTOR "J1J1 PRI"
CONNECT CD-ROM CBL TO CONNECTOR "J2J1 SEC"
CONNECT FLOPPY TO CONNECTOR "J1L1 FLOPPY"
SEE DETAIL A
SEE TABLE FOR BOARD
CONFIGURATION
BOARD CLIP
SEE NOTE 2
CHASSIS
AIR DUCT
SEE NOTE 2
SCALE 1:2
INSERT IN "J2D1"
MOTHER-BOARD
SEE NOTE 2
DO NOT SCALE DRAWING
UNLESS OTHERWISE SPECIFIED:
DRAWN BY
K. PFEIFER
DATE
6-29-99
REVISIONS
A MR21207 - KAP
REV ECO DATE APPROVED
B. WEGE
6-30-99
TPK CODE: 5706
MATERIAL
FINISH
marquette
A GE Medical Systems Company
TITLE
MUSE DESKTOP
ASSY
PART NUMBER
901070
REV
A
SHEET 1 OF 1
Cardiology
CAD ORIG

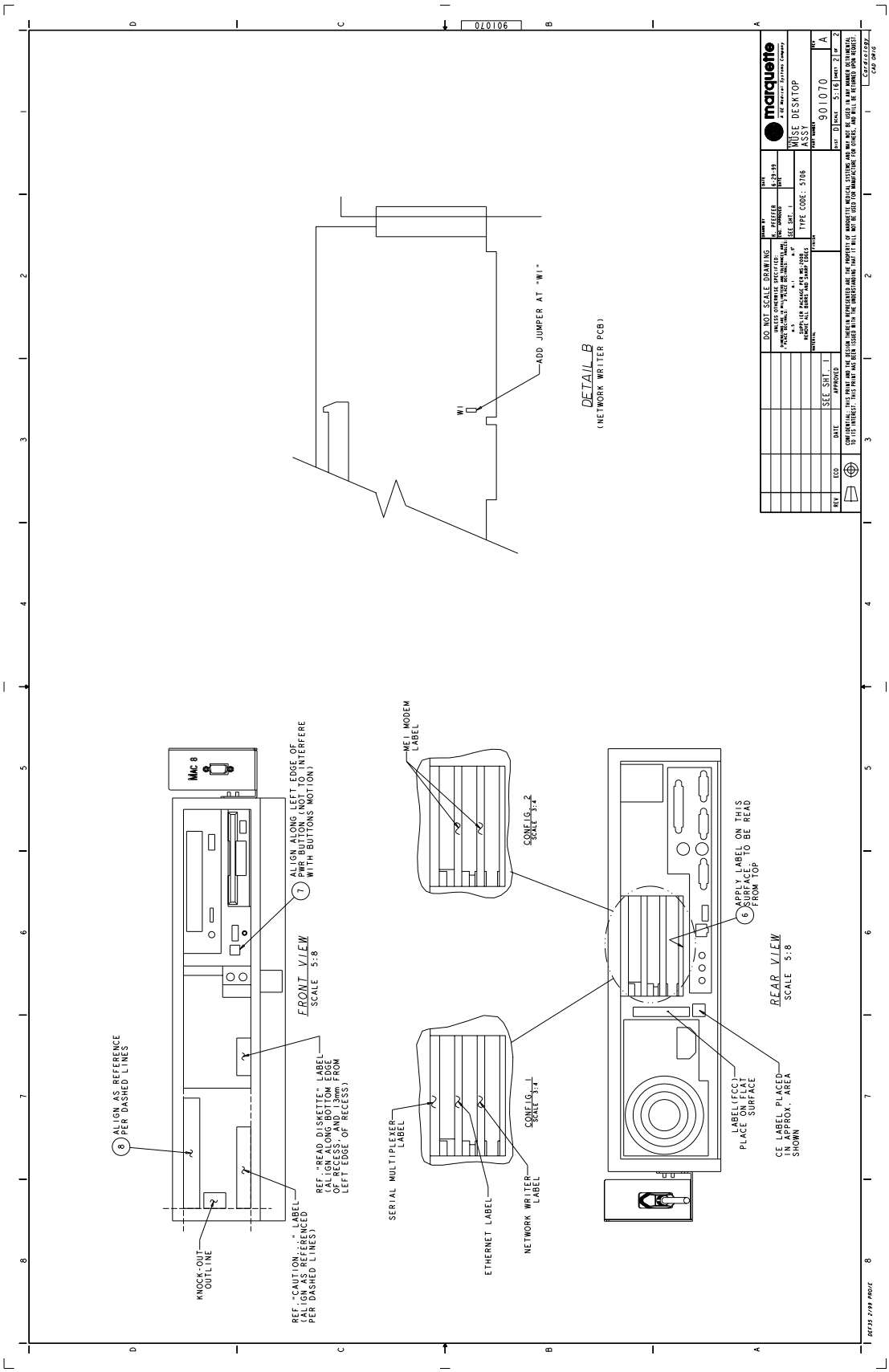
901070
DETAIL B
(NETWORK WRITER PCB)
ADD JUMPER AT "W1"
W1
FRONT VIEW
SCALE 5:8
ALIGN AS REFERENCE PER DASHED LINES
ALIGN ALONG LEFT EDGE OF PWR BUTTON (NOT TO INTERFERE WITH BUTTONS MOTION)
KNOCK-OUT OUTLINE
REF "CAUTION..." LABEL (ALIGN AS REFERENCED PER DASHED LINES)
REF "READ DISKETTE" LABEL (ALIGN ALONG BOTTOM EDGE OF RECESS AND 13mm FROM LEFT EDGE OF RECESS)
CONFIG...2
SCALE 3:4
MEI MODEM LABEL
CONFIG...1
SCALE 3:4
SERIAL MULTIPLEXER LABEL
ETHERNET LABEL
NETWORK WRITER LABEL
REAR VIEW
SCALE 5:8
APPLY LABEL ON THIS SURFACE TO BE READ FROM TOP
LABEL (FCC) PLACE ON FLAT SURFACE
CE LABEL PLACED IN APPROX. AREA SHOWN
DO NOT SCALE DRAWING
UNLESS OTHERWISE SPECIFIED
DRAWN BY
K. PEFFER
DATE
6-29-99
SEE SHEET 1
TYPE CODE: 5106
marquette
MUSE DESKTOP
ASSY
901070
A
SEE SHT. 1
APPROVED
DATE
ECO
REV
CAD ORIG

900135-501(Rev G) Communication Server

Item	Part Number	Item Description	Qty
1	410783-112	CMPTR INBUS 133MHZ 80MB ZAPPA	1
2	404525-001	LABEL BLANK 2 X 3/4	1
3	413739-001	LABEL SET MUSE	1
4	6121-218	DRIVE HARD DSK 2.1GB AT	1
5	900881-001	KIT MS-DOS 6.2 LIC/DISK	1
6	414752-001	CODE MUSE VENDOR	1
7	900881-004	KIT PCI VIDEO BOARD LIC/DISK	1
8	900881-011	KIT MUSE CD-ROM/DISK	1
9	900881-002	KIT WFW 3.1 LIC/DISK	1
10	45000-604	SCREW SEMS PH 6-32X1/4,	4

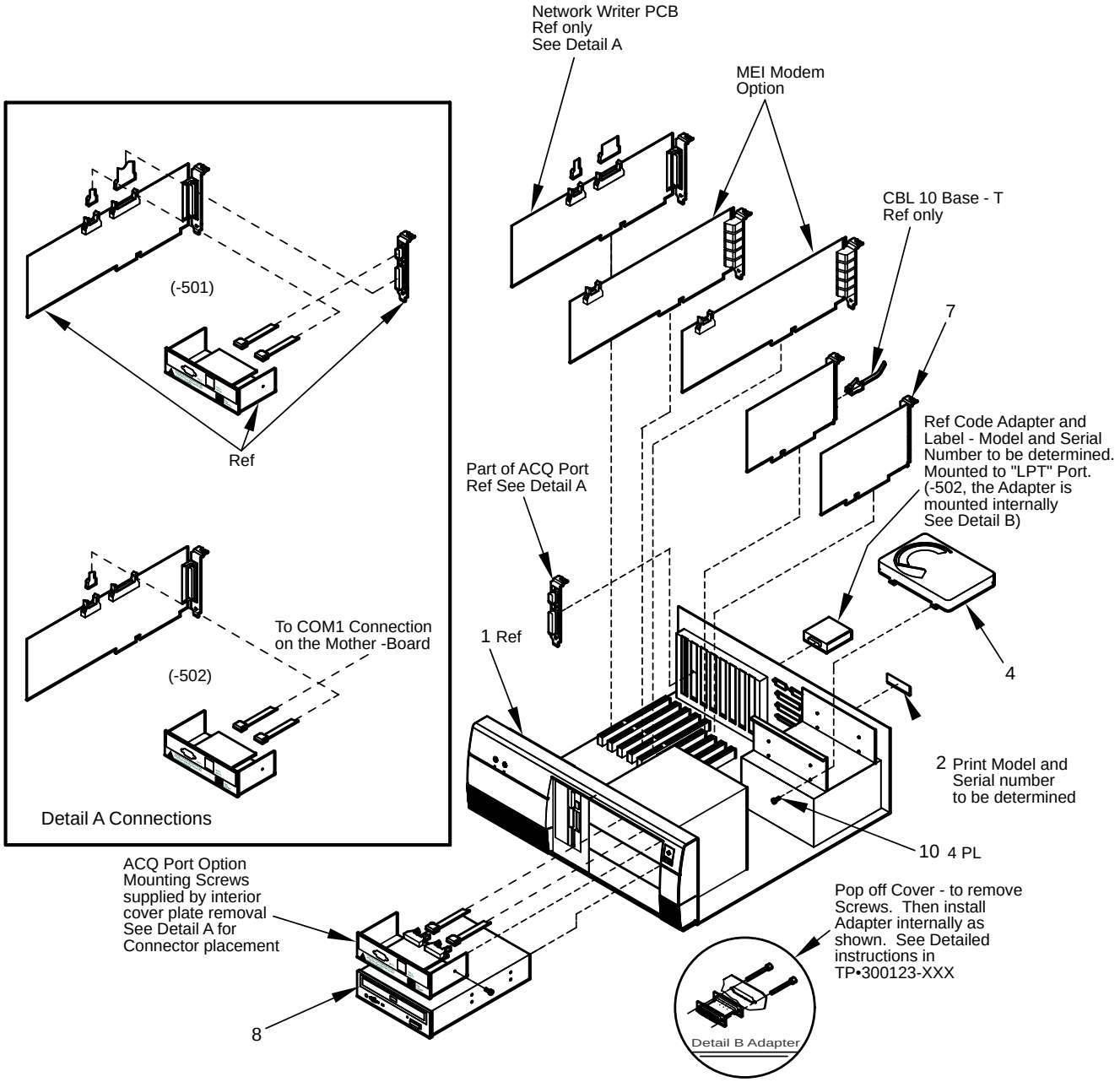
Network Writer PCB
Ref only
See Detail A
MEI Modem
Option
CBL 10 Base - T
Ref only
7
Ref Code Adapter and
Label - Model and Serial
Number to be determined.
Mounted to "LPT" Port.
(-502, the Adapter is
mounted internally
See Detail B)
Part of ACQ Port
Ref See Detail A
1 Ref
4
2 Print Model and
Serial number
to be determined
10 4 PL
(-501)
Ref
To COM1 Connection
on the Mother -Board
(-502)
Detail A Connections
ACQ Port Option
Mounting Screws
supplied by interior
cover plate removal
See Detail A for
Connector placement
8
Pop off Cover - to remove
Screws. Then install
Adapter internally as
shown. See Detailed
instructions in
TP•300123-XXX
Detail B Adapter

900680-501 (Rev G) MUSE Gateway

Item	Part Number	Item Description	Qty
1	410783-112	CMPTR INBUS 133MHZ 80MB ZAPPA	1
2	900881-011	KIT MUSE CD-ROM/DISK	1
3	6121-218	DRIVE HARD DSK 2.1GB AT	1
4	900881-001	KIT MS-DOS 6.2 LIC/DISK	1
5	900881-004	KIT PCI VIDEO BOARD LIC/DISK	1
8	900881-002	KIT WFW 3.1 LIC/DISK	1
9	413739-001	LABEL SET MUSE	1
10	404525-001	LABEL BLANK 2 X 3/4	1
11	414752-001	CODE MUSE VENDOR	1
12	45000-604	SCREW SEMS PH 6-32X1/4,	4

900129-5XX (Rev J) Network Workstation

900129-501 Rev J			
Item	**Part Number**	**Item Description**	**Qty**
1	410783-112	CMPTR INBUS 133MHZ 80MB ZAPPA	1
2	900881-004	KIT PCI VIDEO BOARD LIC/DISK	1
3	403590-199	MICROSOFT MOUSE	1
4	6121-218	DRIVE HARD DSK 2.1GB AT	1
5	900266-103	PS/2 BARCODE WAND W/EDIT LABEL	1
6	413739-001	LABEL SET MUSE	1
7	900881-001	KIT MS-DOS 6.2 LIC/DISK	1
8	900881-011	KIT MUSE CD-ROM/DISK	1
9	900881-002	KIT WFW 3.1 LIC/DISK	1
10	414752-001	CODE MUSE VENDOR	1
13	404525-001	LABEL BLANK 2 X 3/4	1
15	45000-604	SCREW SEMS PH 6-32X1/4,	4
16	900508-001	KIT MUSE KEYBOARD ENGLISH	1
19	422310-001	MOUSEPAD GE MARQUETTE	1

900129-502 Rev J			
Item	**Part Number**	**Item Description**	**Qty**
1	410783-112	CMPTR INBUS 133MHZ 80MB ZAPPA	1
2	900881-004	KIT PCI VIDEO BOARD LIC/DISK	1
3	403590-300	MOUSE, EMI	1
4	6121-218	DRIVE HARD DSK 2.1GB AT	1
5	900266-103	PS/2 BARCODE WAND W/EDIT LABEL	1
6	413739-001	LABEL SET MUSE	1
7	900881-001	KIT MS-DOS 6.2 LIC/DISK	1
8	900881-011	KIT MUSE CD-ROM/DISK	1
9	900881-002	KIT WFW 3.1 LIC/DISK	1
10	414752-001	CODE MUSE VENDOR	1
13	404525-001	LABEL BLANK 2 X 3/4	1
15	45000-604	SCREW SEMS PH 6-32X1/4,	4
16	900508-001	KIT MUSE KEYBOARD ENGLISH	1
19	422310-001	MOUSEPAD GE MARQUETTE	1

1 of 2

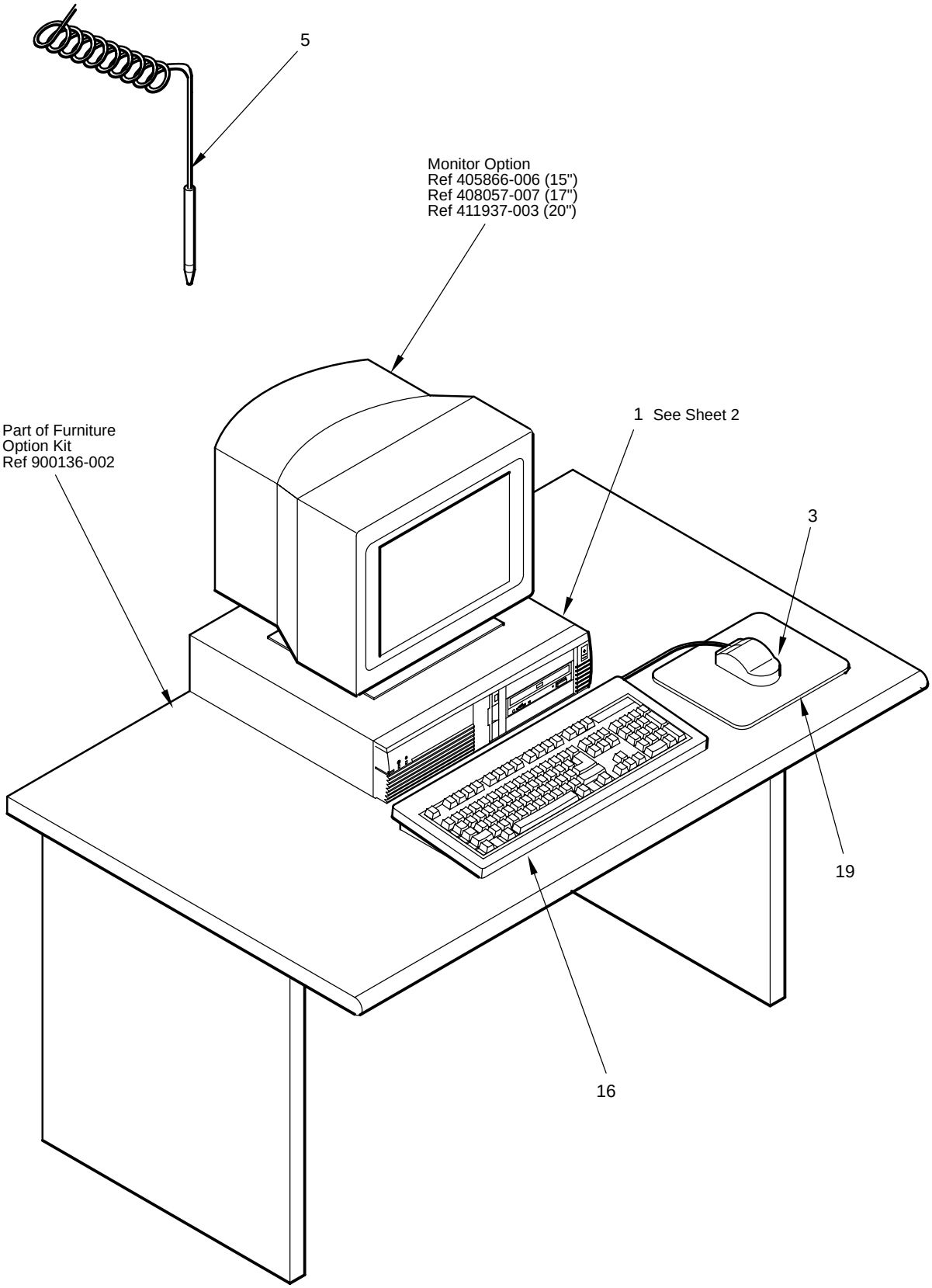
5
Monitor Option
Ref 405866-006 (15")
Ref 408057-007 (17")
Ref 411937-003 (20")
Part of Furniture
Option Kit
Ref 900136-002
1 See Sheet 2
3
19
16

2 of 2

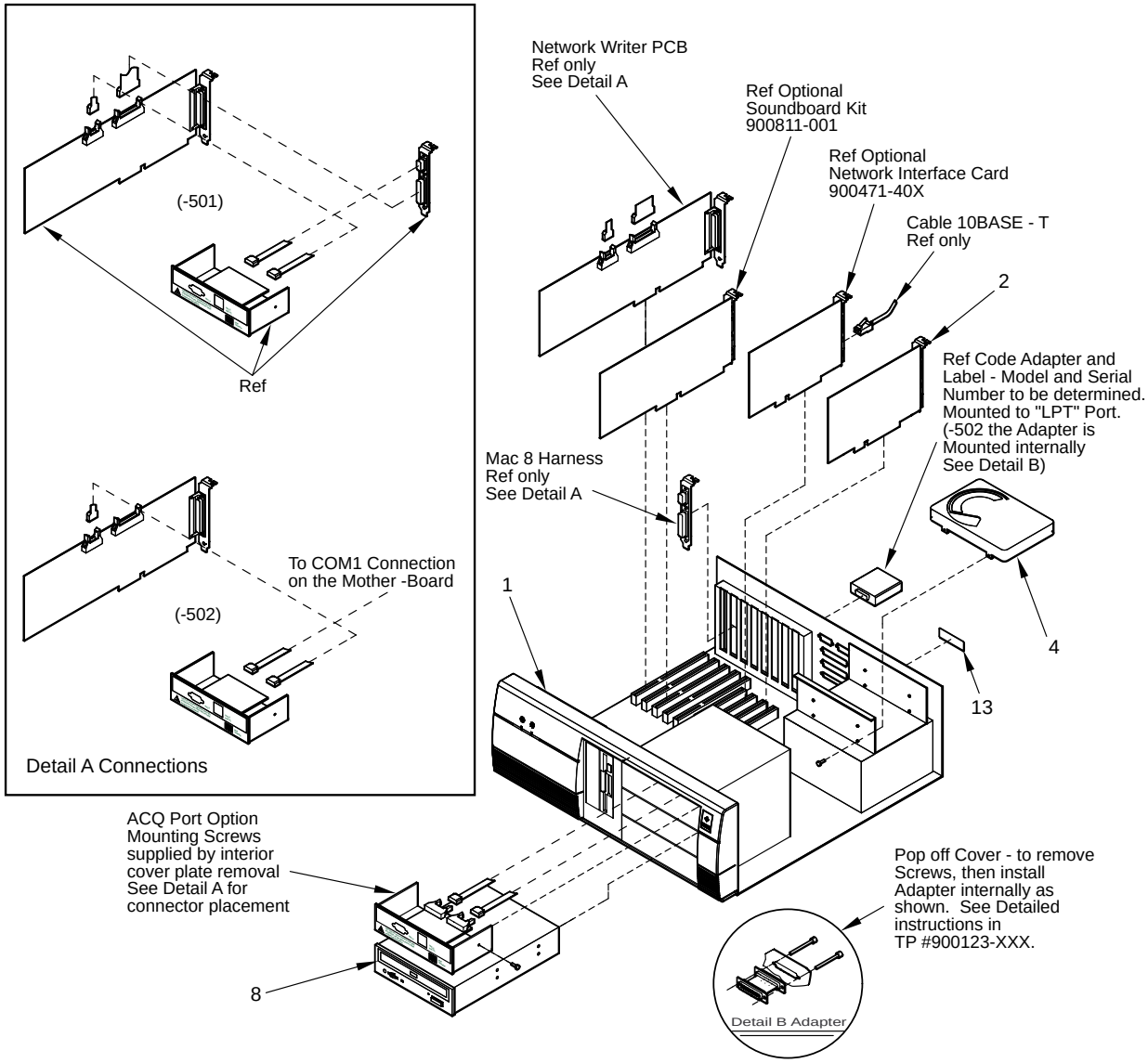
(-501)
Ref
(-502)
To COM1 Connection on the Mother -Board
Detail A Connections
Network Writer PCB Ref only See Detail A
Ref Optional Soundboard Kit 900811-001
Ref Optional Network Interface Card 900471-40X
Cable 10BASE - T Ref only
2
Ref Code Adapter and Label - Model and Serial Number to be determined. Mounted to "LPT" Port. (-502 the Adapter is Mounted internally See Detail B)
Mac 8 Harness Ref only See Detail A
1
4
13
ACQ Port Option Mounting Screws supplied by interior cover plate removal See Detail A for connector placement
8
Pop off Cover - to remove Screws, then install Adapter internally as shown. See Detailed instructions in TP #900123-XXX.
Detail B Adapter

405864-011 (Rev A) Network Writer Assembly

Item	Part Number	Item Description	Qty
1	1903-006	CONN FUSE HLDR/SW/IEC .10 PNL	1
2	400303-104	WRITER ASSEMBLY MAC VU	1
4	401493-001	FOOT RUBBER .75DIA 8-32THD	4
5	402019-001	SCREW 100FLHD 4-40 X 3/8	8
6	404525-001	LABEL BLANK 2 X 3/4	1
8	4528-005	CLAMP CORD SMALL	1
9	405715-001	BEZEL MUSE NTWK WRTR	1
10	405820-001	LABEL LED MUSE NETWORK WRTR	1
11	405874-001	INSULATOR MUSE WRTR PWR SPLY	1
12	405875-001	PWR SPLY 15V 110W SWITCHER	1
13	4520-806	WASHER LOCK EXT/INT #6	1
16	45000-606	SCREW SEMS PH 6-32 X 3/8,	4
17	45046-810	SCR PHIL FLH 8-32 X 5/8 SS	2
18	45074-408	SCREW BDGH 4-40 X 1/4,	3
19	45074-608	SCREW BDGH 6-32X1/4	12
20	45142-002	HINGE INVISIBLE SOSS 101	2
22	4521-706	NUT HEX KEPS 6-32,	2
23	4550-031	WASHER BELLEVILLE .56X.19X.028	2
24	4641-606	SCREW BLK PH 6-32 X 3/8,	4
25	4640-808	SCREW BLK W/WSHR 8-32 X 1/2	4
26	80307-053	WIRE, 16GA GRN/YEL 4L	1
27	58016-004	TRAY PAPER MUSE WRITER	1
28	58017-002	BUTTON PPR TRAY MTG CASE 15	2
29	420310-001	S/OFF 3/8 HEX 1.63 LG 8-32F/F	4
30	420311-001	S/OFF 3/8 HEX 2.00 LG 8-32F/F	1
31	700083-001	CBL INT PWR MUSE WRTR	1
33	800118-001	PCB MUSE WRTR MOT CONT	1
34	800120-001	PCB MUSE WRTR LED	1
36	700111-001	CBL PWR/PWR SPLY MUSE WRTR	1
39	80616-001	CABLE 10 COND RBN 11IN	1
40	80862-002	CABLE PWR DIST MUSE NTWK WRTR	1
42	4520-004	WASHER FLAT SS #4,	1
43	4502-410	SCREW PH 4-40 X 5/16,	1
44	88114-006	CBL DOOR OPT SNSR MUSE WRTR	1
45	420447-001	BRACKET SENSOR	1
46	420287-001	KIT METAL MUSE NTWK WRTR	1
47	408230-008	LABEL CE MARK	1
48	4656-406	SPACER M/F 4-40 X 0.375	3
49	80307-041	WIRE 16GA BROWN 2.5L	1

Item	Part Number	Item Description	Qty
51	4851-070	ADHESIVE LOCKTITE 425	.01
52	700145-001	CABLE MUSE WRITER INTCON	1
53	1910-212	FUSE 3AG 2 1/2A SB	2
54	9402-024	PAPER CHART 155MM FF CASE/8-STRESS	1
55	407200-001	ASSY BOX MUSE NTWK WRTR	1
56	406831-001	HANDLE WRITER DOOR	1
57	411780-002	BUTTON WRITER MAC 6/15/VU MAX1	1

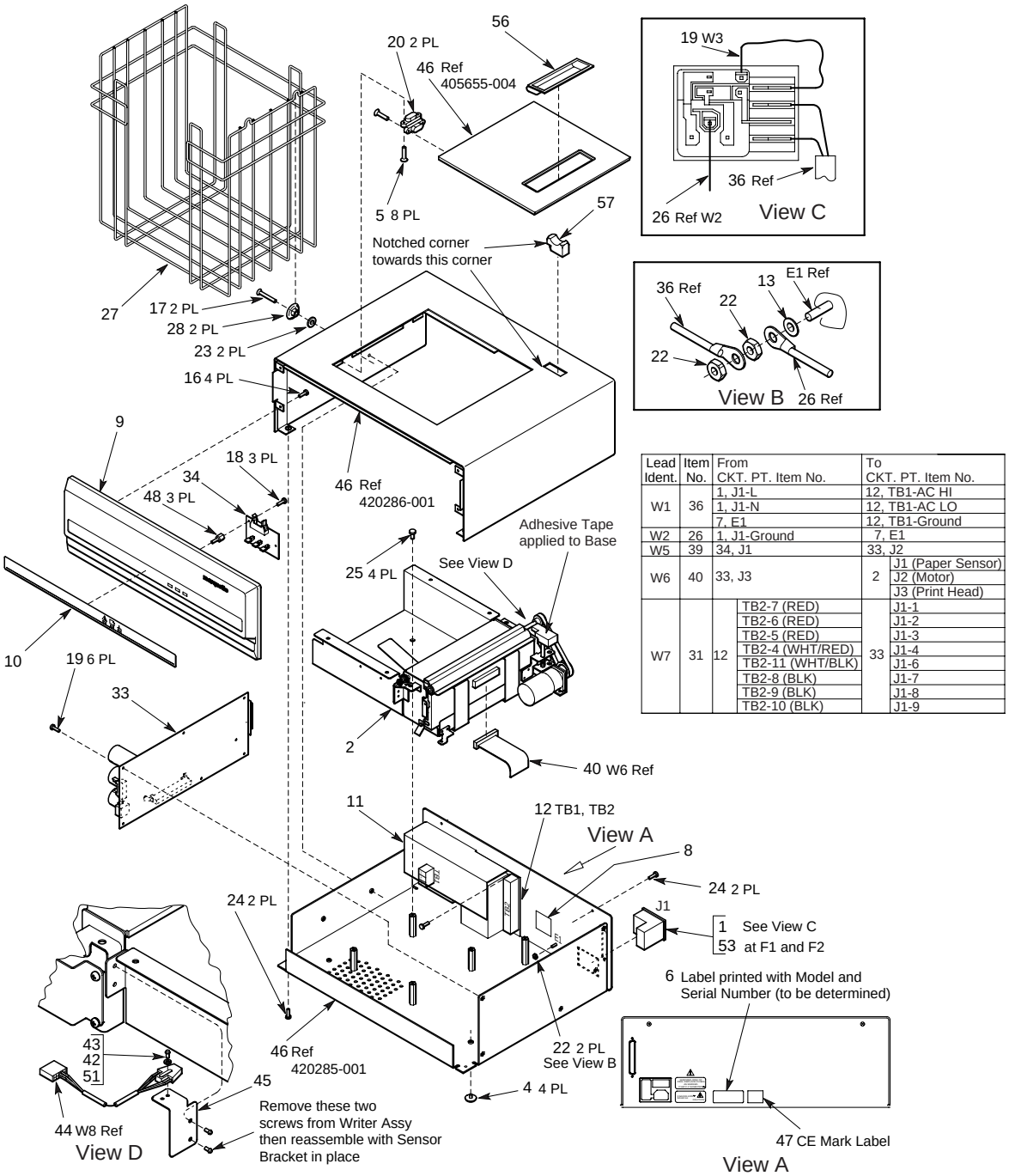

Lead Ident.	Item No.	From CKT. PT. Item No.		To CKT. PT. Item No.	
W1	36	1, J1-L		12, TB1-AC HI	
		1, J1-N		12, TB1-AC LO	
		7, E1		12, TB1-Ground	
W2	26	1, J1-Ground		7, E1	
W5	39	34, J1		33, J2	
W6	40	33, J3		2	J1 (Paper Sensor)
					J2 (Motor)
					J3 (Print Head)
W7	31	12	TB2-7 (RED)	33	J1-1
			TB2-6 (RED)		J1-2
			TB2-5 (RED)		J1-3
			TB2-4 (WHT/RED)		J1-4
			TB2-11 (WHT/BLK)		J1-6
			TB2-8 (BLK)		J1-7
			TB2-9 (BLK)		J1-8
			TB2-10 (BLK)		J1-9

405864-012 (Rev A) Network Writer Assembly (220-240V)

Item	Part Number	Item Description	Qty
1	1903-006	CONN FUSE HLDR/SW/IEC .10 PNL	1
2	400303-104	WRITER ASSEMBLY MAC VU	1
4	401493-001	FOOT RUBBER .75DIA 8-32THD	4
5	402019-001	SCREW 100FLHD 4-40 X 3/8	8
6	404525-001	LABEL BLANK 2 X 3/4	1
8	4528-005	CLAMP CORD SMALL	1
9	405715-001	BEZEL MUSE NTWK WRTR	1
10	405820-001	LABEL LED MUSE NETWORK WRTR	1
11	405874-001	INSULATOR MUSE WRTR PWR SPLY	1
12	405875-001	PWR SPLY 15V 110W SWITCHER	1
13	4520-806	WASHER LOCK EXT/INT #6	1
14	412084-004	SPACER A4 .05 THK MAC15/6/VU	1
15	412084-003	SPACER A4 .125 THK MAC15/6/VU	1
16	45000-606	SCREW SEMS PH 6-32 X 3/8,	4
17	45046-810	SCR PHIL FLH 8-32 X 5/8 SS	2
18	45074-408	SCREW BDGH 4-40 X 1/4,	3
19	45074-608	SCREW BDGH 6-32X1/4	12
20	45142-002	HINGE INVISIBLE SOSS 101	2
21	412203-001	SCREW, FLT HD M3 X 8MM LG,	2
22	4521-706	NUT HEX KEPS 6-32,	2
23	4550-031	WASHER BELLEVILLE .56X.19X.028	2
24	4641-606	SCREW BLK PH 6-32 X 3/8,	4
25	4640-808	SCREW BLK W/WSHR 8-32 X 1/2	4
26	80307-053	WIRE, 16GA GRN/YEL 4L	1
27	58016-004	TRAY PAPER MUSE WRITER	1
28	58017-002	BUTTON PPR TRAY MTG CASE 15	2
29	420310-001	S/OFF 3/8 HEX 1.63 LG 8-32F/F	4
30	420311-001	S/OFF 3/8 HEX 2.00 LG 8-32F/F	1
31	700083-001	CBL INT PWR MUSE WRTR	1
33	800118-001	PCB MUSE WRTR MOT CONT	1
34	800120-001	PCB MUSE WRTR LED	1
36	700111-001	CBL PWR/PWR SPLY MUSE WRTR	1
39	80616-001	CABLE 10 COND RBN 11IN	1
40	80862-002	CABLE PWR DIST MUSE NTWK WRTR	1
42	4520-004	WASHER FLAT SS #4,	1
43	4502-410	SCREW PH 4-40 X 5/16,	1
44	88114-006	CBL DOOR OPT SNSR MUSE WRTR	1
45	420447-001	BRACKET SENSOR	1
46	420287-001	KIT METAL MUSE NTWK WRTR	1

Item	Part Number	Item Description	Qty
47	408230-008	LABEL CE MARK	1
48	4656-406	SPACER M/F 4-40 X 0.375	3
49	80307-041	WIRE 16GA BROWN 2.5L	1
51	4851-070	ADHESIVE LOCKTITE 425	.01
52	700145-001	CABLE MUSE WRITER INTCON	1
53	1908-160	FUSE METRIC 1.6A SL0-BLO	2
54	9402-021	CHART PAPER 195MM A4 FF CASE/8	1
55	407200-001	ASSY BOX MUSE NTWK WRTR	1
56	406831-001	HANDLE WRITER DOOR	1
57	411780-002	BUTTON WRITER MAC 6/15/VU MAX1	1

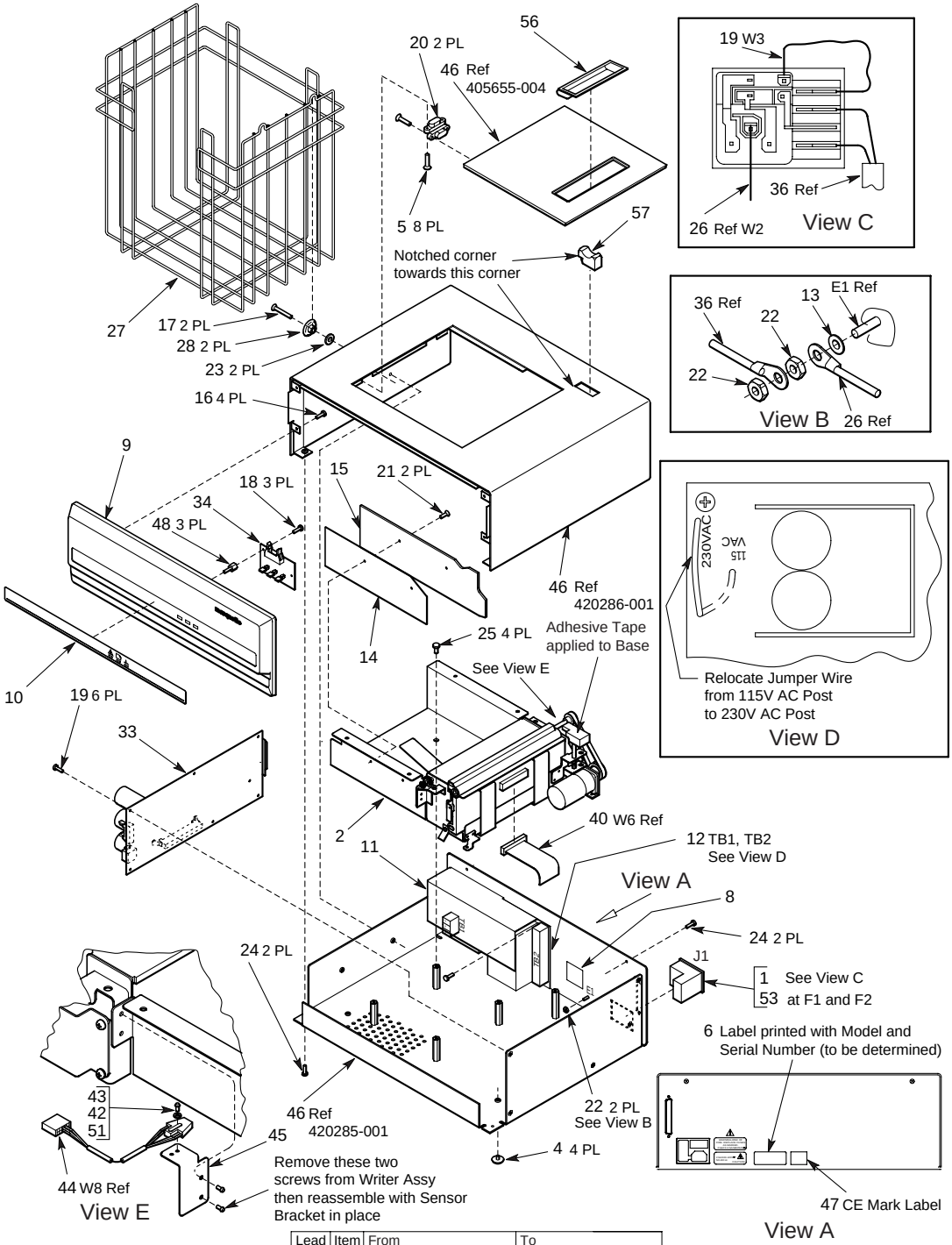

Lead Ident.	Item No.	From CKT. PT. Item No.		To CKT. PT. Item No.	
W1	36	1, J1-L		12, TB1-AC HI	
		1, J1-N		12, TB1-AC LO	
		7, E1		12, TB1-Ground	
W2	26	1, J1-Ground		7, E1	
W5	39	34, J1		33, J2	
W6	40	33, J3		2	J1 (Paper Sensor)
					J2 (Motor)
					J3 (Print Head)
W7	31	12	TB2-7 (RED)	33	J1-1
			TB2-6 (RED)		J1-2
			TB2-5 (RED)		J1-3
			TB2-4 (WHT/RED)		J1-4
			TB2-11 (WHT/BLK)		J1-6
			TB2-8 (BLK)		J1-7
			TB2-9 (BLK)		J1-8
			TB2-10 (BLK)		J1-9

405864-013 Rev A) Network Writer Assembly (240 V) Brit

Item	Item Number	Item Description	Qty
1	1903-006	CONN FUSE HLDR/SW/IEC .10 PNL	1
2	400303-104	WRITER ASSEMBLY MAC VU	1
4	401493-001	FOOT RUBBER .75DIA 8-32THD	4
5	402019-001	SCREW 100FLHD 4-40 X 3/8	8
6	404525-001	LABEL BLANK 2 X 3/4	1
8	4528-005	CLAMP CORD SMALL	1
9	405715-001	BEZEL MUSE NTWK WRTR	1
10	405820-001	LABEL LED MUSE NETWORK WRTR	1
11	405874-001	INSULATOR MUSE WRTR PWR SPLY	1
12	405875-001	PWR SPLY 15V 110W SWITCHER	1
13	4520-806	WASHER LOCK EXT/INT #6	1
14	412084-004	SPACER A4 .05 THK MAC15/6/VU	1
15	412084-003	SPACER A4 .125 THK MAC15/6/VU	1
16	45000-606	SCREW SEMS PH 6-32 X 3/8,	4
17	45046-810	SCR PHIL FLH 8-32 X 5/8 SS	2
18	45074-408	SCREW BDGH 4-40 X 1/4,	5
19	45074-608	SCREW BDGH 6-32X1/4	12
20	45142-002	HINGE INVISIBLE SOSS 101	2
21	412203-001	SCREW, FLT HD M3 X 8MM LG,	2
22	4521-706	NUT HEX KEPS 6-32,	2
23	4550-031	WASHER BELLEVILLE .56X.19X.028	2
24	4641-606	SCREW BLK PH 6-32 X 3/8,	4
25	4640-808	SCREW BLK W/WSHR 8-32 X 1/2	4
26	80307-053	WIRE, 16GA GRN/YEL 4L	1
27	58016-004	TRAY PAPER MUSE WRITER	1
28	58017-002	BUTTON PPR TRAY MTG CASE 15	2
29	420310-001	S/OFF 3/8 HEX 1.63 LG 8-32F/F	4
30	420311-001	S/OFF 3/8 HEX 2.00 LG 8-32F/F	1
31	700083-001	CBL INT PWR MUSE WRTR	1
33	800118-001	PCB MUSE WRTR MOT CONT	1
34	800120-001	PCB MUSE WRTR LED	1
36	700111-001	CBL PWR/PWR SPLY MUSE WRTR	1
39	80616-001	CABLE 10 COND RBN 11IN	1
40	80862-002	CABLE PWR DIST MUSE NTWK WRTR	1
42	4520-004	WASHER FLAT SS #4,	1
43	4502-410	SCREW PH 4-40 X 5/16,	1
44	88114-006	CBL DOOR OPT SNSR MUSE WRTR	1
45	420447-001	BRACKET SENSOR	1
46	420287-001	KIT METAL MUSE NTWK WRTR	1

Item	Item Number	Item Description	Qty
47	408230-008	LABEL CE MARK	1
48	4656-406	SPACER M/F 4-40 X 0.375	3
49	80307-041	WIRE 16GA BROWN 2.5L	1
50	401861-001	KIT LABELS MAC VU ST BR	1
51	4851-070	ADHESIVE LOCKTITE 425	.01
52	700145-001	CABLE MUSE WRITER INTCON	1
53	1908-160	FUSE METRIC 1.6A SL0-BLO	2
54	9402-021	CHART PAPER 195MM A4 FF CASE/8	1
55	407200-001	ASSY BOX MUSE NTWK WRTR	1
56	406831-001	HANDLE WRITER DOOR	1
57	411780-002	BUTTON WRITER MAC 6/15/VU MAX1	1

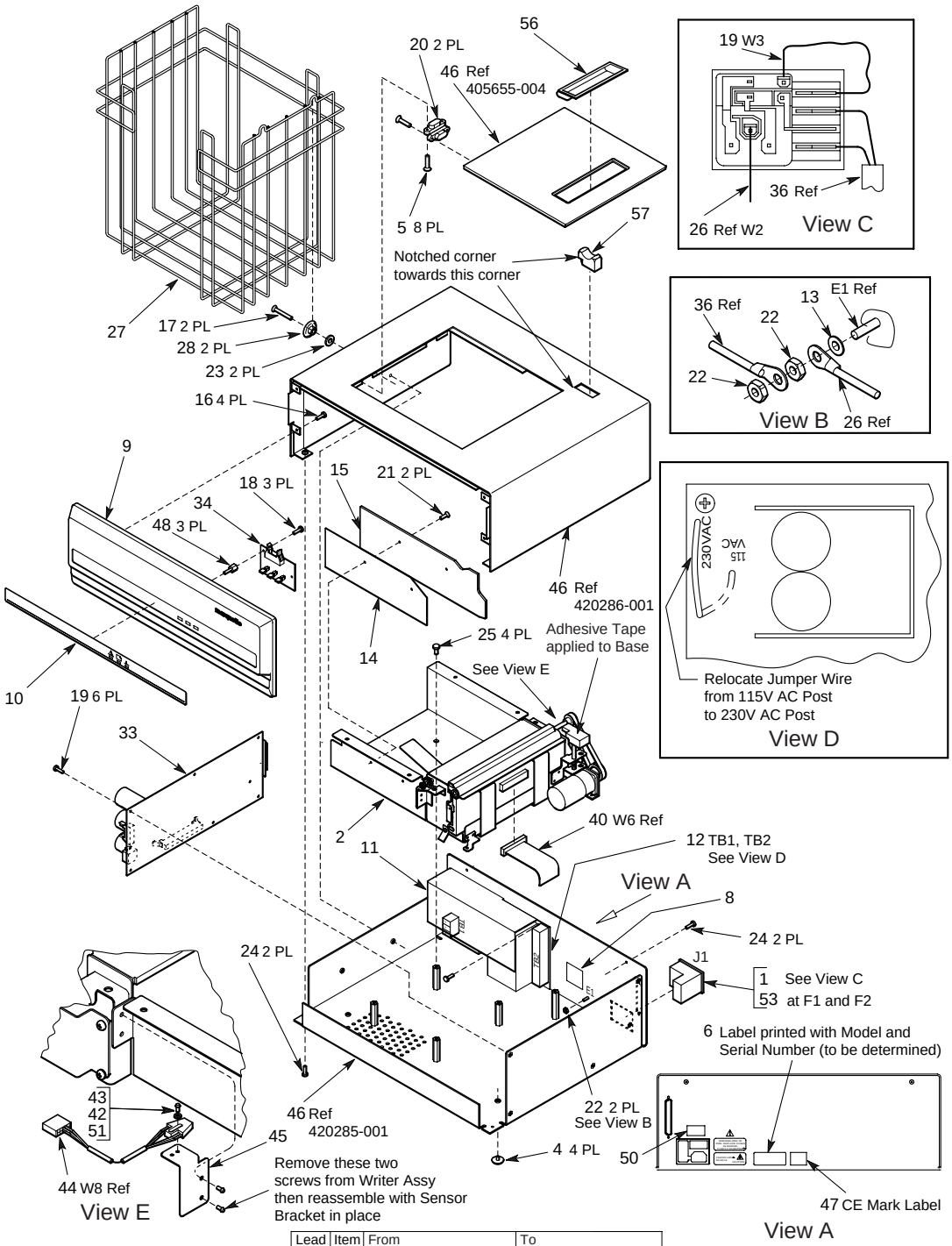

Lead Ident.	Item No.	From CKT. PT. Item No.	To CKT. PT. Item No.
W1	36	1, J1-L	12, TB1-AC HI
		1, J1-N	12, TB1-AC LO
		7, E1	12, TB1-Ground
W2	26	1, J1-Ground	7, E1
W5	39	34, J1	33, J2
W6	40	33, J3	2 J1 (Paper Sensor)
			J2 (Motor)
			J3 (Print Head)
W7	31	12 TB2-7 (RED)	33 J1-1
		TB2-6 (RED)	J1-2
		TB2-5 (RED)	J1-3
		TB2-4 (WHT/RED)	J1-4
		TB2-11 (WHT/BLK)	J1-6
		TB2-8 (BLK)	J1-7
		TB2-9 (BLK)	J1-8
		TB2-10 (BLK)	J1-9

400303-104 Rev C) 8-Inch Writer Assembly

Item	Item Number	Item Description	Qty
1	413453-002	WRITER SUB-ASSY MAC VU	1
2	411101-002	TRAY PPR CS216 MAC VU	1
3	411059-006	SCREW SEMS PH M3-.5X6 ZIN,	4
5	4520-006	WASHER FLAT SS #6,	4
6	57966-001	STRAP PAPER PULLER 12 IN WTR	1
7	57967-001	PLATE PAPER PULLER 12IN WTR	1
8	412203-001	SCREW, FLT HD M3 X 8MM LG,	2

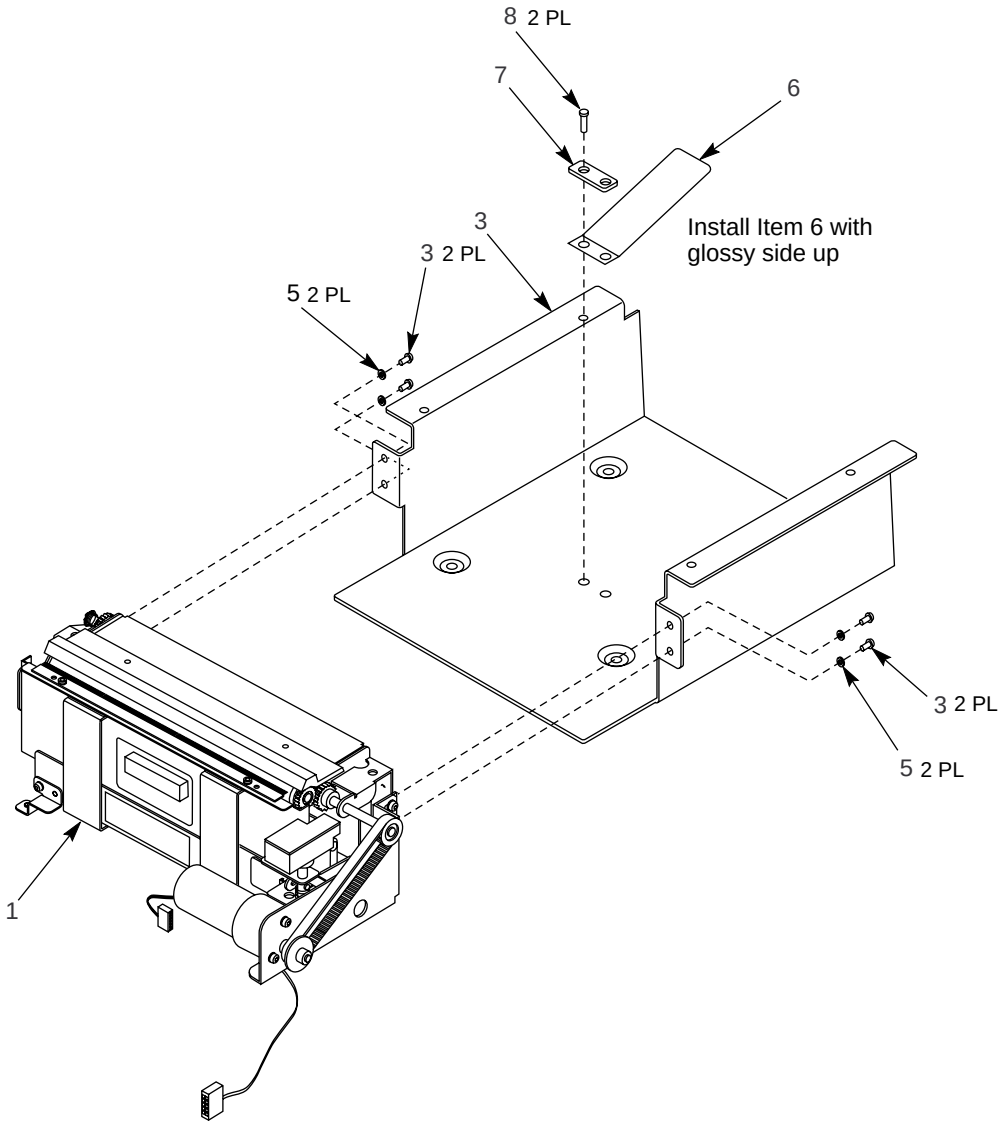

413453-002 Rev E) Writer Sub-Assembly

Item	Item Number	Item Description	Qty
2	413785-001	SCREW FLAT&EXTT SEMS M3 X 6	2
3	411864-001	TAPE - BUTTON UNIVERSAL	1
4	4534-905	TERM FASTON .25 DUAL 45 BLADES	2
5	415472-001	COVER ROLLER STAMPED C-SCAN	1
6	4616-001	PAD RBR BUMP .5 OD,	1

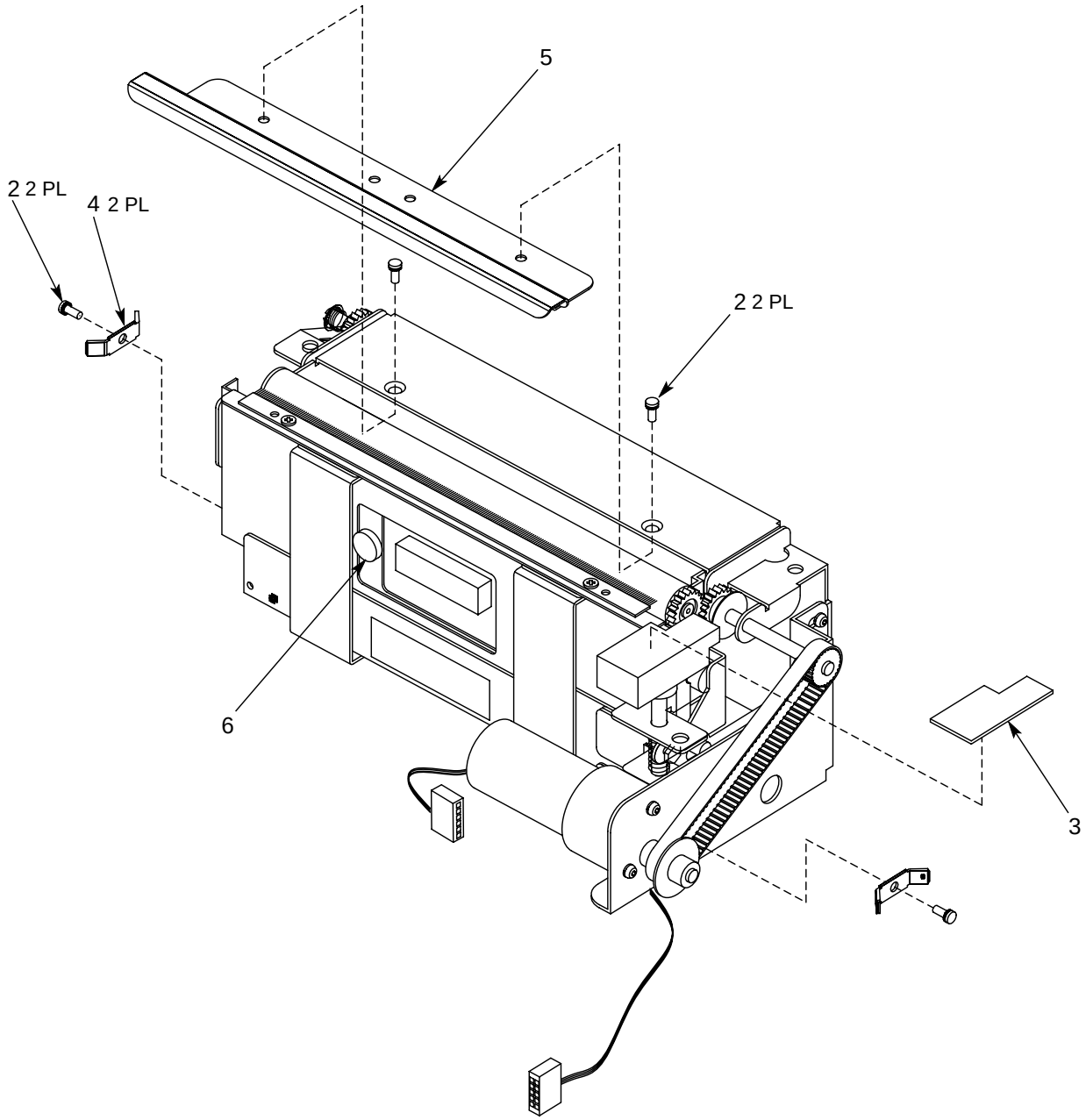

900723-XXX International Modems

Generic 220V

900723-008A Generic 220V 19.2K			
Item	**Description**	**Part Number**	**Qty**
1	MODEM MULTITECH 19.2K EXT 220V	407109-008	1
2	LABEL MUSE MODEM MULTITECH 19.	415266-001	1
3	CA IBM/AT DB9 F/DB25 M 6FT	700139-001	1

900723-308A Generic 220V 56K			
Item	**Description**	**Part Number**	**Qty**
1	MODEM MULTITECH 56K EXT 220V	407109-308	1
2	LABEL MUSE MODEM MULTITECH-56	415266-002	1
3	CA IBM/AT DB9 F/DB25 M 6FT	700139-001	1

900723-340A Euro/CE 220V 56K			
Item	**Description**	**Part Number**	**Qty**
1	MODEM 56K EUmEXT 220V	407109-340	1
2	LABEL MUSE MODEM MULTITECH-56	415266-002	1
3	CA IBM/AT DB9 F/DB25 M 6FT	700139-001	1

Germany

900723-002A Germany, 19.2K			
Item	**Description**	**Part Number**	**Qty**
1	MODEM MULTITECH 19.2K EXT GER	407109-005	1
2	LABEL MUSE MODEM MULTITECH 19.	415266-001	1
3	CA IBM/AT DB9 F/DB25 M 6FT	700139-001	1

France

900723-003A France 19.2K			
Item	**Description**	**Part Number**	**Qty**
1	MODEM MULTITECH 19.2K EXT FRE	407109-007	1
2	LABEL MUSE MODEM MULTITECH 19.	415266-001	1
3	CA IBM/AT DB9 F/DB25 M 6FT	700139-001	1

Sweden

900723-006A Sweden 19.2K			
Item	**Description**	**Part Number**	**Qty**
1	MODEM MULTITECH 19.2K EXT SWE	407109-009	1
2	LABEL MUSE MODEM MULTITECH 19.	415266-001	1
3	CA IBM/AT DB9 F/DB25 M 6FT	700139-001	1

United Kingdom

900723-007A United Kingdom 19.2K			
Item	**Description**	**Part Number**	**Qty**
1	MODEM MULTITECH 19.2K EXT UK	407109-006	1
2	LABEL MUSE MODEM MULTITECH 19.	415266-001	1
3	CA IBM/AT DB9 F/DB25 M 6FT	700139-001	1

Spain

900723-010A Spain 19.2K			
Item	**Description**	**Part Number**	**Qty**
1	MODEM MULTITECH 19.2K EXT SPA	407109-010	1
2	LABEL MUSE MODEM MULTITECH 19.	415266-001	1
3	CA IBM/AT DB9 F/DB25 M 6FT	700139-001	1

Italy

900723-011A Italy 19.2K			
Item	**Description**	**Part Number**	**Qty**
1	MODEM MULTITECH 19.2K EXT ITA	407109-011	1
2	LABEL MUSE MODEM MULTITECH 19.	415266-001	1
3	CA IBM/AT DB9 F/DB25 M 6FT	700139-001	1

Australia

900723-012A Australia 19.2K			
Item	**Description**	**Part Number**	**Qty**
1	MODEM MULTITECH 19.2K EXT ASTL	407109-012	1
2	LABEL MUSE MODEM MULTITECH 19.	415266-001	1
3	CA IBM/AT DB9 F/DB25 M 6FT	700139-001	1

Austria

900723-013A Austria 19.2K			
Item	**Description**	**Part Number**	**Qty**
1	MODEM MULTITECH 19.2K EXT AUST	407109-013	1
2	LABEL MUSE MODEM MULTITECH 19.	415266-001	1
3	CA IBM/AT DB9 F/DB25 M 6FT	700139-001	1

Bahrain

900723-014A Bahrain 19.2K			
Item	**Description**	**Part Number**	**Qty**
1	MODEM MULTITECH 19.2K EXT BAHR	407109-014	1
2	LABEL MUSE MODEM MULTITECH 19.	415266-001	1
3	CA IBM/AT DB9 F/DB25 M 6FT	700139-001	1

Belgium

900723-015A Belgium 19.2K			
Item	**Description**	**Part Number**	**Qty**
1	MODEM MULTITECH 19.2K EXT BEL	407109-015	1
2	LABEL MUSE MODEM MULTITECH 19.	415266-001	1
3	CA IBM/AT DB9 F/DB25 M 6FT	700139-001	1

900723-315A Belgium 56K			
Item	**Description**	**Part Number**	**Qty**
1	MODEM MULTITECH 56K EXT BEL	407109-315	1
2	LABEL MUSE MODEM MULTITECH-56	415266-002	1
3	CA IBM/AT DB9 F/DB25 M 6FT	700139-001	1

Czechoslovakia

900723-016A Czechoslovakia 19.2K			
Item	**Description**	**Part Number**	**Qty**
1	MODEM MULTITECH 19.2K EXT CZEC	407109-016	1
2	LABEL MUSE MODEM MULTITECH 19.	415266-001	1
3	CA IBM/AT DB9 F/DB25 M 6FT	700139-001	1

Denmark

900723-017A Denmark 19.2K			
Item	**Description**	**Part Number**	**Qty**
1	MODEM MULTITECH 19.2K EXT DEN	407109-017	1
2	LABEL MUSE MODEM MULTITECH 19.	415266-001	1
3	CA IBM/AT DB9 F/DB25 M 6FT	700139-001	1

Finland

900723-018A Finland 19.2K			
Item	**Description**	**Part Number**	**Qty**
1	MODEM MULTITECH 19.2K EXT FINL	407109-018	1
2	LABEL MUSE MODEM MULTITECH 19.	415266-001	1
3	CA IBM/AT DB9 F/DB25 M 6FT	700139-001	1

Hungary

900723-019A Hungary 19.2K			
Item	**Description**	**Part Number**	**Qty**
1	MODEM MULTITECH 19.2K EXT HUNG	407109-019	1
2	LABEL MUSE MODEM MULTITECH 19.	415266-001	1
3	CA IBM/AT DB9 F/DB25 M 6FT	700139-001	1

Iceland

900723-020A Iceland 19.2K			
Item	**Description**	**Part Number**	**Qty**
1	MODEM MULTITECH 19.2K EXT ICEL	407109-020	1
2	LABEL MUSE MODEM MULTITECH 19.	415266-001	1
3	CA IBM/AT DB9 F/DB25 M 6FT	700139-001	1

Ireland

900723-021A Ireland 19.2K			
Item	**Description**	**Part Number**	**Qty**
1	MODEM MULTITECH 19.2K EXT IRE	407109-021	1
2	LABEL MUSE MODEM MULTITECH 19.	415266-001	1
3	CA IBM/AT DB9 F/DB25 M 6FT	700139-001	1

Japan

900723-022A Japan 19.2K			
Item	**Description**	**Part Number**	**Qty**
1	MODEM MULTITECH 19.2K EXT JAP	407109-022	1
2	LABEL MUSE MODEM MULTITECH 19.	415266-001	1
3	CA IBM/AT DB9 F/DB25 M 6FT	700139-001	1

900723-322A Japan 56K			
Item	**Description**	**Part Number**	**Qty**
1	MODEM MULTITECH 56K EXT JAP	407109-322	1
2	LABEL MUSE MODEM MULTITECH-56	415266-002	1
3	CA IBM/AT DB9 F/DB25 M 6FT	700139-001	1

Russia

900723-023A Russia 19.2K			
Item	**Description**	**Part Number**	**Qty**
1	MODEM MULTITECH 19.2K EXT RUSS	407109-023	1
2	LABEL MUSE MODEM MULTITECH 19.	415266-001	1
3	CA IBM/AT DB9 F/DB25 M 6FT	700139-001	1

Malaysia

900723-024A Malaysia 19.2K			
Item	**Description**	**Part Number**	**Qty**
1	MODEM MULTITECH 19.2K EXT MALY	407109-024	1
2	LABEL MUSE MODEM MULTITECH 19.	415266-001	1
3	CA IBM/AT DB9 F/DB25 M 6FT	700139-001	1

Mexico

900723-025A Mexico 19.2K			
Item	**Description**	**Part Number**	**Qty**
1	MODEM MULTITECH 19.2K EXT MEX	407109-025	1
2	LABEL MUSE MODEM MULTITECH 19.	415266-001	1
3	CA IBM/AT DB9 F/DB25 M 6FT	700139-001	1

Netherlands

900723-026A Netherlands 19.2K			
Item	**Description**	**Part Number**	**Qty**
1	MODEM MULTITECH 19.2K EXT NETH	407109-026	1
2	LABEL MUSE MODEM MULTITECH 19.	415266-001	1
3	CA IBM/AT DB9 F/DB25 M 6FT	700139-001	1

900723-326A Netherlands 56			
Item	**Description**	**Part Number**	**Qty**
1	MODEM MULTITECH 56K EXT NETH	407109-326	1
2	LABEL MUSE MODEM MULTITECH 19.	415266-001	1
3	CA IBM/AT DB9 F/DB25 M 6FT	700139-001	1

New Zealand

900723-027A New Zealand 19.2K			
Item	**Description**	**Part Number**	**Qty**
1	MODEM MULTITECH 19.2K EXT NZEA	407109-027	1
2	LABEL MUSE MODEM MULTITECH 19.	415266-001	1
3	CA IBM/AT DB9 F/DB25 M 6FT	700139-001	1

900723-327A New Zealand 56K			
Item	**Description**	**Part Number**	**Qty**
1	MODEM 56K EXT NEW ZEAL	407109-327	1
2	LABEL MUSE MODEM MULTITECH-56	415266-002	1
3	CA IBM/AT DB9 F/DB25 M 6FT	700139-001	1

Norway

900723-028A Norway 19.2K			
Item	**Description**	**Part Number**	**Qty**
1	MODEM MULTITECH 19.2K EXT NOR	407109-028	1
2	LABEL MUSE MODEM MULTITECH 19.	415266-001	1
3	CA IBM/AT DB9 F/DB25 M 6FT	700139-001	1

Poland

900723-029A Poland 19.2K			
Item	**Description**	**Part Number**	**Qty**
1	MODEM MULTITECH 19.2K EXT POL	407109-029	1
2	LABEL MUSE MODEM MULTITECH 19.	415266-001	1
3	CA IBM/AT DB9 F/DB25 M 6FT	700139-001	1

900723-329A Poland 56K			
Item	**Description**	**Part Number**	**Qty**
1	MODEM MULTITECH 56K EXT POL	407109-329	1
2	LABEL MUSE MODEM MULTITECH-56	415266-002	1
3	CA IBM/AT DB9 F/DB25 M 6FT	700139-001	1

Portugal

900723-030A Portugal 19.2K			
Item	**Description**	**Part Number**	**Qty**
1	MODEM MULTITECH 19.2K EXT PORT	407109-030	1
2	LABEL MUSE MODEM MULTITECH 19.	415266-001	1
3	CA IBM/AT DB9 F/DB25 M 6FT	700139-001	1

Singapore

900723-031A Singapore 19.2K			
Item	**Description**	**Part Number**	**Qty**
1	MODEM MULTITECH 19.2K EXT SING	407109-031	1
2	LABEL MUSE MODEM MULTITECH 19.	415266-001	1
3	CA IBM/AT DB9 F/DB25 M 6FT	700139-001	1

South Africa

900723-032A South Africa 19.2K			
Item	**Description**	**Part Number**	**Qty**
1	MODEM MULTITECH 19.2K EXT SAFR	407109-032	1
2	LABEL MUSE MODEM MULTITECH 19.	415266-001	1
3	CA IBM/AT DB9 F/DB25 M 6FT	700139-001	1

Switzerland

900723-033A Switzerland 19.2K			
Item	**Description**	**Part Number**	**Qty**
1	MODEM MULTITECH 19.2K EXT SWIT	407109-033	1
2	LABEL MUSE MODEM MULTITECH 19.	415266-001	1
3	CA IBM/AT DB9 F/DB25 M 6FT	700139-001	1

Turkey

900723-034A Turkey			
Item	**Description**	**Part Number**	**Qty**
1	MODEM MULTITECH 19.2K EXT TURK	407109-034	1
2	LABEL MUSE MODEM MULTITECH 19.	415266-001	1
3	CA IBM/AT DB9 F/DB25 M 6FT	700139-001	1

Ukraine

900723-035A Ukraine 19.2K			
Item	**Description**	**Part Number**	**Qty**
1	MODEM MULTITECH 19.2K EXT UKR	407109-035	1
2	LABEL MUSE MODEM MULTITECH 19.	415266-001	1
3	CA IBM/AT DB9 F/DB25 M 6FT	700139-001	1

Hong Kong

900723-337A Hong Kong 56K			
Item	**Description**	**Part Number**	**Qty**
1	MODEM MULTITECH 56K EXT HKNG	407109-337	1
2	LABEL MUSE MODEM MULTITECH-56	415266-002	1
3	CA IBM/AT DB9 F/DB25 M 6FT	700139-001	1

Slovak Republic

900723-339A Slovak Republic 56K			
Item	**Description**	**Part Number**	**Qty**
1	MODEM MULTITECH 56K EXT SLVK	407109-339	1
2	LABEL MUSE MODEM MULTITECH-56	415266-002	1
3	CA IBM/AT DB9 F/DB25 M 6FT	700139-001	1

Kits

900811-001 (Rev C) – KIT MUSE DICTATION			
Item	**Part Number**	**Item Description**	**Qty**
1	417702-002	DISK SOUND BLASTER 4171	1
2	406044-004	PCB SOUNDBLASTER SB 4171	1
3	407268-002	HEADSET STEREOPHONE/MICRO KOSS	1
4	407268-003	HEADSET VOLUME CONTROL KOSS	1

900684-003 (Rev C) – KIT MUSE DIGIBOARD			
Item	**Part Number**	**Item Description**	**Qty**
2	412946-002	BOARD SERIAL PORT MULTIPLEXER	1
3	414945-002	DISK DIGIWARE 1.4.4	1
4	414961-001	CABLE DIGIBOARD 4 PORT	1

900684-004 (Rev B) – KIT MUSE DIGIBOARD			
Item	**Part Number**	**Item Description**	**Qty**
1	412946-004	SERIAL PORT MULTIPLXR 920 PCI	1
2	414961-001	CABLE DIGIBOARD 4 PORT	1
3	407122-013	LABEL MUSE NETWORK	1

900471-201 (Rev C) – KIT NTWK MUSE THIN ETHERNET			
Item	**Part Number**	**Item Description**	**Qty**
1	418295-001	ETHER EZ COMBO NETWORK ADAPTER	1
2	407122-004	LABEL MUSE NETWORK ETHER PORT	1
3	406405-001	ADAPTER BNC TEE F-M-F	1
4	700109-015	CBL PVC THIN-NET COAX 15FT	1
4	414733-001	DISK SMC ETHERNET	1

901215-001 (Rev A) – KIT MUSE WRITER BRD/CBL NON-CE			
Item	**Part Number**	**Item Description**	**Qty**
1	800080-005	PCB 34010 WRITER	
2	700461-002	HARN MAC 8/MUSE WRITER SERIAL	

901206-001 (Rev A1) – KIT MUSE ACC REGISTRY DRV/SW			
Item	**Part Number**	**Item Description**	**Qty**
1	422185-001	ZIP DRIVE EXT PARALLEL PORT	1
2	422186-001	DISK 100MB ZIP 10 PACK	.3
3	417516-022	ACC REGISTRY MODULE MUSE	1
4	419719-001	DISK MUSE OPTIONS DISK	1

901124-001 (Rev A) – KIT MUSE DAT TAPES/LBLS/CLNG			
Item	**Part Number**	**Item Description**	**Qty**
1	413628-201	DAT CARTRIDGE 125 METER DDS-3	11
2	409669-001	DAT TAPE HEAD CLEANING KIT	1
3	420920-001	LABEL SET MUSE DAT TAPES	1

2000390-001 (Rev A) – KIT MUSE FS UPGR 200MHZ 5A ENG			
Item	**Part Number**	**Item Description**	**Qty**
1	6121-928	DRIVE HRD 9.1GB LP ULT	1
2	45000-603	SCREW SEMS PH 6-32 X 3/16 PHIL	1
3	420859-001	CODE REQ MUSE VENDOR SFTWR	1
4	407109-301	MODEM MULTITECH 56K EXT 120V	1
5	415266-002	LABEL MUSE MODEM MULTITECH-56K	1
6	420858-001	CD-R MUSE VENDOR SOFTWARE PKG	1
7	419931-019	MUSE FIELD UPGRADE INSTR 005A	1
8	413628-001	DAT CARTRIDGE 120 METER DDS-2	11
9	420920-001	LABEL SET MUSE DAT TAPES	1
10	421341-001	CABLE SERIAL 9 PIN UPS	1
11	421075-001	DISK MUSE RESIDUAL TRANSFER	1
12	421424-001	CARTON DISK DRIVE W/FOAM	1
13	700139-001	CA IBM/AT DB9 F/DB25 M 6FT	1
14	409669-001	DAT TAPE HEAD CLEANING KIT	1
22	419931-012	MUSE FIELD SERVICE MANUAL 5A	1
23	901063-021	KIT MUSE FILE SRV VENDR SW INT	1

901072-001 (Rev B) – Kit MUSE DAT Drive 12GB			
Find Num	**Item Number**	**Item Description**	**Qty**
1	413627-004	DRIVE DAT DDS-3 12GB	1
2	413628-201	DAT CARTRIDGE 125 METER DDS-3	11
3	409669-001	DAT TAPE HEAD CLEANING KIT	1
4	413629-001	MOUNTING KIT DDS-2 DAT	1
5	418212-001	ADAPTER 68 TO 50 PIN	1
6	411059-001	SCREW SEMS PH M3- .5X8	4
7	420920-001	LABEL SET MUSE DAT TAPES	1

Sub-Assemblies

NOTE

Sub-assemblies in this section are in numerical order by Part Number.

Wire 16 GA Brown 2.5L (PN 80307-041B)

Item	Description	Part Number	Qty
3	RCPT FASTON .032 X .250 16-14	405582-007	2
15	WIRE 16 STRD BROWN	4889-007	0.21

Wire 16 GA Grn/Yel 4L (PN 80307-053A)

Item	Description	Part Number	Qty
1	TERMINAL .250X.032 FIQC 16-14	410039-001	1
2	TERMINAL 6 RING 16-14	4531-106	1
3	WIRE 16 STRD GN/Y	4889-036	0.33

Cable 10 Conductor Ribbon 11 Inch (PN 80616-001H)

Item	Description	Part Number	Qty
1	CONN POL 10P F RBN	1803-110	2
2	CABLE 10 COND 28 AWG	4901-110	1.02

Cable Power Dist MUSE Network Writer (PN 80862-002A)

Item	Description	Part Number	Qty
1	CONN POL 50P F RBN	1803-150	1
2	CONN POL 26P F RBN	1803-126	1
3	CONN,PLUG WO/MTG EARS M RBN	1813-110	1
4	CONN POL 14P F RBN	1803-114	1
5	CABLE 28AWG FL 50 COND	4901-050	0.71

Cable Door Opt Sensor MUSE Writer (PN 88114-006)

Item	Description	Part Number	Qty
1	CONT STD .025F 26-22	1779-003	4
2	CONN HSG PLZS .1 10P 2X5	1783-110	1
3	SENSOR	2797-125	1
4	TUBING FIT-221 1/8 BLK	4882-104	0.50

MAC6/8 Acquisition Deskside Assy – (PN 405835-009D)

MAC 6/8 Acquisition Deskside Assy – 405835-009D			
Item	**Part Number**	**Description**	**Qty**
1	405789-004	PLATE FRONT I/O MAC 8/MUSE	1
2	411045-002	BRKT MTG I/O PNL MUSE	1
3	411660-002	LABEL MAC 8/MUSE AM PORT	1
5	45074-412	SCREW BDGH 4-40X3/8,	7
6	4644-710	NUT HEX KEPS 10-32	2
7	700081-001	CBL INTERNAL MUSE NTWK I/O	1
8	800080-005	PCB 34010 WRITER	1
9	800106-004	PCB MUSE I/O NETWORK CE	1
10	5516-011	CABLE STRAIGHT 6FT NON-KEYED	1
11	4520-004	WASHER FLAT SS #4,	3
12	700461-002	HARN MAC 8/MUSE WRITER SERIAL	1
13	700060-004	CABLE MAC 8/MUSE CSI INTFC 6FT	1
16	700491-002	CABLE D9 M/D9 F MAC 8/MUSE	1

Kit Metal MUSE Network Writer (PN 420287-001B)

Item	Description	Part Number	Qty
1	DOOR ACCESS WRITER MUSE	405655-004	1
2	CHASSIS MUSE NTWK WRTR	420285-001	1
3	COVER MUSE NTWK WRTR	420286-001	1

Cable Internal MUSE Network I/O (PN 700081-001B)

Item	Description	Part Number	Qty
1	CONN POL 10P F RBN	1803-110	2
2	CABLE 10 COND 28 AWG	4901-110	1.75

Cable INT Power Writer (PN 700083-001C)

Item	Description	Part Number	Qty
2	CONTACT MR F 26-18AWG	1787-001	8
3	CONN RCPT MR AMP 9F	1786-509	1
4	TERMINAL 6 RING 22-16	4531-006	8
5	WIRE 18 STRD BLK	4888-002	5.50
6	WIRE 18 STRD RED	4888-003	5.50
7	WIRE 22 STRD WHT/BLK	4899-011	1.83
8	WIRE 18 STRD WH/RD	4888-012	1.83

Cable PVC Thin-net Coax 15Ft (PN 700109-015B)

Item	Description	Part Number	Qty
1	CONN BNC CRIMP FOR PVC MALE	406407-002	2
2	CBL PVC THIN-NET COAX CRIMP	406537-001	15

Cable Pwr/Pwr Supply MUSE Writer (PN 700111-001D)

Item	Description	Part Number	Qty
1	TERMINAL 6 RING 22-16	4531-006	4
2	TUBING FIT-221 1/4 BLK	4882-106	0.37
3	CORD POWER 16-3 SJT	5510-004	1.83
4	RCPT FASTON .032 X .250 16-14	405582-007	2

Cable Writer Intcon (PN 700145-001A)

Item	Description	Part Number	Qty
1	SHELL D CONN 37PIN EMI 3M	1739-537	2
2	CONN D TYPE RBN M 37PIN 3M	1747-737	2
3	STRAIN RELIEF 37PIN D CONN 3M	1747-992	2
4	CABLE RND RBN W/SHLD 37 COND	4901-337	6

Harness MAC 8/MUSE Writer Serial (PN 700461-002C)

Item	Description	Part Number	Qty
1	CABLE 28 AWG FLAT 26 COND	4901-026	1.09
2	CONN POL 26P F RBN	1803-126	1
3	CONN RCPT 25F RBN CA	1746-225	1
4	SOCKET JACKSCREW D CONN LONG	1747-996	2
5	BRACKET IBM G370	406978-005	1
6	CONN RCPT D 9F RBN CA	1746-209	1
7	CABLE 10 COND 28 AWG	4901-110	2
8	CONN POL 10P F RBN	1803-110	1

Cable D9 M/D9 F MAC 8/ MUSE (PN 700491-002E)

Item	Description	Part Number	Qty
1	CONN COV 9PIN D	1739-102	2
3	CONN RCPT D 9F	1746-109	1
4	CONN PLUG D 9M	1747-109	1
5	CONN JACK SCREW-D (PKG OF 2)	1747-999	2
6	CONTACT M 20G 24-20	1800-201	9
7	CONTACT F 20G 24-20	1800-301	9
8	TIE WRAP 4.00LG X .125W	4535-001	2
9	CABLE 3 COND 3/22	4901-003	1.50

Kit Modem (PN 900192-001C)

Item	Description	Part Number	Qty
1	PCB MUSE NETWORK MODEM	800116-001	1
2	CBL TEL 4 COND MOD PLUG 14FT	80159-014	2
3	LABEL FCC MODEM MUSE	407160-002	1
4	LABEL MUSE NETWORK MODEM	407122-001	1

PS/2 Barcode Wand with Edit Label (PN 900266-103E)

Item	Description	Part Number	Qty
1	BARCODE READER KEYWAND	413999-001	1
2	EDIT LABEL	414226-002	1

Twisted Pair PCI (PN 900471-402D)

Item	Description	Part Number	Qty
1	ETHERLINK 3/16 BIT COMBO	414582-001	1
2	LABEL MUSE NETWORK ETHER PORT	407122-004	1
3	CBL 10BASE-T STP 15FT	408997-001	1
4	DISK 3COM ELINK III 4.1	414811-001	1

Kit Keyboard – English (PN 900508-001D)

Item	Description	Part Number	Qty
1	KEYBOARD PS/2 CONN INTEL ENG	408237-101	1
2	LABEL MUSE KEYBOARD	413738-001	1

Kit Laser Printer PS2 – 100-120V (PN 900623-001D)

Item	Description	Part Number	Qty
1	LASER PRINTER, 4000N, 100-120V	413678-201	1
2	CABLE PARALLEL PRNTR 8-12 FT	6119-101	1
4	PAPER 20LB BOND WHITE 8 1/2x11	9242-101	1
5	PAPER CS BOND 8-5 X 11 5PKS/CS	9402-053	0.20
6	LABEL LASERGRAPH PRINTER	420522-001	1
7	LABEL MUSE NETWORK LASER PRTR	407122-012	1

Kit Laser Printer PS2 – 220-240V (PN 900623-002E)

Item	Description	Part Number	Qty
1	LASER PRINTER, 4000N 220-240V	413678-202	1
2	CABLE PARA PRNT W/FERR 8-12FT	6119-103	1
4	PAPER 20LB BOND WHITE 8 1/2x11	9242-101	1
5	PAPER CS BOND 8-5 X 11 5PKS/CS	9402-053	0.20
6	LABEL LASERGRAPH HELLIGE VRSN	420522-002	1
7	LABEL MUSE NETWORK LASER PRTR	407122-012	1

Kit Multitech Modem – 120V (PN 900723-001A)

Item	Description	Part Number	Qty
1	MODEM MULTITECH 19.2K EXTERNAL	407109-004	1
2	LABEL MUSE MODEM MULTITECH 19.	415266-001	1
3	CA IBM/AT DB9 F/DB25 M 6FT	700139-001	1

Kit PCI Video Board (PN 900881-004C)

Item	Description	Part Number	Qty
1	BOARD VIDEO HI-RES VX+	415997-005	1
2	DISK ATI GRAPHICS XPRESS 2.22	418585-001	1

Kit MUSE CD-ROM/Disk (PN 900881-011B)

Item	Description	Part Number	Qty
1	CD-ROM DRIVE SONY 24X IDE	410784-102	1
2	DSK MUSE CD VENDOR SONY DRIVER	418250-001	1

NOTE

Do NOTconnect office connect switch to another switched port. The port to which the switch is connected must be able to handle multiple MAC layer addresses.

Appendix A: Abbreviations

Standard Abbreviations **3**

Standard Abbreviations

A

A	ampere
A-ang	antianginal
A-arh	antiarrhythmic
A-coa	anticoagulants
A-hyp	antihypertensive
A1 - A4	auxiliary leadwires
AAMI	American Association of Medical Instrumentation
ABP	ambulatory blood pressure
ac, AC	alternating current
ACLS	Advanced Cardiac Life Support
A/D	analog-to-digital
Adj	adjustable
AG	automotive glass
Ah	ampere hours
AHA	American Heart Association
Al	aluminum
AllRam	all RAM
AllSec	all sector
AllTrk	all track
ALT	alternate
Alt-Off	alternate offset
am, AM	acquisition module, ante meridiem
AM-1	acquisition module-1
AM-1M	acquisition module-1 modified
AM-2	acquisition module-2
AM-3	acquisition module-3
AM-4	acquisition module-4
amp	ampere
Ampl	amplifier
AMU	ambulatory monitoring unit
ANA	analog
ANLG	analog
AnsrTone	answer tone
A/O	Analog Output
ASCII	American Standard Code for Information Interchange
ASSY	assembly
Attn	attention
AUG	August
AUST	Australian
AUSTRALN	Australian
Auto	automatic
AutoRhym	automatic rhythm
AUX	auxiliary
aVF	augmented left leg lead
avg	average
aVL	augmented left arm lead
aVR	augmented right arm lead
AWG	American Wire Gage

B

Bd	board, baud
BDGH	binding head
BetaB	beta blockers
BKSP	backspace
BLK	black
BLU	blue
Blvd	boulevard
BP	blood pressure
BPM	beats per minute
BRIT	Britain
BRN	brown
BSI	British Standards Institute
Btu	British thermal unit

C

CalcBlk	calcium blockers
CAPOC	Computer Assisted Practice of Cardiology
CASE	Computer Aided System for Exercise
Catoprl	Catopril
Cauc	Caucasian
Cer	ceramic
CFM	cubic feet/minute
CGR	computer graphic record
Ch, CH	channel
C/L	center line
CLK	clock signal
Clonid	Clonidine
cm	centimeter
cm2	square centimeters
Cmd	command number
CMMR	common mode rejection ratio
CMOS	complementary metal-oxide semiconductor
c/o	in care of
COM1	communications port 1
COM2	communications port 2
ComLink	communications link
Comp	composition
Confrmd	confirmed
Cont, CONT	Continental, continued
Coumadn	Coumadin
CPR	cardiopulmonary resuscitation
CPU	central processing unit
CR	diode

CRC	cyclic redundancy check
CRD	cord
crt, CRT	cathode ray tube
CSA	Canadian Standards Association
CTRL	control

D

D/A	digital to analog
DA	damping relay
dac, DAC	digital-to-analog converter
DAN	Danish
Dat/Tim	date/time
dBm	decibel (referenced to 1 milliwatt into 600 ohms)
dc, DC	direct current
DD	double density, day
DDD	Digital Diagnostic Diskette
DEC	Digital Equipment Corporation, December
Del	delete
DEMO	demonstration
DES	designation
DevId	device identification
Diag	diagnostic
Digital	Digitalis
Digitox	Digitoxin
Digox	digoxin
Digoxin	Digoxin-Lanoxin
DIP	dual in-line package
Dirctry	directory
Diurt	diuretics
DOB	date of birth
DOS	disk operating system
DP	diametral pitch
DPST	double-pole, single-throw
DRAM	dynamic RAM
DR/DT	digital recording/digital transmission
DSKTP	desktop
Dysopyr	Dysopyramide

E

E	enable, vector electrode site, vector lead
ecg, Ecg, ECG	electrocardiogram
ECO	Engineering Change Order
EDIC	Electrocardiograph Digital Information Center
EEPROM	electrically erasable programmable ROM
e.g.	for example
EGA	enhanced graphics adapter
EMF	electromotive force
EMI	electromagnetic interference
ENG	English
EOF	end of file
EPIC	Electronic Patient Information Chart
EPLD	electrically programmable logic device
EPROM	eraseable, programmable, read-only memory
ESD	electrostatic discharge
etc, etc.	et cetera
EURO	Europe, European
EXP	Expanded

F

F	fuse, Farad, female
F1-F5	function keys 1 through 5
Fax	facsimile
FCC	Federal Communications Commission
FE	front end
FILH	fillister head
FLH	flat head
FLRAM	flash RAM
FR	French
FrntEnd	front end
FSK	frequency shift keying
ft	foot, feet
Furosem	Furosemide

G

g	gram, acceleration due to gravity
GB	Great Britain
GERM	German, Germany
GND	ground, digital ground (dc common)
GRN	green
GRY	gray

H

H	high, vector electrode site, vector lead
HDLC	high-level data link control
Hex, HEX	hexagon, hexadecimal
HH	hour
HiRes	high-resolution
Hr	hour
Hydral	Hydralazine
Hz	Hertz (cycles per second)

I

I	on, input, vector electrode site
I, II, III	limb leads
II	vector lead
IC	integrated circuit
ID	identification
i.e.	that is
IEC	International Electrotechnical Commission
in	inch
IN	input
inc, inc., INC	incorporated
Info	information

Ins	insert
I/O	input/output
I/P	input
ISA	industry standard architecture
Isosorb	Isosorbide
IT	Italian, Italy

J

JAN	January
JIS	Japan Industrial Standards

K

k, K	kilo, 1000, 1024
Kb, KB	kilobyte
kg, Kg	kilogram
kHz, KHz	kilohertz
kV, KV	kilovolt
Kyb	keyboard

L

L	line
L1	level one
L2	level two
LA	left arm
lb	pound
LCD	liquid crystal display
Lcl Line	local line
Ld Grps	lead groups
LED	light-emitting diode
LH	left hand
Lidoca	Lidocaine
LL	left leg
Loc	location
LocPc	Local MAC PC
LogRetry	log retry
Ltd	limited

M

m	meter
M	megabyte, metric, vector electrode site, vector lead, male
mA	milliamperes
MAC	Microcomputer Augmented Cardiograph
mains voltage	voltage of a supply mains between 2 line conductors of a polyphase system or voltage between the line conductor and the neutral of a single-phase system
max	maximum
Measure	measurements
Med	medications
MEM	memory
MF	metal film
MHz	megahertz
min	minutes, minimum
Misc	miscellaneous
mm	millimeter
MM	minute
MMM	month
mm/mV	millimeter per millivolt
mm/s	millimeter per second
MMS	Marquette Medical Systems
Modem	modulator/demodulator
MOS	metal oxide semiconductor
MPE	metallized polycarbonate expitaxial
ms	milliseconds
MS-DOS	Microsoft Disk Operating System
MTBF	mean time between failures
mtg	mounting
MTR	MOTOR
MUSE	Marquette Universal System for Electrocardiography
mux	multiplexer
mV	millivolt
mVR	minus (inverted) aVR

N

N	neutral
n/a	not available
NA	not applicable
NC	no connection
Nitrate	nitrates
NLQ	near letter quality
NMI	non-maskable interrupt
NMOS	N-channel metal-oxide semiconductor
No	number
NO	normally open
norm	normal
nS	nanoseconds
NSR	Normal Sinus Rhythm

O

O	off, original
OE	other errors
OEM	original equipment manufacturer
OH	off-hook relay
OneSec	one sector
ORG	orange
Orig	original
OUT	output
oz	ounce

P

P	P wave (section of the ECG waveform)
p-p	peak-to-peak
PA	P wave amplitude
Params	parameters

Passwds	passwords
PatData	patient data
PatInfo	patient information
PATN	patient
PC	printed circuit, personal computer
PCB	printed circuit board
pF	picofarad
Pgm	program
PgmId	program identification
Phenoth	Phenothiazide
Phenytn	Phenytoin
PID	patient identification digit
PLCC	plastic leadless chip carrier
PM	power module
pm, PM	post meridiem, preventive maintenance
PM-2	Power Module-2
PM-3	Power Module-3
pn, PN	part number
PNH	pan head
PPA	P wave amplitude
PR	ECG signal interval
Pro-Off	progressive offset
Procain	Procainamide
PROM	programmable read-only memory
Propran	Propranolol
PSK	phase shift keying
PSU	power supply unit
Psych	psychotropic
PUP	pull-up signal
PVC	polyvinyl chloride
PWM	pulse-width modulation
PWR	power
PWR CRD	power cord

Q

Q	transistor
QA	quality assurance, Q wave amplitude
QAD	Quality Assurance Deviation
QAM	quadrature amplitude modulation (phase and amplitude modulation)
QC	quality control
QD	Q wave duration
QRS	QRS complex (portion of ECG waveform), interval of ventricular depolarization
QT	QRS interval
QTC	QRS interval
QTY	quantity
Quinid	Quinidine

R

R	resistor, red, reset
RA	right angle, right arm or R wave amplitude
RAM	random access memory
RC	resistor capacitor
RD	R wave duration
Ref	reference, refresh
REN	Ringer Equivalence Number
Reserp	Reserpine
REV	revision
RevdBy	reviewed by
RevXmit	reverse transmission
rf	radio frequency
RFI	radio frequency interference
RGB	red, green, blue
RI	ring indicate
RL	right leg
RMR	Rhythm and Morphology Report
ROM	read only memory
RPA	R wave amplitude
RPD	R wave duration
rpt, Rpt	report
RTC	real time clock
RTN	return
RVS	reverse
R/W	read/write

S

12SL	12 simultaneous leads
s, S	second, select, switch
SA	s wave amplitude
SB	slow-blow
SCL	safe current limits
SD	schematic diagram, S wave duration
SE	serial input/output errors
sec	second
sec.s	seconds
SEER	Solid-state Electronic ECG Recorder
SING	Singapore
SP	Spanish
SPA	S wave amplitude
SPDT	single-pole, double-throw
SRAM	static RAM
ST-T	ST-T wave (section of the ECG waveform)
standrd, Standrd	standard
STD	standard
STE	ST segment displacement at the end
STJ	ST segment displacement at the J point
STM	ST segment displacement at the mid-point between STJ and STE
stmts, Stmts	statements
SumRam	some RAM
supply mains	permanently installed power source
SVT	power cord type; 300 V
sw, SW	switch, software
SW	Swedish, Sweden

T

T Tone	touch tone
TA	T wave amplitude
Tant	tantalum
TDML	treadmill
TE	timeout errors
Tech	technical
Thiazid	Thiazide
TM	trademark
Tot	total number or errors
TP	test point
TPA	T' wave amplitude
TRAM	Transport Remote Acquisition Monitor
Tricyli	Tricylic antidepressant
TTL	transistor-transistor logic, TTL levels
TVS	transient voltage suppressor

U

UE	undefined errors
uF	microfarad
UL	Underwriters' Laboratory, Inc
Unconf	unconfirmed
UUT	unit-under-test

V

v, V	volt, volts
V1-V6	precordial leads
V123	V1, V2, V3
V3R	precordial lead
V456	V4, V5, V6
V4R	precordial lead
V ac	volts, alternating current
V dc	voltage, direct current
VA	volt-amperes
Var	variable
VDE	Verband Deutscher Elektrotechniker (German regulatory agency)
Vent.	ventricular
VF	ventricular fibrillation
VGA	video graphics array
VIA	versatile interface adapter
VIO	violet
Volt	voltage
VRAM	video RAM
vs	versus

W

w/	with
W	watt
Warfar	Warfarin
WHT	white
WI	Wisconsin

X

x	by (as in "8-1/2 x 11")
XCV	transceiver
XYZ	orthogonal leads

Y

Y	year, yellow
yr	year
yrs	years
YY	year

Symbols

↑	SHIFTed or alternate function
µ	micro
µF	microfarad
µs, µsec	microsecond
68K	68000
&	and
#	number
°C	degrees Celsius
°F	degrees Fahrenheit
Ω	Ohm, ohm
%	percent
®	registered
>	greater than
<	less than
*	An asterisk after a signal name indicates the signal is active at its relatively lower potential, or "active-low." Signals without the asterisk suffix are active at their relatively higher potential, or "active-high."
12SL	12 simultaneous leads

Appendix B: Technical Description

Intel File Server **B-3**
System Unit B-3
Columbus II Chassis B-3
Electrical Power Supply B-3
Environment B-4
Safety Regulations B-4
Electromagnetic Compatibility B-4
Hard Disk Drive B-5
CD-ROM Drive B-5
Ribbon Cable B-5

Compaq Server – ProLiant 3000R **B-6**
System Unit B-6
Power Supply B-6
SDRAM Dual Inline Memory Modules B-7
1.44-MB Diskette Drive B-7
IDE CD-ROM Drive B-8
Integrated Dual-Channel Wide-Ultra SCSI Controller B-9
9.1GB Hot-Plug Hard Drive B-9
Rack-Mounted UPS B-10

21-inch Color Monitor **B-12**

17-inch Color Monitor **B-13**

15-inch Color Monitor **B-14**

Client **B-15**

Client Hard Drive **B-16**
Specifications B-16
Disk Drive Configuration B-16
Performance Specifications B-16
Reliability Specifications B-16
Physical Specifications B-17
Environmental Limits B-17
Power Specifications B-17

Client CD-ROM Drive **B-18**

General B-18
Performance B-18
Reliability B-18
Audio B-18
Environmental B-18
Power B-19
Physical B-19
Connectors B-19
Regulatory B-19

HP Laser Printer B-20
Physical Specifications B-21
Electrical specifications B-21
Minimum recommended circuit capacity B-21
Environmental specifications B-21
Acoustic emissions (per ISO 9296) B-21
Safety certifications B-21

Zip Drive Parallel Port B-23
Performance B-23
Reliability and Service B-23
General B-23
Operating Conditions B-23

MUSE Network Writer B-25

Safety B-26

Table B-1. Intel File Server – Intel N440BX	
System Unit	
GE Marquette PN:	2001640-002
Intel PN:	S0NSCL0X0KSD
Features:	N440BX (Nightshade) computer with NC440LX Motherboard, Columbus II Chassis, floppy, No CPU, No CDROM.
Processor	500-MHz Pentium® III processor with 100-MHz system bus; 512 KB integrated L2 cache.
Columbus II Chassis	
Product regulations label (attached to chassis) including the following markings: UL and cUL Listing Marks	CE Mark NEMKO Mark FCC, Class B Markings (Declaration of Conformity) ICES-003 (Canada Compliance Marking)
Dimensions Height Width Depth	 19.3" (49.02 cm) 8.3" (21.08 cm) 17.7" (44.96 cm)
Weight	41 lbs (19 kg), shipping weight
Color	Beige (Intel Color Standard 513505)
Drive Bays – Internal	Six @ 3.5"; height 1.0" or three @ 3.5"; height 1.6"
Peripheral Bays – External (not certified for hard drive use)	Three @ 5.25"; 1/2 height (1.6") One @ 3.5"; 1/3 height (1.0")
Security	Chassis-intrusion switch for alert over network (enabled by server management software which ships with Intel's server boards) Lockable side cover and hot-swap drive bay
Electrical Power Supply	
AC Voltage and Frequency	115v/60 Hz; 230v/50 Hz
DC Power Supply	300W PFC
+5V	26A maximum continuous
+5V standby	.8A maximum continuous
+12V	10A maximum continuous
+3.3V	16A maximum continuous
-5V	.25A maximum continuous
-12V	0.5A maximum continuous
Remote Voltage Sense	Senses voltage levels on server board for more precise power supply voltage regulation, leading to more efficient use of power

Table B-1. Intel File Server – Intel N440BX (Continued)	
System Cooling Three fans total	Three 120mm fans. One 80mm fan (in power supply) All fans provide RPM data to server board for fan failure prediction and detection
Front Panel	Power/Reset Power button (momentary), system reset button LEDs Power, hard drive activity
Serviceability The following are the suggested times needed for a trained field service technician to perform maintenance procedures, after diagnosis of the system condition:	Remove cover 1 min. Remove and replace disk drive 5 min. Remove and replace power supply 5 min. Remove and replace fan 5 min. Remove and replace expansion board 5 min. Remove and replace front panel board 5 min. Remove and replace baseboard (with no expansion boards) 10 min.
Environment	
Ambient Temperature Operating Temp. Nonoperating/storage Temp.	 +10° C to +35° C -40° C to +70° C ambient
Relative Humidity Non-operating	 95% @ 30° C noncondensing
Acoustics	less than 45 dB at typical office temperature (65-70° F)
Electrostatic discharge	20KV per Intel Environmental test specification
Safety Regulations	
The chassis when integrated with an Intel N440BX server board and configured as outlined in the Columbus II Chassis Subassembly Installation Guide, complies with the following Safety and EMC Regulations:	
U.S. & Canada	UL 1950 - CSA 950-95, 3rd Edition (UL and cUL)
EN60 950 2nd Edition (with Amendments 1 to 3) (CE Mark Complies with EC Directive 73/23/EEC)	EN60 950 2nd Edition (with Amendments 1 to 3) (CE Mark Complies with EC Directive 73/23/EEC)
International	International IEC 950 2nd Edition (with Amendments 1to 4): CB Certificate and Report
Norway, Sweden, Denmark, Finland	EMKO-TSE (74-SEC) 207/94; NEMKO Licensed
Australia, New Zealand	AS/NZS 3260 (based on IEC 950 CB Certificate and Report)
Electromagnetic Compatibility	
US	FCC CFR 47 Part 15, Class B
Canada	ICES-003, Class B
Europe, CE Mark	EN55022, Class B & EN50082-1 (CE Mark-Complies with EC Directive 89/336/EEC) \ International CISPR 22, Class B 2nd Edition
International	CISPR 22, Class B 2nd Edition
Japan	VCCI, Class B (ITE) (based on CISPR 22 Requirements)

Table B-1. Intel File Server – Intel N440BX (Continued)	
Australia, New Zealand	AS/NZS 3548 (based on CISPR 22)
Hard Disk Drive	
GEMMS PN	2001640-005
Manufacturer	Seagate
Mfg Part Model/Number	Barracuda 18LP Family /ST318275LW
Description	18.21GB LVD [1] 1-inch
Speed	7200 rpm
Seek time	6.9 ms avg
CD-ROM Drive	
GEMMS PN	2001640-006
Manufacturer	Sony
Mfg Part Number	CDU701-F2
Description	40X IDE
Ribbon Cable	
GEMMS PN	2001640-007
Manufacturer	Adaptec
Mfg Part Number	ACK-W2W-5IT
Description	Cable Ribbon, SCSI, 68-pin w/termination, 5CONN, 3ft

1. LVD (Low Voltage Differential) devices are defined under the Ultra2 subset of the SCSI-3 standard. Industry wide, the terms Low Voltage Differential (LVD) and Ultra2 SCSI are used interchangeably.

Table B-2. Compaq Server – ProLiant 3000R		
System Unit		
GE Marquette Part Number:	422402-001	
Description:	COMPAQ PROLIANT 3000R, 450MHZ PII, 512K, 128MB RAM, RACK MOUNTABLE	
Dimensions (H x W x D)	20.5 x 12.7 x 24.5 in / 52.1 x 32.3 x 62.2 cm	
Weight (Model 1, U.S.)	75 lbs / 34 kg	
Input Requirements	**Low range**	**High range**
Rated Input Voltage	100 to 120 V	200 to 240 V
Rated Input Frequency	50 to 60 Hz	50 to 60 Hz
Rated Input Current	8 A	6 A
Power Supply Output Power	Low range	High range
Rated Steady-State Power	500 W	750 W
Maximum Peak Power	540 W	780 W
Temperature Range		
Operating	50° to 95°F	10° to 35°C
Non-operating	-20° to 140°F	-30° to 60°C
Relative Humidity (noncondensing)		
Operating 20% to 80% 20% to 80%	20% to 80%	20% to 80%
Nonoperating	5% to 90%	5% to 90%
Maximum Wet Bulb Temperature	101.7°F	38.7°C
Heat Dissipation	2594 BTU/h	3754 BTU/h
Power Supply		
Input Specifications	**US**	**Metric**
Nominal Line Voltage	100 to 120 VAC	200 to 240 VAC
Range Input Line	90 to 132 VAC	180 to 270 VAC
Frequency Range	47 to 63 Hz	47 to 63 Hz
Power Factor	0.95	0.95
Input Current	8 A at 100 VAC	6 A at 200 VAC
Inrush Current	<150 A at 132 VAC (cold start)	<150 A at 132 VAC (cold start)
Holdup Time	20 ms from zero crossing at 120 VAC	20 ms from zero crossing at 120 VAC
General Specifications	To 104°F and 5,000 ft	To 40°C and 1,524 m

Table B-2. Compaq Server – ProLiant 3000R (Continued)		
Full Output Rating	To 90°and 10,000 ft	To 32°C and 3,048 m (derate linearly)
Minimum Load	1.0 A on + 5 V output 1.0 A on +12 V output 0.5 A on +3.3 V output	1.0 A on +5 V output 1.0 A on +12 V output 0.5 A on +3.3 V output
Ambient Temperature Range		
Operating	50° to 104°F	10° to 40°C
Storage	-40° to 149°F	-40° to 65°C
Dielectric Voltage Withstand		
Input to Output	3000 VAC/min	3000 VAC/mi
Input to Ground	1500 VAC/min	1500 VAC/mi
Common and Differential Mode (superimposed on AC line)	2500V, 1 µs, damped sinusoid 600 V, 10 µs pulse 20% step change in AC input voltage	
SDRAM Dual Inline Memory Modules **CAUTION** **Use only SDRAM DIMMs of the same size, speed, and manufacturer. SDRAM DIMMs from other sources may adversely affect data integrity. Power-On Self-Test (POST) will warn of non-supported SDRAM Dimms.** M15287-082A		
Size	16, 32, 64, 128, 256, or 512 MB single DIMM SDRAM	
Speed	60 ns or faster	
Upgrade Requirement	Bank of one SDRAM DIMM installed or removed at a time	
NOTE: Use only 16, 32, 64, 128, 256 or 512 MB; buffered; gold-connector; ECC; 4-K or 8-K refresh rate SDRAM DIMMs.		
1.44-MB Diskette Drive		
Size	3.5 in	
LED Indicators (front panel)	Green	
Read/Write Capacity per Diskette (high/low density)	1.44 MB/720 KB	
One	One	
Drive Height	One-third	
Drive Rotation	300 rpm	
Transfer Rate bits/sec (high/low)	500 K/250 K	

Table B-2. Compaq Server – ProLiant 3000R (Continued)		
Bytes/Sector	512	
Sectors/Track (high/low)	18/9	
Tracks/Side (high/low)	80/80	
Access Times		
Track-to-Track (high/low)	3 ms/6 ms	
Average (high/low)	169/94 ms	
Settling Time	15 ms	
Latency Average	100 ms	
Cylinders (high/low)	80/80	
Read/Write Heads	Two	
IDE CD-ROM Drive		
	U.S.	Metric
Dimensions		
Height	1.7 in	42.9 mm
Weight	5.9 in	150.1 mm
Depth	8.1 in	208.0 mm
Weight	2.1 lb	950 g
Capacity		
Mode 1, 12 cm	540 MB	
Mode 2, 12 cm	630 MB	
Sustained	150 KB/s	
Access Times		
Full Stroke	<200 ms	
Random	<100 ms	
Bus Rate	4.0 MB/s	
Cache/Buffer	128 KB/s	
Start-up Time		
Single	<7 s	
Multisession	<30 s	
Stop Time	<4 s	

Table B-2. Compaq Server – ProLiant 3000R (Continued)	
Error Rates Soft Error Hard Error Seek Error	 10^{-9} 10^{-12} 10^{-6}
Laser Parameters Type Wave Length Divergence Angle Output Power	 Semiconductor laser GaAlAs 780 +/- 25 nm 53.5 +/- 1.5 degrees 0.14 mW
Audio Interface	
Line Out Connector	
RMS Output Voltage	.07 VRMs
S/N Ratio	80 dB
Channel Separation	65 dB
THD and Noise	.01% @ 1kHz
Frequency Response	20 to 20 kHz, (+1/-3 dB)
Digital Audio Out Connector	2 pin digital audio out connector described in the ARAPI Spec., 2.6, Section 11.1 included. This serial digital audio out conforms to the IEC-958 EIAJ CP-1201 format.
Integrated Dual-Channel Wide-Ultra SCSI Controller	
Drives Supported	Up to seven SCSI-2 and/or Wide-Ultra devices per channel
Data Transfer Method	32-Bit PCI bus master
SCSI Channel Transfer Rate	40 MB/s per channel
Maximum Transfer Rate per PCI Bus	133 MB/s
SCSI Termination	Active Termination
SCSI Connectors	Channel A: 1 internal Channel B: 1 internal, 1 external
9.1GB Hot-Plug Hard Drive	
Rotational Speed	7,200
Logical Capacity	9100
Height	1.0 inch / 2.5 cm
Size	3.5 inches / 8.9 cm
Interface	Wide-Ultra
Transfer Rate Synchronous (Max)	40 MB/s

Table B-2. Compaq Server – ProLiant 3000R (Continued)		
Seek Time: Single Track Average Full Stroke	 1.9 ms 7.5 ms 15.0 ms	
Physical Configuration Bytes/Sector Logical Blocks (in millions)	 512 17,7735	
Operating Temperature	50º to 95º F / 10º to 35º	
Rack-Mounted UPS		
GE Marquette Part Numbers:	421572-015 (Low voltage model) 421572-020 (High voltage model)	
Electrical Input:		
Nominal Voltage:	Low Voltage Model 120 V (default) 100, 110, 120, 127 V (selectable)	High Voltage Model 230 V (default) 208, 220, 230, 240 V (selectable)
Voltage Range:	-30% to +20% at full load for nominal voltages -35% to +20% for short-term brown-outs	
Nominal Frequency:	Low Voltage Model 60 Hz 50/60 Hz if 100 V or 110 V selected	High Voltage Model 50/60 Hz
Connections:	Low Voltage Model 6-foot line cord with NEMA L5-30 plug (Detachable 5-15 1500 VA)	High Voltage Model 16 A (10 A, 1500 VA) IEC-320, plug male inlet
Electrical Output:		
Power Levels: (rated at nominal inputs)	Low Voltage Model R3000: 2880 VA, 2250 W	High Voltage Model R3000h: 2880 VA, 2250 W
Regulation On-Line:	+6% to -10%; within Computer Business Equipment Manufacturers Association Guidelines: (+10% to -15% using extended range)	
Regulation On-Battery (Nominal Voltage ±5%)	Low Voltage Model 115 V for 110, 120 & 127 V 102 V for 110 V	High Voltage Model 230 V for 220, 230, & 240 V 204 V for 208 V
Voltage Wave Shape:	Sine Wave	
Overcurrent Protection:	On-line: Resettable Circuit Breaker On-Battery: Active current limit and short circuit protection.	
Noise Filtering:	MOVs and line filter for normal and common mode noise.	
Connections:	Low Voltage Model NEMA receptacles	High Voltage Model Six or nine IEC-320 outlets
Battery:		

Table B-2. Compaq Server – ProLiant 3000R (Continued)	
Voltage:	24 VDC for 1500 VA, 48 VDC for 3000 VA
Type:	Sealed, maintenance-free, lead-acid
Charging:	Advanced charging for faster recovery; 3 to 8 hours
Backup Time:	5 minutes at full load with a new battery.
Indicators and Controls:	
Serial Communication:	Intelligent serial communication to provide alarms with history, measured, parameters, self-test, and many other features; contact your authorized dealer for Compaq Management software.
Interface:	Ergonomic indicators including Wiring Fault, Battery Service, Communication, Operation, System Normal, bar graphs for Input Level, Battery Charge Level, % Load.
Contact Closures:	Input Failure, Low Battery
Physical Properties:	
Surge Suppression:	Manufactured sith surge suppressors that meet UL 1449
Operating Temperatures:	0°C to 40° (32°F to 104°F) UL tested 25°C (77°F)
Relative Humidity:	0% to 95% non-condensing
Operating Altitude:	Up to 10,000 feet above sea level
Audible Noise	Less than 45 dBA
Dimensions:	R3000: 19 x 5.25 x 22.3 in. (48.2 x 13.3 x 56.6 cm)
Weight:	Low Voltage Model R3000: 132 lbs. (60 kg) High Voltage Model R3000h: 132 lbs. (60 kg)

Table B-3. 21-inch Color Monitor	
GE Marquette Part Number:	411937-004
CRT:	20" 40% Flatter Trinitron CRT with Short Neck CRT Design 90 deflection
Viewable Image Size:	19.8" measured diagonally
Aperture Grille Pitch:	0.25-0.27mm (variable)
Horizontal Scan Range:	30-107 kHz
Vertical Scan Range:	46-160 Hz
Maximum Resolution:	1600 x 1200 @ 85Hz
Color Temperature Presets:	5000 Kelvin 6500 Kelvin 9300 Kelvin 3 User-adjustable settings (Bias/Gain Controls)
Signal Inputs:	Analog RGB: 0.7Vp-p, 75 ohm termination External Sync Signals: Composite 1-5 Vp-p, polarity-free TTL Sync on Green: 0.3Vp-p, negative
Power Requirements:	100-240V AC; 50/60Hz
Power Management:	International Energy Star, NUTEK, and VESA DPMS compliant Operation: 160 watts (maximum) Suspend: 15 watts (maximum) Active off: 5 watts (maximum) Power off: 0 watt
Dimensions (W x H x D):	19.6" x 19.9" x 18.7"
Weight:	68.3 lbs
Operating Temperature:	50°F-104°F (10°C-40°C)
Operating Humidity:	10%-80%, non-condensing
Regulation Compliance:	Safety: UL 1950, CSA 950, EN60950 (TUV, GS mark/ CEmark), SEMKO, NEMKO, EI, DEMKO Emission/EMI: FCC Class B, IC Class B, MPR II (TUV) (full compliance), CISPR22B, TCO '95 X-ray: DHHS, DNHW, PTB Ergonomic: ZH1/618, ISO9241-3.8 Designed for: Microsoft Windows NT and Windows 95 Macintosh Compatible Plug and Play: DDC-1, DDC-2AB
Inputs:	15-pin mini D-sub 5 BNC connector

Table B-4. 17-inch Color Monitor	
GE Marquette Part Number:	408057-008
CRT size:	17" Trinitron®
Viewable Image Size:	16"
Aperture Grille Pitch:	0.25 mm
Screen Treatment:	Anti-Reflective Coating
Horizontal Scan Range:	30-85 kHz
Vertical Scan Range:	48-120 Hz
Maximum Resolution;	1280 x 1024 @ 75Hz
Color Temperature Presets:	5000 Kelvin 9300 Kelvin User-Adjustable
Signal Inputs:	Analog RGB 0.7Vp-p, 75ohm Termination
External Sync Signals:	Separate/Composite TTL, polarity-free TTL Sync on Green: 0.3Vp-p, negative
Input Connectors:	15 pin mini D-sub
Power Requirements:	100-120/220-240V AC; 50-60Hz
Power Management:	International Energy Star, NUTEK, and VESA DPMS Compliant Operation: 120 watts (maximum) Suspend: 8 watts (maximum) Active Off: 8 watts (maximum) Power Off: <1 watt
Dimensions (W x H x D):	16.0" x 17.0" x 16.5"
Weight:	39.7 lbs.
Operating Temperature:	50°F-95°F (10°C-35°C)
Operating Humidity:	10-80% (non-condensing)
Regulation Compliance:	Safety: UL 1950, CSA 22.2 No. 950, EN60950 (TUV, GS mark), NEMKO, SEMKO, DEMKO Emission/EMI: FCC Class B, IC Class B, EN55022, MPR II (TUV) (full compliance), TCO 95 X-ray: DHHS, DNHW Ergonomic: ZH-1/618, ISO9241-3, ISO9241-8 Designed for: Microsoft Windows® 98, Windows 95, Macintosh Compatible Plug and Play: DDC-1, DDC2B/A, DDC2Bi, DDC/CI, DMI Compliant VESA: Generalized Timing Formula

Table B-5. 15-inch Color Monitor	
GE Marquette Part Number:	420609-001
CRT:	15” Trinitron w/short neck design 90° Deflection
Viewable Image Size:	14.0” Measured Diagonally
Aperture Grille Pitch:	0.25mm
Horizontal Scan Range:	30-70KHz
Vertical Scan Range:	50-120 Hz
Maximum Resolution:	1024 X 768 @ 85Hz 1280 X 1024 @ 60Hz
Signal Inputs:	Analog RGB: 0.7Vp-p, 75 ohm termination External Sync Signals: Composite 1-5 Vp-p, polarity-free TTL Sync on Green: 0.3Vp-p, Negative
Power Requirements:	100-120/220-240V AC, 50/60Hz
Dimensions (W x H x D:)	14.5" X 15.4" X 15.1"
Weight:	30.9 lbs
Operating Temperature:	50° -104°F
Operating Humidity:	10-80%, Non-Condensing
Regulatory Compliance:	Safety: UL 1950, CSA 950, EN60950 (CEMARK) Emission/EMI: FCC CLASS B, MPR II, CISPR22B X-ray: DHHS

Table B-6. Client	
GE Marquette Part Number:	410783-201
Description:	NX440LX 266 MHZ PENTIUM II MOTHERBOARD WITH 32MB, VIDEO, ETHERNET, SOUND. NLX DESKTOP CHASSIS WITH FLOPPY DRIVE, [1] EXTERNAL 5.25", [1] EXTERNAL 3.5", [1] INTERNAL 3.5", POWER SUPPLY
Processor	Intel Pentium II processor
Processor Clock Speed	266MHz
Standard RAM	64MB
Hard Disk Drive	4.3G ULTRA ATA EIDE 3.5" (See Table B-7 "Client Hard Drive")
Diskette Disk Drive	1.44MB 3.5”
CD-ROM Drive	Internal Toshiba XM-6502B CD-ROM (See Table B-8, "Client CD-ROM Drive")
Keyboard	Intel enhanced 101 with numeric keypad
Mouse	2-button control
Bar code reader	Keyboard connected
Height (with feet installed)	11.81 cm (4.7")
Width	43.75 cm (17.2")
Depth	44.45 cm (17.5") with chassis lock and cover thumbscrew 43.18 cm (17.0") excluding lock and thumbscrew
Weight (without peripherals)	8.2 kg (18 pounds)

Table B-7. Client Hard Drive	
GE Marquette Part Number:	2000714-001
Description:	4.3G ULTRA ATA EIDE 3.5"
Manufacturer, Model	Quantum, QM304300CR-A
Specifications	
Form Factor	3.5” (low profile)
Interface	ATA/4, Ultra ATA/66
Formatted Capacity (MB)[1]	4,310
Disk Drive Configuration	
Recording Surfaces	2
ATA Logical : Cylinders Heads Sectors	 14,848 9 63
Performance Specifications	
Typical Seek Times [2](ms) Average Track-to-Track Full Stroke	 9.5 2.0 18.0
Average Rotational Latency (ms)	5.56
Rotational Speed (RPM)	5,400
Internal Data Rate (Mb/sec)	Up to 194
Data Transfer Rates (Buffer-to-Host) (MB/sec) Ultra DMA/66 Ultra DMA/33 PIO Mode 4	 66.6 33.3 16.6
Buffer Size (KB)	512
Typical Power on to Drive Ready (sec)	9.5
Reliability Specifications	
Start/Stop Cycles (ambient)	50,000
Nonrecoverable Data Errors (per bits read)	<10 per 10^{15}
Warranty[3] (years)	3

Table B-7. Client Hard Drive (Continued)	
Physical Specifications	
Dimensions-inches (mm) Width Length Height	 4.00 (101.6) 5.75 (146.1) 1.00 (25.4)
Weight-pounds (kg)	1.26 (0.5)
Environmental Limits	
Operating Temperature Non-Condensing Humidity (%)	 (°C) 5 to 55 5 to 85
Non-Operating Temperature (°C) Non-Condensing Humidity (%)	 -40 to 65 5 to 95
Sound Power (bels, typ) Idle Seek	 3.4 3.9
Power Specifications	
Nominal Voltage (V)	+5/+12
Voltage Margin (%)	±5/±10
Typical Power Draw (W) Idle Operating[4]	 6.2 8.8
Peak Current (mA on +5/+12 V)	700/1,830

1. Quantum defines a megabyte (MB) as 10^6 or 1,000,000 bytes.
2. Seek times are at nominal conditions and include settling.
3. This warranty is standard when products are purchased directly through authorized Quantum distributors/dealers. Unless otherwise agreed, a one-year warranty is provided to all OEM purchasing directly from Quantum. End-user warranties provided by computer manufacturers may vary.
4. Operating is 40% seek, 30% read, 20% active, and 10% write.

Table B-8. Client CD-ROM Drive	
General	
GE Marquette PN:	410784-105
Description	Disk Drive CDROM 40X EIDE
Manufacturer, Model	Toshiba, XM-6502B
Interface:	ATAPI
Compatible CD-ROM Standards:	Red-Book, Photo CD, CD-EXTRA Yellow-Book, Video CD, CD-RW (Read) CD-ROM XA, CD-I, CD-R (Read CD-I Bridge, CD-G
Performance	
User data capacity:	650MB
Data Transfer rate - 17.3X - 40X	1,297 - 3,000 KBytes/s
Rotational Speed - 17.3X - 40X	CAV 8,500 rpm
IDE Interface Burst Transfer Rates	16.7 MBytes/s 8.33 Single-word DMA 16.7 Multi-word DMA 33.3 Ultra DMA
Access Time	80ms
Memory Buffer	128Kbytes
Reliability	
MTBF	100,000 hours
Hard Error Rate: mode 1 (with up to 5 retries and layered ECC on)	10^{-15} max
Soft Error Rate: mode 2 (with up to 5 retries)	10^{-12} max
Seek Error Rate	10^{-6} max
Audio	
Number of Channels	2
Frequency Response	20Hz to 20,000 Hz
Signal-to-noise Ratio	83dB Typ.
Total Harmonic Distortion	0.014% Typ.
Line Output	.75V RMS
Environmental	
Ambient Temperature Operating Storage	 5° to 50° C (41° to 122° F) -20° to 60° C (-4° to 140° F)

Table B-8. Client CD-ROM Drive (Continued)	
Relative Humidity Operating Storage	 8% to 80% 5% to 95%
Acoustical Noise	<45dB
Power	
DC Voltage and Current Requirements	5V ±5%, 12V ±5%
Physical	
Height	5.75" (146mm)
Width	1.6" (41.5mm)
Depth	7.6" (193mm)
Weight	1.67 lbs (0.76kg)
Connectors	
DC input	AMP 1-480424-0
IDE Interface Connector	40 Pin ATAPI Standard
Analog Audio Line Output Connector	4 Pin ATAPI Standard
Regulatory	
Certified by the following regulatory agencies:	UL CSA TUV FCC Class B CE CB DHHS

Table B-9. HP LaserJet 4050N Printer	
GEMMS PN	2001162-005
Manufacturer/Model	Hewlett Packard / C4253A
Description	HP LASERJET 4050N Printer, 16 MB RAM, Ethernet (BNC, 10BASET). Parallel and RS-232 9PIN serial interfaces, PostScript Level 2, HP PCL 6, 120V Included: Toner cartridge, 500-sheet paper tray, power cord, drivers, and documentation.
Speed	17 pages per minute (ppm) 133 MHz RISC microprocessor First page out = 15 seconds "RIP ONCE" capability with 16 MB or hard disk option.
Resolution	300 dpi with PCL5e/HP's PostScript Level 2 emulation (PS) 600 dpi with PCL5e/PS HP FastRes 1200 (PCL6, PS) HP ProRes 1200 at engine speed (17 ppm) (PCL6, PS)
Typefaces	100 Scalable TrueType (80 built-in, 30 via HP FontSmart) Euro symbol
Memory Options	8 MB RAM standard (4050/4050 T) 16 MB RAM standard (4050 N/ 4050 TN)
Optional Memory	4, 8, 16, MB EDO DIMMs 4, 8, 16, 32, 64 MB SDRAM DIMM
Mass Storage Options	2 and 4 MB Flash DIMMs Greater than 1GB hard disk
Expansion Slots	3 100-pin DIMM slots 2 enhanced I/O (EIO) slots
Interface	Bidirectional IEEE 1284-compliant parallel CJ3113A - 10/100Base-TX (bundled with 4050 N/4050 TN) HP Fast InfraRed Receiver (FIR) RS232 9-pin serial Paper Handling Connector (PHC)
Optional Networking	10Base-T and 10Base-2 10/100Base-TX Token Ring LocalTalk
Paper Trays	100-sheet Tray 1 Size: 76 x 127 mm to 2 16 x 356 mm (3 x 5 inches to legal) 500-sheet Tray 2 Size: letter, legal, A4
Paper Path	Straight through from Tray 1 to Rear Output Bin or to Top Output Bin
Output Capacity	250-sheet Top Output Bin 50-sheet Rear Output Bin
Paper Handling Options	Duplexer, Envelope Feeder, Optional 500-sheet Universal Tray Assembly

Table B-9. HP LaserJet 4050N Printer (Continued)	
Physical Specifications	
Height	34.3 cm (13.3 inches) 38.5 mm (15.5 inches)
Width	39 cm (15.4 inches) 39 cm (15.4 inches)
Depth	61.64 cm (24.27 inches) 61.64 cm (24.27 inches)
Depth (trays/rear output bin open)	100.76 cm (39.67 inches) 100.76 cm (39.67 inches)
Weight (without toner cartridge)	17.85 kg (39.27 lbs.) 20.71 kg (45.66 lbs.)
Electrical specifications	
Printer State Printing Standby PowerSave (default activation time, 30 minutes) Off	Power Consumption (average, in watts) 330 watts 22 watts 20 watts
Minimum recommended circuit capacity	
Voltage 100-127 Volts 220-240 Volts	Amps 8 amps 4 amps
Power requirements (acceptable line voltage)	Voltage / Hz 100-127 Volts / 50-60 Hz 220-240 Volts / 50-60 Hz
Environmental specifications	
Condition Operating Temperature Relative Humidity	Specification 10 to 32 degrees C (50 to 90 degrees F) 20% to 80%
Acoustic emissions (per ISO 9296)	
Condition Printing, 17 ppm Printing, 8 ppm PowerSave	Specification Lwad = 6.6 bels (A) Lwad = 6.2 bels (A) Lwad = 0 bels (A)
Safety certifications	
Safety	IEC 950:1991+A1+A2+A3 / EN 60950:1992+A1+A2+A3+A4+A11 IEC 825-1:1993 / EN 60825-1:1994 Class 1 (Laser/LED)

Table B-9. HP LaserJet 4050N Printer (Continued)	
EMC	CISPR 22:1993+A1 / EN 55022:1994 Class B (1) EN 50082-1:1992 IEC 801-2:1991 / prEN 55024-2:1992 - 4 kV CD, 8 kV AD IEC 801-3:1984 / prEN 55024-3:1991 - 4 V/m IEC 801-4:1988 / prEN 55024-4:1992 - 0.5 kV Signal Lines, 1.0 kV Power Lines IEC 1000-3-2:1995 / EN61000-3-2:1995 IEC 1000-3-3:1994 / EN61000-3.3:1995 FCC Title 47 CFR, Part 15 Class B (2)) / ICES-003, Issue 2 / VCCI-2 (1)) AS / NZS 3548:1992 / CISPR 22:1993 Class B (1))
Supplementary Information:	The product herewith complies with the requirements of the following Directives and carries the CE-marking accordingly: the EMC directive 89/336/EEC the Low-Voltage Directive 73/23/EEC [1] The product was tested in a typical configuration with Hewlett-Packard Personal Computer Systems. [2] This Device complies with Part 15 of the FCC Rules. Operation is subject to the following two conditions: This device may not cause harmful interference, and this device must accept any interference received, including interference that may cause undesired operation.

Table B-10. Zip Drive Parallel Port	
Performance	
GE Marquette Part Number:	422185-001
Average seek time:	29 milliseconds
Sustained transfer rate: Maximum: Minimum:	 1.40MB/sec. 0.79MB/sec.
Typical throughput:	up to 20MB/minute
Rotational speed:	2941 RPM
Average start/stop time:	3 seconds
Long format time (surface verify):	10 minutes (avg.)
Short format time:	10 seconds (avg.)
Buffer size:	32K
Reliability and Service	
MTBF:	100,000 hours
Service life:	5 years
Bit error rate:	1 in 10^{12}
Disk drop height/shock tolerance:	8ft/1000G
Disk (estimated) shelf life:	10 years
Warranty-drive/media:	1 year/limited lifetime
General	
Disk storage capacity:	Uses 100MB Zip disks
Operating system compatibility:	DOS; Windows 3.1x, 95, NT; Mac OS; OS/2
Interface:	parallel port
Connection type:	Two 25 pin female (allows for printer pass-through)
Power requirements:	5V, 1A continuous, 1.7 A peak
Acoustical noise (operating):	Less than 32 dBA
SCSI termination:	On board, switchable
Dimensions (LxWxH): Metric	 35mm x 133mm x 182mm
Weight: Metric	 454.0 grams
Read/write protection:	Via software (optional password protection)
Operating Conditions	

Table B-10. Zip Drive Parallel Port (Continued)	
Temperature: Operating: Storage: Shipping:	 10° to 32°C -22° to 52°C -40° to 60°C
Relative humidity (non-condensing): Operating: Non-operational:	 10% to 80% 10% to 90%
Vibration: Operational: Non-operational:	 0-7g @ 5-17Hz., 0-25g @ 17-500 Hz. 5g @ 60-500Hz., 2g @ 27-60 Hz., 1.3g @ 5-27 Hz.
Shock @ 11ms duration 1/2 sine wave: Operational: Non-operational:	 7g 100g
Altitude (operating):	10,000 feet maximum

Table B-11. MUSE Network Writer	
GE Marquette Part Numbers:	405864-011 405864-012 (220-240V) 405864-013 (240V)
Type	Thermal dot array (horizontal 1000 dots/inch at 25mm/sec; vertical 200 dots/inch)
Channels	Up to 12
Frequency response	0.01 to 100 Hz, 0.091 to 40 Hz, 0.01 to 20 Hz, user selectable
Sensitivity	5, 10, and 20 mm/mV
Paper speeds	5, 12.5, 25, and 50mm/sec, user selectable
Paper type	Thermal, perforated, 21.59 cm x 27.94 cm (8-1/2 x 11 inch), Z-fold, 300 sheets/ pack (European A4 style paper available.)

Table B-12. Safety	
Item	**Description**
Certification	UL listed, CSA certified, CE according to 93/42/EEC Medical Device Directive
Type of Protection Against Electrical Shock	Class I Equipment
Degree of Protection Against Ingress of Liquids	Ordinary
Handling of Disposable Supplies and Other Consumables	■ Use only parts and accessories manufactured or recommended by GE Marquette. ■ Follow manufacturer's instructions for use for disposable/consumable product. ■ Follow local environmental guidelines concerning the disposal of hazardous materials (e.g. lead acid batteries).
Mode of Operation	Continuous
Patient Leakage Current	Not applicable - no patient connections
Degree of Protection Against Electrical Shock	Not applicable - no patient connections
Maintenance Frequency	■ Recommended user daily visual inspection and cleaning. ■ Recommended six-month routine maintenance checks and test procedures performed by qualified technical personnel.
Repair Guidelines	Calibration instructions, equipment descriptions, and all other service information to repair those parts of the equipment designated as field repairable by qualified technical personnel is available in the service manual.

Index

A

abrasive cleaning agents 7-6
additional information
  hardware upgrades 1-5
  software upgrades 1-5
authorized service 1-14

B

boot floppy
  create 5-16
BOOT.INI file 5-16

C

CDROM 7-8
chapter content 1-3
cleaning
  card slot 7-7
  inside 7-7
  interior 7-7
  visual inspection 7-6
  what to use 7-6
corrupted boot sector 5-15

D

demagnetizer 7-4
device
  name 1-15
disassembly guidelines 7-5
disaster recovery 5-14–5-19

E

emergency repair disk 5-15
equipment
  identification 1-15
  maintenance 7-3
equipment label 1-15
equipment maintenance contract 7-3
Event Log
  review for IMS actitivity 5-6

F

FAT (file allocation table) 5-15
file allocation table (FAT) 5-15
File Server Network Status LEDs 2-29
floppy drive 7-7
fonts
  changing 3-44

H

health hazards 7-3
how to
  clean CDROM drive 7-8
  clean floppy diskette drive 7-7
  clean system box 7-7
  handle tape head assembly 7-6
  read label 1-15

I

immersion in water 7-6
interior cleaning 7-7

L

leakage current tester 7-4
LED
  file server network status 2-29
list of
  maintenance checks 7-16

M

MAC 8 local acquisition 2-35
maintenance
  contract 7-3
  preventive 7-3
  responsibility for 7-3
  schedule 1-14
  supplies 7-4
maintenance checklist 7-16
  list of
    maintenance checks 7-3
manual
  purpose 1-3
  revision history 1-3
master boot record (MBR)
  corrupted 5-15
MBR (master boot record)
  corrupted 5-15
more
  documentation 1-5
multi-use workstation 2-7
MUSE authentication 2-7

N

name of device 1-15
network printer
  installing 3-26–3-34
NT authentication 2-8
NT Service Pack 5-15
NTBOOTDD.SYS driver 5-15
NTDETECT.COM
  missing or corrupt 5-15
NTDETECT.COM file 5-16

O

opening file server for service 7-10

P

patient safety
  health hazards 7-3
peer to peer printing 3-31
preventive maintenance inspection report 7-3, 7-16
print settings
  adjusting 3-43–3-45

printing
peer to peer 3-31
to Novell shared printers 3-30
troubleshooting 3-33
product code 1-15

R

Rebuild Queues 5-21
recovery
disaster 5-14–5-19
registry
backing up 5-15
related manuals 1-5
required tools 7-4

S

safety
warnings 1-13
SCSI configuration information 5-14
serial number 1-15
how to read 1-15
label 1-15
where to find 1-15
service
information 1-14
requirements 1-14
shutdown/restart procedures 5-20–5-22
special tools 7-4
supplies
needed for repair 7-4
part numbers 7-4
tape drive cleaning 7-4
tape head demagnetizer 7-4
symbols
used on equipment 1-9
system I/O board connectors 2-31

T

tape drive cleaning kit 7-4
tape head demagnetizer 7-4
thermal print head
replacement 8-31
thermal writer
print head replacement 8-31
tools 7-4
troubleshooting
basic questions 6-8
operator error 6-8
visual inspection 6-8
Turnkey 2-7
turnkey workstation 2-7

V

virus infections 5-15
visual inspection
cleaning 6-8
outside 7-6
troubleshooting 6-8

W

warning
equipment 1-13