OPERATORS MANUAL

AND

INSTALLATION AND SERVICE MANUAL

8000 - 3487

UNIVERSAL

MODEL NO. 3487/3550

GENDEX-DEL MEDICAL IMAGING CORP.

A DEL GLOBAL TECHNOLOGIES CO.

11550 W. KING AVENUE

FRANKLIN PARK, IL 60131

CUSTOMER SERVICE (847) 288-7022

TECHNICAL SUPPORT (847) 288-7033

FAX (847) 288-7011

THIS DOCUMENT CONTAINS

INSTALLATION, ADJUSTMENT AND

MAINTENANCE INFORMATION

DO NOT DISCARD

Manual Part Number: 8000-3487 Revision G Release Date: March 22, 1996

TABLE OF CONTENTS

Page

I. User Information

A. Control Features 1-1
B. How To Make An X-Ray Exposure 1-4
C. Technical Information 1-5
D. Preventive Maintenance 1-6

II. Installation Instructions

A. Electrical Source Requirements 2-1
B. Unpacking 2-1
C. General Assembly Notes 2-2
D. Opening Control 2-2
E. Interconnect Cables 2-3
F. Preliminary Check 2-5
G. Calibration 2-7
H. Digital Timer Introduction 2-14
I. Digital Timer Function Overview 2-20
J. Digital Timer Phasing. 2-21
K. Digital Timer Accuracy Check-out 2-22
L. Final Compliance Tests 2-26
M. Certification Of Compatibility 2-27
N. Compliance With U.I. Requirement 2-27

Appendix A: Schematics and Circuit Diagrams 3-1

INTRODUCTION

The UNIVERSAL IMAGING INC. generator system covered in this manual will perform reliably when operated, maintained and repaired in accordance with the instructions of this manual. It should be checked periodically and repaired as necessary to insure reliable operation.

UNIVERSAL IMAGING INC. cannot assume responsibility for any malfunction of this equipment resulting from improper operation, maintenance or repair, or if any of its components are damaged or modified.

Anyone using this x-ray machine must know and understand the dangers of excessive radiation exposure. This equipment is sold with the understanding that since its proper use and application is in the hands of the operator and beyond the control of the manufacturer or his agents, that UNIVERSAL IMAGING, INC. disclaims all responsibility for any injury resulting from improper use and application of this equipment.

We at UNIVERSAL IMAGING, INC. are proud of our product and know your x-ray unit will provide many years of useful and enjoyable service. Thank-you for selecting our equipment.

UNIVERSAL IMAGING, INC.

I. USER INFORMATION

A. CONTROL FEATURES

1. POWER LIGHT - lights when system is on.

2. MAJOR kVp SELECTOR - adjusts kVp in approximately 10 kVp increments. Turning the selector clockwise will increase kVp.

3. MINOR kVp SELECTOR - adjusts kVp in approximately 1 to 2 kVp increments. Turning the selector clockwise will increase kVp.

4. MILLIAMPERE SELECTOR - provides selection of the tube current (mA) and focal spot size.

5. RADIOGRAPHIC SECONDS TIME SELECTOR - provides 22 step time selection from 1/60th to 6 seconds. Turning the knob clockwise increases the exposure time.

6. EXPOSURE BUTTON - two-step control. Partial depression initiates rotation of the anode and boosts the tube filament current from the standby level to the exposure level. Full depression initiates the x-ray exposure.

7. BUCKY SWITCH - allows selection of either the wall bucky, table bucky, or no bucky.

8. MILLIAMPERE METER - indicates the actual tube current (mA) during exposure.

9. kVp METER - provides a pre-exposure reading of the actual kVp which will occur during the subsequent exposure. This reading is compensated for each mA selection. For this reason it is important to set the selector (D) first.

10. LINE CHECK SWITCH - when depressed, indicates the voltage is set correctly. If line voltage is set correctly, the kVp meter needle will align with "V" on the kVp meter. If not aligned, adjust line voltage compensator.

11. LINE VOLTAGE COMPENSATOR - provides adjustment for voltage variations in the power line. It is used in conjunction with the line check rocker switch (J) and the line check "V" position on the kVp meter (I). Depress and hold rocker switch, then rotate the selector until the needle is aligned with the "V".

12. ON/OFF CIRCUIT BREAKER - controls power to system, and provides additional over current protection.

△ CAUTION △

DO NOT OPERATE ANY SELECTOR SWITCHES DURING EXPOSURE

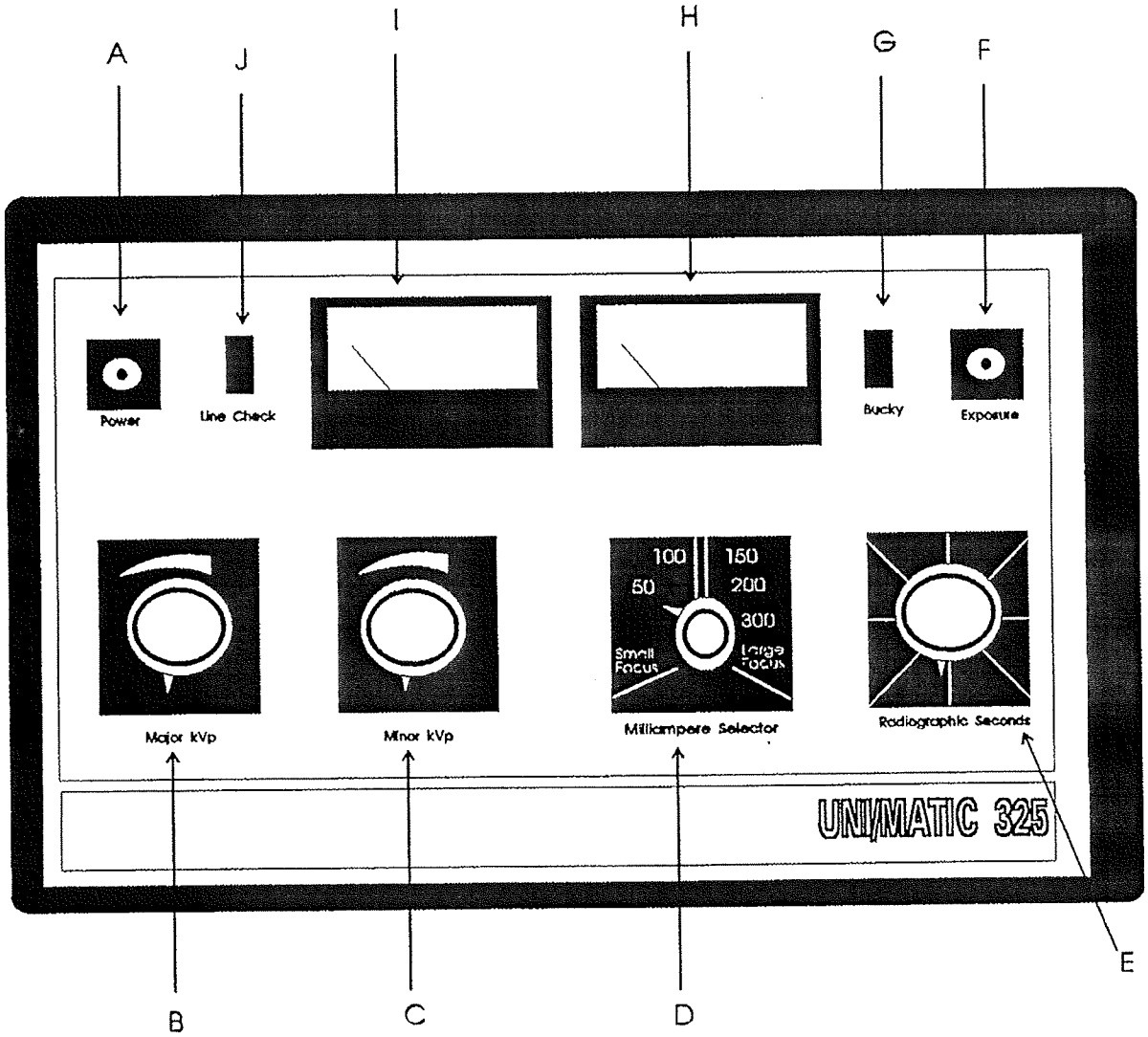

Uni-Matic 325 Control

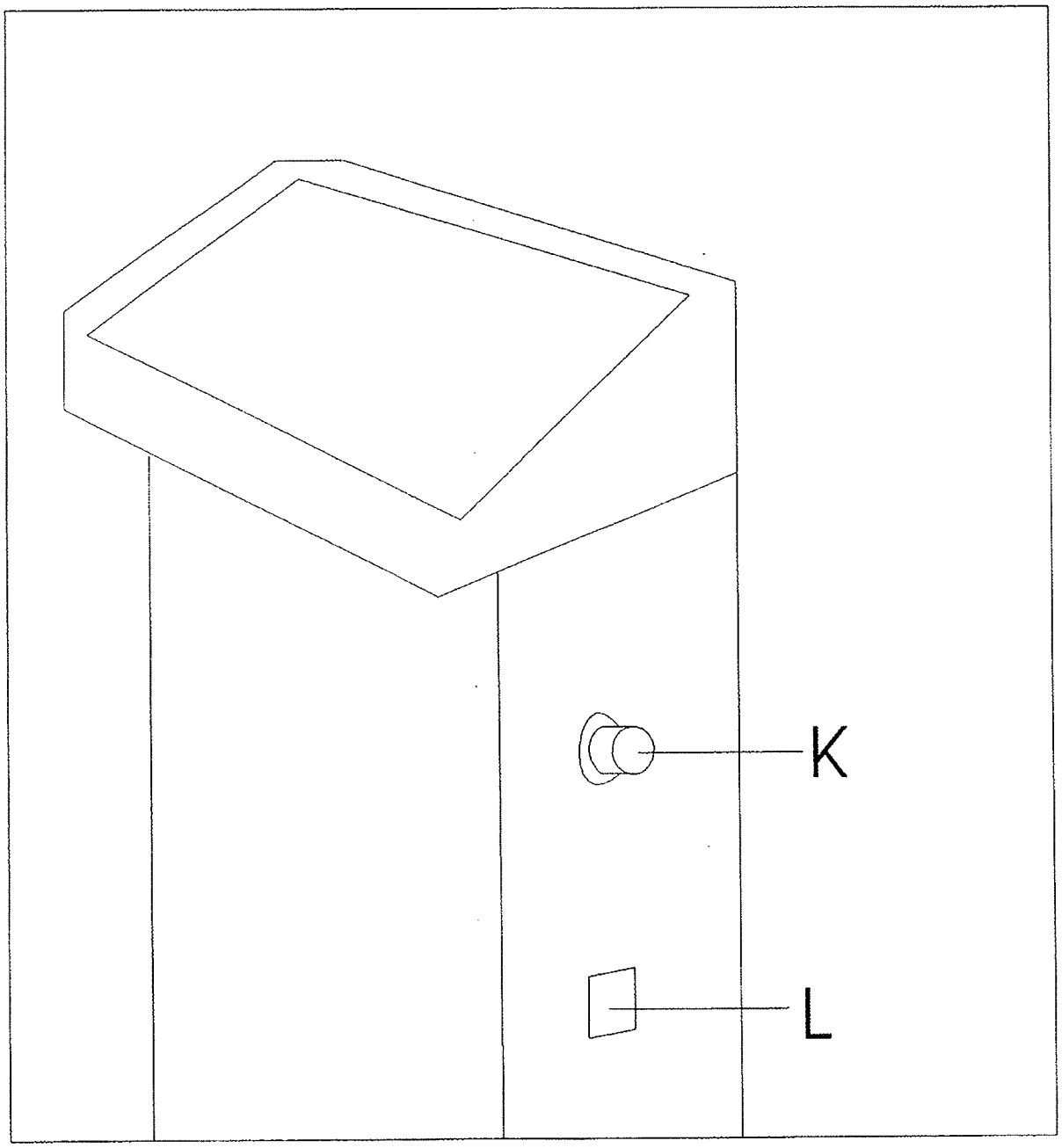

Uni-Matic 325 Control

B. HOW TO MAKE AN X-RAY EXPOSURE

NOTE

It is required to turn the system ON at least 60 minutes prior to processing the patient for the x-ray examination. This will allow sufficient warm-up time to allow the circuitry to stabilize.

1. Turn the system ON and check the line voltage by depressing the line check rocker switch (J) and observe the kVp meter (I). Adjust the line voltage compensator selector (K) to align the kVp meter needle to the "V".
2. In order to prevent tube damage due to thermal shock, preheat the tube anode by perform the following procedure if the system had not been energized for approximately eight hours or if the unit has been off for approximately two hours or longer and the technique to be used requires high mA, high kVp and long times. Verify that the preheat technique factors are below the maximum limits of the load curve of the x-ray tube on this system.

Make first three exposures waiting approximately 30 seconds between exposures @:
75 kVp 200 mA 1 second
wait 60 seconds, then take 1 exposure @:
85 kVp 200mA 1/2 second
wait 60 seconds, then take the last exposure @:
100 kVp 200 mA 1/4 second

3. Select the mA desired (D), which must always be selected prior to kVp.

CAUTION

Do not exceed the x-ray tube rating in selection of technique factors. Refer to the x-ray tube rating chart that is supplied with the tube.

4. Select the kVp desired by observing the kVp meter and adjusting the Major and Minor kVp selectors.
5. Select the exposure time desired (E).
6. Depress the exposure button (F) to the first level. Partial depression boosts the tube filament current and initiates tube anode rotation. These actions require approximately 1 second.
7. Depress the exposure button (F) fully and hold. A bell tone will signify the termination of the exposure.

NOTE

It is permissible to fully depress the exposure button initially. A 1 second time delay is built into the circuit.

C. TECHNICAL INFORMATION

Usable Range of Operation :
mA 50 - 300
kVp 40 - 125

Maximum Unit Rating:
300 mA @ 125 kVp

Rated Line Voltage:
240 VAC 60 Hz

Maximum Line Current at Rated Line Voltage: 140 Amps

Technique Factors Resulting in Maximum Line Current:
300 mA @ 125 kVp

Maximum Line Regulation:

$$\frac{VL - VL}{VL} \times 100 \text{ kVp}$$

(@ 300 mA and 125 kVp)

VN - "No Load" Line voltage
VL - Line Voltage under full load

Duty Cycle
100 mA @ 125 kVp 4%
200 mA @ 125 kVp 2%
300 mA @ 125 kVp 1%

MAXIMUM DEVIATION

The maximum deviation given here for individual control settings are broad and do not reflect on the ability of the x-ray unit to conform with the Reproducibility and Linearity requirements of the Bureau of Radiological Health.

KILO VOLTS

+/- 20% of the full scale value within a range of 40-125 kVp. The basis upon which the maximum deviation of kVp as stated is a sphere gap test, or a calibrated high voltage bleeder unit such as the Machlett Dynalyzer.

MILLIAMPERE

+/- 10% of selected mA within a kVp range of 50-125 kVp. +/- 20% of selected mA within a kVp range of 40-49.9 kVp. The measurement basis upon which the maximum deviations of mA are stated is a D.C. millimeter calibrated against a laboratory standard meter, in series with the x-ray tube.

TIMER

+/- 0 Pulse for time settings in 1/120 - 1/10 second range

+/- 1 Pulse for time settings in 3/20 - 6 second

The measurement basis upon which the maximum deviations of exposure time is stated are half cycle impulses of the 60 hertz power line measured at the primary winding input to the high voltage transformer or in the secondary circuit by means of a high voltage bleeder unit and an Oscilloscope.

D. PREVENTIVE MAINTENANCE

In order to assure continued safe performance of the equipment and compliance with applicable Federal and State regulations, the following Preventative Maintenance Program must be adhered to:

A. SERVICE PERSONNEL

Effective preventative maintenance requires the use of specifically trained and experienced medical x-ray apparatus service personnel. It is the User's responsibility to select personnel who are so qualified, or to consult with the factory in the event recommendations are required.

B. FREQUENCY

Inspection and required service should be performed within 30 days after installation and every 6 months thereafter.

C. REQUIRED MAINTENANCE

1. CALIBRATION

Verify the accuracy of kVp, mA, time and calibrate as necessary according to the instructions in Section II.

2. CONTACTORS AND RELAYS

Inspect electromechanical contactors and relays for pitting, poor contact, loose or missing parts. Replace if necessary.

3. HIGH VOLTAGE TRANSFORMER

a. Check transformer oil level. Proper oil level should be within 1/2" to 3/4" below the bottom side of the cover. To replenish transformer oil, fill with Diala-Ax oil only.

b. Check for clean, tight connections for the primary cables. Clean and tighten as necessary.

4. HIGH VOLTAGE CABLES

Inspect high voltage cable bushings at the transformer and rotating anode tube for signs of carbonization, tracking or moisture.

5. AUDIBLE & VISUAL EXPOSURE INDICATORS

Confirm that the audible indicator which indicates an x-ray exposure and the visual indicator (mA meter) which indicates the production of x-rays, are functioning correctly.

6. INSPECT AND TEST DIALS AND KNOBS

Inspect knobs on timer and kilo voltage selectors and any other adjusting knobs to be sure that the pointer is indicating to the proper value.

. . . . . .

. . . . . .

. . . . . .

. . . . . .

. . . . . .

PERIODIC MAINTENANCE RECORD

EQUIPMENT DESCRIPTION:

Catalog No. _____ Trade Name (if any) _____

Model(s): _____

Serial Number (s) _____

Date of Original Installation _____

IMPORTANT: This document should remain with the equipment at all times.

Record satisfactory accomplishment of required maintenance activity below. (See Maintenance Schedule for Radiation Safety of X-ray Apparatus).

Date Performed	Check if Tube Replacement Only	Qualified Organization Performing Service: Name and Address	Signature of Tester

II. INSTALLATION INSTRUCTIONS

A. ELECTRICAL SOURCE REQUIREMENTS

Values given in the table below are taken from NEMA Standards for Minimum Power Supply requirements for X-ray machines. These requirements are for a single x-ray machine. If more than one x-ray machine or other equipment is connected to the same power line, the power line capacity must be increased accordingly.

Nom. Line voltage :
240 volts single phase.

Current Rating : 140 amps

Wire Size from Power Transformer to Switch Box:
50 ft. #2 , 100 ft. #00, 200 ft. 250 mcm

Minimum Circuit Breaker Rating:
70 amps.

Line voltage Regulation:
at maximum rated line current must not be greater than 5%.

Percent line voltage regulation

$$= \frac{(VN - VL)}{VL} \times 100$$

VN = No load line voltage.
VL = Line voltage at maximum line current.

Alternate line voltage which will provide normal operation are indicated on the wiring diagram of the particular model.

B. UNPACKING

1. Examine all cartons carefully at time of delivery. If damage is apparent, have delivering driver write a "bad order" note on all copies of the freight bill and sign it. Should you discover concealed damage, immediately notify the transportation agent and ask for an "Inspection Report of Damage". Carriers will not accept concealed damage claims if filed after 15 days from date of receipt of merchandise.

   Open crates and cartons carefully and do not dispose of them until you have located all parts and the machine is fully assembled.

2. Check the oil level in the transformer to be sure that none had been spilled out through improper handling in shipping. At room temperature the oil level should be 1/2" to 3/4" below bottom side of cover.

C. GENERAL ASSEMBLY NOTES

1. The control is shipped with a 13′ line cord and a 25′ control-transformer cable to facilitate a wide variety of control and transformer arrangements.
2. Electrical power must be supplied to a switch and fuse box located in a position readily accessible from a control location. (National Electrical Code requirement).
3. Most State regulations require the operator's station at the control to be behind a protective barrier. Consult your local regulations for specific requirements.
4. Once the transformer has been set in place, loosen the bent screw on the top of the transformer to permit expansion of oil with temperature changes. Use one of the plastic receptacle covers to cover the vent screw (oil filling) so that possible contamination of the transformer oil will be avoided.

D. OPENING CONTROL

The control features serviceability from the front of the cabinet. In very rare cases where access to the rear is required, a removable panel is supplied on the rear of the cabinet.

To Open:

1. Loosen the two screws, one on each side of the control.
2. Grasp the top of the control under the rear lip, pull up and rotate forward.

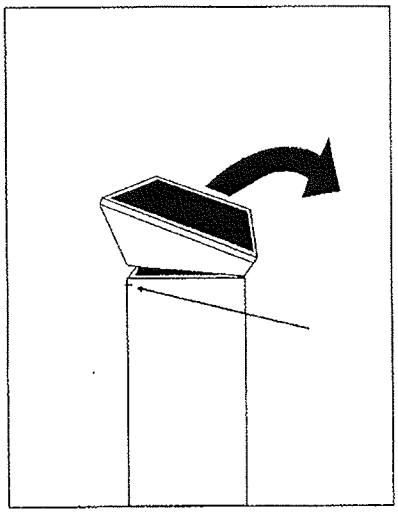

3. From the inside of the control, remove the two thumbscrews that hold the front panel of the control to the cabinet.
4. Pull up on the handle in the middle, on the top rear of the front panel until the bottom portion disengages from the cabinet; then push the lower portion of the panel out and lower it to the floor. Remove from front of the control and place aside.

E. INTERCONNECTING CABLES

1. Uncoil the control-transformer cables. Connect the loose ends to the H.V. generator, checking each wire terminal marking before connecting to terminal post with corresponding marking.
2. The control provides a 5 wire rotor cable capability. Connect leads marked 07, 08, and 09 to the terminal strip so marked in the control. If the tube has a thermal cutout switch, attach leads to terminals marked "T5" and "T6" on terminal strip in the control. If not, connect a jumper across "T5" and "T6" of terminal strip.
3. Bucky Cable Connection:
   a. When a grid cabinet is used, no electrical connections are needed and terminals B1 and B2 are jumped (connected together).
   b. 14 x 17 Liebel Flarsheim Bucky - When a reciprocating wall bucky is used, connect the bucky cable leads to corresponding terminals on the control bucky terminal strip, first removing the jumper from B1W to B2W. Note that a 3 wire connection is used; terminal B2W/B3W are connected in the control so that a 3 wire bucky cable can be used by jumping B2 and B3 at the bucky and connecting the cable B1, B3, and B4 at each end.

      Repeat as necessary for reciprocating table, using terminal B1T, B3T, and B4T.
   c. 14 x 36 Midwest Bucky - a four wire connection is required as follows. Remove jumper in control between B1W and B2W.

Control Terminal	Midwest Bucky Terminal markings If Not Purchased Thru U/AI				Midwest Bucky Terminal Markings If Supplied by U/AI
Connect	B1W	To	B2	or	B1
Connect	B3W	To	B1	or	B3
Connect	B4W	To	B4	or	B4
Connect	F1	To	B3	or	F1

4. Connect High Voltage Cable as Follows:
   a. Extreme care should be used when handling the high voltage cable to avoid the possibility of damage to the plugs or the contact pins on the end of these plugs.
   b. Before inserting cable plugs into the transformer or the tube receptacle, be sure they are clean and dry.

      Corona-suppresser gaskets are supplied, but the installer has the option of using them or vapor proofing compound. Use one or the other, but not both. Thoroughly clean the insulating surfaces of the plug and receptacle using a clean, dry, lint-free cloth. Particular care should be given to cleaning the flat insulating surface between the contact pins and the cylindrical insulating surface, i.e., the surface which will contact the corona-suppresser gasket. Do not touch the insulating surfaces with hands after cleaning.

c. Keep the corona-suppresser gasket clean and dry. A thin film of conducting material deposited by dirty hands may render the gasket totally ineffective. If in doubt, clean the gasket with 1.1.1 trichloroethane and handle it thereafter with a clean, dry, lint-free cloth.

d. Slide the corona-suppresser gasket over the contact pins at the end of the plug.

e. Check to see if a corona -suppresser gasket has not been left in receptacle accidentally. Two corona-suppresser gaskets in one receptacle would not permit complete insertion of plug and might cause damage if plug were forced.

f. Insert the plug in its receptacle and screw on the cable nut as tightly as possible, using two hands to grip the nut. Do not use a wrench, however.

⚠ CAUTION ⚠

Be sure that anode connects to anode and cathode to cathode. The receptacles on the transformer and tube are marked with "A" for anode and "C" for cathode. The anode receptacle of the tube can be further identified as beige the receptacle near the end where the stator cord emerges. Both high voltage cables use Federal bushings and are identical in construction. Therefore, they can be used for either anode or cathode.

5. Electrical Lock and Collimator Power Supply

Terminals marked "C1" and "C2" in the control chassis provide 24 VAC (unfused) to supply power for collimators or accessories requiring this voltage.

This 24 VAC supply eliminates the need for a separate power supply when using the Duocon M. Collimaster M, or equivalent. Connect the clack and white wires to "C1" and "C2" and the green wire to ground.

Terminal marked "DC+" and "DC-" in the control chassis provide 24V (fuses) to supply power to the electrical locks.

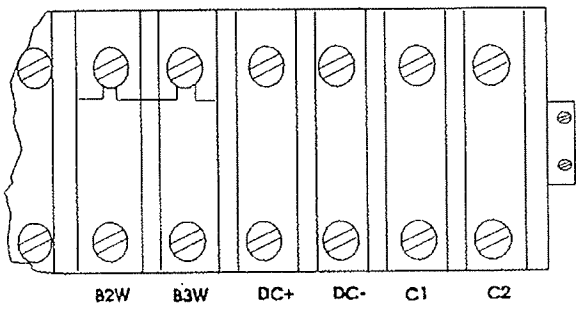

6. Line Cable

Insure main disconnect box is OFF. Uncoil line cable and connect loose end to appropriate terminals in the switch and fuse box. Double check to be sure that the ground wire is connected to a good ground connection LEAVE MAIN DISCONNECT OFF.

F. PRELIMINARY CHECKS (PRIOR TO GENERATING X-RAYS

1. Adjust control for existing line voltage.

   Measure the line voltage at the main disconnect box and relocate the line voltage adjustment wire "12M" on the terminal strip above the auto transformer, to the terminal that corresponds closest to the line voltage. The terminals are marked 110, 190, 210, 230, 240, 250 and 270.
2. Disconnect the wires marked "P1" and "P2" at the high tension transformer and insulate with electrical tape.
3. Select 200 mA, set the minor kVp selector fully counterclockwise and the major kVp selector to mid-range.
4. Turn the main disconnect ON and then turn the generator ON. Depress and hold the "line check switch" while rotating the line compensator switch until the kVp meter needle points to "V" of the meter scale.
5. While observing the filaments through the port of the x-ray tube, select each mA station and verify that the appropriate filament, large or small, is lit and that there is only one filament lit at a time.
6. Actuate the first stage of the exposure button, observe the following, and then release exposure button:

   All relays energizing and some de-energizing, x-ray tube rotor should be heard running and after a short delay, approximately one second, the K2, K3 and K4 relay should open.
7. While looking into the port of the x-ray tube, actuate first stage of exposure button and verify proper "filament boost" operation and direction of anode rotation. The selected filament should glow bright, "boost", when the first stage of the exposure button is activated and should become dimmer, "de-boost", when exposure button is released.

   The direction of anode rotation should be determined be viewing the anode from the cathode end and should be as follows:

UNIVERSAL TUBES	Counterclockwise
EUREKA TUBES	Clockwise
MACHLETT TUBES	Counterclockwise

8. The 325 generator is designed with and adjustable "kVp" Compensator Circuit" and should be spot checked to verify that it is operating properly.
   a. With power OFF, connect and AC voltmeter, capable of reading 0-300 VAC, to PS and PF terminals of the space charge transformer (TSCC). This will allow measurement of the unloaded H.T. primary voltage.
   b. Turn unit on and adjust the major and minor kVp selectors until 200 VAC is indicated on your voltmeter.

Compare kVp meter indication for all mA stations to the following:

mA STATION	METER READING
50	112 +/- 2 kVp
100	107 +/- 2 kVp
150	104 +/- 2 kVp
200	98 +/- 2 kVp
300	81 +/- 2 kVp

If the kVp meter indication differs from the references given, proceed to the kVp accuracy test before readjusting the kVp Compensator Adjust Circuit.

9. Turn the system OFF and reconnect "P1" and "P2" at the high tension transformer.

G. CALIBRATION

The 325 generator is fully tested in factory prior to shipment. The unit is shipped set for 240 VAC operation and with the RXS and RXL filament, adjust slider bands in the maximum resistance position, and RSCC resistor bands set to "approximate" positions, probably requiring fine adjustments only.

If the unit is connected to a nominal 240 volt power line with a regulation of not more than 5%, the calibration required will normally be limited to calibrating the mA circuit and verifying the accuracy of the kVp and time. This assumes use of standard interconnecting cables, no shipping damage, and that the test equipment used is calibrated.

If the unit is connected to a power line that exceed 5% regulation and equipment is not available to measure and calibrate actual kVp, then there is no guarantee that the calibration of the unit will be acceptable and the unit should not be connected.

1. Switch the unit "ON". Depress and hold the "line check switch" while rotating the line compensator switch until the kVp meter points approximately to "V" of the meter scale. Then, allow at least 60 minutes of warm up time to stabilize the circuitry before proceeding with the calibration.

2. mA CALIBRATION

⚠ CAUTION ⚠

Observe X-ray Tube Rating Charts to prevent overloading of Tube.

A. Milliammeter Calibration:

This test requires a DC milliammeter having an accuracy of 1% or better, and of known calibration. Connect the test milliammeter by removing a lead from terminal (M1) in the control chassis and connecting that lead to the test milliammeter and the other lead from the test milliammeter to the point that (M1) was removed from. If the test meter read backwards, reverse the test meter leads. With the filament resistor bands set for nominal values, make x-ray exposures and read both meters at each of the milliammeter selector values and record the control milliammeter error. If the error exceeded 5% of full scale, replace the milliammeter. Do not confuse milliammeter error with improper adjustment of X-Fil resisters: for this test you compare the milliammeter readings whenever they are.

B. mA Calibration

Involves two basic operations (1) adjusting overall mA magnitude (filament resistors RXS, RXL); and (2) obtaining mA balance (space charge RSCC adjustment). The leads (from the mA selector switch) which connect to the slider bands of RXS, RXL, and RSCC are stamped with numbers corresponding to the mA stations and these are the slider band leads that will be adjusted to obtain proper mA.

Adjustment bands on RXS resistor are for small focal stations and adjustment bands on RXL are for large focal spot station. Notice that part of resistor RB is common to both filaments and any adjustment to the slider on the right of resistor RB will affect all mA settings.

CAUTION

During calibration of a new tube or one that had not been used at the higher kVp levels: follow manufacturer procedures for seasoning the tube.

a. Select 150 mA and 80 kVp.

b. Adjust the 150 mA station slider band on the resistor RXL to produce approximately 155 mA. Moving the slider band to the right increases mA. Adjust resistor RXS fro small focal spot stations and resistor RXL for large focal spot stations. Notice that part of resistor RB is common to both filaments and any adjustment to the slider to the right will affect all mA settings.

c. If means are available, measure kVp to verify kVp meter

d. Select 50 kVp and note the mA produced. Select 125 kVp and note the mA produced.

CAUTION

During calibration of a new x-ray tube or one that has not been used at the higher kVp levels; increase kVp in 10 kVp increments, making several exposures at each setting to check for tube instability

Illustration of Proper mA Calibration

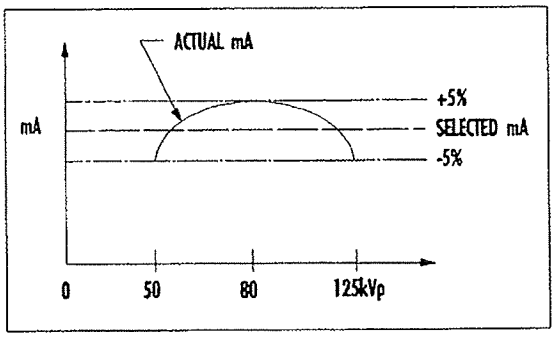

e. Adjust the 150 mA slider band on resistor RSCC until the mA at 50 and 125 kVp are approximately equal. If the mA at 125 kVp is higher than that at 50 kVp, move slider band on RSCC to the right; if lower, move slider to the left.

f. Select 80 kVp and adjust the 150 mA slider on resistor RXL for 155 mA.

g. Check mA tracking from 50 to 125 kVp and fine tune as required. The RSCC resistor adjustment is used to equalize to mA at the 50 and 125 kVp point. The RXL resistor adjustment is used to raise or lower the mA at all kVp points.

The unit is capable, by fine tuning, to track within 5% of selected mA from 50 to 125 kVp. Normal tracking will result in a low point at 50 and 125 kVp, being approximately equal, and a high point at approximately 80 kVp.

h. Perform steps "a" through "g" for the remaining mA stations on the large focal spot and then on the small focal spot.

In steps "b" and "f" use the following:

mA Station	mA
50	52
100	105
200	210
300	315

3. kVp ACCURACY TEST

a. kVp Meter Calibration -

This test requires a 300 volt AC volt meter having and accuracy of 1% or better, and of known calibration. Connect this test volt meter across the kVp meter terminals in the control. Turn on the machine and vary the voltage across the kilo voltmeter by means of the kilo volt selector switches. Record the voltmeter and kilovoltmeter readings and compare with the table below. The kilo voltmeter calibration error should not exceed +/- 2% of full scale.

Scale	Volts
20	34.6
30	51.8
40	69.1
50	86.4
60	103.7
70	121.
80	138.2
90	155.5
100	172.8
110	190.1
116V	198.7
120	207.4
125	216

b. Actual kVp -

Must be measured with a H.V. Bleeder Tank or equivalent method at all mA settings throughout specified kVp range; and the results must not exceed published specifications.

c. kVp Compensating Circuit Calibration

A small printed circuit board identified as "kVp COMP. ADJUST" is used to compensate the prereading kVp meter for designated selections if mA loading. The board is located near the top of the electric chassis of the control and consists of:

5 Independent Offset Pots (1 for each mA station)

1 Common Slope Pot

The location and identification of the pots on the board are as shown:

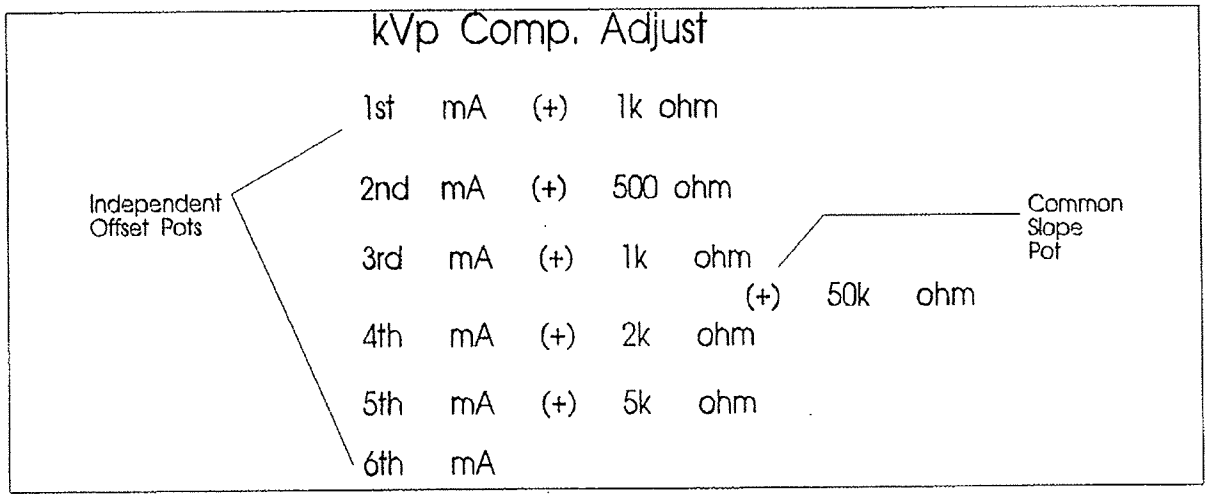

The "Independent Offset Pots" provide adjustment of the kVp meter for corresponding mA selection throughout the kVp range with a slightly diminishing response as kVp increases in value; they are intended for low kVp adjustment. The "Common Offset pot" is used solely to keep the independent offset pots in useful range of adjustment. The "Independent Slope Pots" provide adjustment of the kVp meter for corresponding mA selection throughout the kVp range with greater response at higher kVp; they are intended for high kVp adjustment.

The kVp meter compensating circuit has been factory adjusted and tested, however, if it is determined that the kVp meter compensating circuit requires calibration proceed as follows:

1. Connect an AC volt meter which is capable of reading 0 - 300 VAC to the rotor terminals of the major and minor kVp selectors. This will allow measurements of the unloaded HT primary voltage.
2. Select 200 mA, use the provided "Typical kVp Characteristic" Chart as a reference.
3. Using the major and minor kVp selector switches; select 50, 80 and 120 kVp. Make a .100 sec exposure at each of these kVp settings.

4. Measure the AC voltage at each kVp setting. Compare the measured voltage and the actual kVp generated against the kVp Characteristic Curves provided.
5. If there is a significant error (>10% of full scale) between the two sets of data, we recommend that each mA station be tested in the same manner and data recorded.
6. After having tested all mA stations, a set of kVp characteristic curves can be generated for this installation. Any of the mA stations that indicate an inaccurate kVp should be adjusted using the newly generated kVp Characteristic curves. use the "Independent Offset" pots for these adjustments.
7. The control must maintain these levels of accuracy:

   kVp +/- 20% of full scale within a range of 40 - 125 kVp
   mA +/- 10% of selected within a range of 50 - 125 kVp
   mA +/- 20% of selected within a range of 40 - 49 kVp

8. The "Common Slope" pot should not need to be adjusted, however if it is determined an adjustment is required, this adjustment will effect the kVp indication of all mA stations. This pot will have the most effect at higher kVp settings.

TYPICAL kVp CHARACTERISTIC CURVES FOR UNI-MATIC 325 GENERATOR

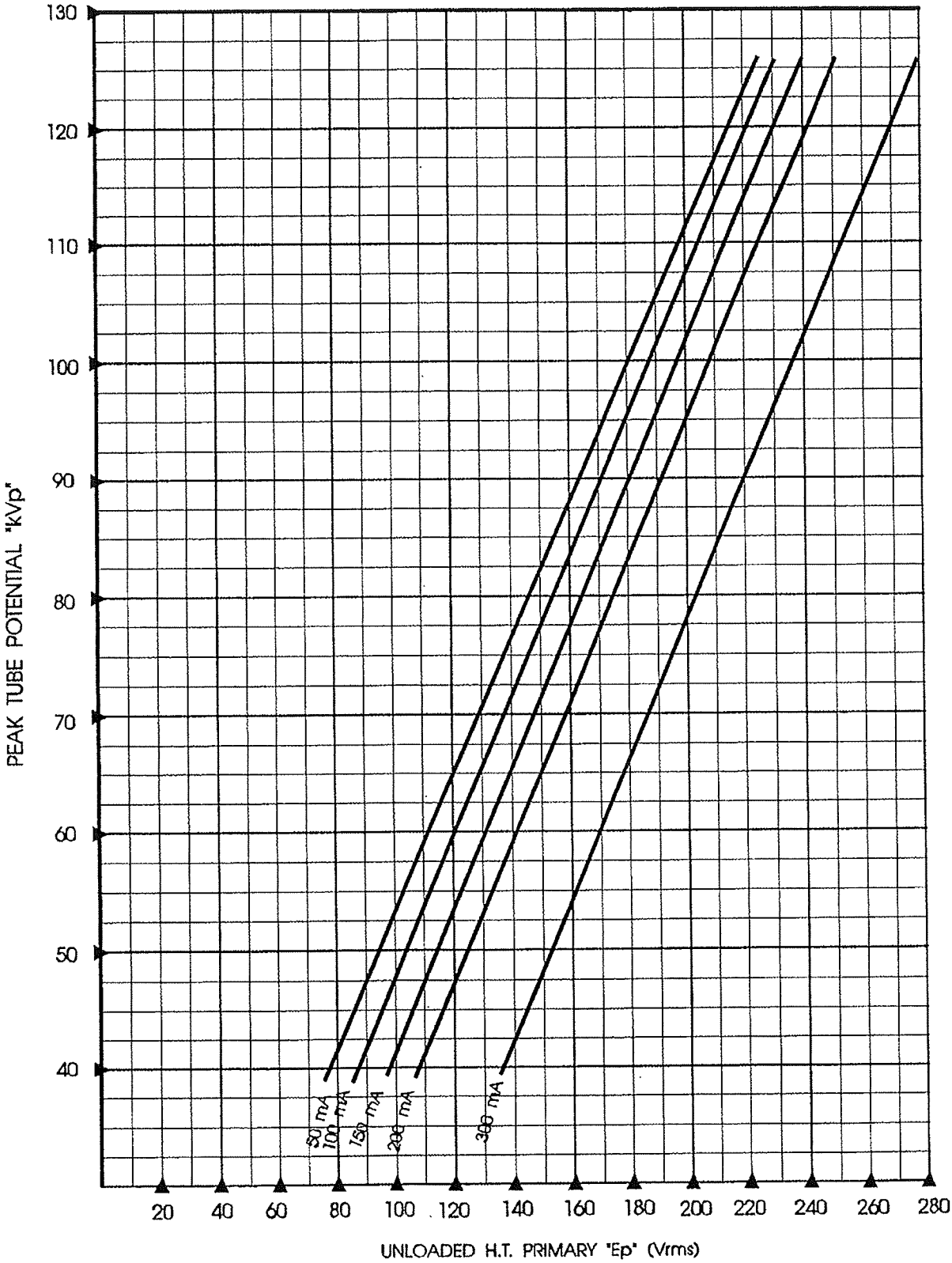

4. CALIBRATION OF THE TUBE CURRENT SENSING RESISTOR

Inside the Control, mounted on the Main Chassis panel in the upper right corner above the RB resistor, is located the Tube Over current Protection Resistor assembly. This assembly consist of two resistors, one is a fixed 300 ohms (RF) in series with a variable 150 ohm resistor (RV). The RV resistor will allow the Installer to control the circuit breaker trip time. The assembly has been factory tested and adjusted. However, a different time setting maybe necessary for a particular installation, dependent upon the x-ray Tube rating, the operator desired techniques and the tube rating.

If longer exposure times are required adjust the band on the RV resistor to the left so that the total resistance of the two resistor is less. Be sure to carefully check the tube rating chart before deciding upon a difference resistance value (trip time), to verify the tubes' maximum power-time limitations.

i.e. 300 mA x 120 kVp x_?????_ sec.

Approximate trip times at specific resistance values for both the Airpax breaker and the Heineman circuit breaker.

AIRPAX

TUBE CURRENT	RESISTANCE	APPROX TRIP TIME
300 mA	350 ohms	.5 sec
300 mA	325 ohms	.75 sec

HEINEMAN

TUBE CURRENT	RESISTANCE	APPROX TRIP TIME
300 mA	400 ohms	.5 sec
300 mA	325 ohms	1.0 sec

H. DIGITAL TIMER INTRODUCTION

The Digital Timer is specifically designed to provide accurate and safe x-ray exposure timing.

The circuit incorporates CMOS logic components for electrical noise immunity and an EPROM (Read Only Memory) for converting the position if the operator's time selection switch to a specific number of impulses. The EPROM is programmed to convert the time scale indicated on the 23 position time selector switch to specific numbers of line impulses.

The electronics include a multitude of noise removing and signal conditioning circuits and is designed to provide reliable timing in the harsh electrical environment of a x-ray generator.

The circuit is completely digital in design and counts the actual pulses received by the High Tension Transformer. The circuit, therefore, is not a "timer" but is a module that terminated the x-ray exposure when the counted pulses match the number of pulses set by the position of the time selection switch.

The number of impulses, programmed and received, will always produce the exposure time in units of line pulses (8.333 ms for 60 Hz, 10ms for 50 Hz) that is indicated on the dial adjacent to the time selection switch.

NOTE

The DIGITAL TIMER is totally digital in nature and does not require nor include adjustments.

During an exposure, the 50 or 60 hertz current pulses sent to the High Tension Transformer are counted and continuously compared to the number of pulses selected by the operator. When the exact number of pulses have been counted, the timer removes the gate drive pulses from the SCRs, ending the exposure.

The x-ray exposure is signaled by a continuous audible tone and a needle deflection of the mA meter on the operator's control panel which will indicate a specific value.

The duration of the tone is "stretched" by about .5 seconds so that even the shortest exposure time of .0083 seconds is clearly indicated.

The exposure in progress can be terminated at any time during an exposure by releasing the EXP switch.

At the end of each exposure, a core memory latch becomes set to properly steer the polarity of the first pulse of the next exposure to the correct SCR. This is to eliminate inrush currents due to normal residual magnetic energy stored in the core of the high tension transformer from the last exposure.

FAULT DETECTION

One of the many safety features is in the monitoring of the SCRs to detect leakage currents and false firing. If an SCR leaks or switches on at any time without an exposure request, the fault current is routed to a small signal transformer, not to the high tension transformer.

The fault current is detected and results in preventing the mechanical safety contactor from being energized, and inhibits the EXP functions of the generator. If PREP is in process and a fault is detected, the safety contactor will be released to force-stop the exposure. Again, the EXP functions are then blocked to prevent another exposure attempt.

The mechanical safety contactor cannot be re-energized by a PREP command until the fault is cleared. This will prevent the High Tension Transformer form receiving uncontrolled energy in the event that the SCR(s) are permanently gated by a circuit failure or damaged SCR(s).

This inhibited condition will last for a timed interval of 5 seconds if the fault was temporary in nature.

NOTE

The operator is informed of faults, and the resultant inhibited operation, by the fact that the control will be totally disable with regards to any exposure function.

After the 5 seconds interlock, the fault circuit will automatically rest to allow normal operation to resume. The automatically reset timed-inhibit function is incorporated to allow normal operation to resume if the fault was temporary such as might be caused by a line transient.

If, however, the fault persists, the fault circuit will not reset and the timer will continuously inhibit operation until corrective measures are taken.

In the event that the timer overruns the number of pulses selected and starts producing and extra unwanted x-ray pulse due to, for example, a component failure during an exposure, the SCR drive signals are immediately blocked. And, the power to the High Tension Transformer is forcibly removed by opening the safety backup contactor.

The safety contactor is delayed in dropping out for 4 ms to allow normal SCR shutdown to reduce the possibility of power switching damage to the contacts of the safety contactor. The fault then activated the 5 second fault inhibit to prevent operation. Again, the timer is reset after the 5 second delay to allow normal operation if the fault was temporary.

The binary encoded time switch position signals originate in a separate circuit; if no encoded signal is imputed to the DIGITAL TIMER due to, for example, a blown fuse in the power supply for the separate circuit, the timer will block exposure attempts since this is a "zero time selected" condition.

NOTE

Several safety functions, therefore, are designed into the timer circuit including detection of self-firing of the SCRs, timer over-run and failure to make a time selection (all switch positions open).

As a major aid in troubleshooting the timer, a group of LED indicators on the timer PCB shows the status of each of the 5 binary time-select data lines to aid in verifying external time selection and in detection external time-selection faults.

The circuit incorporates CMOS logic components for electrical noise immunity and EPROM (Read Only Memory). All electronic components, except for the EPROM, are standard parts available through most electronic parts distributors. While the EPROM is also readily available, the program is unique, therefore, a replacements EPROM must be obtained from the factory if one is required.

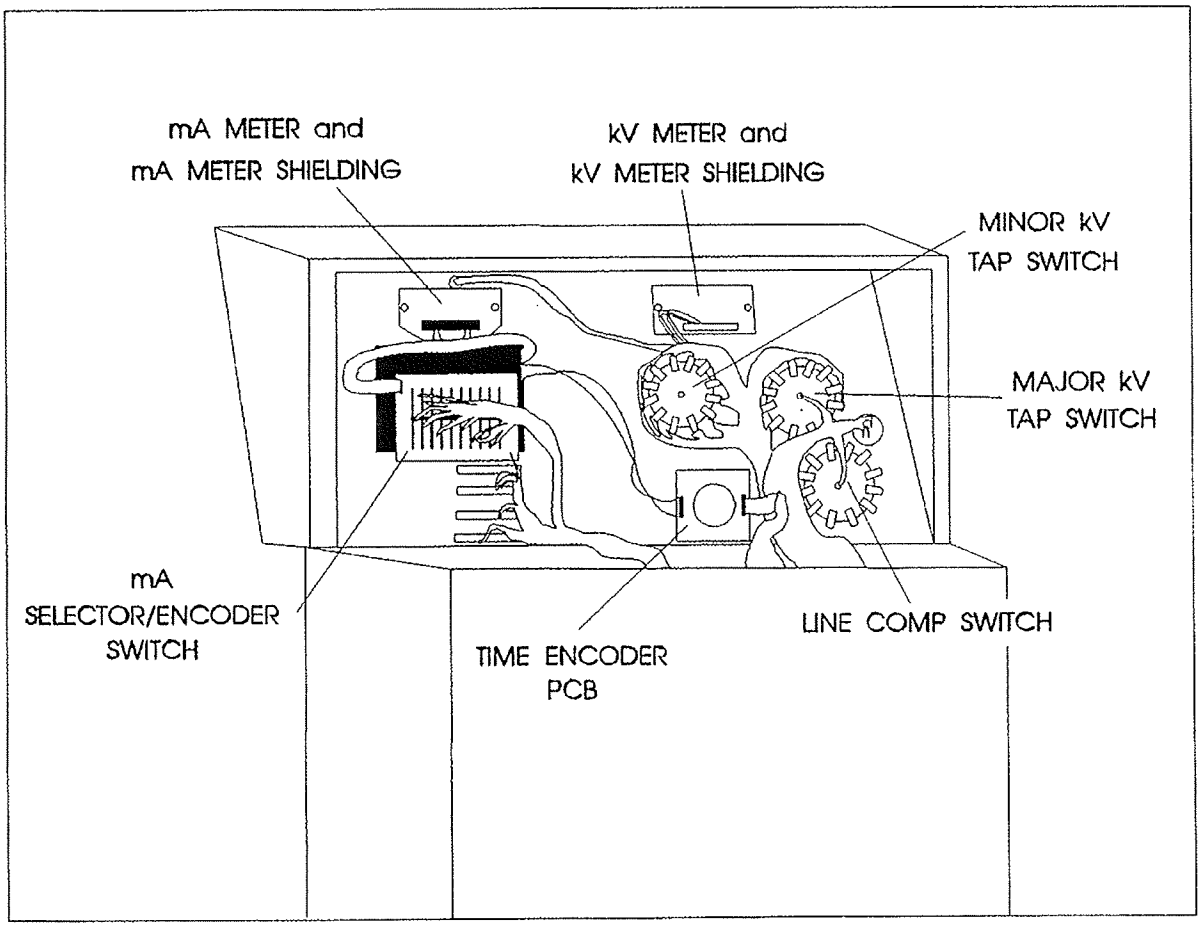
mA METER and
mA METER SHIELDING
kV METER and
kV METER SHIELDING
MINOR kV
TAP SWITCH
MAJOR kV
TAP SWITCH
mA
SELECTOR/ENCODER
SWITCH
TIME ENCODER
PCB
LINE COMP SWITCH

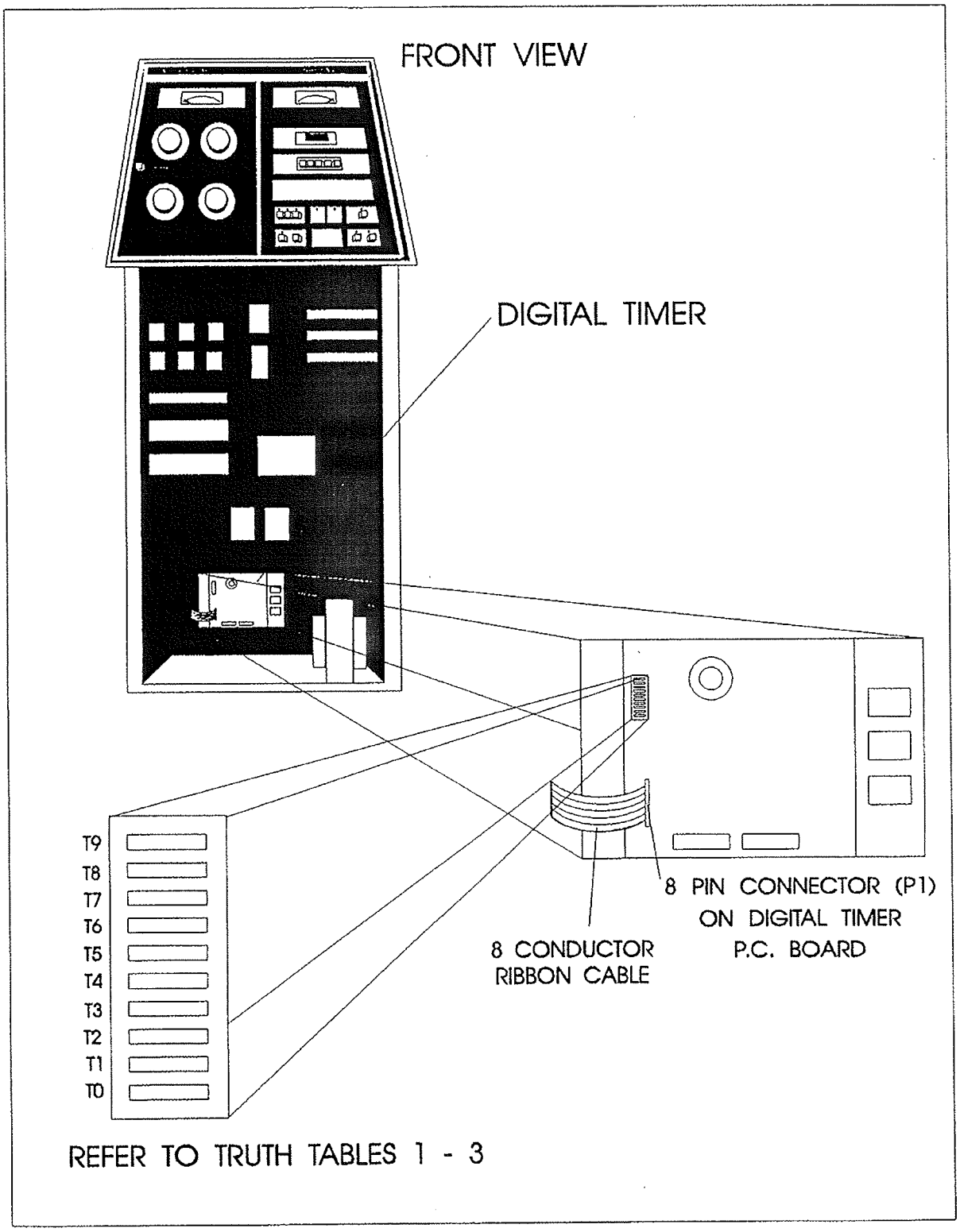
FRONT VIEW
DIGITAL TIMER
T9
T8
T7
T6
T5
T4
T3
T2
T1
T0
8 PIN CONNECTOR (P1)
ON DIGITAL TIMER
P.C. BOARD
8 CONDUCTOR
RIBBON CABLE
REFER TO TRUTH TABLES 1 - 3

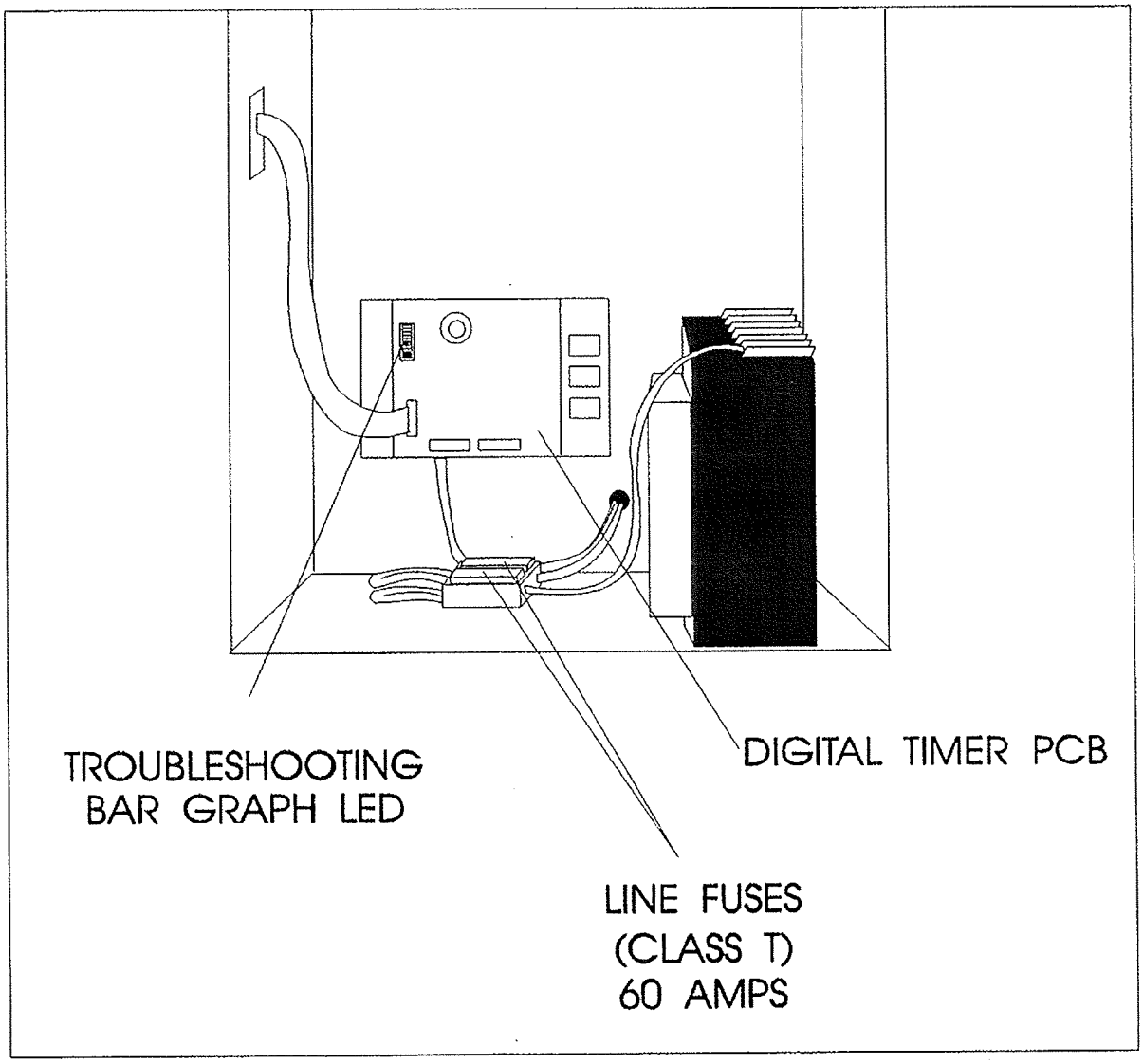
TROUBLESHOOTING
BAR GRAPH LED
DIGITAL TIMER PCB
LINE FUSES
(CLASS T)
60 AMPS

I. DIGITAL TIMER FUNCTION OVERVIEW

A train of line-synced 2 millisecond gate drive pulses is continuously produced and steered toward the exposure release logic gates of only one of the two SCRs. These repeating pulses are blocked from the gate drivers by the exposure release logic gates until an exposure is requested and all conditions for safe operation is established.

The SCR chosen to receive the gate drive pulses is determined by the set-reset of a core memory circuit.

These gate five pulses are synchronized to begin as the High Tension primary voltage applied to the SCRs starts to swing through the zero-voltage point. When all conditions are established for an exposure,a 4 KHz oscillator will be gated on and the synchronizing pulses will then release a 2 millisecond burst of these gate drive to the SCR gate .7ms prior to the voltage zero point to guarantee that the firing of the SCR will occur as early in the beginning of the waveform as is possible.

When and SCR fires, the resultant High Tension primary pulse is detected by a signal transformer T4 located in the lower section of the timer. This pulse is conditioned and routed to the pulse counter IC. This pulse also flips the core memory latch to allow firing of the alternate SCR at the next zero-voltage crossing.

The pulse counted are compared to the number of pulses requested by the position of the time selector switch. If the count does not yet match the request, the second SCR fires and the resultant pulse flips the core memory again and this pulse is also counted.

A group of 5 LEDs on the timer PCB shows, in a binary format, the count of the pulses produced. Only the five least significant bits are shown which allows a display of the direct count of up to the first 31 pulses. By using the truth table provided in the instructions, an indication of the pulse count from 32 through 720 pulses is also provided.

When the pulse count matches the request, the oscillator is clamped off and the exposure release logic gates inhibit further firing of the SCRs.

Following an exposure, the counter does not reset until the EXP switch is released. The pulse count received will be retained and visually indicated by the row of 5 LED indicators on the timer PCB to allow confirmation of the number of pulses received.

Upon release of the EXP switch the counter is instantly reset.

NOTE

A beep tone will indicate production of x-rays. When the beep tone stops, production of x-rays has terminated and you can release the exposure button. An x-ray exposure can be terminated at any time by releasing the exposure button.

J. DIGITAL TIMER PHASING

All Digital Timers are factory phased, however, it is wise to check it out in case your control has been altered by past servicing actions.

During check-out of the timer, set the generator to a mid-kVp value at 150 mA value. Set the time selection to .100 sec.

Attempt an exposure in the usual manner.

Do not attempt High kVp or long time duration exposures at this point, in order to avoid possible tube damage.

If the timer beeper makes a continuous beep AND DOES NOT PRODUCE A mA READING ON THE CONTROL METER, this is an indication that the wires attached to the plugable terminal strip P2-7 and P2-8, REQUIRE EXCHANGING. This misphasing would result in always attempting to gate the SCRs when their anodes are negative; they will not gate on with this condition. After exchanging the wire in P2-7 and P2-8, the timer now should produce and exposure.

If the exposure now PRODUCES mA and, THE ACTUAL EXPOSURE TIME LASTS CONSIDERABLY LONGER THAN THE TIME SETTING, of if the observed counts displayed on the LED BAR APPEARS ERRATIC, this is an indication that the wires located on the plugable terminal strip P3-1 and P3-2 REQUIRE EXCHANGING. This misphasing would always acknowledge that the SCR #2 fired when SCR #1 actually fired. The current-produced pulses are ignored in this event and the count, if any, is residual noise.

After exchanging the wires in P3-1 and P3-2, the timer should now be ready to use and, unless the timer contains a defect, is now ready to use safety and reliably.

⚠ CAUTION ⚠

In order to avoid thermal damage to the x-ray tube perform the following warm up procedure, if the system has not been energized for approximately eight hours or the unit has been off for approximately two hours and the technique to be used requires high mA, high kVp or long times.

Shot 1:	70 kVp	150 mA	1/10 Second
Shot 2:	80 kVp	150 mA	1/10 Second
Shot 3:	90 kVp	150 mA	1/10 Second
Shot 4:	100 kVp	150 mA	1/10 Second

K. DIGITAL TIMER ACCURACY CHECK-OUT INSTRUCTIONS

ALL DIGITAL TIMERS ARE THOROUGHLY FACTORY TESTED, BUT SHOULD BE RETESTED UPON INSTALLATION TO VERIFY THAT THERE HAS BEEN NO DAMAGE INCURRED DURING SHIPMENT.

TEST PROCEDURE

1. Set the timer to each of the time stations, observe the pattern of the lower 5 LED indicator on the bar-graph.
2. Use TRUTH TABLE #1 and note the LEDs that are ON.
3. Rotate the time selector to each of the 23 time stations. Put a check mark by each time station as it is tested.

REJECTION

1. IF THE PATTERN OF LEDs DO NOT MATCH TRUTH TABLE #1, CEASE TESTING.
2. Identify, correct the defect and repeat entire test.

INSTRUMENT SETUP AND ACCURACY TEST

1. With control and transformer pretested and connected for operation, monitor the output with a Dynalyzer High Voltage and Digital Display. Connect an oscilloscope to the High Voltage Unit to monitor pulses of the kVp.
2. Set the timer to "0.41" time station and check for EXACTLY 5 PULSES displayed on the scope during low power x-ray exposures (50 mA, 50 kVp)
3. Adjust the Dynalyzer kV trigger level to obtain a reading of 41.00 to 41.66 ms.
4. DO NOT ALTER THE DYNALYZER TRIGGER SETTING UNTIL AFTER ALL TIME STATIONS ARE TESTED AS OUTLINED BELOW.
5. Use TRUTH TABLE #2 for the first 12 time stations and TRUTH TABLE #3 for the 13th through 23rd. Note the millisecond readings during exposures and the pattern on the upper 5 LEDs.

   EXP SWITCH MUST REMAIN DOWN AFTER EXPOSURES TO RETAIN LEDs PATTERN.
6. Rotate the time selector to each of the 23 time stations, make an exposure, keep the EXP SWITCH down and put a check mark by each time station as it is tested.

REJECTION

1. IF THE TIME INDICATIONS OR THE LED PATTERN IS NOT AS SHOWN ON TRUTH TABLE #2 AND #3, CEASE TESTING.
2. Identify, and correct the defect and repeat the entire test.

NOTE

FOR CHECK-OUT PROCEDURE REFER TO PAGES 2-24.

DIGITAL TIMER ACCURACY CHECK-OUT
T0 IS THE BOTTOM LED, T1 THE 2nd UP, T2 THE 3rd UP, T3 THE 4th UP AND T4 IS THE 5th UP FROM THE BOTTOM.

LED POSITION		5th	UP- 4th	UP-3rd	UP-2nd	UP BOTTOM	LED
PCB SYMBOL		"MSB"				"LSD"	
BINARY WEIGHTING		T4	T3	T2	T1	T0	
P1 UNPLUGGED		(OFF)	(OFF)	(OFF)	(OFF)	(OFF)	
FROM TIMER PCB		0	0	0	0	0	= ZERO TIME
POS =	SEC						REQUESTED
1 =	.008	0	0	0	0	1	= 1 PULSE
2 =	.016	0	0	0	1	0	= 2 PULSES
3 =	.024	0	0	0	1	1	= 3 PULSES
4 =	.033	0	0	1	0	0	= 4 PULSES
5 =	.041	0	0	1	0	1	= 5 PULSES
6 =	.050	0	0	1	1	0	= 6 PULSES
7 =	.067	0	0	1	1	1	= 8 PULSES
8 =	.083	0	1	0	0	0	= 10 PULSES
9 =	.100	0	1	0	0	1	= 12 PULSES
10 =	.150	0	1	0	1	1	= 18 PULSES
11 =	.200	0	1	1	0	1	= 24 PULSES
12 =	.250	0	1	1	1	0	= 30 PULSES
13 =	.300	0	1	1	1	1	= 36 PULSES
14 =	.400	1	0	0	0	1	= 48 PULSES
15 =	.500	1	0	0	1	0	= 60 PULSES
16 =	.750	1	0	1	0	0	= 90 PULSES
17 =	1.00	1	0	1	1	0	= 120 PULSES
18 =	1.25	1	0	1	1	1	= 150 PULSES
19 =	1.50	1	1	0	0	1	= 180 PULSES
20 =	2.00	1	1	0	1	0	= 240 PULSES
21 =	2.50	1	1	0	1	1	= 300 PULSES
22 =	3.00	1	1	1	0	0	= 360 PULSES
23 =	6.00	1	1	1	1	1	= 720 PULSES

TRUTH TABLE #1

DIGITAL TIMER ACCURACY CHECK-OUT

NOTE

THIS TRUTH TABLE COVERS ONLY THE 1st (1 PULSE) THROUGH 12th (30 PULSES) TIME SWITCH POSITIONS.

THE BAR-GRAPH DISPLAYS ONLY THE FIRST 5 SIGNIFICANT BITS OF THE COUNT.

T5 IS THE 6th FROM THE BOTTOM, T6 THE 7th FROM THE BOTTOM, T7 THE 8th, T8 IS THE 9th AND T9 IS THE UPPER LED.

	LED POS.		UP-9th	UP-8th	UP-7th	UP-6th	LED UP	
	PCB SYMBOL		"MSB"				"LSD"	
	BINARY WEIGHTING		T9	T8	T7	T6	T5	
TIME Sw POS =		SEC						COUNTED
ACCEPTANCE +/-4 Ms ON DIGITAL DISPLAY..... +/- ZERO LEDs	1 =	.008	0	0	0	0	1	= 1 PULSE
	2 =	.016	0	0	0	1	0	= 2 PULSES
	3 =	.024	0	0	0	1	1	= 3 PULSES
	4 =	.033	0	0	1	0	0	= 4 PULSES
	5 =	.041	0	0	1	0	1	= 5 PULSES
	6 =	.050	0	0	1	1	0	= 6 PULSES
	7 =	.067	0	1	0	0	0	= 8 PULSES
	8 =	.083	0	1	0	1	0	=10 PULSES
	9 =	.100	0	1	1	0	0	= 12 PULSES
ACCEPTANCE +/- 8 MS ON DIGITAL DISPLAY +/- 1 "LSB" (BIT 1, LED #6)	10 =	.150	1	0	0	1	0	= 18 PULSES
	11 =	.200	1	1	0	0	0	= 24 PULSES
	12 =	.250	1	1	1	1	0	= 30 PULSES

ANY BINARY COUNT OTHER THAN THE ABOVE IS A FAULT IN THE TIMER.
THE BINARY INDICATIONS FOR THE OTHER TIME SWITCH POSITIONS ARE NOT INCLUDED ON THIS TRUTH TABLE.

TRUTH TABLE #2

DIGITAL TIMER ACCURACY CHECK-OUT

NOTE

THIS TRUTH TABLE COVERS ONLY THE 13th 936 PULSES) THROUGH THE 23rd (720 PULSES) TIME SWITCH POSITIONS.

THE BAR-GRAPH DISPLAYS ONLY THE FIRST 5 SIGNIFICANT BITS OF THE COUNT.
T5 IS THE 6th FROM THE BOTTOM, T6 THE 7th FROM THE BOTTOM, T7 THE 8th, T8 IS THE 9th AND T9 IS THE UPPER LED.

	LED POS.		UP-9th	UP-8th	UP-7th	UP-6th	LED UP	
	PCB SYMBOL		"MSB"				"LSD"	
	BINARY WEIGHTING		T9	T8	T7	T6	T5	
TIME Sw POS =		SEC						COUNTED
ACCEPTANCE +/- 8 MS ON DIGITAL DISPLAY	13 =	.300	0	0	1	0	0	=36 PULSES
	14 =	.400	1	0	0	0	0	=48 PULSES
	15 =	.500	1	1	1	0	0	=60 PULSES
	16 =	.750	1	1	0	1	0	=90 PULSES
+/-1 "LSB" (BIT 1, LED #6)	17 =	1.00	1	1	0	0	0	=120 PULSES
	18 =	1.25	1	0	1	1	0	=150 PULSES
	19 =	1.50	1	0	1	0	0	=180 PULSES
	20 =	2.00	1	0	0	0	0	=240 PULSES
	21 =	2.50	0	1	1	0	0	=300 PULSES
	22 =	3.00	0	1	0	0	0	=360 PULSES
	23 =	6.00	1	0	0	0	0	=720 PULSES

ANY BINARY COUNT OTHER THAN THE ABOVE IS A FAULT IN THE TIMER.
THE BINARY INDICATIONS FOR THE OTHER TIME SWITCH POSITIONS ARE NOT INCLUDED ON THIS TRUTH TABLE.

TRUTH TABLE #3

L. FINAL COMPLIANCE TESTS

It is necessary for the assembler to perform tests on the newly-assembled x-ray system prior to release to the user. These tests must assure compliance with the applicable requirements of the FDA performance standard at the time of installation.

Perform these tests in accordance with NEMA publication #XR8-1979, Test Methods for Diagnostic X-Ray machines for Use During Initial Installation. It is necessary that the assembler document these tests to demonstrate at a later date that all tests were performed and that the x-ray system was left in full compliance with the standard. The test results obtained must verify that the following system specifications are met or the system must be removed from service until corrective action is completed.

SYSTEM SPECIFICATIONS

BEAM QUALITY

The half-value layer of the useful beam shall not be less than 3.5 mm of aluminum.

REPRODUCIBILITY AND LINEARITY

When the x-ray unit is operated on an adequate power supply (see section II A) : (1) the estimated coefficient of variation of radiation exposure shall not be greater than .048 for any specific combination of technique factors, and (2) the average ratios of exposure to the indicated tube current exposure time product (mAs) obtained at any two consecutive tube current settings shall not differ by more than .095 times their sum, or

$$\frac{\overline{X_1} - \overline{X_2}}{\overline{X_1} + \overline{X_2}} \leq 0.095$$

where $\overline{X_1}$ and $\overline{X_2}$ are the average mR/mAs value obtained at each of two consecutive tube current settings.

PEAK TUBE POTENTIAL

The maximum deviation of the peak tube potential from its pre-indicated value during an exposure, when the equipment is connected to an adequate power supply (see section II A) shall not exceed +/- 19% of full scale value within the range of 40 - 125 kVp.

TUBE CURRENT

The maximum deviation of the tube current from its pre-indicated value during an exposure, when the equipment is connected to an adequate power supply (see section II A) shall not exceed +/- 9% of selected tube current within the range of 50 - 125 kVp, and +/- 19% of selected tube current within the range of 40 - 50 kVp.

EXPOSURE TIME

The maximum deviation of the exposure time from its pre-indicated value during an exposure, when the equipment is connected to an adequate power supply (see section II A) shall not exceed +/- 0 pulses within the range of 1-120 - 6 seconds.

M. CERTIFICATION OF COMPATIBILITY

Universal Inc. certifies that its certified x-ray controls and high voltage generators are compatible with all certified x-ray tubes concerning compliance with 21CFR, Chapter I, Subchapter J, only if the ratings of the control, generator and tube are strictly observed and the control is calibrated within the applicable published limits.

Universal Inc. certified controls and generators, when combined with other certified components, will not affect the compliance of these components when these components are installed, connected and adjusted in accordance with the applicable manufacturer's instructions and specifications.

N. COMPLIANCE WITH U.L. REQUIREMENT FOR STABILITY

Underwriters Laboratories, Inc. Standard for Safety of X-Ray Equipment, UL 187, Section 29, requires that this x-ray control cabinet be safety secured to the floor to prevent accidental tipping which could result in injury.

Use the two (2) slotted holes (.375 x .875 inches) provided in the base of the cabinet to safely secure the unit to the floor with appropriate type of fasteners which must be determined by the installer depending upon the type of floor encountered.

APPENDIX A: SCHEMATICS AND CIRCUIT DIAGRAMS

1. 3550 High Tension Transformer Schematic
2. 3487 Control Schematic
3. Timer Encoder Printed Circuit Board Schematic
4. Digital Timer Printed Circuit Board Schematic
5. Digital Timer Module Schematic

SCHEMATIC NO. 5500-2115

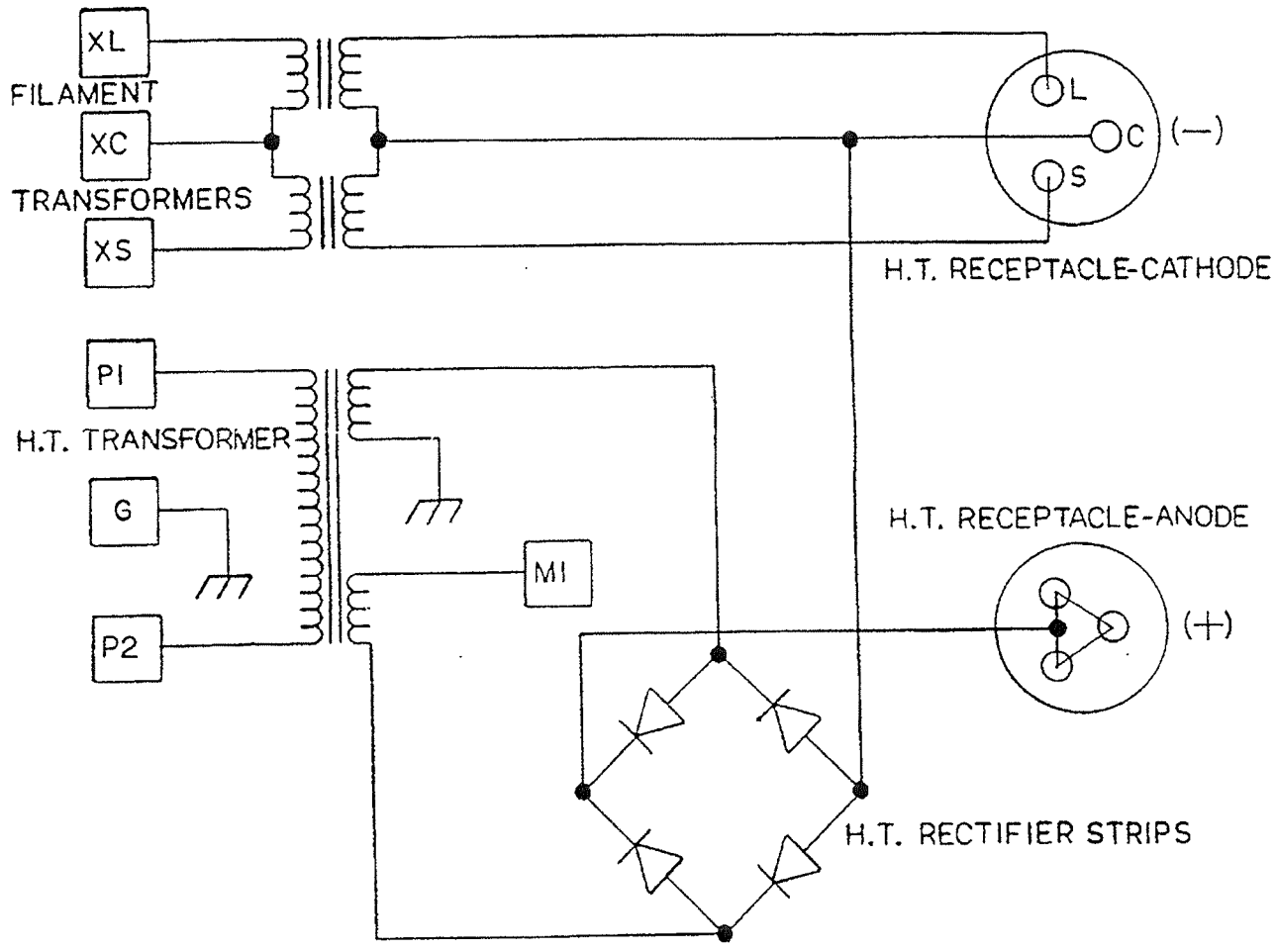

3550 H.T. TRANSFORMER