SERVICE MANUAL

Panoramic Radiograph

Bel-Cypher N

SAFETY INSTRUCTION TO SERVICE PERSONNEL

- Be sure to read this “Service Manual” before starting repair work.
- Be sure to keep this “Service Manual” handy while performing repair work.

TAKARA BELMONT CORPORATION

Before Starting Repair Work

Please be sure to read this “Service Manual” before starting repair work and fully understand the contents. Some repair works involve risks in adjustment, confirmation, etc. So be very careful about the safety when performing such works. The repair works shall be performed by a qualified personnel or a person who completed the training specialized in repair at our company.

CONTENTS

01. INTRODUCTION 01-1/1

02. WARNINGS 02-1/6

03. PREPARATION FOR REPAIR WORK 03-1/1

04. SPECIFICATION 04-1/2

05. EQUIPMENT COMPONENTS 05-1/1

06. TROUBLESHOOTING 06-1/8

07. RESPONSE TO ERROR MESSAGE 07-1/2

08. PRINTED CIRCUIT BOARD LAYOUT DRAWING 08-1/5

09. PART LIST 09-1/12

10. MAINTENANCE CHECK 10-1/2

11. CONTACT INFORMATION 11-1/1

11. REVISED RECORD OF THIS MANUAL 12-1/1

APPENDIX : ELECTRIC BLOCK DIAGRAM

01. INTRODUCTION

1. Before starting repair work, be sure to read Operation Manual of the equipment.

2. The operating procedure of panoramic radiography forms the basis of all operations. So become fully familiar with its procedure before taking other radiograph.

3. Be sure to observe the warnings and prohibited matters in the body of this Service Manual strictly.

4. Read this Service Manual from the beginning in the order it is written. If you read from the middle of this manual and do the repair work, it may cause an accident, breakage of this equipment etc. due to an incorrect repair work.

5. If you find any unclear point during a repair work, read this Service Manual again to check about it and restart the repair work.

6. Exemption from Responsibility
   Be sure to observe the contents of Service Manual. The accident and breakage of this equipment due to an incorrect repair work are out of the scope of our responsibilities.

7. Warranty Period for Equipment
   The warranty period is three years from the date of purchase. The charge-free warranty will be applied only to the cases where breakage, failure, etc. of this equipment occurred through normal use.

8. Available Period for Repair Parts and Service Parts
   The repair parts and service parts are available for 10 years after discontinuing this product.

10. The disinstallation and disposal of equipment are within the scope of responsibilities of the customer. In the case to disinstall the equipment, consult with the dealer you purchased from or with us.

02. WARNINGS

⚠ WARNING

When you perform a repair work, read this "Service Manual" and follow its instructions.
If repaired wrongly, it may cause a breakage of the equipment or an accident.
Especially, be sure to comply with the instructions following the signal words DANGER, WARNING and CAUTION.

NOTE

In this "Service Manual", the meanings of signal words are defined as follows:

⚠ DANGER

Indicates a direct risk that is predicted to result in death or serious injury, serious property damage such as total loss of equipment and fire if you do not avoid it.

⚠ WARNING

Indicates an indirect risk that is predicted to result in death or serious injury, serious property damage such as total loss of equipment and fire if you do not avoid it.

⚠ CAUTION

Indicates a risk that has a potential to result in minor injury or moderate injury, partial damage of equipment and extinction of computer data if you do not avoid it.

⚠ NOTE

Indicates helpful information in using this equipment.

⚠ DANGER

Liquids on this equipment will cause electric shock accident or equipment damage.
This equipment is electric equipment. Keep liquids away from this equipment.

⚠ DANGER

Shock hazard. This equipment is electric equipment and has some high-voltage portions inside.
Turn off the power of equipment and unplug power cable from electrical outlet before opening cover of equipment for repair work.

⚠ DANGER

Some repair works involve risks. Only qualified or trained persons may do repair works.

⚠ DANGER

Some repair works involve risks. Service personnel must give instructions to outsiders to stay away from repair work area.

⚠ WARNING

Do not make alterations to medical electronics equipment!

Alterations by user are prohibited.
Also, relevant pharmaceutical affairs law imposes following regulations on manufacturers.
That is, medical equipments need item-specific approval for manufacture, and “application for partial modification approval” is required when making functional changes in medical equipments.
So unauthorized alterations are prohibited.

⚠ WARNING

Radiation Protection in Dentistry

Comply with the contents of each clause regarding protection against radiation exposure prescribed in relevant medical regulations when installing and using dental X-ray equipments.

⚠ WARNING

This equipment for radiograph can cause hazard to service personnel if safe exposure conditions and how to use are not complied with.

⚠ WARNING

Be sure to sterilize equipment portions to be touched by patient or operator before starting repair work. After completing the repair work, sterilize equipment portions touched by service personnel.

⚠ WARNING

While repairing, do not place anything that can be an obstacle within the range of equipment.

⚠ WARNING

To avoid damages to equipment, measuring instruments, etc. and electric shock, service personnel must not remove covers of equipment except when necessary.

⚠ WARNING

To avoid damages to equipment, measuring instruments, etc. and electric shock, turn off power of equipment and take extra care not to short-circuit with other circuit when connecting lead wire of measuring instrument to a circuit within the equipment during repair work.

⚠ WARNING

To avoid damages to equipment, measuring instruments, etc. and electric shock, be sure to turn off power of equipment and use the parts specified by us when replacing machine parts and electric parts of the equipment.

⚠ WARNING

To avoid X-ray exposure due to carelessness, be sure to install lead plate for X-ray protection on X-radiation aperture of X-ray generator when radiating X-rays during repair work.

⚠ WARNING

Be sure to use positioning attachment specified for each exposure mode when positioning patient.

⚠ WARNING

Be sure to make patient and nursing attendant to wear X-ray protective clothing. (Nursing attendant in this sentence means a person allowed by doctor.)

⚠ WARNING

Be sure to operate X-ray exposure switch from outside of X-ray room.

⚠ WARNING

Operator must instruct patient not to move while X-raying.

⚠ WARNING

Watch patient, nursing attendant and equipment constantly while X-raying, and release X-ray exposure switch immediately if you find something abnormal.

⚠ WARNING

Contact the dealer you purchased from when scraping this equipment.

⚠ WARNING

After completing repair work, be sure to turn OFF power for safety.

⚠ CAUTION

When X-raying patient after completing repair work, take extra care for patient safety when positioning patient.

⚠ CAUTION

Damage etc. inside X-ray generator cannot be repaired on site. Depending on service personnel's judgment, the equipment will be returned to factory for repair or replacement.

⚠ WARNING

Responsibility for managing the use and maintenance of medical equipments lies with the user (hospital or clinic). This equipment must be used by doctor or qualified person only.
As repair or check inside equipment involves risks, contact the company you purchased from.

⚠ WARNING

When earthquake warning is issued, do not use this equipment.
After an earthquake, be sure to conduct maintenance check of the equipment and confirm no abnormality before use. Default of the check and/or confirmation can harm patient.

⚠ WARNING

Be sure to set up X-ray examination room and install the equipment body in the X-ray examination room.

⚠ WARNING

Do not place anything that can be an obstacle within the range of equipment movement.

⚠ WARNING

X-raying and approach to equipment must be done under the responsibility of user when repairer, patient, or nursing attendant allowed by doctor has a pacemaker etc.

⚠ WARNING

Be sure to use positioning attachment specified for each exposure mode when positioning patient.

⚠ WARNING

Be sure to make patient and nursing attendant to wear X-ray protective clothing.
(Nursing attendant in this sentence means a person allowed by doctor.)

⚠ WARNING

Operator must instruct patient not to move while X-raying.

⚠ WARNING

Be sure to sterilize and disinfect equipment portions touched by patient or operator after X-raying and at daily closing time.

⚠ WARNING

Contact our sales office near you when scraping this equipment.

⚠ WARNING

After using equipment, be sure to turn OFF power for safety.

⚠ WARNING

Keep everyone out of X-ray room except repairer when radiating X-rays for repair.

⚠ WARNING

To avoid equipment failure, do not rotate arm by hand.

⚠ WARNING

Keep patient unmoved until arm reset operation completed after X-raying.

⚠ CAUTION

Take extra care for patient safety when positioning patient.

⚠ CAUTION

Take extra care for patient safety when moving sliding unit up and down.

⚠ CAUTION

Do not look straight at positioning laser beam for your safety.　Also, give this caution to patient and nursing attendant.

03. PREPARATION FOR REPAIR WORK

1. Manuals

- This Service Manual on Bel-Cypher N
- Operation Manual on Bel-Cypher N

2. Measuring Equipments

1) Digital multi-meter
2) Oscilloscope
3) Lead wire for measurement
4) Insulation-resistance meter
5) X-ray detecting paper
6) Scale

3. Tools

1) Phillips-head screwdrivers (Large-size and small-size)
2) Flathead screwdriver (Small-size, insulated-type)
3) Box drivers (for M3, 4, 5, 6 screws)
4) Hexagonal wrench (a set of wrenches)
5) Nipper
6) Long-nose pliers
7) Electric soldering iron (insulated-type), solder
8) Taps for thread
9) Tap handle
10) Electric drill
11) Drill
12) Crimp tool (for crimping terminal)

4. Jigs for Adjustment

1) Test piece for Bel-Cypher N
2) Lead plate with thickness of 3mm or more (for X-ray protection)
3) Brass plate filter
4) Aluminum filter with thickness of 35mm
5) X-ray detecting paper

5. Repair and Service Parts

1) Depending the contents of repair, please prepare necessary boards, parts, wire harness, etc.

6. Other

1) Depending the contents of repair, please prepare screws, nuts, crimping terminals, grease, etc.
2) Alcohol for disinfection
3) Cloth
4) Clearing solvent

04. SPECIFICATION

Product Name	Panoramic Radiograph
Model Name	Bel-Cypher N
Power Voltage	120Vac 60Hz
Power Capacity	11A
High Voltage Generator	High-frequency inverter system (100kHz)
X-ray Tube Voltage	60kV~ 80kV (1kV step)
X-ray Tube Current	2 to 8mA (2mA step)
Exposure Control	Manual
X-ray Tube	D-052SB (made by Toshiba Corp.)
X-ray Tube Focus	0.5mm
Total Filtration	2.8mmAl (minimum)
Exposure Mode	Panoramic radiography: Adult / Child TMJ Lateral 4 sections Panoramic Bitewing: Adult / Child
Exposure Time	Panorama : 10 sec Panoramic Bitewing : 4.6 sec TMJLateral 4 sections : 2.5 sec (X4)
Magnification	Panorama : 1.2 to1.3 Panoramic Bitewing : 1.2 to 1.3 TMJ Lateral 4 sections : 1.2
Beam for Patient Positioning	3 beams
Dimensions (mm)	W: 906×D:1,126×H:2,200
Weight	Approx. 364lb(165kg)

System Requirements
Temperature : 5 ~ 35°C
Humidity : 30 ~ 85%
Pressure : 700 ~ 1060 hPa

Storage Environment
Temperature : –10 ~ 60°C
Humidity : 10 ~ 95%
Pressure : 700 ~ 1060 hPa

Transportation Environment
Temperature : –10 ~ 60°C
Humidity : 10 ~ 95%
Pressure : 700 ~ 1060 hPa

05. EQUIPMENT COMPONENTS

Block Diagrams

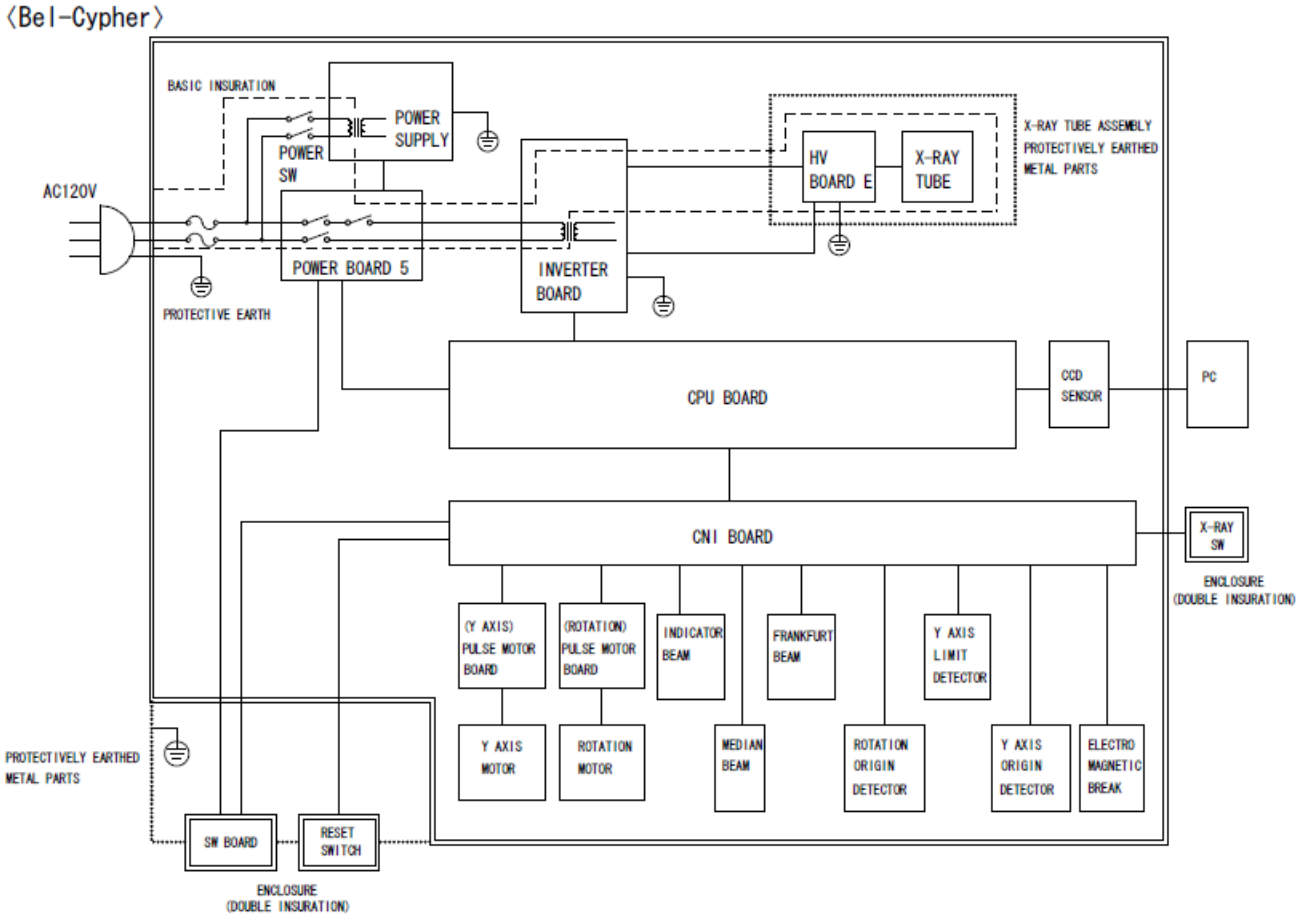

6. TROUBLESHOOTING

6.1 Unable to Turn On Power

Follow "No" if problem is not resolved

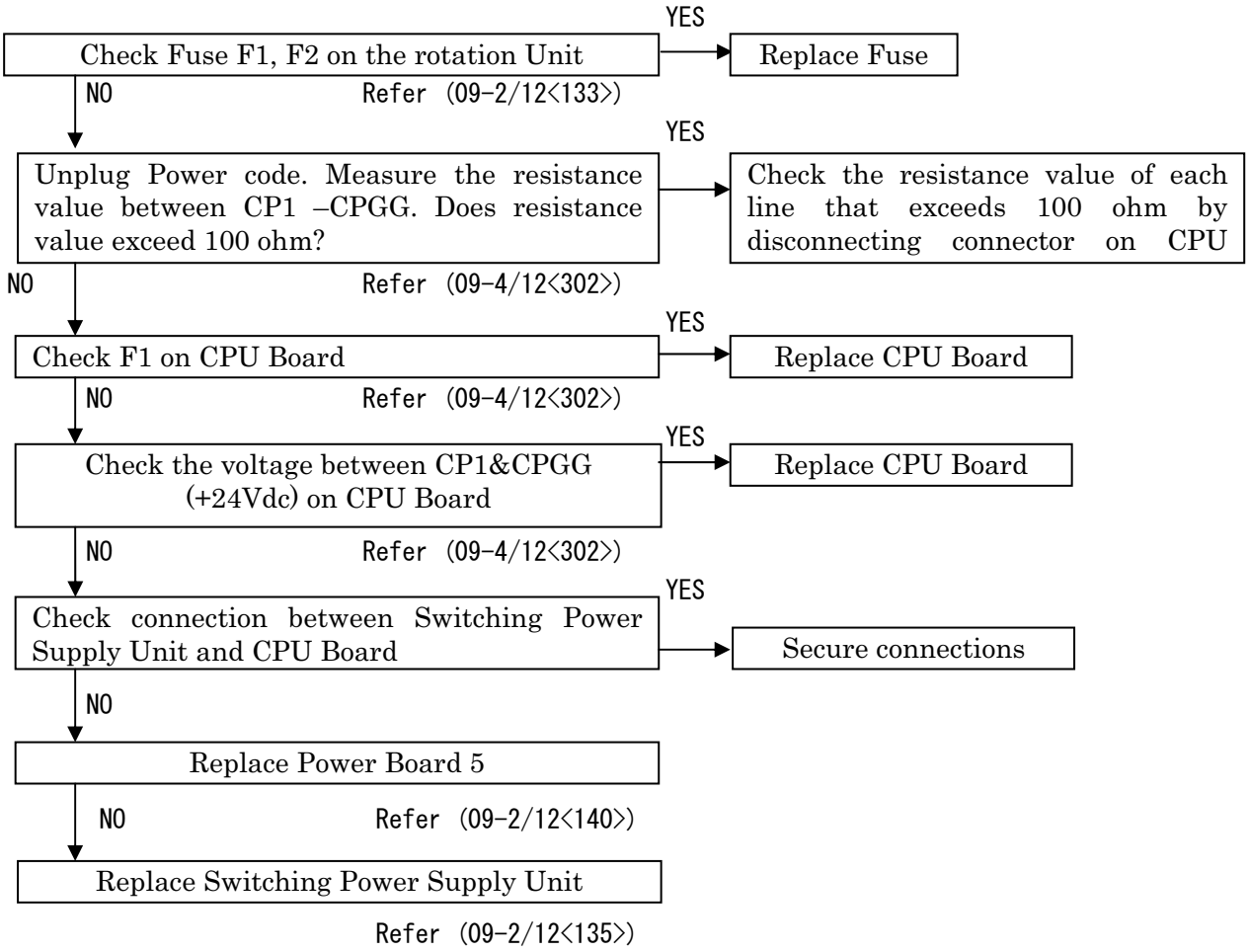

6.2. Arm doesn't rotate

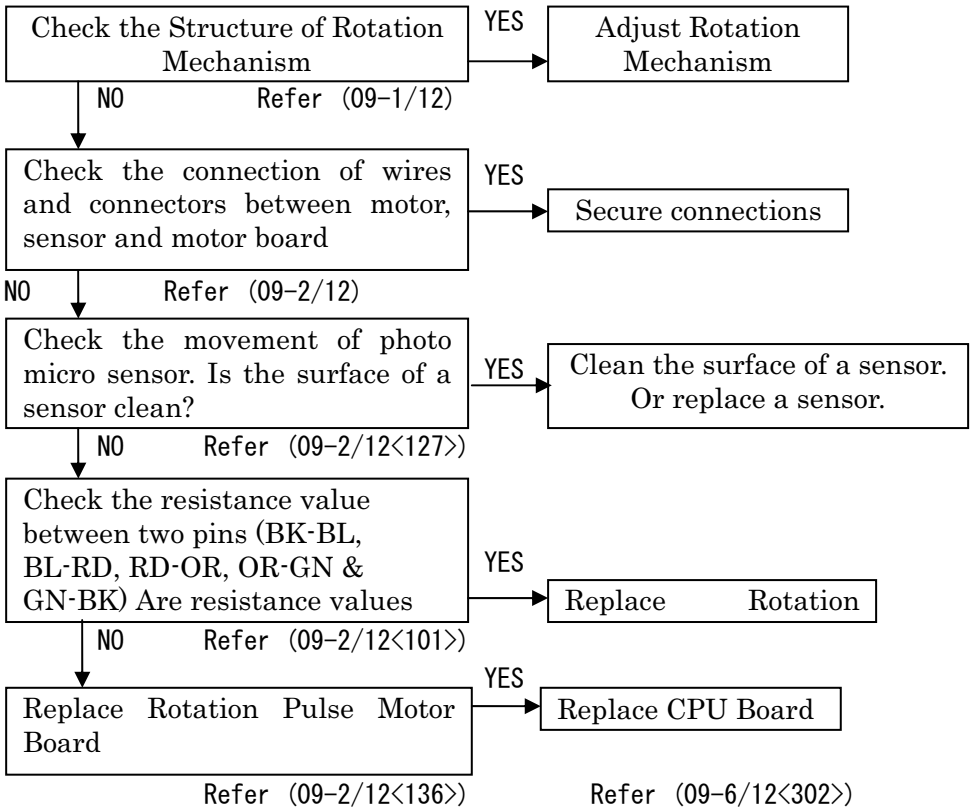

6.3. Y-axis Doesn't Move

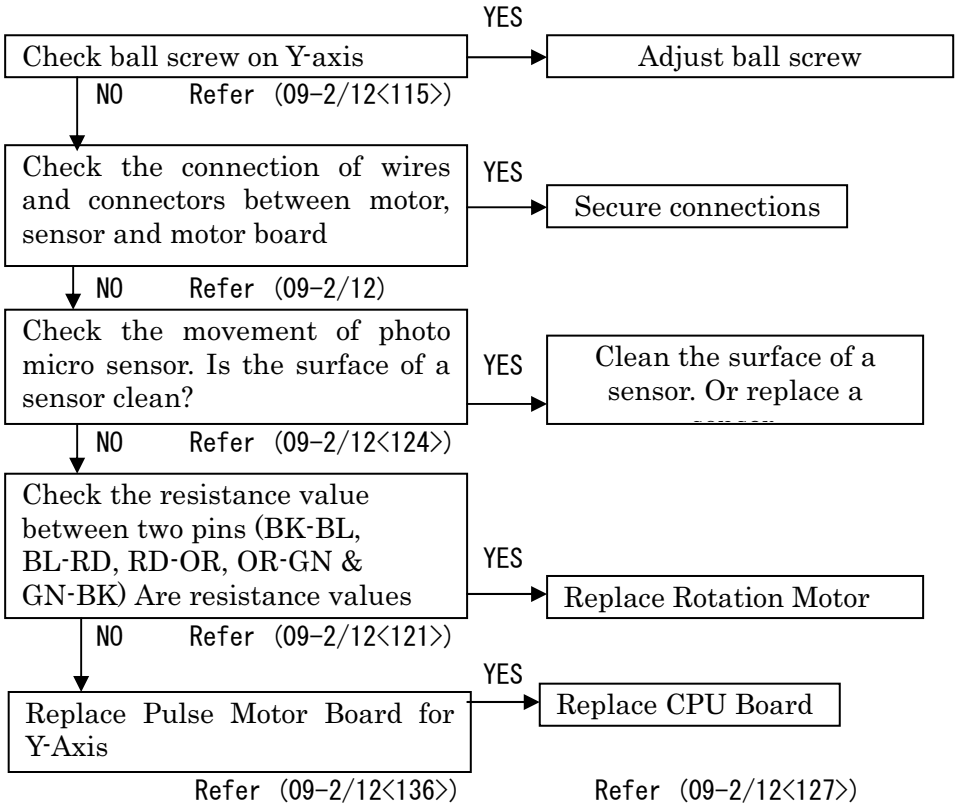

6.4. Tube Temperature Error, Unable to irradiate X-Ray

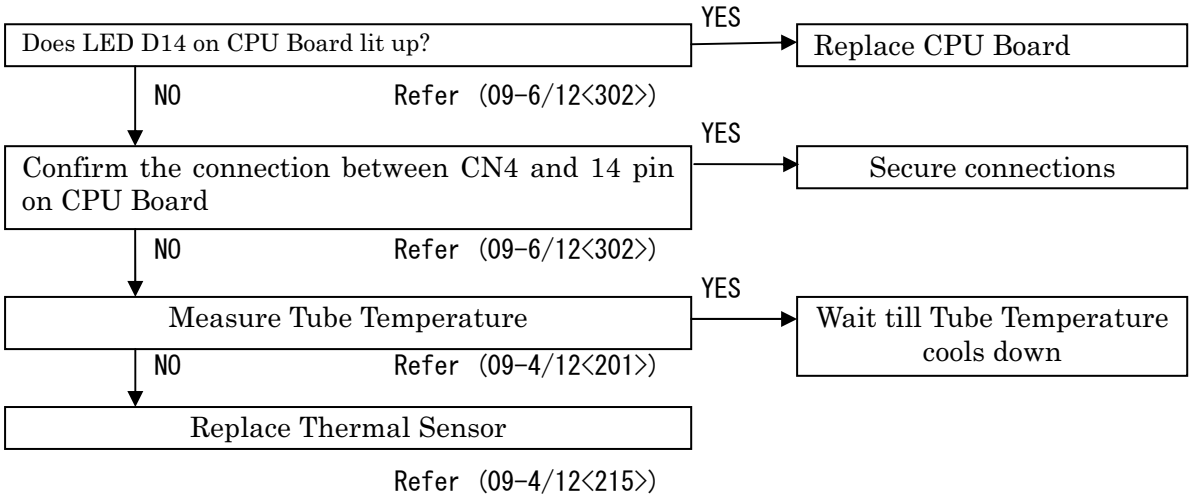

6.5. Positioning Beam Doesn't Lit

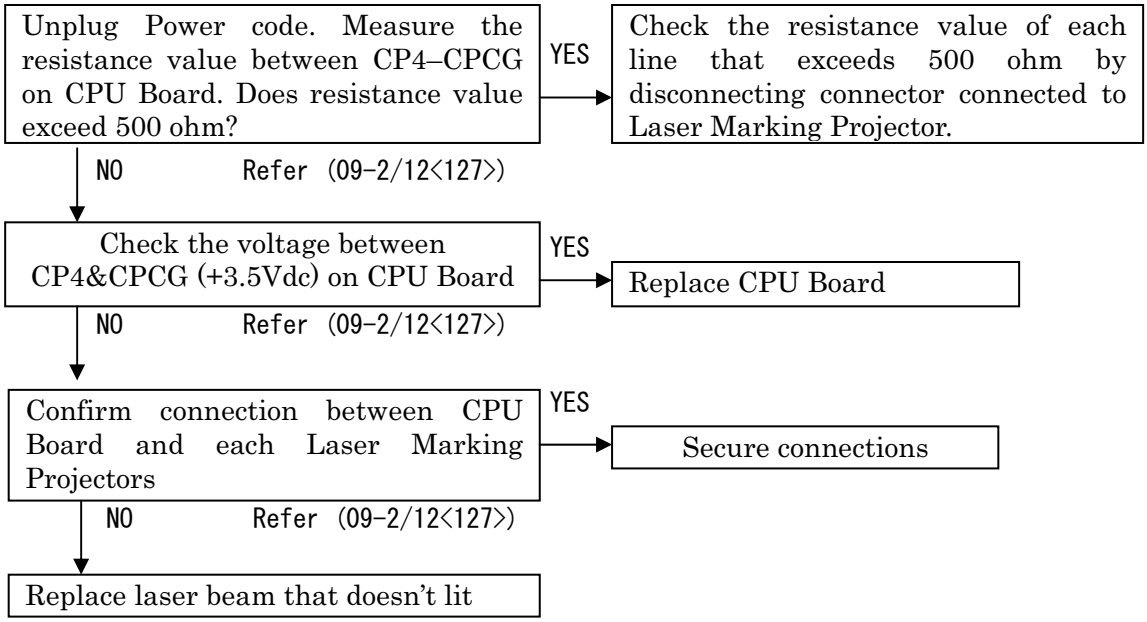

6.6. Unable to Irradiate X-rays

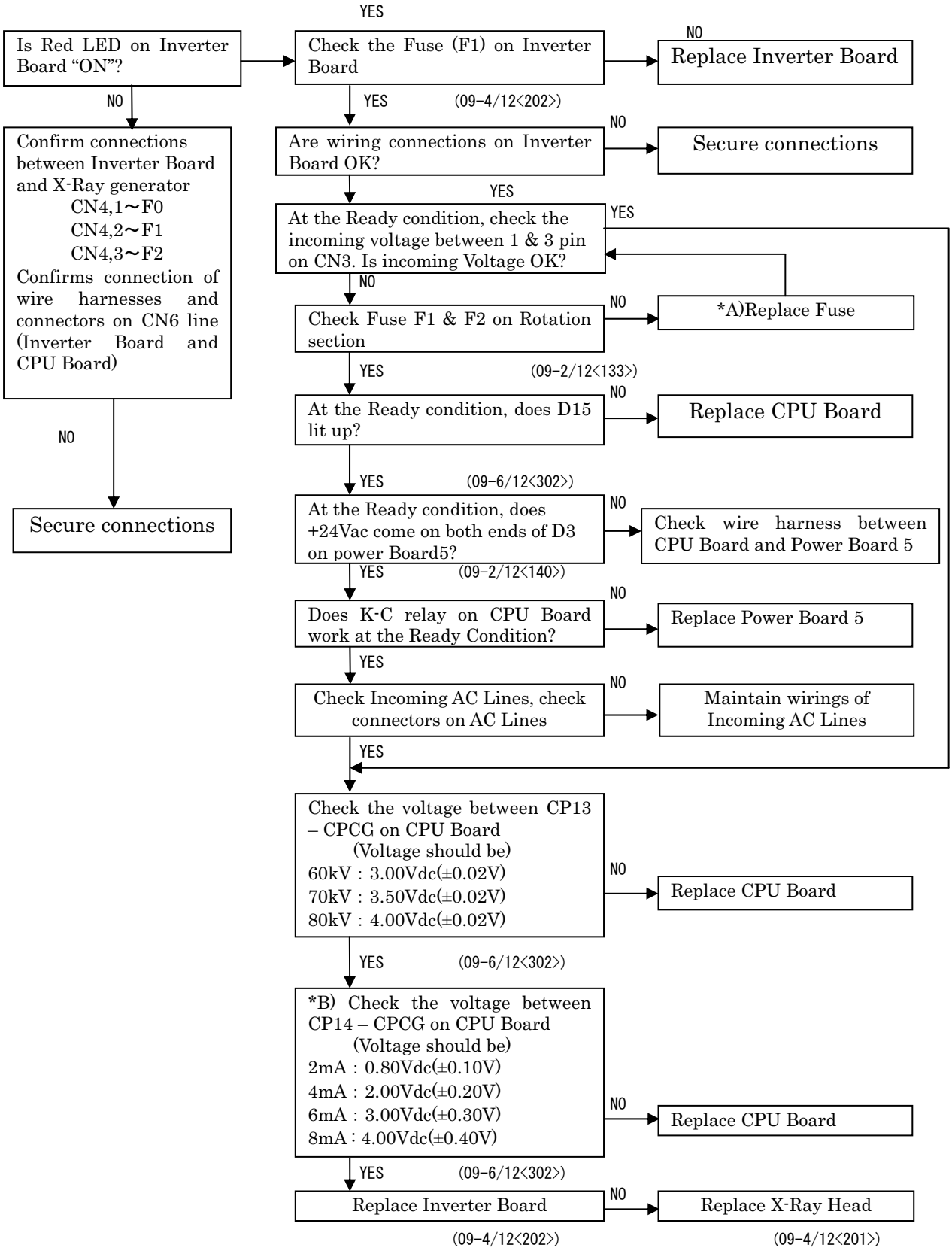

Remarks: *A) If fuse is replaced, always check *B).
When part is replaced, always confirms Tube current and feedback voltage of X-ray tube.

6.7. Exposure Switch doesn't work

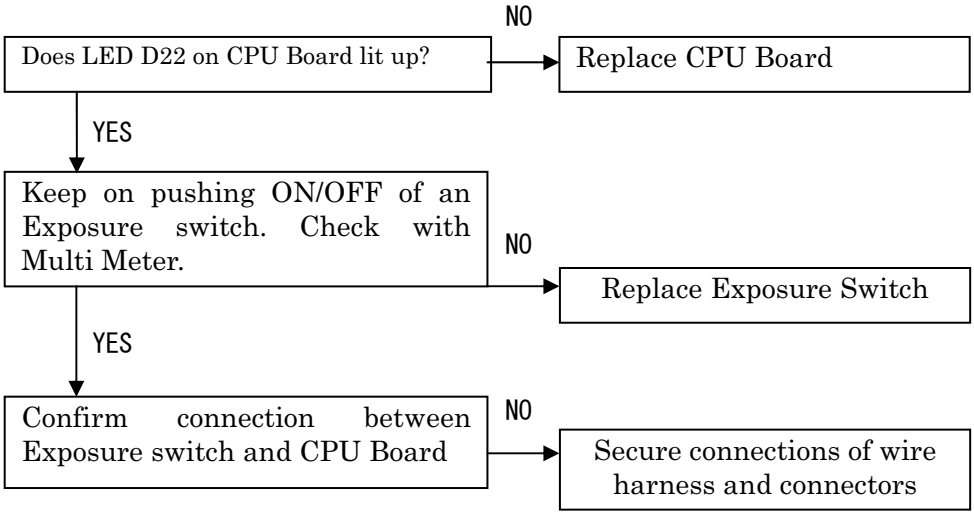

6.8. Communication Error between PC and Main CPU Board

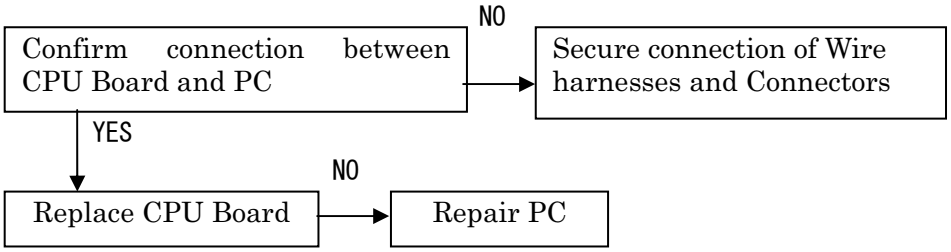

7. RESPONSE TO ERROR MESSAGE

When an error occurred in the equipment, the error message appears on the PC Screen. Take a measure to resolve the error.

1. Inverter Error

Follow the Trouble Shooting 6.6. Unable to Irradiate X-rays

2. Tube Temperature Error

Follow the Trouble Shooting 6.4. Tube Temperature Error, Unable to irradiate X-Ray

3. Y Axis Motor Error

Follow the Trouble Shooting. 6.3. Y-axis Doesn't Move

4. Rotation Motor Error

Follow the Trouble Shooting. 6.2. Arm doesn't rotate

5. X-Ray Switch Error

Follow the Trouble Shooting. 6.7 Exposure Switch doesn't work

6. Communication Error between PC and Main CPU

Follow the Trouble Shooting. 6.8. Communication Error between PC and Main CPU Board

＊ : Adjustment of Tube Current

Preheat level can be adjusted by RV1(Adjusting Resistor) on Inverter Board.

Adjusting Method:
1. Hit & Hold CTL+ALT+T to get into Test mode.
2. Click Rest on PC Screen
3. Set Exposure conditions as Panorama, Adult, 70kV & 4mA
4. Click Ready on PC Screen
5. Confirms wave shown on the oscilloscope.

Connect probes of storage oscilloscope to CP12 and CPCG on CPU Board.
Adjust RV1 on Inverter Board to change preheat level.
To rise preheat turn the knob to CW direction. If Inverter Error occurs, turn the knob to CCW direction.

6. When adjustment is completed, hit & hold CTL+ALT+T to get out from Test mode.

PH is not enough

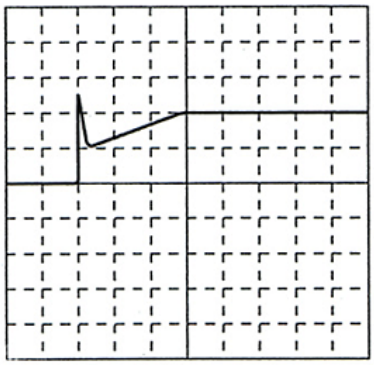

Too much PH

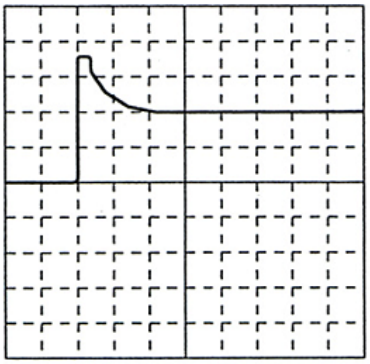

Adequate PH

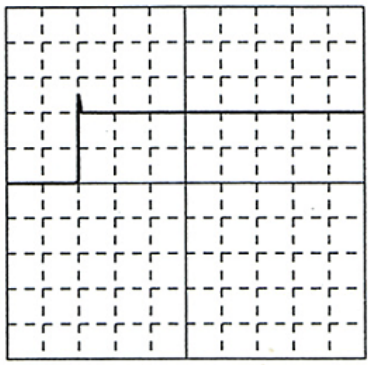

Scale 100ms/DIV at horizontal line, 1V/DIV at vertical line

7 After adjustment is done, confirm voltage is set within ranges.

Measuring Point	Tube Voltage	Tube Current	Measured Voltage (Vdc)
Between CP12 & CPGG on CPU Board	7 0	2	1.0±0.1Vdc
		4	2.0±0.1Vdc
		6	3.0±0.1Vdc
		8	4.0±0.1Vdc

Measuring Point	Tube Voltage	Tube Current	Measured Voltage (Vdc)
Between CP11 & CPGG on CPU Board	6 0	8	3.0±0.1Vdc
	7 0		3.5±0.1Vdc
	8 0		4.0±0.1Vdc

8. PRINTED CIRCUIT BOARD LAYOUT DRAWING

1. Overall View

The printed circuit board assemblies are housed in the portions shown in the drawing.

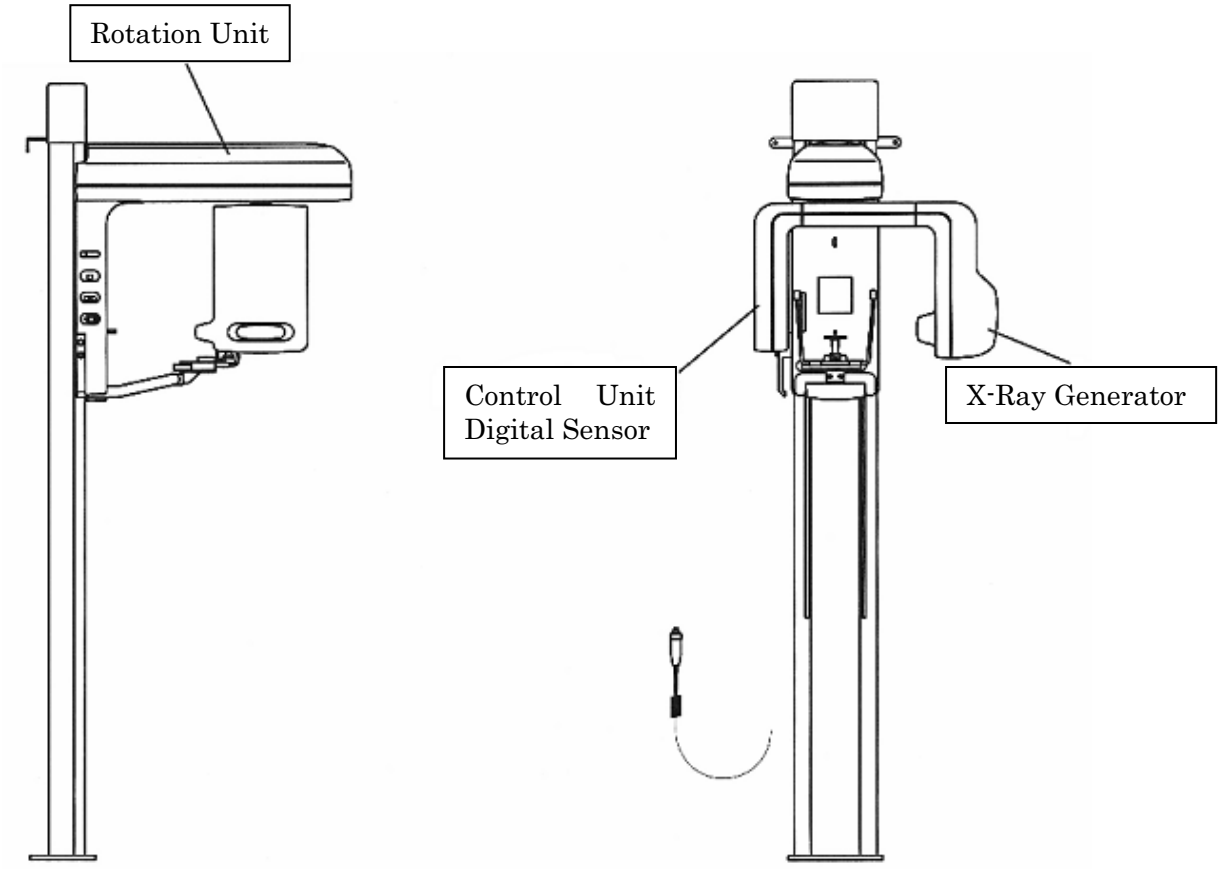

08

1.1 Rotation Unit

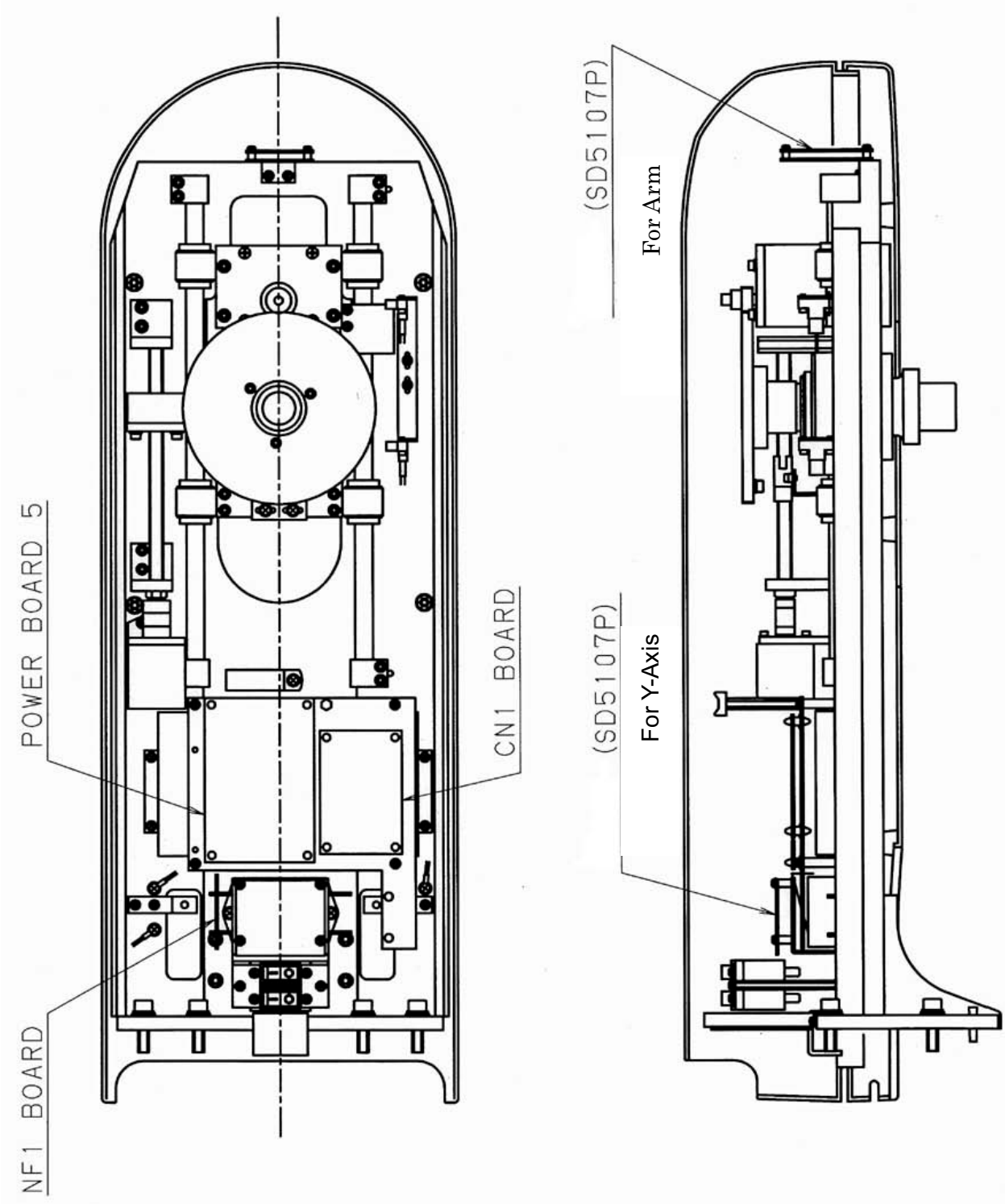

1.2 Arm Section (High Voltage Inverter side)

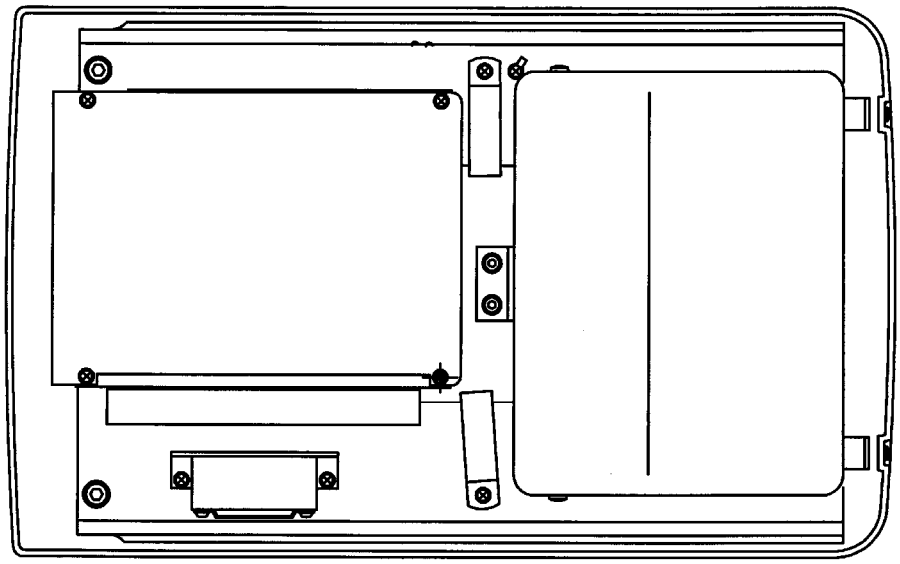

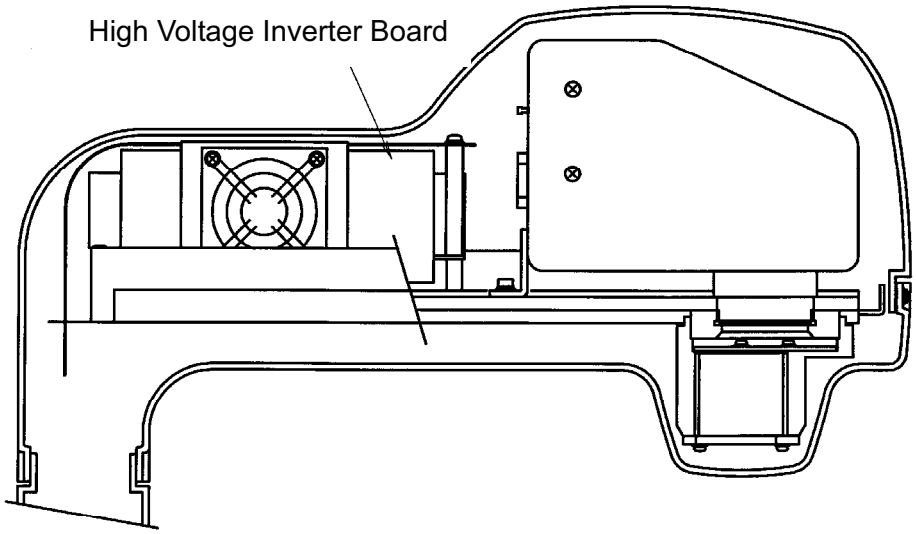

1.3 Arm Section (Digital Sensor side)

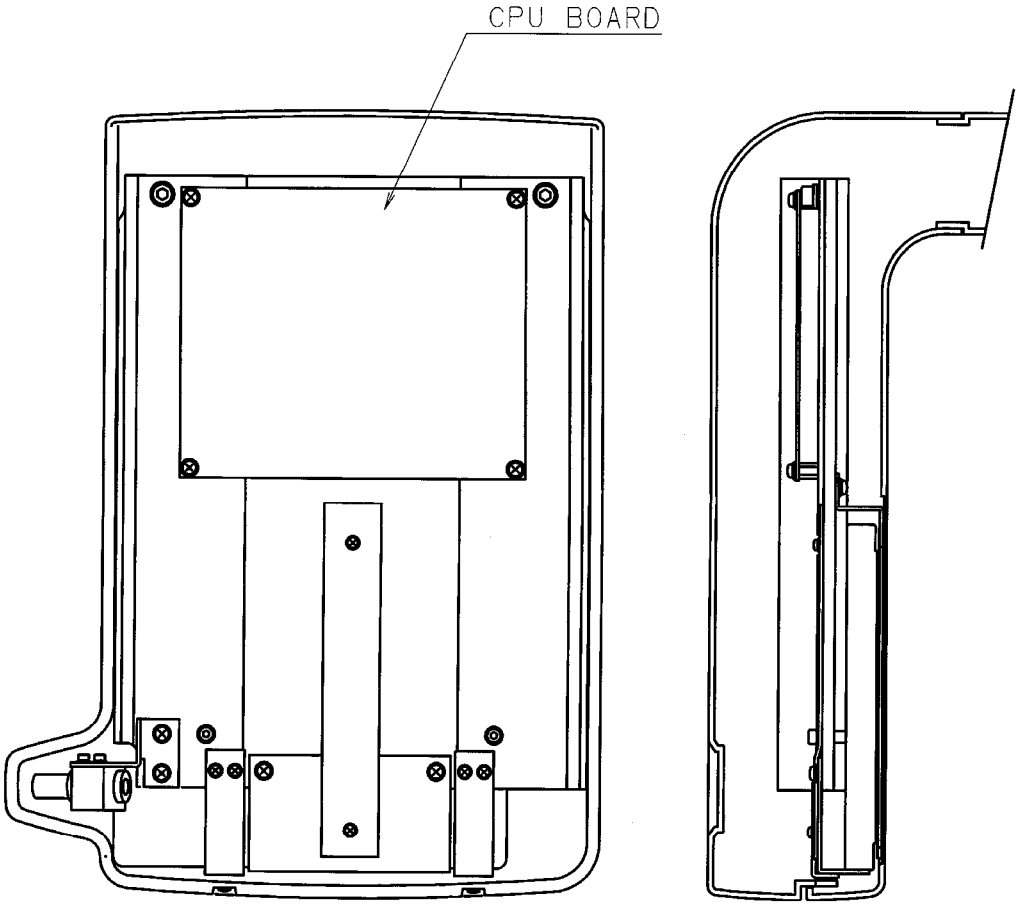

1.4 Sliding Unit

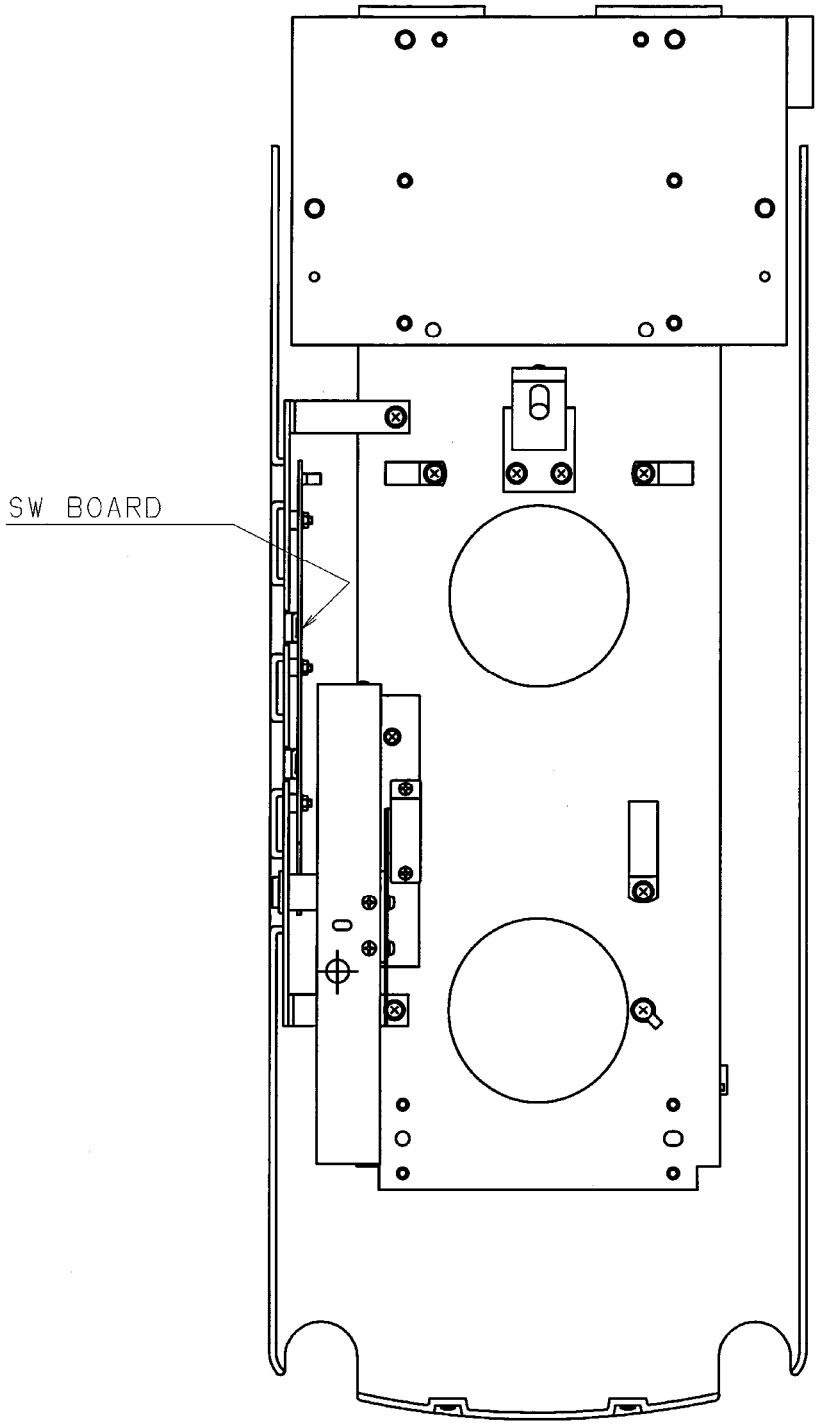

9. Parts List

1. Rotation Unit

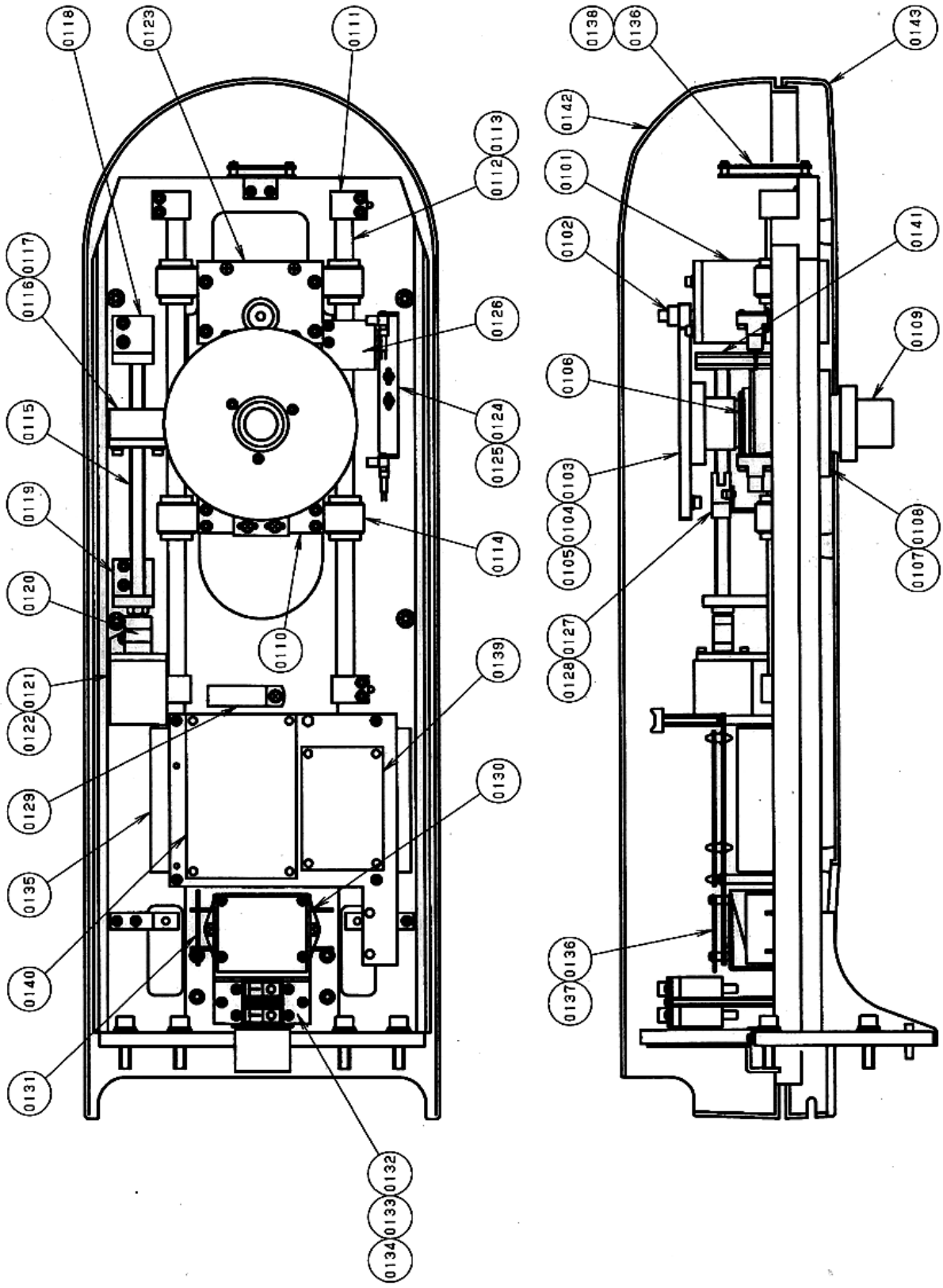

NO.	Drawing No.	Part Name	Quantity
0101	977-79024-03	Motor(PK564AN-TG20)	1
0102	408-09683	Gear(Small)	1
0103	308-03385	Gear(Large)	1
0104	308-03302	Boss(B)	1
0105	408-07104	Key	1
0106	923-92004-08	Fine U-Nut(FU07SC)	1
0107	930-00017-04	Bearing(6007ZZ)	2
0108	308-03359	Boss	1
0109	308-03360	Axis Suspension	1
0110	308-03352	Base	1
0111	408-09671	Pillow Block(2)	4
0112	408-11348	Shaft	2
0113	931-03004-07	Linear Ball Bearing (LM-13)	4
0114	408-09672	Bearing Holder	4
0115	931-50011	Ball screw	1
0116	408-09670	Nut Holder	1
0117	408-09673	Mounting Plate	1
0118	408-11351	Shaft Holder (B)	1
0119	408-09667	Shaft Holder (A)	1
0120	932-41003-06	Coupling(NB-08)	1
0121	977-79021-05	Motor(PK545-NA)	1
0122	408-09669	Motor Bracket	1
0123	408-09679	Motor Base	1
0124	978-60004-04	Photo micro sensor (EE-SX672)	2
0125	408-11350	Sensor Bracket (B)	2
0126	408-11350	Fin	1
0127	978-60004-07	Photo micro sensor (EE-SX672)	1
0128	408-09678	Sensor Bracket (A)	1
0129	075-08003-03	Noise Filter (ESD-R-38D)	1
0130	975-00003-03	Noise Filter (GT215J)	1
0131	408-08757-03	NFI Board Assy・	1
0132	408-11782	Bracket	1
0133	965-85022	Circuit Protector (IN-1-A8E-13-1B)	2
0134	937-38018-68	Spacer(ASB-395)	2
0135	974-80061-01	Switching Power Supply (PM110-14A)	1
0136	977-79023-01	Driver(SD5107P)	2
0137	408-11345	Bracket	1
0138	408-09680	Bracket	1
0139	408-09551	CNI Board	1
0139-01	972-05052-09	F2 FUSE 4A 125V	1
0140	408-11364	Power Board 5 Assy・	1
0141	937-38026-10	Spacer(BSF655)	2
0142	108-01244	Rotation unit cover (1)	1
0143	108-01245	Rotation unit cover (2)	1

2 Arm Section (High Voltage Inverter side)

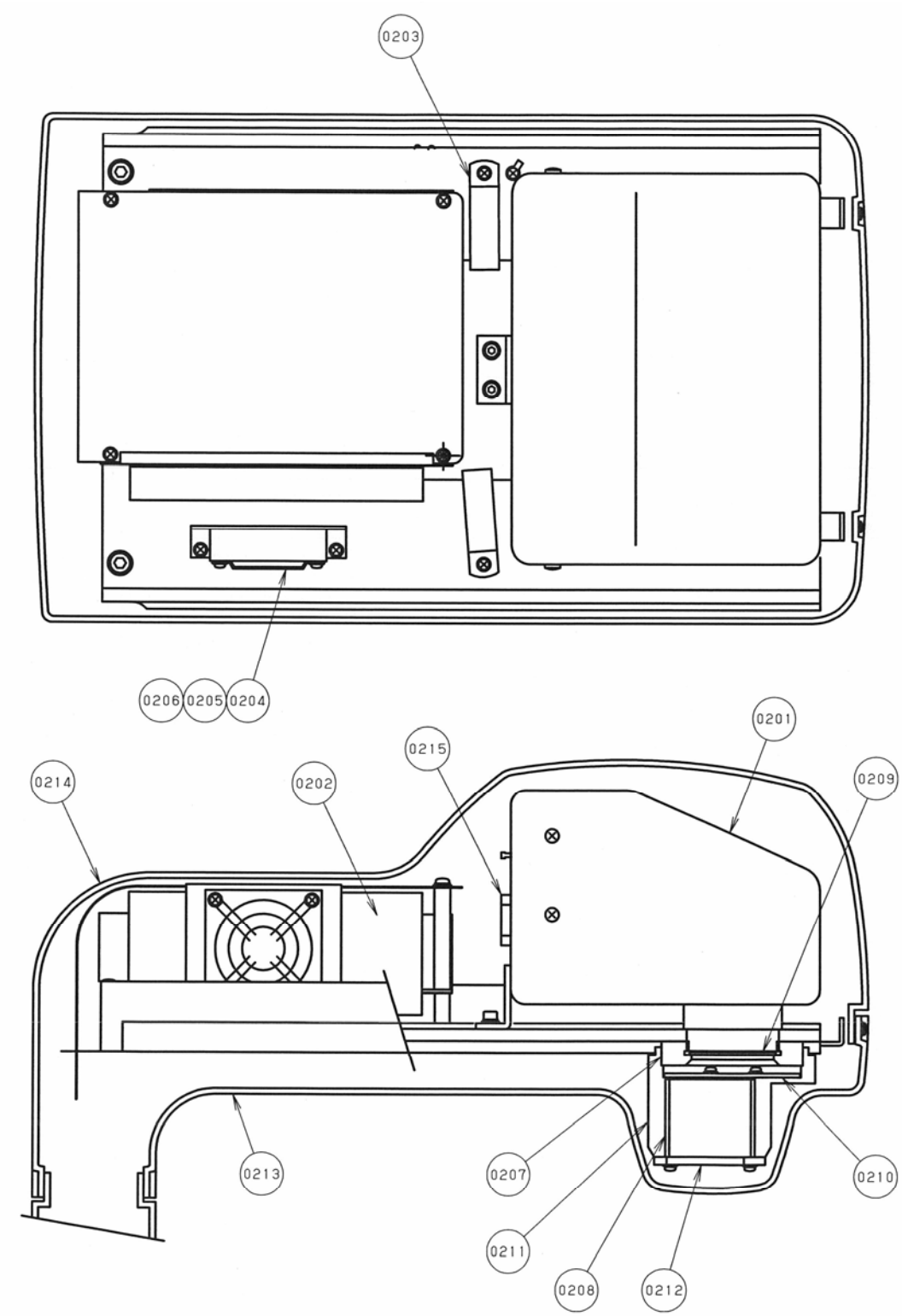

No.	Drawing No.	Part Name	Quantity
0201	208-02025	X-ray generator Assy	1
0202	974-80052-00	Inverter Board	1
0202-01		F1 FUSE 15A 125V	1
0203	075-08003-01	Line Filter	2
0204	408-07867	Fan Bracket	1
0205	942-60019-04	Fan 109R (109R0624H402)	1
0206	942-60013-03	Fan Guard (FG6B)	1
0207	408-11368	Fixing Plate for Front Panel	1
0208	408-11366	Shielding Tube	1
0209	408-07408	Filter	1
0210	408-11365	Shielding lead	1
0211	308-03924	Tube	1
0212	408-11367	Mask	4
0213	208-02141	Head Cover (2)	1
0214	208-02142	Head Cover (1)	1
0215	961-00020-54	Thermal Guard (OHD3-55B)	1

3 Arm Section (Digital Sensor side)

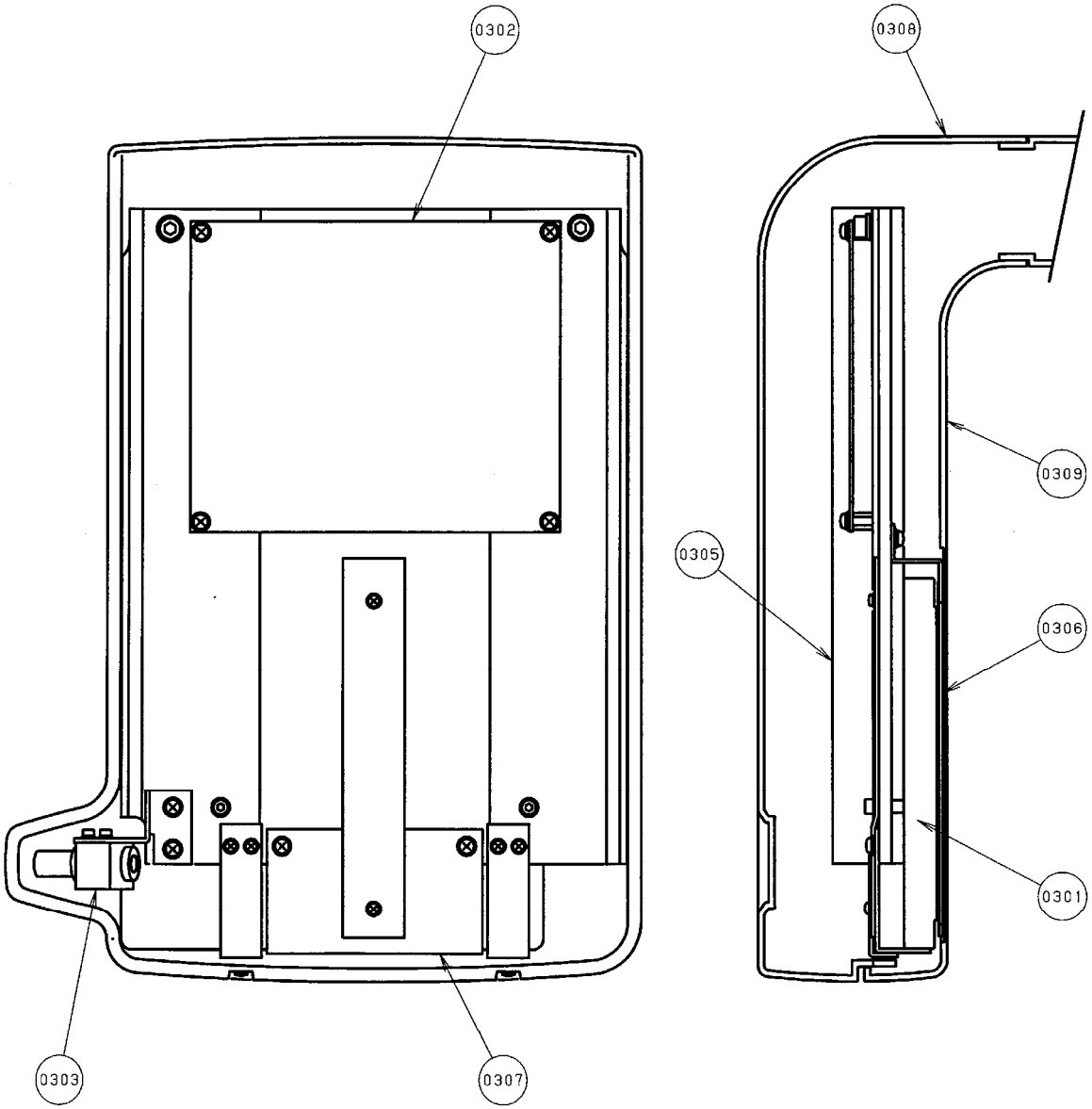

No.	Drawing No.	Part Name	Quantity
0301	988-50201	Digital Sensor	1
0302	408-10713	CPU Board Assy	1
0302-01	972-05052-03	F1 FUSE 1A 125V	1
0302-02	972-05052-03	F2 FUSE 1A 125V	1
0302-03	972-05052-05	F3 FUSE 2A 125V	1
0302-04	972-05052-07	F4 FUSE 3A 125V	1
0302-05	972-05052-07	F5 FUSE 3A 125V	1
0303	308-03920	Laser marking projector Assy	1
0304	408-11361	Logo sheet	1
0305	208-02138	Frame	1
0306	408-09709	Secondary Slit	1
0307	408-11356	Holder	1
0308	108-01246	Sensor Cover (1)	1
0309	108-01246	Sensor Cover (2)	1

4 Sliding Unit

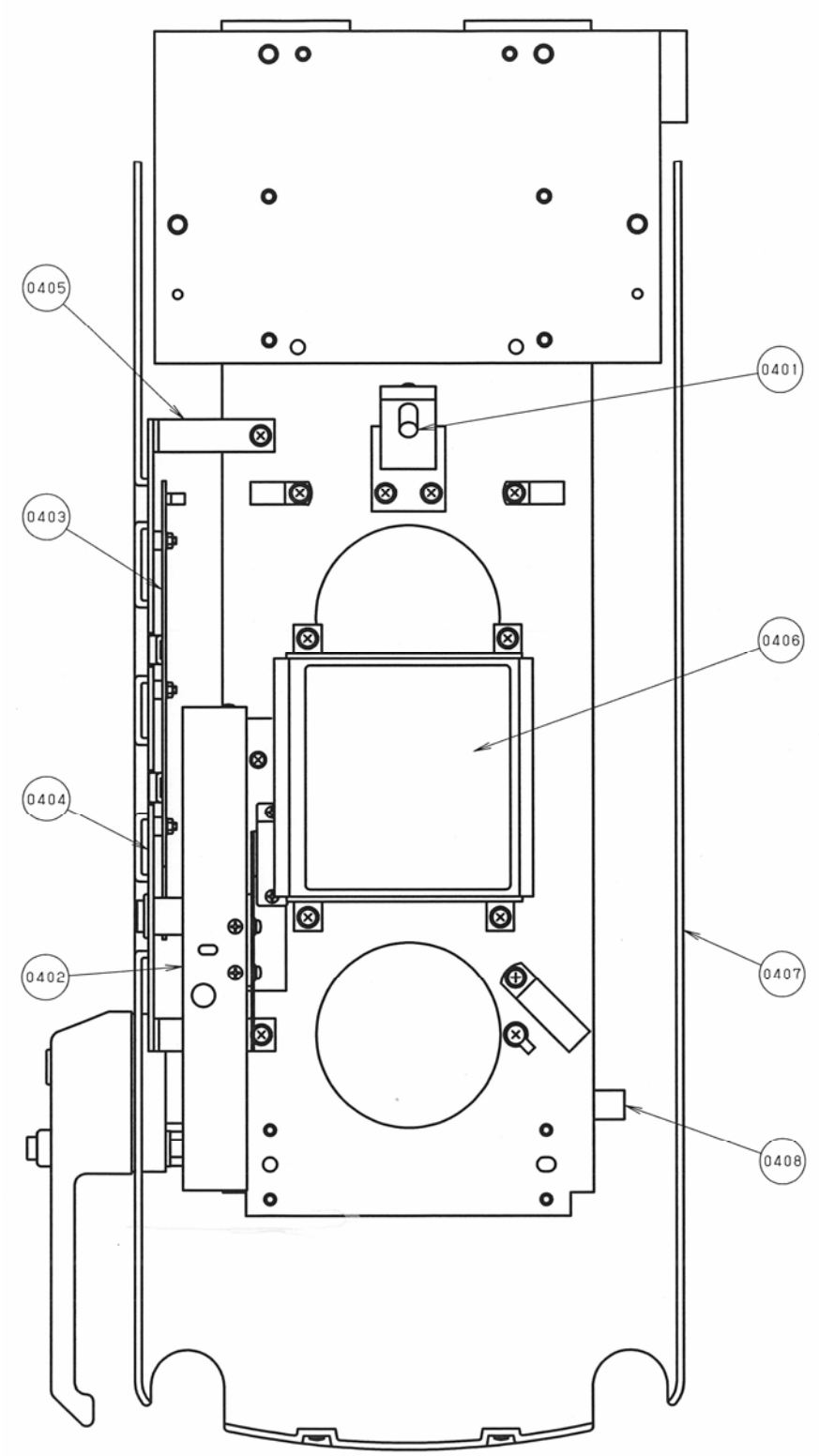

No.	Drawing No.	Part Name	Quantity
0401	408-09712	Laser marking projector Assy	1
0402	308-03373	Laser marking projector Assy	1
0403	408-11322	Power Switch Assy	1
0404	308-03919	Frame	1
0405	408-09723	Fixing Plate	2
0406	408-11343	Mirror	1
0407	108-01243	Sliding Unit Cover	1
0408	408-06102-01	Strain Relief	1

5 Chinrest Assy.

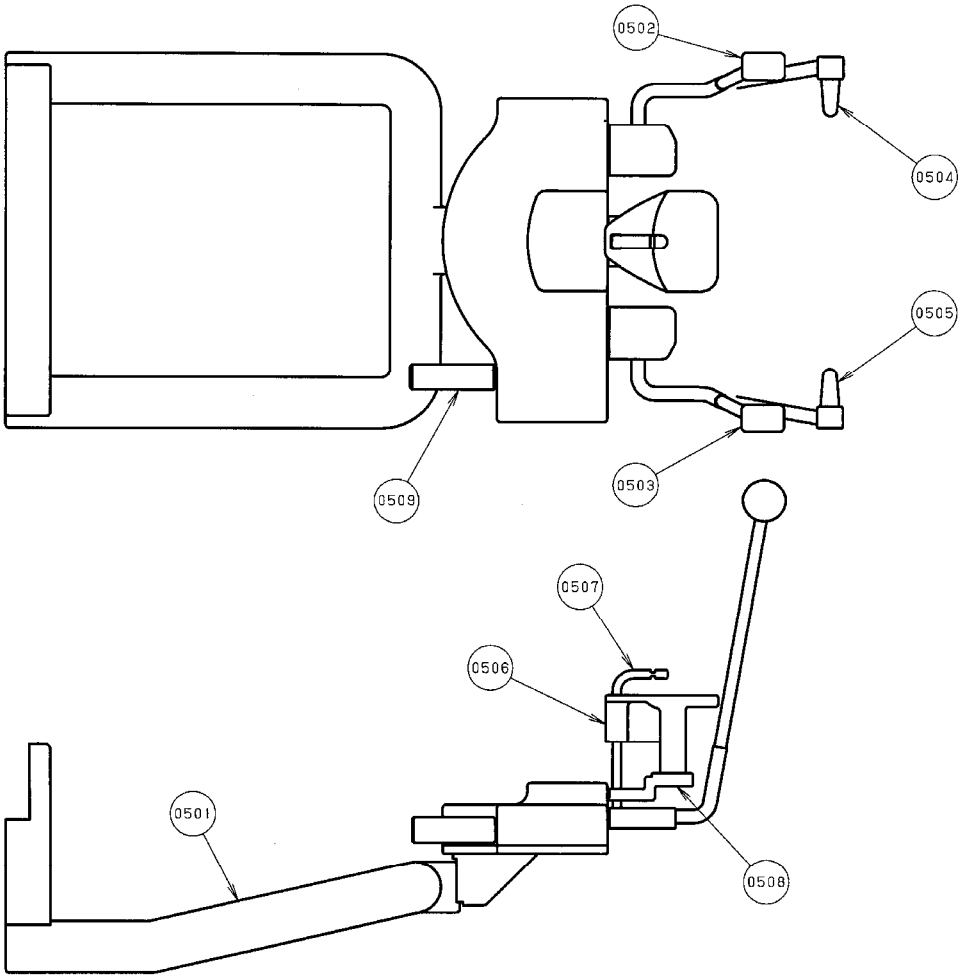

09

No.	Drawing No.	Part Name	Quantity
0501	208-02035	Handle (Grip)	1
0502	308-02320-01	Head holding Assy (Right)	1
0503	308-02320-02	Head holding Assy (Left)	1
0504	308-02321-01	Year rod Assy (Right)	1
0505	308-02321-02	Year rod Assy (Left)	1
0506	308-03083	Bite fork	1
0507	408-05861	Bite fork	1
0508	408-06085	Holder	1
0509	408-06071	Knob	1

6 Stand

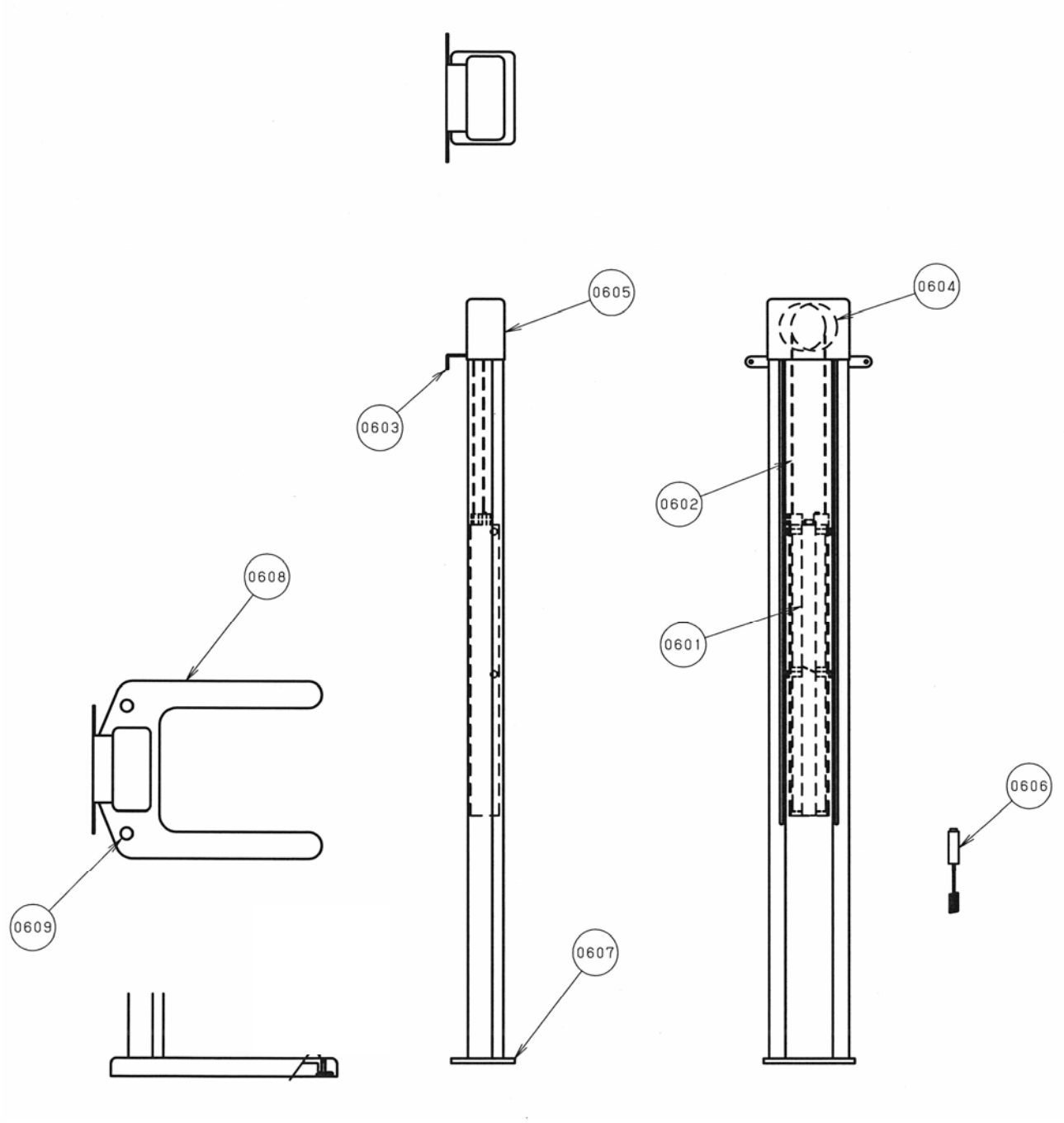

No.	Drawing No.	Part Name	Quantity
0601	308-3597	Counter Weight Assy.	1
0602	408-09665-01	Wire Assy.	1
0603	408-10412	Bracket	1
0604	308-03596	Pulley Assy with Lock	1
0605	408-09756	Top cover	2
0606	964-50055	Exposure Switch	1
0607	408-09863	Flange	1
0608	208-02043	Free Standing Base	1
0609	942-40002-17	Hole for anchor	2

10. MAINTENANCE CHECK

⚠ WARNING

High voltage is applied to some parts inside the equipment. Take extra care when removing the covers.
Before beginning repair work, turn OFF the power of equipment and unplug from electrical outlet.
After unplugged the equipment, wait for 10 minutes or more before starting a repair work.

Specialized knowledge, experience and special measuring instruments are required to check this equipment. To maintain the performance of equipment, please perform daily check (with eyes) and implement periodic maintenance by dealer service personnel.

Dental X-ray Equipment Maintenance Check List

Maintenance by service personnel: 1 or 2 times/year

Check Item	Purpose of Check	Contents of Check	Method
Electricity Condition	Check power supply voltage range	Check the compatibility between the power supply voltage connected to the equipment and the specified voltage for the equipment.	○
Appearance and Indication	(1) Appearance of equipment	a. Deformation, flaw, nameplate b. Cautions	○
	(2) Inside of equipment	Check defacement and dust.	○
Installation Environment	Temperature, humidity, gas	Check the compatibility of environmental ambient of the place where the equipment will be used.	●
	Levelness of equipment	Check the effect on the equipment	●
	Floor and equipment stabilizing condition	Check vibration and movement stability of the equipment.	●
	Check obstacles	Check that there is no obstacle within the movement range of the equipment.	○
	Rust development condition	Check the condition of rust development functional safety.	○
Operation Test	Operation test before check	Check operating condition of the equipment.	⦿
	Operation test after check	Check operating condition of the equipment.	⦿
Safety Test for Electric Shock	Insulation resistance	Check resistance between power line and the earth.	●
	Leaked current from the outer cover	Check the current leaking from the outer cover of the equipment to the earth.	●
	Earthing resistance	Check the resistance between exposed metal portion of the equipment and the earthing point.	●
	Resistance of earthing wire	Check the resistance between the earth terminal of the equipment and earthing point.	●

Check Item	Purpose of Check	Contents of Check	Method
Operation Accuracy of Equipment	Check operation of power supply circuit	Check the voltage of power supply circuit.	●
	Check operation of radiographic circuit	Check the operating waveform and setting values of control circuit.	●
	Check operation of operation circuit	Check operation of operation sequence.	●
	Accuracy of positioning mechanism	Check deterioration of the positioning mechanism.	●
	Check operation of protection circuit	Check the setting values and operating condition of protection circuit.	●
	Check operating condition indicator	Check the circuit function to indicate the operating condition.	●
Indication during X-ray irradiation	Check irradiation of X-ray and the indication are in sync	Check the operation of indicator during X-ray irradiation.	⦿
X-ray Generator	X-ray tube housing	Check leakage of insulating oil.	○
	Low voltage cable	Check wear, flaw, tension and twist.	○
	Irradiation cone	Check looseness, deformation and damage.	○
	Filter	Check coming off and damage.	○
	Slit Plate (Collimator)	Check off-alignment of irradiation field and irradiation width.	○
Radiographic Mechanism	Rotation and movement of X-ray generator	Check slip, abnormal sound and stopping accuracy.	⦿
	Movement of arm		
	Patient positioning mechanism	Play, looseness, operationality and stability.	●
	Positioning Beams	Check the brightness and positioning accuracy.	○
Elevating Mechanism	Wire rope	Check breaking of wire and end portion.	○
	Braking mechanism	Check the movement.	⦿
	Electromagnetic lock		
	Upward and downward movement condition	Check smoothness of movement	○
X-ray Output	X-ray tube voltage	Check X-ray tube voltage.	●
	X-ray tube current	Check X-ray tube current.	●
	Exposure time	Check exposure time.	●

Symbol	Checking Method
○	Check with eyes
●	Check by using measuring instruments etc.
⦿	Check by operating the equipment.

11. CONTACT INFORMATION

Please contact our sales office or a distributor near you.

Belmont Equipment
A Division of TAKARA BELMONT USA, Inc.
101 Belmont Drive
Somerset, NJ 08873
Toll Free (800) 223-1192
Toll Free Fax (800) 280-7504
www.belmontequip.com

TAKARA COMPANY, CANADA, LTD.
2706 South Sheridan Way
Mississauga, Ontario, Canada L5J 2M4
Toll Free (800) 268-5351
Fax (905) 822-6203
www.takarabelmont.ca

12. Revision data of this manual

This manual was created on Oct 2008.
Revised December 2010

Document number : B02-T157N