GE Medical Systems

Technical Publications

2218878–100

Revision 8

ADVANTX LCA+/LCV+/LC+ & LCLP+/LCN+/LCALP+ Positioner Cabinet Schematics

sch

do not duplicate

Copyright© 1998, 1999, 2000, 2001, 2002 by General Electric Co.

ATTENTION

LES APPAREILS À RAYONS X SONT DANGEREUX À LA FOIS POUR LE PATIENT ET POUR LE MANIPULATEUR SI LES MESURES DE PROTECTION NE SONT PAS STRICTEMENT APPLIQUEES

Bien que cet appareil soit construit selon les normes de sécurité les plus sévères, la source de rayonnement X représente un danger lorsque le manipulateur est non qualifié ou non averti. Une exposition excessive au rayonnement X entraîne des dommages à l'organisme.

Par conséquent, toutes les précautions doivent être prises pour éviter que les personnes non autorisées ou non qualifiées utilisent cet appareil créant ainsi un danger pour les autres et pour elles–mêmes.

Avant chaque manipulation, les personnes qualifiées et autorisées à se servir de cet appareil doivent se renseigner sur les mesures de protection établies par la Commission Internationale de la Protection Radiologique, Annales 26 : Recommandations de la Commission Internationale sur la Protection Radiologique et les normes nationales en vigueur.

WARNING

X–RAY EQUIPMENT IS DANGEROUS TO BOTH PATIENT AND OPERATOR UNLESS MEASURES OF PROTECTION ARE STRICTLY OBSERVED

Though this equipment is built to the highest standards of electrical and mechanical safety, the useful x–ray beam becomes a source of danger in the hands of the unauthorized or unqualified operator. Excessive exposure to x–radiation causes damage to human tissue.

Therefore, adequate precautions must be taken to prevent unauthorized or unqualified persons from operating this equipment or exposing themselves or others to its radiation.

Before operation, persons qualified and authorized to operate this equipment should be familiar with the Recommendations of the International Commission on Radiological Protection, contained in Annals Number 26 of the ICRP, and with applicable national standards.

ATENCION

LOS APARATOS DE RAYOS X SON PELIGROSOS PARA EL PACIENTE Y EL MANIPULADOR CUANDO LAS NORMAS DE PROTECCION NO ESTAN OBSERVADAS

Aunque este aparato está construido según las normas de seguridad más estrictas, la radiación X constituye un peligro al ser manipulado por personas no autorizadas o incompetentes. Una exposición excesiva a la radiación X puede causar daños al organismo.

Por consiguiente, se deberán tomar todas las precauciones necesarias para evitar que las personas incompetentes o no autorizadas utilicen este aparato, lo que sería un peligro para los demás y para sí mismas.

Antes de efectuar las manipulaciones, las personas habilitadas y competentes en el uso de este aparato, deberán informarse sobre las normas de protección fijadas por la Comisión Internacional de la Protección Radiológica, Anales No 26: Recomendaciónes de la Comisión Internacional sobre la Protección Radiológica y normas nacionales.

ACHTUNG

RÖNTGENAPPARATE SIND EINE GEFAHR FÜR PATIENTEN SOWIE BEDIENUNGSPERSONAL, WENN DIE GELTENDEN SICHERHEITSVORKEHRUNGEN NICHT GENAU BEACHTET WERDEN

Dieser Apparat entspricht in seiner Bauweise strengsten elektrischen und mechanischen Sichereitsnormen, doch in den Händen unbefugter oder unqualifizierter Personen wird er zu einer Gefahrenquelle. Übermäßige Röntgenbestrahlung ist für den menschlichen Organismus schädlich.

Deswegen sind hinreichende Vorsichtsmaßnahmen erforderlich, um zu verhindern, daßunbefugte oder unqualifizierte Personen solche Geräte bedienen oder sich selbst und andere Personen deren Bestrahlung aussetzen können.

Vor Inbetriebnahme dieses Apparats sollte sich das qualifizierte und befugte Bedienungspersonal mit den geltenden Kriterien für den gefahrlosen Strahleneinsatz durch sorgfältiges Studium des Hefts Nr. 26 der Internationalen Kommission für Strahlenschutz (ICRP) vertraut machen: Empfehlungen der Internationalen Kommission für Strahlenschutz und anderer nationaler Normenbehörden.

WARNING

VOLTAGE PRESENT

Before any intervention:

1. Switch **OFF** CB2 on the AC Power Distribution (VPE1 A2 A25) in Positioner Cabinet.

2. Switch **OFF** Positioner Cabinet Circuit Breaker in Generator Power Cabinet.

LOCK OUT/ TAG OUT

When necessary, perform the following lock out/ tag out procedure:

1. Cut the customer power distribution cabinet from its energy source.
2. Inform all concerned parties of the lockout.
3. Lock and put a lockout label on the cabinet.
4. Verify the absence of voltage in the cabinet.
5. Proceed with service to the equipment.
6. Unlock the cabinet and remove the label from the cabinet.
7. Power–up the system.

Blank page.

REVISION HISTORY

REV	DATE	REASON FOR CHANGE
0	September 1998	First release
1	October 1998	Update
2	April 1999	Update
3	June 1999	Update
4	November 1999	New Collimator Board
5	April 2000	New System Interface Board (SPR BUCge36233)
6	August 2000	ZID2M3 Added Tap switching and Regulator board layouts
7	February 2001	ZID2M4: Added Smart Amplifier Board 2283120 Schematics
8	February 2002	Added Roadrunner V2 Board 2289661–4 and AC distribution (version 2) Schematics

LIST OF EFFECTIVE PAGES

PAGE NUMBER	REVISION NUMBER	PAGE NUMBER	REVISION NUMBER	PAGE NUMBER	REVISION NUMBER
Title page	8				
Safety Instruction	8				
i thru xii	8				
1–1 thru 1–14	8				
2–1 thru 2–194	8				
3–1 thru 3–20	8				
4–1 thru 4–16	8				

Blank page.

ILLUSTRATION **1–1**
SINGLE PLANE VERSION

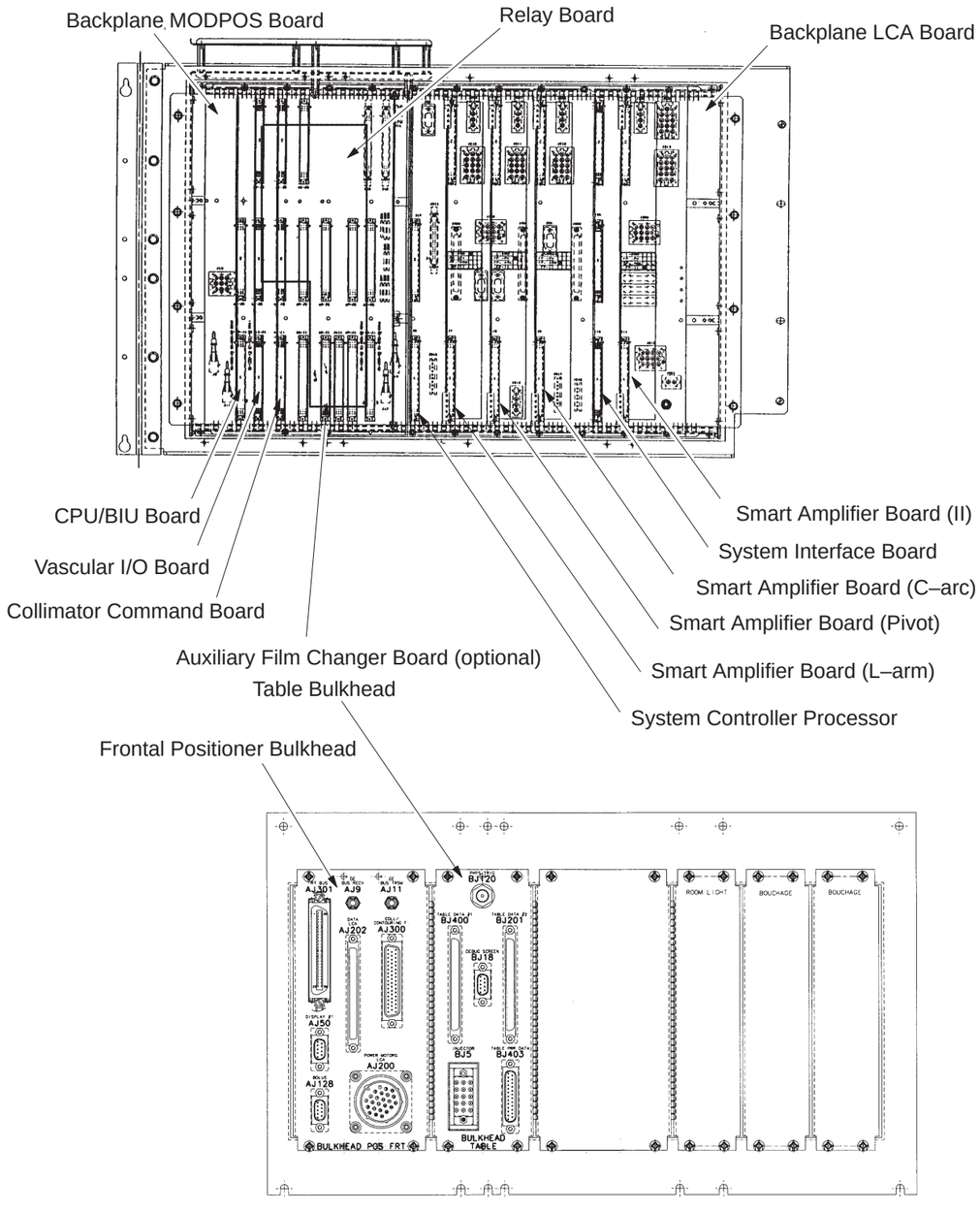

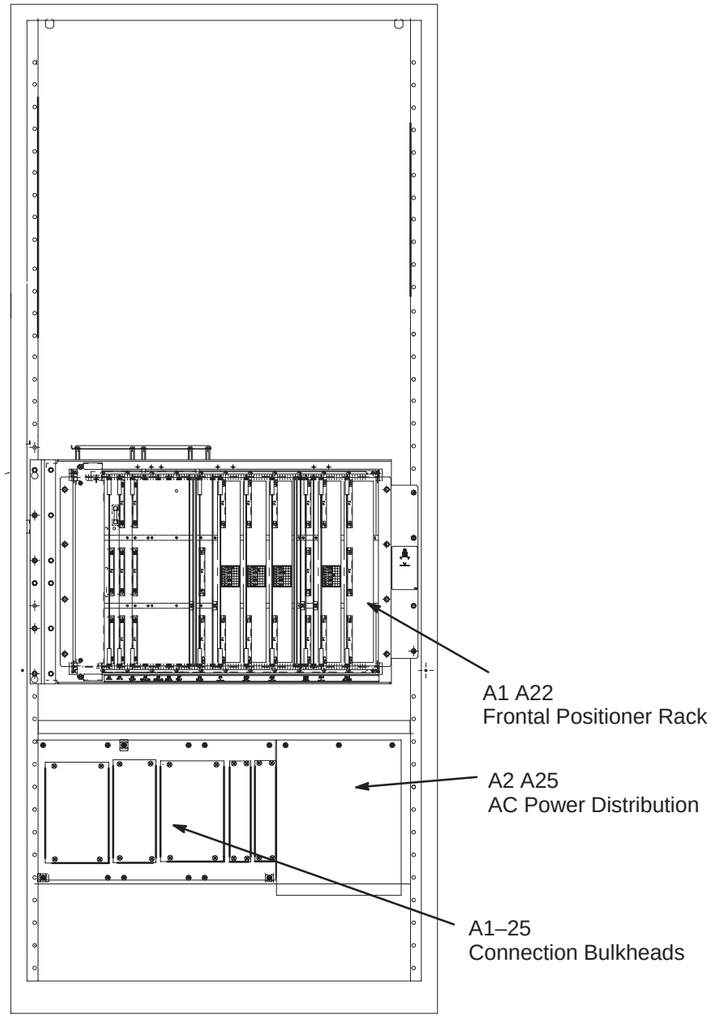

Blank page.

ILLUSTRATION **1–2**
BIPLANE VERSION

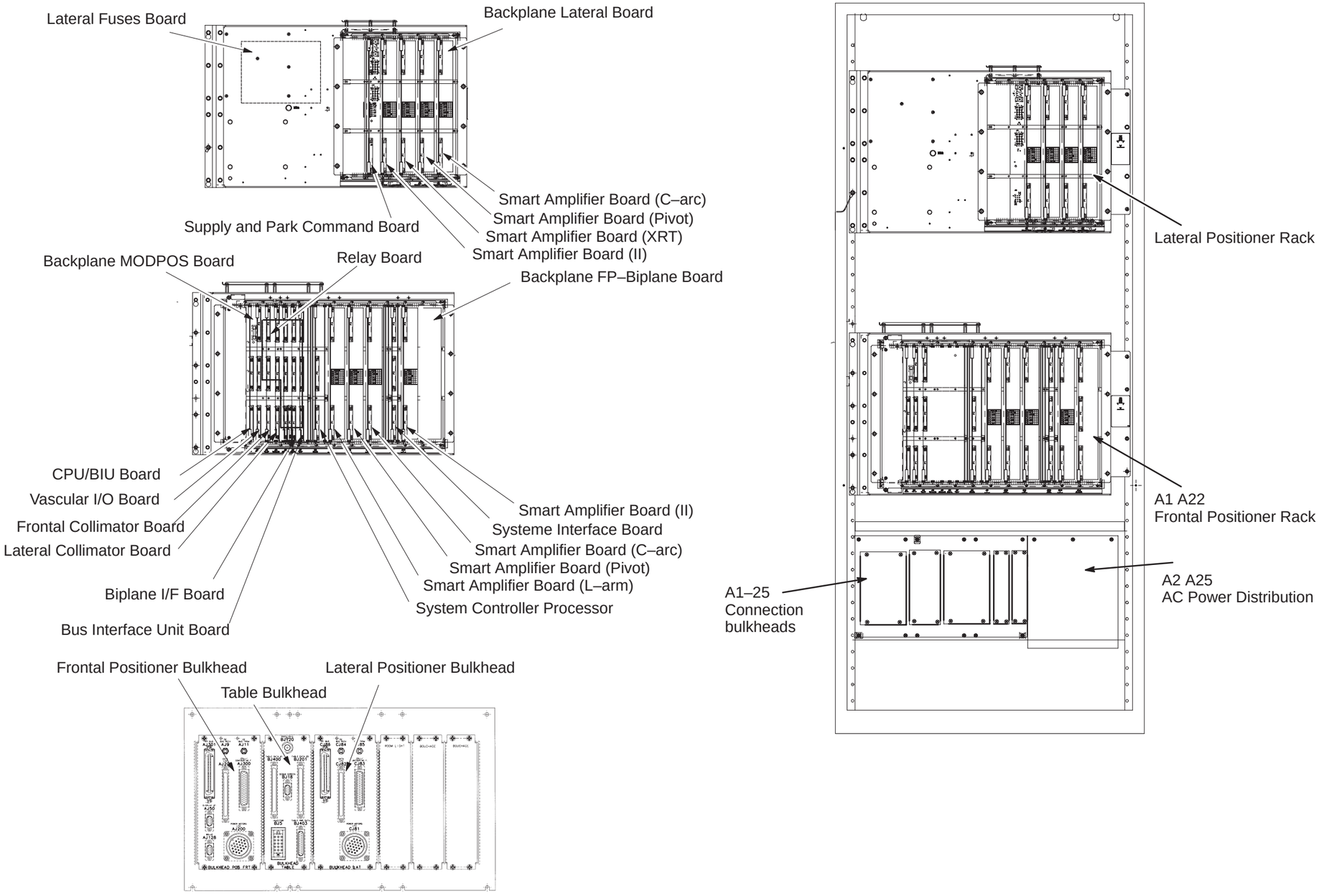

Blank page.

SECTION 1
REFERENCE DESIGNATORS

Reference designators are codes which simplify component identification. They are often called location codes because they derive from the location of components and assemblies within a major assembly. The code is a convenient shorthand to identify each assembly or component and where it is located in the hardware and in the schematics.

Reference designations are specified whenever practical - on cabinet-door diagrams, on most schematics, on assemblies.

LOCATION CODE	DESCRIPTION
VPE1	**Positioner Cabinet**
VPE1 A1 Axx	**Lateral Positioner Rack**
A15	Supply and Park Command Board
	Smart Amplifier Board
	Smart Amplifier Board
	Smart Amplifier Board
	Smart Amplifier Board
VPE1 A1 A22	**Frontal Positioner Rack**
A2	CPU/BIU Board
A3	Vascular I/O Board
A4	Frontal Collimator Board
A5	Lateral Collimator Board
A6	Auxiliary (or Ceiling) Film Changer Board
A7	Biplane I/F Board
A8	Bus Interface Unit Board
A9	System Controller Processor
A10	L-arm Smart Amplifier Board
A11	Pivot Smart Amplifier Board
A12	C-arc Smart Amplifier Board
A13	System Interface Board
A14	II Smart Amplifier Board
A16	Rack fans
VPE1 A1 A25	**Connection Bulkhead**
A1	Frontal Positioner Bulkhead
A2	Table Bulkhead
A3	Lateral Positioner Bulkhead
A4	Film Changer Connections
A5	Arterio P6 or BCM Connections
A6	Room-light Connections
VPE1 A2 A25	**AC Distribution & Ground Bulkhead**

Blank page.

SECTION 2
LIST OF THE SCHEMATICS: SINGLE PLANE VERSION

1. INTERCONNECTION

TITLE	DRAWING NUMBER	PAGE NUMBER
Interconnection Block Diagram	–	1–3
External Connectors Description (1/8 to 8/8)	–	1–7 TO 1–14

2. FRONTAL POSITIONER RACK

TITLE	DRAWING NUMBER	PAGE NUMBER
Backplane MODPOS Component Layout	2225632 ADW	2–3
Backplane MODPOS Circuit Diagram (1/8 to 8/8)	2225632 SCH	2–4 TO 2–11
Backplane MODPOS Component Layout	2238228 ADW	2–13
Backplane MODPOS Circuit Diagram (1/8 to 8/8)	2238228 SCH	2–14 TO 2–21
CPU/BIU Board Component Layout	46-321384G1	2–23
CPU/BIU Board Circuit Diagram (1/23 to 23/23)	46-321384S	2–24 TO 2–46
Vascular I/O Board Component Layout	46-264458G1	2–47
Vascular I/O Board Circuit Diagram (1/11 to 11/11)	46-264458S	2–48 TO 2–58
Collimator Command Board Component Layout	2244231 ADW	2–59
Collimator Command Board Circuit Diagram (1/8 to 8/8)	2244231 SCH	2–60 TO 2–67
Relay Board Component Layout (1/4 to 3/4 only)	2253722 ADW	2–83 TO 2–85
Relay Board Circuit Diagram (1/11 to 11/11)	2253722 SCH	2–86 TO 2–96
Backplane LCA Board Component Layout (1/2 only)	2253100 ADW	2–97
Backplane LCA Board Circuit Diagram (1/9 to 9/9)	2253100 SCH	2–98 TO 2–106
Backplane LCA Board Component Layout	2225630 ADW	2–107
Backplane LCA Board Circuit Diagram (1/8 to 8/8)	2225630 SCH	2–108 TO 2–115
System Controller Processor:		
CPU68040 I/O Single/Biplane Adaptor Board Component Layout	2247665 ADW	2–117
CPU68040 I/O Single/Biplane Adaptor Board Circuit Diagram (1/6 to 6/6)	2247665 SCH	2–118 TO 2–123
or CPU Roadrunner V2 Board Component Layout	2289661–4 ADW	2–125
CPU Roadrunner V2 Circuit Diagram (1/18 to 18/18)	2289661–4 SCH	2–126 TO 2–143
Smart Amplifier Board Component Layout	2211384 ADW	2–145
Smart Amplifier Board Circuit Diagram (1/8 to 8/8)	2211384 SCH	2–146 TO 2–153
System Interface Board Component Layout	2267936 ADW	2–167
System Interface Board Diagram (1/12 to 12/12)	2267936 SCH	2–168 TO 2–179
CPU Display LP/LC	2236103 SCH	2–189 AND 2–190
PCB Display LP/LC	45–259469 SCH	2–191 TO 2–194

3. AC DISTRIBUTION

TITLE	DRAWING NUMBER	PAGE NUMBER
AC Distribution version 1		
AC Distribution Unit (version 1)	6120–456	4–3
TAP Switching Board (version 1)	6120–459	4–4 TO 4–5
Regulation Board Circuit Diagram 1/3 to 3/3 (version 1)	6120–507	4–6 TO 4–9
AC Distribution version 2		
AC Distribution Unit (version 2)	2234239–02SCH	4–11
TAP Switching Board (version 2)	2221007–02SCH	4–12 TO 4–13
Regulation Board Circuit Diagram (version 2)	2241043–02SCH	4–14 TO 4–15

Blank page.

SECTION 3
LIST OF THE SCHEMATICS: BIPLANE VERSION

1. INTERCONNECTION

TITLE	DRAWING NUMBER	PAGE NUMBER
Interconnection Block Diagram	–	1–3
External Connectors Description (1/8 to 8/8)	–	1–7 TO 1–14

2. FRONTAL POSITIONER RACK

TITLE	DRAWING NUMBER	PAGE NUMBER
Backplane MODPOS Component Layout	2225632 ADW	2–3
Backplane MODPOS Circuit Diagram (1/8 to 8/8)	2225632 SCH	2–4 TO 2–11
Backplane MODPOS Component Layout	2238228 ADW	2–13
Backplane MODPOS Circuit Diagram (1/8 to 8/8)	2238228 SCH	2–14 TO 2–21
CPU/BIU Board Component Layout	46-321384G1	2–23
CPU/BIU Board Circuit Diagram (1/23 to 23/23)	46-321384S	2–24 TO 2–46
Vascular I/O Board Component Layout	46-264458G1	2–47
Vascular I/O Board Circuit Diagram (1/11 to 11/11)	46-264458S	2–48 TO 2–58
Collimator Command Board Component Layout	2244231 ADW	2–59
Collimator Command Board Circuit Diagram (1/8 to 8/8)	2244231 SCH	2–60 TO 2–67
Biplane I/F Board Component Layout	46–264856	2–69
Biplane I/F Board Circuit Diagram (1/4 to 4/4)	46–264856	2–70 TO 2–73
Bus Interface Unit Board Component Layout	46–226968	2–75
Bus Interface Unit Board Circuit Diagram (1/6 to 6/6)	46–226968	2–76 TO 2–81
Relay Board Component Layout (1/4 to 3/4 only)	2253722 ADW	2–83 TO 2–85
Relay Board Circuit Diagram (1/11 to 11/11)	2253722 SCH	2–86 TO 2–96
Backplane LCA Board Component Layout (1/2 only)	2253100 ADW	2–97
Backplane LCA Board Circuit Diagram (1/9 to 9/9)	2253100 SCH	2–98 TO 2–106
System Controller Processor:		
CPU68040 I/O Single/Biplane Adaptor Board Component Layout	2247665 ADW	2–117
CPU68040 I/O Single/Biplane Adaptor Board Circuit Diagram (1/6 to 6/6)	2247665 SCH	2–118 TO 2–123
or CPU Roadrunner V2 Board Component Layout	2289661–4 ADW	2–125
CPU Roadrunner V2 Circuit Diagram (1/18 to 18/18)	2289661–4 SCH	2–126 TO 2–143
Smart Amplifier Board Component Layout	2211384 ADW	2–145
Smart Amplifier Board Circuit Diagram (1/8 to 8/8)	2211384 SCH	2–146 TO 2–153
System Interface Board Component Layout	2267936 ADW	2–167
System Interface Board Diagram (1/12 to 12/12)	2267936 SCH	2–168 TO 2–179
CPU Display LP/LC (1/2 and 2/2)	45–259470 SCH	2–181 AND 2–182
PCB Display LP/LC (1/6 to 6/6)	2164432 SCH	2–183 TO 2–188

3. LATERAL POSITIONER RACK

TITLE	DRAWING NUMBER	PAGE NUMBER
Backplane Lateral Board Wiring Change	2238987 ADW	3–3
Backplane Lateral Board Circuit Diagram (1/6 to 6/6)	2225634 SCH	3–4 TO 3–9
Smart Amplifier Board Component Layout	See Frontal Pos. Rack	2–145
Smart Amplifier Board Circuit Diagram (1/8 to 8/8)	See Frontal Pos. Rack	2–146 TO 2–153
Supply and Park Command Board Component Layout	2211388 ADW	3–11
Supply and Park Command Board Circuit Diagram (1/4 to 4/4)	2211388 SCH	3–12 TO 3–15
Lateral Fuses Board Component Layout	2154139 ADW	3–17
Lateral Fuses Board Circuit Diagram (1/2 to 2/2)	2154139 SCH	3–18 TO 3–19

4. AC DISTRIBUTION

TITLE	DRAWING NUMBER	PAGE NUMBER
European AC Distribution Unit	6120–456	4–3
TAP Switching Board Circuit Diagram	6120–459	4–5
Regulation Board Circuit Diagram (1/3 to 3/3)	6120–507	4–7 TO 4–9

Blank page.

1. INTERCONNECTION

TITLE	DRAWING NUMBER	PAGE NUMBER
Interconnection Block Diagram	–	1–3
External Connectors Description (1/8 to 8/8)	–	1–7 TO 1–14

Blank page.

REV 8

sch 2218878–100

POSITIONER CABINET SINGLE PLANE BLOCK DIAGRAM

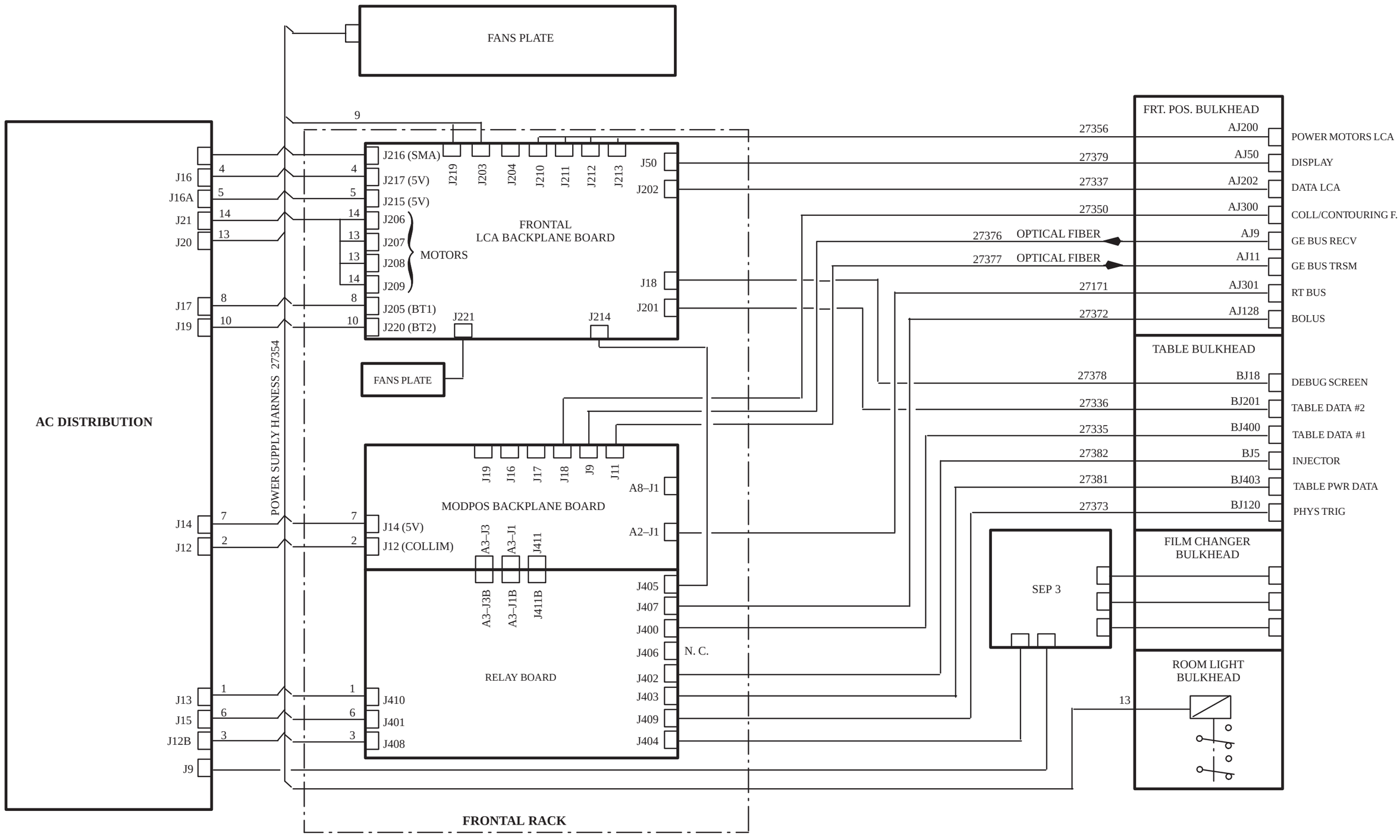

Blank page.

POSITIONER CABINET BIPLANE BLOCK DIAGRAM

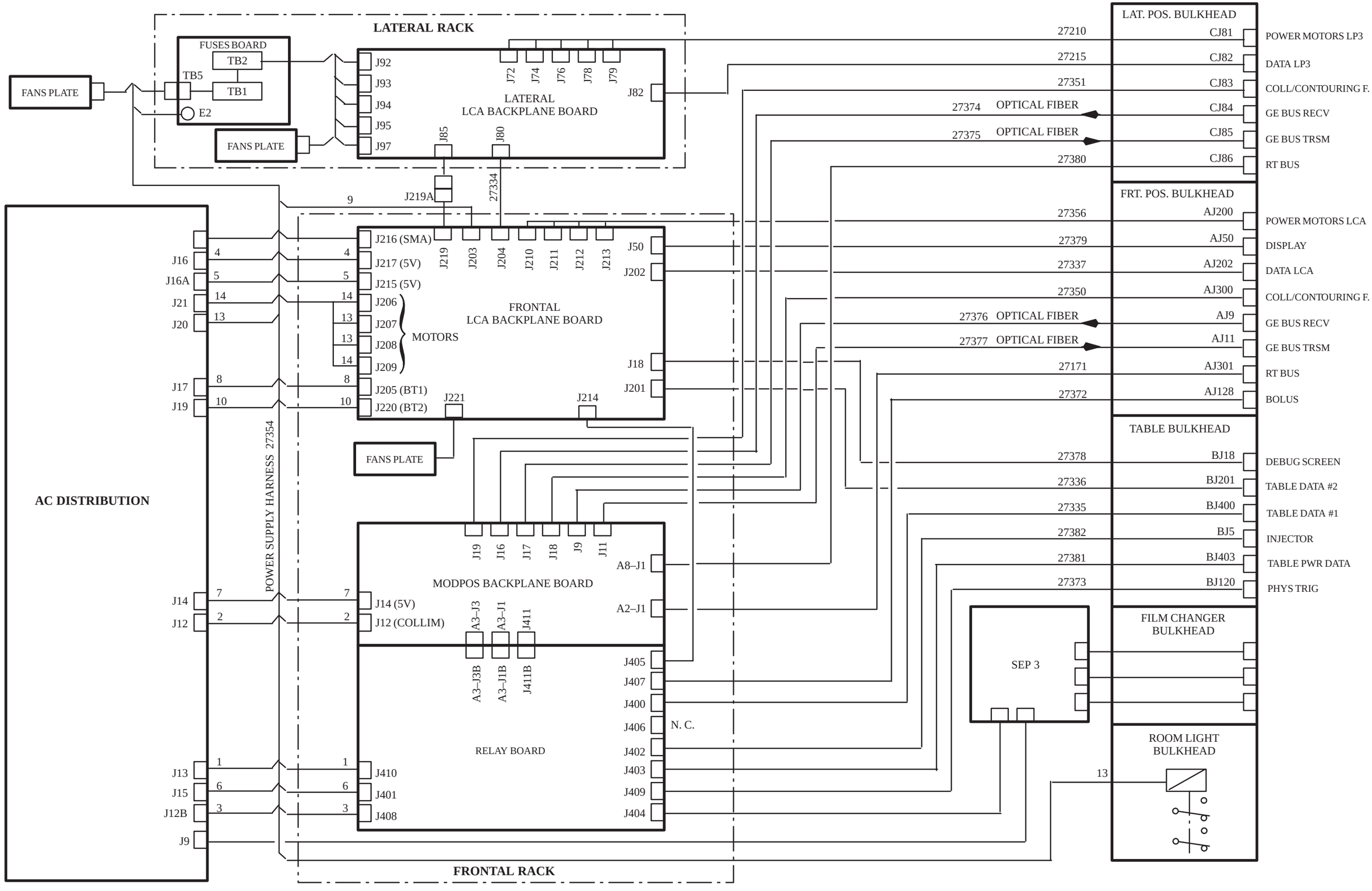

Blank page.

REV 8

EXTERNAL CONNECTORS DESCRIPTION (1/8)

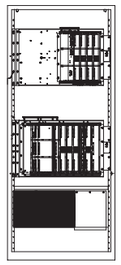

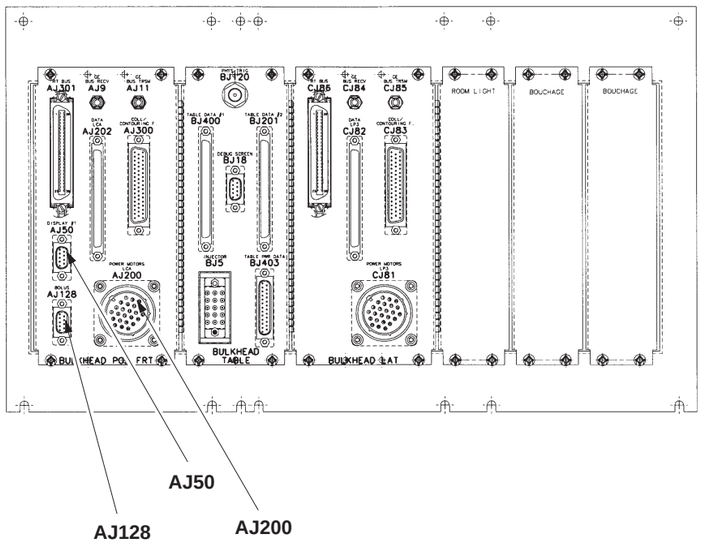

sch 2218878–100

AJ50 – DISPLAY

N	SIGNAL	FRONTAL LCA BACKPLANE BOARD
1	RESDISN	J50–1
2	RESDISP	J50–2
3		
4	DSP1TXDp	J50–4
5	DSP1TXDn	J50–5
6		
7		
8	DSP1RXDp	J50–8
9	DSP1RXDn	J50–9

AJ128 – BOLUS

N	SIGNAL	RELAY BOARD	VASCULAR I/O BOARD
1	PREP REQ1	J407–1	A3–J1B C14
2			
3			
4	TBL TOP POS2	J407–4	A3–J1B C5
5	TBL TOP POS1	J407–5	A3–J1B C4
6	GND	J407–6	
7	P24VDC	J407–7	
8	P24VDC	J407–8	
9	EXP REQ0	J407–9	A3–J1B A12

AJ200 – POWER MOTORS LCA (TO L–ARM: FRT BULKHEAD)

N	SIGNAL	FRONTAL LCA BACKPLANE BOARD
1	BRK + L	J210–6
2	MOT – ARC	J212–10
3	MOT + ARC	J212–4
4	BRK1 + PVT	J207–6
5	MOT – L	J210–10
6	MOT – L	J210–13
7	MOT – ARC	J212–13
8	MOT + ARC	J212–1
9	MOT – II	J213–10
10		
11	MOT + L	J210–1
12	BRK1 – PVT	J207–8
13	BRK + ARC	J212–6
14	MOT – II	J213–13
15		
16	MOT + L	J210–4
17	MOT + PVT	J207–1
18	MOT – PVT	J207–10
19	MOT + II	J213–1
20	MOT + II	J213–4
21	BRK – L	J210–8
22	MOT + PVT	J207–4
23	MOT – PVT	J207–13
24	BRK – ARC	J212–8

INTERCONNECTION

REV 8

EXTERNAL CONNECTORS DESCRIPTION (2/8)

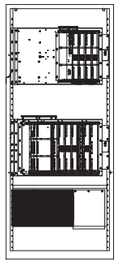

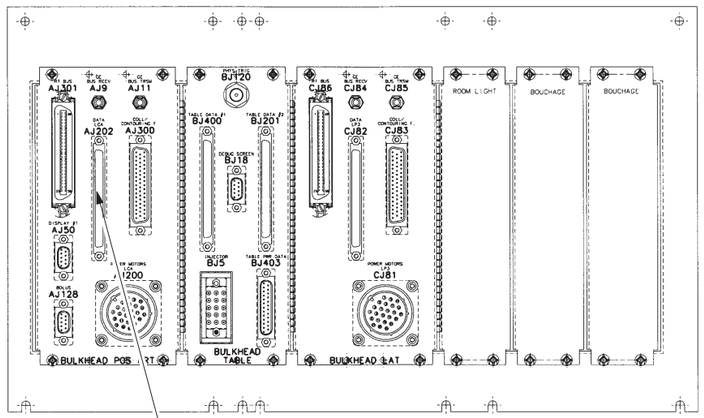

AJ202

sch 2218878–100

AJ202 – DATA LCA (TO L–ARM: POS. CABINET LC DATA)

N	SIGNAL	FRONTAL LCA BACKPLANE BOARD
1	GND	J202–1
2	PGENCA	J202–2
3	GND	J202–3
4	PGENCB	J202–4
5	GND	J202–5
6	PGENCC	J202–6
7	GND	J202–7
8	PGENCD	J202–8
9	AFPHAp	J202–9
10	AFPHAn	J202–10
11	AFPHBp	J202–11
12	AFPHBn	J202–12
13	CPHAp	J202–13
14	CPHAn	J202–14
15	CPHBp	J202–15
16	CPHBn	J202–16
17	C_POTn	J202–17
18	C_POTp	J202–18
19	C_REF	J202–19
20	C_GND	J202–20
21		J202–21
22		J202–22
23		J202–23
24		J202–24
25		J202–25
26		J202–26
27	PUCK_INTER_1	J64–2/J202–27
28	EMERGENCY_STOP_n	J201–50/J202–28
29	FIB21+	J202–29
30	FIB21–	J202–30
31	FIB11+	J202–31
32	FIB11–	J202–32
33	P24R	J202–33
34	P24R	J202–34
35	P24R	J202–35
36	SW_LV1_II	J202–36
37	FRII0+	J202–37
38	FRII0–	J202–38
39	FRII1+	J202–39
40	FRII1–	J202–40
41	SW3+	J202–41
42	FPIIEN	J202–42
43	AUX_CONTROL_SW_n	J202–43
44	AUX_CONTROL_SW_p	J202–44
45	EMERGENCY_STOP+	J201–49/J202–45/J204–40
46	AUX_LIMIT_SW	J202–46
47	LANGRID	J202–47/J204–48
48	SW_LV1_COLL_BIS	J202–48
49	FXB11+	J202–49
50	FXB11–	J202–50

N	SIGNAL	FRONTAL LCA BACKPLANE BOARD
51	A_GND	J202–51
52	A_REF	J202–52
53	A_POTp	J202–53
54	A_POTn	J202–54
55	B_GND	J202–55
56	B_REF	J202–56
57	B_POTp	J202–57
58	B_POTn	J202–58
59	BPHAp	J202–59
60	BPHAn	J202–60
61	BPHBp	J202–61
62	BPHBn	J202–62
63	DPHAp	J202–63
64	DPHAn	J202–64
65	DPHBp	J202–65
66	DPHBn	J202–66
67	D_GND	J202–67
68	D_REF	J202–68
69	D_POTp	J202–69
70	D_POTn	J202–70
71	OV_VACUUM	J202–71
72	OV_VACUUM	J202–72
73		J202–73
74		J202–74
75		J202–75
76		J202–76
77		J202–77
78		J202–78
79	FPIIHDSTP	J202–79
80	D_HDSTP	J202–80
81	D_HDSTP	J202–81
82	D_LIMSWh	J202–82
83	HDSTP	J202–83
84	A_HDSTP	J202–84
85	A_HDSTP	J202–85
86	A_LIMSWh	J202–86
87	HDSTP	J202–87
88	B_HDSTP	J202–88
89	B_HDSTP	J202–89
90	B_LIMSWh	J202–90
91	HDSTP	J202–91
92	C_HDSTP	J202–92
93	C_HDSTP	J202–93
94	C_LIMSWh	J202–94
95		J202–95
96	P24R	J202–96
97		J202–97
98		J202–98
99	+24FUSED	J202–99
100	SW1–	J202–100

REV 8

sch 2218878–100

EXTERNAL CONNECTORS DESCRIPTION (3/8)

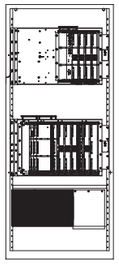

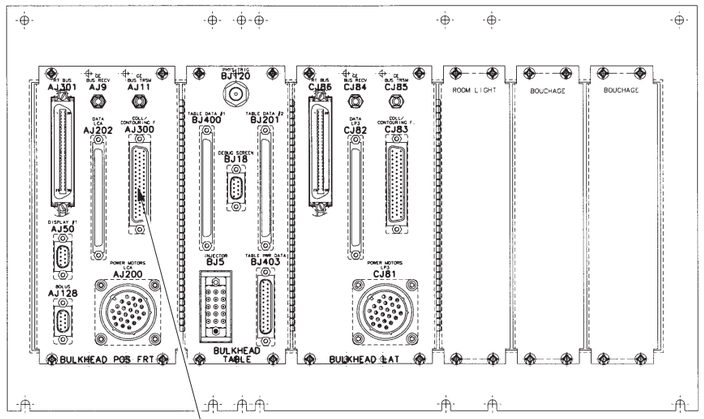

AJ300

AJ300 – COLL/CONTOURING F. (TO L–ARM: POS. CABINET COLL/C. FILTERS)

N	SIGNAL	MPOS BACKPLANE BOARD
1	FGA1	J18–1
2	GND	J18–2
3	ROTB1	J18–3
4	FDB1	J18–4
5	ROTATION 1	J18–5
6	GND	J18–6
7	ROTM1A	J18–7
8	ROTM2A	J18–8
9	OBL+1	J18–9
10	FILTER_P1	J18–10
11	GND	J18–11
12	GND	J18–12
13	P10 REF1_2	J18–13
14	P20V1	J18–14
15	GND	J18–15
16	M2VLONG1	J18–16
17	W11R1S1	J18–17
18	FGB1	J18–18
19	ROTA1	J18–19
20	FDA1	J18–20
21	GND	J18–21
22	CONTOUR_1	J18–22
23	GND	J18–23
24	FGM2A	J18–24
25	FDM1A	J18–25
26	OBL–1	J18–26
27	KEY1	J18–27
28	TUBE_SEL_1	J18–28
29	P1C1	J18–29
30	P2C1	J18–30
31	P3C1	J18–31
32	M1VLONG1	J18–32
33	M1VLAT1	J18–33
34	FG_INDEX_1	J18–34
35	FD_INDEX_1	J18–35
36	GND	J18–36
37	ROT_INDEX_1	J18–37
38	GND	J18–38
39	P5V1	J18–39
40	FGM1A	J18–40
41	FDM2A	J18–41
42		J18–42
43	F_LAMP_B1	J18–43
44	SAFETY_1	J18–44
45	P10 REF1_1	J18–45
46	P10V1	J18–46
47	P30V1	J18–47
48	P10 REF1_3	J18–48
49	M2V LAT1	J18–49
50	M21R1S1	J18–50

REV 8

sch 2218878–100

EXTERNAL CONNECTORS DESCRIPTION (7/8)

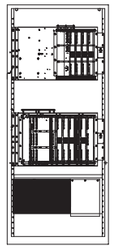

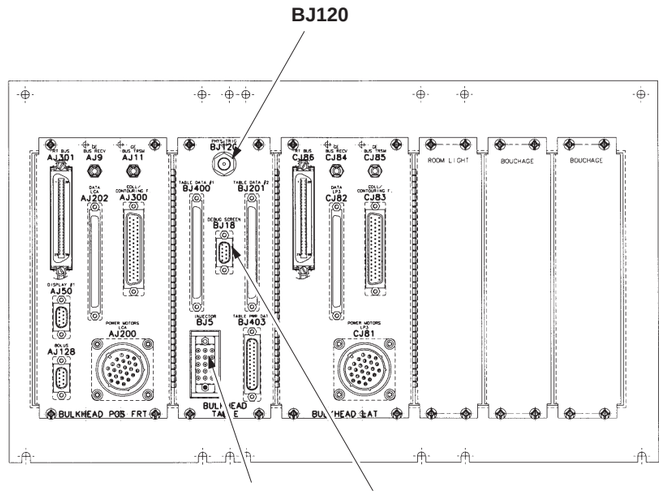

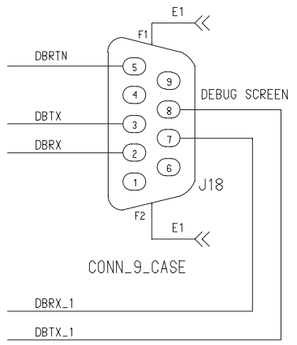

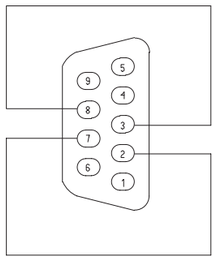

JUMPER PLUG 2226802 FOR BJ18

BJ5 – INJECTOR

N	SIGNAL	RELAY BOARD	VASCULAR I/O BOARD	TABLE BULKHEAD
1	P24VDC			
2	INJ PRESENT	J402–1	A3–J1B A8	BJ400–1
3	P24VDC			
4	INJ FC EXP TRIG	J402–14	A3–J1B A11	BJ400–2
5	INJ START	J402–16		BJ400–3
6	INJ START REF	J402–19		BJ400–6
7	INJ INHIBIT	J402–18		BJ400–5
8	INJ ARMED	J402–15	A3–J1B A9	BJ400–51
9	INJECTING	J402–2	A3–J1B A10	BJ400–52
10				
11				
12	P24VDC			
13	P24VDC			
14	INJ INHIBIT REF	J402–17		BJ400–4
15	GND			

BJ18 – DEBUG SCREEN

N	SIGNAL	FRONTAL LCA BACKPLANE BOARD
1		
2	DBRX	J18–2
3	DBTX	J18–3
4		
5	DBRTN	J18–5
6		
7	DBRX_1	J18–7
8	DBTX_1	J18–8
9		

BJ120 – PHYS TRIG

N	SIGNAL	RELAY BOARD	VASCULAR I/O BOARD
1	PHYS TRIG	J409–1	A3–J1B A20
2	PHYS TRIG RTN	J409–2/3/4/5	A3–J1B C20

REV 8

sch 2218878–100

EXTERNAL CONNECTORS DESCRIPTION (4/8)

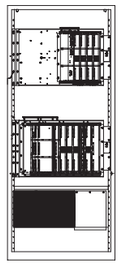

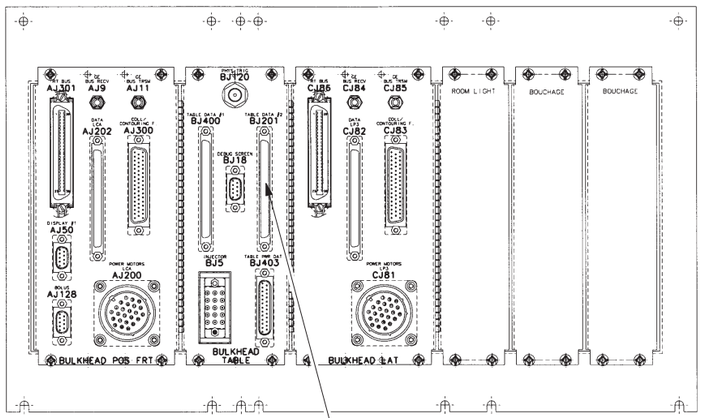

BJ201

BJ201 – TABLE DATA #2 (TO TABLE: POS–CABINET–DATA)

N	SIGNAL	FRONTAL LCA BACKPLANE BOARD
1	DBRX_1	J201–1
2	DBTX_1	J201–2
3	DBRTN	BJ18–5/J201–3/J18–5
4		
5		
6		
7		
8		
9		
10	TBL_TOP_STRP_EN1	J201–10
11		
12	REF_P10V	J201–12
13	REF_P10V	J201–13
14	REF_P10V	J201–14
15	REF_RTN_P10V	J201–15
16	REF_RTN_P10V	J201–16
17	REF_RTN_P10V	J201–17
18	TBL_HEIGHT_S1C	J201–18
19	UPENP	J201–19
20	DOWNENP	J201–20
21	LONG_S1C	J201–21
22	ROTATIONAL_CENTER	J201–22
23	ROTATIONAL_CENT_REF	J201–23
24	LATERAL_S1C	J201–24
25	TABTXDN	J201–25
26	LC_DIGITAL_GND	J201–26
27	RESTABN	J201–27
28	LC_DIGITAL_GND	J201–28
29	TBL_DRIVE_DOWN	J201–29
30	TBL_TOP_STPR_EN2	J201–30
31	P5VIS	J201–31
32		
33	P24_TBL	J201–33
34	P24_TBL	J201–34
35	P24_TBL	J201–35
36		
37	TBRXDN	J201–37
38	LC_DIGITAL_GND	J201–38
39	TBRXDP	J201–39
40	LC_DIGITAL_GND	J201–40
41	TBL_TOP_STPR_EN	J201–41
42	TBL_DRIVE_UP	J201–42
43	BUMP	J201–43/J204–52
44	RESTABP	J201–44
45	LC_DIGITAL_GND	J201–45
46	TBL_TOP_UP/DOWN_EN3	J201–46
47	TABTXDP	J201–47
48	LC_DIGITAL_GND	J201–48
49	EMERGENCY_STOPp	J201–49/J202–45/J204–40
50	EMERGENCY_STOPn	J201–50/J202–28

N	SIGNAL	FRONTAL LCA BACKPLANE BOARD
51		
52		
53		
54		
55		
56		
57		
58		
59		
60		
61		
62		
63	MACHINE_SW_A	J201–63
64	LATERAL_SW_A	J201–64
65	FRONTAL_SW_A	J201–65
66	AXIS_3_SIC_A_RTN	J201–66/J218–2
67	AXIS_3_SIC_A	J201–67/J218–1
68	AXIS_2_SIC_A_RTN	J201–68/J218–6
69	AXIS_2_SIC_A	J201–69/J218–5
70	AXIS_1_SIC_A_RTN	J201–70/J218–4
71	GND	J201–71
72	GND	J201–72/J218–3
73	AXIS_1_STC_A	J201–73
74	MACHINE_SW_B	J201–74
75	LATERAL_SW_B	J201–75
76	FRONTAL_SW_B	J201–76
77	AXIS_3_SIC_B_RTN	J201–77
78	AXIS_3_SIC_B	J201–78
79	AXIS_2_SIC_B_RTN	J201–79
80	AXIS_2_SIC_B	J201–80
81	AXIS_1_SIC_B_RTN	J201–81
82	AXIS_1_SIC_B	J201–82
83		
84	FRT/LAT_GANTRY_EN_REF	J201–84
85	HANDLE_CONFIG_SW	J201–85
86	MACHINE_LAMP	J201–86
87		
88	LATERAL_LAMP	J201–88
89	FRONTAL_LAMP	J201–89
90	TBL_TOP_UP/DOWN_EN2	J201–90
91		
92	FRT/LAT_GANTRY_EN	J201–92
93	RTB3_P	J201–93
94	RTB3_N	J201–94
95	RTB15_P	J201–95
96		
97	RTB15_N	J201–97
98	RTB9_P	J201–98
99		
100	RTB9_N	J201–100

REV 8

EXTERNAL CONNECTORS DESCRIPTION (5/8)

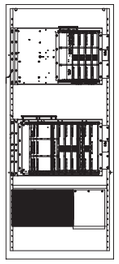

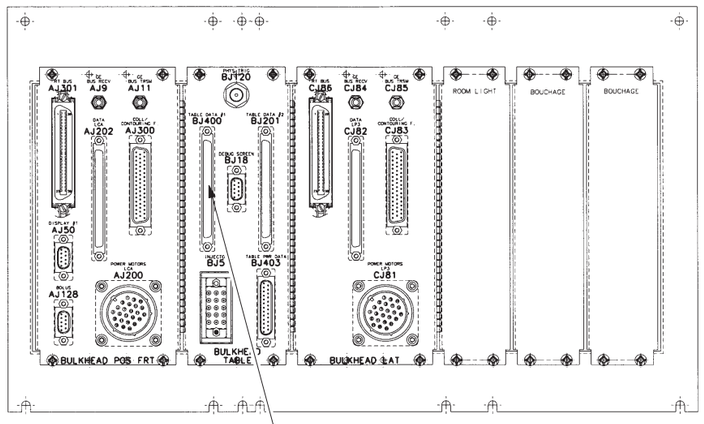

BJ400

sch 2218878–100

BJ400 – TABLE DATA #1 (TO TABLE: POS–CABINET–DATA)

N	SIGNAL	RELAY BOARD	TABLE BULKHEAD
1	INJ_PRESENT	J400–1/J402–1/A3J1B–A8	BJ5–2
2	INJ_FC_EXP_TRIG	J400–2/J402–14/A3J1B–A11	BJ5–4
3	INJ_START	J400–3/J402–16	BJ5–5
4	INJ_INHIBIT_REF	J400–4/J402–17	BJ5–14
5	INJ_INIBIT	J400–5/J402–18	BJ5–7
6	INJ_START_REF	J400–6/J402–19	BJ5–6
7			
8			
9			
10			
11			
12			
13			
14			
15			
16			
17			
18			
19			
20			
21			
22			
23			
24			
25			
26	GND	J400–26	
27			
28			
29			
30			
31			
32			
33			
34			
35			
36			
37			
38			
39			
40	VALID_STEPPER	J400–40	
41	TBL_TOP_STPR_EN1	J400–41	
42	P24V_TBL	J400–42	
43	SC1_LAT_DR_REQ	J400–43/A3J3B–A15	
44	SC1_FRTL_DR_REQ	J400–44/A3J3B–A14	
45	SC2_LAT_DR_REQ	J400–45/A3J3B–B15	
46	SC2_FRTL_DR_REQ	J400–46/A3J3B–B14	
47			
48		J400–48	
49	SC1_TBL_TOP_EN	J400–49	
50	TBL_TOP_UP/DOWN_EN2	J400–50	
51	INJ_ARMED	J400–51/J402–15/A3J1B–A9	BJ5–8
52	INJECTING	J400–52/J402–2/A3J1B–A10	BJ5–9
53	HARD_RESET_A–P	J400–53/A3J3B–B16	
54	HARD_RESET_A–N	J400–54/A3J3B–B17	
55	LMP_DATA_A–P	J400–55/A3J3B–C16	
56	LMP_DATA_A_N	J400–56/A3J3B–C17	
57	SW_DATA_A_P	J400–57/A3J3B–A16	
58	SW_DATA_A_N	J400–58/A3J3B–A17	
59	HARD_RESET_B_P	J400–59/A3J3B–A18	
60	HARD_RESET_B_N	J400–60/A3J3B–A19	
61	LMP_DATA_B_P	J400–61/A3J3B–C18	
62	LMP_DATA_B_N	J400–62/A3J3B–C19	
63	SW_DATA_B_P	J400–63/A3J3B–B18	
64	SW_DATA_B_N	J400–64/A3J3B–B19	
65	HARD_RESET_C_P	J400–65/A3J3B–B20	
66	HARD_RESET_C_N	J400–66/A3J3B–B21	
67	LMP_DATA_C_P	J400–67/A3J3B–C20	
68	LMP_DATA_C_N	J400–68/A3J3B–C21	
69	SW_DATA_C_P	J400–69/A3J3B–A20	
70	SW_DATA_C_N	J400–70/A3J3B–A21	
71		J400–71/A3J3B–C14	
72	AUTOPOS_DR_REQ	J400–72/A3J3B–C15	
73	HARD_RESET_E–N	J400–73/A3J3B–C29	
74	HARD_RESET_E–P	J400–74/A3J3B–C28	
75	RXD_E_N	J400–75/A3J3B–A22	
76	RXD_E_P	J400–76/A3J3B–B22	
77	TXD_E_N	J400–77/A3J3B–B29	
78	TXD_E_P	J400–78/A3J3B–B28	
79		J400–79/A3J3B–C2	
80		J400–80/A3J3B–C3	
81			
82			
83			
84			
85		J400–85/A3J3B–C9	
86		J400–86/A3J1B–C10	
87		J400–87/A3J3B–A9	
88		J400–88/A3J1B–C8	
89		J400–89/A3J3B–B3	
90		J400–90/A3J3B–B2	
91		J400–91/A3J3B–B9	
92		J400–92/A3J1B–C9	
93		J400–93/A3J3B–A4/A3J3B–B4/A3J3B–C4	
94		J400–94/A3J3B–A1/A3J3B–B1/A3J3B–C1	
95	REC_EXP_FT_SW	J400–95/J411–A19/A3J1B–A13	
96	P24DC	J400–96/J402–22/J402–23/J402–24/ J402–25/J403–1/J403–2/J403–14/ A3J1B–A27/A3J1B–B27/A3J1B–C27	
97	FL_EXP_FT_SW	J400–97/J411–C19/A3J1B–A14	
98	EXP_REQ_3	J400–98/A3J1B–A15	
99	EXP_REQ_3_LAT	J400–99/J411–A20	
100	REC_PREP_FT_SW	J400–100/J411–C20/A3J1B–C13	

REV 8

sch 2218878–100

EXTERNAL CONNECTORS DESCRIPTION (6/8)

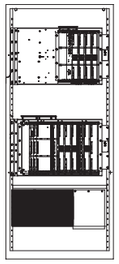

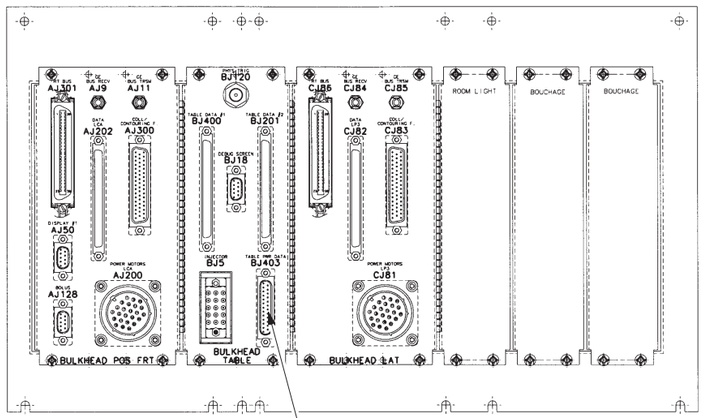

BJ403

BJ403 – TABLE PWR DATA (TO TABLE: POS–CABINET–PWR)

N	SIGNAL	RELAY BOARD	FRONTAL LCA BACKPLANE BOARD	TABLE BULKHEAD
1	P24VDC	J402–22/J402–23/J402–24/J402–25/J403–1/ A3J1B–A27/A3J1B–B27/A3J1B–C27		BJ5–1/BJ5–3/BJ5–12/ BJ5–13/BJ400–96
2	P24VDC	J402–22/J402–23/J402–24/J402–25/J403–2/ A3J1B–A27/A3J1B–B27/A3J1B–C27		BJ5–1/BJ5–3/BJ5–12/ BJ5–13/BJ400–96
3	GND	J403–3/J408–2		
4	GND	J403–4/J408–2		
5	GND	J401–1/J401–3/J403–5		
6	GND	J401–1/J401–3/J403–6		
7	P24V_RTN	J403–7/A3J1B–A28/A3J1B–B28/A3J1B–C28		
8	P24V_RTN	J403–8/A3J1B–A28/A3J1B–B28/A3J1B–C28		
9	UNREGP12V	J401–2/J403–9		
10	UNREGP12V	J401–2/J403–10		
11	UNREGP5V	J401–6/J403–11		
12	P15SMT	J403–12/J405–15/J405–16/J405–17/J405–18	J214–15/J214–16/ J214–17/J214–18	
13	P15SMT	J403–13/J405–15/J405–16/J405–17/J405–18	J214–15/J214–16/ J214–17/J214–18	
14	P24VDC	J402–22/J402–23/J402–24/J402–25/J403–14/ A3J1B–A27/A3J1B–B27/A3J1B–C27		BJ5–1/BJ5–3/BJ5–12/ BJ5–13/BJ400–96
15				
16	GND	J403–16/J408–2		
17	GND	J401–1/J401–3/J403–17		
18	GND	J401–1/J401–3/J403–18		
19	GND	J401–1/J401–3/J403–19		
20	P24V_RTN	J403–20/A3J1B–A28/A3J1B–B28/A3J1B–C28		
21				
22	UNREGP12V	J401–2/J403–22		
23	UNREGP5V	J401–6/J403–23		
24	UNREGP5V	J401–6/J403–24		
25	P15SMT	J403–25/J405–15/J405–16/J405–17/J405–18	J214–15/J214–16/ J214–17/J214–18	

REV 8

EXTERNAL CONNECTORS DESCRIPTION (8/8)

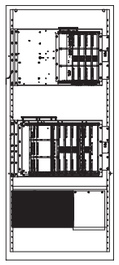

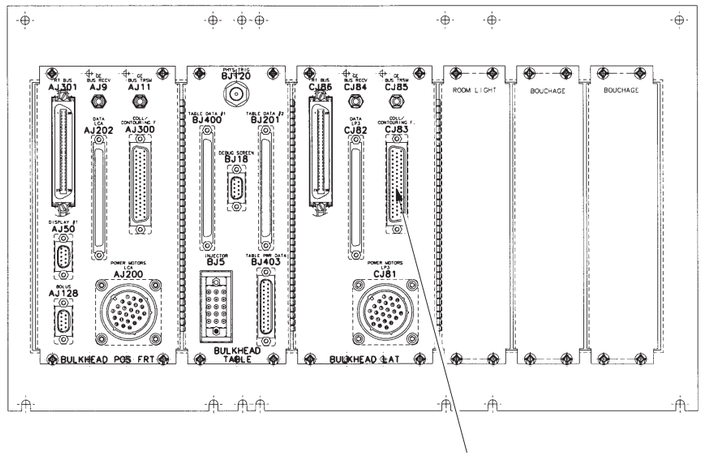

CJ83

sch 2218878–100

CJ83 – COLL/CONTOURING F.

N	SIGNAL	MPOS BACKPLANE BOARD
1	FGA1	J19–1
2	GND	J19–2
3	ROTB1	J19–3
4	FDB1	J19–4
5	ROTATION 1	J19–5
6	GND	J19–6
7	ROTM1A	J19–7
8	ROTM2A	J19–8
9	OBL+1	J19–9
10	FILTER_P1	J19–10
11	GND	J19–11
12	GND	J19–12
13	P10 REF1_2	J19–13
14	P20V1	J19–14
15	GND	J19–15
16	M2VLONG1	J19–16
17	W11R1S1	J19–17
18	FGB1	J19–18
19	ROTA1	J19–19
20	FDA1	J19–20
21	GND	J19–21
22	CONTOUR_1	J19–22
23	GND	J19–23
24	FGM2A	J19–24
25	FDM1A	J19–25
26	OBL–1	J19–26
27	KEY1	J19–27
28	TUBE_SEL_1	J19–28
29	P1C1	J19–29
30	P2C1	J19–30
31	P3C1	J19–31
32	M1VLONG1	J19–32
33	M1VLAT1	J19–33
34	FG_INDEX_1	J19–34
35	FD_INDEX_1	J19–35
36	GND	J19–36
37	ROT_INDEX_1	J19–37
38	GND	J19–38
39	P5V1	J19–39
40	FGM1A	J19–40
41	FDM2A	J19–41
42		J19–42
43	F_LAMP_B1	J19–43
44	SAFETY_1	J19–44
45	P10 REF1_1	J19–45
46	P10V1	J19–46
47	P30V1	J19–47
48	P10 REF1_3	J19–48
49	M2V LAT1	J19–49
50	M21R1S1	J19–50

2. FRONTAL POSITIONER RACK

TITLE	SINGLE PLANE	BIPLANE	DRAWING NUMBER	PAGE NUMBER
Backplane MODPOS Component Layout	X	X	2225632 ADW	2–3
Backplane MODPOS Circuit Diagram (1/8 to 8/8)	X	X	2225632 SCH	2–4 TO 2–11
Backplane MODPOS Component Layout	X	X	2238228 ADW	2–13
Backplane MODPOS Circuit Diagram (1/8 to 8/8)	X	X	2238228 SCH	2–14 TO 2–21
CPU/BIU Board Component Layout	X	X	46-321384G1	2–23
CPU/BIU Board Circuit Diagram (1/23 to 23/23)	X	X	46-321384S	2–24 TO 2–46
Vascular I/O Board Component Layout	X	X	46-264458G1	2–47
Vascular I/O Board Circuit Diagram (1/11 to 11/11)	X	X	46-264458S	2–48 TO 2–58
Collimator Command Board Component Layout	X	X	2244231 ADW	2–59
Collimator Command Board Circuit Diagram (1/8 to 8/8)	X	X	2244231 SCH	2–60 TO 2–67
Biplane I/F Board Component Layout		X	46–264856	2–69
Biplane I/F Board Circuit Diagram (1/4 to 4/4)		X	46–264856	2–70 TO 2–73
Bus Interface Unit Board Component Layout		X	46–226968	2–75
Bus Interface Unit Board Circuit Diagram (1/6 to 6/6)		X	46–226968	2–76 TO 2–81
Relay Board Component Layout (1/4 to 3/4 only)	X	X	2253722 ADW	2–83 TO 2–85
Relay Board Circuit Diagram (1/11 to 11/11)	X	X	2253722 SCH	2–86 TO 2–96
Backplane LCA Board Component Layout (1/2 only)	X	X	2253100 ADW	2–97
Backplane LCA Board Circuit Diagram (1/9 to 9/9)	X	X	2253100 SCH	2–98 TO 2–106
Backplane LCA Board Component Layout	X	X	2225630 ADW	2–107
Backplane LCA Board Circuit Diagram (1/8 to 8/8)	X	X	2225630 SCH	2–108 TO 2–115
System Controller Processor:	X	X	2247665 ADW	2–117
CPU68040 I/O Single/Biplane Adaptor Board Component Layout	X	X	2247665 ADW	2–117
CPU68040 I/O Single/Biplane Adaptor Board Circuit Diagram (1/6 to 6/6)	X	X	2247665 SCH	2–118 TO 2–123
or CPU Roadrunner V2 Board Component Layout	X	X	2289661–4 ADW	2–125
CPU Roadrunner V2 Circuit Diagram (1/18 to 18/18)	X	X	2289661–4 SCH	2–126 TO 2–143
Smart Amplifier Board Component Layout	X	X	2211384 ADW	2–145
Smart Amplifier Board Circuit Diagram (1/8 to 8/8)	X	X	2211384 SCH	2–146 TO 2–153
Smart Amplifier Board Circuit Diagram	X	X	2283120 SCH	2–135 TO 2–141
System Interface Board Component Layout	X	X	2267936 ADW	2–167
System Interface Board Diagram (1/12 to 12/12)	X	X	2267936 SCH	2–168 TO 2–179
CPU Display LP/LC		X	45–259470 SCH	2–181 AND 2–182
PCB Display LP/LC		X	2164432 SCH	2–183 TO 2–188
CPU Display LP/LC	X		2236103 SCH	2–189 AND 2–190
PCB Display LP/LC	X		45–259469 SCH	2–191 TO 2–194

Blank page.

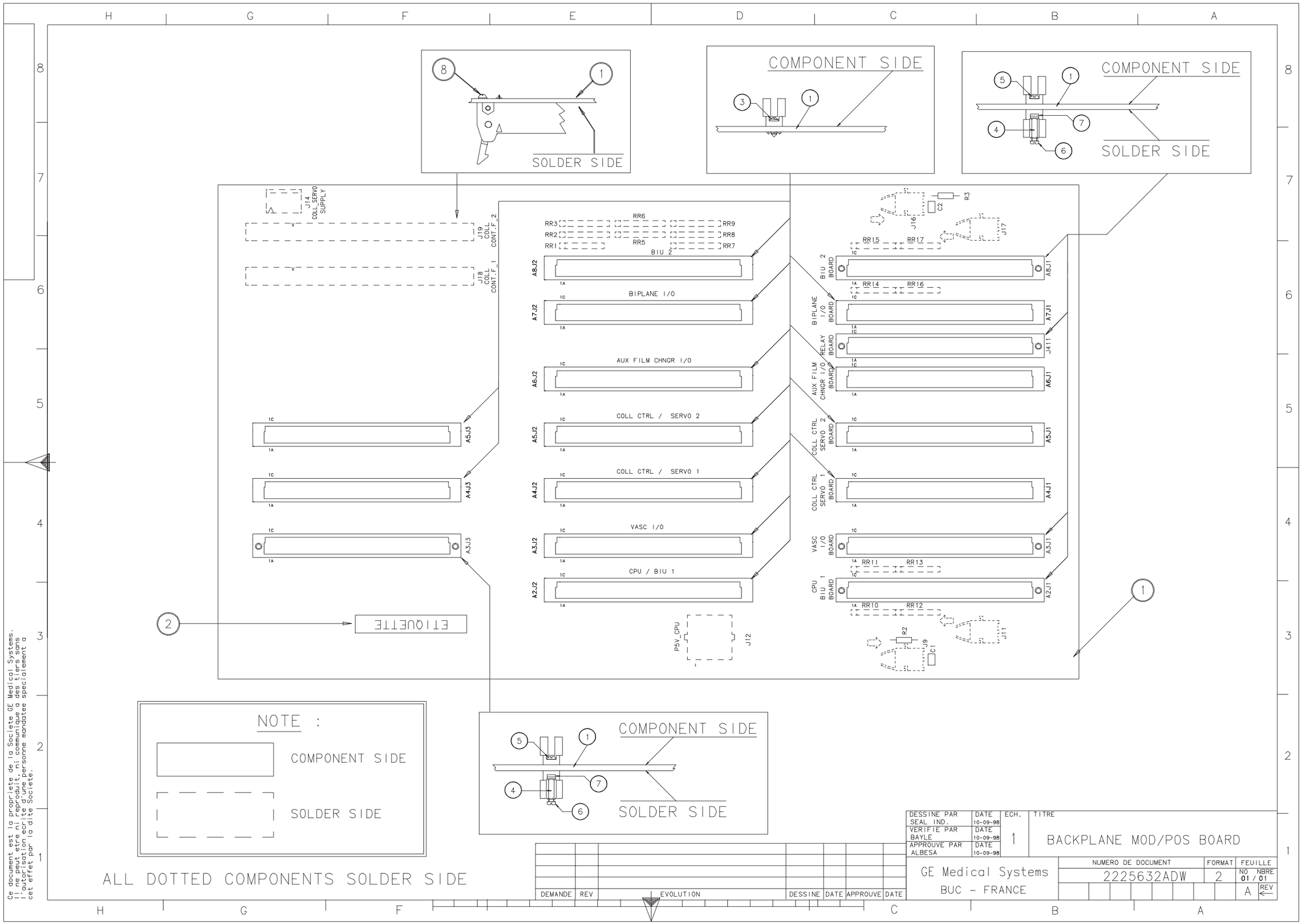
SOLDER SIDE
COMPONENT SIDE
COMPONENT SIDE
SOLDER SIDE
J14 COLL_SERVO SUPPLY
J19 COLL CONT.F_2
J18 COLL CONT.F_1
RR6
RR3
RR9
RR2
RR8
RR5
RR1
RR7
BIU 2
A8J2
BIPLANE I/O
A7J2
AUX FILM CHNGR I/O
A6J2
COLL CTRL / SERVO 2
A5J2
COLL CTRL / SERVO 1
A4J2
VASC I/O
A3J2
CPU / BIU 1
A2J2
P5V_CPU
J12
R3
C2
J16
J17
RR15
RR17
BIU 2 BOARD
A8J1
RR14
RR16
BIPLANE I/O BOARD
A7J1
RELAY BOARD
J411
AUX FILM CHNGR I/O BOARD
A6J1
COLL CTRL SERVO 2 BOARD
A5J1
COLL CTRL SERVO 1 BOARD
A4J1
VASC I/O BOARD
A3J1
RR11
RR13
CPU BIU 1 BOARD
A2J1
RR10
RR12
R2
J9
C1
J11
A5J3
A4J3
A3J3
ETIQUETTE
NOTE :
COMPONENT SIDE
SOLDER SIDE
ALL DOTTED COMPONENTS SOLDER SIDE
COMPONENT SIDE
SOLDER SIDE
DESSINE PAR SEAL IND.
DATE 10-09-98
VERIFIE PAR BAYLE
DATE 10-09-98
APPROUVE PAR ALBESA
DATE 10-09-98
ECH. 1
TITRE
BACKPLANE MOD/POS BOARD
GE Medical Systems
BUC - FRANCE
NUMERO DE DOCUMENT
2225632ADW
FORMAT 2
FEUILLE NO 01 / 01
REV A
DEMANDE REV EVOLUTION DESSINE DATE APPROUVE DATE
Ce document est la propriete de la Societe GE Medical Systems.
Il ne peut etre ni reproduit, ni communique a des tiers sans
l'autorisation ecrite d'une personne mandatee specialement a
cet effet par la dite Societe.

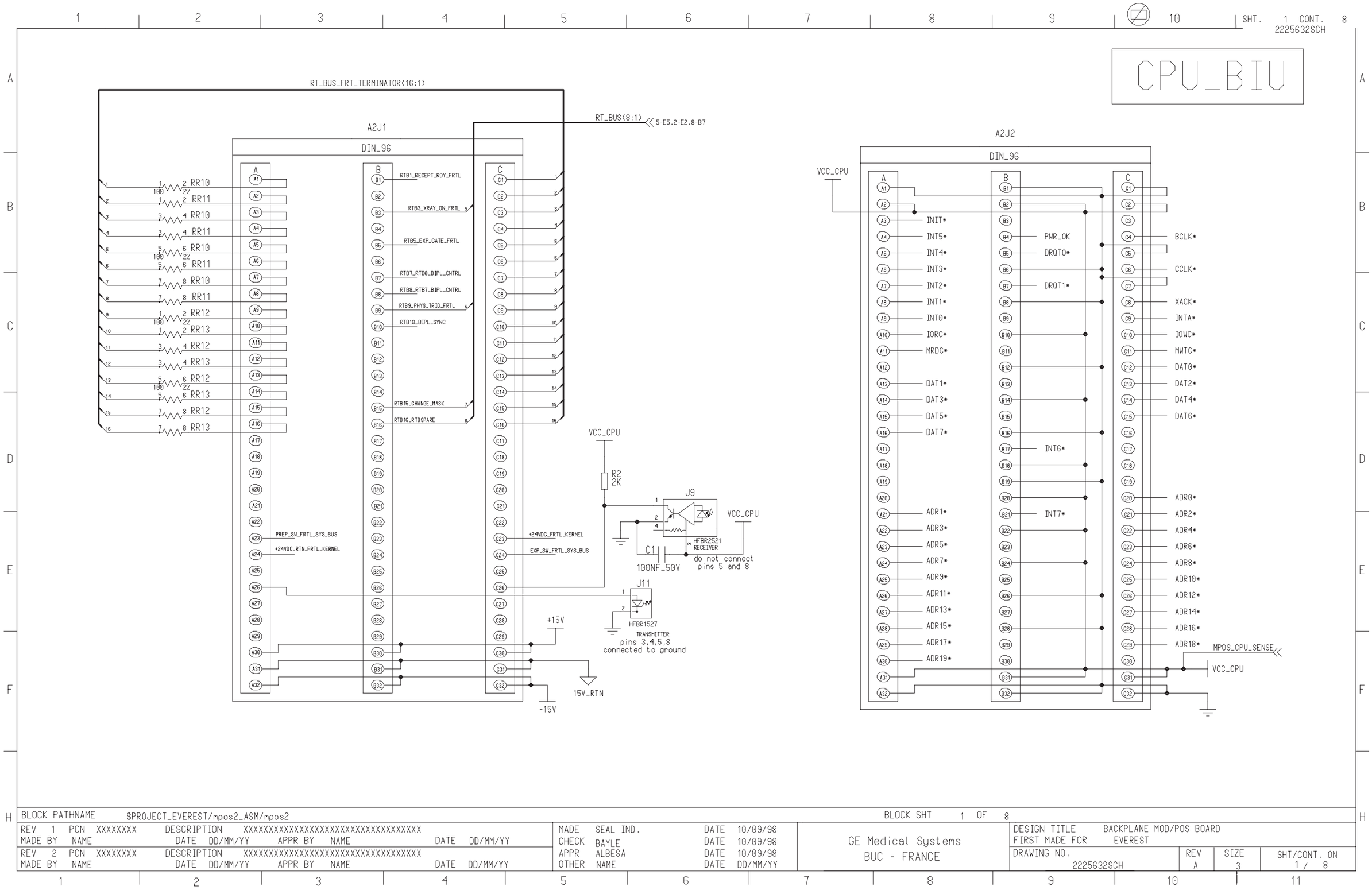
SHT. 1 CONT. 8
2225632SCH
CPU_BIU
RT_BUS_FRT_TERMINATOR(16:1)
RT_BUS(8:1)
5-E5,2-E2,8-B7
A2J1
DIN_96
A2J2
DIN_96
VCC_CPU
RTB1_RECEPT_RDY_FRTL
RTB3_XRAY_ON_FRTL
RTB5_EXP_GATE_FRTL
RTB7_RTB8_BIPL_CNTRL
RTB8_RTB7_BIPL_CNTRL
RTB9_PHYS_TRIG_FRTL
RTB10_BIPL_SYNC
RTB15_CHANGE_MASK
RTB16_RTBSPARE
PREP_SW_FRTL_SYS_BUS
+24VDC_RTN_FRTL_KERNEL
+24VDC_FRTL_KERNEL
EXP_SW_FRTL_SYS_BUS
R2
2K
J9
HFBR2521
RECEIVER
C1
100NF_50V
do not connect
pins 5 and 8
J11
HFBR1527
TRANSMITTER
pins 3,4,5,8
connected to ground
+15V
15V_RTN
-15V
INIT*
INT5*
INT4*
INT3*
INT2*
INT1*
INT0*
IORC*
MRDC*
DAT1*
DAT3*
DAT5*
DAT7*
ADR1*
ADR3*
ADR5*
ADR7*
ADR9*
ADR11*
ADR13*
ADR15*
ADR17*
ADR19*
PWR_OK
DRQT0*
DRQT1*
INT6*
INT7*
BCLK*
CCLK*
XACK*
INTA*
IOWC*
MWTC*
DAT0*
DAT2*
DAT4*
DAT6*
ADR0*
ADR2*
ADR4*
ADR6*
ADR8*
ADR10*
ADR12*
ADR14*
ADR16*
ADR18*
MPOS_CPU_SENSE
BLOCK PATHNAME $PROJECT_EVEREST/mpos2_ASM/mpos2
BLOCK SHT 1 OF 8
REV 1 PCN XXXXXXXX DESCRIPTION XXXXXXXXXXXXXXXXXXXXXXXXXXXXXXXXXXXX
MADE BY NAME DATE DD/MM/YY APPR BY NAME DATE DD/MM/YY
REV 2 PCN XXXXXXXX DESCRIPTION XXXXXXXXXXXXXXXXXXXXXXXXXXXXXXXXXXXX
MADE BY NAME DATE DD/MM/YY APPR BY NAME DATE DD/MM/YY
MADE SEAL IND. DATE 10/09/98
CHECK BAYLE DATE 10/09/98
APPR ALBESA DATE 10/09/98
OTHER NAME DATE DD/MM/YY
GE Medical Systems
BUC - FRANCE
DESIGN TITLE BACKPLANE MOD/POS BOARD
FIRST MADE FOR EVEREST
DRAWING NO. 2225632SCH
REV A
SIZE 3
SHT/CONT. ON 1 / 8

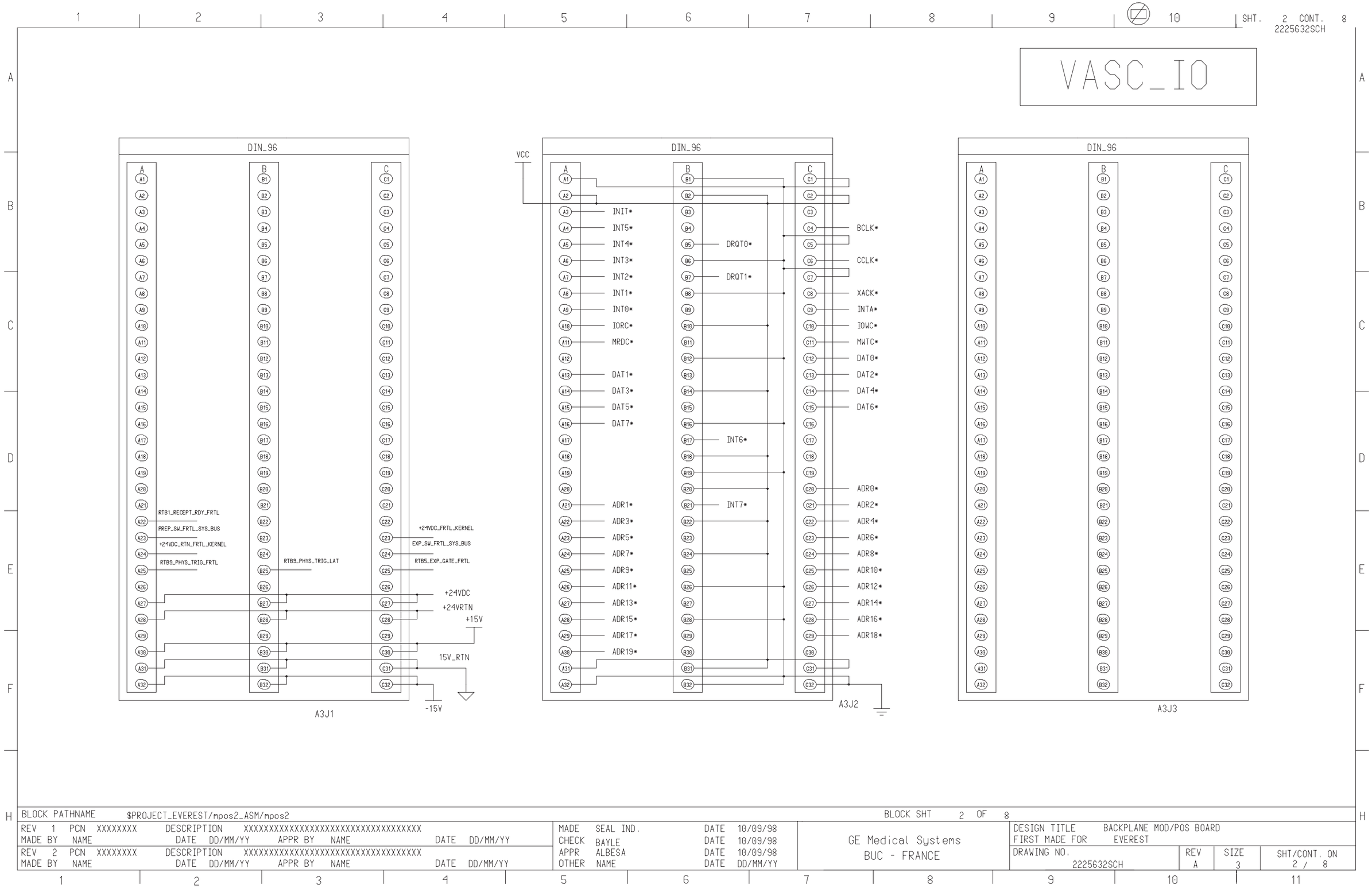

FRONTAL POSITIONER RACK

SHT. 3 CONT. 8
2225632SCH

COLL_CTRL_SERVO#1

8-A1 >> COLL_1(50:1)

A4J1

DIN_96

15V_RTN

+24VDC
+24VRTN
+15V
15V_RTN
-15V

A4J2

DIN_96

VCC

INIT*
INT5*
INT4*
INT3*
INT2*
INT1*
INT0*
IORC*
MRDC*
DAT1*
DAT3*
DAT5*
DAT7*
ADR1*
ADR3*
ADR5*
ADR7*
ADR9*
ADR11*
ADR13*
ADR15*
ADR17*
ADR19*

DRQT0*
DRQT1*
INT6*
INT7*

BCLK*
CCLK*
XACK*
INTA*
IOWC*
MWTC*
DAT0*
DAT2*
DAT4*
DAT6*
ADR0*
ADR2*
ADR4*
ADR6*
ADR8*
ADR10*
ADR12*
ADR14*
ADR16*
ADR18*

A4J3

DIN_96

COLL_TRANS_MTR_LO#1
COLL_TRANS_MTR_HI#1
COLL_SERVO_PS_RTN
COLL_SERVO_PS_+VDC
COLL_SERVO_PS_-VDC
COLL_LONG_MTR_HI#1
COLL_LONG_MTR_LO#1

J14

BLOCK PATHNAME	$PROJECT_EVEREST/mpos2_ASM/mpos2		BLOCK SHT 3 OF 8
REV 1 PCN XXXXXXXX DESCRIPTION XXXXXXXXXXXXXXXXXXXXXXXXXXXXXXXXXX MADE BY NAME DATE DD/MM/YY APPR BY NAME DATE DD/MM/YY	MADE SEAL IND. DATE 10/09/98 CHECK BAYLE DATE 10/09/98 APPR ALBESA DATE 10/09/98 OTHER NAME DATE DD/MM/YY	GE Medical Systems BUC - FRANCE	DESIGN TITLE BACKPLANE MOD/POS BOARD FIRST MADE FOR EVEREST
REV 2 PCN XXXXXXXX DESCRIPTION XXXXXXXXXXXXXXXXXXXXXXXXXXXXXXXXXX MADE BY NAME DATE DD/MM/YY APPR BY NAME DATE DD/MM/YY			DRAWING NO. 2225632SCH / REV A / SIZE 3 / SHT/CONT. ON 3 / 8

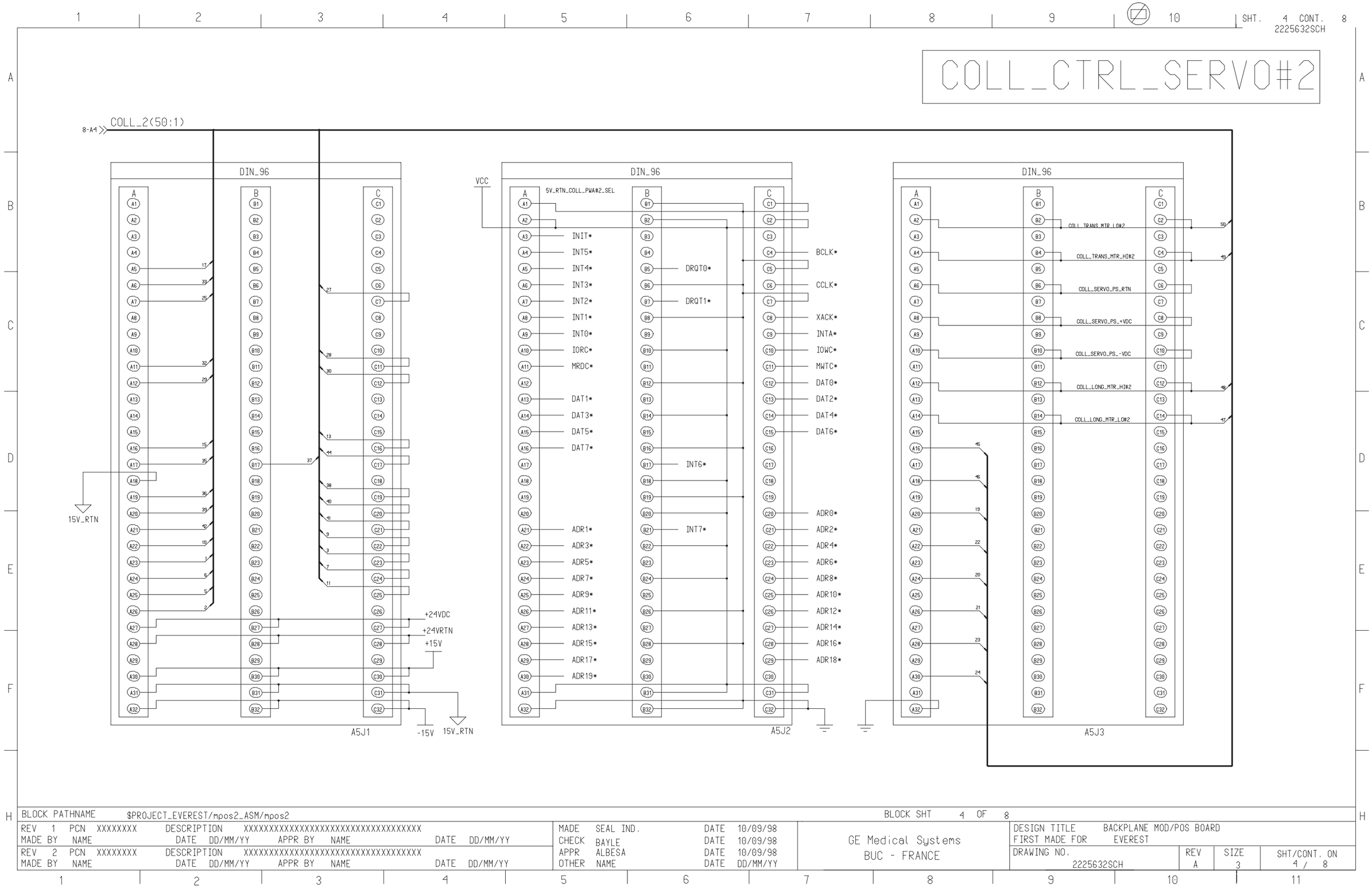

FRONTAL POSITIONER RACK

SHT. 5 CONT. 8
2225632SCH

AUX_FILM_CHNGR_IO

RELAY(52:1)

FIX1 FIX2 FIX3 FIX4
FIX5 FIX6 FIX7 FIX8
FIX9 FIX10 FIX11 FIX12
FIX13 FIX14 FIX15 FIX16

DIN_96 — A6J1

+24VRTN
+24VRTN
RTB1_RECEPT_RDY_FRTL
RTB3_XRAY_ON_FRTL
RTB5_EXP_GATE_FRTL
+24VDC
+24VRTN
+15V
-15V
15V_RTN

DIN_96 — A6J2

VCC
INIT*
INT5*
INT4*
INT3*
INT2*
INT1*
INT0*
IORC*
MRDC*
DAT1*
DAT3*
DAT5*
DAT7*
ADR1*
ADR3*
ADR5*
ADR7*
ADR9*
ADR11*
ADR13*
ADR15*
ADR17*
ADR19*
DRQT0*
DRQT1*
INT6*
INT7*
BCLK*
CCLK*
XACK*
INTA*
IOWC*
MWTC*
DAT0*
DAT2*
DAT4*
DAT6*
ADR0*
ADR2*
ADR4*
ADR6*
ADR8*
ADR10*
ADR12*
ADR14*
ADR16*
ADR18*

BLOCK PATHNAME $PROJECT_EVEREST/mpos2_ASM/mpos2								BLOCK SHT 5 OF 8				
REV 1 PCN XXXXXXXX DESCRIPTION XXXXXXXXXXXXXXXXXXXXXXXXXXXXXXXXXX MADE BY NAME DATE DD/MM/YY APPR BY NAME DATE DD/MM/YY				MADE SEAL IND. DATE 10/09/98 CHECK BAYLE DATE 10/09/98 APPR ALBESA DATE 10/09/98 OTHER NAME DATE DD/MM/YY		GE Medical Systems BUC - FRANCE		DESIGN TITLE BACKPLANE MOD/POS BOARD FIRST MADE FOR EVEREST				
REV 2 PCN XXXXXXXX DESCRIPTION XXXXXXXXXXXXXXXXXXXXXXXXXXXXXXXXXX MADE BY NAME DATE DD/MM/YY APPR BY NAME DATE DD/MM/YY								DRAWING NO. 2225632SCH		REV A	SIZE 3	SHT/CONT. ON 5 / 8

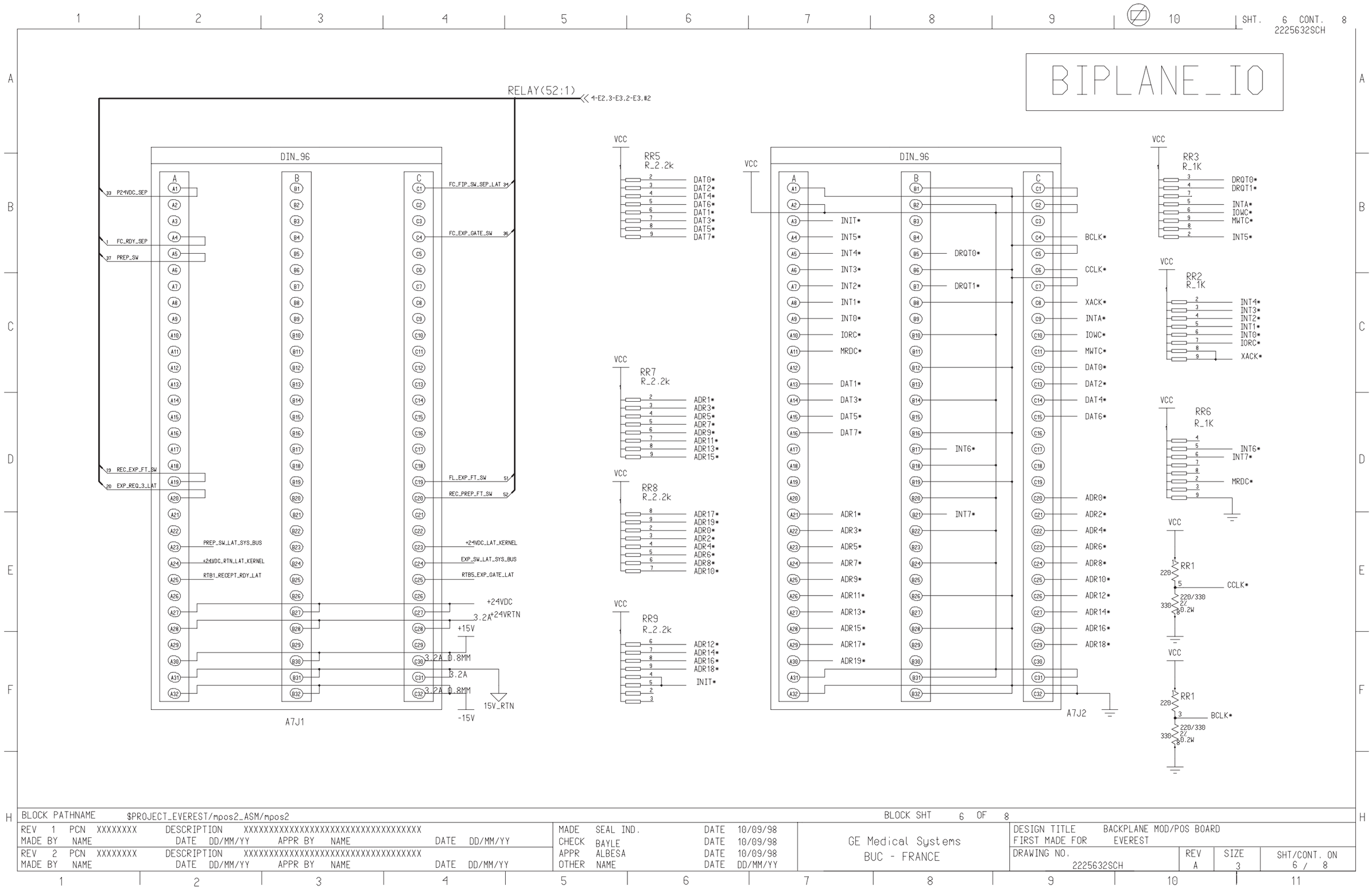

FRONTAL POSITIONER RACK

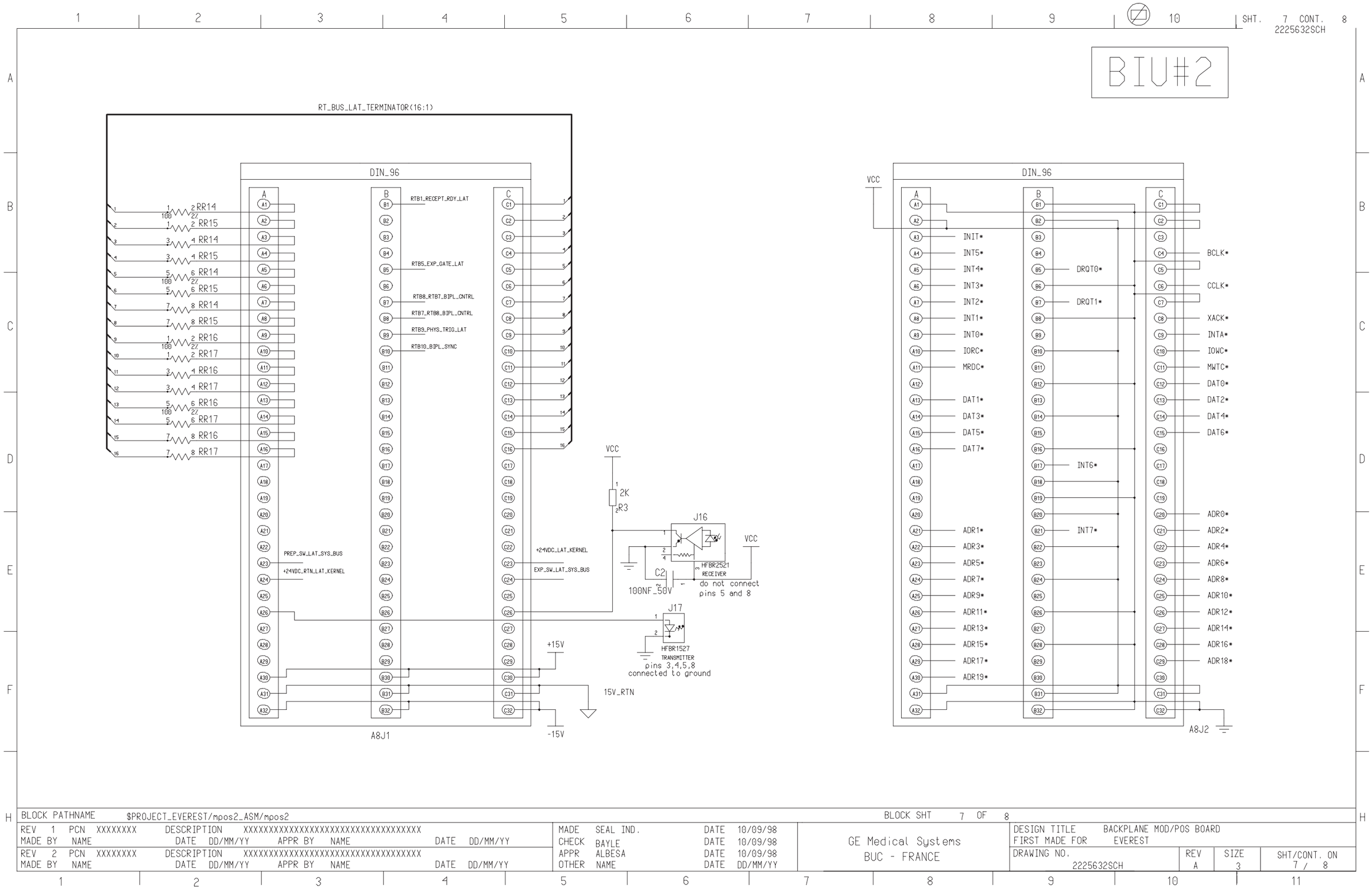

BLOCK PATHNAME $PROJECT_EVEREST/mpos2_ASM/mpos2				BLOCK SHT 7 OF 8		
REV 1 PCN XXXXXXXX DESCRIPTION XXXXXXXXXXXXXXXXXXXXXXXXXXXXXXXX MADE BY NAME DATE DD/MM/YY APPR BY NAME DATE DD/MM/YY	MADE SEAL IND. DATE 10/09/98 CHECK BAYLE DATE 10/09/98 APPR ALBESA DATE 10/09/98 OTHER NAME DATE DD/MM/YY	GE Medical Systems BUC - FRANCE	DESIGN TITLE BACKPLANE MOD/POS BOARD FIRST MADE FOR EVEREST			
REV 2 PCN XXXXXXXX DESCRIPTION XXXXXXXXXXXXXXXXXXXXXXXXXXXXXXXX MADE BY NAME DATE DD/MM/YY APPR BY NAME DATE DD/MM/YY			DRAWING NO. 2225632SCH	REV A	SIZE 3	SHT/CONT. ON 7 / 8

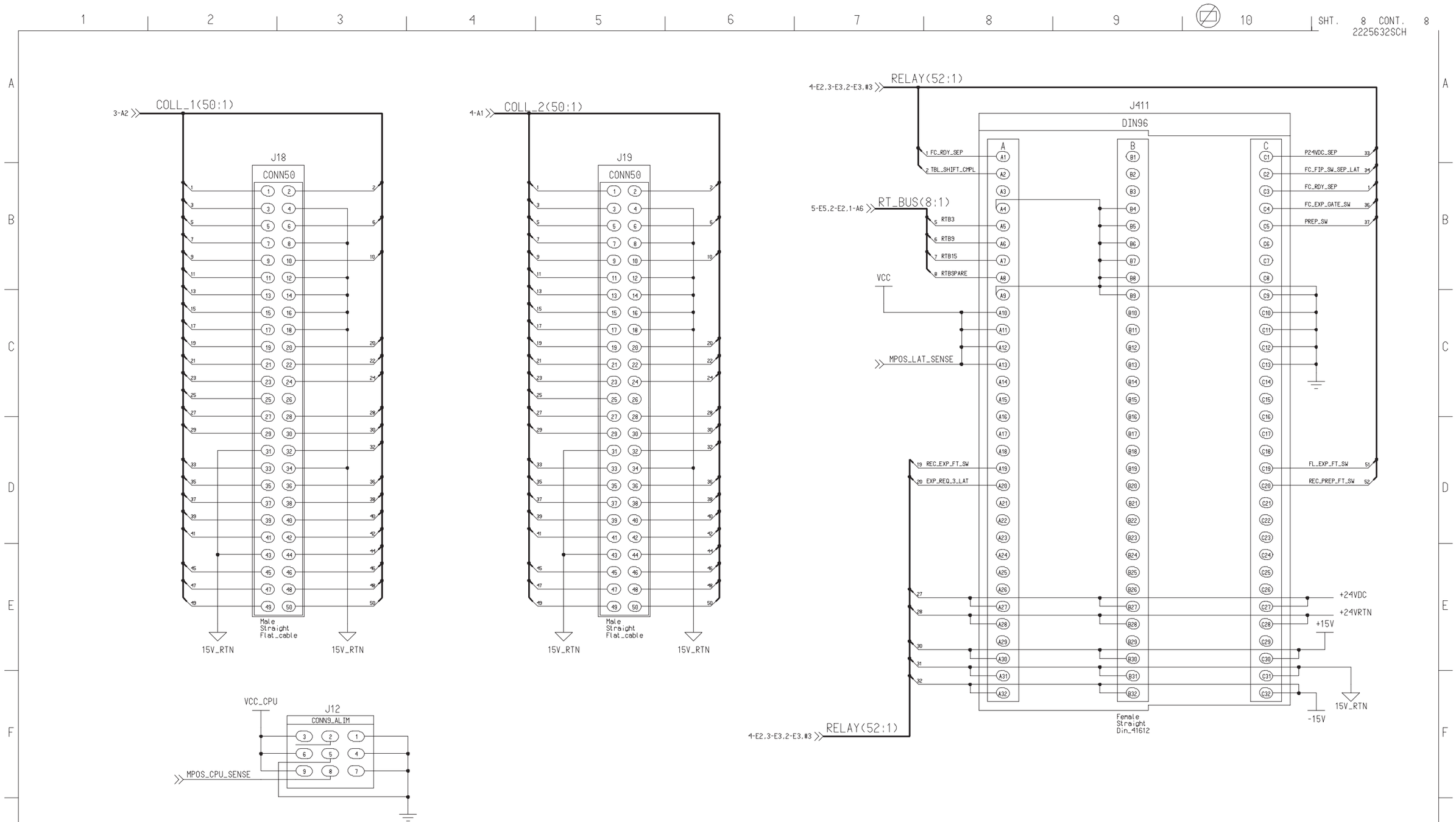

BLOCK PATHNAME $PROJECT_EVEREST/mpos2_ASM/mpos2				BLOCK SHT 8 OF 8		
REV 1 PCN XXXXXXXX DESCRIPTION XXXXXXXXXXXXXXXXXXXXXXXXXXXXXXXXXX MADE BY NAME DATE DD/MM/YY APPR BY NAME DATE DD/MM/YY	MADE SEAL IND. DATE 10/09/98 CHECK BAYLE DATE 10/09/98 APPR ALBESA DATE 10/09/98 OTHER NAME DATE DD/MM/YY	GE Medical Systems BUC - FRANCE	DESIGN TITLE BACKPLANE MOD/POS BOARD FIRST MADE FOR EVEREST			
REV 2 PCN XXXXXXXX DESCRIPTION XXXXXXXXXXXXXXXXXXXXXXXXXXXXXXXXXX MADE BY NAME DATE DD/MM/YY APPR BY NAME DATE DD/MM/YY			DRAWING NO. 2225632SCH	REV A	SIZE 3	SHT/CONT. ON 8 / 8

Blank page.

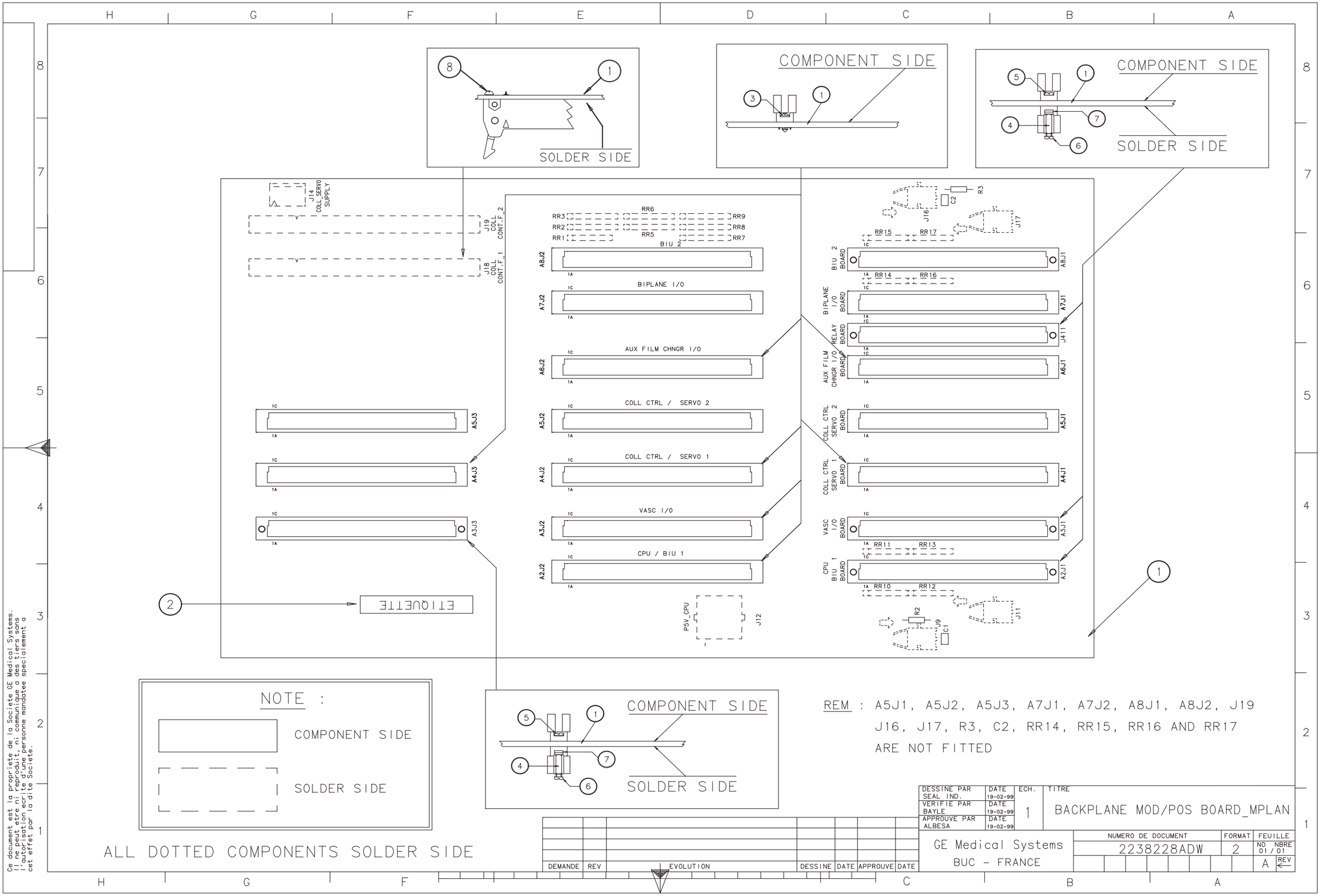

Ce document est la propriete de la Societe GE Medical Systems.
Il ne peut etre ni reproduit, ni communique a des tiers sans
l'autorisation ecrite d'une personne mandatee specialement a
cet effet par la dite Societe.

SHT. 1 CONT. 8
2238228SCH

CPU_BIU

RT_BUS_FRT_TERMINATOR(16:1)

A2J1

DIN_96

RT_BUS(8:1) << 5-E5,2-E2,8-B7

RR10 RR11 RR10 RR11 RR10 RR11 RR12 RR13 RR12 RR13 RR12 RR13

RTB1_RECEPT_RDY_FRTL
RTB3_XRAY_ON_FRTL
RTB5_EXP_GATE_FRTL
RTB7_RTB8_BIPL_CNTRL
RTB8_RTB7_BIPL_CNTRL
RTB9_PHYS_TRIG_FRTL
RTB10_BIPL_SYNC
RTB15_CHANGE_MASK
RTB16_RTBSPARE

PREP_SW_FRTL_SYS_BUS
+24VDC_RTN_FRTL_KERNEL
+24VDC_FRTL_KERNEL
EXP_SW_FRTL_SYS_BUS

VCC_CPU
R2 2K
J9
HFBR2521 RECEIVER
C1 100NF_50V
do not connect pins 5 and 8
J11
HFBR1527 TRANSMITTER
pins 3,4,5,8 connected to ground
+15V
15V_RTN
-15V

A2J2

DIN_96

VCC_CPU

INIT* INT5* INT4* INT3* INT2* INT1* INT0* IORC* MRDC*
DAT1* DAT3* DAT5* DAT7*
ADR1* ADR3* ADR5* ADR7* ADR9* ADR11* ADR13* ADR15* ADR17* ADR19*

PWR_OK DRQT0* DRQT1* INT6* INT7*

BCLK* CCLK* XACK* INTA* IOWC* MWTC* DAT0* DAT2* DAT4* DAT6*
ADR0* ADR2* ADR4* ADR6* ADR8* ADR10* ADR12* ADR14* ADR16* ADR18*

MPOS_CPU_SENSE
VCC_CPU

BLOCK PATHNAME $PROJECT_EVEREST/mpos3_ASM/mpos3										BLOCK SHT 1 OF 8		
REV 1 PCN XXXXXXXX DESCRIPTION XXXXXXXXXXXXXXXXXXXXXXXXXXXXXXXXXX MADE BY NAME DATE DD/MM/YY APPR BY NAME DATE DD/MM/YY				MADE SEAL IND. DATE 19/02/99 CHECK BAYLE DATE 19/02/99 APPR ALBESA DATE 19/02/99 OTHER NAME DATE DD/MM/YY		GE Medical Systems BUC - FRANCE		DESIGN TITLE BACKPLANE MOD/POS BOARD_MPLAN FIRST MADE FOR EVEREST				
REV 2 PCN XXXXXXXX DESCRIPTION XXXXXXXXXXXXXXXXXXXXXXXXXXXXXXXXXX MADE BY NAME DATE DD/MM/YY APPR BY NAME DATE DD/MM/YY								DRAWING NO. 2238228SCH		REV A	SIZE 3	SHT/CONT. ON 1 / 8

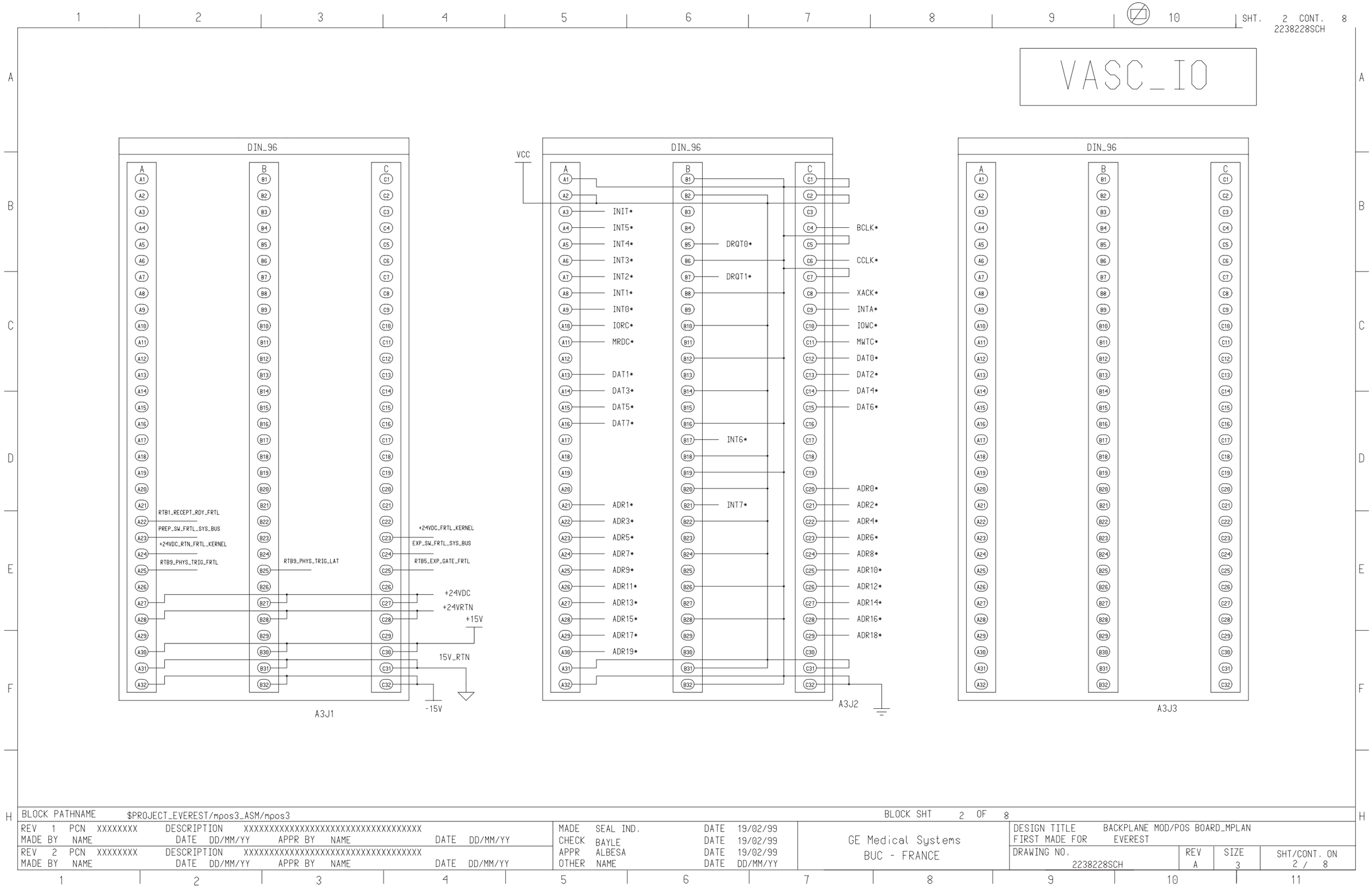

FRONTAL POSITIONER RACK

SHT. 3 CONT. 8
2238228SCH

COLL_CTRL_SERVO#1

8-A1 COLL_1(50:1)

A4J1

DIN_96

15V_RTN

+24VDC
+24VRTN
+15V
15V_RTN
-15V

A4J2

DIN_96

VCC

INIT*
INT5*
INT4*
INT3*
INT2*
INT1*
INT0*
IORC*
MRDC*
DAT1*
DAT3*
DAT5*
DAT7*
ADR1*
ADR3*
ADR5*
ADR7*
ADR9*
ADR11*
ADR13*
ADR15*
ADR17*
ADR19*

DRQT0*
DRQT1*
INT6*
INT7*

BCLK*
CCLK*
XACK*
INTA*
IOWC*
MWTC*
DAT0*
DAT2*
DAT4*
DAT6*
ADR0*
ADR2*
ADR4*
ADR6*
ADR8*
ADR10*
ADR12*
ADR14*
ADR16*
ADR18*

A4J3

DIN_96

COLL_TRANS_MTR_LO#1
COLL_TRANS_MTR_HI#1
COLL_SERVO_PS_RTN
COLL_SERVO_PS_+VDC
COLL_SERVO_PS_-VDC
COLL_LONG_MTR_HI#1
COLL_LONG_MTR_LO#1

J14

BLOCK PATHNAME	$PROJECT_EVEREST/mpos3_ASM/mpos3		BLOCK SHT 3 OF 8
REV 1 PCN XXXXXXXX DESCRIPTION XXXXXXXXXXXXXXXXXXXXXXXXXXXXXXXXXX MADE BY NAME DATE DD/MM/YY APPR BY NAME DATE DD/MM/YY	MADE SEAL IND. DATE 19/02/99 CHECK BAYLE DATE 19/02/99 APPR ALBESA DATE 19/02/99 OTHER NAME DATE DD/MM/YY	GE Medical Systems BUC - FRANCE	DESIGN TITLE BACKPLANE MOD/POS BOARD_MPLAN FIRST MADE FOR EVEREST DRAWING NO. 2238228SCH / REV A / SIZE 3 / SHT/CONT. ON 3 / 8
REV 2 PCN XXXXXXXX DESCRIPTION XXXXXXXXXXXXXXXXXXXXXXXXXXXXXXXXXX MADE BY NAME DATE DD/MM/YY APPR BY NAME DATE DD/MM/YY			

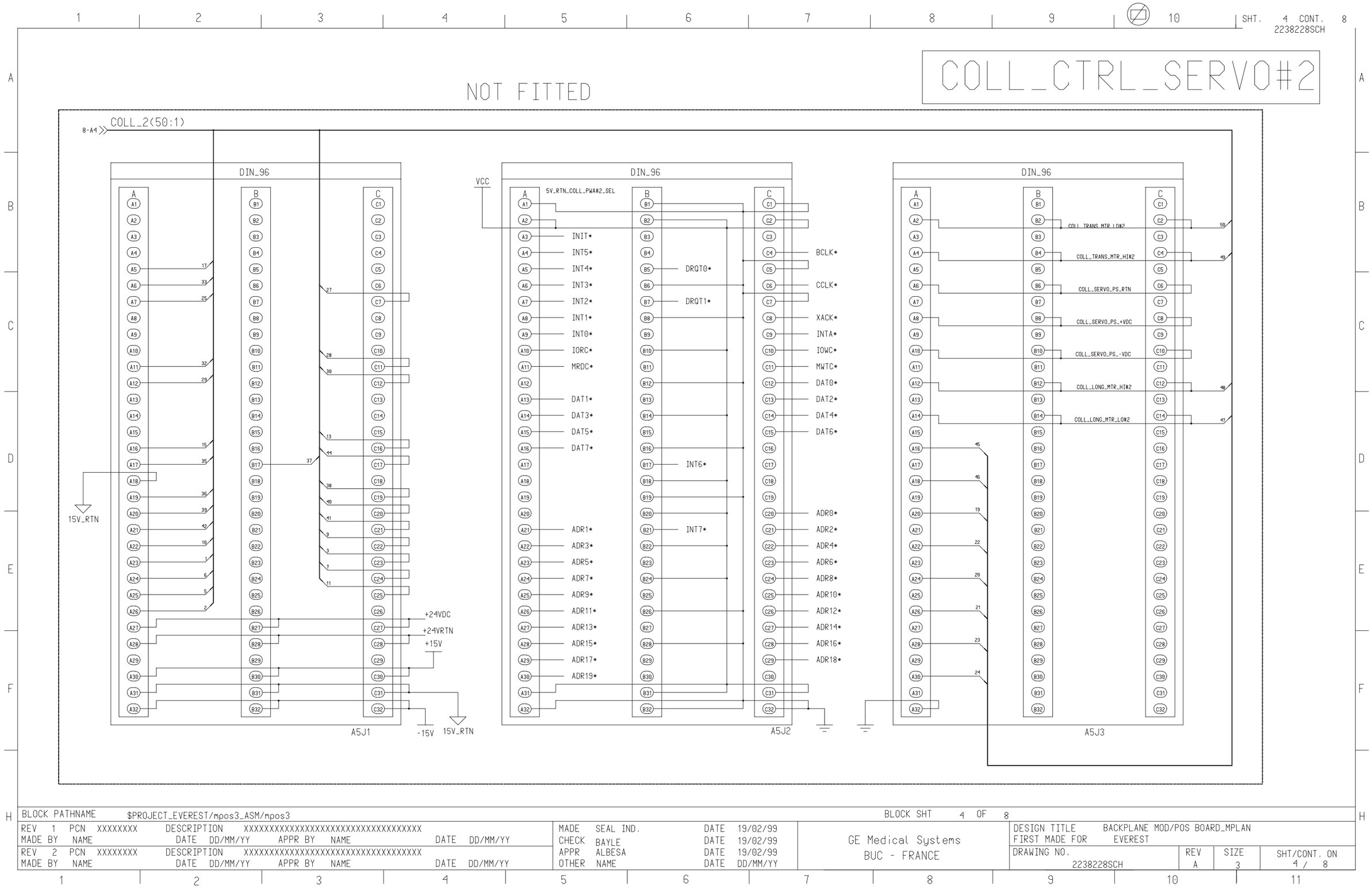

BLOCK PATHNAME	$PROJECT_EVEREST/mpos3_ASM/mpos3	BLOCK SHT 4 OF 8	
REV 1 PCN XXXXXXXX DESCRIPTION XXXXXXXXXXXXXXXXXXXXXXXXXXXXXXXXXX MADE BY NAME DATE DD/MM/YY APPR BY NAME DATE DD/MM/YY	MADE SEAL IND. DATE 19/02/99 CHECK BAYLE DATE 19/02/99 APPR ALBESA DATE 19/02/99 OTHER NAME DATE DD/MM/YY	GE Medical Systems BUC - FRANCE	DESIGN TITLE BACKPLANE MOD/POS BOARD_MPLAN FIRST MADE FOR EVEREST DRAWING NO. 2238228SCH / REV A / SIZE 3 / SHT/CONT. ON 4 / 8
REV 2 PCN XXXXXXXX DESCRIPTION XXXXXXXXXXXXXXXXXXXXXXXXXXXXXXXXXX MADE BY NAME DATE DD/MM/YY APPR BY NAME DATE DD/MM/YY			

FRONTAL POSITIONER RACK

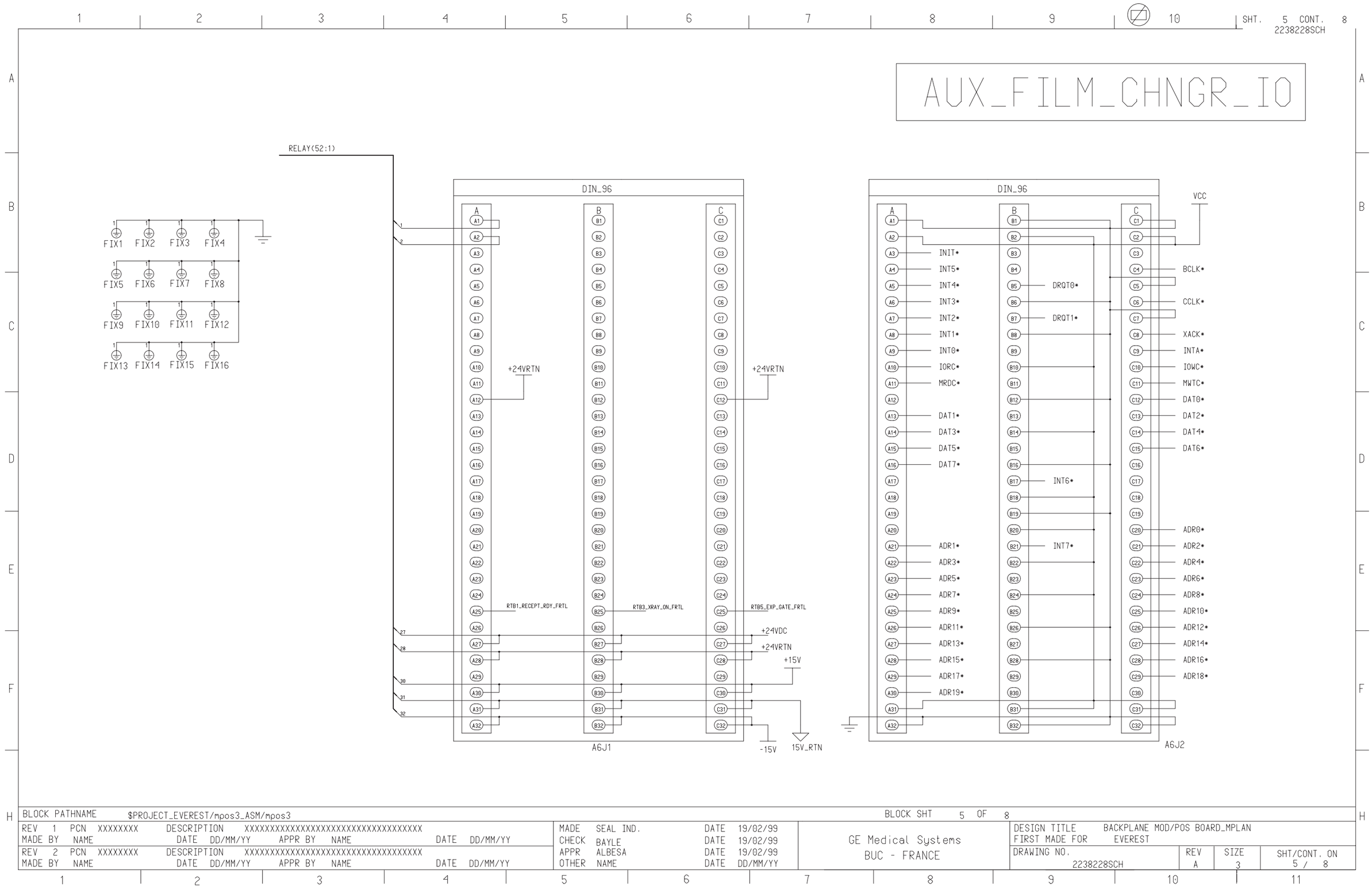

BLOCK PATHNAME $PROJECT_EVEREST/mpos3_ASM/mpos3 — BLOCK SHT 5 OF 8

REV 1 PCN XXXXXXXX DESCRIPTION XXXXXXXXXXXXXXXXXXXXXXXXXXXXXXXXXX MADE BY NAME DATE DD/MM/YY APPR BY NAME DATE DD/MM/YY	MADE SEAL IND. DATE 19/02/99 CHECK BAYLE DATE 19/02/99 APPR ALBESA DATE 19/02/99 OTHER NAME DATE DD/MM/YY	GE Medical Systems BUC - FRANCE	DESIGN TITLE BACKPLANE MOD/POS BOARD_MPLAN FIRST MADE FOR EVEREST				
REV 2 PCN XXXXXXXX DESCRIPTION XXXXXXXXXXXXXXXXXXXXXXXXXXXXXXXXXX MADE BY NAME DATE DD/MM/YY APPR BY NAME DATE DD/MM/YY			DRAWING NO. 2238228SCH	REV A	SIZE 3	SHT/CONT. ON 5 / 8	

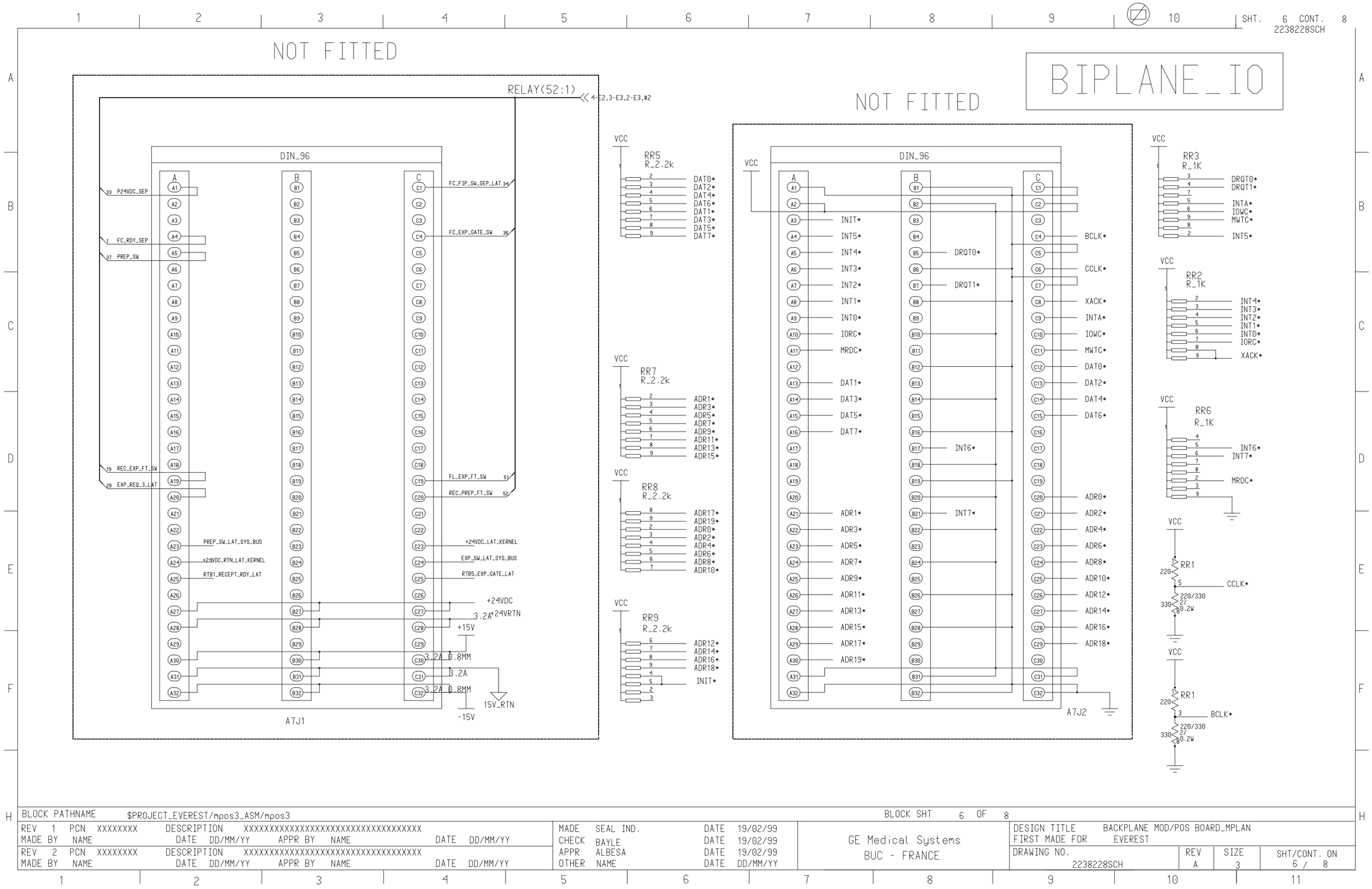

BLOCK PATHNAME $PROJECT_EVEREST/mpos3_ASM/mpos3								BLOCK SHT 6 OF 8				
REV 1 PCN XXXXXXXX DESCRIPTION XXXXXXXXXXXXXXXXXXXXXXXXXXXXXXXXXX MADE BY NAME DATE DD/MM/YY APPR BY NAME DATE DD/MM/YY				MADE SEAL IND. DATE 19/02/99 CHECK BAYLE DATE 19/02/99 APPR ALBESA DATE 19/02/99 OTHER NAME DATE DD/MM/YY		GE Medical Systems BUC - FRANCE		DESIGN TITLE BACKPLANE MOD/POS BOARD_MPLAN FIRST MADE FOR EVEREST				
REV 2 PCN XXXXXXXX DESCRIPTION XXXXXXXXXXXXXXXXXXXXXXXXXXXXXXXXXX MADE BY NAME DATE DD/MM/YY APPR BY NAME DATE DD/MM/YY								DRAWING NO. 2238228SCH		REV A	SIZE 3	SHT/CONT. ON 6 / 8

FRONTAL POSITIONER RACK

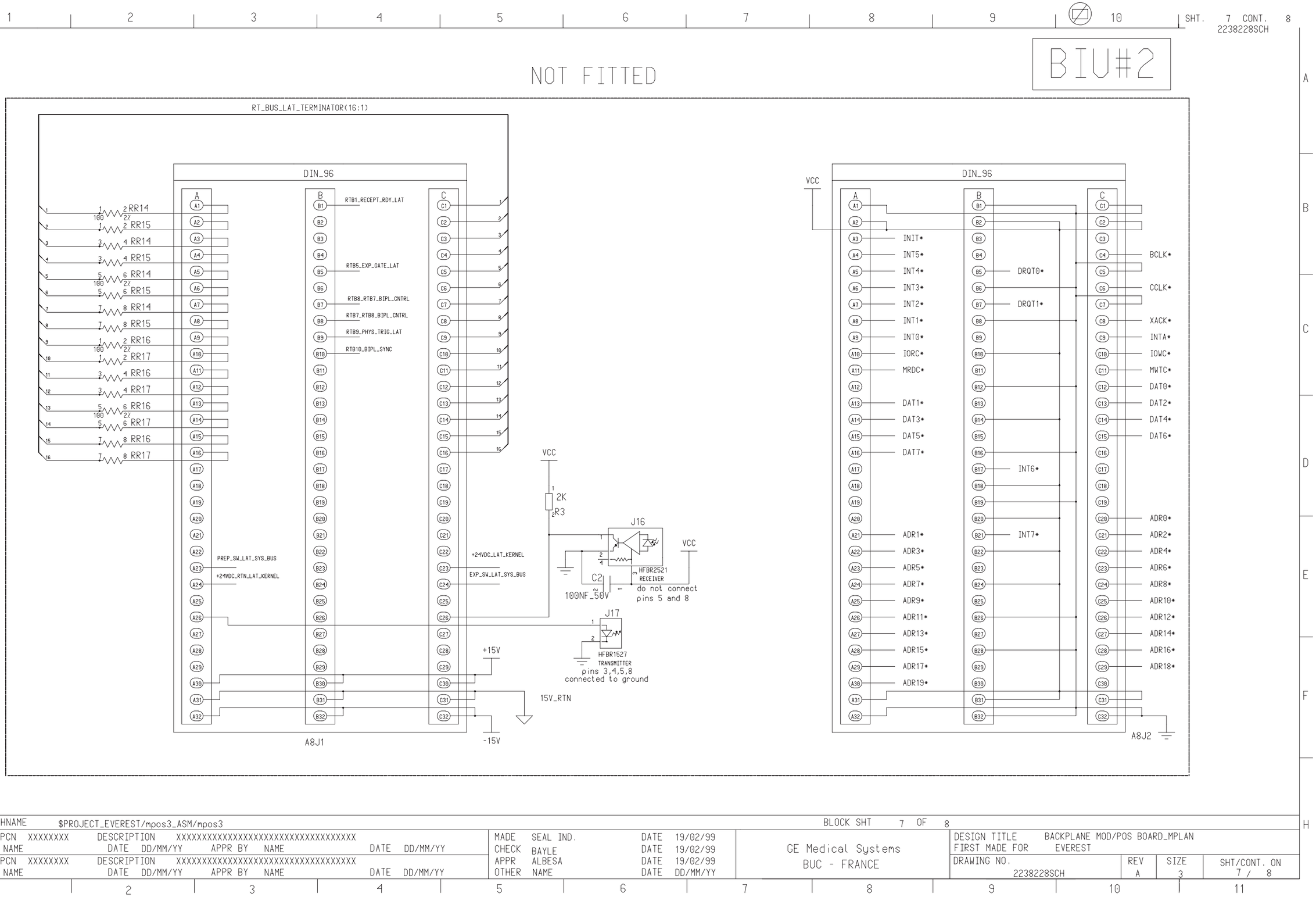

BLOCK PATHNAME $PROJECT_EVEREST/mpos3_ASM/mpos3		BLOCK SHT 7 OF 8	
REV 1 PCN XXXXXXXX DESCRIPTION XXXXXXXXXXXXXXXXXXXXXXXXXXXXXXXXXX MADE BY NAME DATE DD/MM/YY APPR BY NAME DATE DD/MM/YY	MADE SEAL IND. DATE 19/02/99 CHECK BAYLE DATE 19/02/99 APPR ALBESA DATE 19/02/99 OTHER NAME DATE DD/MM/YY	GE Medical Systems BUC - FRANCE	DESIGN TITLE BACKPLANE MOD/POS BOARD_MPLAN FIRST MADE FOR EVEREST
REV 2 PCN XXXXXXXX DESCRIPTION XXXXXXXXXXXXXXXXXXXXXXXXXXXXXXXXXX MADE BY NAME DATE DD/MM/YY APPR BY NAME DATE DD/MM/YY			DRAWING NO. 2238228SCH / REV A / SIZE 3 / SHT/CONT. ON 7 / 8

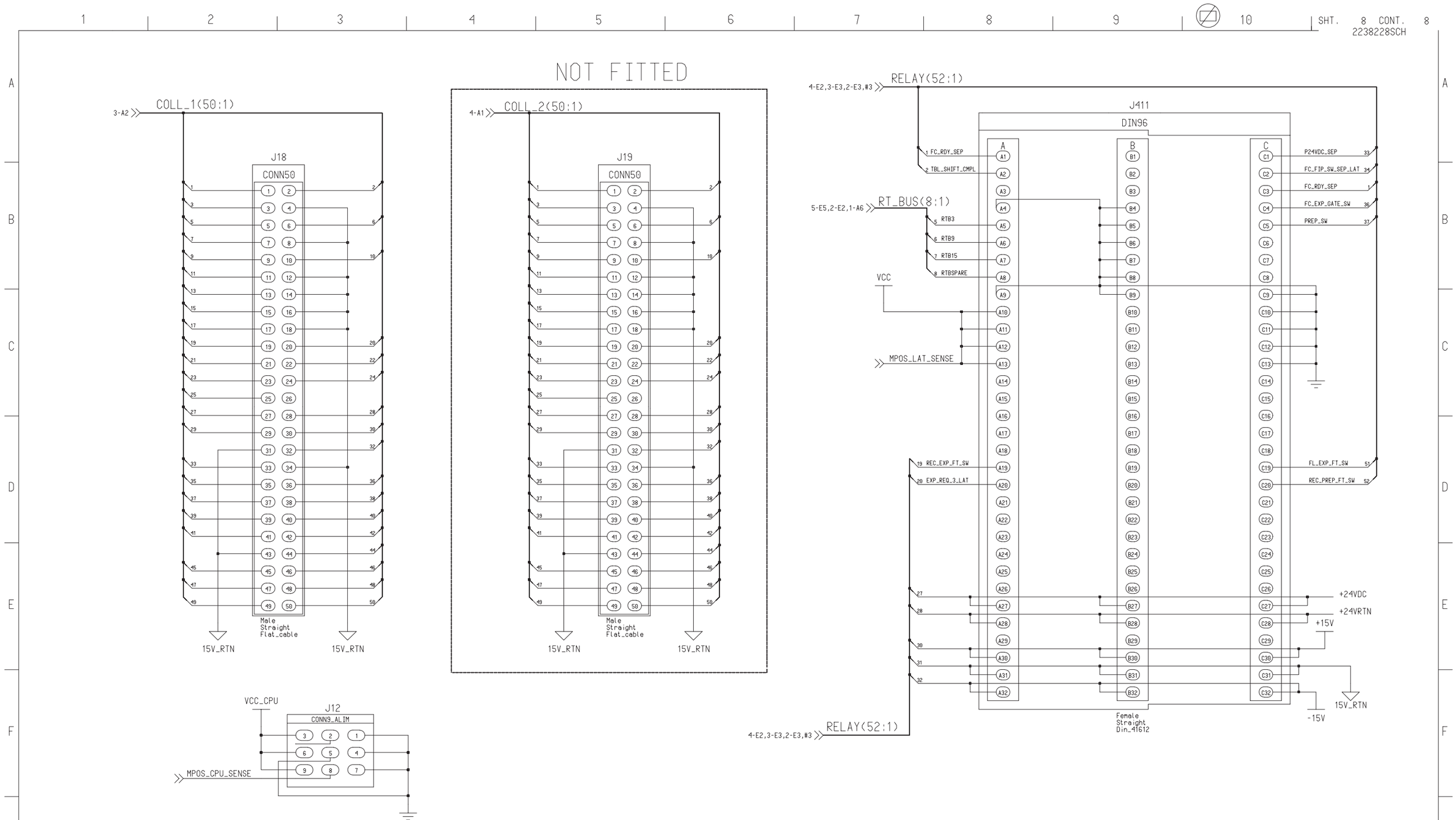

BLOCK PATHNAME $PROJECT_EVEREST/mpos3_ASM/mpos3								BLOCK SHT 8 OF 8			
REV 1 PCN XXXXXXXX DESCRIPTION XXXXXXXXXXXXXXXXXXXXXXXXXXXXXXXXXX MADE BY NAME DATE DD/MM/YY APPR BY NAME DATE DD/MM/YY				MADE SEAL IND. DATE 19/02/99 CHECK BAYLE DATE 19/02/99 APPR ALBESA DATE 19/02/99 OTHER NAME DATE DD/MM/YY		GE Medical Systems BUC - FRANCE		DESIGN TITLE BACKPLANE MOD/POS BOARD_MPLAN FIRST MADE FOR EVEREST			
REV 2 PCN XXXXXXXX DESCRIPTION XXXXXXXXXXXXXXXXXXXXXXXXXXXXXXXXXX MADE BY NAME DATE DD/MM/YY APPR BY NAME DATE DD/MM/YY								DRAWING NO. 2238228SCH	REV A	SIZE 3	SHT/CONT. ON 8 / 8

Blank page.

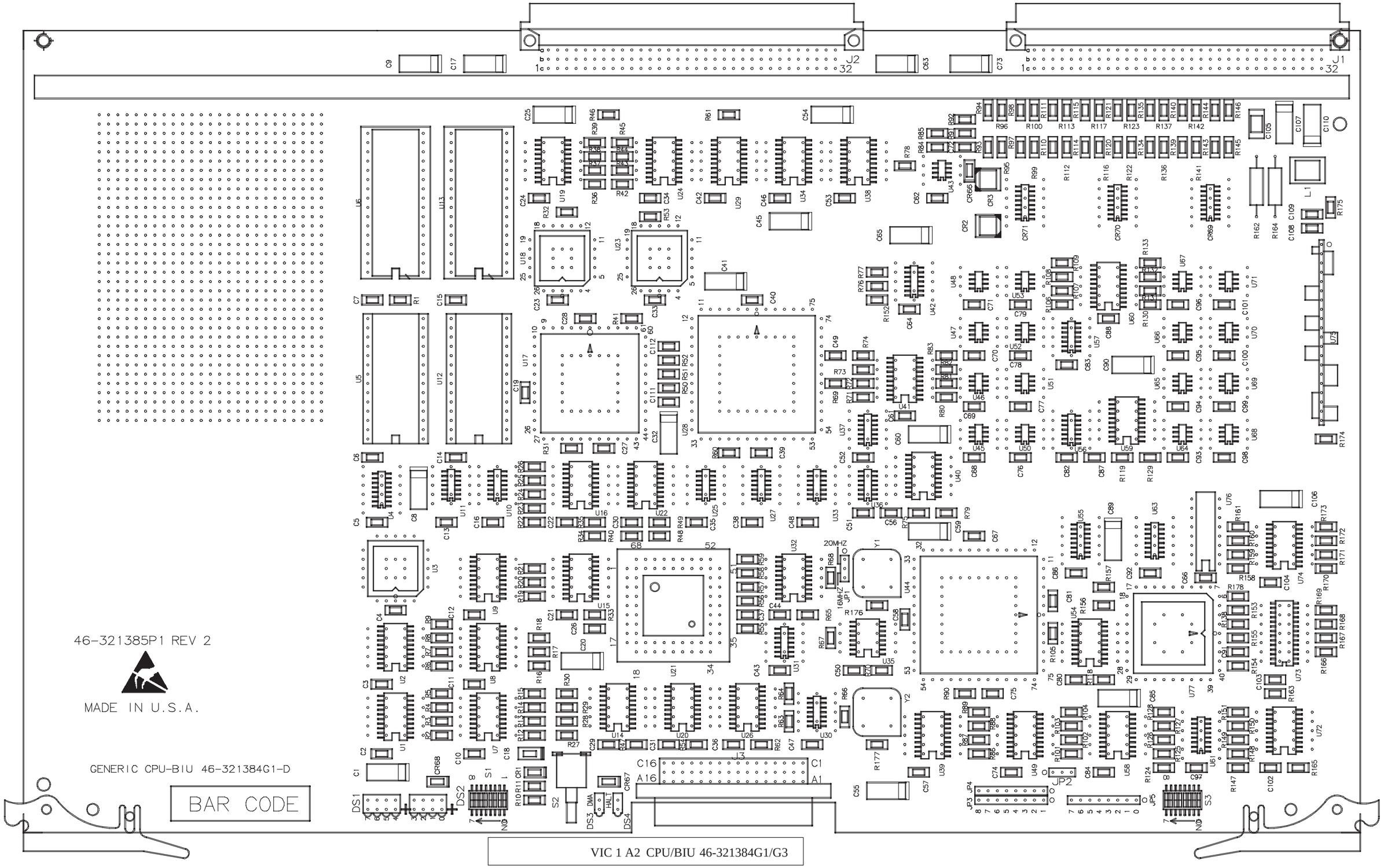
J2
J1
46-321385P1 REV 2
MADE IN U.S.A.
GENERIC CPU-BIU 46-321384G1-D
BAR CODE
20MHZ
16MHZ
JP1
DS1
DS2
DS3
DS4
S1
S2
S3
DMA
HALT
VIC 1 A2 CPU/BIU 46-321384G1/G3

FRONTAL POSITIONER RACK

SHEET_NAME	SHT NUM	REV
CPUBIU.BOARD	2	0
MICRO	3	0
CPU (1)	4	3
CPU (2)	5	2
CTRL	6	1
RAM	7	1
MEMIT (1)	8	1
MEMIT (2)	9	0
MULTIBUS (1)	10	2
MULTIBUS (2)	11	0
BIU	12	0
DECOD	13	1
RT_BUS (1)	14	1
RT_BUS (2)	15	1
RT_BUS (3)	16	1
GE_BUS (1)	17	1
GE_BUS (2)	18	7
CONNECT (1)	19	1
CONNECT (2)	20	1
POWER (1)	21	0
POWER (2)	22	3
POWER (3)	23	1

NOTES:

1. THE GROUP NUMBER AND GROUP REVISION FOR THIS PWA IS 46-321384G1-E, G2-C, G3-A, G4-B.
2. UNLESS OTHERWISE SPECIFIED:
   RESISTORS ARE IN OHMS, 0.25W, 1%.
   CAPACITORS ARE IN FARADS.
   INDUCTORS ARE IN OHMS AT 100MHz.
3. ACTIVE LOW SIGNALS ARE INDICATED WITH "*" AFTER THE SIGNAL NAME

REVISION	PCN NUMBER	DATE	SIGN OFF
A	------	03/JUN/93	
0	------	28/JUN/93	
1	169719	28/SEP/93	
2	169751	20/DEC/93	
3	169795	27/JAN/94	
4	169922	11/OCT/94	
5	169953	12/JAN/95	
6	193030	25/SEP/95	JWW
7	201247	1/APR/97	JWW
8	201375	7MAY97	

BLOCK PATHNAME					cpubiu.impl SHEET 1 OF 2		
REV 8	GENERIC CPU-BIU	LOCATION CODE	APPROVALS	GE Medical Systems	REVISIONS		
DRAWING NO. 46-321384-S	FIRST MADE FOR ADVANTX	XXXX-XXX-XXX	JWW 30JUN93	BUC - FRANCE	5 GT 12JAN95	7 GT 1APR97	
SHT. NO. 1 CONT. ON SHT. NO. 2	MADE BY S. CARTEREAU DATE 14-OCT-93	ISSUED JOHN DWYER DATE 29JUN93	PRINTS TO 404		PCN 169953	PCN 201247	
					6 JWW 25SEP95	8 GT 7MAY97	
					PCN 193030	PCN 201375	

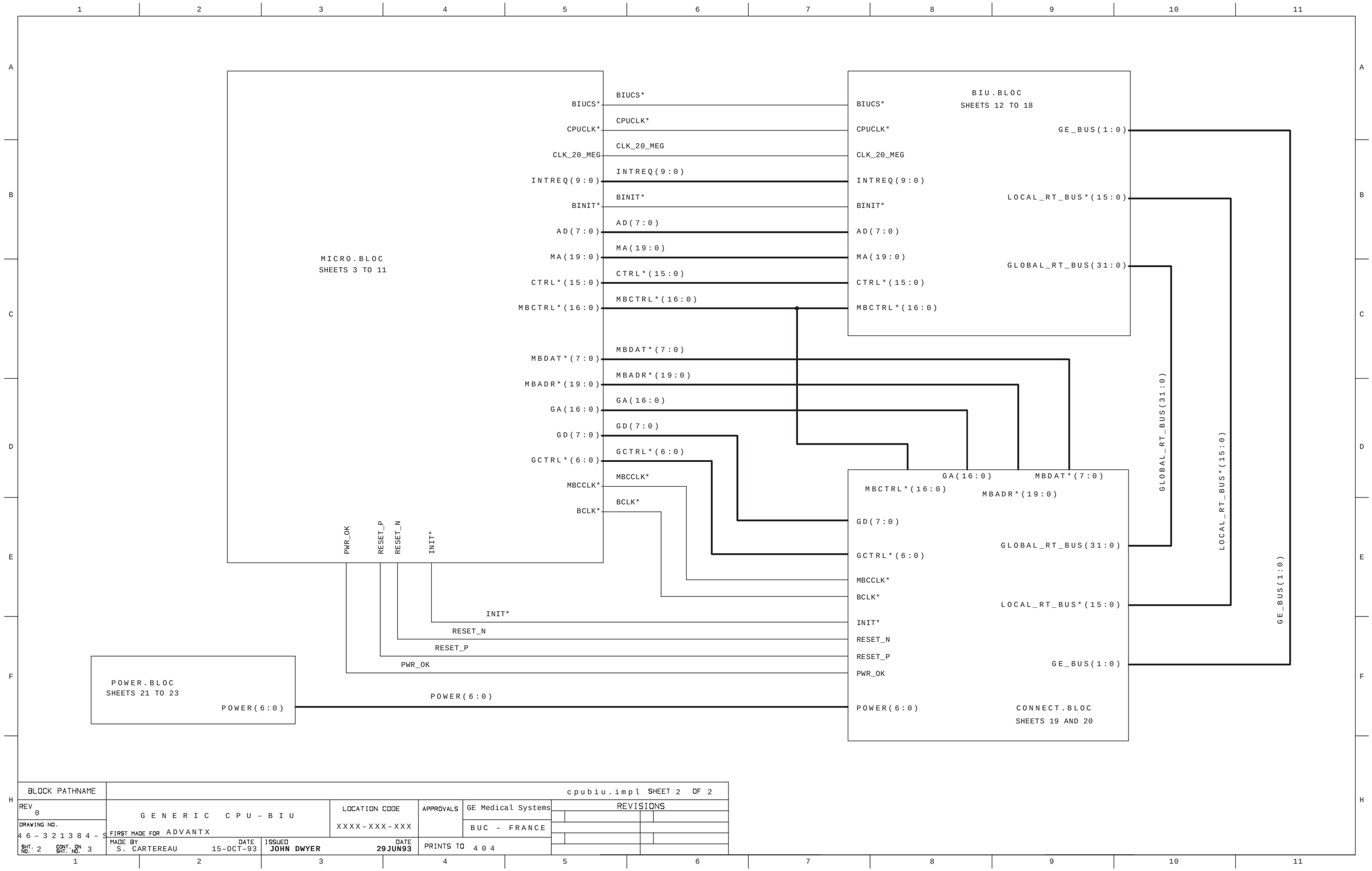

BLOCK PATHNAME					cpubiu.impl SHEET 2 OF 2
REV 0	GENERIC CPU-BIU	LOCATION CODE	APPROVALS	GE Medical Systems	REVISIONS
DRAWING NO. 46-321384-S	FIRST MADE FOR ADVANTX	XXXX-XXX-XXX		BUC - FRANCE	
SHT. NO. 2 CONT. ON SHT. NO. 3	MADE BY S. CARTEREAU DATE 15-OCT-93	ISSUED JOHN DWYER DATE 29JUN93	PRINTS TO 404		

FRONTAL POSITIONER RACK

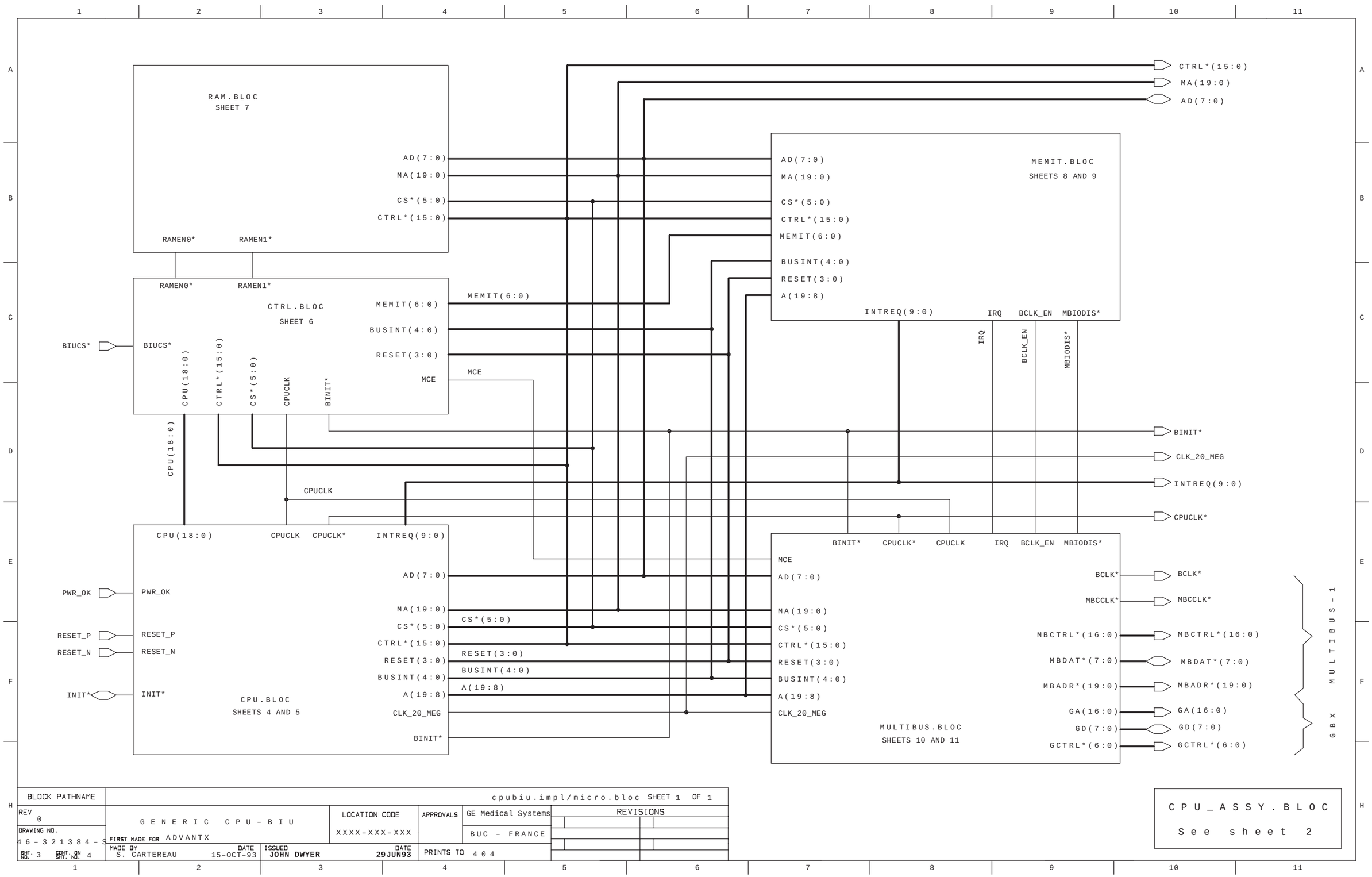
RAM.BLOC
SHEET 7
AD(7:0)
MA(19:0)
CS*(5:0)
CTRL*(15:0)
RAMEN0*
RAMEN1*
CTRL.BLOC
SHEET 6
MEMIT(6:0)
BUSINT(4:0)
RESET(3:0)
MCE
BIUCS*
CPU(18:0)
CTRL*(15:0)
CS*(5:0)
CPUCLK
BINIT*
CPUCLK
CPU.BLOC
SHEETS 4 AND 5
CPU(18:0)
CPUCLK
CPUCLK*
INTREQ(9:0)
PWR_OK
RESET_P
RESET_N
INIT*
A(19:8)
CLK_20_MEG
MEMIT.BLOC
SHEETS 8 AND 9
INTREQ(9:0)
IRQ
BCLK_EN
MBIODIS*
MULTIBUS.BLOC
SHEETS 10 AND 11
BINIT*
BCLK*
MBCCLK*
MBCTRL*(16:0)
MBDAT*(7:0)
MBADR*(19:0)
GA(16:0)
GD(7:0)
GCTRL*(6:0)
GBX MULTIBUS-1
CTRL*(15:0)
MA(19:0)
AD(7:0)
CLK_20_MEG
CPUCLK*
BLOCK PATHNAME
cpubiu.impl/micro.bloc SHEET 1 OF 1
REV 0
GENERIC CPU-BIU
LOCATION CODE
XXXX-XXX-XXX
APPROVALS
GE Medical Systems
BUC - FRANCE
REVISIONS
DRAWING NO.
46-321384-S
FIRST MADE FOR ADVANTX
MADE BY S. CARTEREAU DATE 15-OCT-93
ISSUED JOHN DWYER DATE 29JUN93
PRINTS TO 404
SHT. NO. 3 CONT. ON SHT. NO. 4
CPU_ASSY.BLOC
See sheet 2

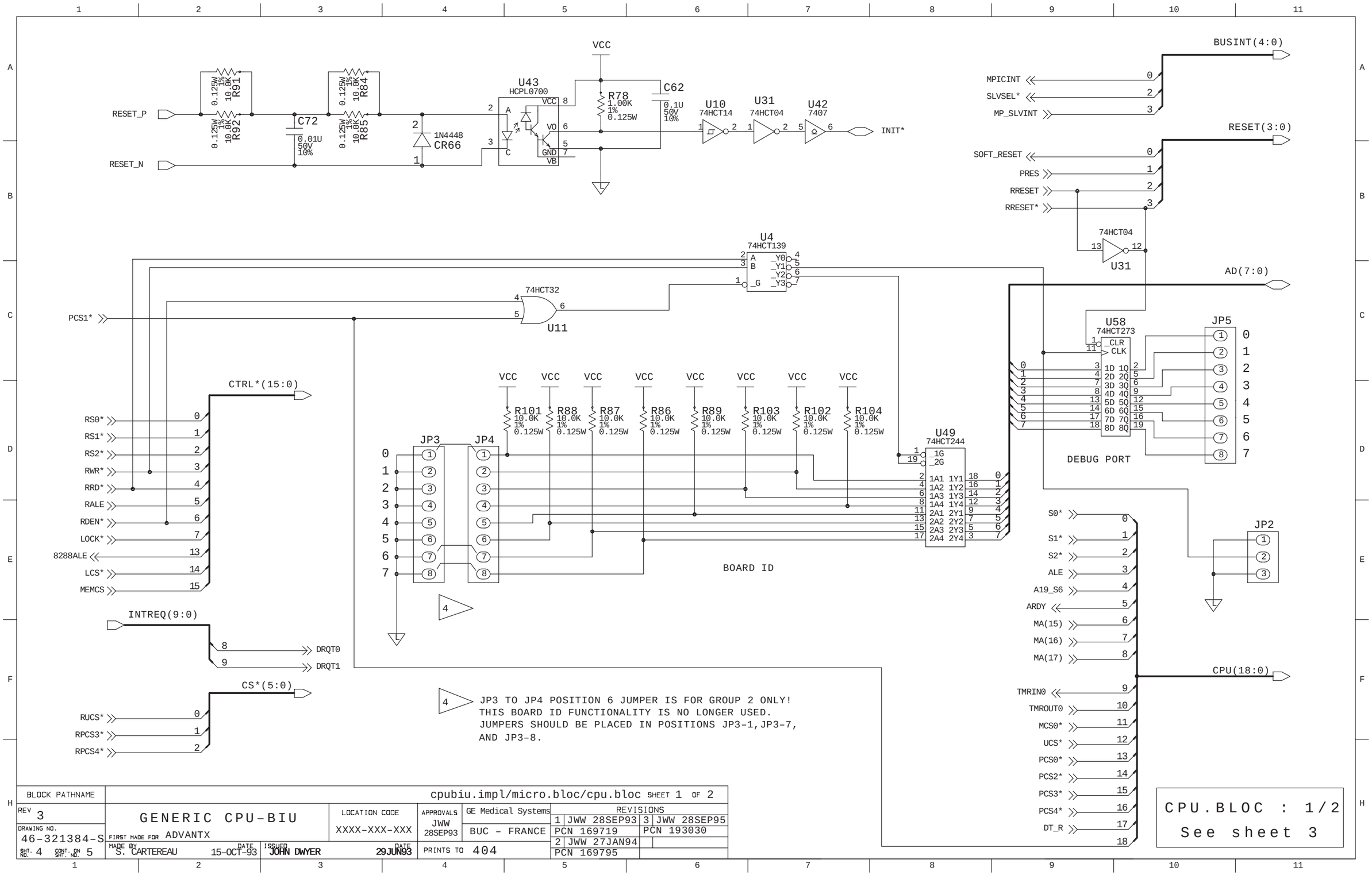
RESET_P
RESET_N
R91 10.0K 1% 0.125W
R92 10.0K 1% 0.125W
C72 0.01U 50V 10%
R84 10.0K 1% 0.125W
R85 10.0K 1% 0.125W
CR66 1N4448
U43 HCPL0700
VCC
R78 1.00K 1% 0.125W
C62 0.1U 50V 10%
U10 74HCT14
U31 74HCT04
U42 7407
INIT*
BUSINT(4:0)
MPICINT
SLVSEL*
MP_SLVINT
RESET(3:0)
SOFT_RESET
PRES
RRESET
RRESET*
U4 74HCT139
74HCT32
U11
PCS1*
AD(7:0)
U58 74HCT273
JP5
DEBUG PORT
CTRL*(15:0)
RS0*
RS1*
RS2*
RWR*
RRD*
RALE
RDEN*
LOCK*
8288ALE
LCS*
MEMCS
R101 10.0K 1% 0.125W
R88 10.0K 1% 0.125W
R87 10.0K 1% 0.125W
R86 10.0K 1% 0.125W
R89 10.0K 1% 0.125W
R103 10.0K 1% 0.125W
R102 10.0K 1% 0.125W
R104 10.0K 1% 0.125W
JP3
JP4
U49 74HCT244
BOARD ID
JP2
S0*
S1*
S2*
ALE
A19_S6
ARDY
MA(15)
MA(16)
MA(17)
CPU(18:0)
TMRIN0
TMROUT0
MCS0*
UCS*
PCS0*
PCS2*
PCS3*
PCS4*
DT_R
INTREQ(9:0)
DRQT0
DRQT1
CS*(5:0)
RUCS*
RPCS3*
RPCS4*
4
JP3 TO JP4 POSITION 6 JUMPER IS FOR GROUP 2 ONLY!
THIS BOARD ID FUNCTIONALITY IS NO LONGER USED.
JUMPERS SHOULD BE PLACED IN POSITIONS JP3-1,JP3-7,
AND JP3-8.
BLOCK PATHNAME
cpubiu.impl/micro.bloc/cpu.bloc SHEET 1 OF 2
REV 3
GENERIC CPU-BIU
LOCATION CODE XXXX-XXX-XXX
APPROVALS JWW 28SEP93
GE Medical Systems
BUC - FRANCE
DRAWING NO. 46-321384-S
FIRST MADE FOR ADVANTX
MADE BY S. CARTEREAU DATE 15-OCT-93
ISSUED JOHN DWYER DATE 29JUN93
PRINTS TO 404
SHT. NO. 4 CONT. ON SHT. NO. 5
REVISIONS
1 JWW 28SEP93
PCN 169719
2 JWW 27JAN94
PCN 169795
3 JWW 28SEP95
PCN 193030
CPU.BLOC : 1/2
See sheet 3

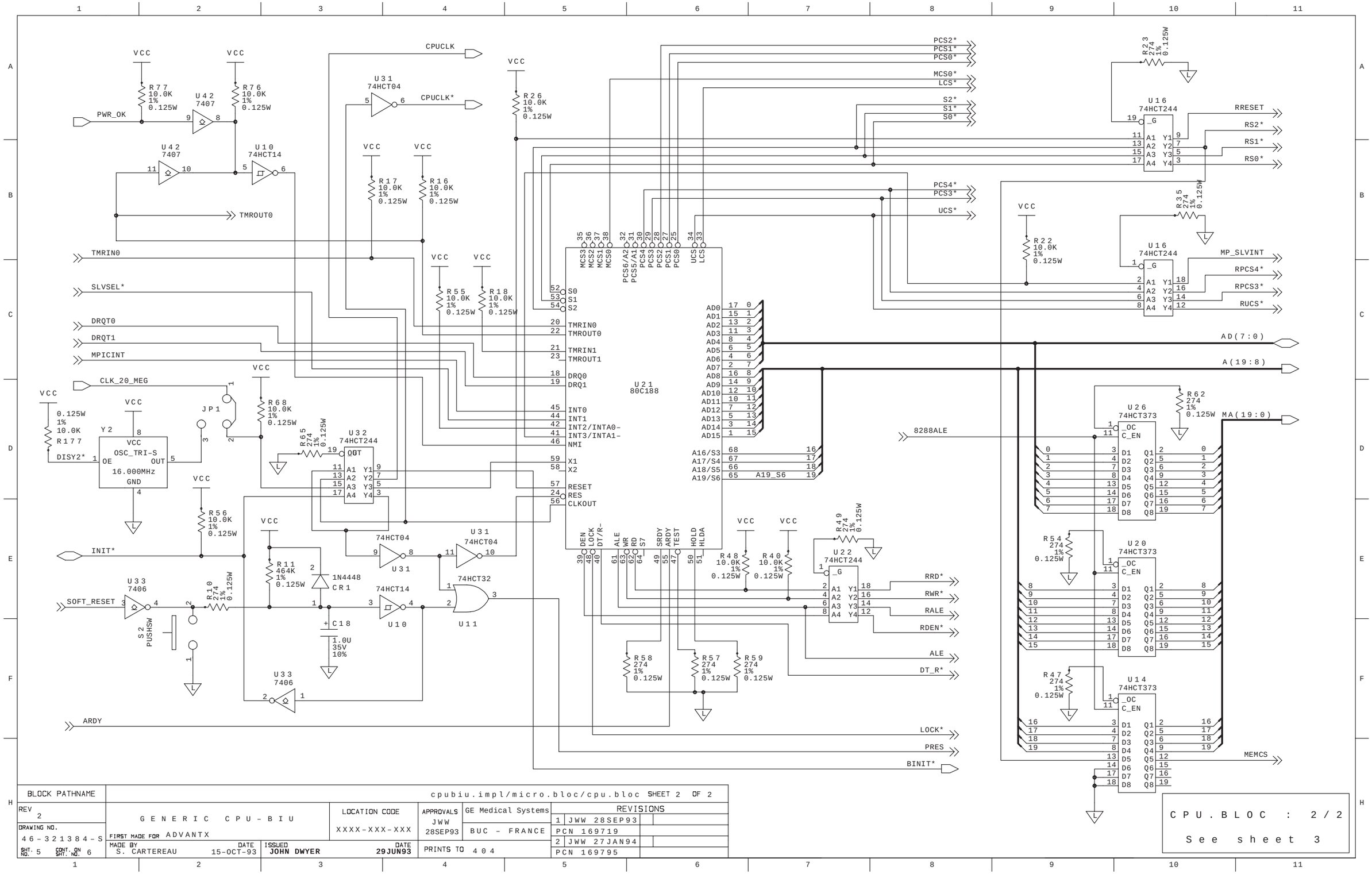

BLOCK PATHNAME	cpubiu.impl/micro.bloc/cpu.bloc SHEET 2 OF 2				
REV 2	G E N E R I C C P U - B I U	LOCATION CODE XXXX-XXX-XXX	APPROVALS JWW 28SEP93	GE Medical Systems	REVISIONS
DRAWING NO. 46-321384-S	FIRST MADE FOR ADVANTX			BUC - FRANCE	1 JWW 28SEP93
SHT. NO. 5 CONT. ON SHT. NO. 6	MADE BY S. CARTEREAU DATE 15-OCT-93	ISSUED JOHN DWYER DATE 29JUN93	PRINTS TO 404		PCN 169719
					2 JWW 27JAN94
					PCN 169795

C P U . B L O C : 2 / 2

See sheet 3

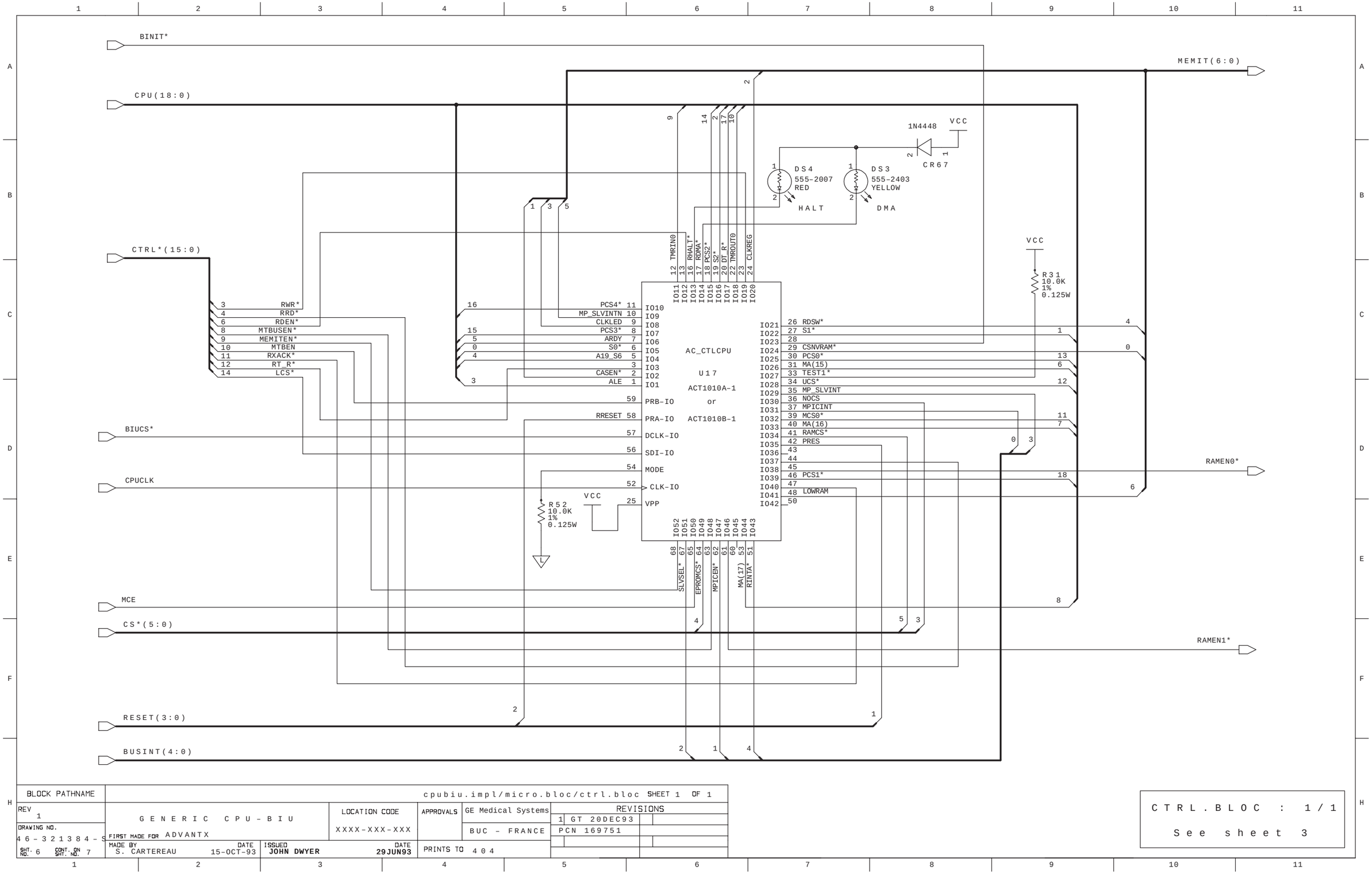

BLOCK PATHNAME	cpubiu.impl/micro.bloc/ctrl.bloc SHEET 1 OF 1				
REV 1	GENERIC CPU-BIU	LOCATION CODE XXXX-XXX-XXX	APPROVALS	GE Medical Systems	REVISIONS
DRAWING NO. 46-321384-S	FIRST MADE FOR ADVANTX			BUC - FRANCE	1 GT 20DEC93
SHT. NO. 6 CONT. ON SHT. NO. 7	MADE BY S. CARTEREAU DATE 15-OCT-93	ISSUED JOHN DWYER DATE 29JUN93	PRINTS TO 404		PCN 169751

CTRL.BLOC : 1/1

See sheet 3

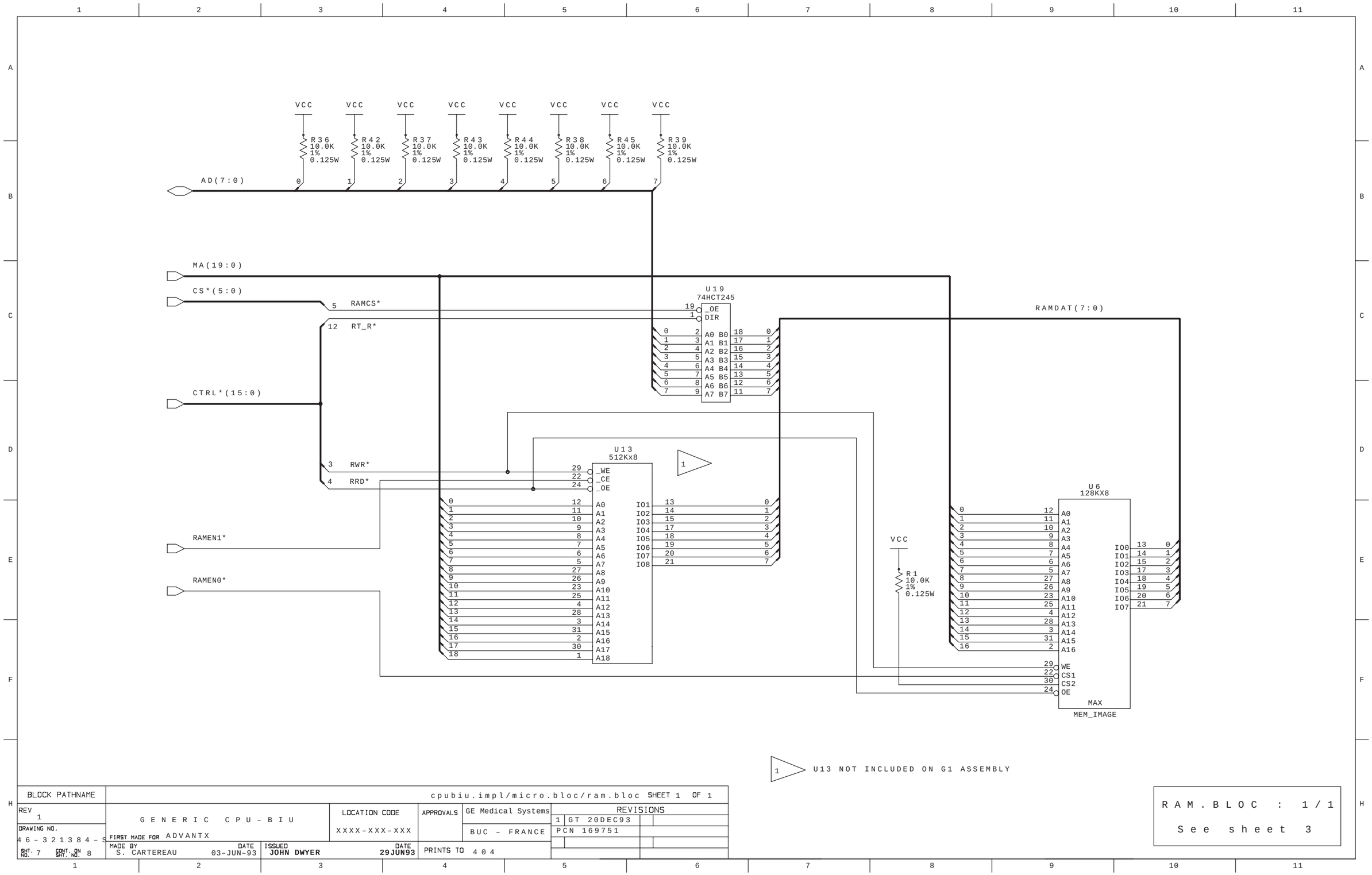

BLOCK PATHNAME	cpubiu.impl/micro.bloc/ram.bloc SHEET 1 OF 1				
REV 1	GENERIC CPU-BIU	LOCATION CODE XXXX-XXX-XXX	APPROVALS	GE Medical Systems	REVISIONS
DRAWING NO. 46-321384-S	FIRST MADE FOR ADVANTX			BUC - FRANCE	1 GT 20DEC93 / PCN 169751
SHT. NO. 7 CONT. ON SHT. NO. 8	MADE BY S. CARTEREAU DATE 03-JUN-93	ISSUED JOHN DWYER DATE 29JUN93	PRINTS TO 404		

RAM.BLOC : 1/1
See sheet 3

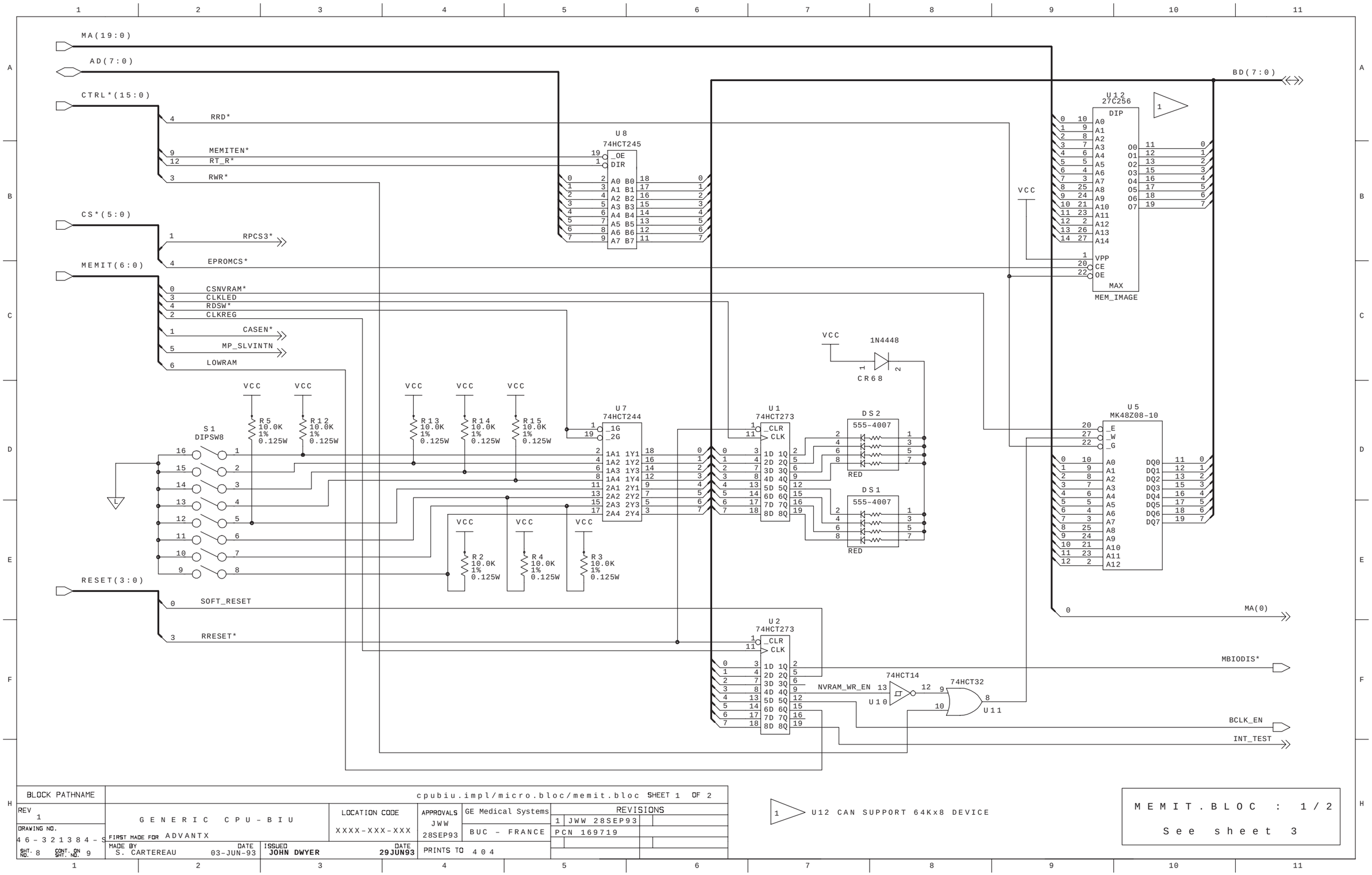
MA(19:0)
AD(7:0)
CTRL*(15:0)
4 RRD*
9 MEMITEN*
12 RT_R*
3 RWR*
CS*(5:0)
1 RPCS3*
MEMIT(6:0)
4 EPROMCS*
0 CSNVRAM*
3 CLKLED
4 RDSW*
2 CLKREG
1 CASEN*
5 MP_SLVINTN
6 LOWRAM
RESET(3:0)
0 SOFT_RESET
3 RRESET*
BD(7:0)
U8
74HCT245
_OE
DIR
A0 B0
A1 B1
A2 B2
A3 B3
A4 B4
A5 B5
A6 B6
A7 B7
U12
27C256
DIP
A0
A1
A2
A3
A4
A5
A6
A7
A8
A9
A10
A11
A12
A13
A14
O0
O1
O2
O3
O4
O5
O6
O7
VPP
CE
OE
MAX
MEM_IMAGE
VCC
1N4448
CR68
S1
DIPSW8
R5 10.0K 1% 0.125W
R12 10.0K 1% 0.125W
R13 10.0K 1% 0.125W
R14 10.0K 1% 0.125W
R15 10.0K 1% 0.125W
R2 10.0K 1% 0.125W
R4 10.0K 1% 0.125W
R3 10.0K 1% 0.125W
U7
74HCT244
_1G
_2G
1A1 1Y1
1A2 1Y2
1A3 1Y3
1A4 1Y4
2A1 2Y1
2A2 2Y2
2A3 2Y3
2A4 2Y4
U1
74HCT273
_CLR
CLK
1D 1Q
2D 2Q
3D 3Q
4D 4Q
5D 5Q
6D 6Q
7D 7Q
8D 8Q
DS2
555-4007
RED
DS1
555-4007
RED
U5
MK48Z08-10
_E
_W
_G
A0
A1
A2
A3
A4
A5
A6
A7
A8
A9
A10
A11
A12
DQ0
DQ1
DQ2
DQ3
DQ4
DQ5
DQ6
DQ7
0 MA(0)
U2
74HCT273
_CLR
CLK
1D 1Q
2D 2Q
3D 3Q
4D 4Q
5D 5Q
6D 6Q
7D 7Q
8D 8Q
MBIODIS*
NVRAM_WR_EN
74HCT14
U10
74HCT32
U11
BCLK_EN
INT_TEST
1 U12 CAN SUPPORT 64Kx8 DEVICE
MEMIT.BLOC : 1/2
See sheet 3
BLOCK PATHNAME
cpubiu.impl/micro.bloc/memit.bloc SHEET 1 OF 2
REV 1
GENERIC CPU-BIU
LOCATION CODE XXXX-XXX-XXX
APPROVALS JWW 28SEP93
GE Medical Systems
BUC - FRANCE
REVISIONS
1 JWW 28SEP93
PCN 169719
DRAWING NO. 46-321384-S
FIRST MADE FOR ADVANTX
MADE BY S. CARTEREAU DATE 03-JUN-93
ISSUED JOHN DWYER DATE 29JUN93
PRINTS TO 404
SHT. NO. 8 CONT. ON SHT. NO. 9

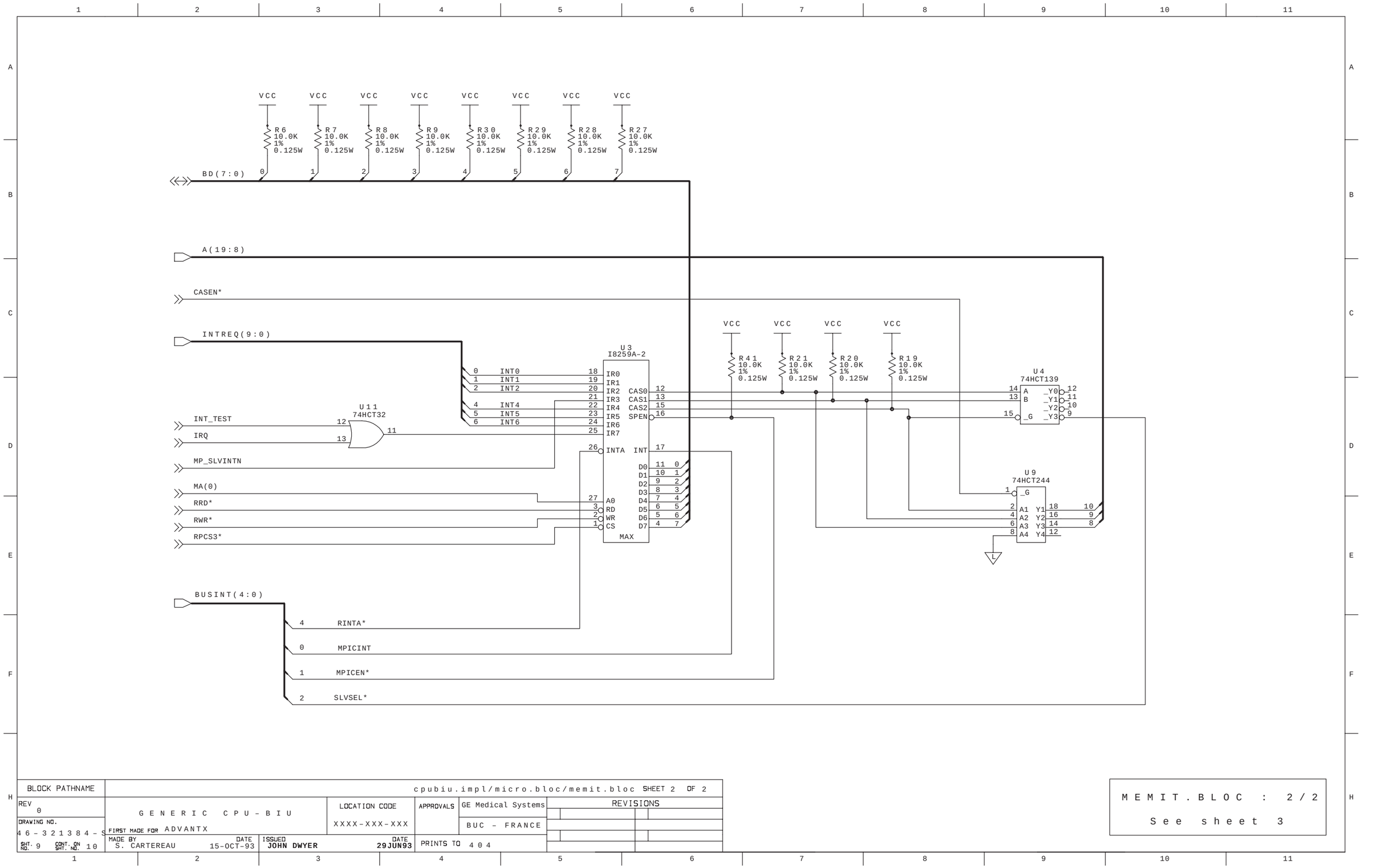

BLOCK PATHNAME	cpubiu.impl/micro.bloc/memit.bloc SHEET 2 OF 2				
REV 0	GENERIC CPU-BIU	LOCATION CODE XXXX-XXX-XXX	APPROVALS	GE Medical Systems	REVISIONS
DRAWING NO. 46-321384-S	FIRST MADE FOR ADVANTX			BUC - FRANCE	
SHT. NO. 9 CONT. ON SHT. NO. 10	MADE BY S. CARTEREAU DATE 15-OCT-93	ISSUED JOHN DWYER DATE 29JUN93		PRINTS TO 404	

MEMIT.BLOC : 2/2

See sheet 3

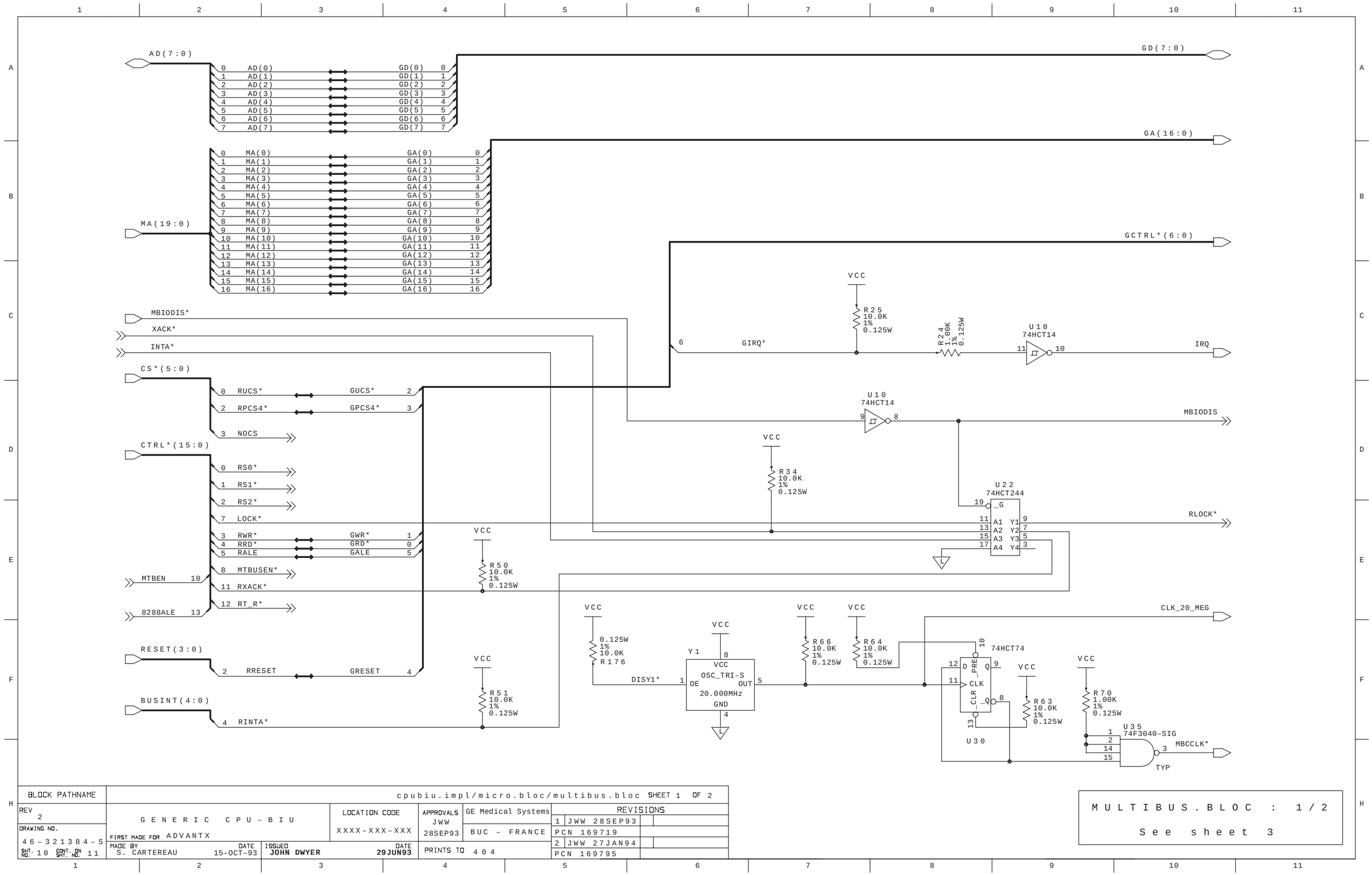

BLOCK PATHNAME	cpubiu.impl/micro.bloc/multibus.bloc SHEET 1 OF 2				
REV 2	GENERIC CPU-BIU	LOCATION CODE XXXX-XXX-XXX	APPROVALS JWW 28SEP93	GE Medical Systems BUC - FRANCE	REVISIONS
DRAWING NO. 46-321384-S	FIRST MADE FOR ADVANTX				1 JWW 28SEP93
SHT. NO. 10 CONT. ON SHT. NO. 11	MADE BY S. CARTEREAU DATE 15-OCT-93	ISSUED JOHN DWYER DATE 29JUN93	PRINTS TO 404		PCN 169719
					2 JWW 27JAN94
					PCN 169795

MULTIBUS.BLOC : 1/2

See sheet 3

FRONTAL POSITIONER RACK

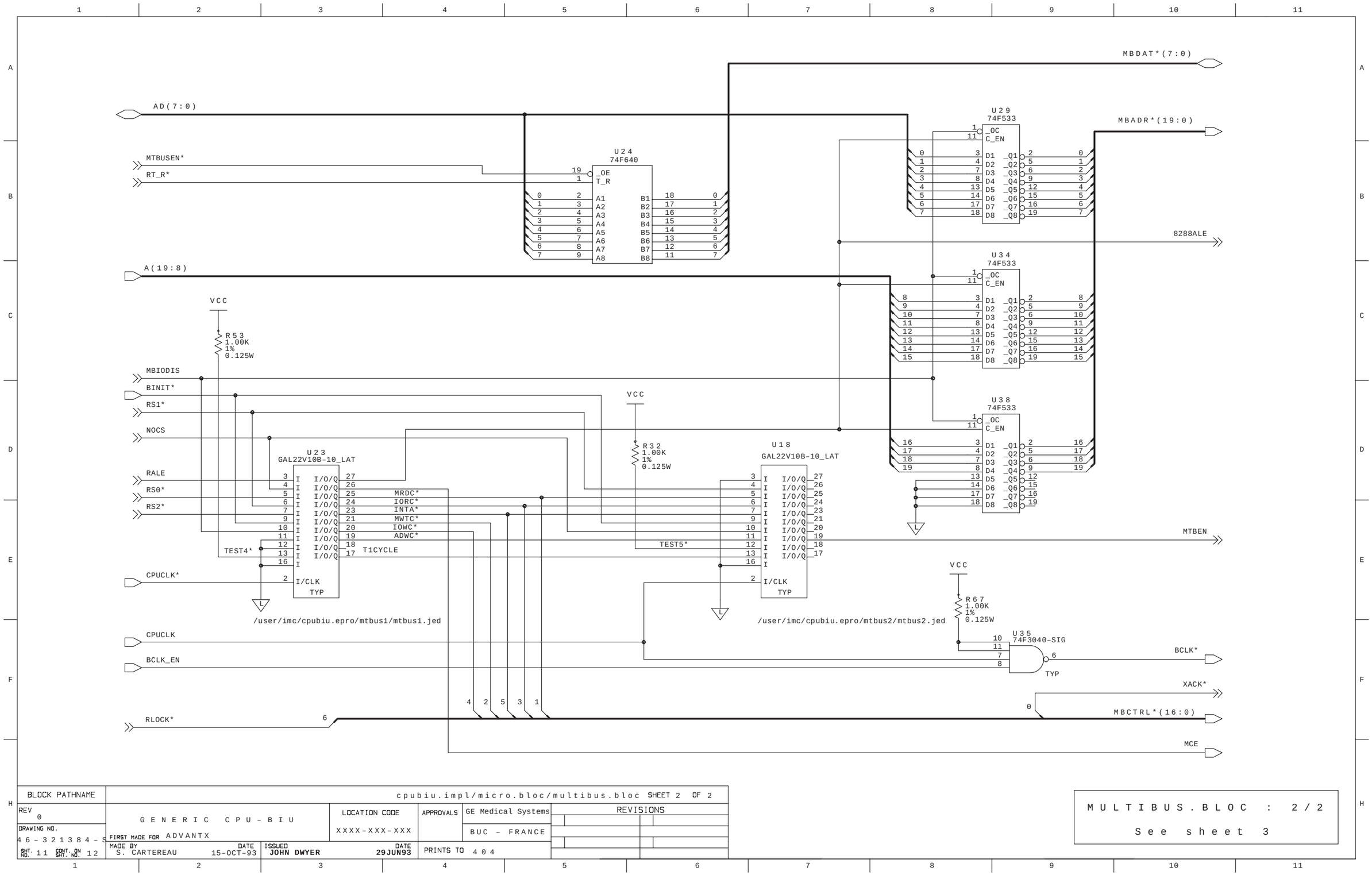
MBDAT*(7:0)
AD(7:0)
MBADR*(19:0)
U29
74F533
U24
74F640
MTBUSEN*
RT_R*
8288ALE
A(19:8)
U34
74F533
VCC
R53
1.00K
1%
0.125W
MBIODIS
BINIT*
RS1*
NOCS
U38
74F533
VCC
R32
1.00K
1%
0.125W
U18
GAL22V10B-10_LAT
U23
GAL22V10B-10_LAT
RALE
RS0*
RS2*
MRDC*
IORC*
INTA*
MWTC*
IOWC*
ADWC*
T1CYCLE
TEST4*
TEST5*
MTBEN
VCC
R67
1.00K
1%
0.125W
CPUCLK*
/user/imc/cpubiu.epro/mtbus1/mtbus1.jed
/user/imc/cpubiu.epro/mtbus2/mtbus2.jed
U35
74F3040-SIG
CPUCLK
BCLK_EN
BCLK*
TYP
XACK*
RLOCK*
MBCTRL*(16:0)
MCE
BLOCK PATHNAME
cpubiu.impl/micro.bloc/multibus.bloc SHEET 2 OF 2
REV 0
GENERIC CPU-BIU
LOCATION CODE
XXXX-XXX-XXX
APPROVALS
GE Medical Systems
BUC - FRANCE
REVISIONS
DRAWING NO.
46-321384-S
FIRST MADE FOR ADVANTX
MADE BY S. CARTEREAU DATE 15-OCT-93
ISSUED JOHN DWYER DATE 29JUN93
PRINTS TO 404
SHT. NO. 11 CONT. ON SHT. NO. 12
MULTIBUS.BLOC : 2/2
See sheet 3

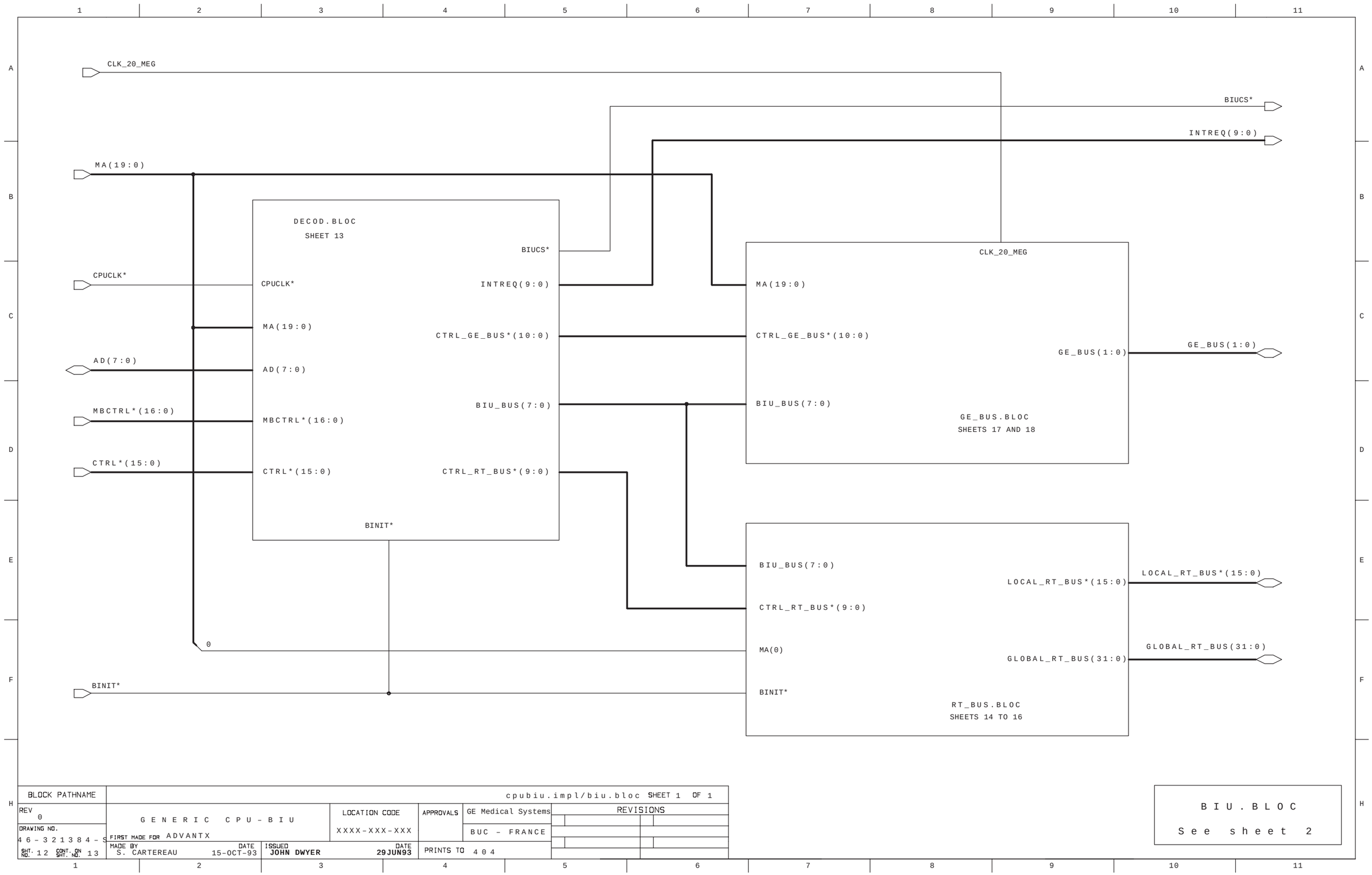
CLK_20_MEG
BIUCS*
INTREQ(9:0)
MA(19:0)
DECOD.BLOC
SHEET 13
BIUCS*
CPUCLK*
CPUCLK*
INTREQ(9:0)
MA(19:0)
CTRL_GE_BUS*(10:0)
AD(7:0)
AD(7:0)
MBCTRL*(16:0)
MBCTRL*(16:0)
BIU_BUS(7:0)
CTRL*(15:0)
CTRL*(15:0)
CTRL_RT_BUS*(9:0)
BINIT*
CLK_20_MEG
MA(19:0)
CTRL_GE_BUS*(10:0)
GE_BUS(1:0)
GE_BUS(1:0)
BIU_BUS(7:0)
GE_BUS.BLOC
SHEETS 17 AND 18
BIU_BUS(7:0)
LOCAL_RT_BUS*(15:0)
LOCAL_RT_BUS*(15:0)
CTRL_RT_BUS*(9:0)
0
MA(0)
GLOBAL_RT_BUS(31:0)
GLOBAL_RT_BUS(31:0)
BINIT*
BINIT*
RT_BUS.BLOC
SHEETS 14 TO 16
BLOCK PATHNAME
cpubiu.impl/biu.bloc SHEET 1 OF 1
REV 0
GENERIC CPU-BIU
LOCATION CODE
XXXX-XXX-XXX
APPROVALS
GE Medical Systems
BUC - FRANCE
REVISIONS
DRAWING NO.
46-321384-S
FIRST MADE FOR ADVANTX
SHT. NO. 12 CONT. ON SHT. NO. 13
MADE BY S. CARTEREAU DATE 15-OCT-93
ISSUED JOHN DWYER DATE 29JUN93
PRINTS TO 404
BIU.BLOC
See sheet 2

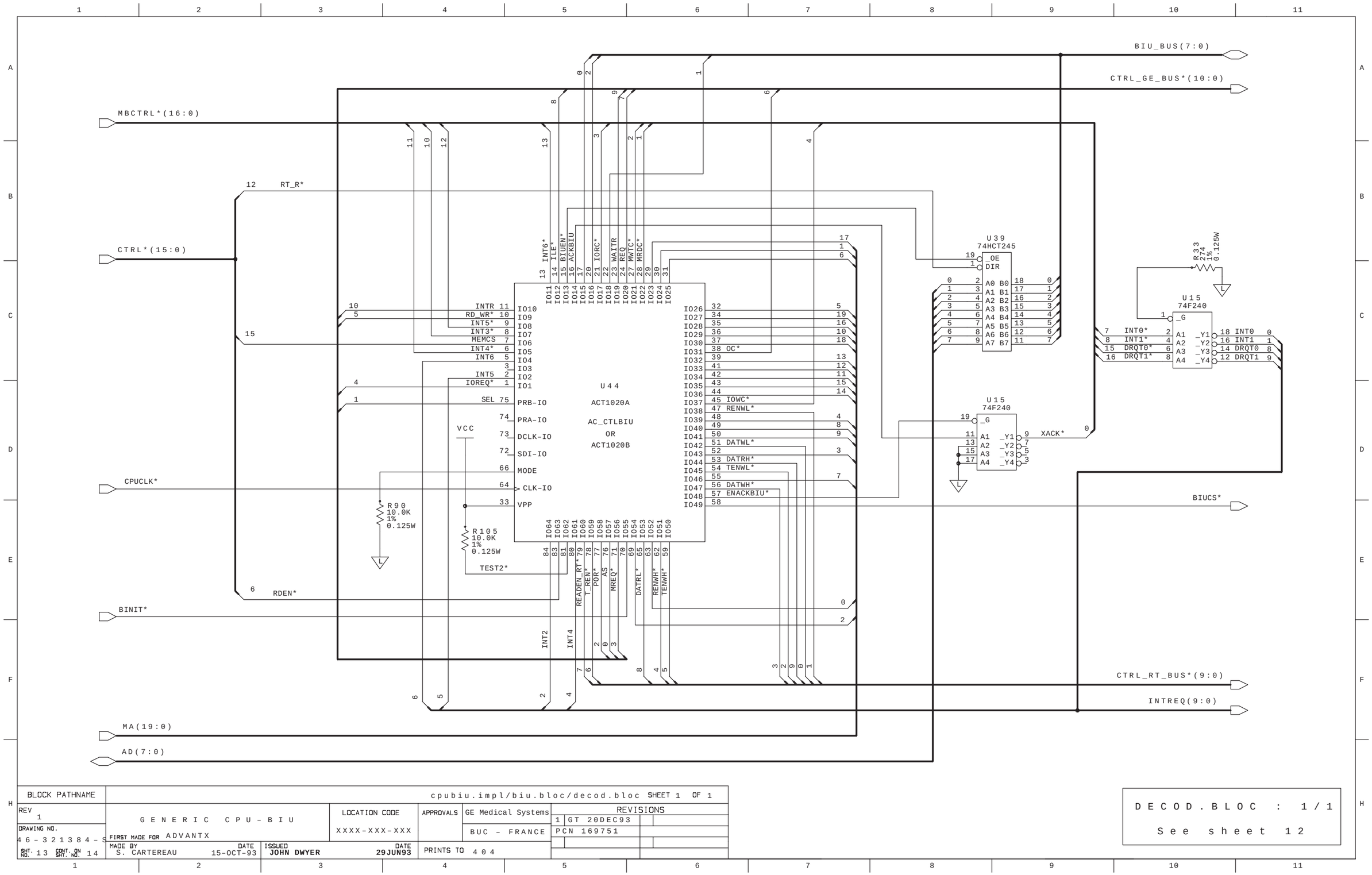

BLOCK PATHNAME	cpubiu.impl/biu.bloc/decod.bloc SHEET 1 OF 1				
REV 1	GENERIC CPU-BIU	LOCATION CODE XXXX-XXX-XXX	APPROVALS	GE Medical Systems	REVISIONS
DRAWING NO. 46-321384-S	FIRST MADE FOR ADVANTX			BUC - FRANCE	1 GT 20DEC93 / PCN 169751
SHT. NO. 13 CONT. ON SHT. NO. 14	MADE BY S. CARTEREAU DATE 15-OCT-93	ISSUED JOHN DWYER DATE 29JUN93	PRINTS TO 404		

DECOD.BLOC : 1/1

See sheet 12

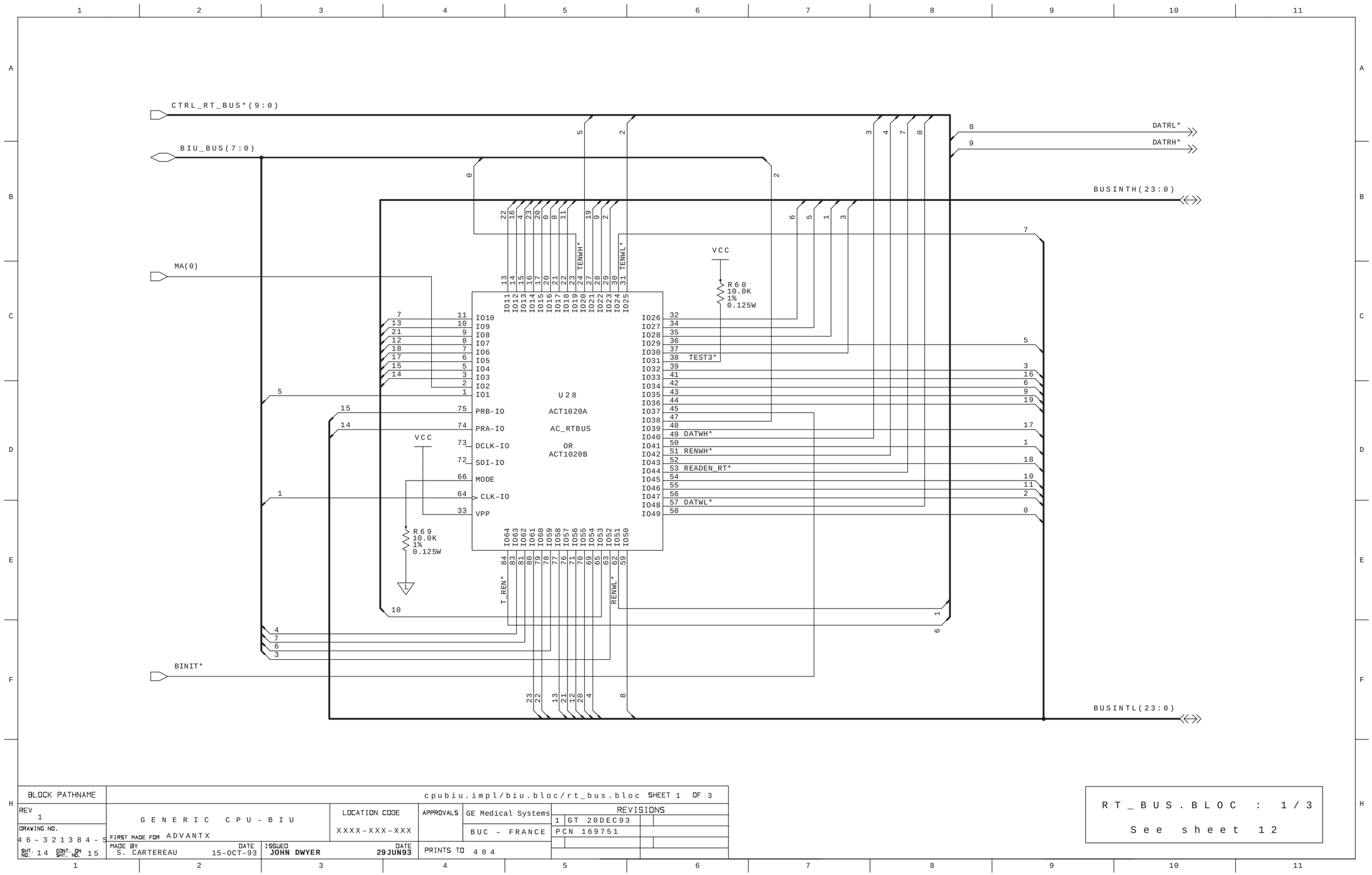

BLOCK PATHNAME	cpubiu.impl/biu.bloc/rt_bus.bloc SHEET 1 OF 3				
REV 1	GENERIC CPU-BIU	LOCATION CODE XXXX-XXX-XXX	APPROVALS	GE Medical Systems	REVISIONS: 1 GT 20DEC93; PCN 169751
DRAWING NO. 46-321384-S	FIRST MADE FOR ADVANTX			BUC - FRANCE	
SHT. NO. 14 CONT. ON SHT. NO. 15	MADE BY S. CARTEREAU DATE 15-OCT-93	ISSUED JOHN DWYER DATE 29JUN93	PRINTS TO 404		

RT_BUS.BLOC : 1/3

See sheet 12

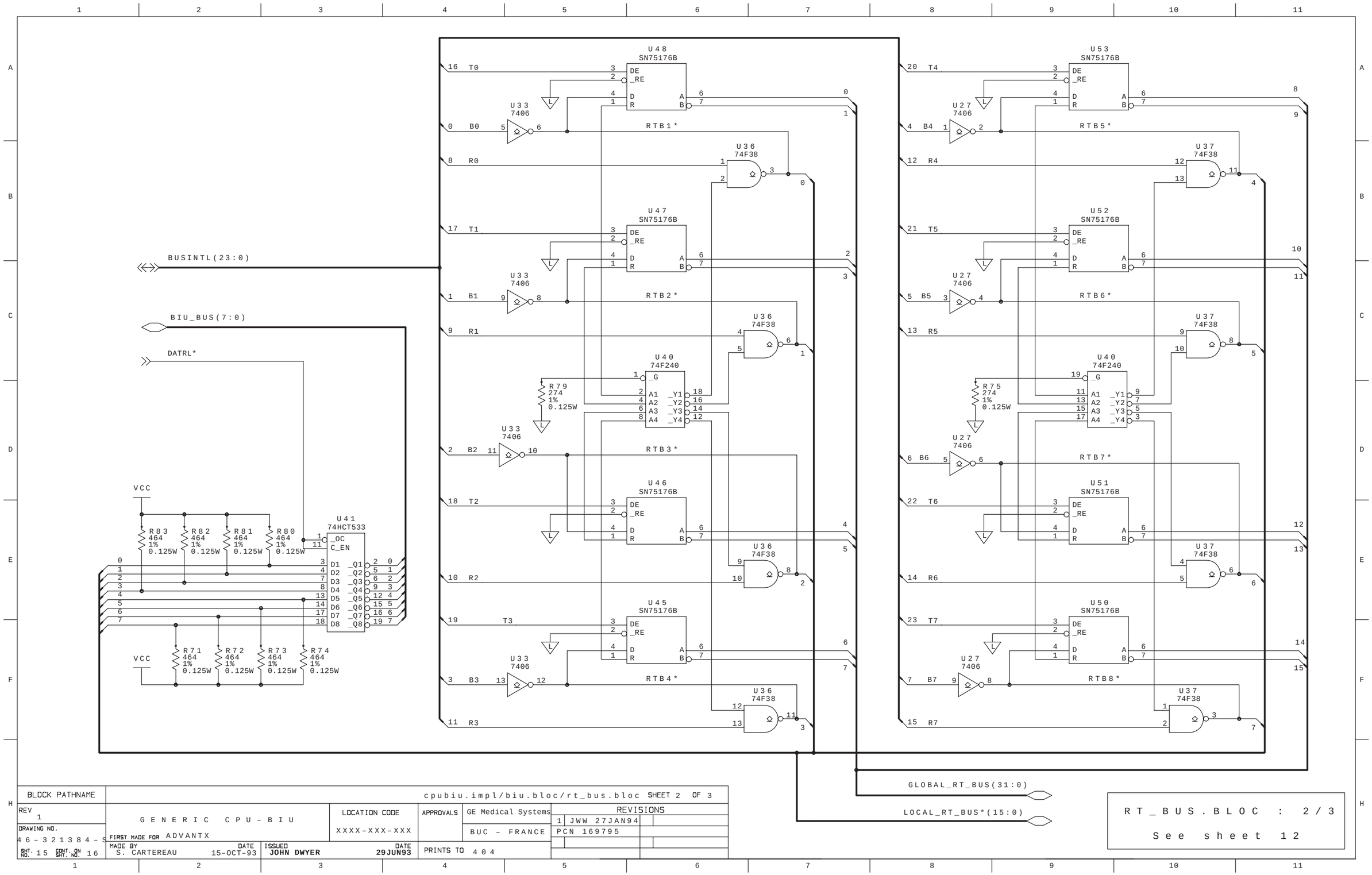

BLOCK PATHNAME	cpubiu.impl/biu.bloc/rt_bus.bloc SHEET 2 OF 3				
REV 1	GENERIC CPU-BIU	LOCATION CODE XXXX-XXX-XXX	APPROVALS	GE Medical Systems	REVISIONS
DRAWING NO. 46-321384-S	FIRST MADE FOR ADVANTX			BUC - FRANCE	1 JWW 27JAN94 PCN 169795
SHT. NO. 15 CONT. ON SHT. NO. 16	MADE BY S. CARTEREAU DATE 15-OCT-93	ISSUED JOHN DWYER DATE 29JUN93	PRINTS TO 404		

RT_BUS.BLOC : 2/3

See sheet 12

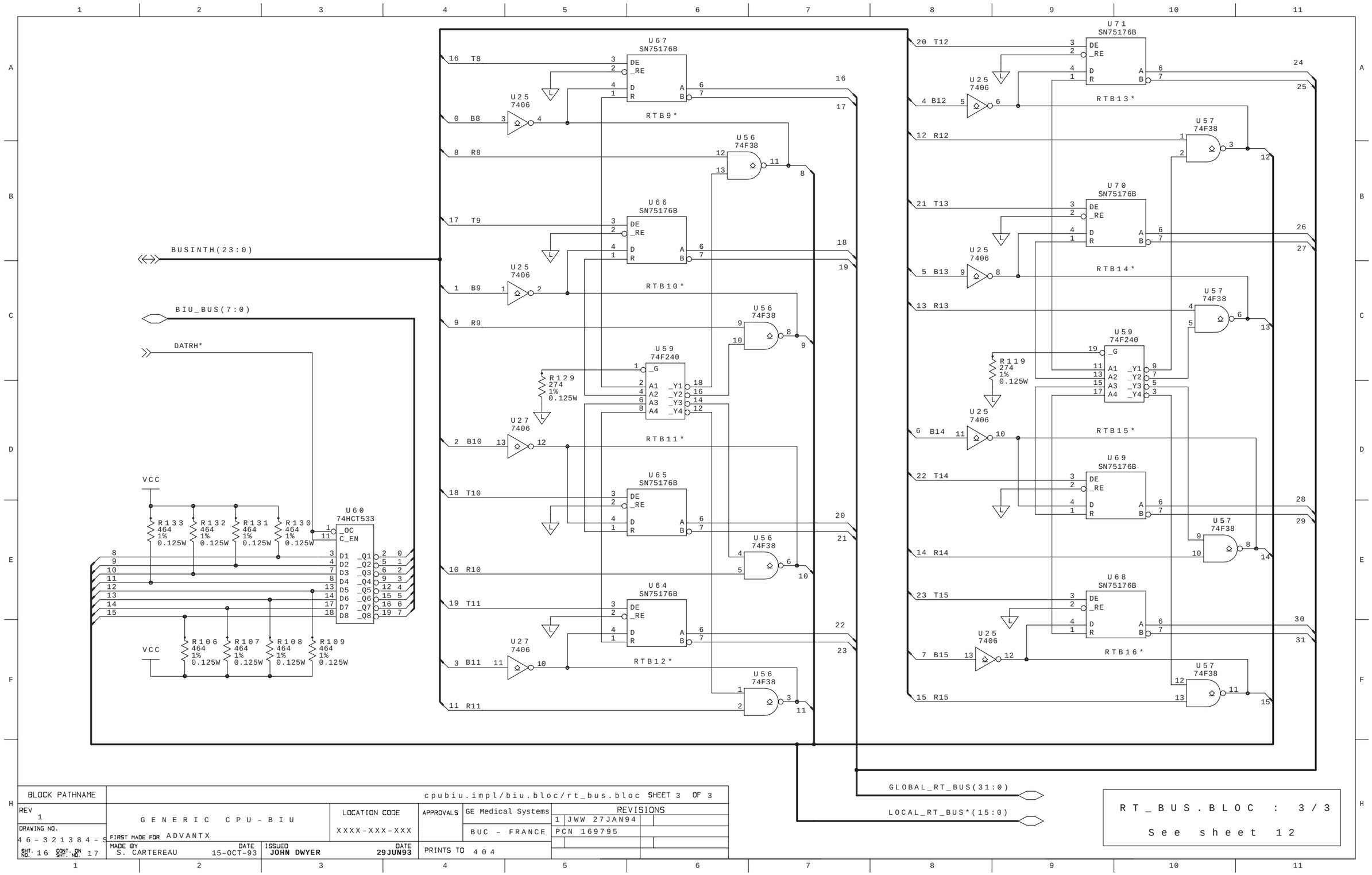

BLOCK PATHNAME	cpubiu.impl/biu.bloc/rt_bus.bloc SHEET 3 OF 3				
REV 1	GENERIC CPU-BIU	LOCATION CODE XXXX-XXX-XXX	APPROVALS	GE Medical Systems	REVISIONS
DRAWING NO. 46-321384-S	FIRST MADE FOR ADVANTX			BUC - FRANCE	1 JWW 27JAN94 / PCN 169795
SHT. NO. 16 CONT. ON SHT. NO. 17	MADE BY S. CARTEREAU DATE 15-OCT-93	ISSUED JOHN DWYER DATE 29JUN93	PRINTS TO 404		

RT_BUS.BLOC : 3/3

See sheet 12

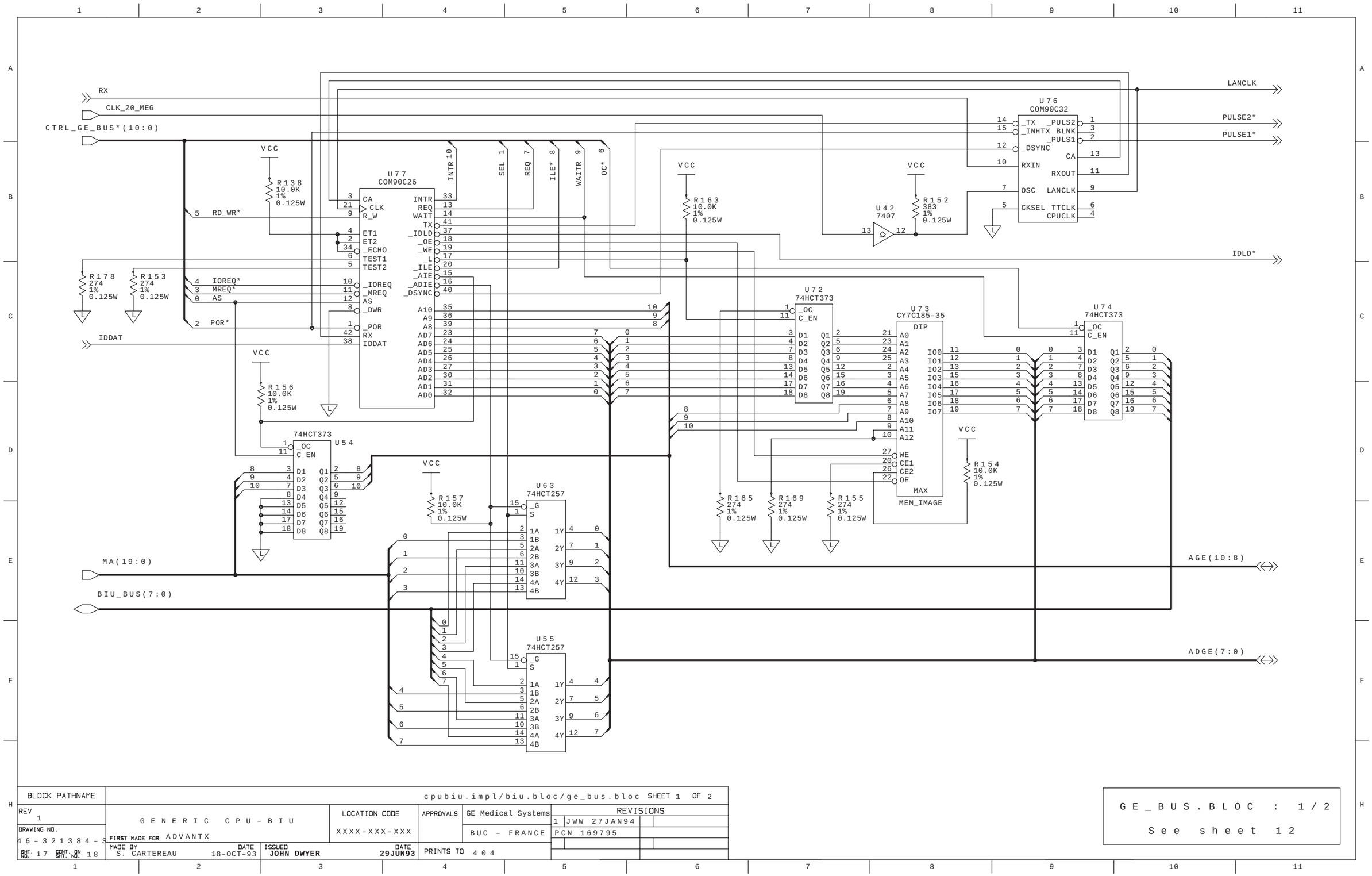

BLOCK PATHNAME	cpubiu.impl/biu.bloc/ge_bus.bloc SHEET 1 OF 2				
REV 1	GENERIC CPU-BIU	LOCATION CODE XXXX-XXX-XXX	APPROVALS	GE Medical Systems	REVISIONS
DRAWING NO. 46-321384-S	FIRST MADE FOR ADVANTX			BUC - FRANCE	1 JWW 27JAN94 / PCN 169795
SHT. NO. 17 CONT. ON SHT. NO. 18	MADE BY S. CARTEREAU DATE 18-OCT-93	ISSUED JOHN DWYER DATE 29JUN93		PRINTS TO 404	

GE_BUS.BLOC : 1/2

See sheet 12

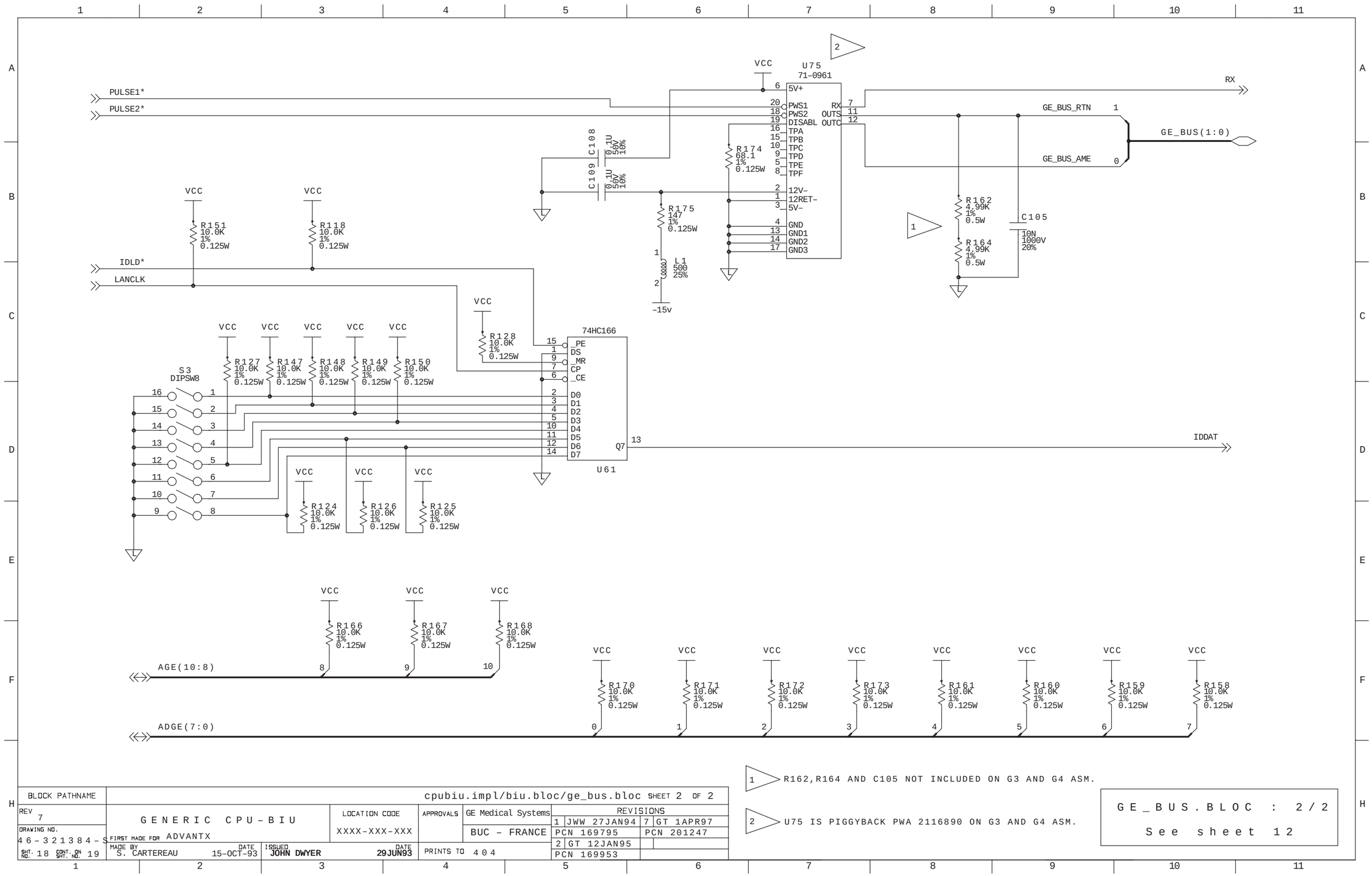

BLOCK PATHNAME	cpubiu.impl/biu.bloc/ge_bus.bloc SHEET 2 OF 2				
REV 7	GENERIC CPU-BIU	LOCATION CODE XXXX-XXX-XXX	APPROVALS	GE Medical Systems	REVISIONS: 1 JWW 27JAN94; 7 GT 1APR97; PCN 169795; PCN 201247; 2 GT 12JAN95; PCN 169953
DRAWING NO. 46-321384-S	FIRST MADE FOR ADVANTX			BUC - FRANCE	
SHT. NO. 18 CONT. ON SHT. NO. 19	MADE BY S. CARTEREAU DATE 15-OCT-93	ISSUED JOHN DWYER DATE 29JUN93	PRINTS TO 404		

1 R162,R164 AND C105 NOT INCLUDED ON G3 AND G4 ASM.

2 U75 IS PIGGYBACK PWA 2116890 ON G3 AND G4 ASM.

GE_BUS.BLOC : 2/2

See sheet 12

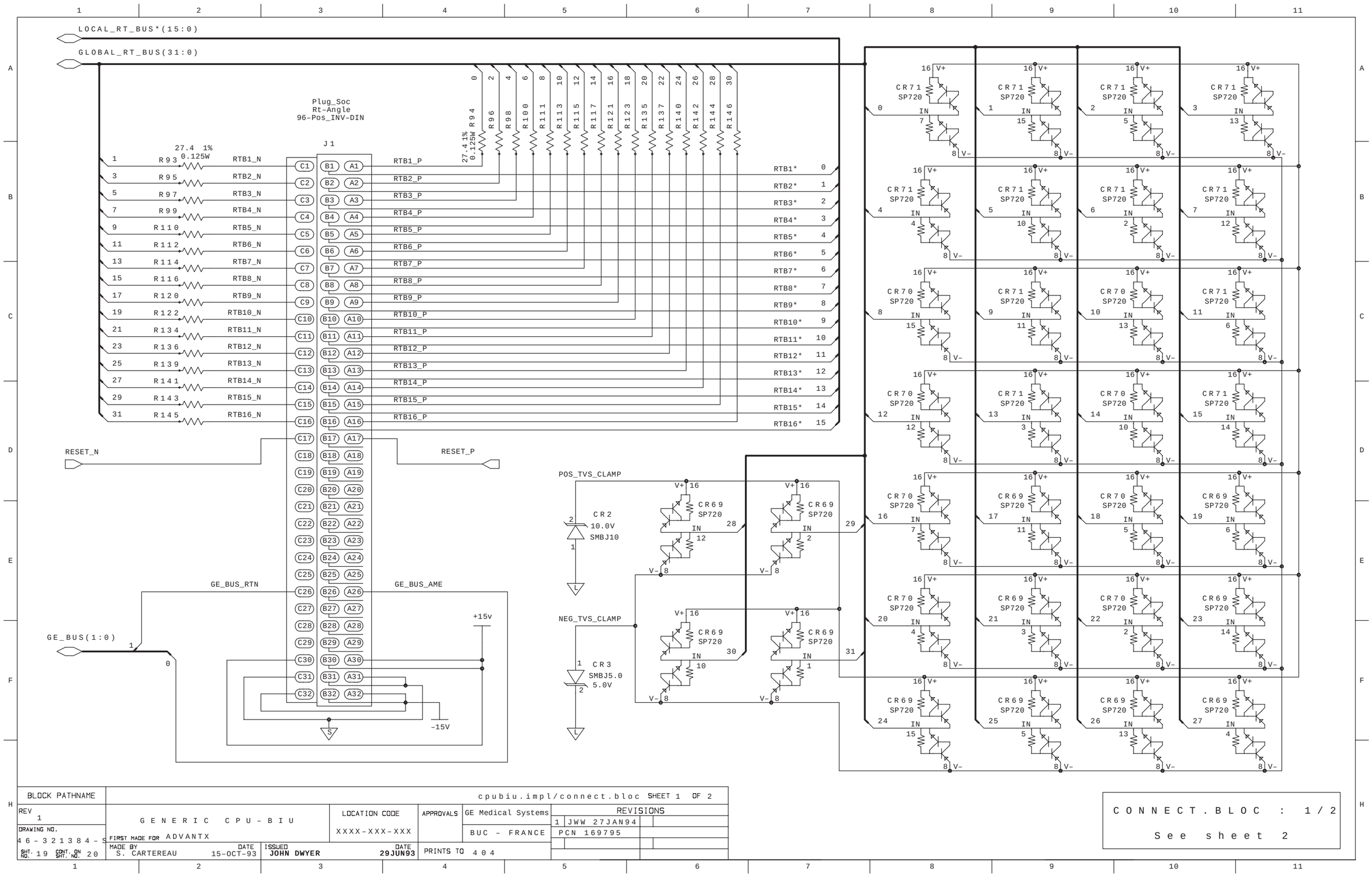

BLOCK PATHNAME	cpubiu.impl/connect.bloc SHEET 1 OF 2				
REV 1	GENERIC CPU-BIU	LOCATION CODE XXXX-XXX-XXX	APPROVALS	GE Medical Systems	REVISIONS
DRAWING NO. 46-321384-S	FIRST MADE FOR ADVANTX			BUC - FRANCE	1 JWW 27JAN94
SHT. NO. 19 CONT. ON SHT. NO. 20	MADE BY S. CARTEREAU DATE 15-OCT-93	ISSUED JOHN DWYER DATE 29JUN93	PRINTS TO 404		PCN 169795

CONNECT.BLOC : 1/2

See sheet 2

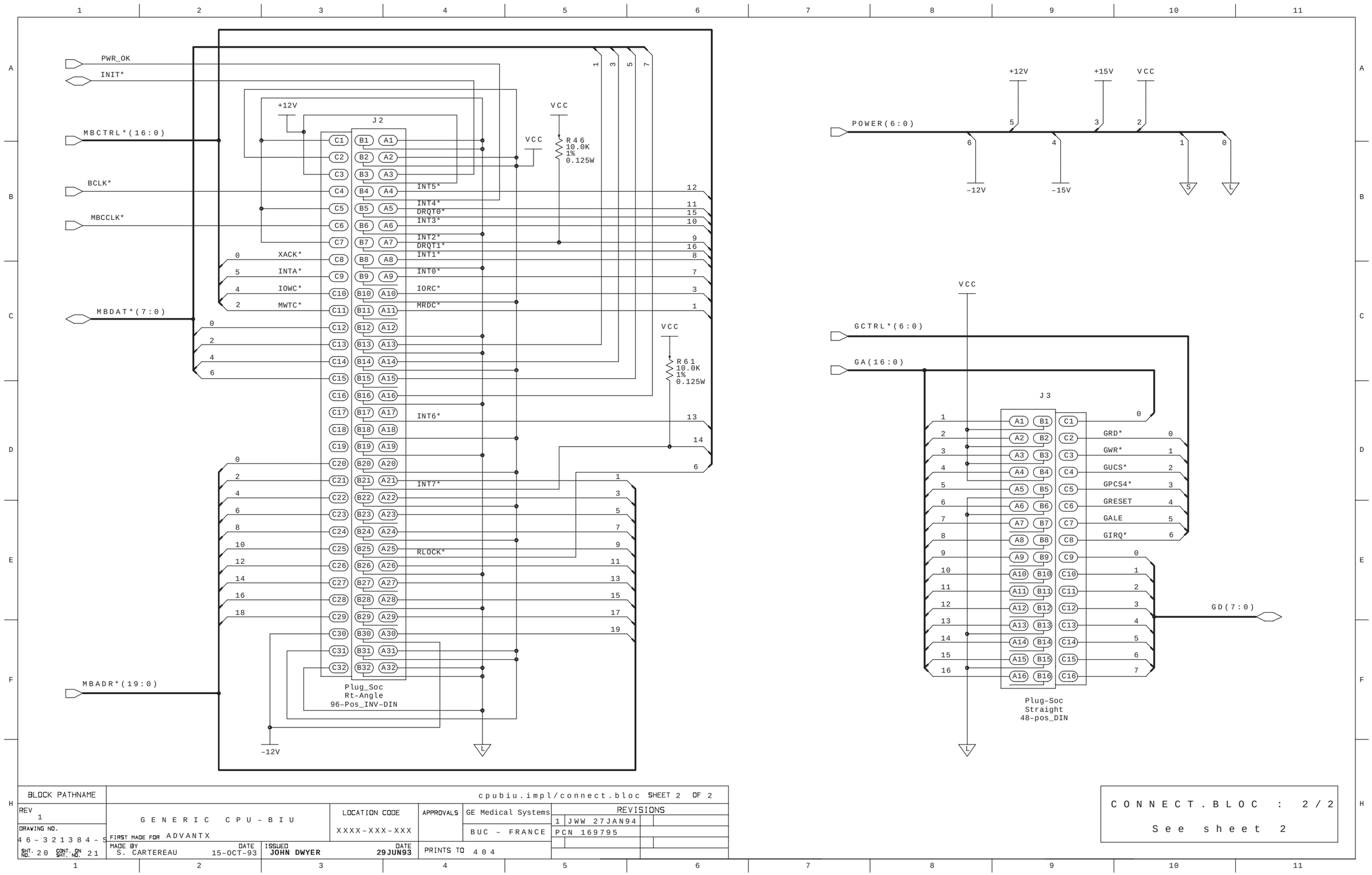

BLOCK PATHNAME	cpubiu.impl/connect.bloc SHEET 2 OF 2				
REV 1	G E N E R I C C P U - B I U	LOCATION CODE XXXX-XXX-XXX	APPROVALS	GE Medical Systems	REVISIONS
DRAWING NO. 46-321384-S	FIRST MADE FOR ADVANTX			BUC - FRANCE	1 JWW 27JAN94
SHT. NO. 20 CONT. ON SHT. NO. 21	MADE BY S. CARTEREAU DATE 15-OCT-93	ISSUED JOHN DWYER DATE 29JUN93	PRINTS TO 404		PCN 169795

C O N N E C T . B L O C : 2 / 2

S e e s h e e t 2

FRONTAL POSITIONER RACK

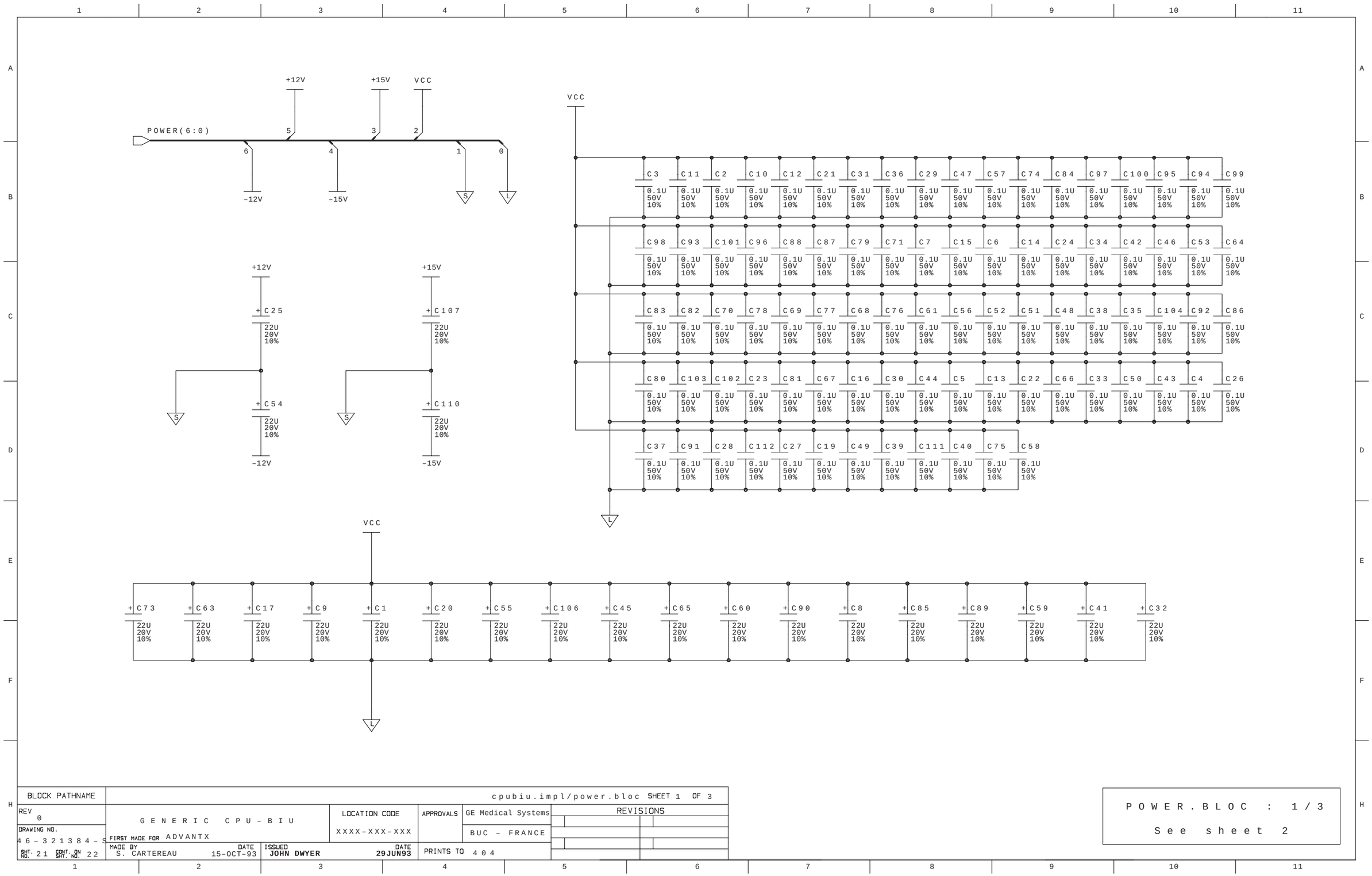

BLOCK PATHNAME	cpubiu.impl/power.bloc SHEET 1 OF 3				
REV 0	GENERIC CPU-BIU	LOCATION CODE XXXX-XXX-XXX	APPROVALS	GE Medical Systems	REVISIONS
DRAWING NO. 46-321384-S	FIRST MADE FOR ADVANTX			BUC - FRANCE	
SHT. NO. 21 CONT. ON SHT. NO. 22	MADE BY S. CARTEREAU DATE 15-OCT-93	ISSUED JOHN DWYER DATE 29JUN93	PRINTS TO 404		

POWER.BLOC : 1/3

See sheet 2

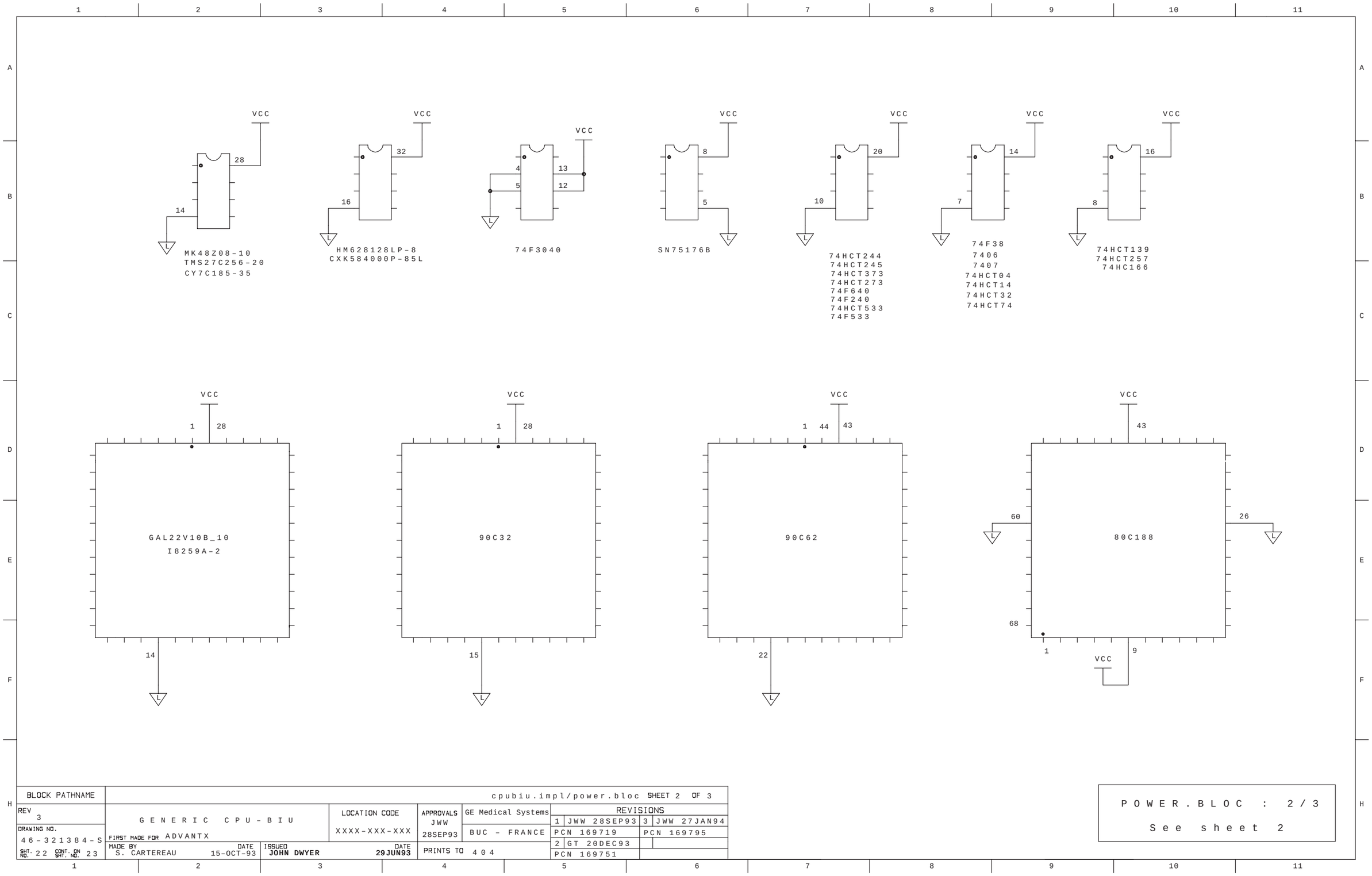

BLOCK PATHNAME	cpubiu.impl/power.bloc SHEET 2 OF 3					
REV 3	GENERIC CPU-BIU	LOCATION CODE XXXX-XXX-XXX	APPROVALS JWW 28SEP93	GE Medical Systems	REVISIONS	
DRAWING NO. 46-321384-S	FIRST MADE FOR ADVANTX			BUC - FRANCE	1 JWW 28SEP93 PCN 169719	3 JWW 27JAN94 PCN 169795
SHT. NO. 22 CONT. ON SHT. NO. 23	MADE BY S. CARTEREAU DATE 15-OCT-93	ISSUED JOHN DWYER DATE 29JUN93	PRINTS TO 404		2 GT 20DEC93 PCN 169751	

POWER.BLOC : 2/3

See sheet 2

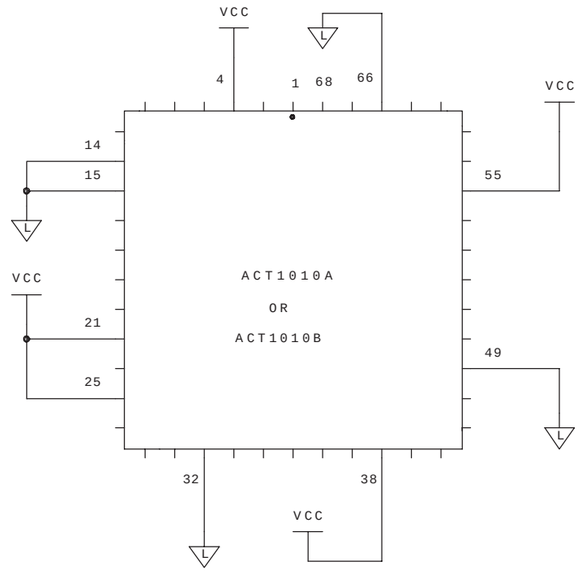

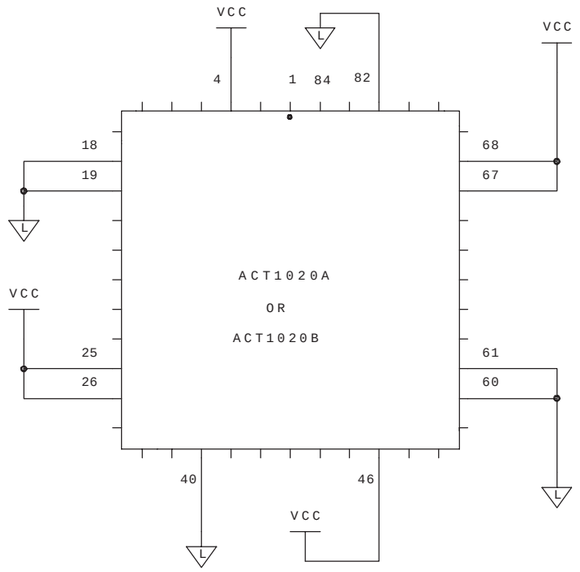

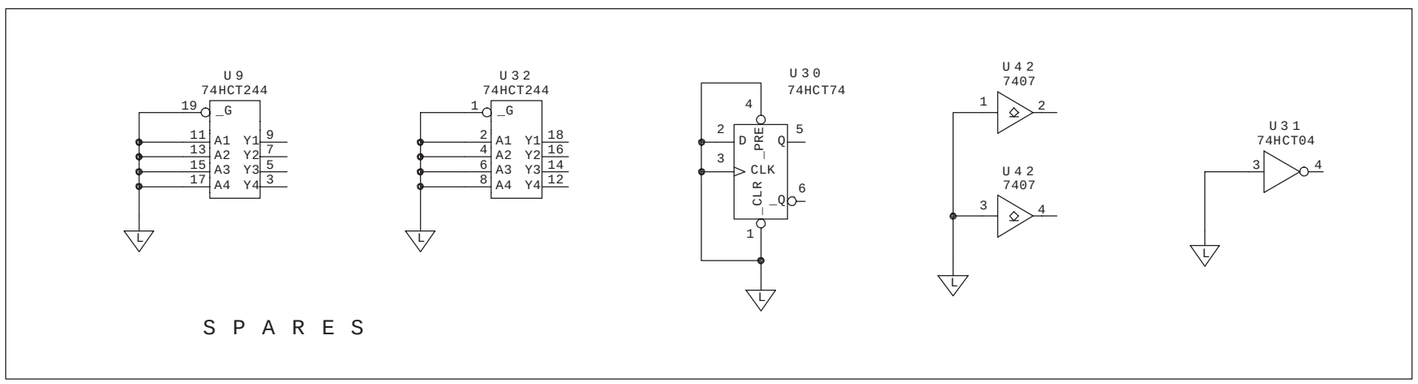

BLOCK PATHNAME	cpubiu.impl/power.bloc SHEET 3 OF 3				
REV 1	GENERIC CPU-BIU	LOCATION CODE	APPROVALS	GE Medical Systems	REVISIONS
DRAWING NO. 46-321384-S	FIRST MADE FOR ADVANTX	XXXX-XXX-XXX		BUC - FRANCE	1 GT 20DEC93
SHT. NO. 23 CONT. ON SHT. NO. -	MADE BY S. CARTEREAU DATE 15-OCT-93	ISSUED JOHN DWYER DATE 29JUN93	PRINTS TO 404		PCN 169751

POWER.BLOC : 3/3

See sheet 2

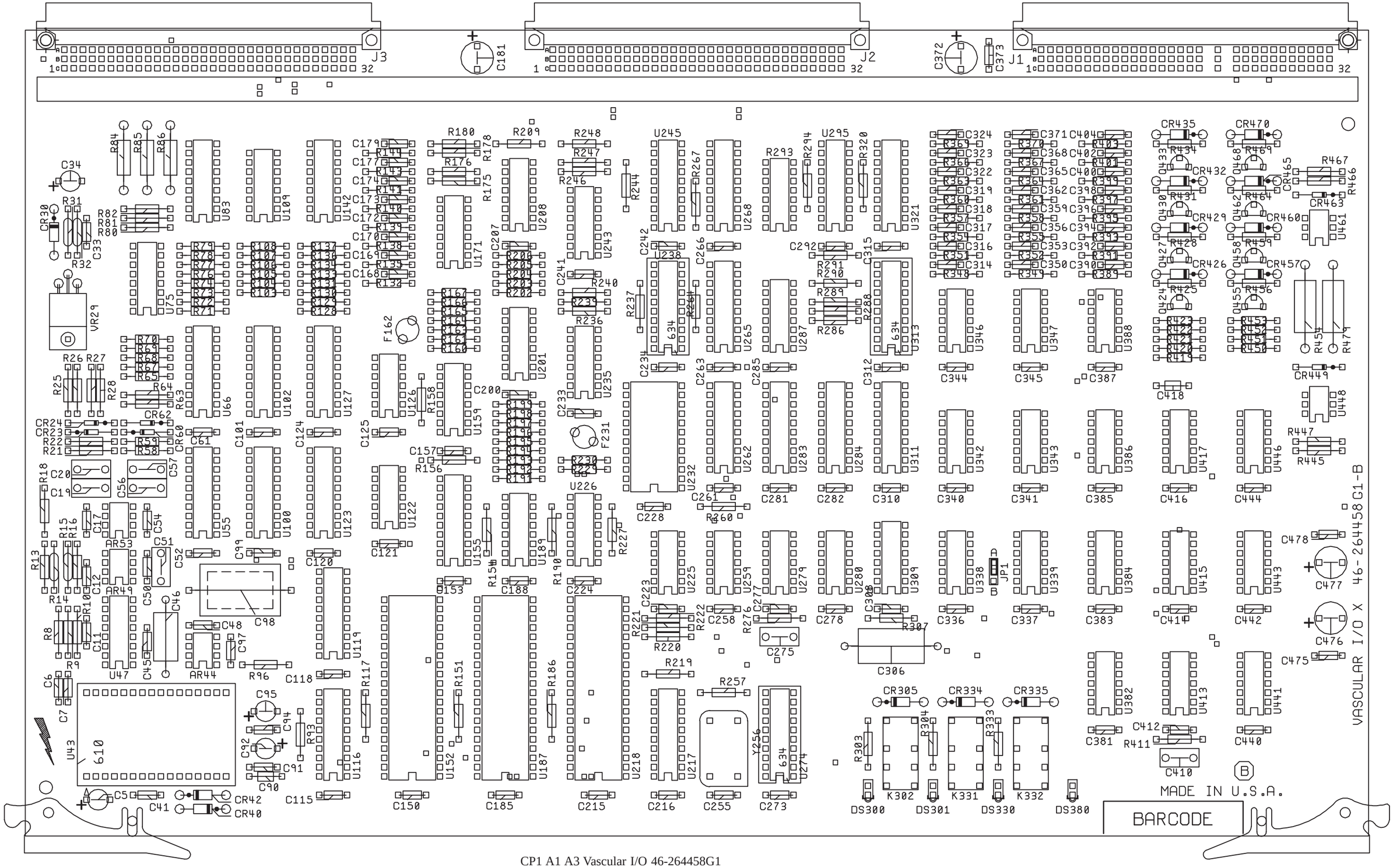

CP1 A1 A3 Vascular I/O 46-264458G1

GENERAL ELECTRIC — 46–264458–S — CONT ON SHEET 2 — SH NO. 1

TITLE: SCHEMATIC DIAGRAM VASCULAR–I/O — FIRST MADE FOR: LUM — P/L ISSUED: 46–264458G1–C

REV 5 — 46–264458–S — CONT ON SHEET 2 — SH NO. 1

UNLESS OTHERWISE SPECIFIED USE THFOLLOWING : –
APPLIED PRACTICES: 46–208600 — SURFACES: ✓ — TOLERANCES ON DIMENSIONS: DECIMALS (2 PLACES) ± .– — DECIMALS (3 PLACES) ± .– — ANGLES ±

VP1 A1 A3
CP1 A1 A3

SHEET 1. BLOCK DIAGRAM

SH3. MULTIBUS INTERFACE & INPUT PORT 0 & 1

DATA BUS — DAT0*–DAT7* — XCVR'S — DAT0–DAT7 ON BOARD DATA BUS

CCLK*, IORC*, IOWC*, XACK*, INIT* — BUFFERS — BUS CONTROL LOGIC — BINIT*

ADDRESS BUS — ADR4*–ADRF* — BUFFERS & HI ADD. DECODE — UARTS*, WREN*, RDEN*

ADR0*–ADR3* — BUFFERS & LOW ADD DECODE — PWRITE(0..5)*, PREAD(0..E)*, 4 — UART–A0,..A3

ON BOARD DATA BUS

PRTWR0*, BINIT* — LATCH PORT DEA0 — DRIVERS
- TBL DR EN1*
- TBL DR EN2*
- SC1 FRTL DR EN*
- SC1 LAT DR EN*
- SC2 FRTL DR EN*
- SC2 LAT DR EN*
- MULTIAXIS DR EN*
- AUTOPOS DR EN*

PRTRD0* — READ–BACK PORT DEA0

PRTWR1*, BINIT* — LATCH PORT DEA1 — DRIVERS
- L+90–90 DR*
- LAT FC PARKED DR*
- SPARE
- TBL SHIFT CMPL DR*
- FC PRGM LOCK DR*
- FC PREP CMND DR*
- FC RUN CMND DR*
- FC START DR*

PRTRD1* — READ–BACK PORT DEA1 — PT–D20, MUX A0, PT–D40, PT–D50, JUM POS

DAT0–DAT7

PRTWR4*, BINIT* — LATCH PORT DEA4 — DAT0–DAT7
- PNP DR → EXP REQ 0
- PNP DR → EXP REQ 1
- PNP DR → EXP REQ 2
- PNP DR → EXP REQ 3
- PNP DR → EXP REQ 4
- PNP DR → PREP REQ 0
- PNP DR → PREP REQ 1
- PNP DR → PREP REQ 2

PRTWR2*, BINIT* — LATCH PORT DEA2 — DAT0–DAT7 — DRIVERS
- K231
- K251
- TBL FWD STEP DR*
- TBL REV STEP DR*
- INJ START DR*
- INJ INHIB DR*

PHYS TRIG EN [SH.8]
PHYS TRIG INVT [SH.8]

SH5.INPUT PORTS 8,9,A.

TBL FWD STEP CMND
TBL REV STEP CMND
TT ROTATNL CNTR
TT LAT CNTR
FC FRTL PLANE SEL
FC LAT PLANE SEL
FC RDY
FC INJ START REQ
→ RCVR'S → BUFFERS PORT DEA8 → DAT0–DAT7 → PRTRD8*

+24VDC

SC1 FRTL DR REQ
SC1 LAT DR REQ
SC2 FRTL DR REQ
SC2 LAT DR REQ
MULTIAXIS DR REQ
AUTOPOS DR REQ
TABLE SPARE 1
TABLE SPARE 2
→ RCVR'S → BUFFERS PORT DEA9 → DAT0–DAT7 → PRTRD9*

STPR ON
STPR ENGAGED
STPR NOT RDY
TBL TOP POS0
TBL TOP POS1
TBL TOP POS2
TBL TOP POS3
TBL TOP POS4
→ RCVR'S → BUFFERS PORT DEAA → DAT0–DAT7 → PRTRDA*

TO SH.6,7 & 8

SH4. OUTPUT PORTS 2,3,4 & 5

DAT0–DAT7 ON BOARD DATA BUS

PRTWR3*, BINIT* — LATCH PORT DEA3 — DAT0–DAT7 — DRIVERS
- JUMPER RDY
- RM WARN LITE DR*
- PWR CONTACTOR DR*

PRTWR5*, BINIT* — LATCH PORT DEA5 — DAT0–DAT7
- RT BUS IN EN
- RT BUS OUT EN
- FC EXP TEST
- FC FIP TEST
- PHYS TRIG TEST

DRIVERS
- FRTL LMP DR*
- LAT LMP DR*
- BP LMP DR*

+24VDC — K302 — PREP SW
+24V KERNEL
K331 — PREP SW–FRTL SYST BUS
K302 — K332 — EXP SW–SYST BUS
24V RTN KERNEL

THE REVISION NUMBER OF THIS SHEET IS THE CONTROL NUMBER OF THIS ENTIRE DOCUMENT. THIS REVISION NUMBER MUST INCREASE WHENEVER ANY SHEET IS CHANGED.

PCN #	169896	–	146702	146977	169027	169852
DATE / SHT	26OCT94	–	10MAY89	20AUG90	10DEC90	7JUN94
2	2	–	1	1	1	1
3	3	–	1	1	1	2
4	3	–	1	1	2	2
5	1	–	1	1	1	1
6	1	–	1	1	1	1
7	1	–	1	1	1	1
8	3	–	1	1	2	2
9	2	–	1	1	1	1
10	1	–	1	1	1	1
11	1	–	1	1	1	1

REVISIONS				PRINTS TO
4	CLD_6JUN94	1	FEP_10MAY89	404
PCN_169852		PCN_146702		
5	CLD_26OCT94	2	GJO_20AUG90	
PCN_169896		PCN_146977		
		3	DRL_10DEC90	
		PCN_169027		

MADE BY: C.GILLING — ISSUED: C.GILLING 1-30-89 — APPROVALS: RCB 4/1/89 — MEDICALSYSTEMS MILWAUKEE,WISCONSIN — DIV OR DEPT — LOCATION

46–264458–S — CONT ON SHEET 2 — SH NO. 1

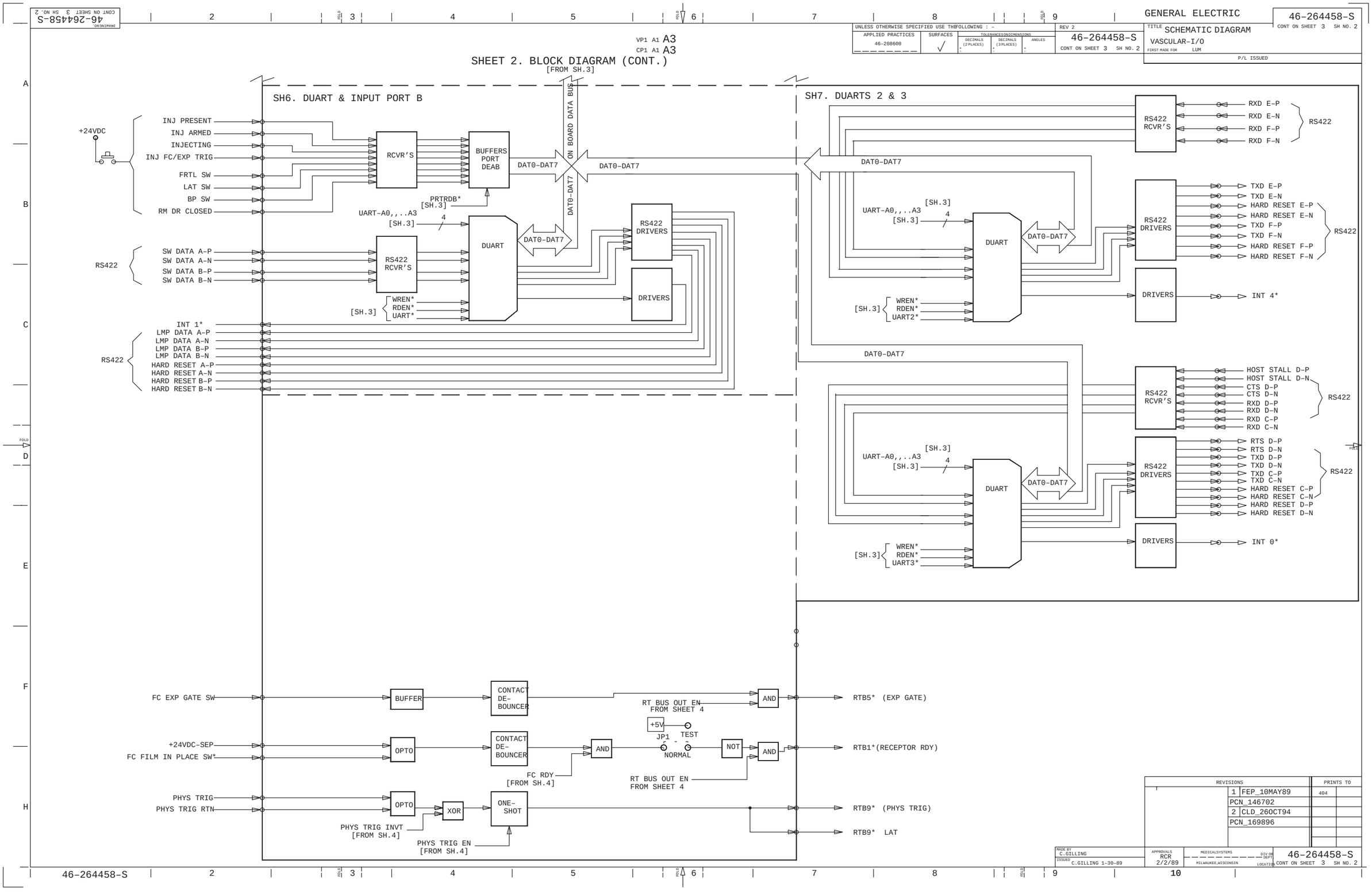
GENERAL ELECTRIC
46-264458-S
CONT ON SHEET 3 SH NO. 2
TITLE SCHEMATIC DIAGRAM
VASCULAR-I/O
FIRST MADE FOR LUM
P/L ISSUED
REV 2
UNLESS OTHERWISE SPECIFIED USE THE FOLLOWING : -
APPLIED PRACTICES 46-208600
SURFACES √
TOLERANCES ON DIMENSIONS
DRAWING NO. 46-264458-S
CONT ON SHEET 3 SH NO. 2
VP1 A1 A3
CP1 A1 A3
SHEET 2. BLOCK DIAGRAM (CONT.)
[FROM SH.3]
SH6. DUART & INPUT PORT B
SH7. DUARTS 2 & 3
ON BOARD DATA BUS
DAT0–DAT7
+24VDC
INJ PRESENT
INJ ARMED
INJECTING
INJ FC/EXP TRIG
FRTL SW
LAT SW
BP SW
RM DR CLOSED
RCVR'S
BUFFERS PORT DEAB
PRTRDB* [SH.3]
UART–A0,,,.A3 [SH.3] 4
DUART
RS422 RCVR'S
RS422 DRIVERS
DRIVERS
RS422
SW DATA A–P
SW DATA A–N
SW DATA B–P
SW DATA B–N
WREN*
RDEN*
UART*
[SH.3]
INT 1*
LMP DATA A–P
LMP DATA A–N
LMP DATA B–P
LMP DATA B–N
HARD RESET A–P
HARD RESET A–N
HARD RESET B–P
HARD RESET B–N
RXD E–P
RXD E–N
RXD F–P
RXD F–N
TXD E–P
TXD E–N
HARD RESET E–P
HARD RESET E–N
TXD F–P
TXD F–N
HARD RESET F–P
HARD RESET F–N
INT 4*
UART2*
HOST STALL D–P
HOST STALL D–N
CTS D–P
CTS D–N
RXD D–P
RXD D–N
RXD C–P
RXD C–N
RTS D–P
RTS D–N
TXD D–P
TXD D–N
TXD C–P
TXD C–N
HARD RESET C–P
HARD RESET C–N
HARD RESET D–P
HARD RESET D–N
INT 0*
UART3*
FC EXP GATE SW
BUFFER
CONTACT DE–BOUNCER
RT BUS OUT EN FROM SHEET 4
AND
RTB5* (EXP GATE)
+24VDC–SEP
FC FILM IN PLACE SW*
OPTO
+5V
JP1
TEST
NORMAL
NOT
RTB1*(RECEPTOR RDY)
FC RDY [FROM SH.4]
PHYS TRIG
PHYS TRIG RTN
XOR
ONE–SHOT
PHYS TRIG INVT [FROM SH.4]
PHYS TRIG EN [FROM SH.4]
RTB9* (PHYS TRIG)
RTB9* LAT
REVISIONS
1 FEP_10MAY89
PCN_146702
2 CLD_26OCT94
PCN_169896
PRINTS TO 404
MADE BY C.GILLING
ISSUED C.GILLING 1-30-89
APPROVALS RCR 2/2/89
MEDICALSYSTEMS MILWAUKEE,WISCONSIN
DIV OR DEPT
LOCATION
46-264458-S
CONT ON SHEET 3 SH NO. 2
46-264458-S

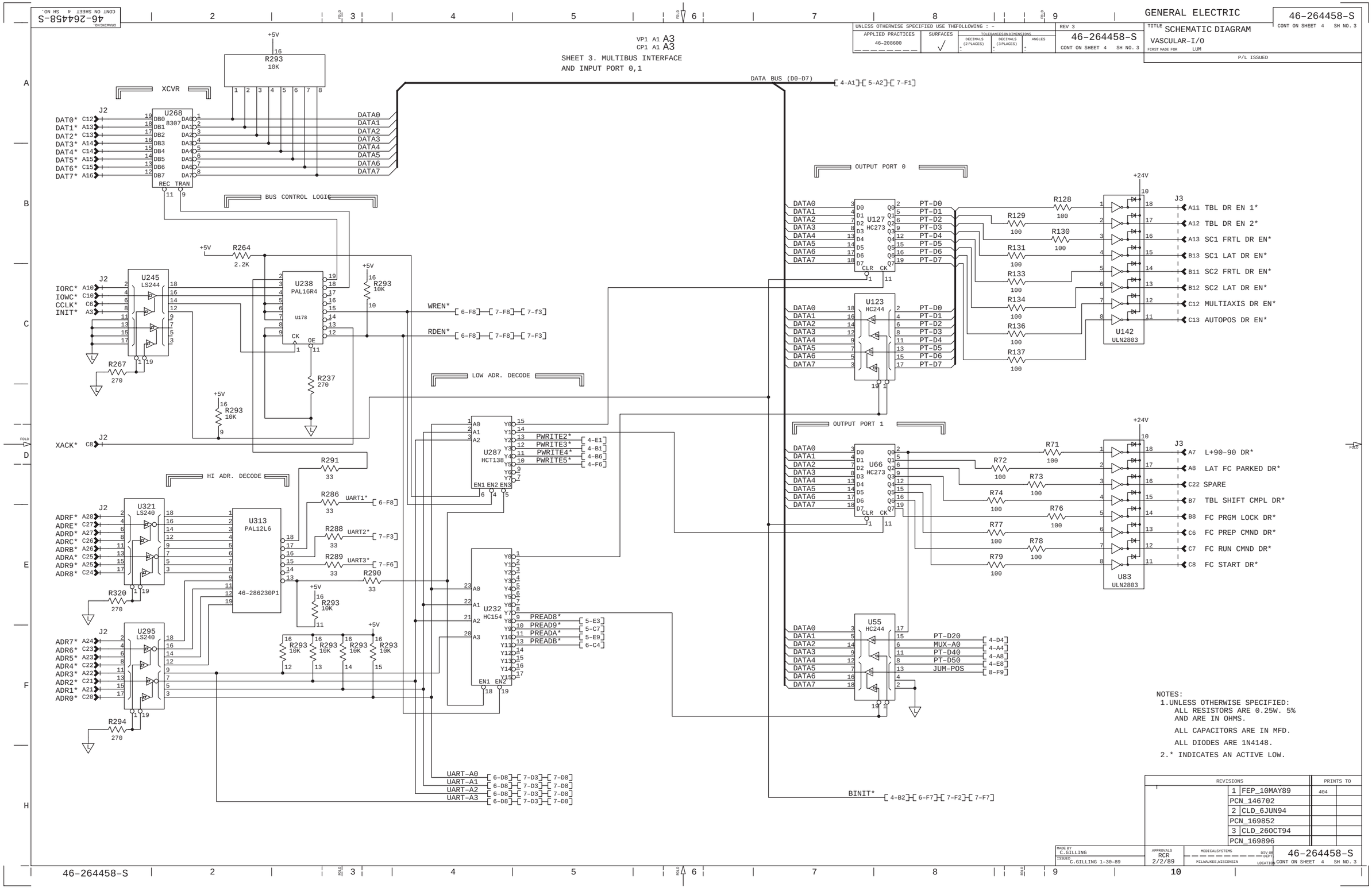
GENERAL ELECTRIC
46–264458–S
CONT ON SHEET 4 SH NO. 3
TITLE SCHEMATIC DIAGRAM
VASCULAR–I/O
FIRST MADE FOR LUM
P/L ISSUED
REV 3
46–264458–S
CONT ON SHEET 4 SH NO. 3
UNLESS OTHERWISE SPECIFIED USE THFOLLOWING : –
APPLIED PRACTICES 46–208600
SURFACES
TOLERANCES ON DIMENSIONS
DECIMALS (2 PLACES) ± .
DECIMALS (3 PLACES) ± .
ANGLES ±
VP1 A1 A3
CP1 A1 A3
SHEET 3. MULTIBUS INTERFACE
AND INPUT PORT 0,1
DATA BUS (D0–D7)
XCVR
BUS CONTROL LOGIC
LOW ADR. DECODE
HI ADR. DECODE
OUTPUT PORT 0
OUTPUT PORT 1
U268 8307
U245 LS244
U238 PAL16R4
U178
U287 HCT138
U321 LS240
U313 PAL12L6
46–286230P1
U295 LS240
U232 HC154
U127 HC273
U123 HC244
U66 HC273
U55 HC244
U142 ULN2803
U83 ULN2803
J2
J3
R293 10K
R264 2.2K
R267 270
R237 270
R291 33
R286 33
R288 33
R289 33
R290 33
R320 270
R294 270
R128 100
R129 100
R130 100
R131 100
R133 100
R134 100
R136 100
R137 100
R71 100
R72 100
R73 100
R74 100
R76 100
R77 100
R78 100
R79 100
WREN*
RDEN*
XACK*
BINIT*
UART–A0
UART–A1
UART–A2
UART–A3
PWRITE2*
PWRITE3*
PWRITE4*
PWRITE5*
PREAD8*
PREAD9*
PREADA*
PREADB*
PT–D0
PT–D1
PT–D2
PT–D3
PT–D4
PT–D5
PT–D6
PT–D7
PT–D20
MUX–A0
PT–D40
PT–D50
JUM–POS
A11 TBL DR EN 1*
A12 TBL DR EN 2*
A13 SC1 FRTL DR EN*
B13 SC1 LAT DR EN*
B11 SC2 FRTL DR EN*
B12 SC2 LAT DR EN*
C12 MULTIAXIS DR EN*
C13 AUTOPOS DR EN*
A7 L+90–90 DR*
A8 LAT FC PARKED DR*
C22 SPARE
B7 TBL SHIFT CMPL DR*
B8 FC PRGM LOCK DR*
C6 FC PREP CMND DR*
C7 FC RUN CMND DR*
C8 FC START DR*
NOTES:
1.UNLESS OTHERWISE SPECIFIED:
ALL RESISTORS ARE 0.25W. 5%
AND ARE IN OHMS.
ALL CAPACITORS ARE IN MFD.
ALL DIODES ARE 1N4148.
2.* INDICATES AN ACTIVE LOW.
REVISIONS
PRINTS TO
1 FEP_10MAY89
PCN_146702
2 CLD_6JUN94
PCN_169852
3 CLD_26OCT94
PCN_169896
MADE BY C.GILLING
ISSUED C.GILLING 1–30–89
APPROVALS RCR 2/2/89
MEDICALSYSTEMS MILWAUKEE,WISCONSIN
46–264458–S
CONT ON SHEET 4 SH NO. 3

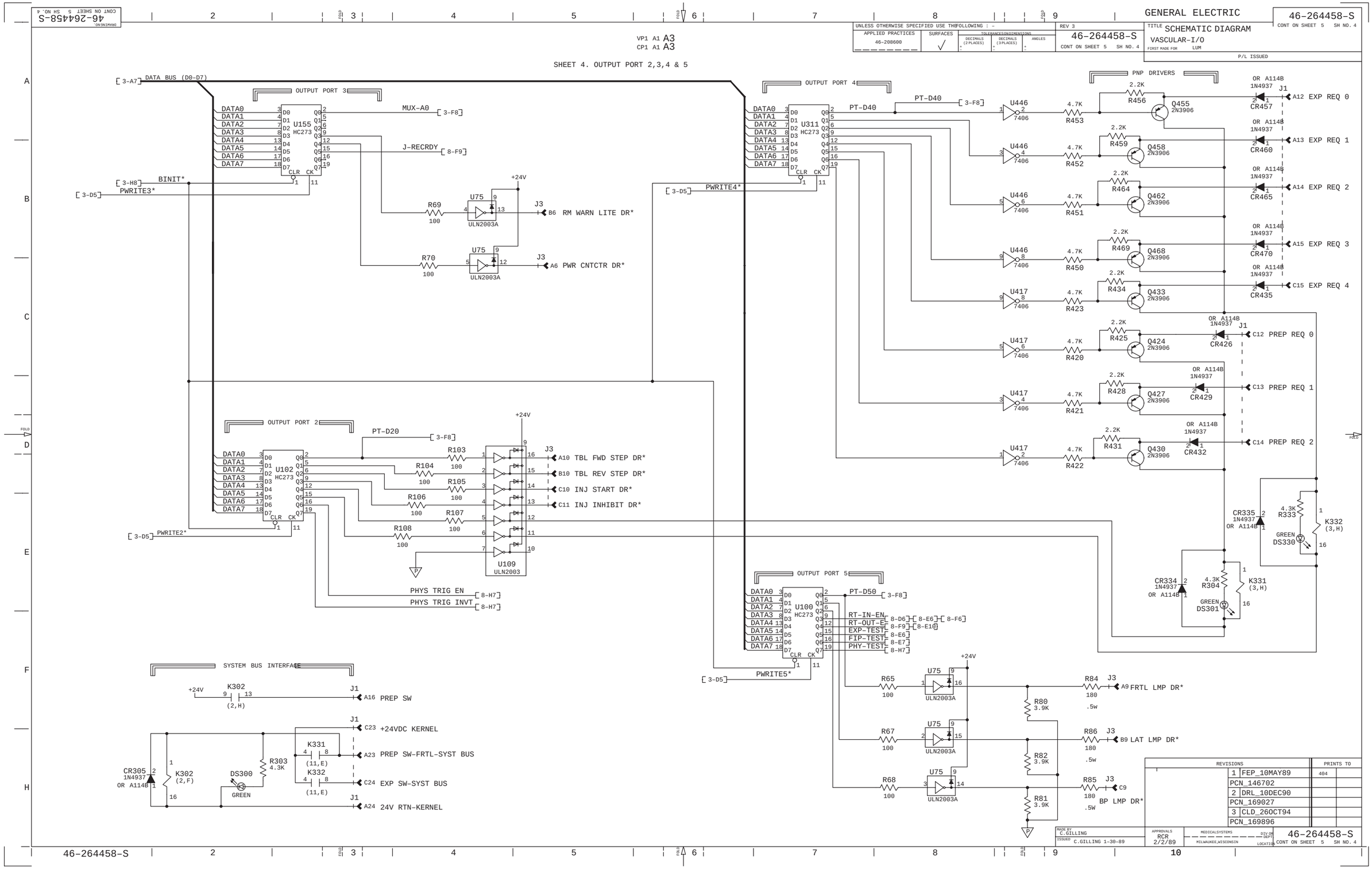

FRONTAL POSITIONER RACK

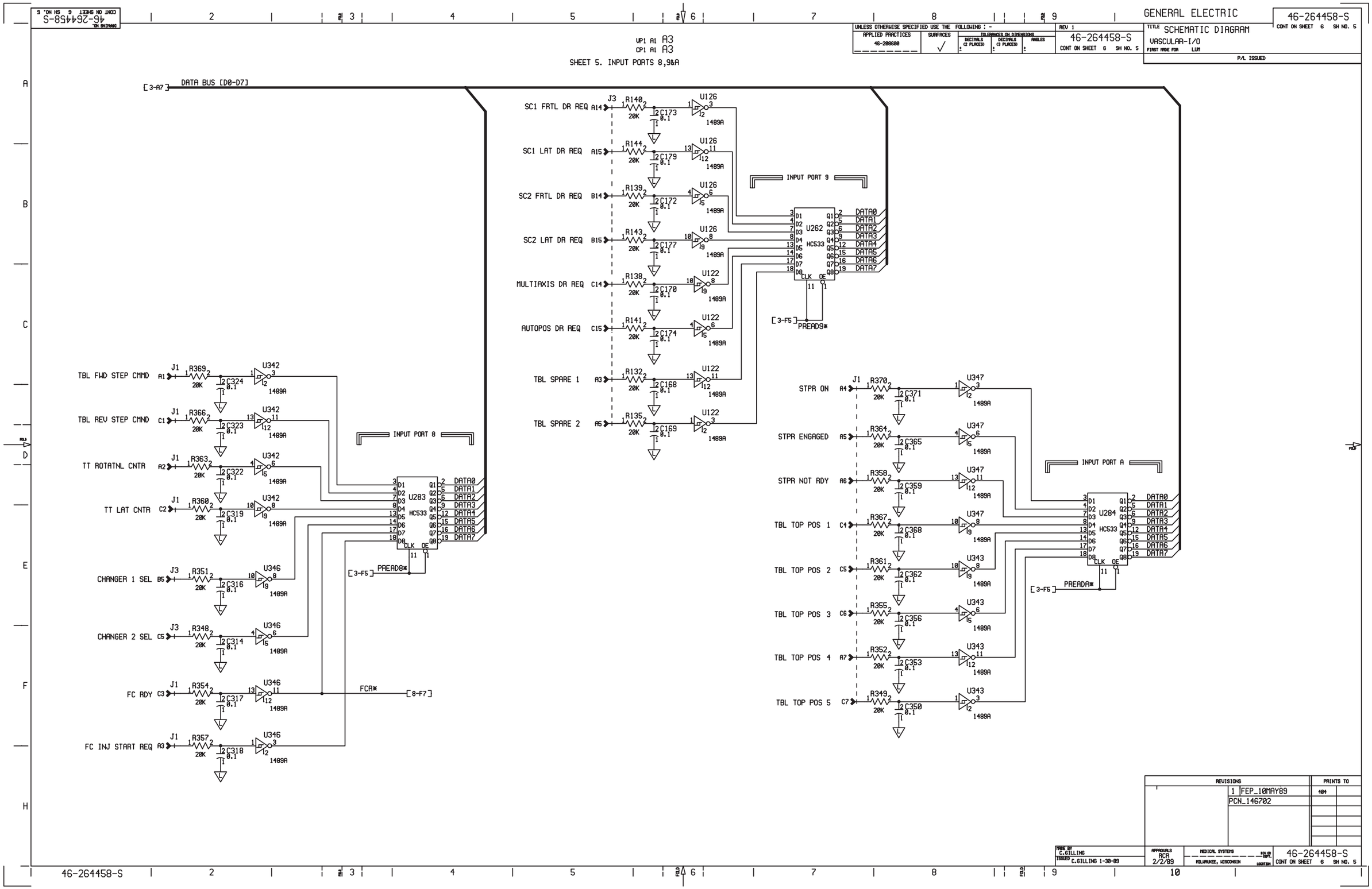
GENERAL ELECTRIC
46-264458-S
CONT ON SHEET 6 SH NO. 5
TITLE SCHEMATIC DIAGRAM
VASCULAR-I/O
FIRST MADE FOR LUM
P/L ISSUED
REV 1
UNLESS OTHERWISE SPECIFIED USE THE FOLLOWING : -
APPLIED PRACTICES 46-280680
SURFACES
TOLERANCES ON DIMENSIONS
VP1 A1 A3
CP1 A1 A3
SHEET 5. INPUT PORTS 8,9&A
DATA BUS [D0-D7]
INPUT PORT 9
INPUT PORT 8
INPUT PORT A
SC1 FRTL DR REQ
SC1 LAT DR REQ
SC2 FRTL DR REQ
SC2 LAT DR REQ
MULTIAXIS DR REQ
AUTOPOS DR REQ
TBL SPARE 1
TBL SPARE 2
TBL FWD STEP CMND
TBL REV STEP CMND
TT ROTATNL CNTR
TT LAT CNTR
CHANGER 1 SEL
CHANGER 2 SEL
FC RDY
FC INJ START REQ
STPR ON
STPR ENGAGED
STPR NOT RDY
TBL TOP POS 1
TBL TOP POS 2
TBL TOP POS 3
TBL TOP POS 4
TBL TOP POS 5
U262 HC533
U283 HC533
U284 HC533
PREAD9*
PREAD8*
PREADA*
FCR*
DATA0
DATA1
DATA2
DATA3
DATA4
DATA5
DATA6
DATA7
REVISIONS
1 FEP_10MAY89
PCN_146702
PRINTS TO
404
MADE BY C.GILLING
ISSUED C.GILLING 1-30-89
APPROVALS
RCR 2/2/89
MEDICAL SYSTEMS
MILWAUKEE, WISCONSIN
46-264458-S
CONT ON SHEET 6 SH NO. 5

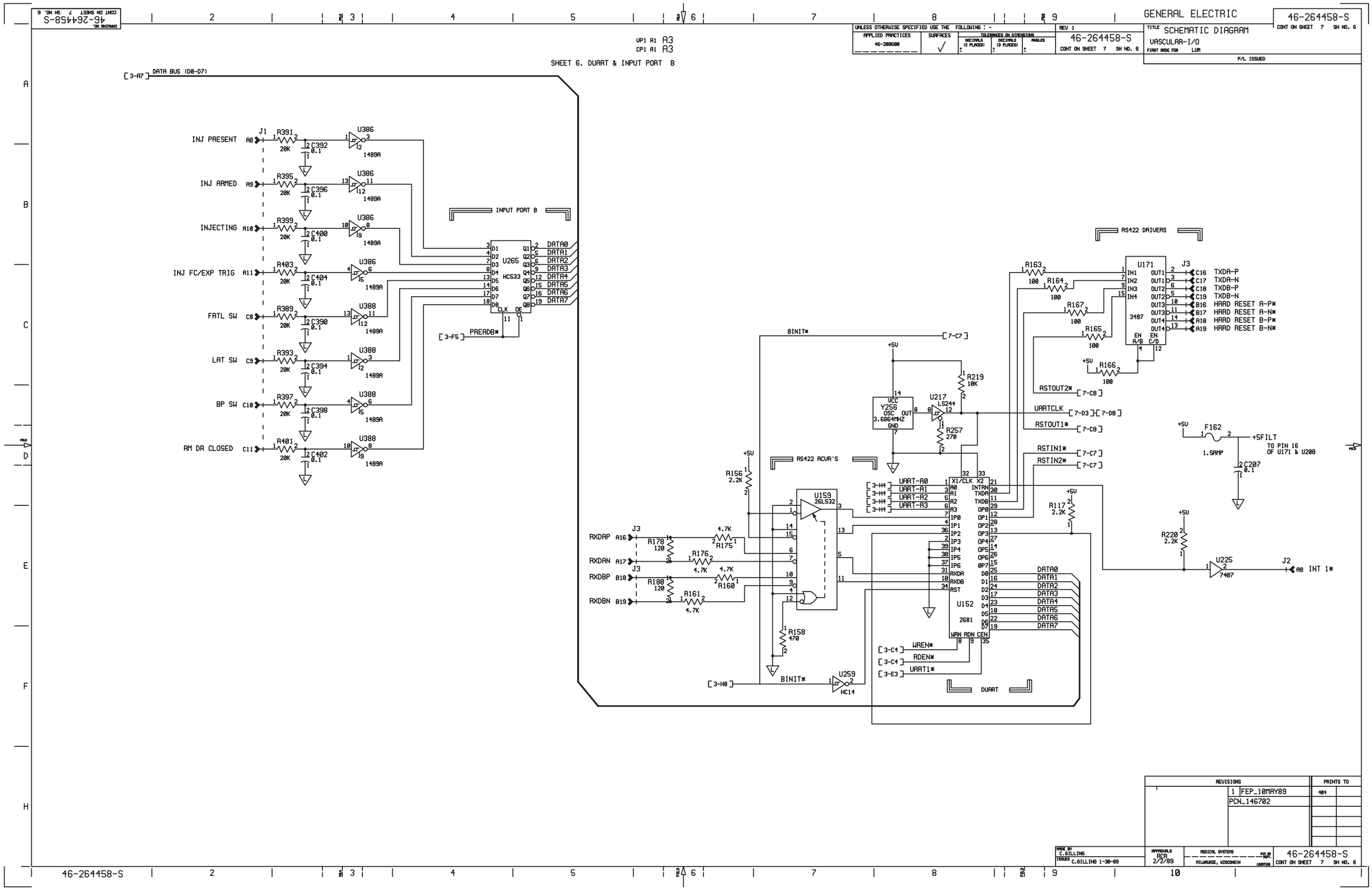

FRONTAL POSITIONER RACK

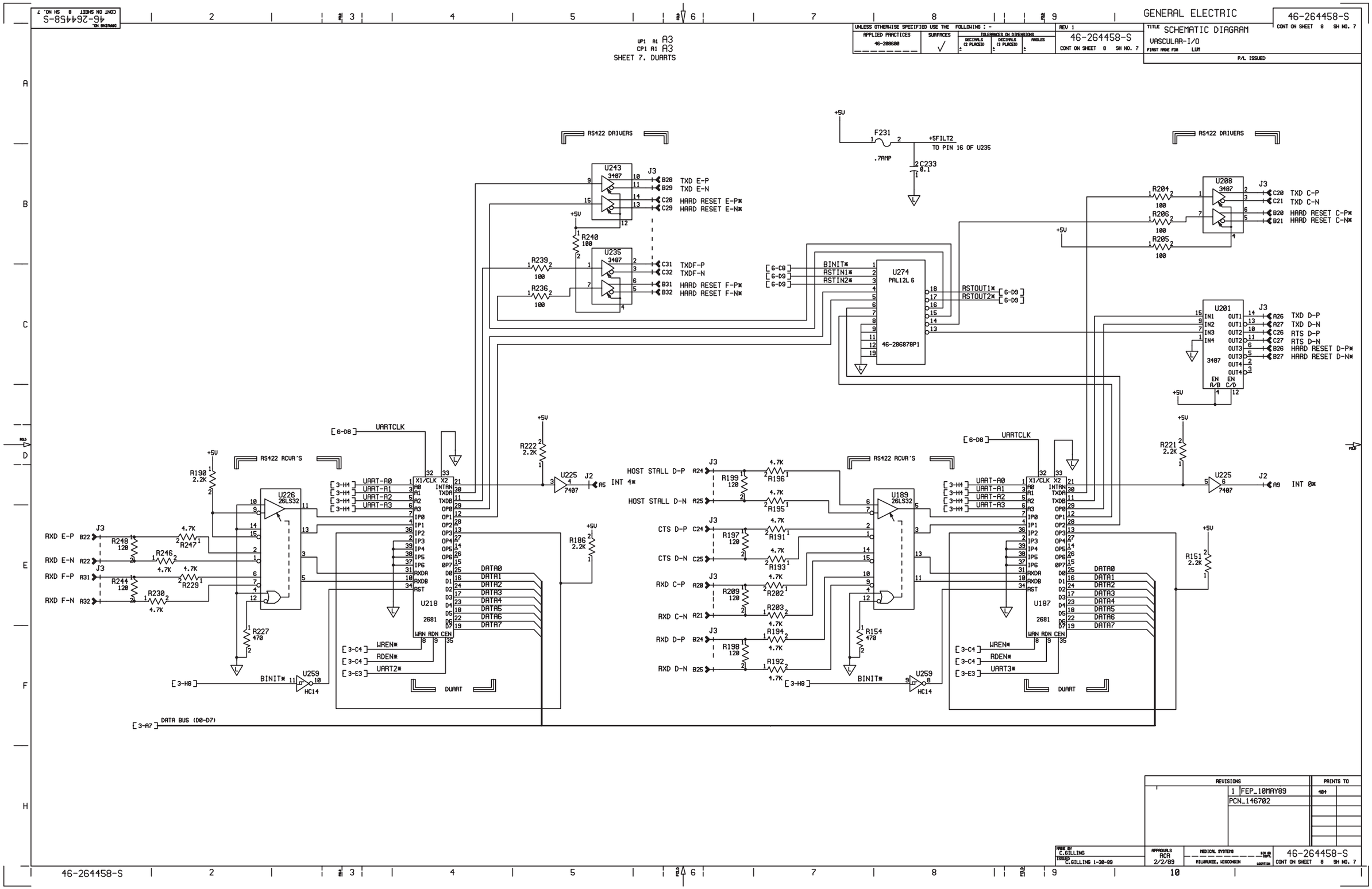
GENERAL ELECTRIC
46-264458-S
SCHEMATIC DIAGRAM
VASCULAR-I/O
RS422 DRIVERS
RS422 RCVR'S
DUART
U243
U235
U226
U218
U274
PAL12L6
46-286870P1
U208
U201
U189
U187
U225
U259
F231
+5FILT2
TO PIN 16 OF U235
.7AMP
C233
0.1
R240
R239
R236
R190
R227
R222
R186
R204
R206
R205
R221
R151
R199
R197
R209
R198
R196
R195
R191
R193
R202
R203
R194
R192
R154
TXD E-P
TXD E-N
HARD RESET E-P*
HARD RESET E-N*
TXDF-P
TXDF-N
HARD RESET F-P*
HARD RESET F-N*
TXD C-P
TXD C-N
HARD RESET C-P*
HARD RESET C-N*
TXD D-P
TXD D-N
RTS D-P
RTS D-N
HARD RESET D-P*
HARD RESET D-N*
RXD E-P
RXD E-N
RXD F-P
RXD F-N
HOST STALL D-P
HOST STALL D-N
CTS D-P
CTS D-N
RXD C-P
RXD C-N
RXD D-P
RXD D-N
UART-A0
UART-A1
UART-A2
UART-A3
UARTCLK
WREN*
RDEN*
UART2*
UART3*
BINIT*
RSTIN1*
RSTIN2*
RSTOUT1*
RSTOUT2*
DATA BUS (D0-D7)
DATA0
DATA1
DATA2
DATA3
DATA4
DATA5
DATA6
DATA7
INT 1*
INT 0*
REVISIONS
1 FEP_10MAY89
PCN_146702
PRINTS TO
401
DRAWN BY C.GILLING
ISSUED C.GILLING 1-30-89
APPROVALS MCR 2/2/89
MEDICAL SYSTEMS MILWAUKEE, WISCONSIN
46-264458-S
CONT ON SHEET 8 SH NO. 7

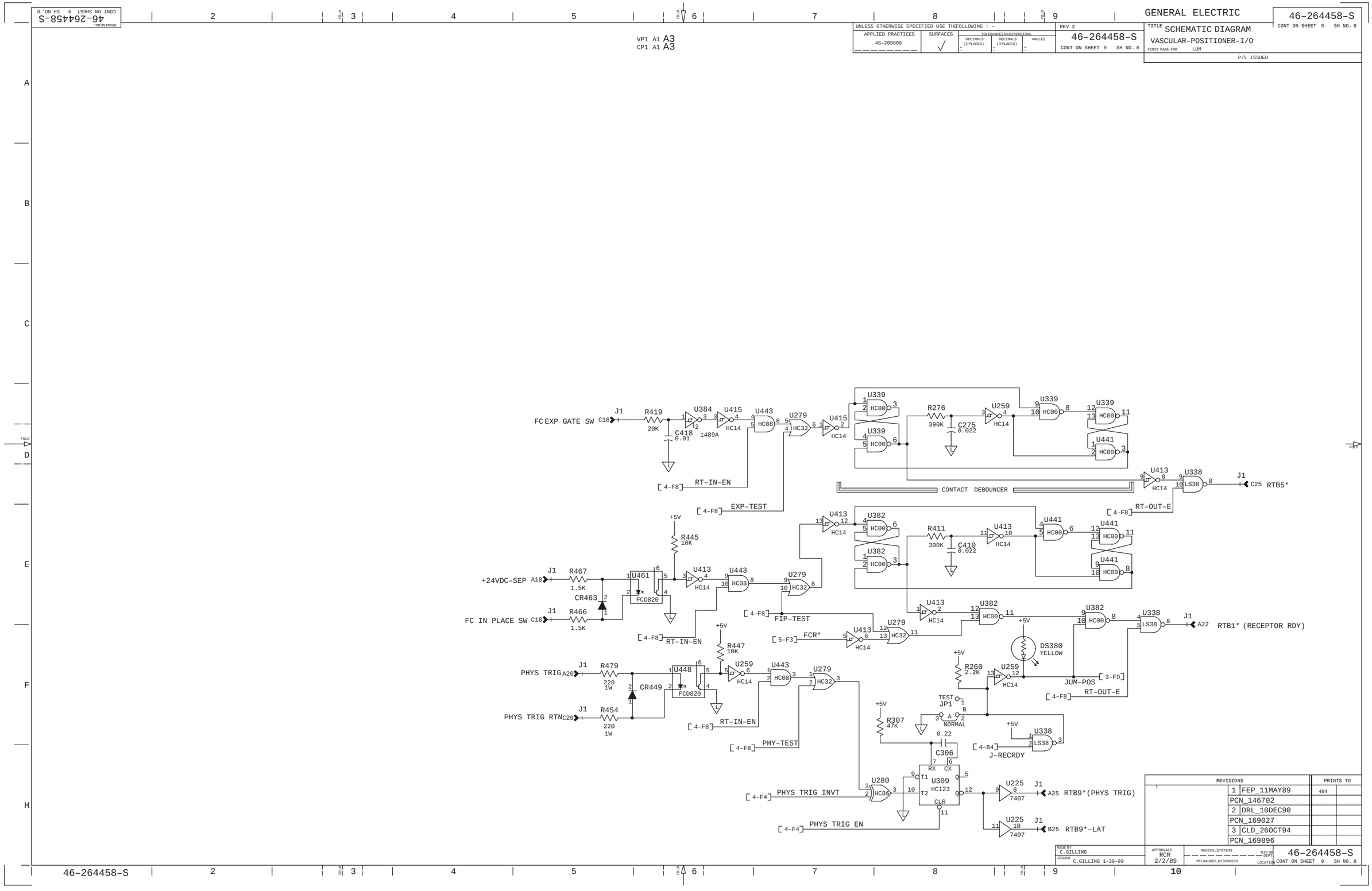
DRAWING NO. 46-264458-S
CONT ON SHEET 9 SH NO. 8
GENERAL ELECTRIC
46-264458-S
CONT ON SHEET 9 SH NO. 8
TITLE SCHEMATIC DIAGRAM
VASCULAR-POSITIONER-I/O
FIRST MADE FOR LUM
P/L ISSUED
UNLESS OTHERWISE SPECIFIED USE THE FOLLOWING : -
APPLIED PRACTICES 46-208600
SURFACES √
TOLERANCES ON DIMENSIONS
REV 3
VP1 A1 A3
CP1 A1 A3
FC EXP GATE SW C16
J1
R419 20K
C418 0.01
U384 1489A
U415 HC14
U443 HC08
U279 HC32
U339 HC00
R276 390K
C275 0.022
U259 HC14
U441 HC00
RT-IN-EN
EXP-TEST
CONTACT DEBOUNCER
U413 HC14
U338 LS38
C25 RTB5*
RT-OUT-E
R445 10K
+24VDC-SEP A18
R467 1.5K
U461 FCD820
CR463
FC IN PLACE SW C18
R466 1.5K
R411 390K
C410 0.022
U382 HC00
FIP-TEST
FCR*
A22 RTB1* (RECEPTOR RDY)
DS380 YELLOW
R447 10K
PHYS TRIG A20
R479 220 1W
U448 FCD820
CR449
PHYS TRIG RTN C20
R454 220 1W
JUM-POS
R260 2.2K
TEST JP1
NORMAL
R307 47K
0.22
C306
J-RECRDY
PHY-TEST
PHYS TRIG INVT
PHYS TRIG EN
U280 HC86
U309 HC123
U225 7407
A25 RTB9*(PHYS TRIG)
B25 RTB9*-LAT
REVISIONS
1 FEP_11MAY89
PCN_146702
2 DRL_10DEC90
PCN_169027
3 CLD_26OCT94
PCN_169896
PRINTS TO 404
MADE BY C.GILLING
ISSUED C.GILLING 1-30-89
APPROVALS RCR 2/2/89
MEDICALSYSTEMS DIV OR DEPT
MILWAUKEE,WISCONSIN LOCATION
46-264458-S
CONT ON SHEET 9 SH NO. 8

FRONTAL POSITIONER RACK

CONT ON SHEET 10 SH NO. 9 — DRAWING NO. 46-264458-S

VP1 A1 A3
CP1 A1 A3

UNLESS OTHERWISE SPECIFIED USE THFOLLOWING : –
APPLIED PRACTICES: 46-208600 | SURFACES: ✓ | TOLERANCES ON DIMENSIONS: DECIMALS (2 PLACES) ± | DECIMALS (3 PLACES) ± | ANGLES ±

REV 2 — 46–264458–S — CONT ON SHEET 10 SH NO. 9

GENERAL ELECTRIC — 46–264458–S — CONT ON SHEET 10 SH NO. 9

TITLE SCHEMATIC DIAGRAM
VASCULAR–I/O
FIRST MADE FOR LUM
P/L ISSUED

J1
+24VDC: A27, B27, C27
24V RTN: A28, B28, C28
C372 22 (+)
C373 0.1
+24V

J2
+5VDC: A2, B2, C2, A31, B31, C31
5V RTN: A1, B1, C1, A32, B32, C32
C181 22 (+)
C385 0.1 — 20 — C241,C242,C266,C292, C315,C312,C285,C263, C234,C228,C261,C281, C282,C310,C340,C344, C345,C387,C341,
C416 0.1 — 21 — C444,C442,C414,C383, C440,C412,C381,C337, C336,C308,C278,C277, C258,C223,C200, C224,C188,C255, C216,C215,
C185 0.1 — 15 — C150,C153,C157, C121, C120,C99,C52, C124,C125,C101, C61,C273,
+5V

U443 HC08
U338 LS38
U309 HC123 (RX, CX, T1, T2, CLR)
U446 7406
U446 7406
U417 7406
U417 7406
U415 HC14
U415 HC14
U415 HC14
U415 HC14
U225 7407
U280 HC86
U280 HC86
U280 HC86
U217 LS244
U217 LS244
U217 LS244
U217 LS244
U217 LS244
U217 LS244
U217 LS244
U217 LS244
U384 1489A
U384 1489A
U384 1489A

+24V
U75 ULN2003A
U75 ULN2003A

U243 3487
U235 3487
U208 3487

DEVICE OUTLINES (TOP VIEW)

U171 U208 3487 — +5FILT
2N3906 (C)
LM317T (A, O, I)
3487 — +5V
3487 — +5FILT2
8307 16R4 12L6 HC244 HC240 HC273 HC533 LS244 LS240 — +5V
HCT138 HC123 26LS32 — +5V
7406 HC14 7407 MC1489A HC86 HC00 LS38 HC08 — +5V
ULN2003 — +24V
ULN2803 — +24V
2681 — +5V
HCT154 — +5V

REVISIONS		PRINTS TO
1	FEP_11MAY89	404
	PCN_146702	
2	CLD_26OCT94	
	PCN_169896	

MADE BY C.GILLING
ISSUED C.GILLING 1-30-89
APPROVALS RCR 2/2/89
MEDICALSYSTEMS MILWAUKEE,WISCONSIN
DEV ON DEPT LOCATION
46–264458–S CONT ON SHEET 10 SH NO. 9

46–264458–S

VP1 A1 A3
CP1 A1 A3
SHEET 9. MULTIBUS INTERFACE PAL
PAL16R4

SIMPLIFIED STATE DIAGRAM

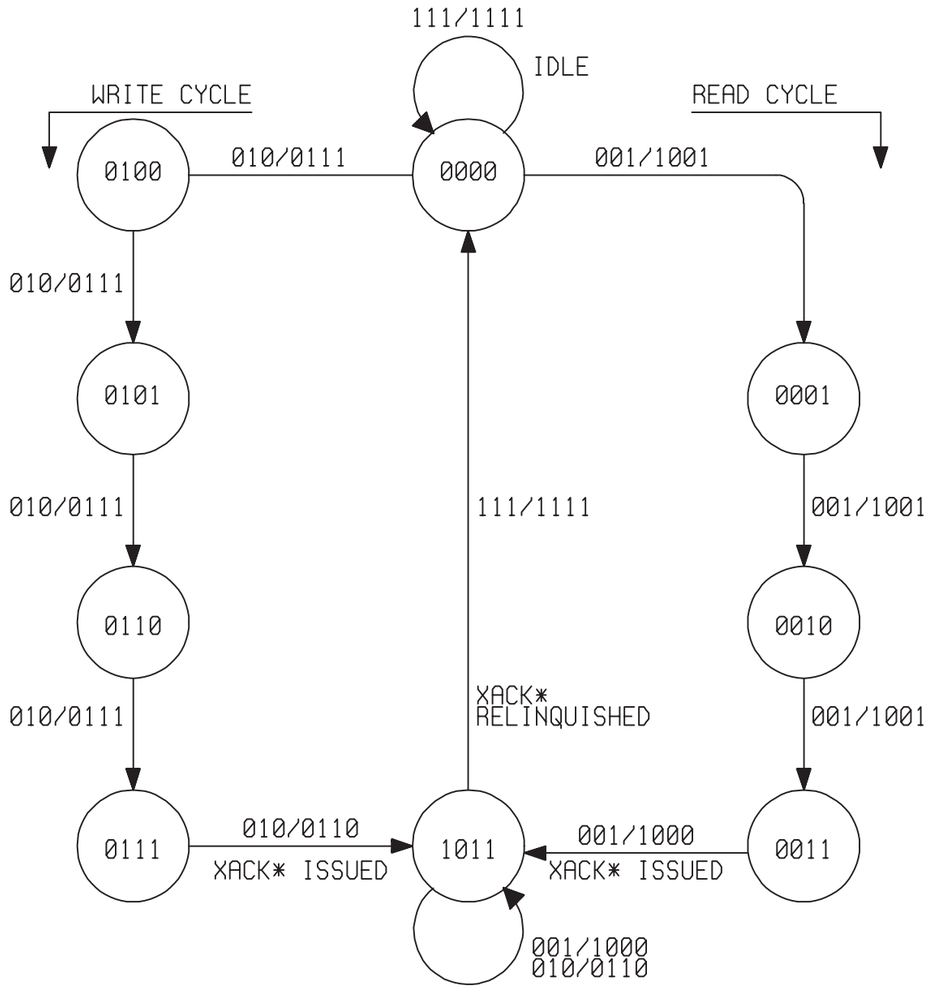

KEY:

EACH STATE XXXX = XEN, WREN, S1, S0

INPUTS YYY = BDEN*, IORC*, IOWC*

OUTPUTS ZZZZ = REC*, TRAN*, RDEN*, XACK*

READ CYCLE TIMING

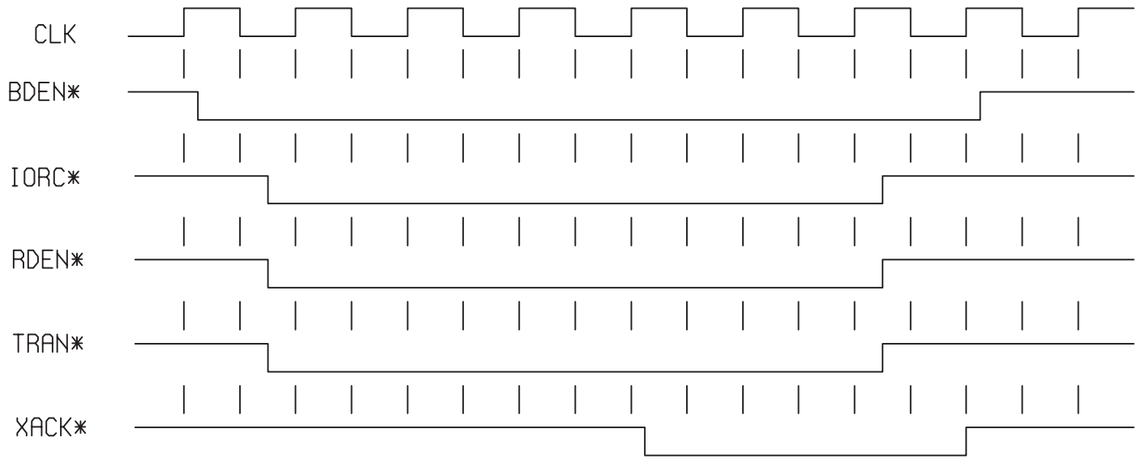

WRITE CYCLE TIMING

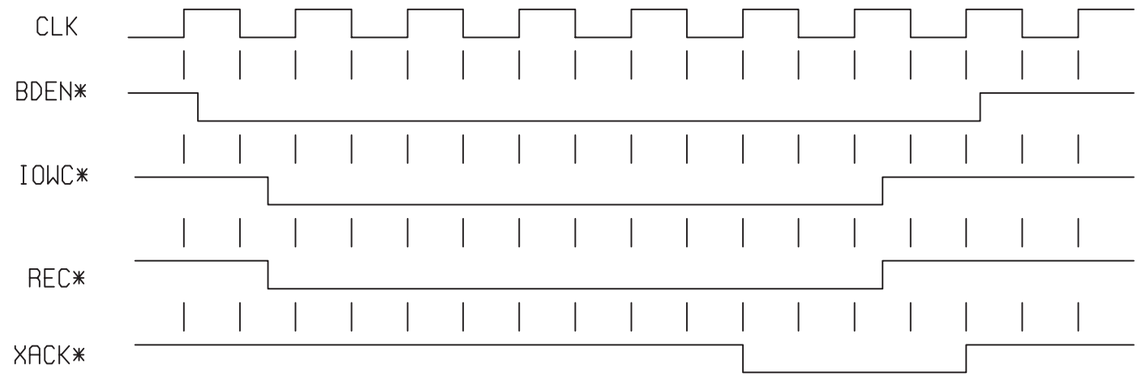

GENERAL ELECTRIC
46-264458-S
CONT ON SHEET 11 SH NO. 10
TITLE SCHEMATIC DIAGRAM VASCULAR-I/O
FIRST MADE FOR LUM
P/L ISSUED
UNLESS OTHERWISE SPECIFIED USE THE FOLLOWING : -
APPLIED PRACTICES 46-280680
SURFACES ✓
TOLERANCES ON DIMENSIONS: DECIMALS (2 PLACES) ±, DECIMALS (3 PLACES) ±, ANGLES ±
REV 1
46-264458-S
CONT ON SHEET 11 SH NO. 10
DRAWING NO. 46-264458-S CONT ON SHEET 11 SH NO. 10

REVISIONS
1 FEP_146702
PCN_146702
PRINTS TO 404

DRAWN BY C.GILLING
ISSUED C.GILLING 1-30-89
APPROVALS RCR 2/2/89
MEDICAL SYSTEMS MILWAUKEE, WISCONSIN
46-264458-S
CONT ON SHEET 11 SH NO. 10

FRONTAL POSITIONER RACK

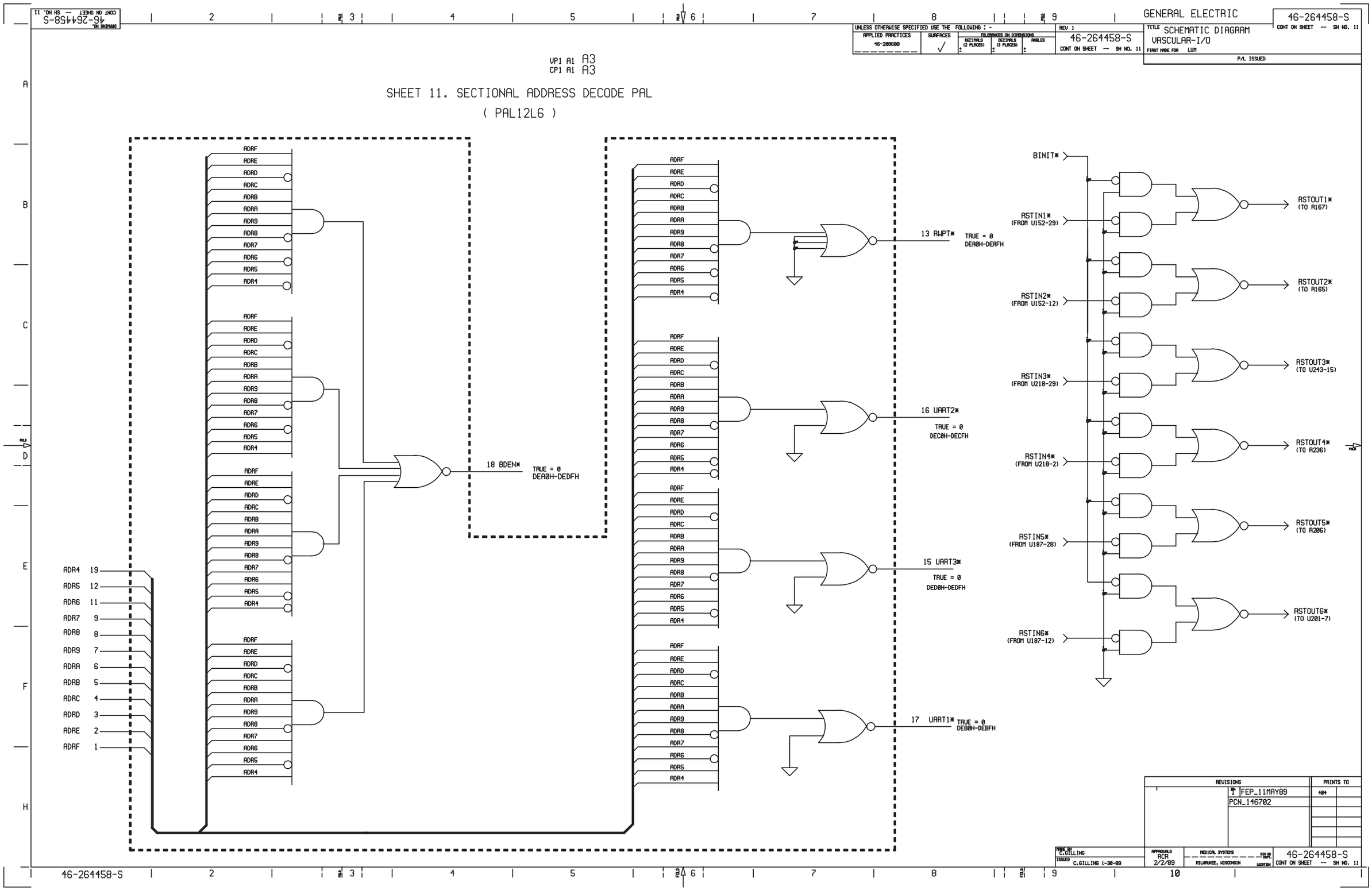
DRAWING NO. 46-264458-S CONT ON SHEET -- SH NO. 11
GENERAL ELECTRIC
46-264458-S
CONT ON SHEET -- SH NO. 11
UNLESS OTHERWISE SPECIFIED USE THE FOLLOWING : -
APPLIED PRACTICES 46-208680
SURFACES
TOLERANCES ON DIMENSIONS
DECIMALS (2 PLACES) ±
DECIMALS (3 PLACES) ±
ANGLES ±
REV 1
46-264458-S
CONT ON SHEET -- SH NO. 11
TITLE SCHEMATIC DIAGRAM
VASCULAR-I/O
FIRST MADE FOR LUM
P/L ISSUED
UP1 A1 A3
CP1 A1 A3
SHEET 11. SECTIONAL ADDRESS DECODE PAL
(PAL12L6)
ADRF
ADRE
ADRD
ADRC
ADRB
ADRA
ADR9
ADR8
ADR7
ADR6
ADR5
ADR4
18 BDEN*
TRUE = 0
DEA0H-DEDFH
13 AWPT*
TRUE = 0
DEA0H-DEAFH
16 UART2*
TRUE = 0
DEC0H-DECFH
15 UART3*
TRUE = 0
DED0H-DEDFH
17 UART1*
TRUE = 0
DEB0H-DEBFH
ADR4 19
ADR5 12
ADR6 11
ADR7 9
ADR8 8
ADR9 7
ADRA 6
ADRB 5
ADRC 4
ADRD 3
ADRE 2
ADRF 1
BINIT*
RSTIN1* (FROM U152-29)
RSTOUT1* (TO R167)
RSTIN2* (FROM U152-12)
RSTOUT2* (TO R165)
RSTIN3* (FROM U218-29)
RSTOUT3* (TO U243-15)
RSTIN4* (FROM U218-2)
RSTOUT4* (TO R236)
RSTIN5* (FROM U187-28)
RSTOUT5* (TO R205)
RSTIN6* (FROM U187-12)
RSTOUT6* (TO U201-7)
REVISIONS
PRINTS TO
1 FEP_11MAY89
PCN_146702
404
DRAWN BY C.GILLING
ISSUED C.GILLING 1-30-89
APPROVALS RCR 2/2/89
MEDICAL SYSTEMS MILWAUKEE, WISCONSIN
46-264458-S
CONT ON SHEET -- SH NO. 11

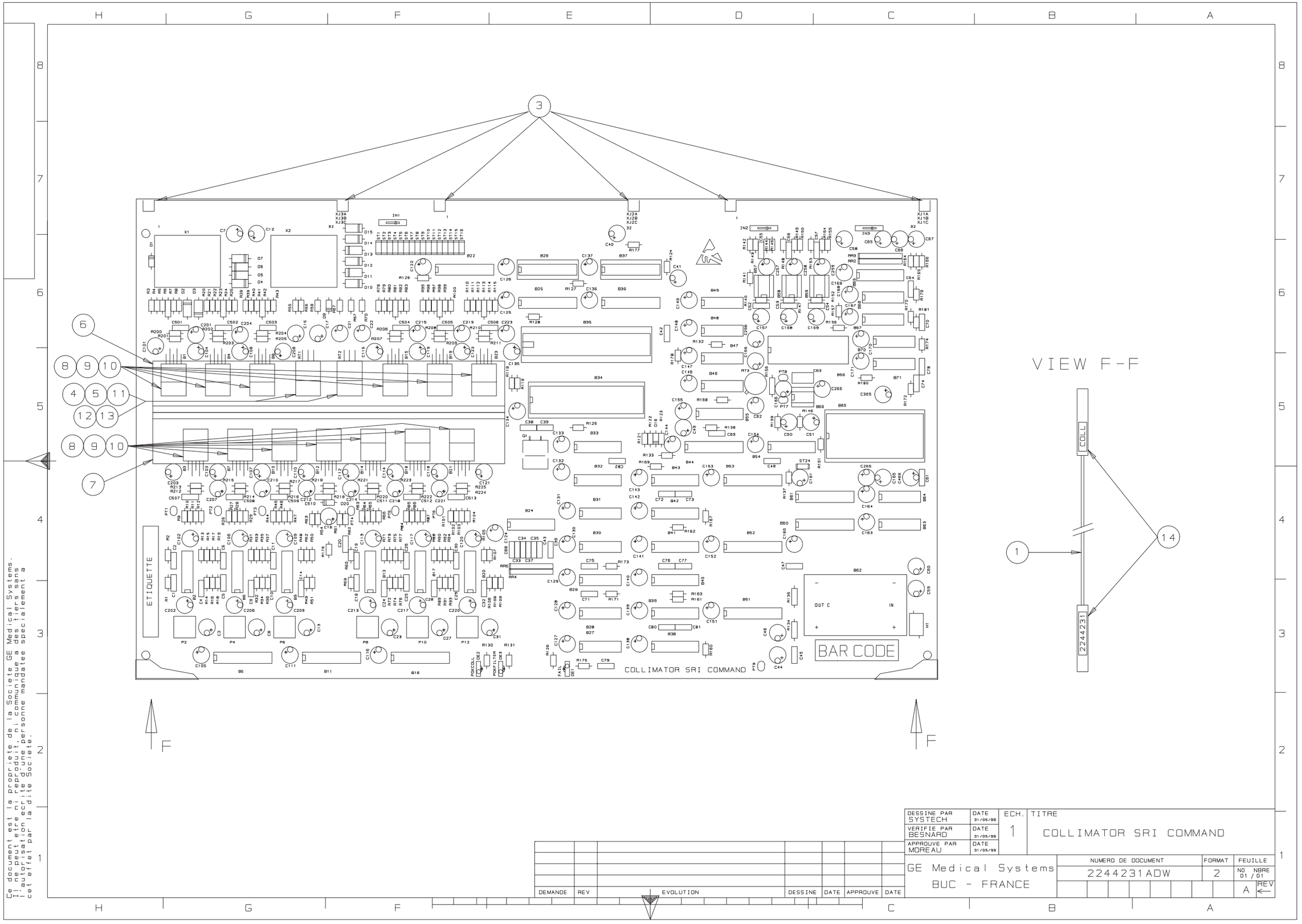

Ce document est la propriete de la Societe GE Medical Systems.
Il ne peut etre ni reproduit, ni communique a des tiers sans
l'autorisation ecrite d'une personne mandatee specialement a
cet effet par la dite Societe.

DESSINE PAR SYSTECH	DATE 31/05/99	ECH. 1	TITRE COLLIMATOR SRI COMMAND						
VERIFIE PAR BESNARD	DATE 31/05/99								
APPROUVE PAR MOREAU	DATE 31/05/99								
GE Medical Systems BUC - FRANCE			NUMERO DE DOCUMENT 2244231ADW					FORMAT 2	FEUILLE NO 01 / 01 NBRE
									REV A

DEMANDE	REV	EVOLUTION	DESSINE	DATE	APPROUVE	DATE

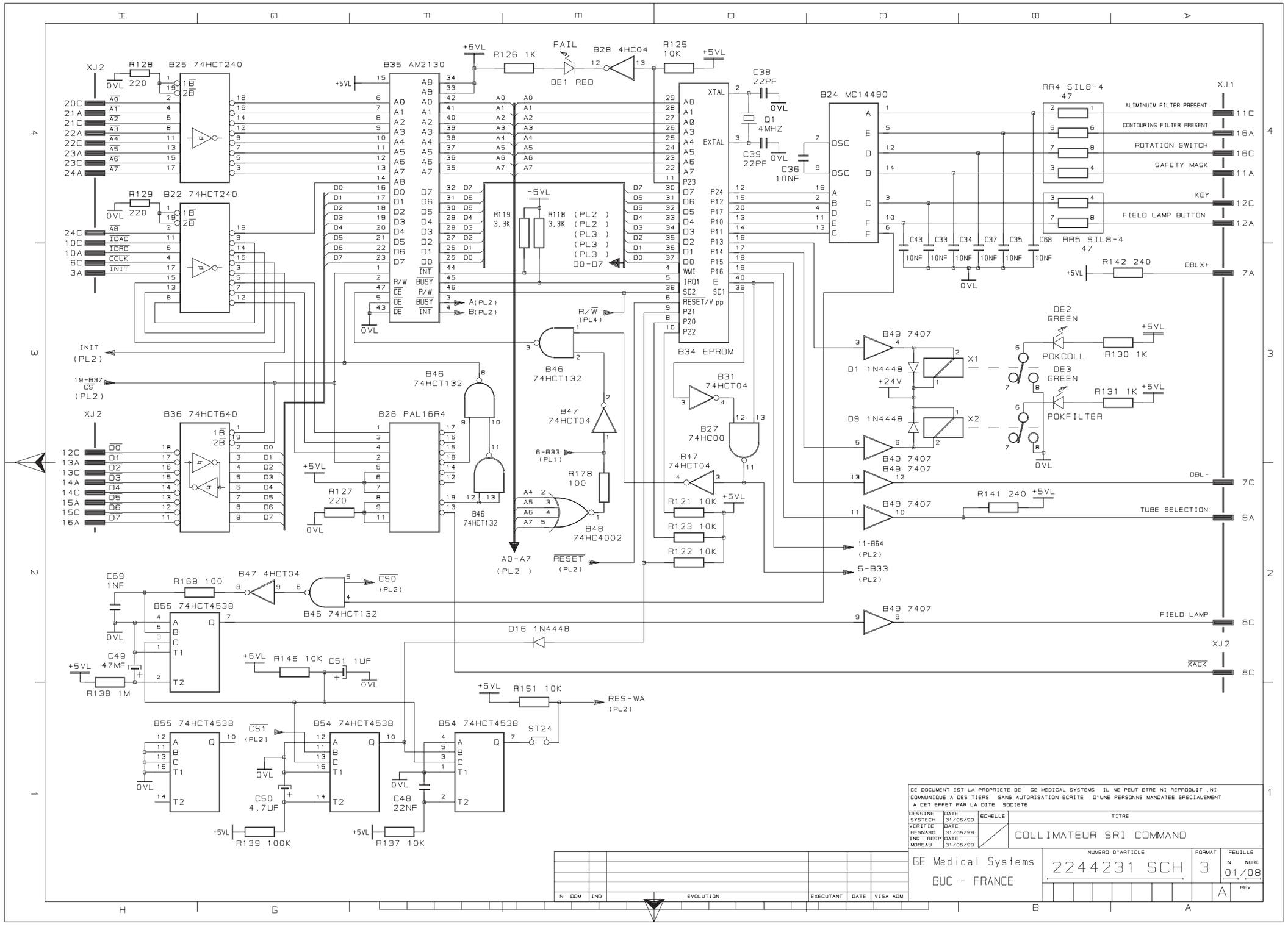
XJ2
R128 220
B25 74HCT240
R129 220
B22 74HCT240
B35 AM2130
+5VL
R126 1K
FAIL
DE1 RED
B28 4HC04
R125 10K
C38 22PF
Q1 4MHZ
C39 22PF
C36 10NF
B24 MC14490
RR4 SIL8-4 47
RR5 SIL8-4 47
C43 C33 C34 C37 C35 C68 10NF
XJ1
ALIMINUIM FILTER PRESENT 11C
CONTOURING FILTER PRESENT 16A
ROTATION SWITCH 16C
SAFETY MASK 11A
KEY 12C
FIELD LAMP BUTTON 12A
R142 240
DBLX+ 7A
R119 3,3K
R118 3,3K
D0-D7
A(PL2)
B(PL2)
B34 EPROM
R/W (PL4)
B46 74HCT132
B31 74HCT04
B27 74HCT00
B47 74HCT04
R178 100
R121 10K
R123 10K
R122 10K
INIT (PL2)
19-B37 CS (PL2)
B36 74HCT640
B26 PAL16R4
R127 220
B48 74HC4002
A0-A7 (PL2)
RESET (PL2)
6-B33 (PL1)
11-B64 (PL2)
5-B33 (PL2)
B49 7407
D1 1N4448
D9 1N4448
+24V
X1
X2
DE2 GREEN
POKCOLL
R130 1K
DE3 GREEN
POKFILTER
R131 1K
DBL- 7C
R141 240
TUBE SELECTION 6A
FIELD LAMP 6C
XJ2
XACK 8C
C69 1NF
R168 100
B47 4HCT04
CS0 (PL2)
B55 74HCT4538
D16 1N4448
C49 47MF
R138 1M
R146 10K
C51 1UF
R151 10K
RES-WA (PL2)
B54 74HCT4538
ST24
CS1 (PL2)
C50 4,7UF
C48 22NF
R139 100K
R137 10K
CE DOCUMENT EST LA PROPRIETE DE GE MEDICAL SYSTEMS IL NE PEUT ETRE NI REPRODUIT , NI COMMUNIQUE A DES TIERS SANS AUTORISATION ECRITE D'UNE PERSONNE MANDATEE SPECIALEMENT A CET EFFET PAR LA DITE SOCIETE
DESSINE SYSTECH 31/05/99
VERIFIE BESNARD 31/05/99
ING RESP MOREAU 31/05/99
ECHELLE
TITRE
COLLIMATEUR SRI COMMAND
GE Medical Systems
BUC - FRANCE
NUMERO D'ARTICLE 2244231 SCH
FORMAT 3
FEUILLE N NBRE 01/08
REV A
N DDM IND EVOLUTION EXECUTANT DATE VISA ADM

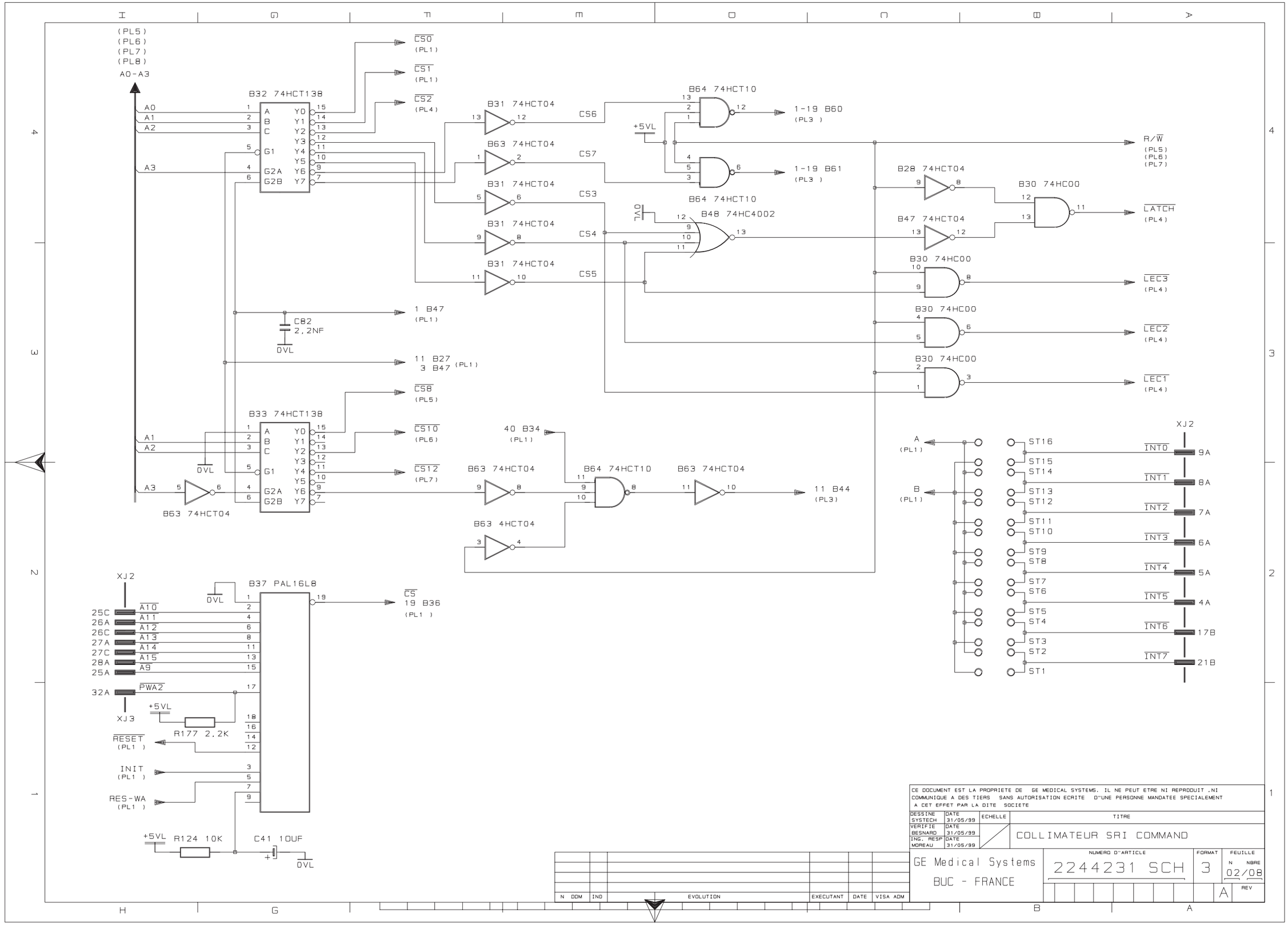
(PL5)
(PL6)
(PL7)
(PL8)
A0-A3
B32 74HCT138
A0
A1
A2
A3
G1
G2A
G2B
Y0
Y1
Y2
Y3
Y4
Y5
Y6
Y7
CS0 (PL1)
CS1 (PL1)
CS2 (PL4)
B31 74HCT04
CS6
CS7
CS3
CS4
CS5
B64 74HCT10
+5VL
1-19 B60 (PL3)
1-19 B61 (PL3)
B64 74HCT10
B48 74HC4002
OVL
R/W (PL5) (PL6) (PL7)
B28 74HCT04
B47 74HCT04
B30 74HC00
LATCH (PL4)
LEC3 (PL4)
LEC2 (PL4)
LEC1 (PL4)
1 B47 (PL1)
C82 2,2NF
11 B27 (PL1)
3 B47 (PL1)
CS8 (PL5)
B33 74HCT138
CS10 (PL6)
CS12 (PL7)
40 B34 (PL1)
B63 74HCT04
B64 74HCT10
11 B44 (PL3)
B63 4HCT04
XJ2
A (PL1)
B (PL1)
ST16
ST15
ST14
ST13
ST12
ST11
ST10
ST9
ST8
ST7
ST6
ST5
ST4
ST3
ST2
ST1
INT0 9A
INT1 8A
INT2 7A
INT3 6A
INT4 5A
INT5 4A
INT6 17B
INT7 21B
B37 PAL16L8
CS 19 B36 (PL1)
A10
A11
A12
A13
A14
A15
A9
PWA2
25C
26A
26C
27A
27C
28A
25A
32A
XJ3
RESET (PL1)
INIT (PL1)
RES-WA (PL1)
R177 2,2K
R124 10K
C41 10UF
CE DOCUMENT EST LA PROPRIETE DE GE MEDICAL SYSTEMS. IL NE PEUT ETRE NI REPRODUIT .NI COMMUNIQUE A DES TIERS SANS AUTORISATION ECRITE D"UNE PERSONNE MANDATEE SPECIALEMENT A CET EFFET PAR LA DITE SOCIETE
DESSINE SYSTECH DATE 31/05/99
VERIFIE BESNARD DATE 31/05/99
ING. RESP MOREAU DATE 31/05/99
ECHELLE
TITRE
COLLIMATEUR SRI COMMAND
GE Medical Systems
BUC - FRANCE
NUMERO D"ARTICLE 2244231 SCH
FORMAT 3
FEUILLE N NBRE 02/08
REV A
N DDM IND EVOLUTION EXECUTANT DATE VISA ADM

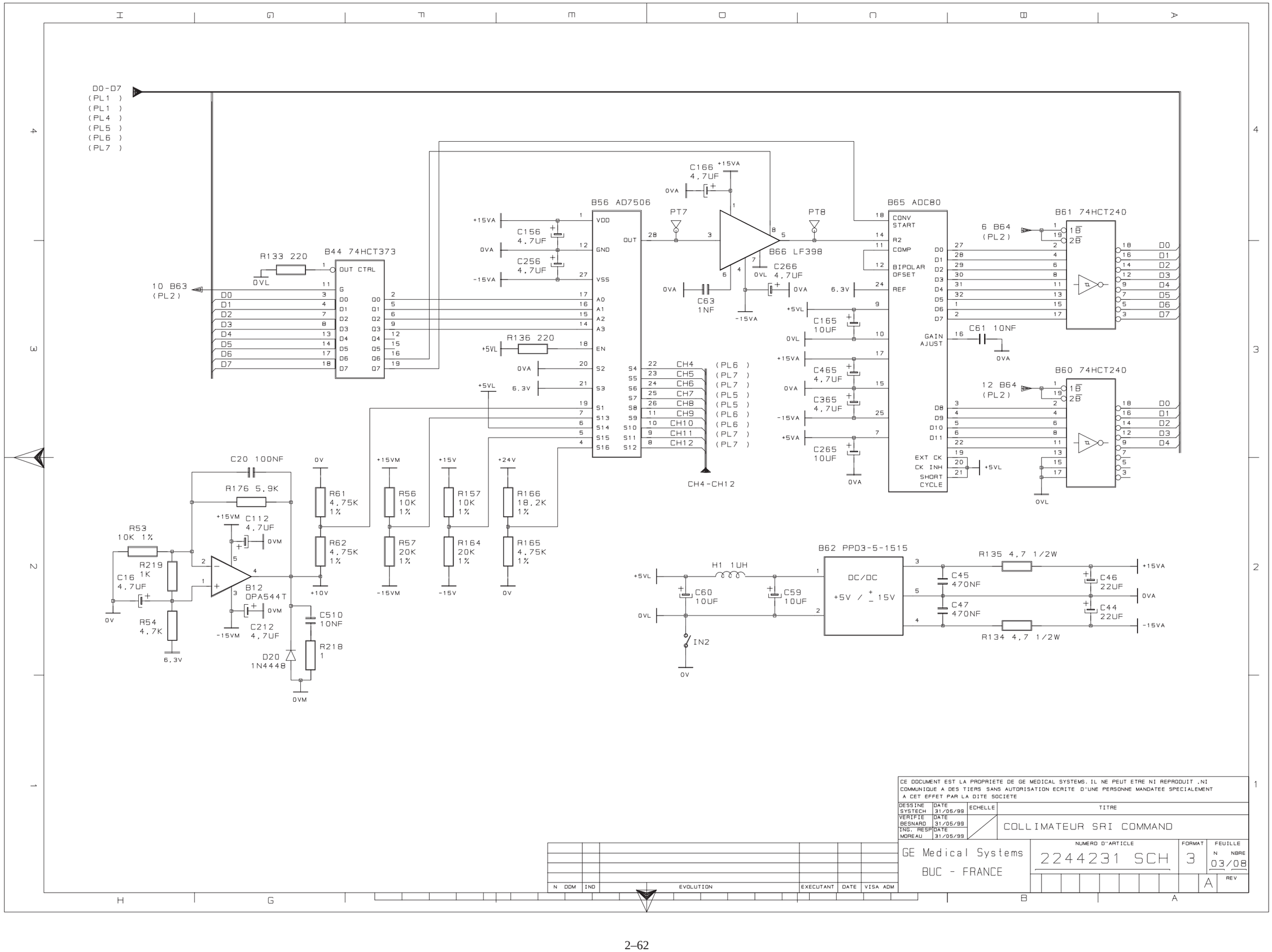

CE DOCUMENT EST LA PROPRIETE DE GE MEDICAL SYSTEMS. IL NE PEUT ETRE NI REPRODUIT ,NI COMMUNIQUE A DES TIERS SANS AUTORISATION ECRITE D''UNE PERSONNE MANDATEE SPECIALEMENT A CET EFFET PAR LA DITE SOCIETE

DESSINE SYSTECH	DATE 31/05/99	ECHELLE	TITRE: COLLIMATEUR SRI COMMAND
VERIFIE BESNARD	DATE 31/05/99		
ING. RESP MOREAU	DATE 31/05/99		

N	DDM	IND	EVOLUTION	EXECUTANT	DATE	VISA ADM

GE Medical Systems
BUC - FRANCE

NUMERO D''ARTICLE: 2244231 SCH | FORMAT: 3 | FEUILLE N NBRE: 03/08 | REV: A

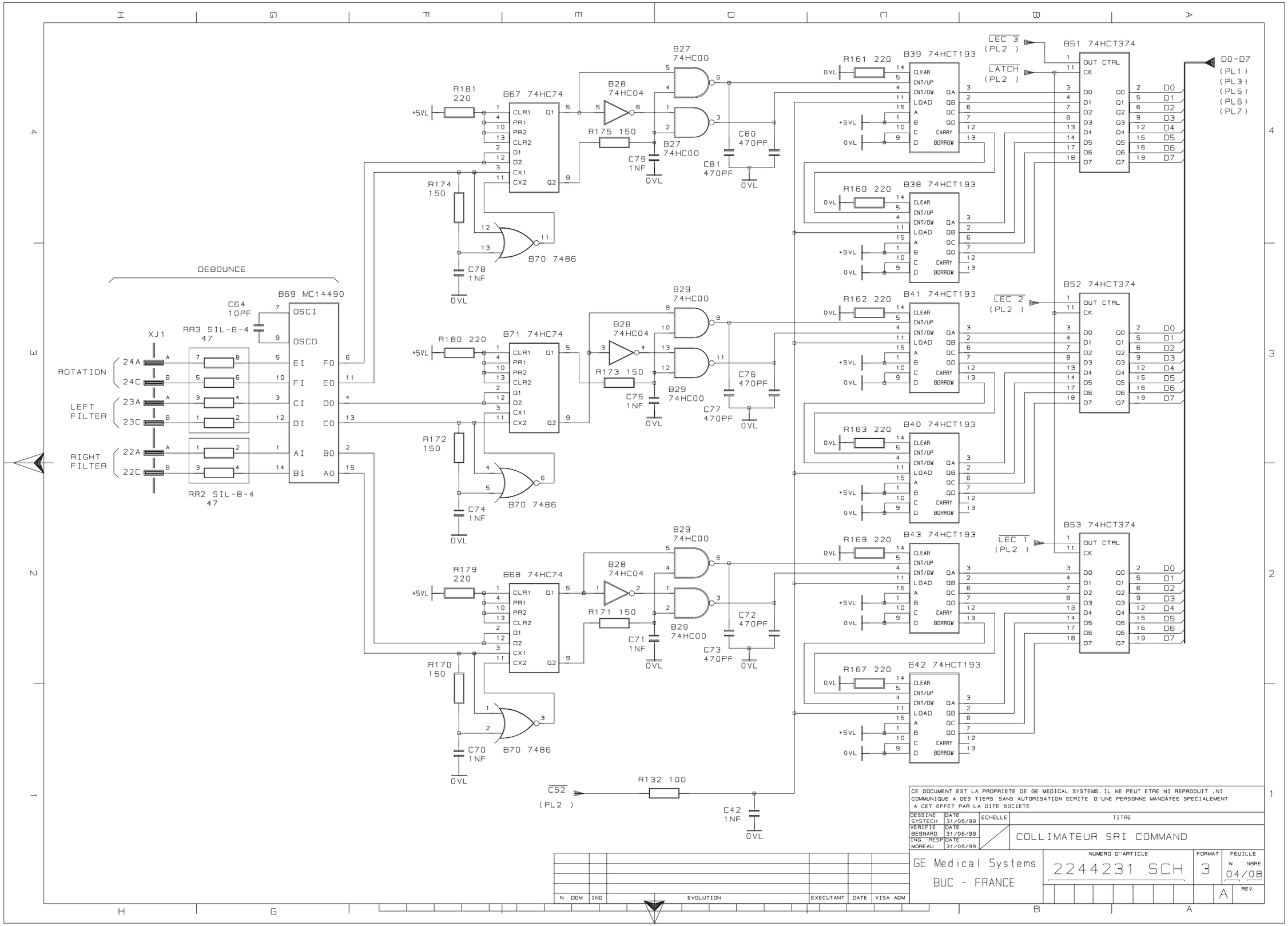
DEBOUNCE
B69 MC14490
OSCI
OSCO
EI
FI
CI
DI
AI
BI
FO
EO
DO
CO
BO
AO
C64
10PF
XJ1
RR3 SIL-8-4
47
RR2 SIL-8-4
47
ROTATION
24A
24C
LEFT
FILTER
23A
23C
RIGHT
FILTER
22A
22C
B67 74HC74
B71 74HC74
B68 74HC74
CLR1
PR1
PR2
CLR2
D1
D2
CX1
CX2
Q1
Q2
R181
220
R180 220
R179
220
+5VL
R174
150
R172
150
R170
150
C78
1NF
C74
1NF
C70
1NF
B70 7486
B28
74HC04
B27
74HC00
B29
74HC00
R175 150
R173 150
R171 150
C79
1NF
C75
1NF
C71
1NF
C80
470PF
C81
470PF
C76
470PF
C77
470PF
C72
470PF
C73
470PF
OVL
B39 74HCT193
B38 74HCT193
B41 74HCT193
B40 74HCT193
B43 74HCT193
B42 74HCT193
R161 220
R160 220
R162 220
R163 220
R169 220
R167 220
CLEAR
CNT/UP
CNT/DW
LOAD
A
B
C
D
QA
QB
QC
QD
CARRY
BORROW
B51 74HCT374
B52 74HCT374
B53 74HCT374
OUT CTRL
CK
D0
D1
D2
D3
D4
D5
D6
D7
Q0
Q1
Q2
Q3
Q4
Q5
Q6
Q7
LEC 3
(PL2)
LATCH
(PL2)
LEC 2
(PL2)
LEC 1
(PL2)
D0-D7
(PL1)
(PL3)
(PL5)
(PL6)
(PL7)
C52
(PL2)
R132 100
C42
1NF
CE DOCUMENT EST LA PROPRIETE DE GE MEDICAL SYSTEMS. IL NE PEUT ETRE NI REPRODUIT .NI
COMMUNIQUE A DES TIERS SANS AUTORISATION ECRITE D'UNE PERSONNE MANDATEE SPECIALEMENT
A CET EFFET PAR LA DITE SOCIETE
DESSINE SYSTECH
DATE 31/05/99
ECHELLE
TITRE
VERIFIE BESNARD
DATE 31/05/99
ING. RESP MOREAU
DATE 31/05/99
COLLIMATEUR SRI COMMAND
GE Medical Systems
BUC - FRANCE
NUMERO D'ARTICLE
2244231 SCH
FORMAT
3
FEUILLE
N NBRE
04/08
REV
A
N DDM
IND
EVOLUTION
EXECUTANT
DATE
VISA ADM

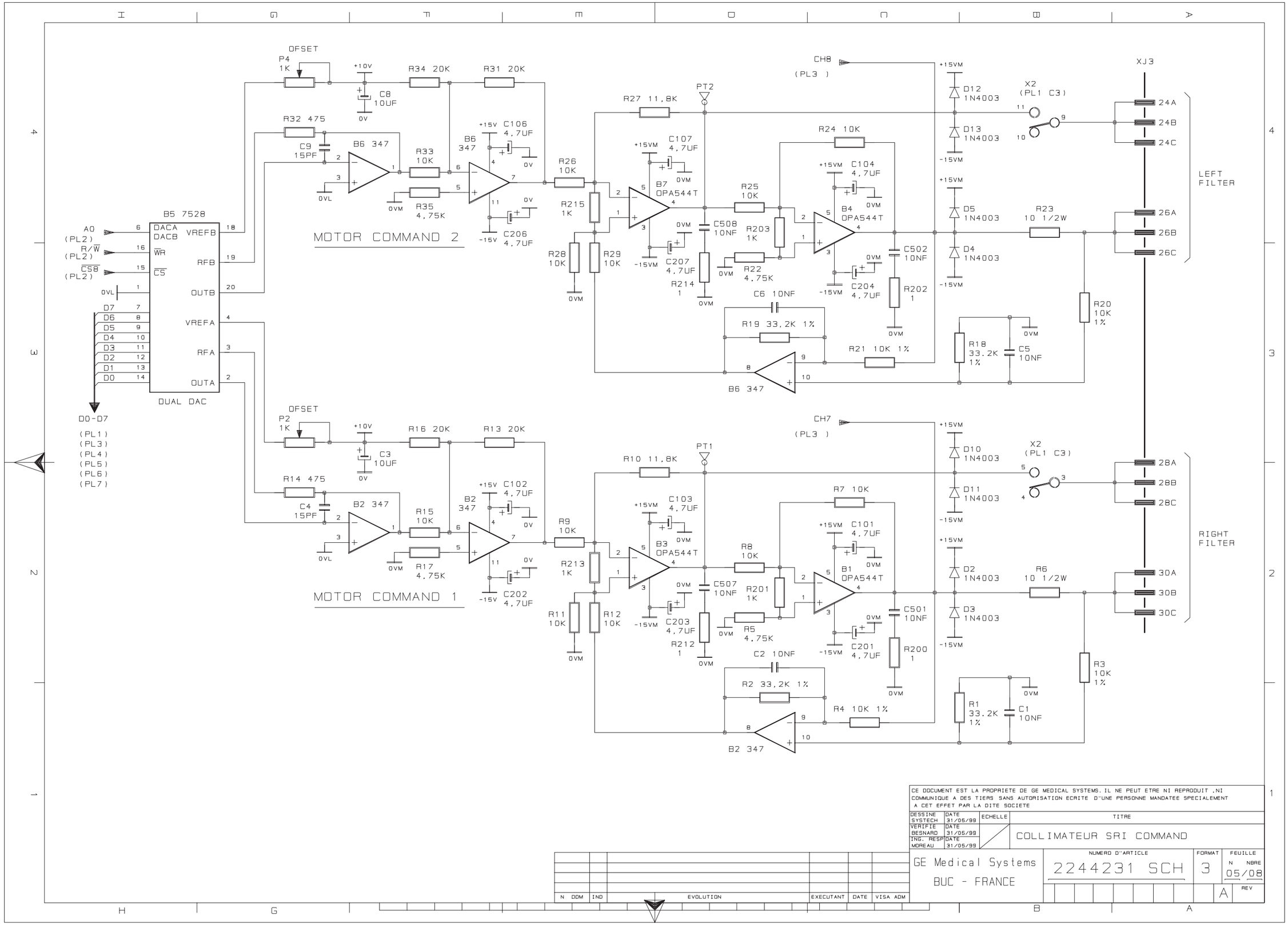
OFSET
P4
1K
+10V
C8
10UF
0V
R34 20K
R31 20K
R32 475
C9
15PF
B6 347
R33
10K
R35
4,75K
0VM
0VL
+15V C106
4,7UF
B6
347
0V
-15V C206
4,7UF
MOTOR COMMAND 2
B5 7528
DACA
DACB
VREFB
WR
RFB
CS
OUTB
VREFA
RFA
OUTA
DUAL DAC
A0
(PL2)
R/W
(PL2)
CS8
(PL2)
0VL
D7
D6
D5
D4
D3
D2
D1
D0
D0-D7
(PL1)
(PL3)
(PL4)
(PL5)
(PL6)
(PL7)
R26
10K
R215
1K
R28
10K
R29
10K
B7
OPA544T
+15VM
C107
4,7UF
0VM
C508
10NF
R203
1K
R22
4,75K
C207
4,7UF
-15VM
R214
1
PT2
R27 11,8K
R24 10K
R25
10K
B4
OPA544T
C104
4,7UF
C502
10NF
C204
4,7UF
R202
1
C6 10NF
R19 33,2K 1%
R21 10K 1%
B6 347
CH8
(PL3)
D12
1N4003
D13
1N4003
D5
1N4003
D4
1N4003
D10
1N4003
D11
1N4003
D2
1N4003
D3
1N4003
X2
(PL1 C3)
XJ3
24A
24B
24C
26A
26B
26C
28A
28B
28C
30A
30B
30C
LEFT
FILTER
RIGHT
FILTER
R23
10 1/2W
R6
10 1/2W
R20
10K
1%
R3
10K
1%
R18
33.2K
1%
C5
10NF
R1
33.2K
1%
C1
10NF
OFSET
P2
1K
+10V
C3
10UF
0V
R16 20K
R13 20K
R14 475
C4
15PF
B2 347
R15
10K
R17
4,75K
0VM
0VL
+15V C102
4,7UF
B2
347
0V
-15V C202
4,7UF
MOTOR COMMAND 1
R9
10K
R213
1K
R11
10K
R12
10K
B3
OPA544T
+15VM
C103
4,7UF
0VM
C507
10NF
R201
1K
R5
4,75K
C203
4,7UF
-15VM
R212
1
PT1
R10 11,8K
R7 10K
R8
10K
B1
OPA544T
C101
4,7UF
C501
10NF
C201
4,7UF
R200
1
C2 10NF
R2 33,2K 1%
R4 10K 1%
B2 347
CH7
(PL3)
CE DOCUMENT EST LA PROPRIETE DE GE MEDICAL SYSTEMS. IL NE PEUT ETRE NI REPRODUIT .NI
COMMUNIQUE A DES TIERS SANS AUTORISATION ECRITE D"UNE PERSONNE MANDATEE SPECIALEMENT
A CET EFFET PAR LA DITE SOCIETE
DESSINE SYSTECH 31/05/99
VERIFIE BESNARD 31/05/99
ING. RESP MOREAU 31/05/99
ECHELLE
TITRE
COLLIMATEUR SRI COMMAND
GE Medical Systems
BUC - FRANCE
NUMERO D"ARTICLE
2244231 SCH
FORMAT
3
FEUILLE
N NBRE
05/08
REV
A
N DDM IND EVOLUTION EXECUTANT DATE VISA ADM

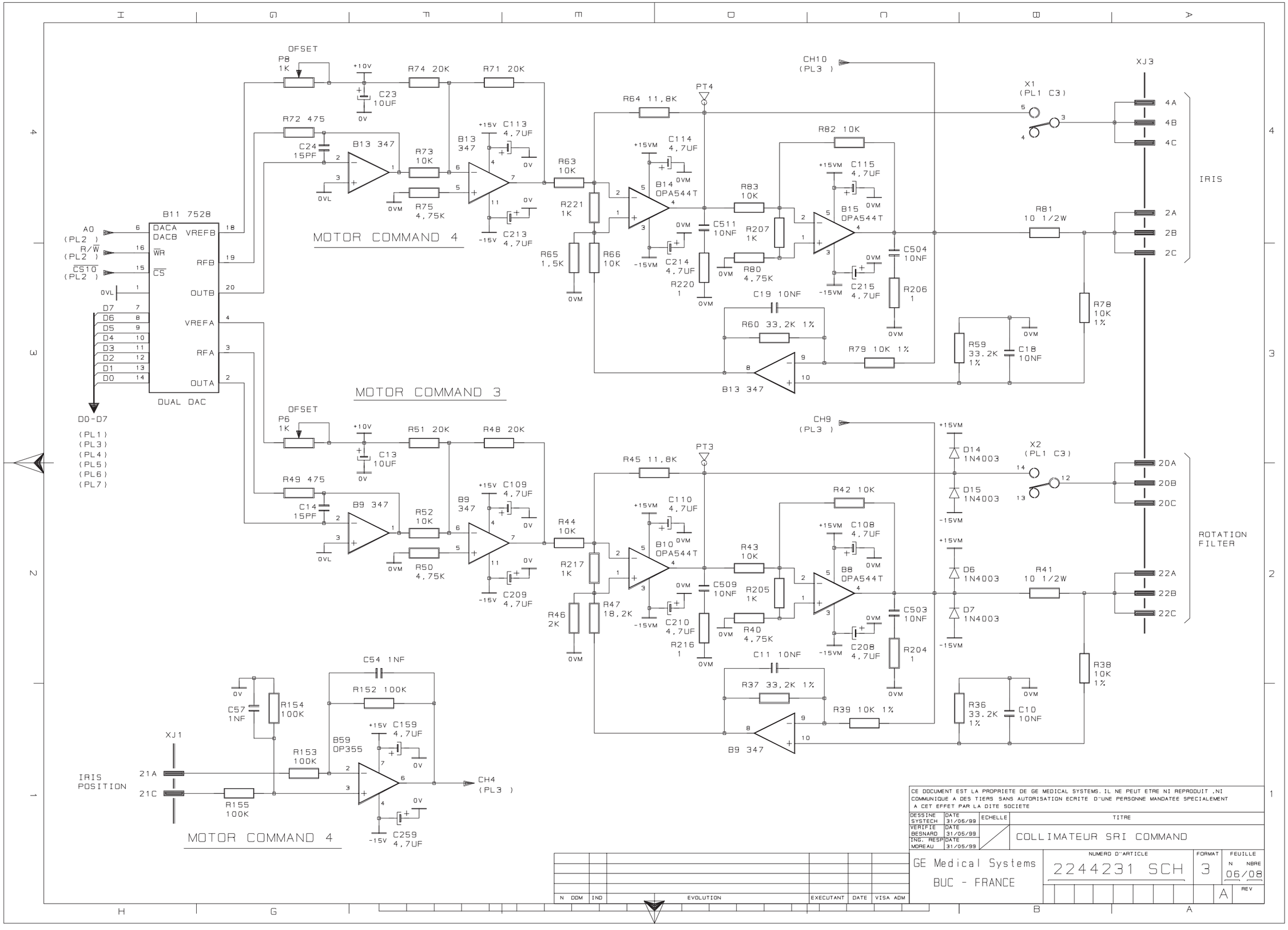

CE DOCUMENT EST LA PROPRIETE DE GE MEDICAL SYSTEMS. IL NE PEUT ETRE NI REPRODUIT .NI COMMUNIQUE A DES TIERS SANS AUTORISATION ECRITE D''UNE PERSONNE MANDATEE SPECIALEMENT A CET EFFET PAR LA DITE SOCIETE

DESSINE	DATE	ECHELLE	TITRE
SYSTECH	31/05/99		
VERIFIE	DATE		COLLIMATEUR SRI COMMAND
BESNARD	31/05/99		
ING. RESP	DATE		
MOREAU	31/05/99		

N DDM	IND	EVOLUTION	EXECUTANT	DATE	VISA ADM

GE Medical Systems
BUC - FRANCE

NUMERO D''ARTICLE	FORMAT	FEUILLE
2244231 SCH	3	N NBRE 06/08

REV A

FRONTAL POSITIONER RACK

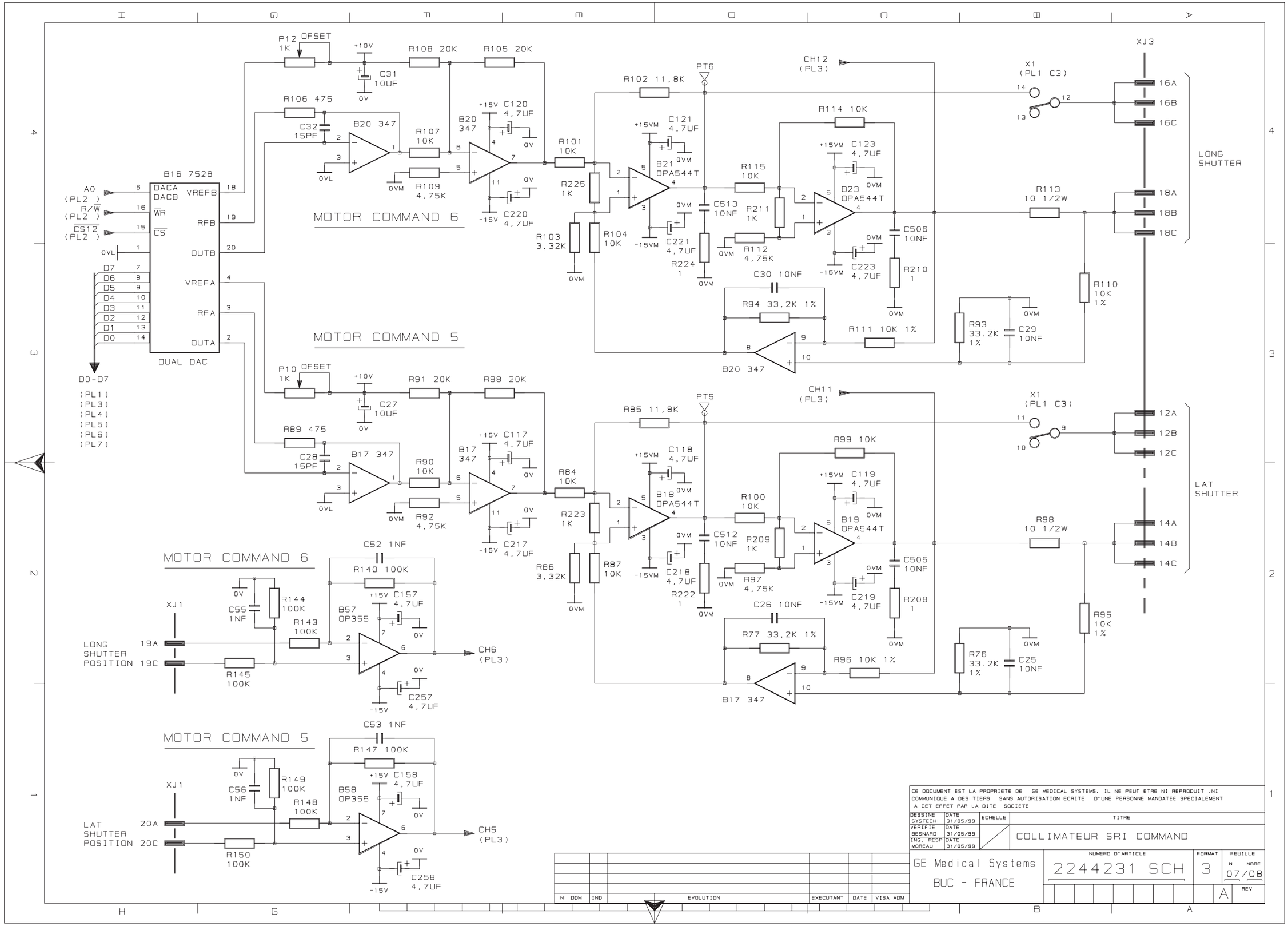
B16 7528
DACA
DACB
VREFB
WR
CS
RFB
OUTB
VREFA
RFA
OUTA
DUAL DAC
A0 (PL2)
R/W (PL2)
CS12 (PL2)
D7
D6
D5
D4
D3
D2
D1
D0
D0-D7
(PL1)
(PL3)
(PL4)
(PL5)
(PL6)
(PL7)
MOTOR COMMAND 6
MOTOR COMMAND 5
P12 OFSET 1K
P10 OFSET 1K
R108 20K
R105 20K
R91 20K
R88 20K
R106 475
R89 475
C32 15PF
C28 15PF
B20 347
B17 347
R107 10K
R90 10K
R109 4,75K
R92 4,75K
C31 10UF
C27 10UF
C120 4,7UF
C117 4,7UF
C220 4,7UF
C217 4,7UF
R101 10K
R84 10K
R225 1K
R223 1K
R103 3,32K
R104 10K
R86 3,32K
R87 10K
PT6
PT5
R102 11,8K
R85 11,8K
B21 OPA544T
B18 OPA544T
B19 OPA544T
B20 347
B17 347
C121 4,7UF
C118 4,7UF
C513 10NF
C512 10NF
C221 4,7UF
C218 4,7UF
R224 1
R222 1
R211 1K
R209 1K
R112 4,75K
R97 4,75K
R114 10K
R99 10K
R115 10K
R100 10K
C123 4,7UF
C119 4,7UF
B23 OPA544T
C223 4,7UF
C219 4,7UF
C506 10NF
C505 10NF
R210 1
R208 1
C30 10NF
C26 10NF
R94 33,2K 1%
R77 33,2K 1%
R111 10K 1%
R96 10K 1%
R93 33.2K 1%
R76 33.2K 1%
C29 10NF
C25 10NF
R110 10K 1%
R95 10K 1%
R113 10 1/2W
R98 10 1/2W
CH12 (PL3)
CH11 (PL3)
X1 (PL1 C3)
XJ3
16A
16B
16C
18A
18B
18C
12A
12B
12C
14A
14B
14C
LONG SHUTTER
LAT SHUTTER
MOTOR COMMAND 6
MOTOR COMMAND 5
XJ1
LONG SHUTTER POSITION 19A 19C
LAT SHUTTER POSITION 20A 20C
R144 100K
R143 100K
R145 100K
R140 100K
C55 1NF
C52 1NF
B57 OP355
C157 4,7UF
C257 4,7UF
R149 100K
R148 100K
R150 100K
R147 100K
C56 1NF
C53 1NF
B58 OP355
C158 4,7UF
C258 4,7UF
CH6 (PL3)
CH5 (PL3)
+10V
0V
+15V
-15V
0VM
0VL
CE DOCUMENT EST LA PROPRIETE DE GE MEDICAL SYSTEMS. IL NE PEUT ETRE NI REPRODUIT .NI COMMUNIQUE A DES TIERS SANS AUTORISATION ECRITE D"UNE PERSONNE MANDATEE SPECIALEMENT A CET EFFET PAR LA DITE SOCIETE
DESSINE SYSTECH 31/05/99
VERIFIE BESNARD 31/05/99
ING. RESP MOREAU 31/05/99
ECHELLE
TITRE
COLLIMATEUR SRI COMMAND
GE Medical Systems
BUC - FRANCE
NUMERO D"ARTICLE 2244231 SCH
FORMAT 3
FEUILLE N 07/08
REV A
N DDM IND EVOLUTION EXECUTANT DATE VISA ADM

CONDO	CI	+5VL	0VL	+15V	-15V	+15VM	-15VM
C101 C201	B1					3	5
	B2			4	11		
C103 C203	B3					3	5
C104 C204	B4					3	5
C105	B5	17	5				
C106 C206	B6			4	11		
C107 C207	B7					3	5
C108 C208	B8					3	5
C109 C209	B9			4	11		
C110 C210	B10					3	5
C111	B11	17	5				
C112 C212	B12					3	5
C113 C213	B13			4	11		
C114 C214	B14					3	5
C115 C215	B15					3	5
C116	B16	17	5				
C117 C217	B17			4	11		
C118 C218	B18					3	5
C119 C219	B19					3	5
C120 C220	B20			4	11		
C121 C221	B21					3	5
C122	B22	20	10				
C123 C223	B23					3	5
C124	B24	16	8				
C125	B25	20	10				
C126	B26	20	10				
C127	B27	14	7				
C128	B28	14	7				
C129	B29	14	7				
C130	B30	14	7				
C131	B31	14	7				
C132	B32	16	8				
C133	B33	16	8				
C134	B34	21-7	1				
C135	B35	48	24				
C136	B36	20	10				
C137	B37	20	10				
C138	B38	16	8				
C139	B39	16	8				
C140	B40	16	8				
C141	B41	16	8				
C142	B42	16	8				
C143	B43	16	8				
C144	B44	20	10				
C146	B46	14	7				
C147	B47	14	7				
C148	B48	14	7				
C149	B49	14	7				
C150	B50	14	7				
C151	B51	20	10				
C152	B52	20	10				
C153	B53	20	10				
C154	B54	16	8				
C155	B55	16	8				
C156 C256	B56						
C157 C257	B57			7	4		
C158 C258	B58			7	4		
C159 C259	B59			7	4		
C160	B60	20	10				
C161	B61	20	10				
C163	B63	14	7				
C164	B64	14	7				
C165	B65	9	10				
C166 C266	B66		7				
C167	B67	14	7				
C168	B68	14	7				
C169	B69	16	8				
C170	B70	14	7				
C171	B71	14	7				

NOTA
ALL DECOUPLING CAPACITORS ARE 4.7UF 35V

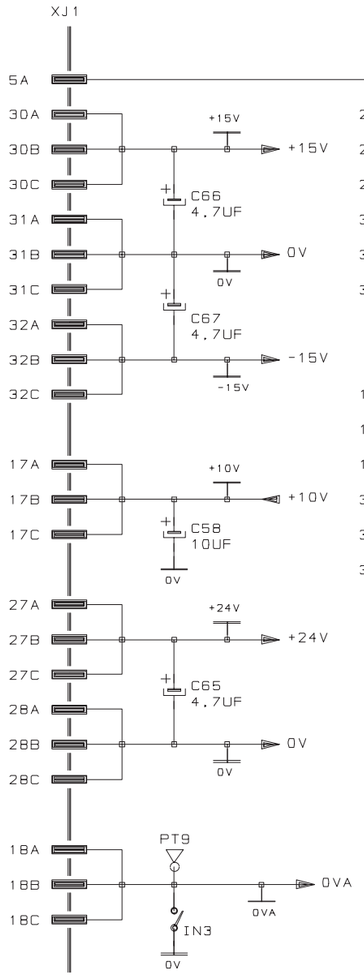

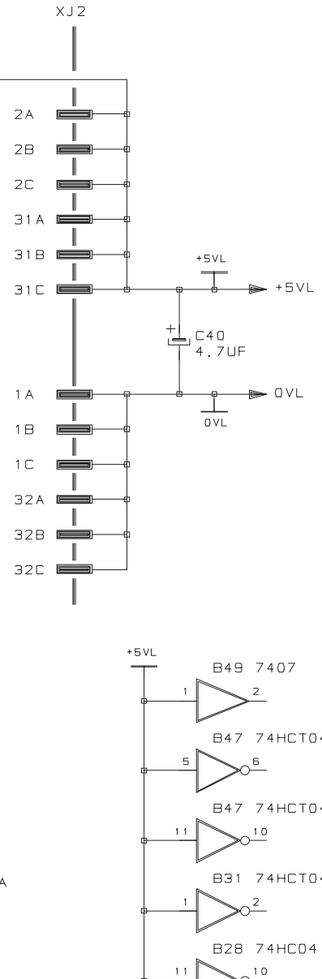

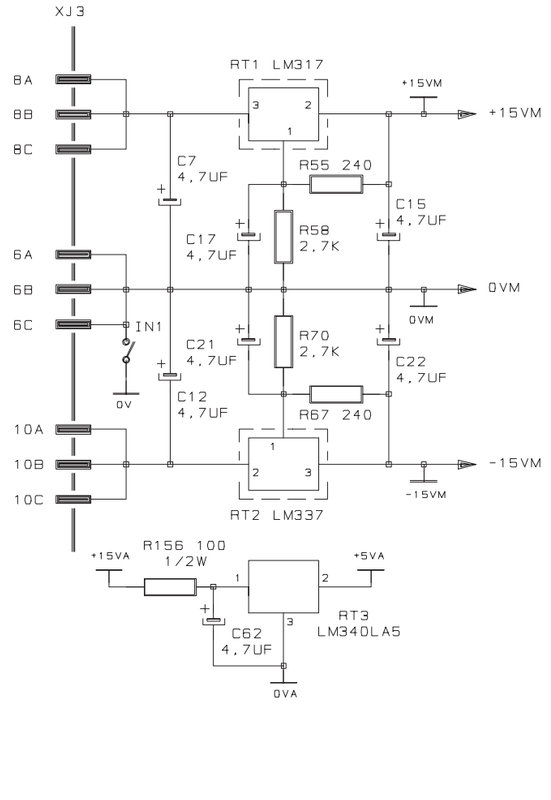

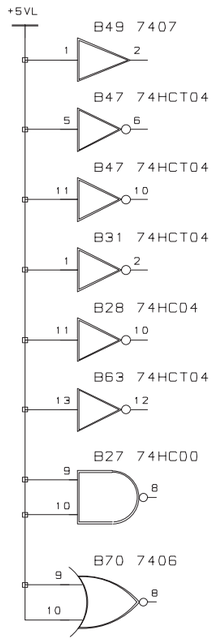

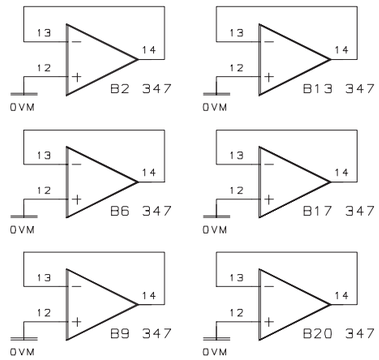

CE DOCUMENT EST LA PROPRIETE DE GE MEDICAL SYSTEMS. IL NE PEUT ETRE NI REPRODUIT .NI COMMUNIQUE A DES TIERS SANS AUTORISATION ECRITE D''UNE PERSONNE MANDATEE SPECIALEMENT A CET EFFET PAR LA DITE SOCIETE

DESSINE SYSTECH	DATE 31/05/99	ECHELLE	TITRE: COLLIMATEUR SRI COMMAND
VERIFIE BESNARD	DATE 31/05/99		
ING. RESP MOREAU	DATE 31/05/99		

GE Medical Systems
BUC - FRANCE

NUMERO D''ARTICLE: 2244231 SCH | FORMAT: 3 | FEUILLE: N NBRE 08/08 | REV: A

N	DDM	IND	EVOLUTION	EXECUTANT	DATE	VISA ADM

FRONTAL POSITIONER RACK

Blank page.

DRAWING NO. 46-264856-S CONT ON SHEET 2 SH NO. 1

GENERAL ELECTRIC

46–264856–S
CONT ON SHEET 2 SH NO. 1

TITLE SCHEMATIC DIAGRAM
BIPLANE_I/F
FIRST MADE FOR LC_POSITIONER

P/L ISSUED
46–264856G1–B

UNLESS OTHERWISE SPECIFIED USE THE FOLLOWING : –

APPLIED PRACTICES	SURFACES	TOLERANCES ON DIMENSIONS		
		DECIMALS (2 PLACES)	DECIMALS (3 PLACES)	ANGLES
46–208600	√	±	±	±

REV 1
46–264856–S
CONT ON SHEET 2 SH NO. 1

CP1 A1 A7
VP1 A1 A7
BLOCK DIAGRAM

MULTIBUS INTERFACE & DISCRETE I/O
SHEET 2

DATA BUS
DAT0–DAT7
XCVR
BUFFER PORT
PORT 2 RD*
CCLK*
IORC*
IOWC*
XACK*
INIT*
BUFFER
BUS CONTROL LOGIC
BINIT*
ADDRESS BUS
AD4–AD13
BUFFER & HI ADD. DECODE
LATCH PORT
DRIVER
PORT 2 WR*
PNP DR
EXP REQ 1–LAT
EXP REQ 2–LAT
EXP REQ 3–LAT
PREP REQ 1–LAT
BUFFER & LOW ADD DECODE
AD0–AD3
PORT RD*WR*
UART RD*WR*
K1
K2
+24V KERNEL–LAT
EXP SW–LAT–SYST BUS
PREP SW–LAT–SYST BUS

SPECIAL DISCRETE INPUTS
SHEET 3

FC EXP GATE LAT SW
BUFFER
CONTACT DE–BOUNCER
AND
RTB5* –LAT (EXP GATE)
+24VDC–SEP
FC FILM IN PLACE LAT SW*
OPTO
CONTACT DE–BOUNCER
AND
JP1
+5V
TEST
NORMAL
NOT
AND
RTB1* –LAT (RECEPTOR RDY)
FC RDY
BUFFER

THE REVISION NUMBER OF THIS SHEET IS THE CONTROL NUMBER OF THIS ENTIRE DOCUMENT. THIS REVISION NUMBER MUST INCREASE WHENEVER ANY SHEET IS CHANGED.

PCN #	-----			169587		---
DATE / SHT		25MAY89	27SEPT89	14JUN93		---
2	A	B	0	1		
3	A	B	0	1		
4	A	B	0	0		
5	A	B	0	0		

REVISIONS		PRINTS TO
B	JWW_25MAY89	404
	GENERAL_CHNG'S	
1	GJO_14JUN93	
	PCN_169587	

MADE BY J.WOODS_7FEB89
ISSUED C. GILLING 23SEPT89
APPROVALS RCR 9/28/89
MEDICALSYSTEMS DIV OR DEPT
MILWAUKEE,WISCONSIN LOCATION

46–264856–S
CONT ON SHEET 2 SH NO. 1

46–264856–S

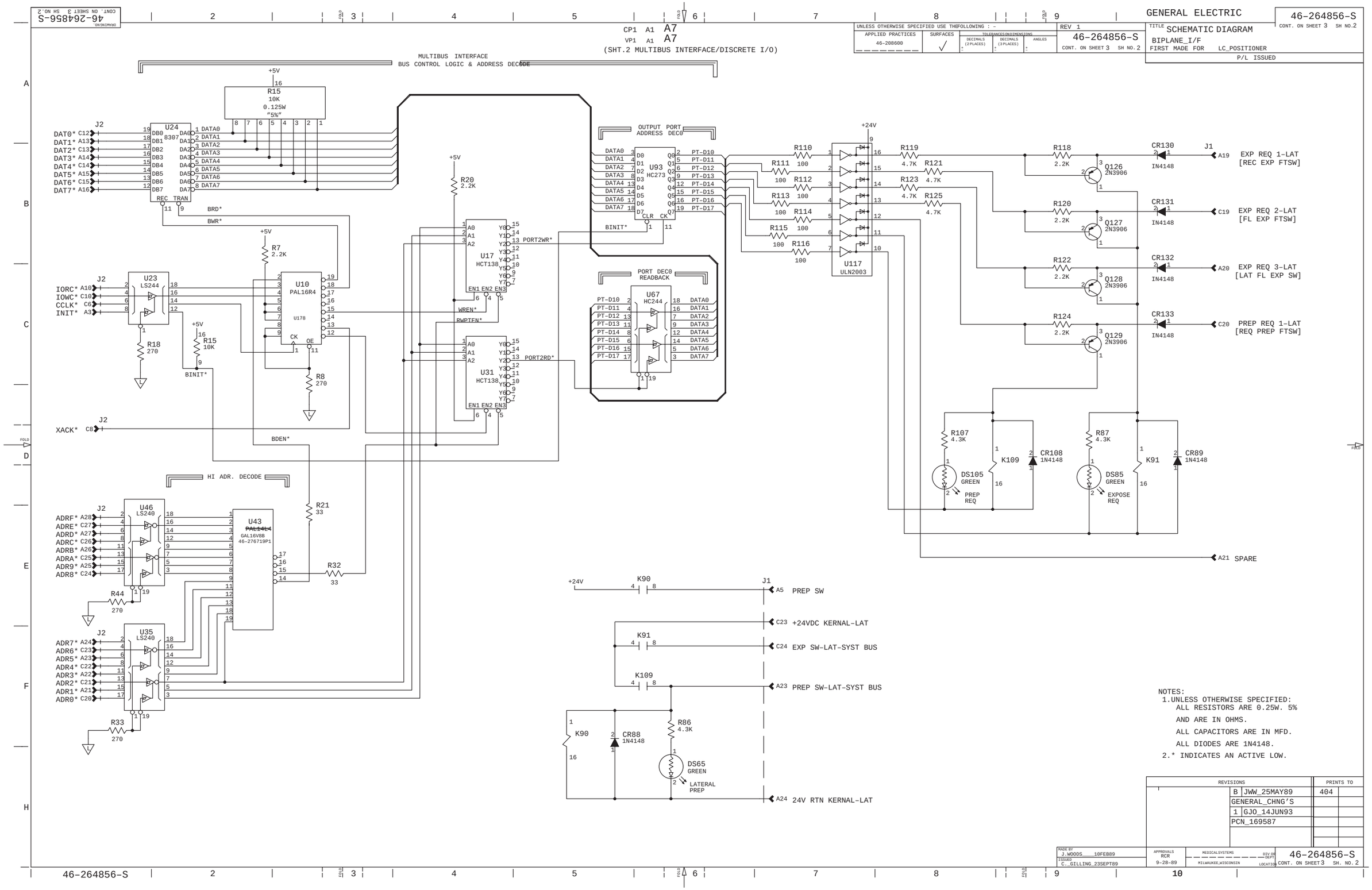
GENERAL ELECTRIC
46-264856-S
SCHEMATIC DIAGRAM
BIPLANE_I/F
FIRST MADE FOR LC_POSITIONER
P/L ISSUED
CP1 A1 A7
VP1 A1 A7
(SHT.2 MULTIBUS INTERFACE/DISCRETE I/O)
MULTIBUS INTERFACE
BUS CONTROL LOGIC & ADDRESS DECODE
OUTPUT PORT ADDRESS DEC0
PORT DEC0 READBACK
HI ADR. DECODE
U24 8307
U93 HC273
U117 ULN2003
U67 HC244
U17 HCT138
U31 HCT138
U10 PAL16R4
U23 LS244
U46 LS240
U35 LS240
U43 GAL16V8B 46-276719P1
R15 10K 0.125W "5%"
R20 2.2K
R7 2.2K
R18 270
R8 270
R21 33
R32 33
R44 270
R33 270
R110 100
R111 100
R112 100
R113 100
R114 100
R115 100
R116 100
R119 4.7K
R121 4.7K
R123 4.7K
R125 4.7K
R118 2.2K
R120 2.2K
R122 2.2K
R124 2.2K
Q126 2N3906
Q127 2N3906
Q128 2N3906
Q129 2N3906
CR130 IN4148
CR131 IN4148
CR132 IN4148
CR133 IN4148
EXP REQ 1–LAT [REC EXP FTSW]
EXP REQ 2–LAT [FL EXP FTSW]
EXP REQ 3–LAT [LAT FL EXP SW]
PREP REQ 1–LAT [REQ PREP FTSW]
A21 SPARE
R107 4.3K
R87 4.3K
DS105 GREEN PREP REQ
DS85 GREEN EXPOSE REQ
K109
K91
CR108 1N4148
CR89 1N4148
+24V
K90
J1
A5 PREP SW
C23 +24VDC KERNAL–LAT
C24 EXP SW–LAT–SYST BUS
A23 PREP SW–LAT–SYST BUS
R86 4.3K
DS65 GREEN LATERAL PREP
CR88 1N4148
A24 24V RTN KERNAL–LAT
BRD*
BWR*
BDEN*
WREN*
RWPTEN*
BINIT*
PORT2WR*
PORT2RD*
XACK*
NOTES:
1.UNLESS OTHERWISE SPECIFIED:
ALL RESISTORS ARE 0.25W. 5%
AND ARE IN OHMS.
ALL CAPACITORS ARE IN MFD.
ALL DIODES ARE 1N4148.
2.* INDICATES AN ACTIVE LOW.
REVISIONS
B JWW_25MAY89
GENERAL_CHNG'S
1 GJO_14JUN93
PCN_169587
PRINTS TO 404
MADE BY J.WOODS 10FEB89
ISSUED C._GILLING_23SEPT89
APPROVALS RCR 9-28-89
MEDICAL SYSTEMS MILWAUKEE,WISCONSIN
46-264856-S CONT. ON SHEET 3 SH. NO. 2

VP1 A1 A7
CP1 A1 A7
SPECIAL DISCRETE INPUTS

GENERAL ELECTRIC

UNLESS OTHERWISE SPECIFIED USE THFOLLOWING : –			REV 1
APPLIED PRACTICES: 46-208600	SURFACES: ✓	TOLERANCES ON DIMENSIONS: DECIMALS (2 PLACES) ±; DECIMALS (3 PLACES) ±; ANGLES ±	46-264856-S CONT ON SHEET 4 SH NO. 3

TITLE: SCHEMATIC DIAGRAM
BIPLANE I/F
FIRST MADE FOR: LC_POSITIONER
P/L ISSUED

46-264856-S
CONT ON SHEET 4 SH NO. 3

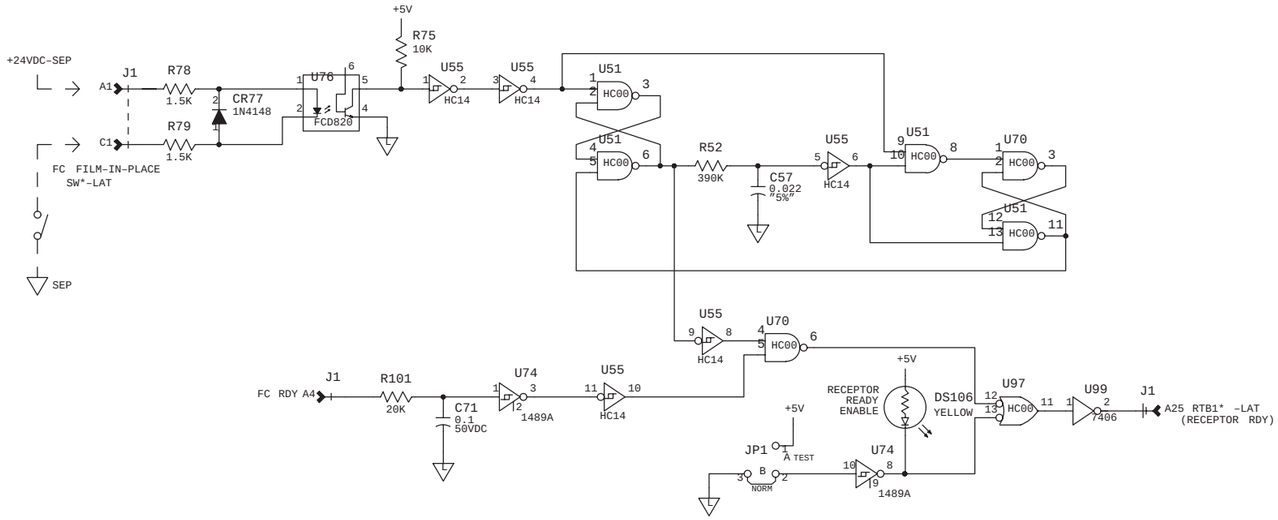

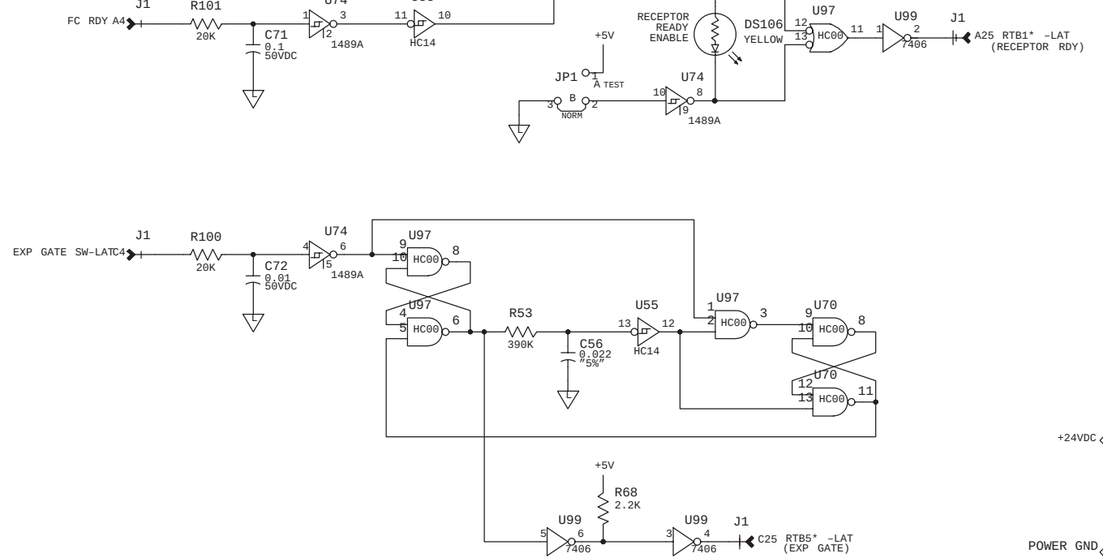

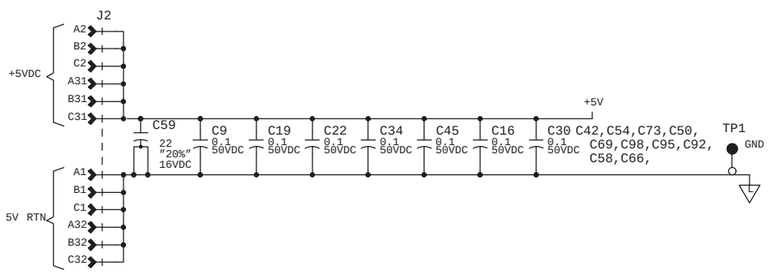

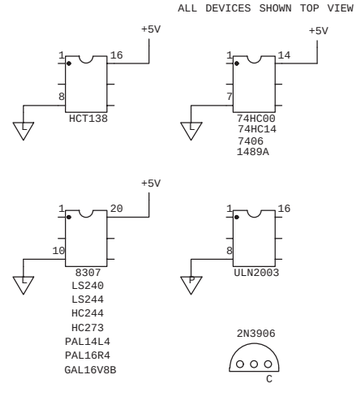

ALL DEVICES SHOWN TOP VIEW

UNUSED DEVICES

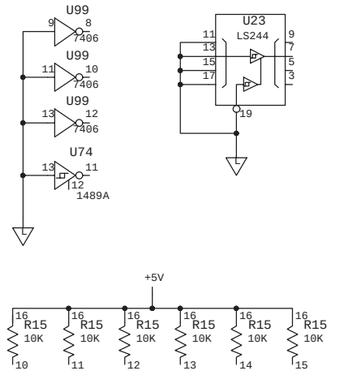

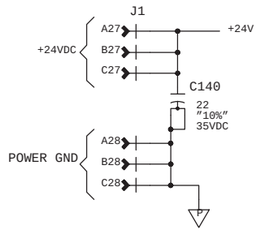

REVISIONS			PRINTS TO
B	JWW_25MAY89		404
GENERAL_CHNG'S			
1	GJO_14JUN93		
PCN_169587			

MADE BY: J.WOODS 7FEB89	APPROVALS: RCR 9/28/93	MEDICALSYSTEMS	DIV OR DEPT	46-264856-S
ISSUED: C. GILLING 23SEPT89		MILWAUKEE,WISCONSIN	LOCATION	CONT ON SHEET 4 SH NO. 3

46-264856-S

FRONTAL POSITIONER RACK

VP1 A1 A7

CP1 A1 A7

MULTIBUS INTERFACE PAL PAL16R4

SIMPLIFIED STATE DIAGRAM

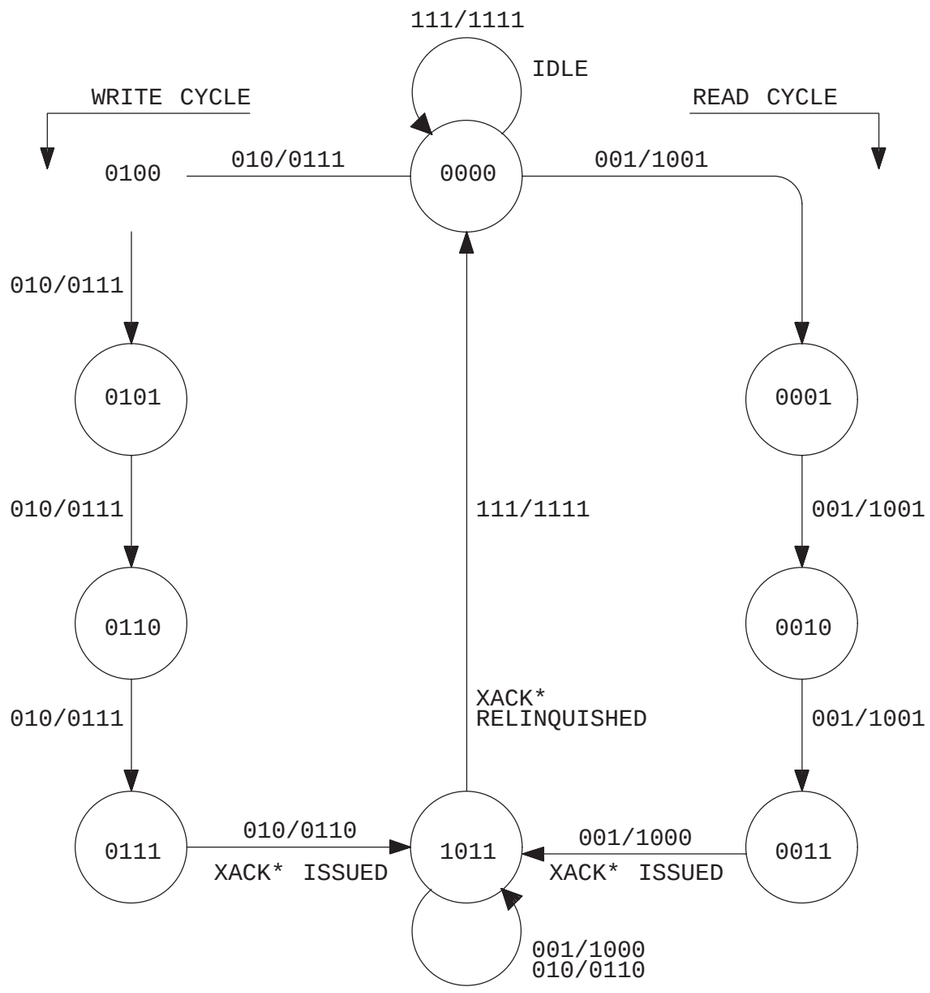

KEY:

EACH STATE XXXX = XEN, WREN, S1, S0

INPUTS YYY = BDEN*, IORC*, IOWC*

OUTPUTS ZZZZ = REC*, TRAN*, RDEN*, XACK*

READ CYCLE TIMING

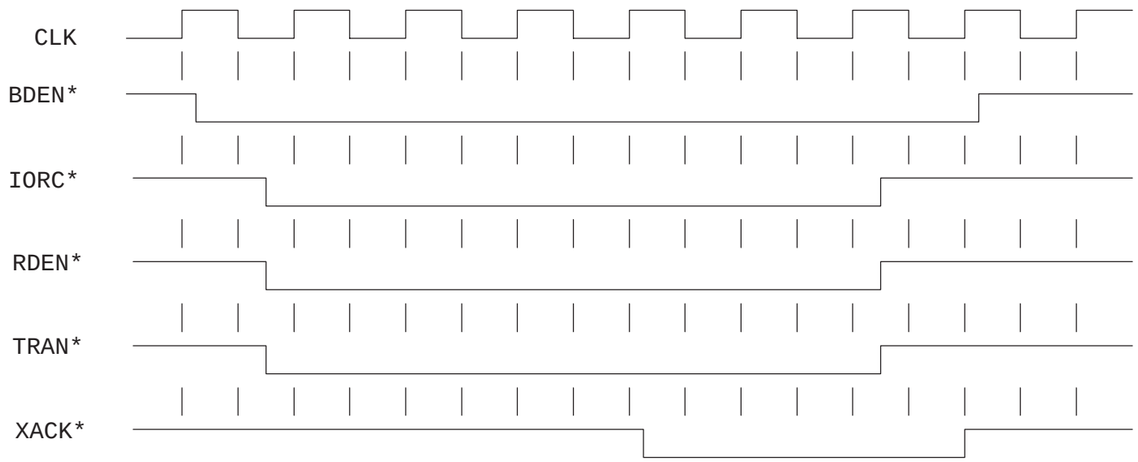

WRITE CYCLE TIMING

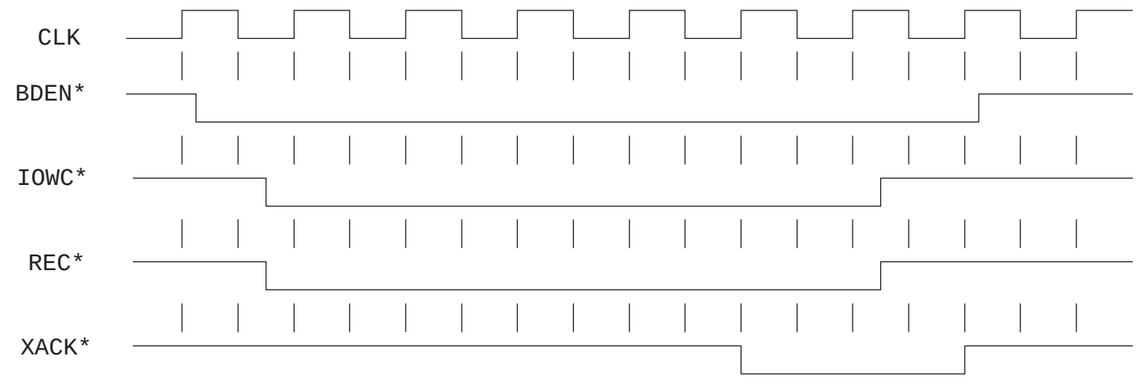

GENERAL ELECTRIC

46–264856–S

CONT ON SHEET 5 SH NO. 4

TITLE SCHEMATIC DIAGRAM
BIPLANE_I/F

FIRST MADE FOR LC_POSITIONER

P/L ISSUED

UNLESS OTHERWISE SPECIFIED USE THE FOLLOWING : –

APPLIED PRACTICES 46–208600

SURFACES √

TOLERANCES ON DIMENSIONS: DECIMALS (2 PLACES) ± .; DECIMALS (3 PLACES) ± .; ANGLES ±

REV B

46–264856–S

CONT ON SHEET 5 SH NO. 4

REVISIONS

			PRINTS TO
B	JWW_25MAY89	GENERAL_CHNG'S	404

MADE BY J.WOODS_7FEB89

ISSUED C.GILLING_23SEPT89

APPROVALS RCR 9–28–89

MEDICALSYSTEMS MILWAUKEE,WISCONSIN

DEV OR DEPT LOCATION

46–264856–S

CONT ON SHEET 5 SH NO. 4

CP1 A1 A7

VP1 A1 A7

SHT.7 PAL2

SECTIONAL ADDRESS DECODE PAL (PAL14L)

ADRF
ADRE
ADRD*
ADRC
ADRB
ADRA
ADR9
ADR8*
ADR7
ADR6
ADR5*
ADR4*

TRUE = 1 FOR INPUT
DEEXH

TRUE = 0 (0.0V)
14
BDEN*
DEE0–DEFFH

TRUE = 1 WHEN
DEFXH

ADR2 19
ADR3 18
ADR4 13
ADR5 12
ADR6 11
ADR7 9
ADR8 8
ADR9 7
ADRA* 6
ADRB* 5
ADRC* 4
ADRD* 3
ADRE* 2
ADRF* 1

PAL2EN

TRUE = 1 (5V)
DECXH

15
RWPTEN*
TRUE = 0 (0.0V)
DEEXH

UNLESS OTHERWISE SPECIFIED USE THE FOLLOWING : –
APPLIED PRACTICES: 46–208600
SURFACES: √
TOLERANCES ON DIMENSIONS: DECIMALS (2 PLACES) ±; DECIMALS (3 PLACES) ±; ANGLES ±
REV B
46–264856–S
CONT ON SHEET -- SH NO. 5
FIRST MADE FOR LC_POSITIONER
P/L ISSUED

GENERAL ELECTRIC
TITLE SCHEMATIC DIAGRAM
BIPLANE_I/F
46–264856–S
CONT ON SHEET -- SH NO. 5

REVISIONS		PRINTS TO
B	JWW_25MAY89	404
	GENERAL_CHNG'S	

MADE BY J.WOODS_7FEB89
ISSUED C.GILLING_23SEPT89
APPROVALS RCR 9-28-89
MEDICALSYSTEMS MILWAUKEE,WISCONSIN
DIV OR DEPT
LOCATION
46–264856–S
CONT ON SHEET -- SH NO. 5

Blank page.

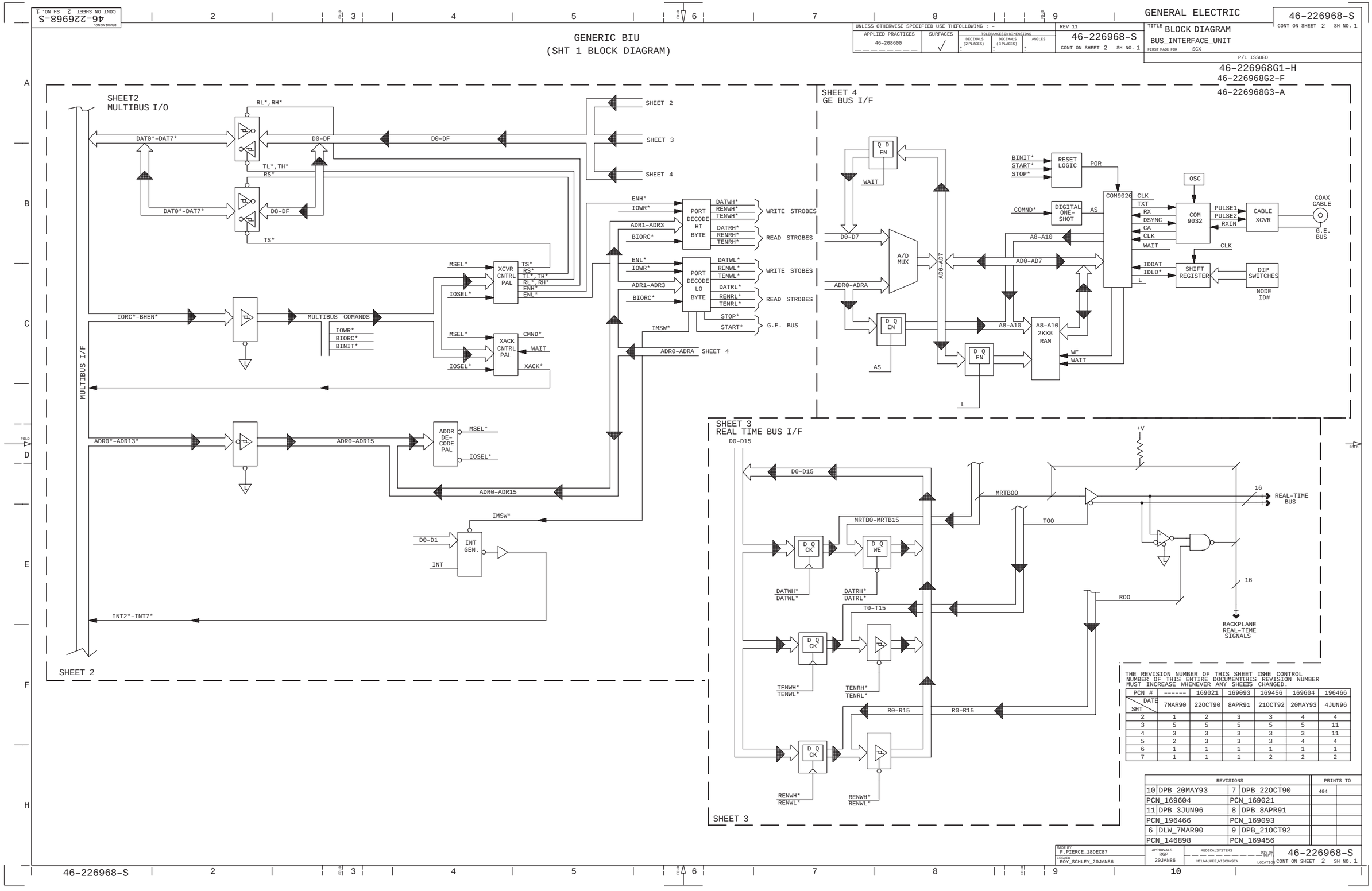
GENERIC BIU
(SHT 1 BLOCK DIAGRAM)
GENERAL ELECTRIC
46-226968-S
CONT ON SHEET 2 SH NO. 1
BLOCK DIAGRAM
BUS_INTERFACE_UNIT
46-226968G1-H
46-226968G2-F
46-226968G3-A
SHEET2
MULTIBUS I/O
MULTIBUS I/F
RL*,RH*
DAT0*-DAT7*
D0-DF
TL*,TH*
RS*
D8-DF
TS*
SHEET 2
SHEET 3
SHEET 4
IORC*-BHEN*
MULTIBUS COMANDS
IOWR*
BIORC*
BINIT*
MSEL*
IOSEL*
XCVR CNTRL PAL
XACK CNTRL PAL
CMND*
WAIT
XACK*
ADR0*-ADR13*
ADR0-ADR15
ADDR DE-CODE PAL
INT GEN.
D0-D1
INT
IMSW*
INT2*-INT7*
ENH*
IOWR*
ADR1-ADR3
BIORC*
PORT DECODE HI BYTE
DATWH*
RENWH*
TENWH*
DATRH*
RENRH*
TENRH*
WRITE STROBES
READ STROBES
ENL*
PORT DECODE LO BYTE
DATWL*
RENWL*
TENWL*
DATRL*
RENRL*
TENRL*
STOP*
START*
G.E. BUS
ADR0-ADRA
SHEET 4
GE BUS I/F
Q D EN
D0-D7
ADR0-ADRA
A/D MUX
AD0-AD7
D Q EN
AS
L
RESET LOGIC
POR
BINIT*
START*
STOP*
DIGITAL ONE-SHOT
COMND*
COM9026
A8-A10
A8-A10 2KX8 RAM
WE
OSC
COM 9032
CLK
TXT
RX
DSYNC
CA
IDDAT
IDLD*
PULSE1
PULSE2
RXIN
CABLE XCVR
COAX CABLE
G.E. BUS
SHIFT REGISTER
DIP SWITCHES
NODE ID#
SHEET 3
REAL TIME BUS I/F
D0-D15
D Q CK
D Q WE
DATWH*
DATWL*
DATRH*
DATRL*
T0-T15
TENWH*
TENWL*
TENRH*
TENRL*
R0-R15
RENWH*
RENWL*
MRTB00
MRTB0-MRTB15
T00
R00
+V
16
REAL-TIME BUS
BACKPLANE REAL-TIME SIGNALS
THE REVISION NUMBER OF THIS SHEET IS THE CONTROL NUMBER OF THIS ENTIRE DOCUMENT. THIS REVISION NUMBER MUST INCREASE WHENEVER ANY SHEET IS CHANGED.
PCN # ------ 169021 169093 169456 169604 196466
DATE 7MAR90 22OCT90 8APR91 21OCT92 20MAY93 4JUN96
SHT
2 1 2 3 3 4 4
3 5 5 5 5 5 11
4 3 3 3 3 3 11
5 2 3 3 3 4 4
6 1 1 1 1 1 1
7 1 1 1 2 2 2
REVISIONS
10 DPB_20MAY93
PCN_169604
11 DPB_3JUN96
PCN_196466
6 DLW_7MAR90
PCN_146898
7 DPB_22OCT90
PCN_169021
8 DPB_8APR91
PCN_169093
9 DPB_21OCT92
PCN_169456
PRINTS TO
404
MADE BY F.PIERCE_18DEC87
ISSUED ROY_SCHLEY_20JAN86
APPROVALS RGP 20JAN86
MEDICALSYSTEMS MILWAUKEE,WISCONSIN
46-226968-S
CONT ON SHEET 2 SH NO. 1

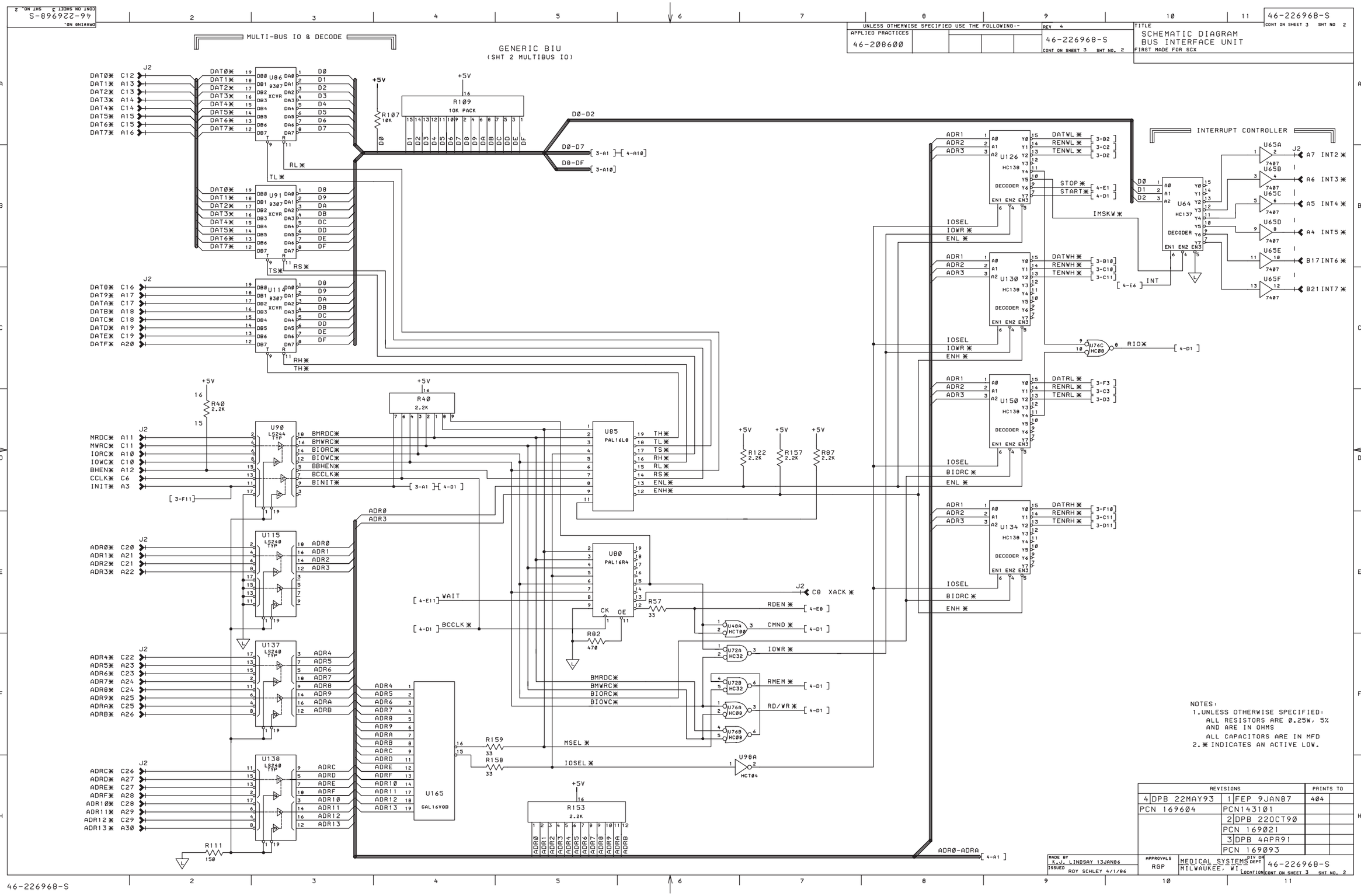
MULTI-BUS IO & DECODE
GENERIC BIU
(SHT 2 MULTIBUS IO)
INTERRUPT CONTROLLER
46-226968-S
SCHEMATIC DIAGRAM
BUS INTERFACE UNIT
FIRST MADE FOR SCX
APPLIED PRACTICES
46-208600
R107 10K
R109 10K PACK
D0-D2
D0-D7
D8-DF
RL*
TL*
RS*
TS*
RH*
TH*
R40 2.2K
R122 2.2K
R157 2.2K
R87 2.2K
U85 PAL16L8
U80 PAL16R4
R82 470
R57 33
R159 33
R158 33
R111 150
U165 GAL16V8B
R153 2.2K
U126 HC138 DECODER
U130 HC138 DECODER
U150 HC138 DECODER
U134 HC138 DECODER
U64 HC137 DECODER
U65A 7407
U65B 7407
U65C 7407
U65D 7407
U65E 7407
U65F 7407
IOSEL
IOWR*
ENL*
ENH*
IMSKW*
INT
RIO*
BIORC*
BMRDC*
BMWRC*
BIOWC*
RDEN*
CMND*
IOWR*
RMEM*
RD/WR*
MSEL*
WAIT
BCCLK*
CB XACK*
ADR0-ADRA
NOTES:
1.UNLESS OTHERWISE SPECIFIED:
ALL RESISTORS ARE 0.25W, 5%
AND ARE IN OHMS
ALL CAPACITORS ARE IN MFD
2.* INDICATES AN ACTIVE LOW.
REVISIONS
4 DPB 22MAY93
PCN 169604
1 FEP 9JAN87
PCN143101
2 DPB 220CT90
PCN 169021
3 DPB 4APR91
PCN 169093
PRINTS TO 404
MADE BY K.J. LINDSAY 13JAN86
ISSUED ROY SCHLEY 4/1/86
APPROVALS RGP
MEDICAL SYSTEMS DIV OR DEPT
MILWAUKEE, WI LOCATION
46-226968-S
CONT ON SHEET 3 SHT NO. 2

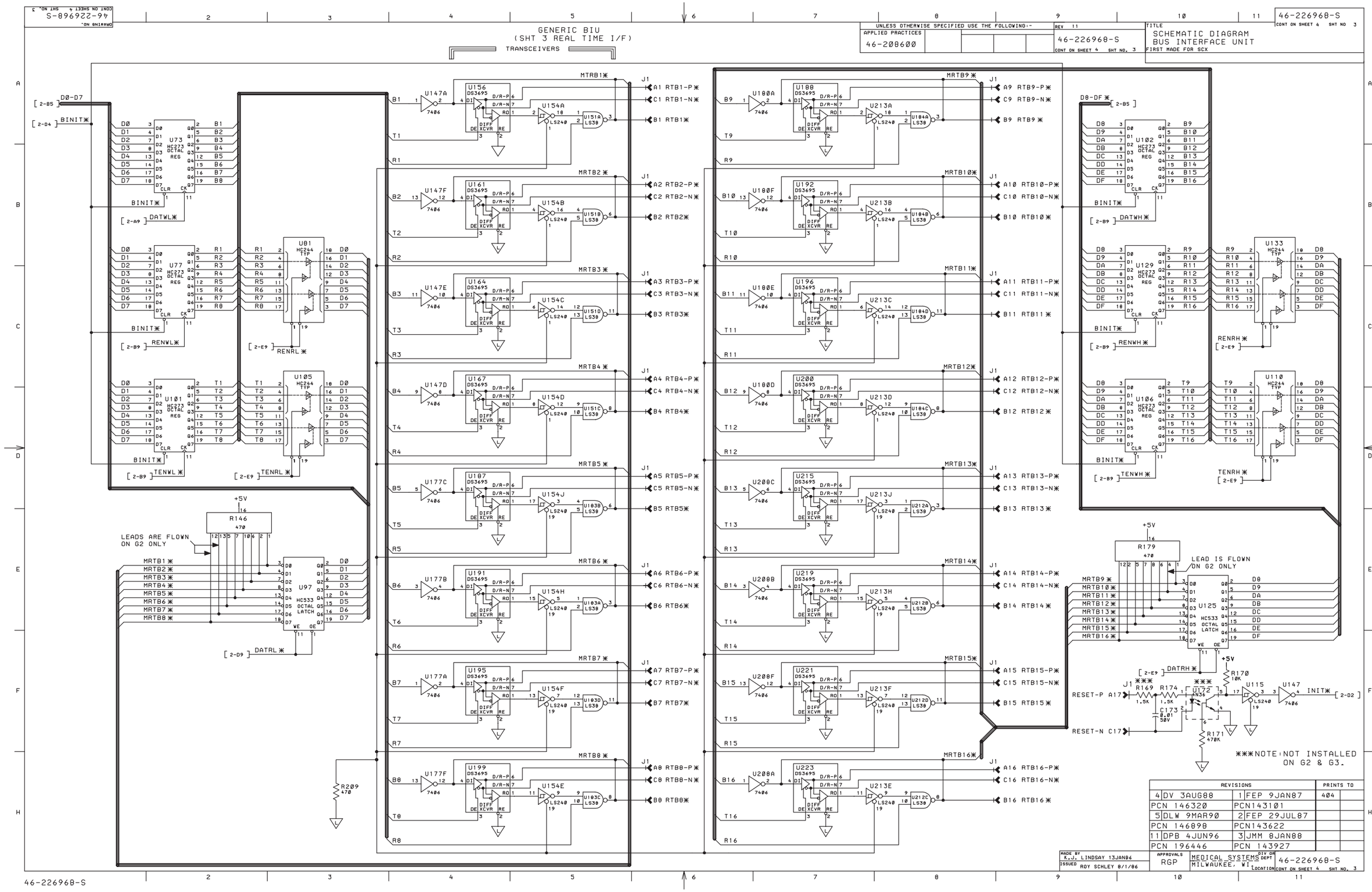

FRONTAL POSITIONER RACK

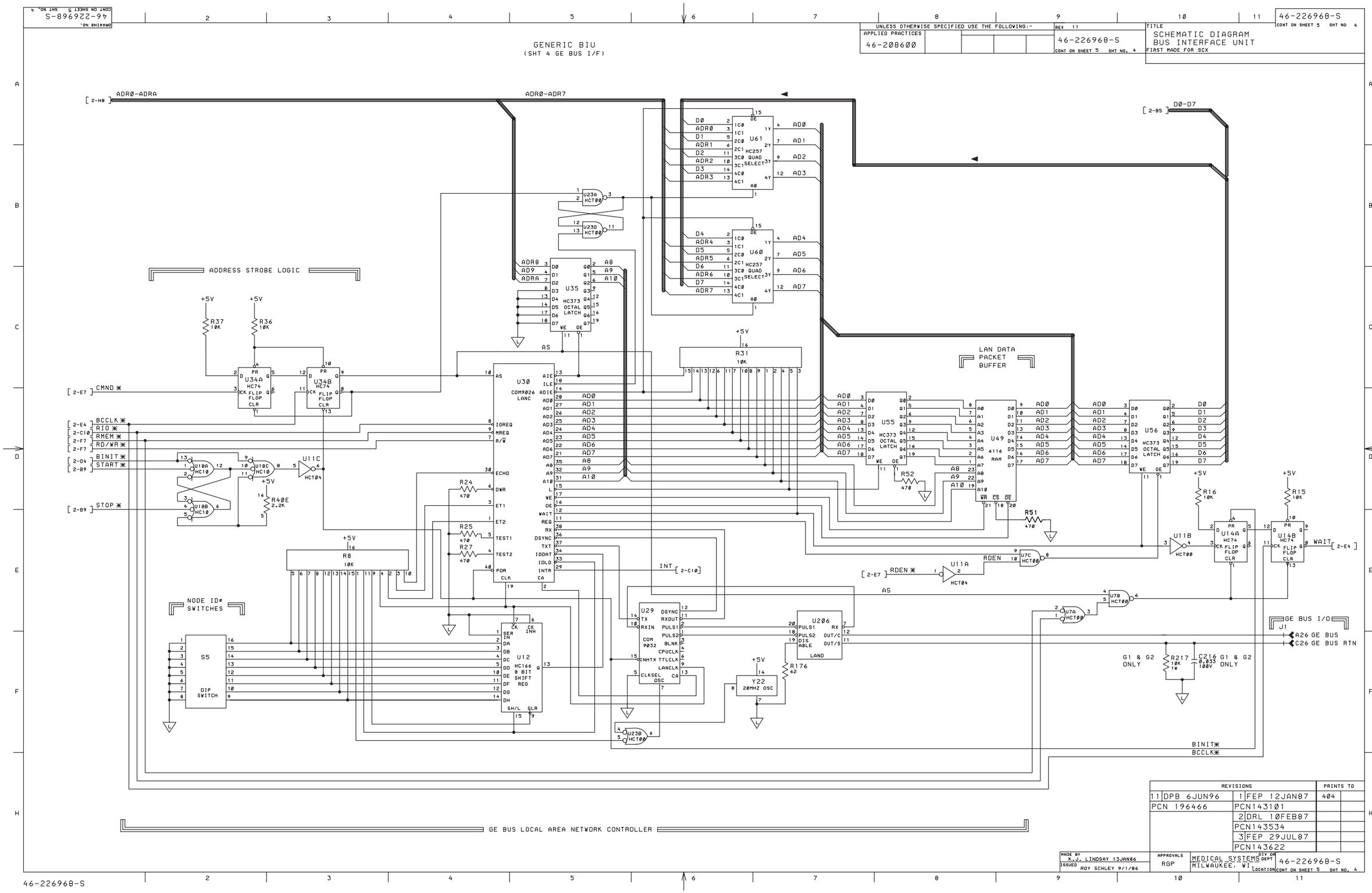

REVISIONS			PRINTS TO
11 DPB 6JUN96	1 FEP 12JAN87	404	
PCN 196466	PCN143101		
	2 DRL 10FEB87		
	PCN143534		
	3 FEP 29JUL87		
	PCN143622		

MADE BY K.J. LINDSAY 13JAN86
ISSUED ROY SCHLEY 9/1/86
APPROVALS RGP
DIV OR DEPT MEDICAL SYSTEMS MILWAUKEE, WI LOCATION
46-226968-S
CONT ON SHEET 5 SHT NO. 4

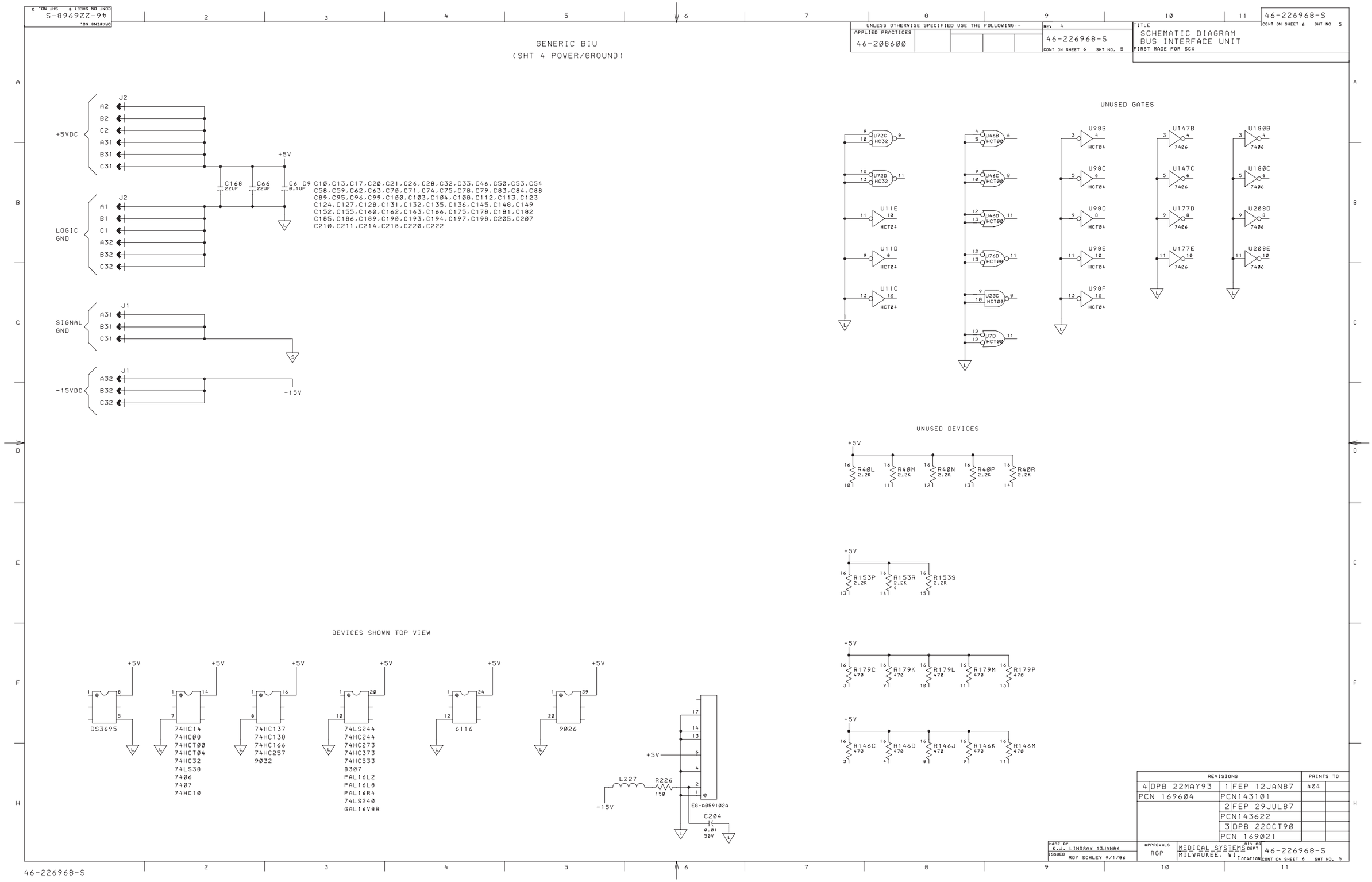
46-226968-S
CONT ON SHEET 6 SHT NO. 5
UNLESS OTHERWISE SPECIFIED USE THE FOLLOWING:-
APPLIED PRACTICES
46-208600
REV 4
46-226968-S
CONT ON SHEET 6 SHT NO. 5
TITLE
SCHEMATIC DIAGRAM
BUS INTERFACE UNIT
FIRST MADE FOR SCX
GENERIC BIU
(SHT 4 POWER/GROUND)
+5VDC
LOGIC GND
SIGNAL GND
-15VDC
J2
J1
C168 22UF
C66 22UF
C6 C9 0.1UF
C10,C13,C17,C20,C21,C26,C28,C32,C33,C46,C50,C53,C54
C58,C59,C62,C63,C70,C71,C74,C75,C78,C79,C83,C84,C88
C89,C95,C96,C99,C100,C103,C104,C108,C112,C113,C123
C124,C127,C128,C131,C132,C135,C136,C145,C148,C149
C152,C155,C160,C162,C163,C166,C175,C178,C181,C182
C185,C186,C189,C190,C193,C194,C197,C198,C205,C207
C210,C211,C214,C218,C220,C222
UNUSED GATES
U72C HC32
U72D HC32
U11E HCT04
U11D HCT04
U11C HCT04
U46B HCT00
U46C HCT00
U46D HCT00
U76D HCT00
U23C HCT00
U7D HCT00
U98B HCT04
U98C HCT04
U98D HCT04
U98E HCT04
U98F HCT04
U147B 7406
U147C 7406
U177D 7406
U177E 7406
U180B 7406
U180C 7406
U200D 7406
U200E 7406
UNUSED DEVICES
+5V
R40L 2.2K
R40M 2.2K
R40N 2.2K
R40P 2.2K
R40R 2.2K
R153P 2.2K
R153R 2.2K
R153S 2.2K
R179C 470
R179K 470
R179L 470
R179M 470
R179P 470
R146C 470
R146D 470
R146J 470
R146K 470
R146M 470
DEVICES SHOWN TOP VIEW
DS3695
74HC14
74HC00
74HCT00
74HCT04
74HC32
74LS38
7406
7407
74HC10
74HC137
74HC138
74HC166
74HC257
9032
74LS244
74HC244
74HC273
74HC373
74HC533
8307
PAL16L2
PAL16L8
PAL16R4
74LS240
GAL16V8B
6116
9026
L227
R226 150
-15V
EG-A0591002A
C204 0.01 50V
REVISIONS
4 DPB 22MAY93
PCN 169604
1 FEB 12JAN87
PCN143101
2 FEB 29JUL87
PCN143622
3 DPB 220CT90
PCN 169021
PRINTS TO 404
MADE BY K.J. LINDSAY 13JAN86
ISSUED ROY SCHLEY 9/1/86
APPROVALS RGP
MEDICAL SYSTEMS DIV OR DEPT
MILWAUKEE, WI LOCATION
46-226968-S
CONT ON SHEET 6 SHT NO. 5

GENERIC BIU
(SHT6 BIU PALS)

46–275071P1 PAL16L8
XCVR CONTROL

FOR G1 AND G2

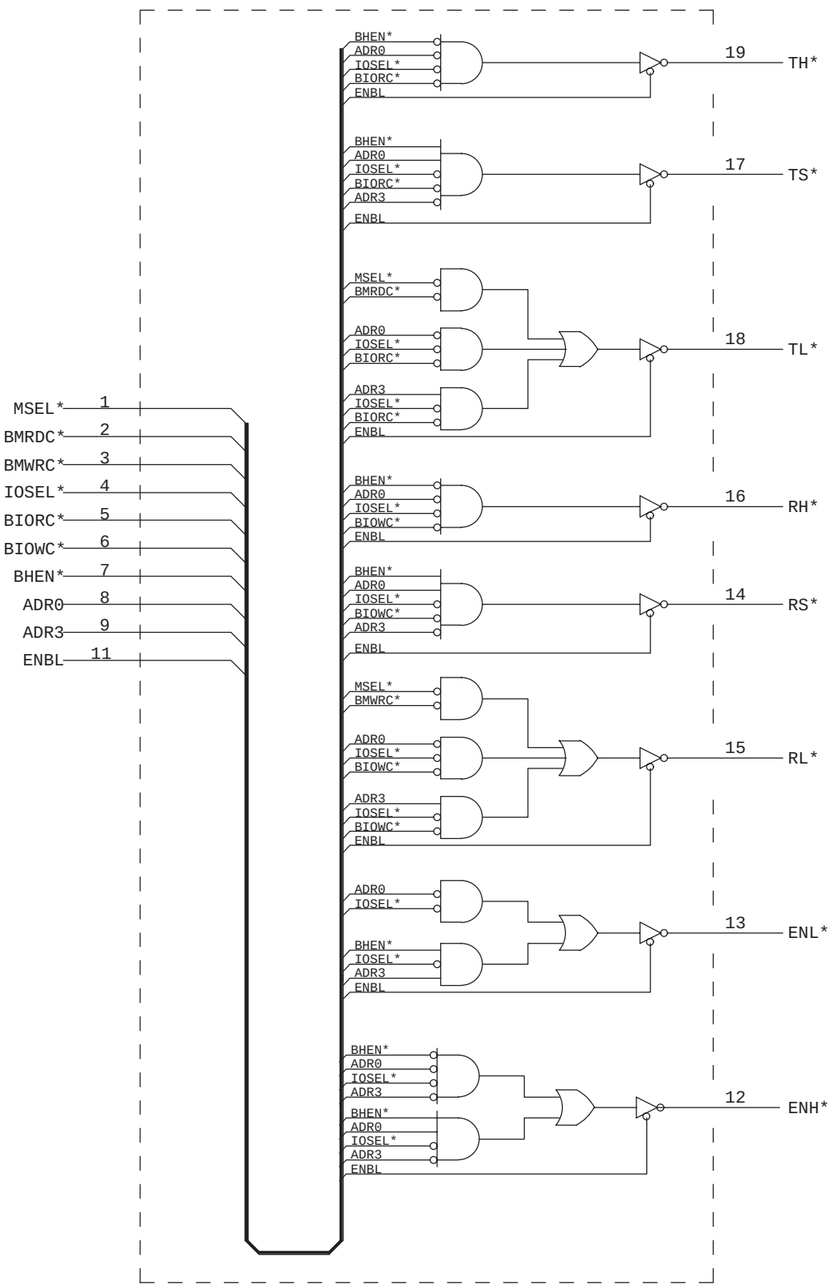

46–275071P3 PAL16L2
BOARD DECODE

FOR G1 ONLY

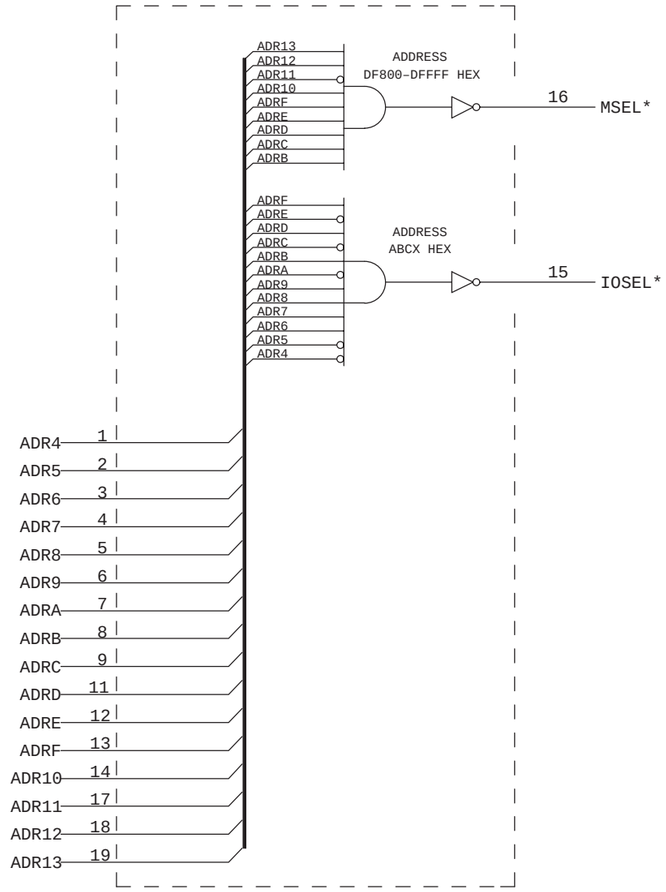

46–275071P7 PAL16L2
BOARD DECODE

FOR G2 ONLY

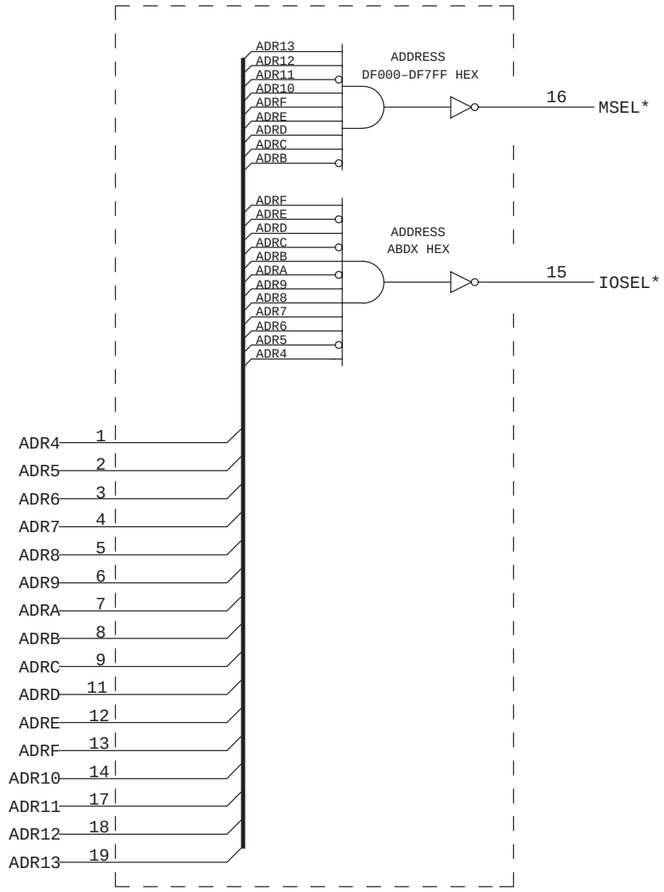

GENERAL ELECTRIC

TITLE SCHEMATIC DIAGRAM
BUS INTERFACE UNIT
FIRST MADE FOR SCX
P/L ISSUED

46–226968–S CONT ON SHEET 7 SH NO. 6

UNLESS OTHERWISE SPECIFIED USE THFOLLOWING : –
APPLIED PRACTICES: 46–208600
SURFACES: ✓
TOLERANCES ON DIMENSIONS: DECIMALS (2 PLACES) ±; DECIMALS (3 PLACES) ±; ANGLES ±

REV 1
46–226968–S CONT ON SHEET 7 SH NO. 6

DRAWING NO. 46–226968–S CONT ON SHEET 7 SH NO. 6

REVISIONS		PRINTS TO
0	FEP 13JAN87	404
	PCN143101	
1	FEP_29JUL87	
	PCN143622	

MADE BY ED NONNWEILER 12/2/86
ISSUED
APPROVALS
MEDICALSYSTEMS MILWAUKEE,WISCONSIN DIV OR DEPT LOCATION
46–226968–S CONT ON SHEET 7 SH NO. 6

46–226968–S

DRAWING NO. 46-226968-S CONT ON SHEET – SH NO. 7

GENERIC BIU

GENERAL ELECTRIC — 46–226968–S — CONT ON SHEET – SH NO. 7

UNLESS OTHERWISE SPECIFIED USE THE FOLLOWING : –
APPLIED PRACTICES: 46–208600 | SURFACES: √ | TOLERANCES ON DIMENSIONS: DECIMALS (2 PLACES) ± | DECIMALS (3 PLACES) ± | ANGLES ±

REV 2 — 46–226968–S — CONT ON SHEET – SH NO. 7

TITLE: SCHEMATIC DIAGRAM
BUS_INTERFACE_UNIT
FIRST MADE FOR SCX
P/L ISSUED

XACK LOGIC PAL
46–275071P8

SIMPLIFIED STATE DIAGRAM

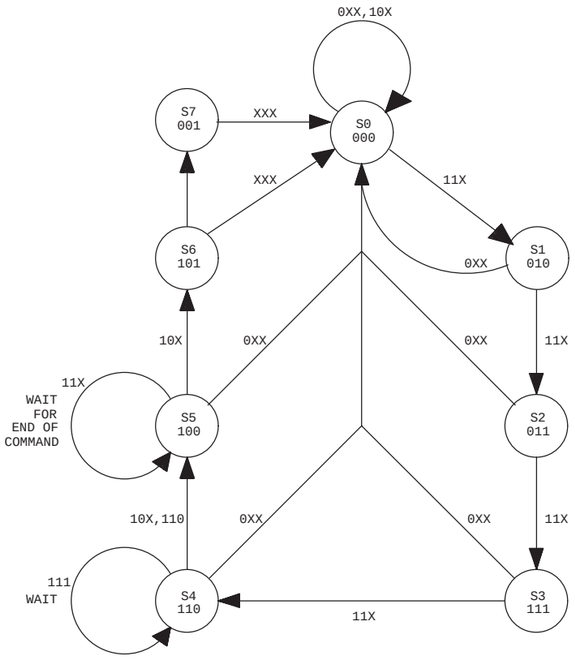

STATES: QC, QB, QA

INPUTS: VALID SELECT, VALID COMMAND, WA

VALID SELECT = MSEL* + IOSEL*

VALID COMMAND = BMRDC* + BMWRC* + BIORC* + BIOWC*

WAIT = WAIT INPUT

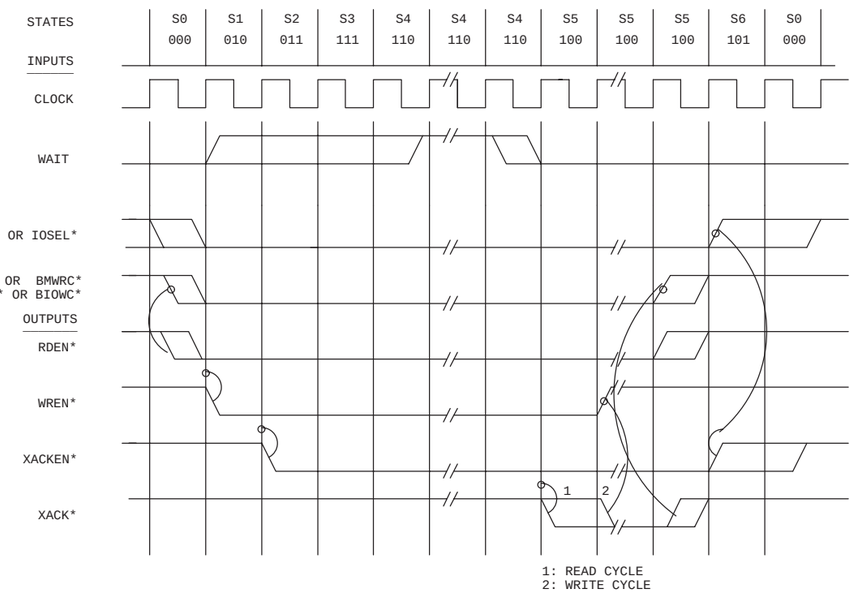

1: READ CYCLE
2: WRITE CYCLE

REVISIONS		PRINTS TO
0	FEP 13JAN87	404
	PCN143101	
1	FEP_29JUL87	
	PCN143622	
2	DPB_21OCT92	
	PCN_169456	

MADE BY: ED_NONNWEILER__12/2/86
ISSUED: ROY_SCHLEY_20JAN86
APPROVALS: RGP 20JAN86
MEDICALSYSTEMS DIV OR DEPT — MILWAUKEE,WISCONSIN LOCATION
46–226968–S CONT ON SHEET – SH NO. 7

46–226968–S

FRONTAL POSITIONER RACK

Blank page.

GRILLE D'EVOLUTION DU DOCUMENT CONSTITUE DE PLUSIEURS FEUILLES

DATES DES MODIFICATIONS		27/10/99	18/01/00																						
NOM DU DESSINATEUR		SEAL IND.	SEAL IND.																						
NUMERO DE MODIFICATION		BUCge45301	BUCge48552																						

NUMERO DE FEUILLE	FORMAT	CODE SUPPORT	INDICES DE REVISIONS																							
01	4	120	A	B	000																					
02	2	120	A	B	000																					
03	2	120	A	B	000																					
04	2	120	A	B	000																					

DESCRIPTIONS DES EVOLUTIONS

DESSINE PAR SEAL IND.	DATE 24/08/99	ECH.	DOCUMENT A FEUILLES MULTIPLES	
VERIFIE PAR JOURDHEUIL	DATE 24/08/99		TITRE	
APPROUVE PAR VANNIER	DATE 24/08/99		RELAY BOARD ZID1 - WIRING CHANGE	

GE Medical Systems BUC - FRANCE	NUMERO DE DOCUMENT								FORMAT	FEUILLE	
	2253722ADW						000	B	4	NO 01 / NBRE 04	
										A	REV ←

Ce document est la propriete de la Societe GE Medical Systems.
Il ne peut etre ni reproduit, ni communique a des tiers sans
l'autorisation ecrite d'une personne mandatee specialement a
cet effet par la dite Societe.

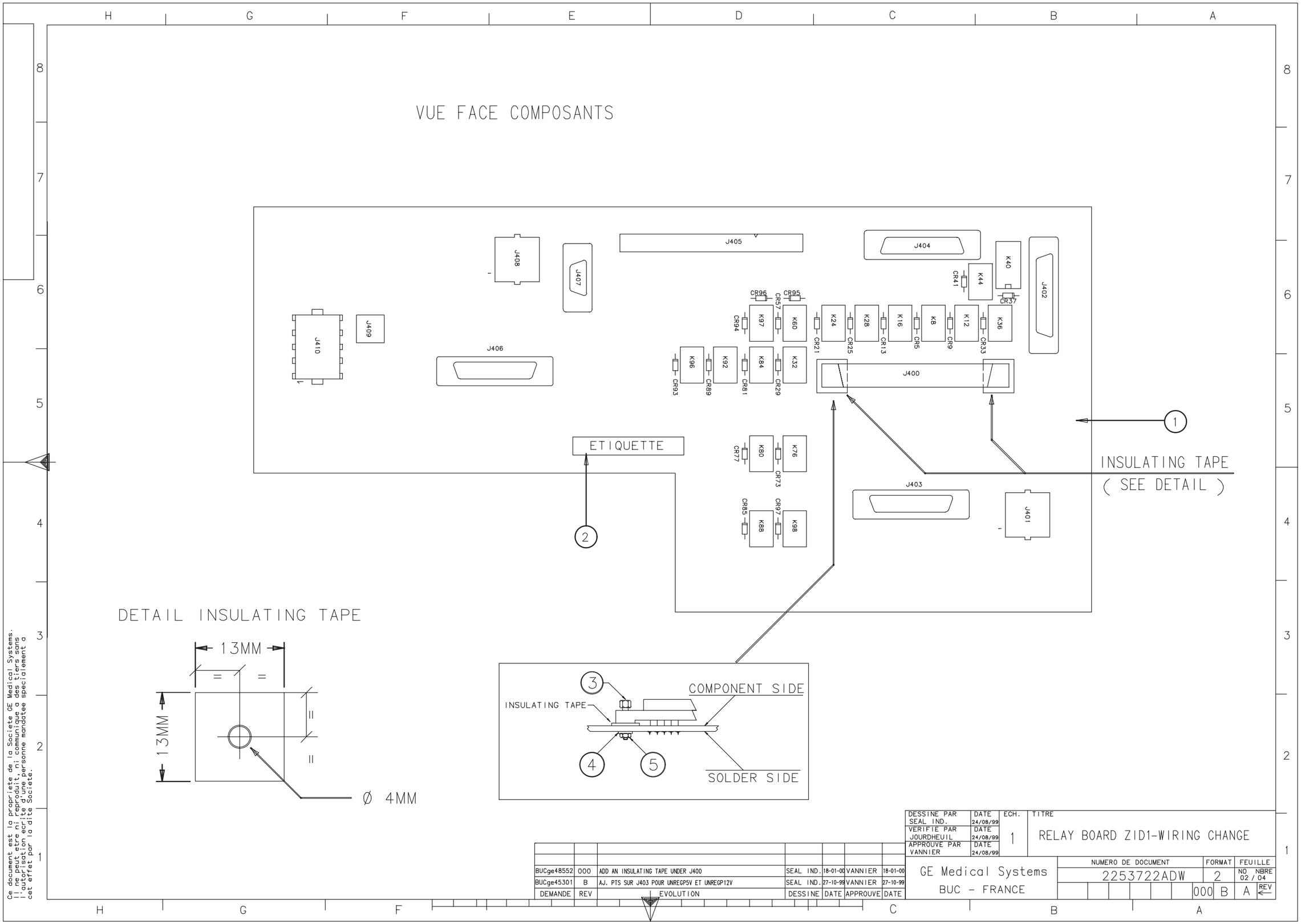

Ce document est la propriete de la Societe GE Medical Systems.
Il ne peut etre ni reproduit, ni communique a des tiers sans
l'autorisation ecrite d'une personne mandatee specialement a
cet effet par la dite Societe.

DESSINE PAR	DATE	ECH.	TITRE
SEAL IND.	24/08/99	1	RELAY BOARD ZID1-WIRING CHANGE
VERIFIE PAR JOURDHEUIL	DATE 24/08/99		
APPROUVE PAR VANNIER	DATE 24/08/99		

DEMANDE	REV	EVOLUTION	DESSINE	DATE	APPROUVE	DATE
BUCge48552	000	ADD AN INSULATING TAPE UNDER J400	SEAL IND.	18-01-00	VANNIER	18-01-00
BUCge45301	B	AJ. PTS SUR J403 POUR UNREGP5V ET UNREGP12V	SEAL IND.	27-10-99	VANNIER	27-10-99

GE Medical Systems
BUC - FRANCE

NUMERO DE DOCUMENT	FORMAT	FEUILLE
2253722ADW	2	NO 02 / 04 NBRE
000 B	A	REV

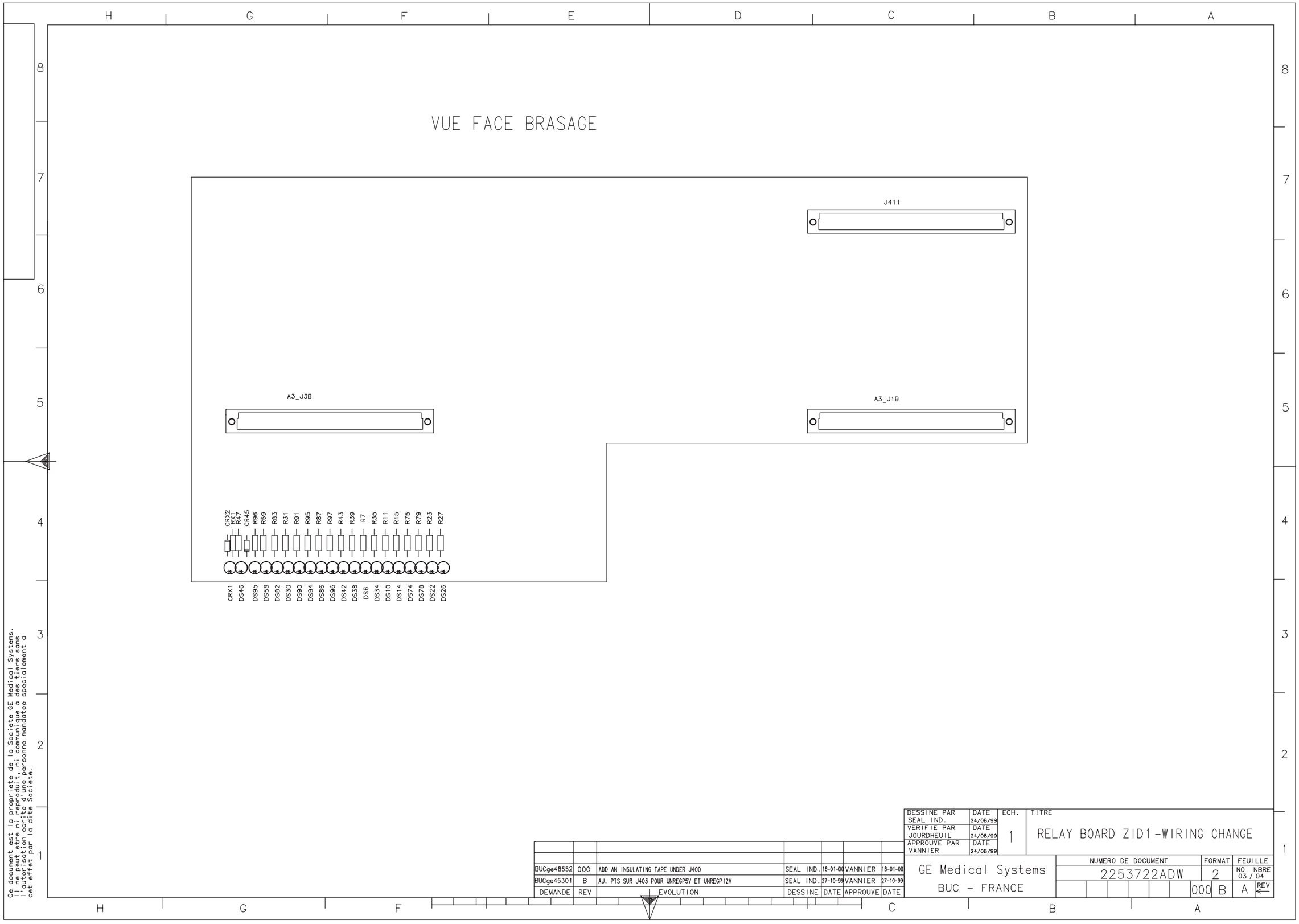
VUE FACE BRASAGE
J411
A3_J3B
A3_J1B
CRX2
RX1
R47
CR45
R96
R59
R83
R31
R91
R95
R87
R97
R43
R39
R7
R35
R11
R15
R75
R79
R23
R27
CRX1
DS46
DS95
DS58
DS82
DS30
DS90
DS94
DS86
DS96
DS42
DS38
DS6
DS34
DS10
DS14
DS74
DS78
DS22
DS26
Ce document est la propriete de la Societe GE Medical Systems.
Il ne peut etre ni reproduit, ni communique a des tiers sans
l'autorisation ecrite d'une personne mandatee specialement a
cet effet par la dite Societe.
DESSINE PAR SEAL IND. DATE 24/08/99
VERIFIE PAR JOURDHEUIL DATE 24/08/99
APPROUVE PAR VANNIER DATE 24/08/99
ECH. 1
TITRE
RELAY BOARD ZID1-WIRING CHANGE
BUCge48552 000 ADD AN INSULATING TAPE UNDER J400 SEAL IND. 18-01-00 VANNIER 18-01-00
BUCge45301 B AJ. PTS SUR J403 POUR UNREGP5V ET UNREGP12V SEAL IND. 27-10-99 VANNIER 27-10-99
DEMANDE REV EVOLUTION DESSINE DATE APPROUVE DATE
GE Medical Systems
BUC - FRANCE
NUMERO DE DOCUMENT 2253722ADW
FORMAT 2
FEUILLE NO NBRE 03 / 04
000 B A REV

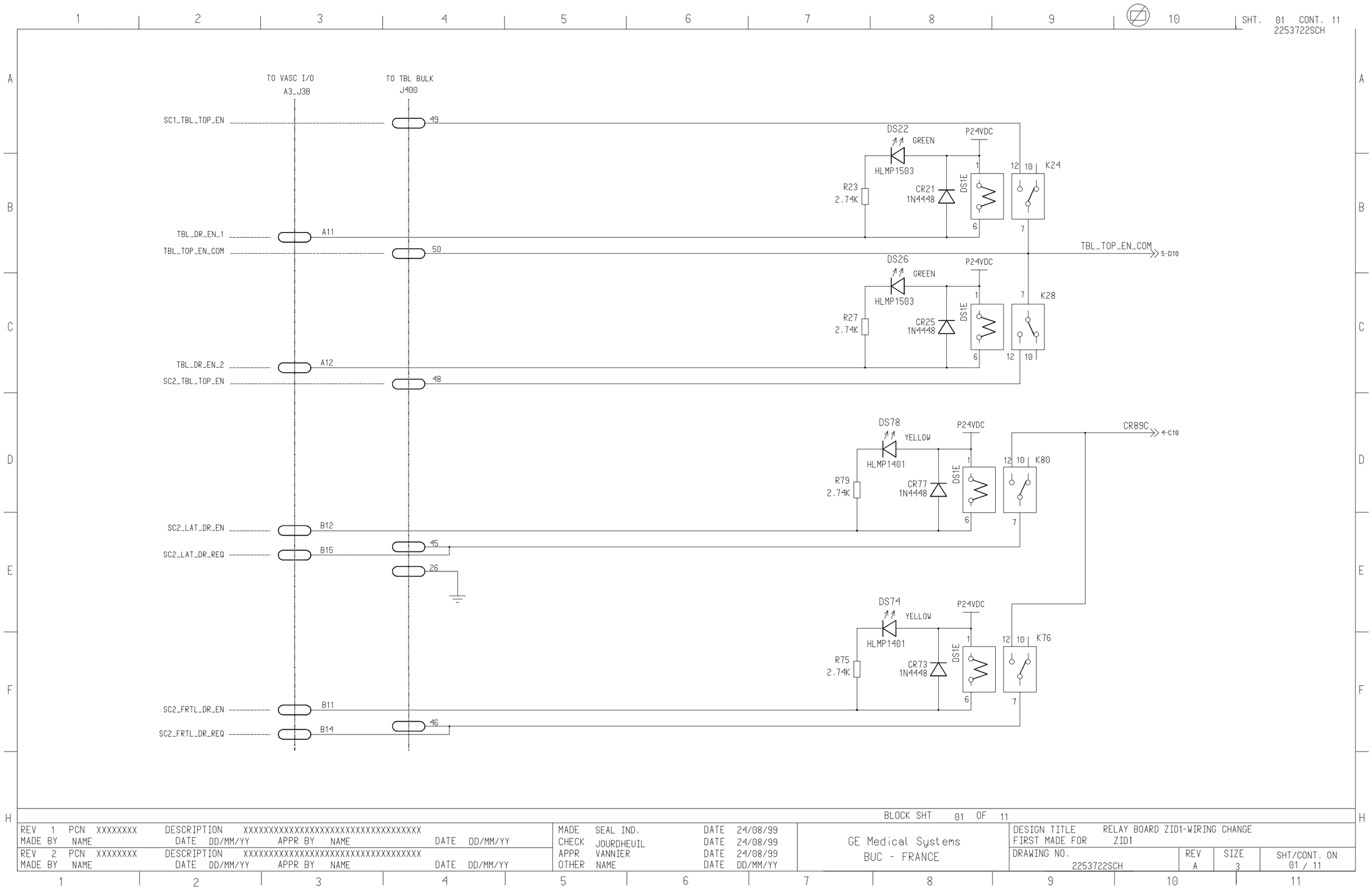
SHT. 01 CONT. 11
2253722SCH
TO VASC I/O
A3_J3B
TO TBL BULK
J400
SC1_TBL_TOP_EN
49
DS22
GREEN
HLMP1503
P24VDC
R23
2.74K
CR21
1N4448
DS1E
K24
TBL_DR_EN_1
A11
TBL_TOP_EN_COM
50
TBL_TOP_EN_COM
5-D10
DS26
GREEN
HLMP1503
P24VDC
R27
2.74K
CR25
1N4448
DS1E
K28
TBL_DR_EN_2
A12
SC2_TBL_TOP_EN
48
DS78
YELLOW
HLMP1401
P24VDC
CR89C
4-C10
R79
2.74K
CR77
1N4448
DS1E
K80
SC2_LAT_DR_EN
B12
SC2_LAT_DR_REQ
B15
45
26
DS74
YELLOW
HLMP1401
P24VDC
R75
2.74K
CR73
1N4448
DS1E
K76
SC2_FRTL_DR_EN
B11
SC2_FRTL_DR_REQ
B14
46
BLOCK SHT 01 OF 11
REV 1 PCN XXXXXXXX DESCRIPTION XXXXXXXXXXXXXXXXXXXXXXXXXXXXXXXXXX
MADE BY NAME DATE DD/MM/YY APPR BY NAME DATE DD/MM/YY
REV 2 PCN XXXXXXXX DESCRIPTION XXXXXXXXXXXXXXXXXXXXXXXXXXXXXXXXXX
MADE BY NAME DATE DD/MM/YY APPR BY NAME DATE DD/MM/YY
MADE SEAL IND. DATE 24/08/99
CHECK JOURDHEUIL DATE 24/08/99
APPR VANNIER DATE 24/08/99
OTHER NAME DATE DD/MM/YY
GE Medical Systems
BUC - FRANCE
DESIGN TITLE RELAY BOARD ZID1-WIRING CHANGE
FIRST MADE FOR ZID1
DRAWING NO. 2253722SCH
REV A
SIZE 3
SHT/CONT. ON 01 / 11

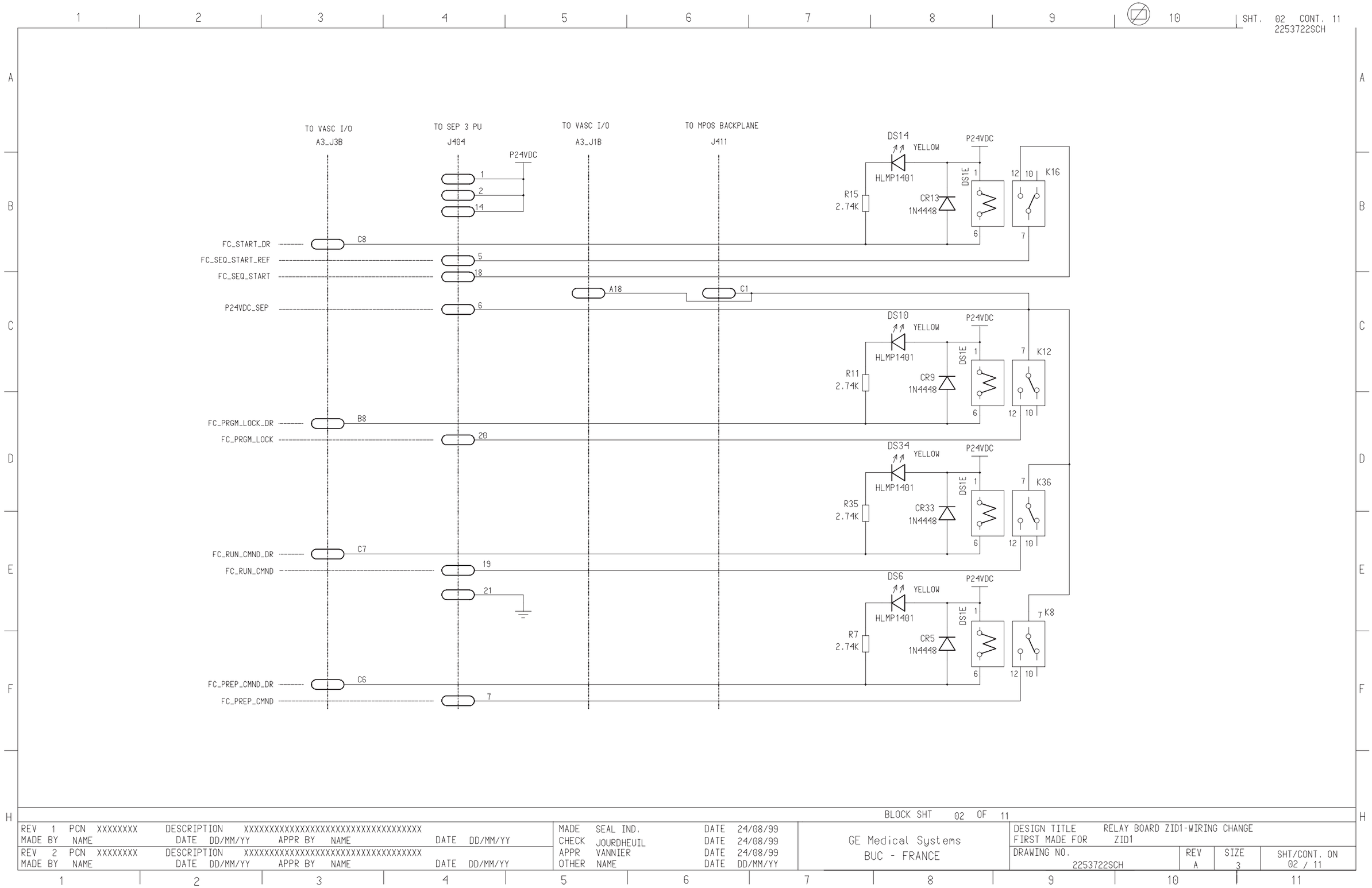

FRONTAL POSITIONER RACK

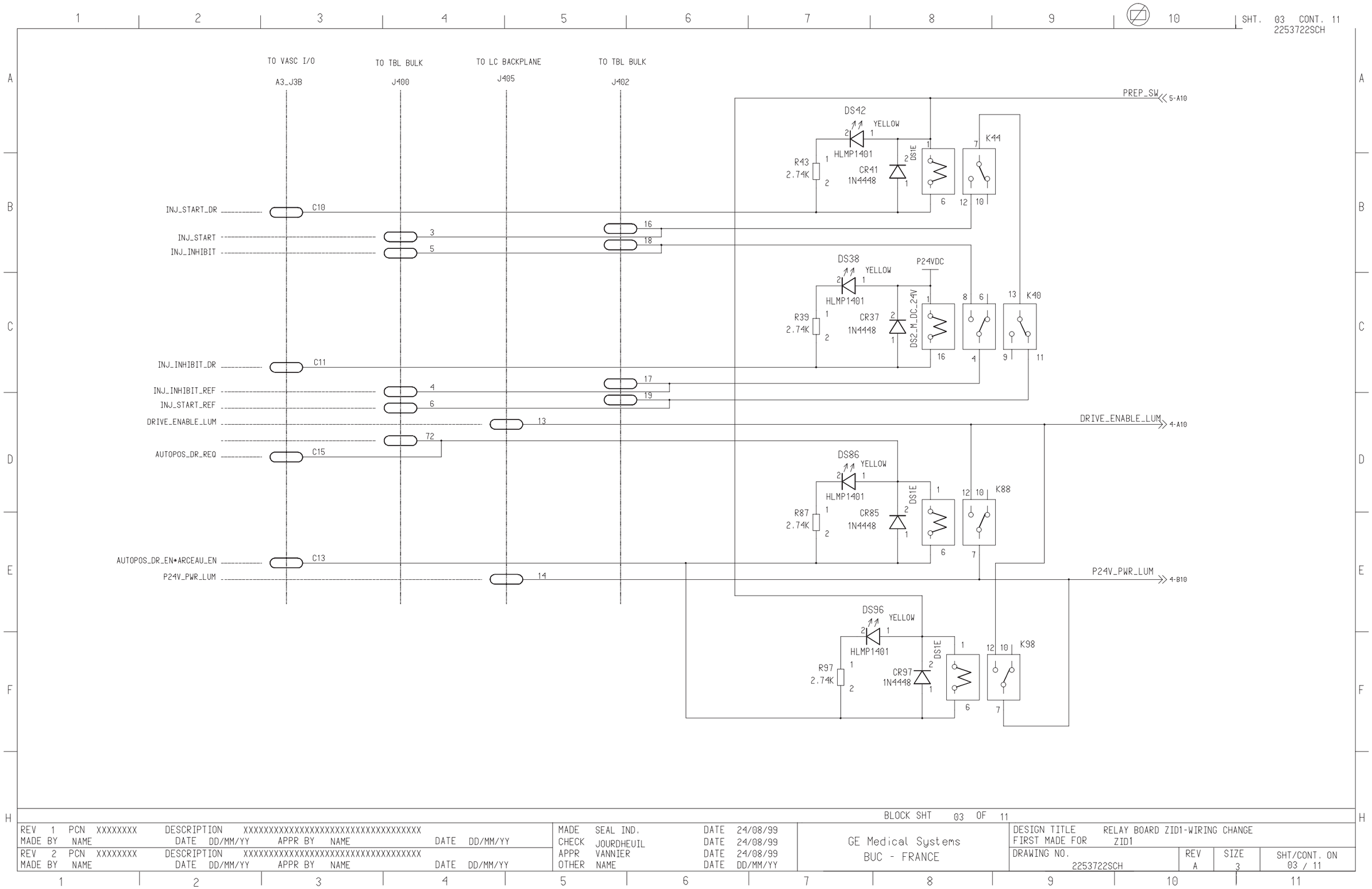
SHT. 03 CONT. 11
2253722SCH
TO VASC I/O
A3_J3B
TO TBL BULK
J400
TO LC BACKPLANE
J405
TO TBL BULK
J402
PREP_SW
5-A10
DS42
YELLOW
HLMP1401
R43
2.74K
CR41
1N4448
DSIE
K44
INJ_START_DR
C10
16
INJ_START
3
18
INJ_INHIBIT
5
DS38
YELLOW
P24VDC
HLMP1401
R39
2.74K
CR37
1N4448
DS2_M_DC_24V
K40
INJ_INHIBIT_DR
C11
17
INJ_INHIBIT_REF
4
19
INJ_START_REF
6
DRIVE_ENABLE_LUM
13
DRIVE_ENABLE_LUM
4-A10
72
AUTOPOS_DR_REQ
C15
DS86
YELLOW
HLMP1401
R87
2.74K
CR85
1N4448
DSIE
K88
AUTOPOS_DR_EN*ARCEAU_EN
C13
P24V_PWR_LUM
14
P24V_PWR_LUM
4-B10
DS96
YELLOW
HLMP1401
R97
2.74K
CR97
1N4448
DSIE
K98
BLOCK SHT 03 OF 11
REV 1 PCN XXXXXXXX DESCRIPTION XXXXXXXXXXXXXXXXXXXXXXXXXXXXXXXXXX
MADE BY NAME DATE DD/MM/YY APPR BY NAME DATE DD/MM/YY
REV 2 PCN XXXXXXXX DESCRIPTION XXXXXXXXXXXXXXXXXXXXXXXXXXXXXXXXXX
MADE BY NAME DATE DD/MM/YY APPR BY NAME DATE DD/MM/YY
MADE SEAL IND. DATE 24/08/99
CHECK JOURDHEUIL DATE 24/08/99
APPR VANNIER DATE 24/08/99
OTHER NAME DATE DD/MM/YY
GE Medical Systems
BUC - FRANCE
DESIGN TITLE RELAY BOARD ZID1-WIRING CHANGE
FIRST MADE FOR ZID1
DRAWING NO. 2253722SCH
REV A
SIZE 3
SHT/CONT. ON 03 / 11

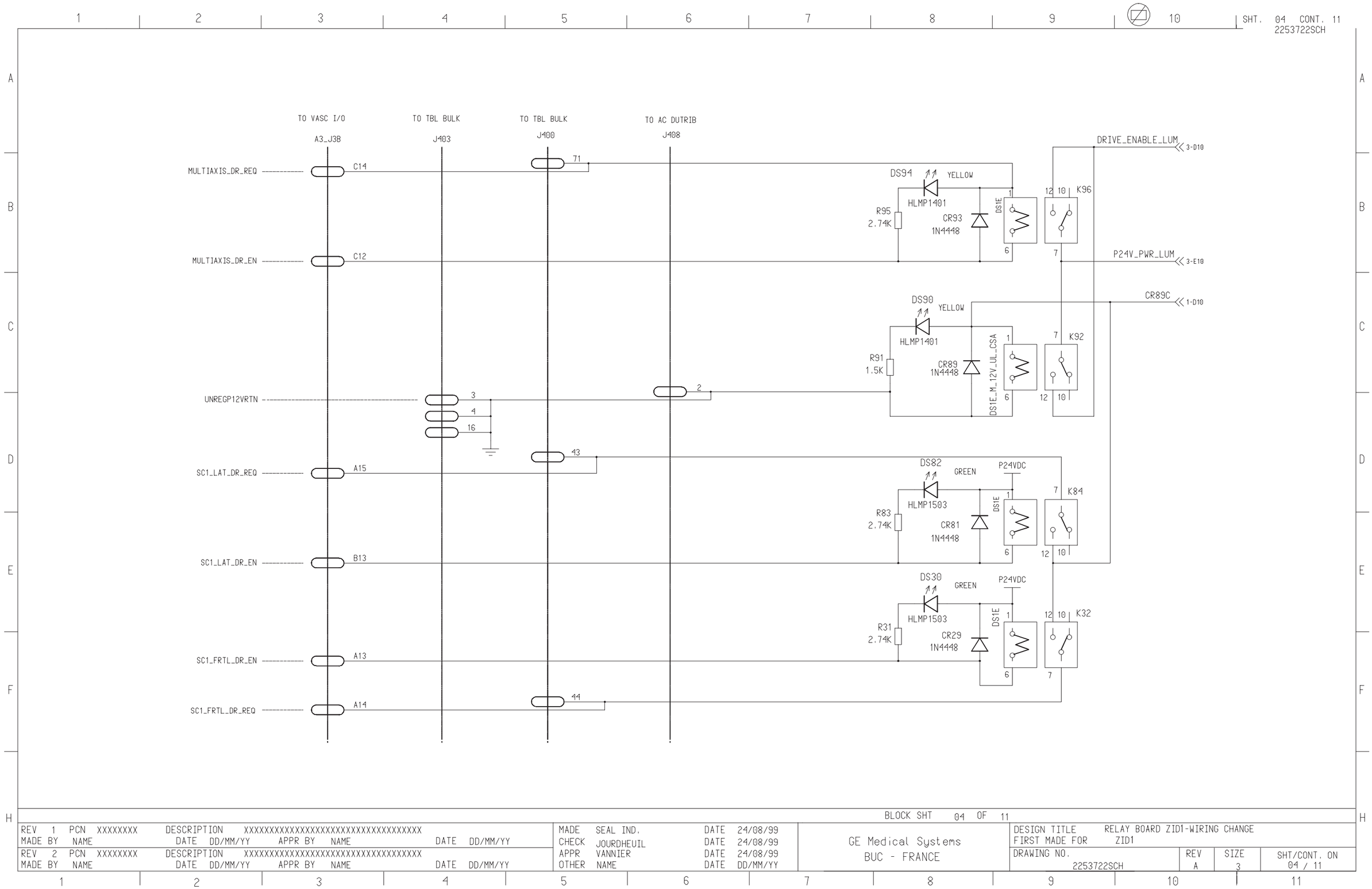

BLOCK SHT 04 OF 11

REV 1 PCN XXXXXXXX DESCRIPTION XXXXXXXXXXXXXXXXXXXXXXXXXXXXXXXXX MADE BY NAME DATE DD/MM/YY APPR BY NAME DATE DD/MM/YY REV 2 PCN XXXXXXXX DESCRIPTION XXXXXXXXXXXXXXXXXXXXXXXXXXXXXXXXX MADE BY NAME DATE DD/MM/YY APPR BY NAME DATE DD/MM/YY	MADE SEAL IND. DATE 24/08/99 CHECK JOURDHEUIL DATE 24/08/99 APPR VANNIER DATE 24/08/99 OTHER NAME DATE DD/MM/YY	GE Medical Systems BUC - FRANCE	DESIGN TITLE RELAY BOARD ZID1-WIRING CHANGE FIRST MADE FOR ZID1 DRAWING NO. 2253722SCH / REV A / SIZE 3 / SHT/CONT. ON 04 / 11

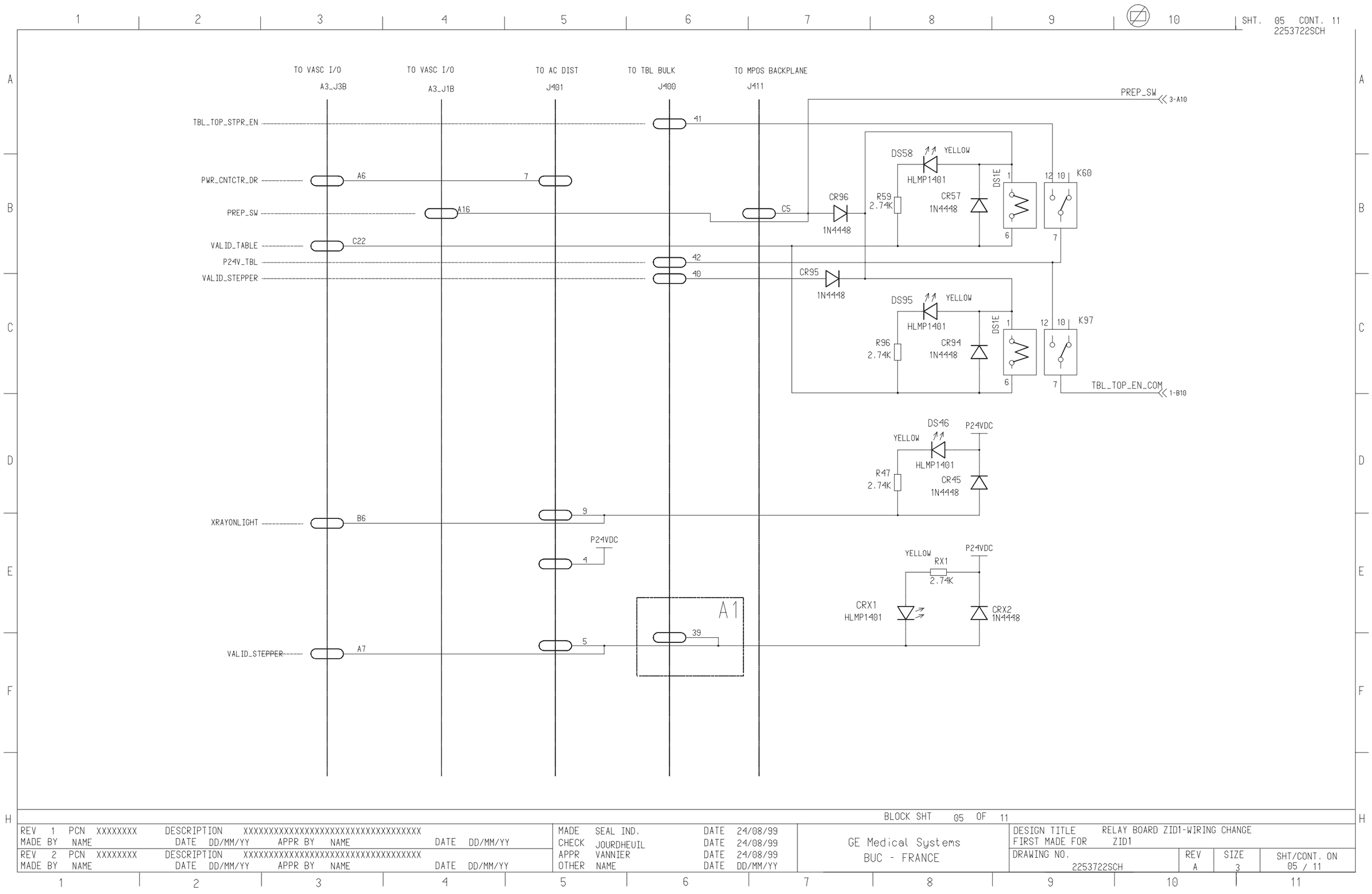

BLOCK SHT 05 OF 11											
REV 1 PCN XXXXXXXX DESCRIPTION XXXXXXXXXXXXXXXXXXXXXXXXXXXXXXXXXX MADE BY NAME DATE DD/MM/YY APPR BY NAME DATE DD/MM/YY				MADE SEAL IND. DATE 24/08/99 CHECK JOURDHEUIL DATE 24/08/99 APPR VANNIER DATE 24/08/99 OTHER NAME DATE DD/MM/YY	GE Medical Systems BUC - FRANCE	DESIGN TITLE RELAY BOARD ZID1-WIRING CHANGE FIRST MADE FOR ZID1			
REV 2 PCN XXXXXXXX DESCRIPTION XXXXXXXXXXXXXXXXXXXXXXXXXXXXXXXXXX MADE BY NAME DATE DD/MM/YY APPR BY NAME DATE DD/MM/YY						DRAWING NO. 2253722SCH	REV A	SIZE 3	SHT/CONT. ON 05 / 11

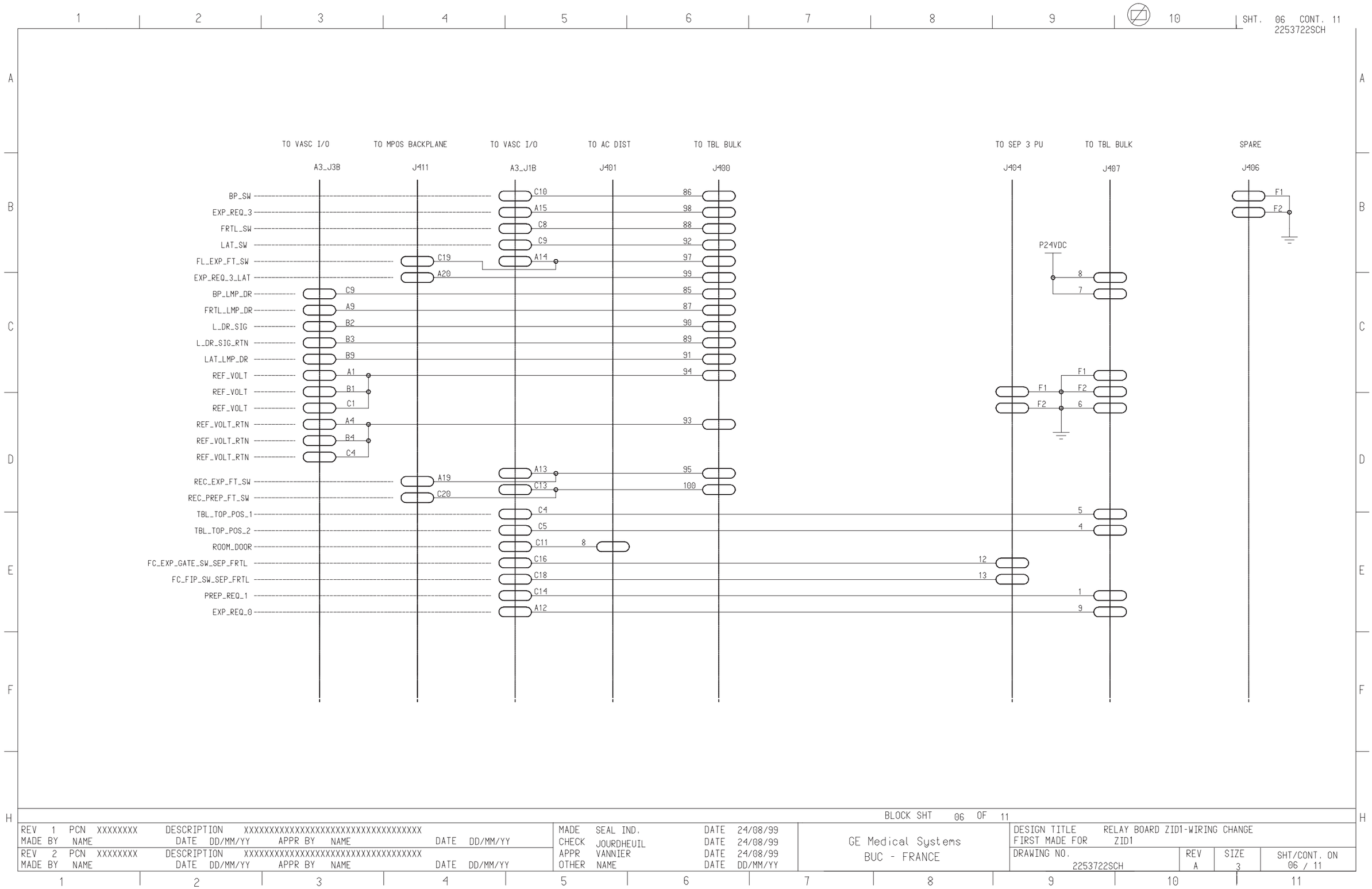
SHT. 06 CONT. 11
2253722SCH
TO VASC I/O
A3_J3B
TO MPOS BACKPLANE
J411
TO VASC I/O
A3_J1B
TO AC DIST
J401
TO TBL BULK
J400
TO SEP 3 PU
J404
TO TBL BULK
J407
SPARE
J406
BP_SW
EXP_REQ_3
FRTL_SW
LAT_SW
FL_EXP_FT_SW
EXP_REQ_3_LAT
BP_LMP_DR
FRTL_LMP_DR
L_DR_SIG
L_DR_SIG_RTN
LAT_LMP_DR
REF_VOLT
REF_VOLT
REF_VOLT
REF_VOLT_RTN
REF_VOLT_RTN
REF_VOLT_RTN
REC_EXP_FT_SW
REC_PREP_FT_SW
TBL_TOP_POS_1
TBL_TOP_POS_2
ROOM_DOOR
FC_EXP_GATE_SW_SEP_FRTL
FC_FIP_SW_SEP_FRTL
PREP_REQ_1
EXP_REQ_0
P24VDC
BLOCK SHT 06 OF 11
REV 1 PCN XXXXXXXX DESCRIPTION XXXXXXXXXXXXXXXXXXXXXXXXXXXXXXXXXX
MADE BY NAME DATE DD/MM/YY APPR BY NAME DATE DD/MM/YY
REV 2 PCN XXXXXXXX DESCRIPTION XXXXXXXXXXXXXXXXXXXXXXXXXXXXXXXXXX
MADE BY NAME DATE DD/MM/YY APPR BY NAME DATE DD/MM/YY
MADE SEAL IND. DATE 24/08/99
CHECK JOURDHEUIL DATE 24/08/99
APPR VANNIER DATE 24/08/99
OTHER NAME DATE DD/MM/YY
GE Medical Systems
BUC - FRANCE
DESIGN TITLE RELAY BOARD ZID1-WIRING CHANGE
FIRST MADE FOR ZID1
DRAWING NO. 2253722SCH
REV A
SIZE 3
SHT/CONT. ON 06 / 11

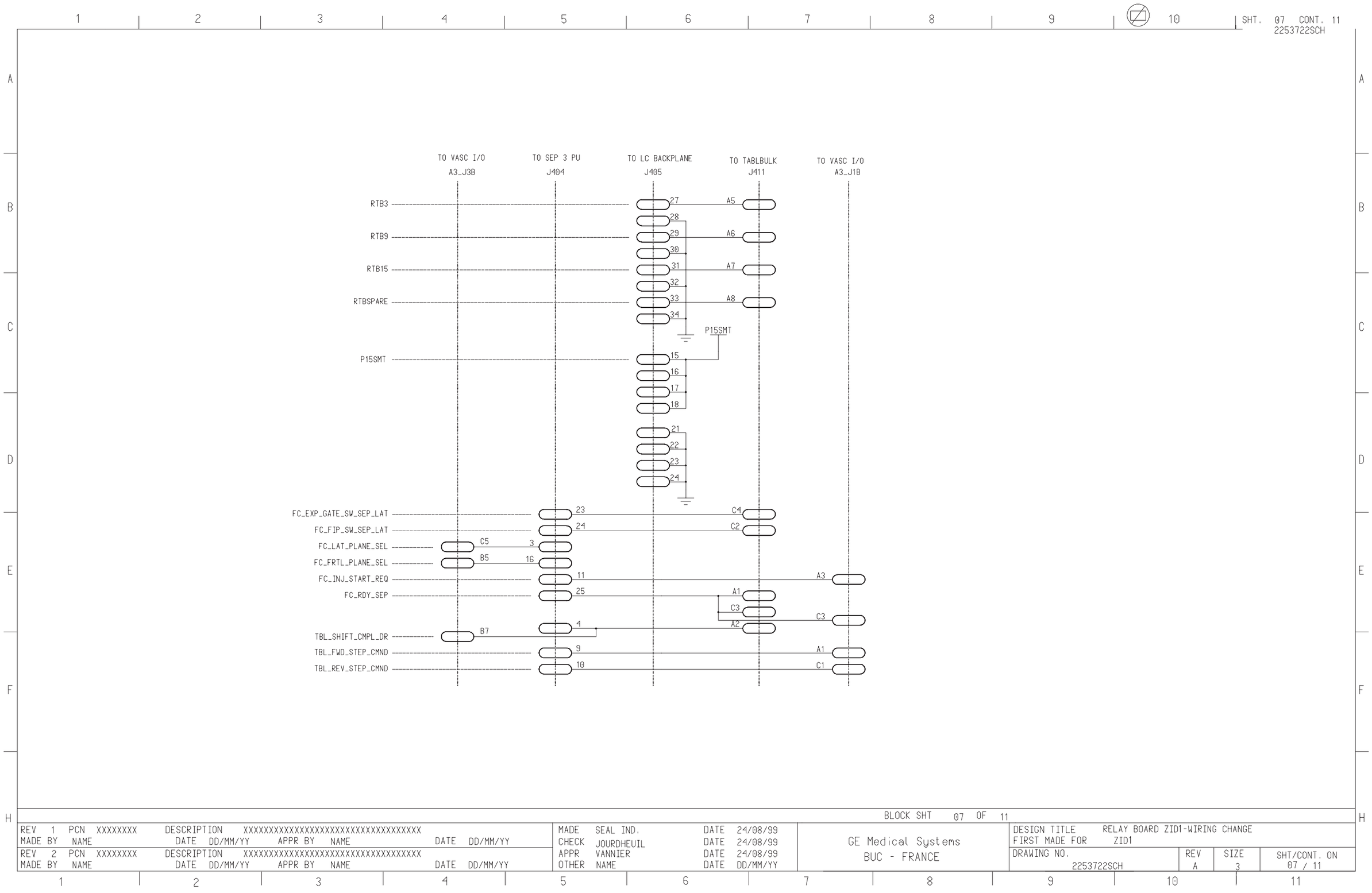
SHT. 07 CONT. 11
2253722SCH
TO VASC I/O A3_J3B
TO SEP 3 PU J404
TO LC BACKPLANE J405
TO TABLBULK J411
TO VASC I/O A3_J1B
RTB3
RTB9
RTB15
RTBSPARE
P15SMT
FC_EXP_GATE_SW_SEP_LAT
FC_FIP_SW_SEP_LAT
FC_LAT_PLANE_SEL
FC_FRTL_PLANE_SEL
FC_INJ_START_REQ
FC_RDY_SEP
TBL_SHIFT_CMPL_DR
TBL_FWD_STEP_CMND
TBL_REV_STEP_CMND
BLOCK SHT 07 OF 11
REV 1 PCN XXXXXXXX DESCRIPTION XXXXXXXXXXXXXXXXXXXXXXXXXXXXXXXXXX
MADE BY NAME DATE DD/MM/YY APPR BY NAME DATE DD/MM/YY
REV 2 PCN XXXXXXXX DESCRIPTION XXXXXXXXXXXXXXXXXXXXXXXXXXXXXXXXXX
MADE BY NAME DATE DD/MM/YY APPR BY NAME DATE DD/MM/YY
MADE SEAL IND. DATE 24/08/99
CHECK JOURDHEUIL DATE 24/08/99
APPR VANNIER DATE 24/08/99
OTHER NAME DATE DD/MM/YY
GE Medical Systems
BUC - FRANCE
DESIGN TITLE RELAY BOARD ZID1-WIRING CHANGE
FIRST MADE FOR ZID1
DRAWING NO. 2253722SCH
REV A
SIZE 3
SHT/CONT. ON 07 / 11

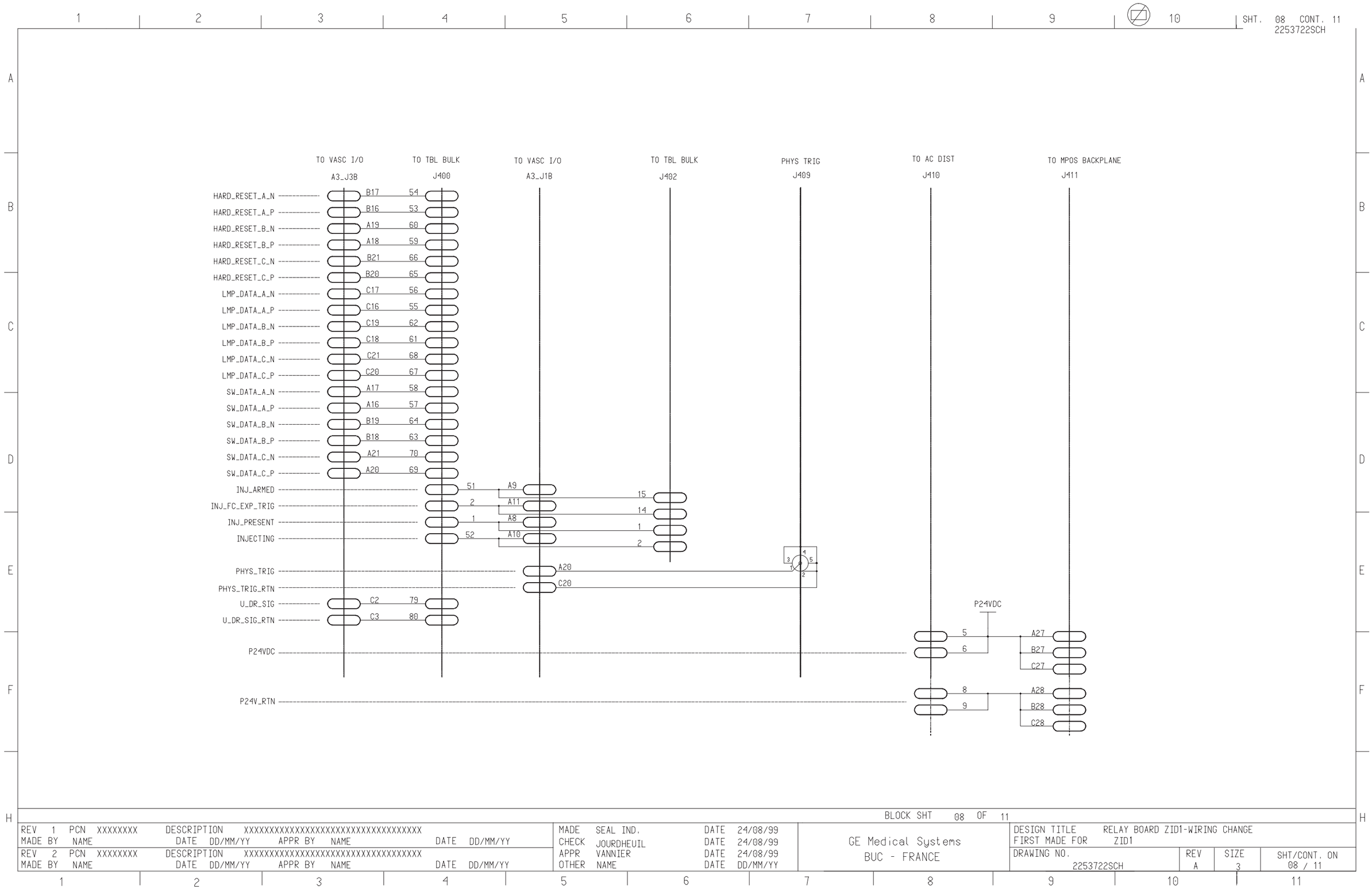
SHT. 08 CONT. 11
2253722SCH
TO VASC I/O
A3_J3B
TO TBL BULK
J400
TO VASC I/O
A3_J1B
TO TBL BULK
J402
PHYS TRIG
J409
TO AC DIST
J410
TO MPOS BACKPLANE
J411
HARD_RESET_A_N B17 54
HARD_RESET_A_P B16 53
HARD_RESET_B_N A19 60
HARD_RESET_B_P A18 59
HARD_RESET_C_N B21 66
HARD_RESET_C_P B20 65
LMP_DATA_A_N C17 56
LMP_DATA_A_P C16 55
LMP_DATA_B_N C19 62
LMP_DATA_B_P C18 61
LMP_DATA_C_N C21 68
LMP_DATA_C_P C20 67
SW_DATA_A_N A17 58
SW_DATA_A_P A16 57
SW_DATA_B_N B19 64
SW_DATA_B_P B18 63
SW_DATA_C_N A21 70
SW_DATA_C_P A20 69
INJ_ARMED 51 A9 15
INJ_FC_EXP_TRIG 2 A11 14
INJ_PRESENT 1 A8 1
INJECTING 52 A10 2
PHYS_TRIG A20
PHYS_TRIG_RTN C20
U_DR_SIG C2 79
U_DR_SIG_RTN C3 80
P24VDC
P24V_RTN
P24VDC
5 A27
6 B27
C27
8 A28
9 B28
C28
BLOCK SHT 08 OF 11
REV 1 PCN XXXXXXXX DESCRIPTION XXXXXXXXXXXXXXXXXXXXXXXXXXXXXXXXX
MADE BY NAME DATE DD/MM/YY APPR BY NAME DATE DD/MM/YY
REV 2 PCN XXXXXXXX DESCRIPTION XXXXXXXXXXXXXXXXXXXXXXXXXXXXXXXXX
MADE BY NAME DATE DD/MM/YY APPR BY NAME DATE DD/MM/YY
MADE SEAL IND. DATE 24/08/99
CHECK JOURDHEUIL DATE 24/08/99
APPR VANNIER DATE 24/08/99
OTHER NAME DATE DD/MM/YY
GE Medical Systems
BUC - FRANCE
DESIGN TITLE RELAY BOARD ZID1-WIRING CHANGE
FIRST MADE FOR ZID1
DRAWING NO. 2253722SCH
REV A
SIZE 3
SHT/CONT. ON 08 / 11

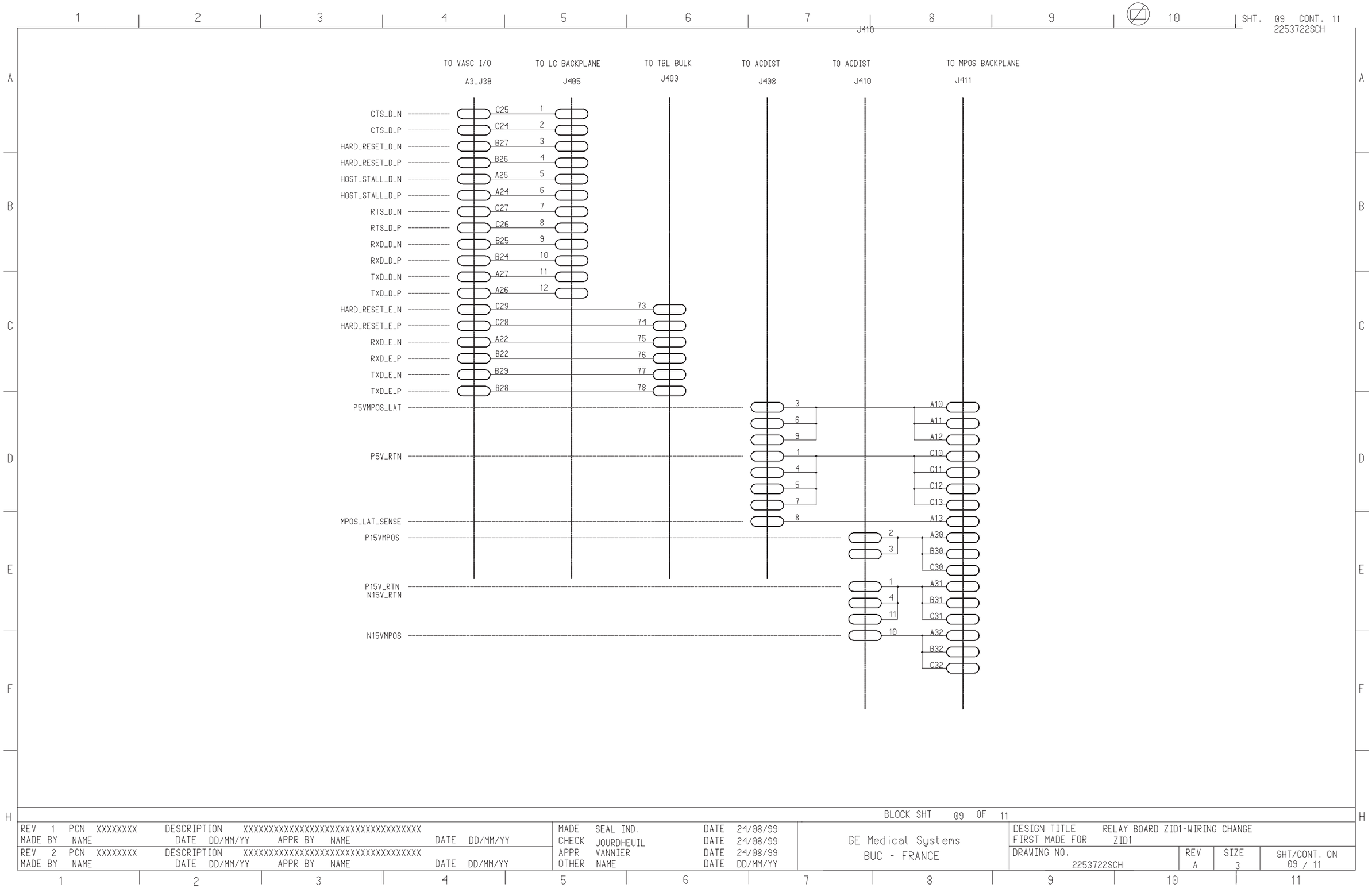

BLOCK SHT 09 OF 11

REV 1 PCN XXXXXXXX DESCRIPTION XXXXXXXXXXXXXXXXXXXXXXXXXXXXXXXXX MADE BY NAME DATE DD/MM/YY APPR BY NAME DATE DD/MM/YY REV 2 PCN XXXXXXXX DESCRIPTION XXXXXXXXXXXXXXXXXXXXXXXXXXXXXXXXX MADE BY NAME DATE DD/MM/YY APPR BY NAME DATE DD/MM/YY	MADE SEAL IND. DATE 24/08/99 CHECK JOURDHEUIL DATE 24/08/99 APPR VANNIER DATE 24/08/99 OTHER NAME DATE DD/MM/YY	GE Medical Systems BUC - FRANCE	DESIGN TITLE RELAY BOARD ZID1-WIRING CHANGE FIRST MADE FOR ZID1 DRAWING NO. 2253722SCH / REV A / SIZE 3 / SHT/CONT. ON 09 / 11

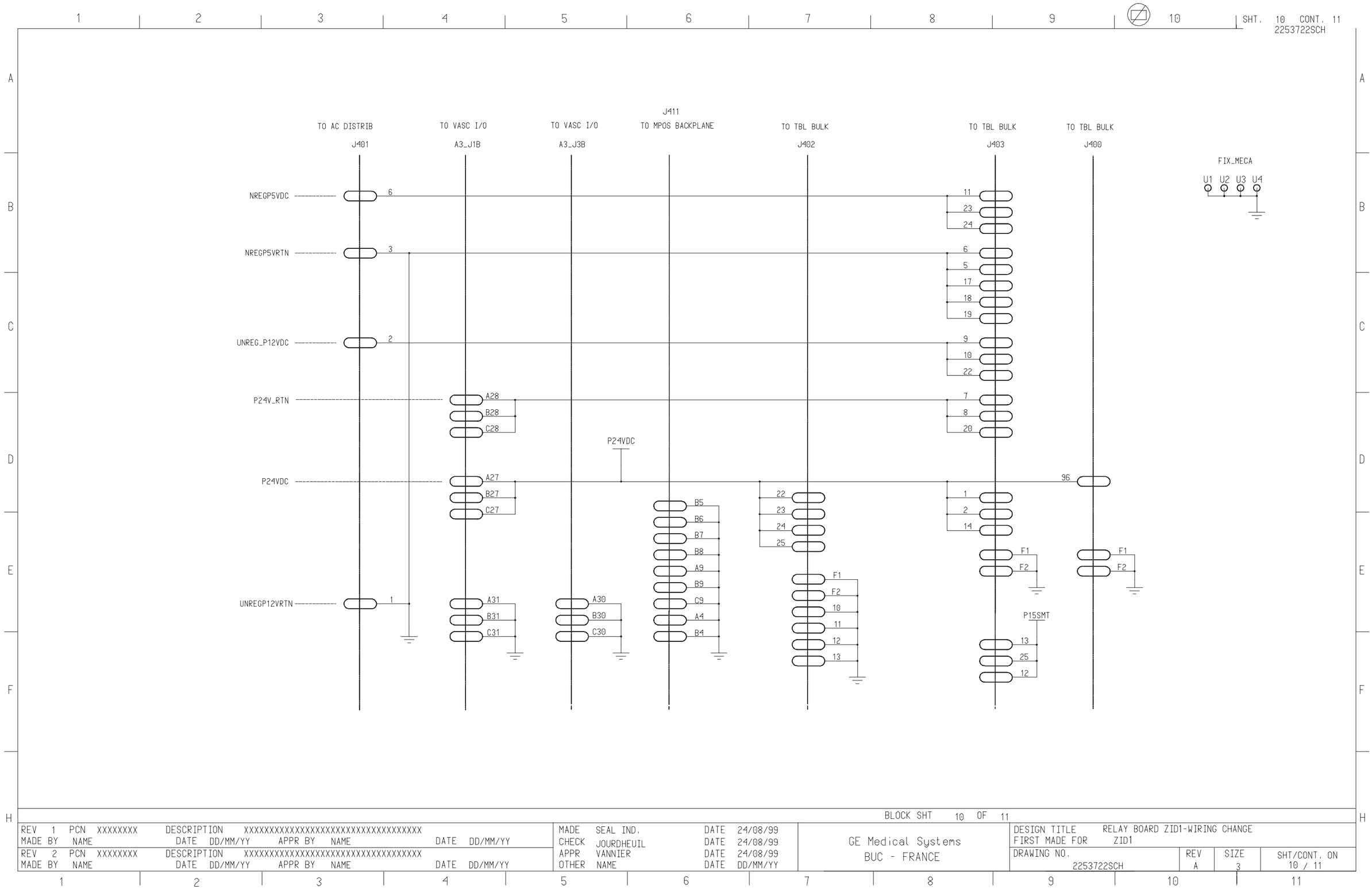

FRONTAL POSITIONER RACK

1 2 3 4 5 6 7 8 9 10 SHT. 11 CONT. 11
2253722SCH

A B C D E F H

MODIFICATION A:

MODIF. REF.	SHEET NO*	CROSS-REF.	MODIFICATION EXPLANATION	DDM OR DMAQ NO
A1	5	F6	ADD J400-39 CONNECTION	

REPERE MODIF.	NUMERO PAGE	LOCAL. TOPO.	DESCRIPTION DE LA MODIFICATION	NUM. DDM OU DMAQ
A1	5	F6	AJOUT CONNEXION SUR J400-39	

BLOCK SHT 11 OF 11

REV 1 PCN XXXXXXXX DESCRIPTION XXXXXXXXXXXXXXXXXXXXXXXXXXXXXXXXXX
MADE BY NAME DATE DD/MM/YY APPR BY NAME DATE DD/MM/YY
REV 2 PCN XXXXXXXX DESCRIPTION XXXXXXXXXXXXXXXXXXXXXXXXXXXXXXXXXX
MADE BY NAME DATE DD/MM/YY APPR BY NAME DATE DD/MM/YY

MADE SEAL IND. DATE 24/08/99
CHECK JOURDHEUIL DATE 24/08/99
APPR VANNIER DATE 24/08/99
OTHER NAME DATE DD/MM/YY

GE Medical Systems
BUC - FRANCE

DESIGN TITLE RELAY BOARD ZID1-WIRING CHANGE
FIRST MADE FOR ZID1
DRAWING NO. 2253722SCH | REV A | SIZE 3 | SHT/CONT. ON 11 / 11

1 2 3 4 5 6 7 8 9 10 11

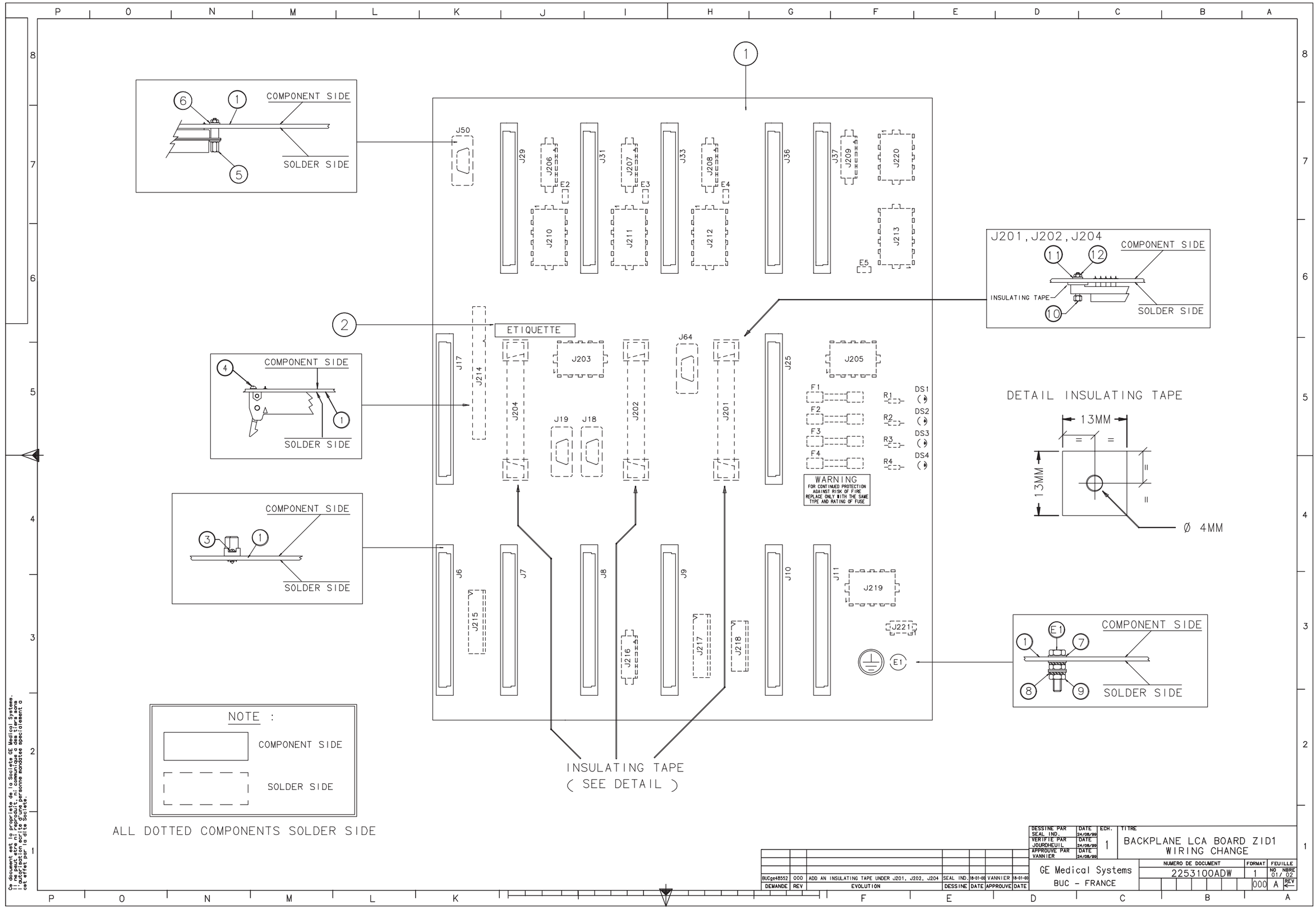

Ce document est la propriété de la Société GE Medical Systems.
Il ne peut être reproduit ni communiqué sans l'autorisation écrite d'une personne mandatée spécialement à cet effet par la dite Société.

DEMANDE	REV	EVOLUTION	DESSINE	DATE	APPROUVE	DATE
BUCge48552	000	ADD AN INSULATING TAPE UNDER J201, J202, J204	SEAL IND.	18-01-00	VANNIER	18-01-00

DESSINE PAR SEAL IND.	DATE 24/08/99	ECH. 1	TITRE: BACKPLANE LCA BOARD ZID1 WIRING CHANGE
VERIFIE PAR JOURDHEUIL	DATE 24/08/99		
APPROUVE PAR VANNIER	DATE 24/08/99		

GE Medical Systems
BUC – FRANCE

NUMERO DE DOCUMENT	FORMAT	FEUILLE
2253100ADW	1	NO 01/02
000 A	REV	

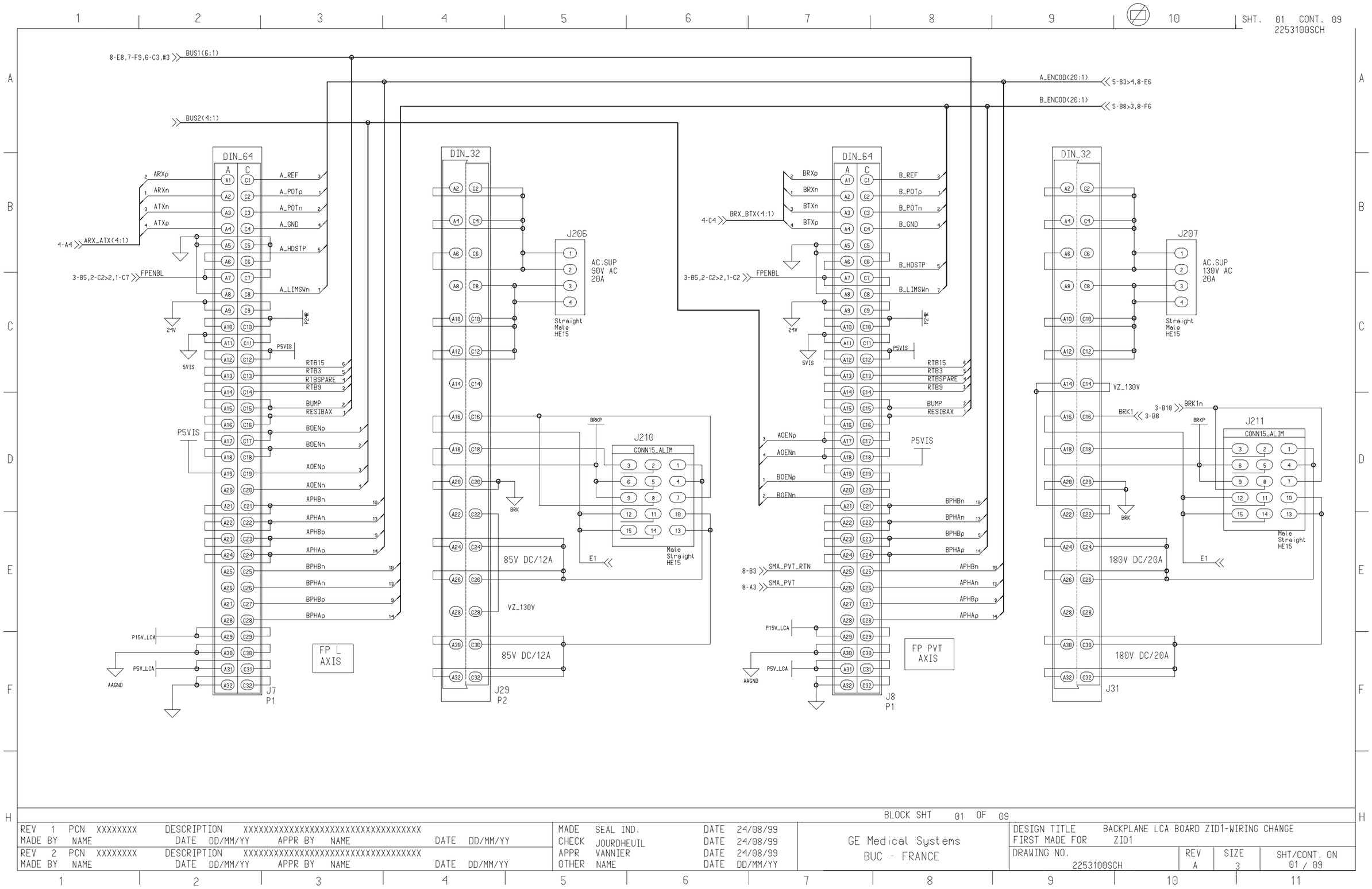

BLOCK SHT 01 OF 09

REV 1 PCN XXXXXXXX DESCRIPTION XXXXXXXXXXXXXXXXXXXXXXXXXXXXXXXXXX MADE BY NAME DATE DD/MM/YY APPR BY NAME DATE DD/MM/YY REV 2 PCN XXXXXXXX DESCRIPTION XXXXXXXXXXXXXXXXXXXXXXXXXXXXXXXXXX MADE BY NAME DATE DD/MM/YY APPR BY NAME DATE DD/MM/YY	MADE SEAL IND. DATE 24/08/99 CHECK JOURDHEUIL DATE 24/08/99 APPR VANNIER DATE 24/08/99 OTHER NAME DATE DD/MM/YY	GE Medical Systems BUC - FRANCE	DESIGN TITLE BACKPLANE LCA BOARD ZID1-WIRING CHANGE FIRST MADE FOR ZID1 DRAWING NO. 2253100SCH	REV A	SIZE 3	SHT/CONT. ON 01 / 09

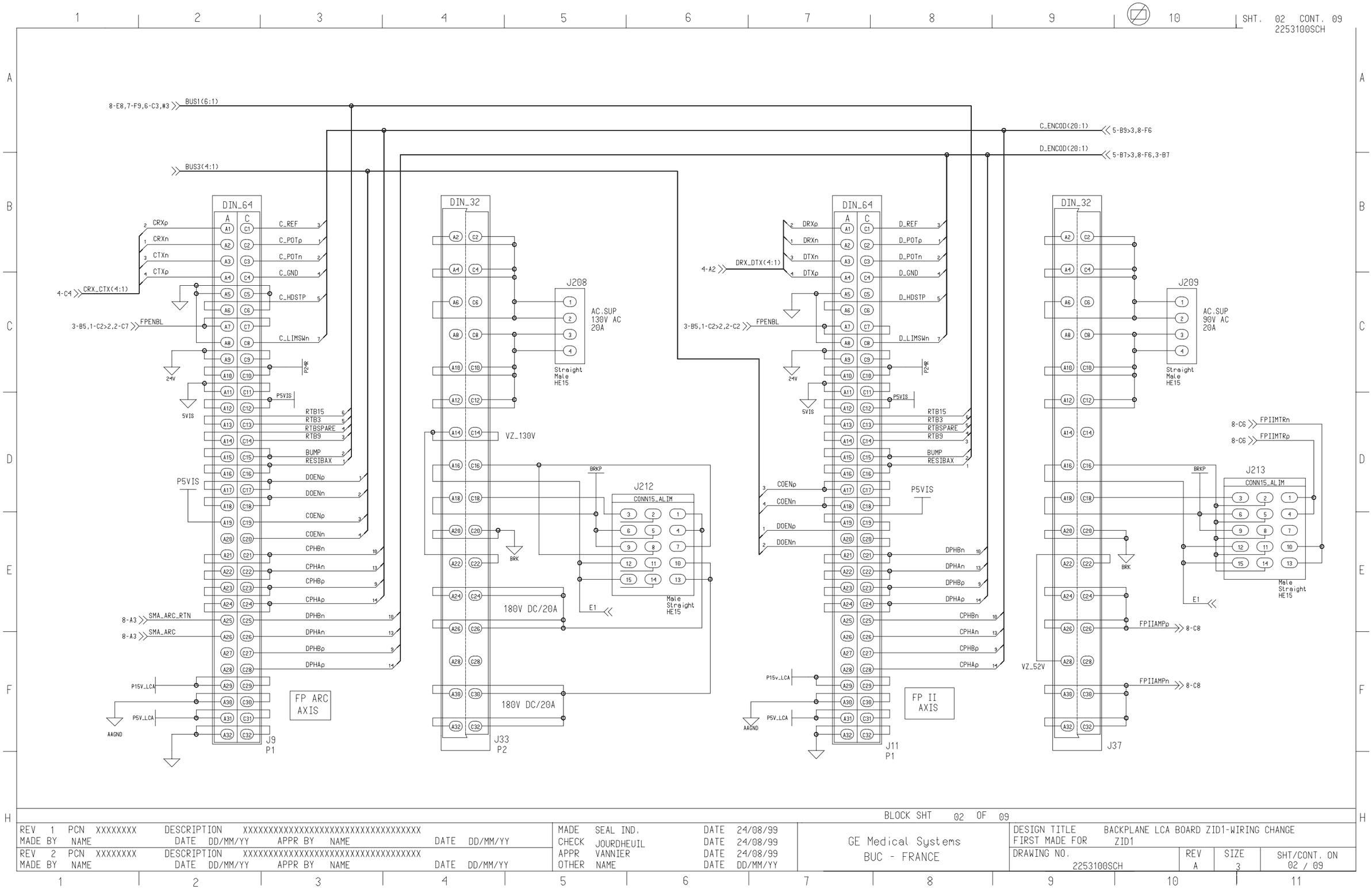

REV 1 PCN XXXXXXXX DESCRIPTION XXXXXXXXXXXXXXXXXXXXXXXXXXXXXXXXXX MADE BY NAME DATE DD/MM/YY APPR BY NAME DATE DD/MM/YY										
REV 2 PCN XXXXXXXX DESCRIPTION XXXXXXXXXXXXXXXXXXXXXXXXXXXXXXXXXX MADE BY NAME DATE DD/MM/YY APPR BY NAME DATE DD/MM/YY										
MADE SEAL IND. DATE 24/08/99 CHECK JOURDHEUIL DATE 24/08/99 APPR VANNIER DATE 24/08/99 OTHER NAME DATE DD/MM/YY										
BLOCK SHT 02 OF 09 GE Medical Systems BUC - FRANCE										
DESIGN TITLE BACKPLANE LCA BOARD ZID1-WIRING CHANGE FIRST MADE FOR ZID1 DRAWING NO. 2253100SCH REV A SIZE 3 SHT/CONT. ON 02 / 09										

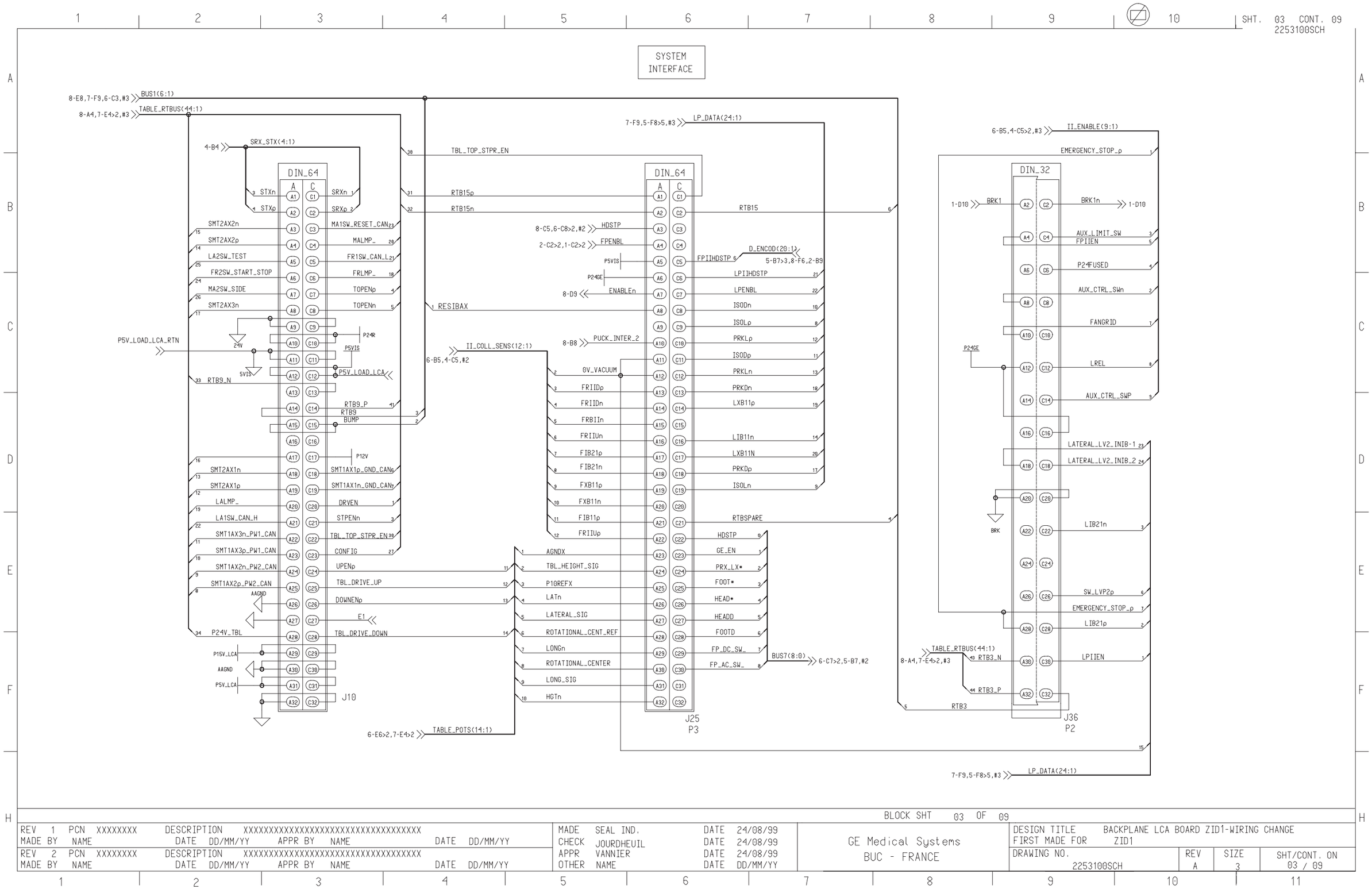

BLOCK SHT 03 OF 09											
REV 1 PCN XXXXXXXX DESCRIPTION XXXXXXXXXXXXXXXXXXXXXXXXXXXXXXXXXX MADE BY NAME DATE DD/MM/YY APPR BY NAME DATE DD/MM/YY				MADE SEAL IND. DATE 24/08/99 CHECK JOURDHEUIL DATE 24/08/99 APPR VANNIER DATE 24/08/99 OTHER NAME DATE DD/MM/YY	GE Medical Systems BUC - FRANCE	DESIGN TITLE BACKPLANE LCA BOARD ZID1-WIRING CHANGE FIRST MADE FOR ZID1			
REV 2 PCN XXXXXXXX DESCRIPTION XXXXXXXXXXXXXXXXXXXXXXXXXXXXXXXXXX MADE BY NAME DATE DD/MM/YY APPR BY NAME DATE DD/MM/YY						DRAWING NO. 2253100SCH	REV A	SIZE 3	SHT/CONT. ON 03 / 09

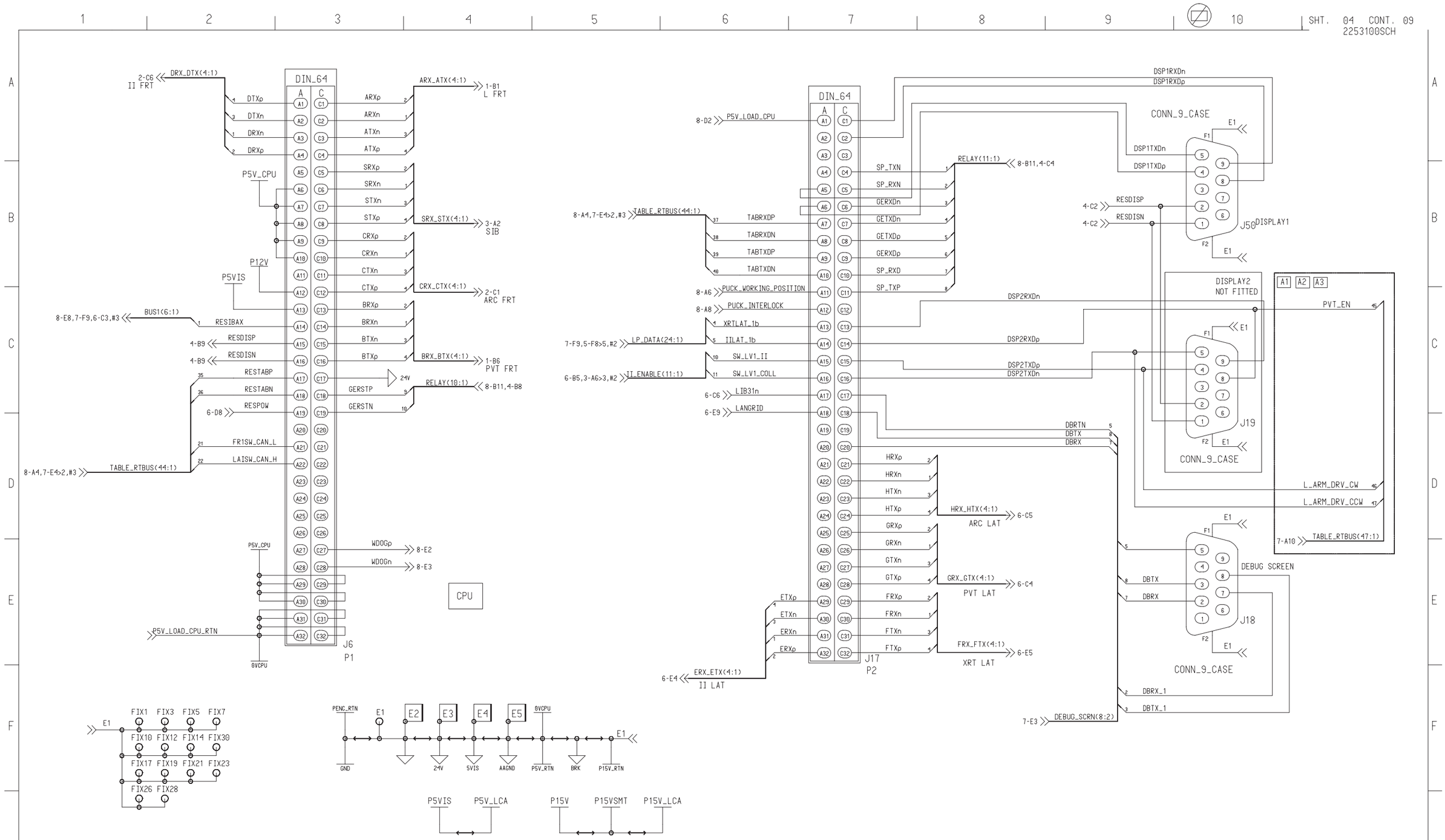

BLOCK SHT 04 OF 09

REV 1 PCN XXXXXXXX DESCRIPTION XXXXXXXXXXXXXXXXXXXXXXXXXXXXXXXXXX MADE BY NAME DATE DD/MM/YY APPR BY NAME DATE DD/MM/YY	MADE SEAL IND. DATE 24/08/99 CHECK JOURDHEUIL DATE 24/08/99 APPR VANNIER DATE 24/08/99 OTHER NAME DATE DD/MM/YY	GE Medical Systems BUC - FRANCE	DESIGN TITLE BACKPLANE LCA BOARD ZID1-WIRING CHANGE FIRST MADE FOR ZID1		
REV 2 PCN XXXXXXXX DESCRIPTION XXXXXXXXXXXXXXXXXXXXXXXXXXXXXXXXXX MADE BY NAME DATE DD/MM/YY APPR BY NAME DATE DD/MM/YY			DRAWING NO. 2253100SCH	REV A	SIZE 3 / SHT/CONT. ON 04 / 09

FRONTAL POSITIONER RACK

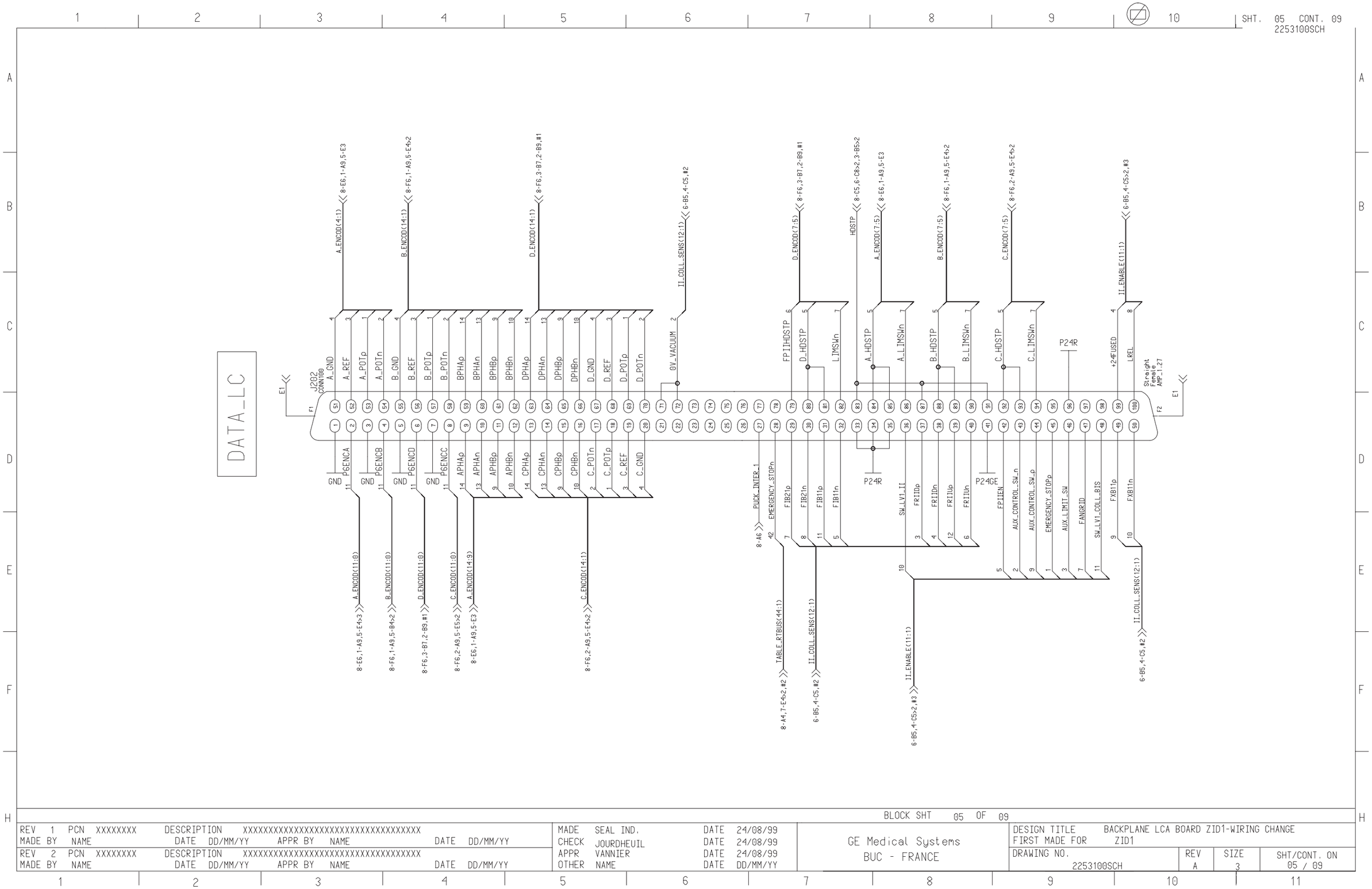
SHT. 05 CONT. 09
2253100SCH
DATA_LC
J202
CONN100
A_GND
A_REF
A_POTp
A_POTn
B_GND
B_REF
B_POTp
B_POTn
BPHAp
BPHAn
BPHBp
BPHBn
DPHAp
DPHAn
DPHBp
DPHBn
D_GND
D_REF
D_POTp
D_POTn
0V_VACUUM
FPITHDSTP
D_HDSTP
LIMSWn
HDSTP
A_HDSTP
A_LIMSWn
B_HDSTP
B_LIMSWn
C_HDSTP
C_LIMSWn
P24R
+24FUSED
LREL
Straight Female AMP_1.27
P24GE
FPIIEN
AUX_CONTROL_SW_n
AUX_CONTROL_SW_p
EMERGENCY_STOPp
AUX_LIMIT_SW
FANGRID
SW_LV1_COLL_BIS
FXB11p
FXB11n
PGENCA
PGENCB
PGENCD
PGENCC
APHAp
APHAn
APHBp
APHBn
CPHAp
CPHAn
CPHBp
CPHBn
C_POTn
C_POTp
C_REF
C_GND
PUCK_INTER_1
EMERGENCY_STOPn
FIB21p
FIB21n
FIB11p
FIB11n
SW_LV1_II
FRIIDp
FRIIDn
FRIIUp
FRIIUn
A_ENCOD(4:1)
B_ENCOD(4:1)
D_ENCOD(4:1)
IT_COLL_SENS(12:1)
D_ENCOD(7:5)
HDSTP
A_ENCOD(7:5)
B_ENCOD(7:5)
C_ENCOD(7:5)
II_ENABLE(11:1)
8-E6,1-A9,5-E3
8-F6,1-A9,5-E4>2
8-F6,3-B7,2-B9,#1
6-B5,4-C5,#2
8-C5,6-C8>2,3-B5>2
8-F6,2-A9,5-E4>2
6-B5,4-C5>2,#3
A_ENCOD(11:0)
B_ENCOD(11:0)
D_ENCOD(11:0)
C_ENCOD(11:0)
A_ENCOD(14:3)
C_ENCOD(14:1)
8-E6,1-A9,5-E4>3
8-F6,1-A9,5-B4>2
8-F6,3-B7,2-B9,#1
8-F6,2-A9,5-E5>2
8-E6,1-A9,5-E3
8-F6,2-A9,5-E4>2
TABLE_RTBUS(44:1)
II_COLL_SENS(12:1)
II_ENABLE(11:1)
8-A6
8-A4,7-E4>2,#2
6-B5,4-C5,#2
6-B5,4-C5>2,#3
BLOCK SHT 05 OF 09
REV 1 PCN XXXXXXXX DESCRIPTION XXXXXXXXXXXXXXXXXXXXXXXXXXXXXXXXXX
MADE BY NAME DATE DD/MM/YY APPR BY NAME DATE DD/MM/YY
REV 2 PCN XXXXXXXX DESCRIPTION XXXXXXXXXXXXXXXXXXXXXXXXXXXXXXXXXX
MADE BY NAME DATE DD/MM/YY APPR BY NAME DATE DD/MM/YY
MADE SEAL IND. DATE 24/08/99
CHECK JOURDHEUIL DATE 24/08/99
APPR VANNIER DATE 24/08/99
OTHER NAME DATE DD/MM/YY
GE Medical Systems
BUC - FRANCE
DESIGN TITLE BACKPLANE LCA BOARD ZID1-WIRING CHANGE
FIRST MADE FOR ZID1
DRAWING NO. 2253100SCH
REV A
SIZE 3
SHT/CONT. ON 05 / 09

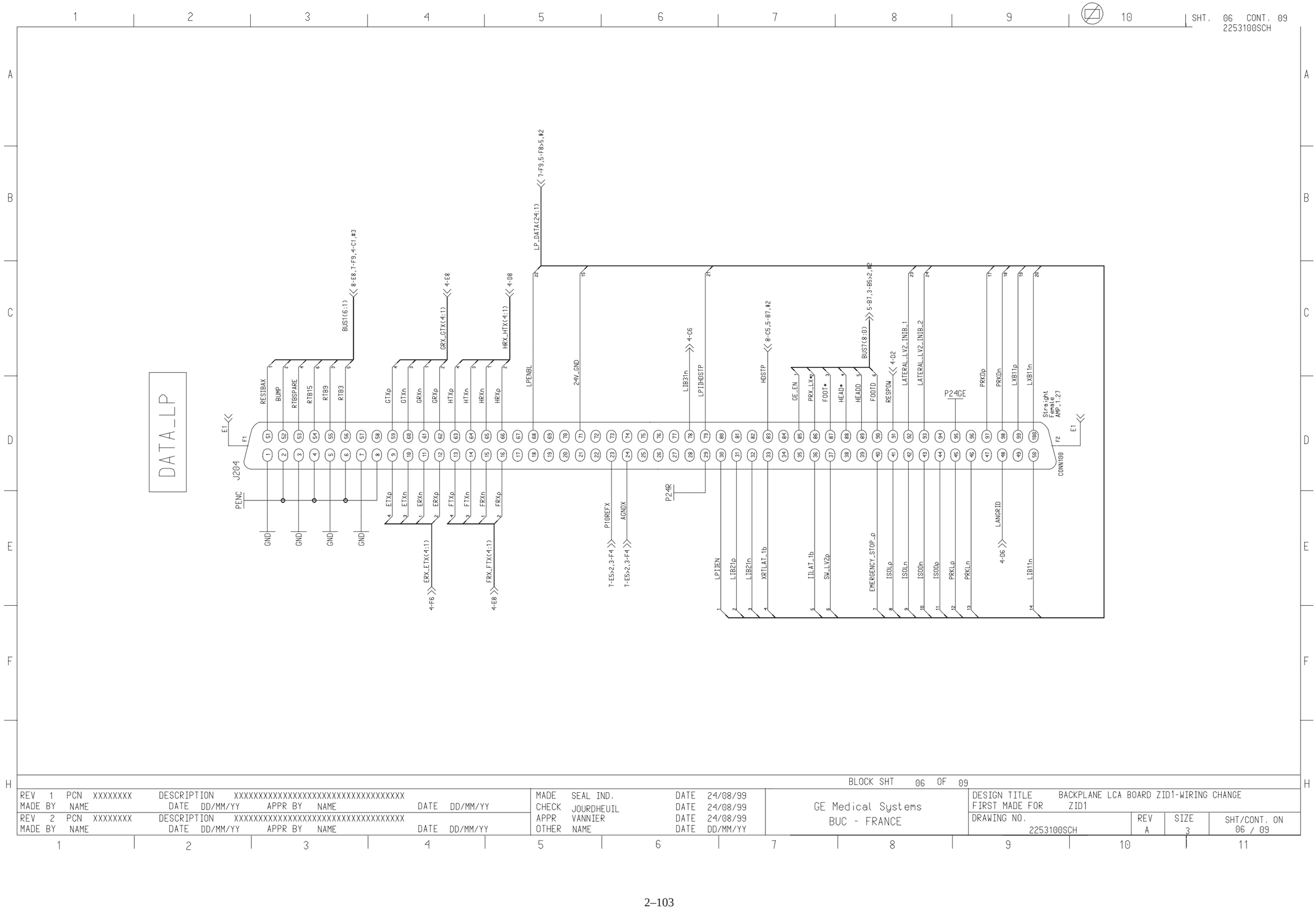

BLOCK SHT 06 OF 09

REV 1	PCN XXXXXXXX	DESCRIPTION XXXXXXXXXXXXXXXXXXXXXXXXXXXXXXXXXX		MADE	SEAL IND.	DATE 24/08/99	GE Medical Systems BUC - FRANCE	DESIGN TITLE	BACKPLANE LCA BOARD ZID1-WIRING CHANGE
MADE BY	NAME	DATE DD/MM/YY	APPR BY NAME DATE DD/MM/YY	CHECK	JOURDHEUIL	DATE 24/08/99		FIRST MADE FOR	ZID1
REV 2	PCN XXXXXXXX	DESCRIPTION XXXXXXXXXXXXXXXXXXXXXXXXXXXXXXXXXX		APPR	VANNIER	DATE 24/08/99		DRAWING NO. 2253100SCH	REV A / SIZE 3 / SHT/CONT. ON 06 / 09
MADE BY	NAME	DATE DD/MM/YY	APPR BY NAME DATE DD/MM/YY	OTHER	NAME	DATE DD/MM/YY			

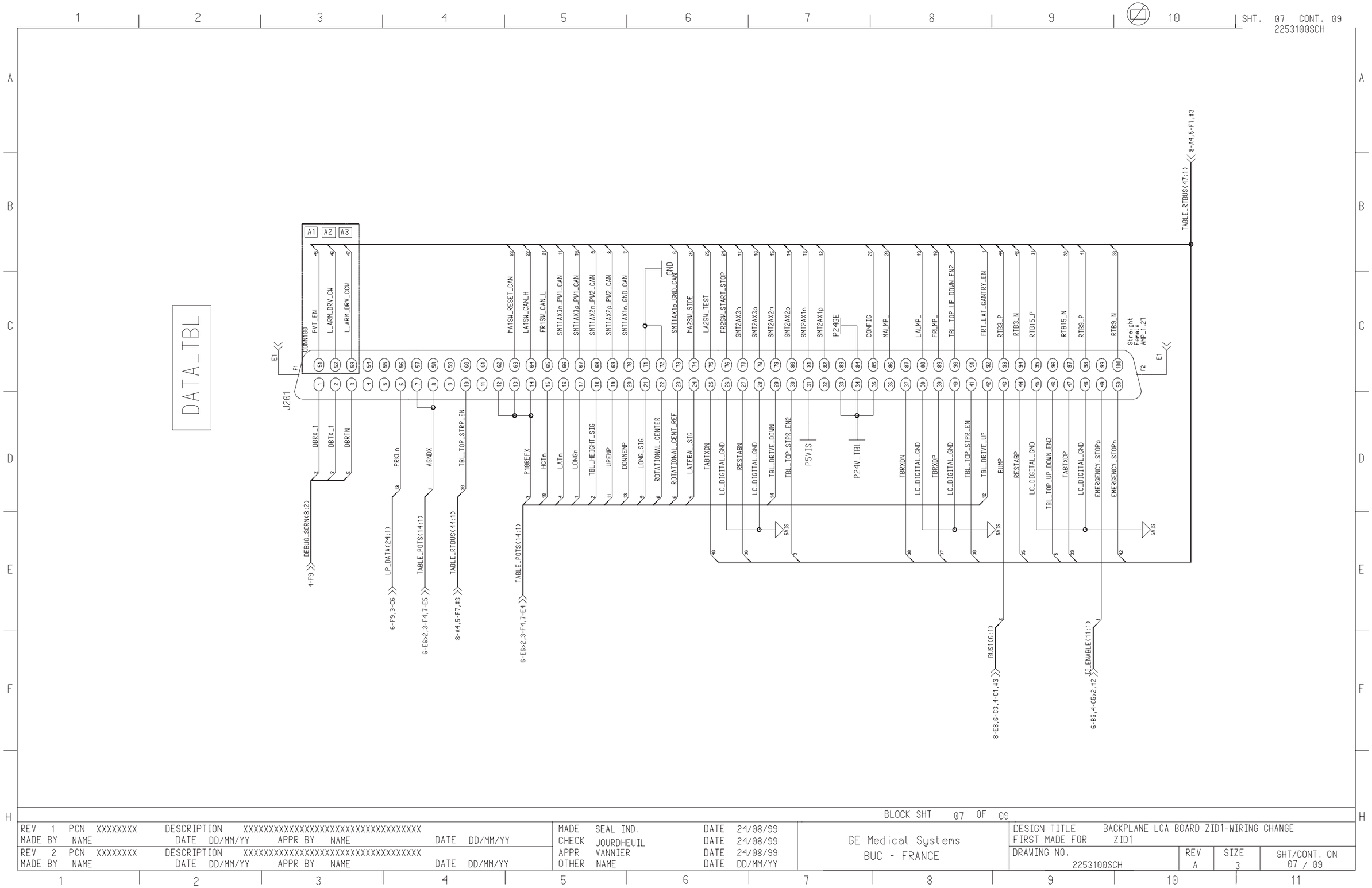

BLOCK SHT 07 OF 09

REV 1 PCN XXXXXXXX DESCRIPTION XXXXXXXXXXXXXXXXXXXXXXXXXXXXXXXXXX MADE BY NAME DATE DD/MM/YY APPR BY NAME DATE DD/MM/YY	MADE SEAL IND. DATE 24/08/99 CHECK JOURDHEUIL DATE 24/08/99 APPR VANNIER DATE 24/08/99 OTHER NAME DATE DD/MM/YY	GE Medical Systems BUC - FRANCE	DESIGN TITLE BACKPLANE LCA BOARD ZID1-WIRING CHANGE FIRST MADE FOR ZID1		
REV 2 PCN XXXXXXXX DESCRIPTION XXXXXXXXXXXXXXXXXXXXXXXXXXXXXXXXXX MADE BY NAME DATE DD/MM/YY APPR BY NAME DATE DD/MM/YY			DRAWING NO. 2253100SCH	REV A	SIZE 3 / SHT/CONT. ON 07 / 09

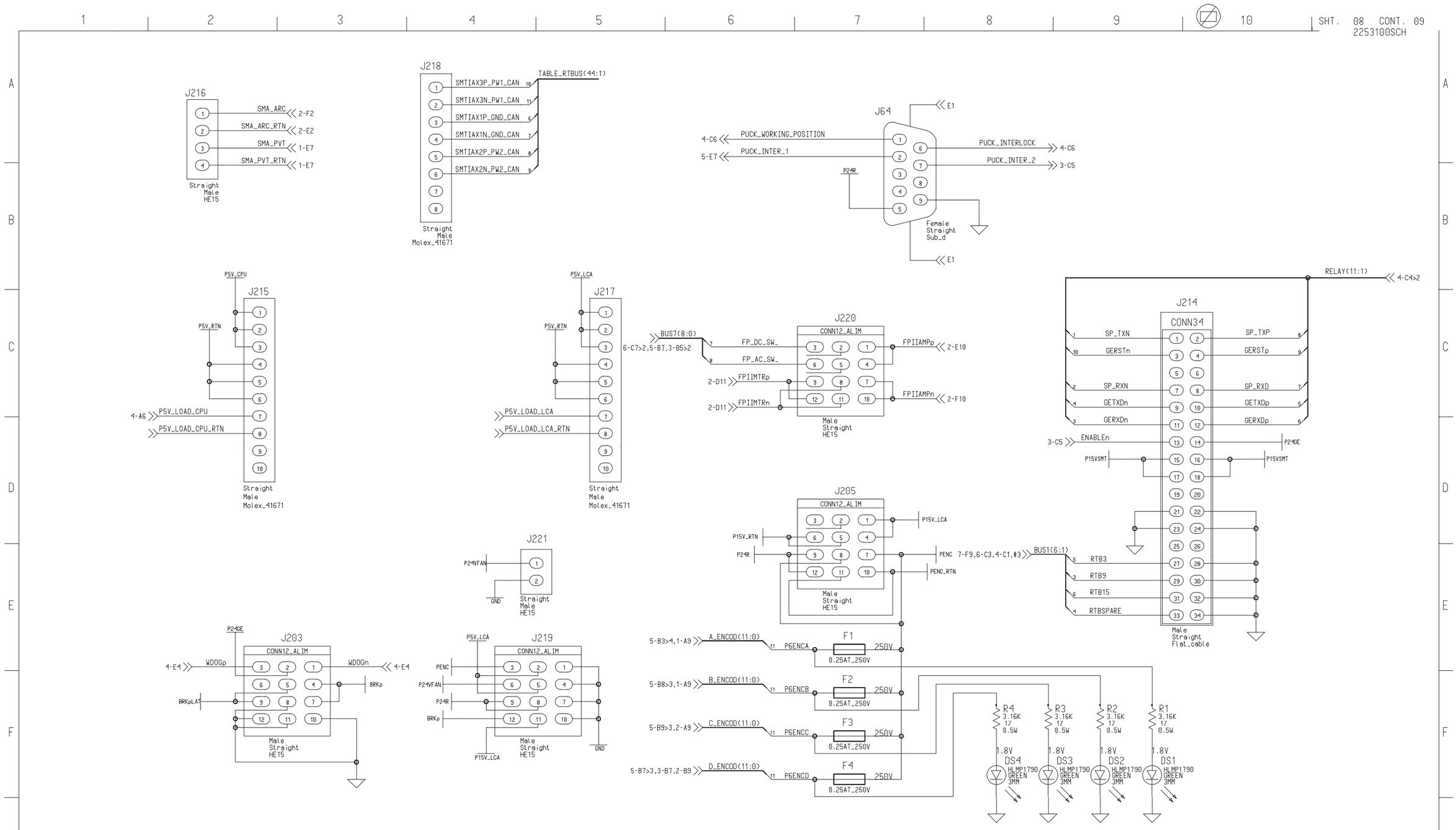

BLOCK SHT 08 OF 09

REV 1	PCN XXXXXXXX	DESCRIPTION XXXXXXXXXXXXXXXXXXXXXXXXXXXXXXXXXX					
MADE BY	NAME	DATE DD/MM/YY	APPR BY NAME	DATE DD/MM/YY			
REV 2	PCN XXXXXXXX	DESCRIPTION XXXXXXXXXXXXXXXXXXXXXXXXXXXXXXXXXX					
MADE BY	NAME	DATE DD/MM/YY	APPR BY NAME	DATE DD/MM/YY			

MADE	SEAL IND.	DATE	24/08/99
CHECK	JOURDHEUIL	DATE	24/08/99
APPR	VANNIER	DATE	24/08/99
OTHER	NAME	DATE	DD/MM/YY

GE Medical Systems
BUC - FRANCE

DESIGN TITLE BACKPLANE LCA BOARD ZID1-WIRING CHANGE
FIRST MADE FOR ZID1

DRAWING NO.	REV	SIZE	SHT/CONT. ON
2253100SCH	A	3	08 / 09

1 2 3 4 5 6 7 8 9 10

SHT. 09 CONT. 09
2253100SCH

A B C D E F H

MODIFICATION A:

MODIF. REF.	SHEET NO*	CROSS-REF.	MODIFICATION EXPLANATION	DDM OR DMAQ NO
A1	4 7	B4 B3	ADD J19-8 TO J201-51 CONNECTION	
A2	4 7	B4 B3	ADD J19-4 TO J201-52 CONNECTION	
A3	4 7	B4 B3	ADD J19-5 TO J201-53 CONNECTION	

REPERE MODIF.	NUMERO PAGE	LOCAL. TOPO.	DESCRIPTION DE LA MODIFICATION	NUM. DDM OU DMAQ
A1	4 7	B4 B3	AJOUT CONNEXION DE J19-8 A J201-51	
A2	4 7	B4 B3	AJOUT CONNEXION DE J19-4 A J201-52	
A3	4 7	B4 B3	AJOUT CONNEXION DE J19-5 A J201-53	

BLOCK SHT 09 OF 09

REV 1 PCN XXXXXXXX DESCRIPTION XXXXXXXXXXXXXXXXXXXXXXXXXXXXXXXXXX
MADE BY NAME DATE DD/MM/YY APPR BY NAME DATE DD/MM/YY

REV 2 PCN XXXXXXXX DESCRIPTION XXXXXXXXXXXXXXXXXXXXXXXXXXXXXXXXXX
MADE BY NAME DATE DD/MM/YY APPR BY NAME DATE DD/MM/YY

MADE SEAL IND. DATE 24/08/99
CHECK JOURDHEUIL DATE 24/08/99
APPR VANNIER DATE 24/08/99
OTHER NAME DATE DD/MM/YY

GE Medical Systems
BUC - FRANCE

DESIGN TITLE BACKPLANE LCA BOARD ZID1-WIRING CHANGE
FIRST MADE FOR ZID1
DRAWING NO. 2253100SCH | REV A | SIZE 3 | SHT/CONT. ON 09 / 09

1 2 3 4 5 6 7 8 9 10 11

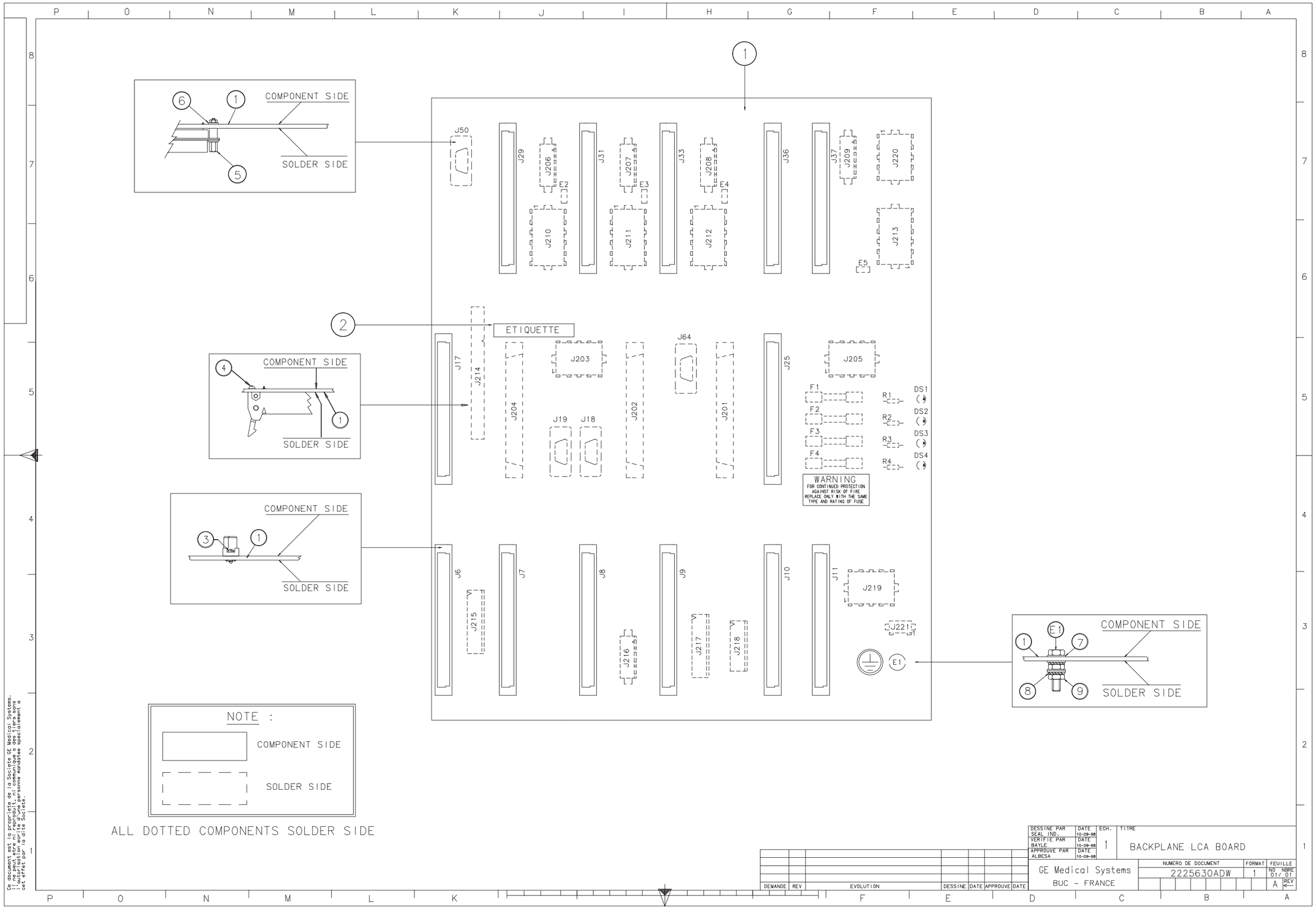

Ce document est la propriete de la Societe GE Medical Systems.
Il ne peut etre reproduit, communique ou detourne de son
objet sans l'autorisation ecrite d'une personne mandatee specialement a
cet effet par la dite Societe.

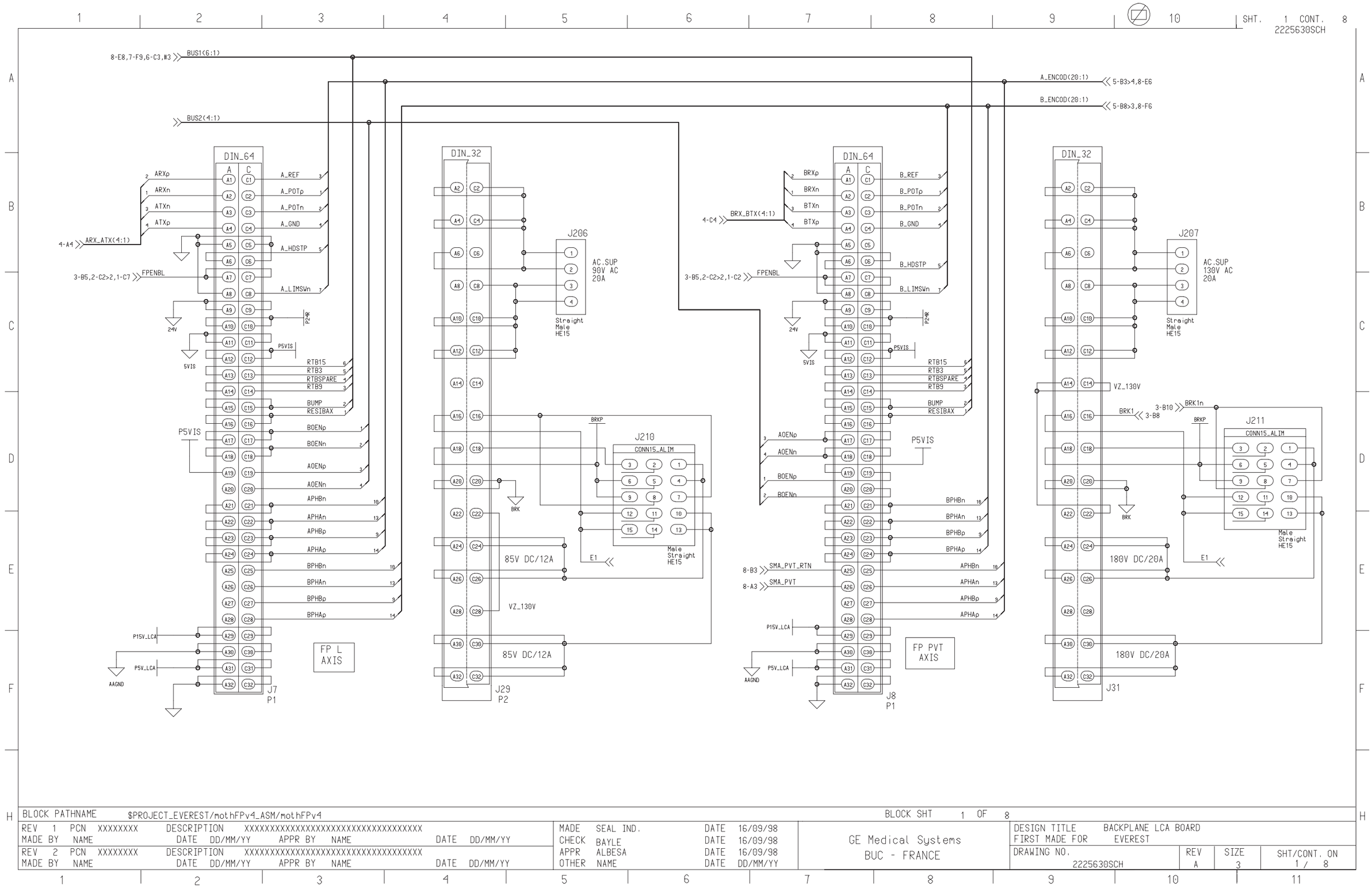

BLOCK PATHNAME $PROJECT_EVEREST/mothFPv4_ASM/mothFPv4								BLOCK SHT 1 OF 8			
REV 1 PCN XXXXXXXX DESCRIPTION XXXXXXXXXXXXXXXXXXXXXXXXXXXXXXXXXX MADE BY NAME DATE DD/MM/YY APPR BY NAME DATE DD/MM/YY				MADE SEAL IND.		DATE 16/09/98		GE Medical Systems BUC - FRANCE		DESIGN TITLE BACKPLANE LCA BOARD FIRST MADE FOR EVEREST	
REV 2 PCN XXXXXXXX DESCRIPTION XXXXXXXXXXXXXXXXXXXXXXXXXXXXXXXXXX MADE BY NAME DATE DD/MM/YY APPR BY NAME DATE DD/MM/YY				CHECK BAYLE		DATE 16/09/98				DRAWING NO. 2225630SCH	REV A / SIZE 3 / SHT/CONT. ON 1 / 8
				APPR ALBESA		DATE 16/09/98					
				OTHER NAME		DATE DD/MM/YY					

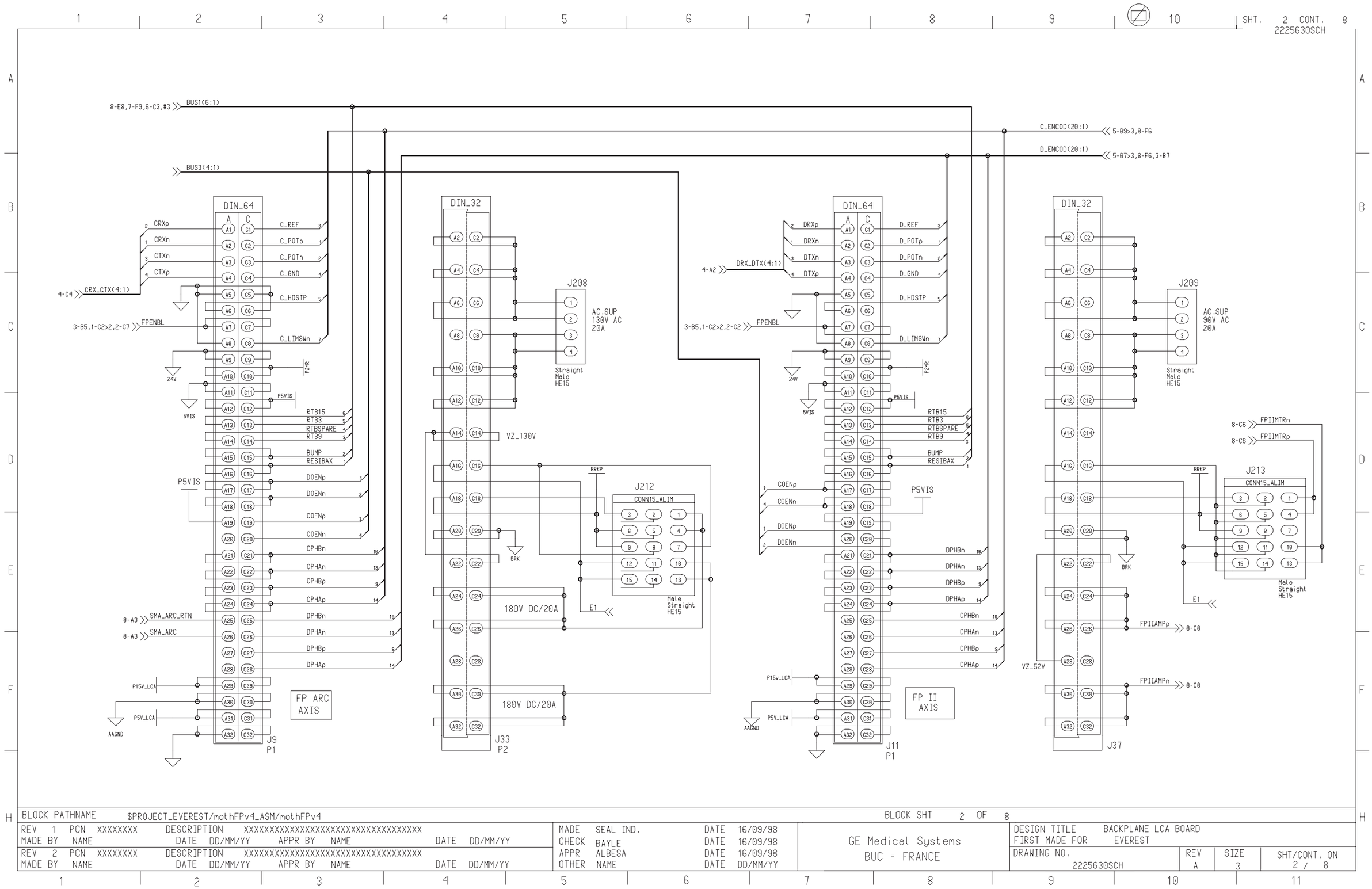

BLOCK PATHNAME $PROJECT_EVEREST/mothFPv4_ASM/mothFPv4								BLOCK SHT 2 OF 8			
REV 1 PCN XXXXXXXX DESCRIPTION XXXXXXXXXXXXXXXXXXXXXXXXXXXXXXXXXX MADE BY NAME DATE DD/MM/YY APPR BY NAME DATE DD/MM/YY				MADE SEAL IND.	DATE 16/09/98	GE Medical Systems BUC - FRANCE		DESIGN TITLE BACKPLANE LCA BOARD FIRST MADE FOR EVEREST			
REV 2 PCN XXXXXXXX DESCRIPTION XXXXXXXXXXXXXXXXXXXXXXXXXXXXXXXXXX MADE BY NAME DATE DD/MM/YY APPR BY NAME DATE DD/MM/YY				CHECK BAYLE	DATE 16/09/98			DRAWING NO. 2225630SCH	REV A	SIZE 3	SHT/CONT. ON 2 / 8
				APPR ALBESA	DATE 16/09/98						
				OTHER NAME	DATE DD/MM/YY						

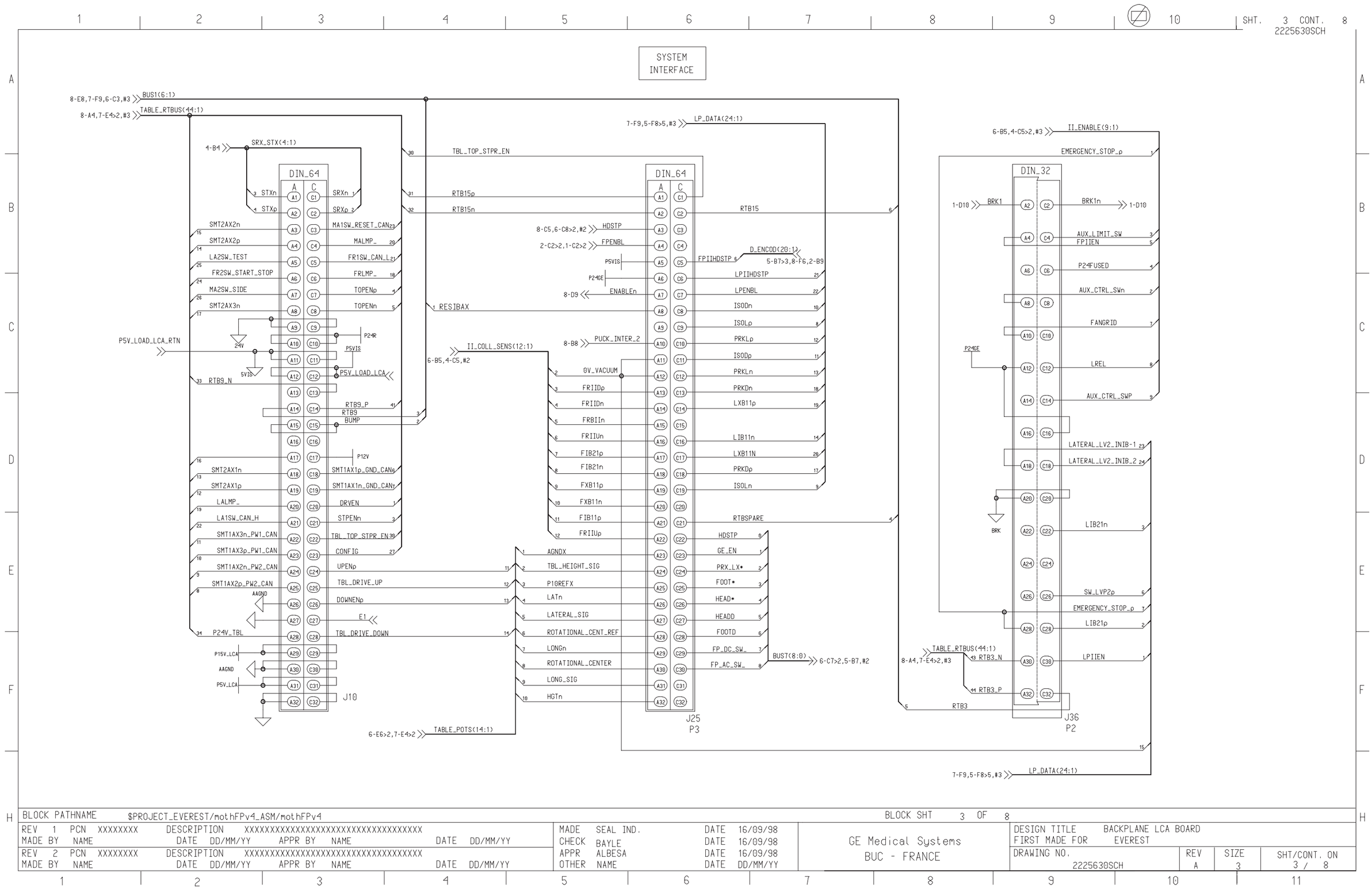
SHT. 3 CONT. 8
2225630SCH
SYSTEM INTERFACE
8-E8,7-F9,6-C3,#3 BUS1(6:1)
8-A4,7-E4>2,#3 TABLE_RTBUS(44:1)
4-B4 SRX_STX(4:1)
DIN_64
J10
J25
P3
J36
P2
DIN_32
SMT2AX2n
SMT2AX2p
LA2SW_TEST
FR2SW_START_STOP
MA2SW_SIDE
SMT2AX3n
P5V_LOAD_LCA_RTN
RTB9_N
SMT2AX1n
SMT2AX1p
LALMP_
LA1SW_CAN_H
SMT1AX3n_PW1_CAN
SMT1AX3p_PW1_CAN
SMT1AX2n_PW2_CAN
SMT1AX2p_PW2_CAN
P24V_TBL
P15V_LCA
P5V_LCA
MA1SW_RESET_CAN
MALMP_
FR1SW_CAN_L
FRLMP_
TOPENp
TOPENn
RTB9_P
BUMP
SMT1AX1p_GND_CAN
SMT1AX1n_GND_CAN
DRVEN
STPENn
TBL_TOP_STPR_EN
CONFIG
UPENp
TBL_DRIVE_UP
DOWNENp
TBL_DRIVE_DOWN
TBL_TOP_STPR_EN
RTB15p
RTB15n
RESIBAX
7-F9,5-F8>5,#3 LP_DATA(24:1)
8-C5,6-C8>2,#2 HDSTP
2-C2>2,1-C2>2 FPENBL
P5VIS
P24DE
8-D9 ENABLEn
II_COLL_SENS(12:1)
6-B5,4-C5,#2
8-B8 PUCK_INTER_2
0V_VACUUM
FRIIDp
FRIIDn
FRBIIn
FRIIUn
FIB21p
FIB21n
FXB11p
FXB11n
FIB11p
FRIIUp
6-E6>2,7-E4>2 TABLE_POTS(14:1)
AGNDX
TBL_HEIGHT_SIG
P10REFX
LATn
LATERAL_SIG
ROTATIONAL_CENT_REF
LONGn
ROTATIONAL_CENTER
LONG_SIG
HGTn
RTBSPARE
HDSTP
GE_EN
PRX_LX*
FOOT*
HEAD*
HEADD
FOOTD
FP_DC_SW_
FP_AC_SW_
BUS7(8:0)
6-C7>2,5-B7,#2
D_ENCOD(20:1)
5-B7>3,8-F6,2-B9
FPIIHDSTP
LPIIHDSTP
LPENBL
ISODn
ISOLp
PRKLp
ISODp
PRKLn
PRKDn
LXB11p
LIB11n
LXB11N
PRKDp
ISOLn
6-B5,4-C5>2,#3 II_ENABLE(9:1)
EMERGENCY_STOP_p
1-D10 BRK1
BRK1n
AUX_LIMIT_SW
FPIIEN
P24FUSED
AUX_CTRL_SWn
FANGRID
LREL
AUX_CTRL_SWP
LATERAL_LV2_INIB-1
LATERAL_LV2_INIB_2
LIB21n
SW_LVP2p
EMERGENCY_STOP_p
LIB21p
LPIIEN
RTB3_N
RTB3_P
RTB3
7-F9,5-F8>5,#3 LP_DATA(24:1)
BLOCK PATHNAME $PROJECT_EVEREST/mothFPv4_ASM/mothFPv4
BLOCK SHT 3 OF 8
REV 1 PCN XXXXXXXX DESCRIPTION XXXXXXXXXXXXXXXXXXXXXXXXXXXXXXXXXX
MADE BY NAME DATE DD/MM/YY APPR BY NAME DATE DD/MM/YY
REV 2 PCN XXXXXXXX DESCRIPTION XXXXXXXXXXXXXXXXXXXXXXXXXXXXXXXXXX
MADE BY NAME DATE DD/MM/YY APPR BY NAME DATE DD/MM/YY
MADE SEAL IND. DATE 16/09/98
CHECK BAYLE DATE 16/09/98
APPR ALBESA DATE 16/09/98
OTHER NAME DATE DD/MM/YY
GE Medical Systems
BUC - FRANCE
DESIGN TITLE BACKPLANE LCA BOARD
FIRST MADE FOR EVEREST
DRAWING NO. 2225630SCH
REV A
SIZE 3
SHT/CONT. ON 3 / 8

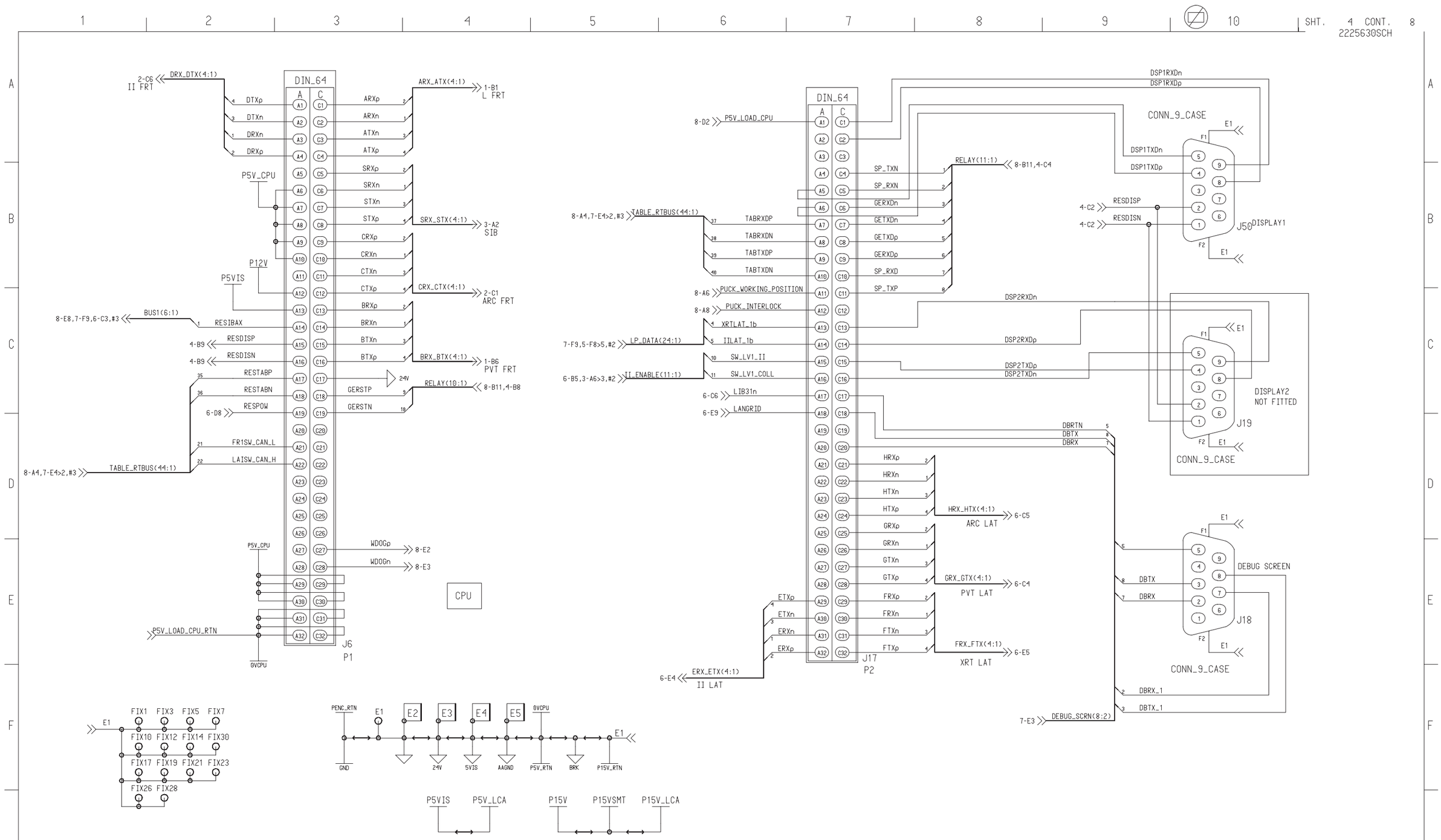

BLOCK PATHNAME $PROJECT_EVEREST/mothFPv4_ASM/mothFPv4							BLOCK SHT 4 OF 8				
REV 1 PCN XXXXXXXX DESCRIPTION XXXXXXXXXXXXXXXXXXXXXXXXXXXXXXXXXX MADE BY NAME DATE DD/MM/YY APPR BY NAME DATE DD/MM/YY				MADE SEAL IND. DATE 16/09/98 CHECK BAYLE DATE 16/09/98 APPR ALBESA DATE 16/09/98 OTHER NAME DATE DD/MM/YY		GE Medical Systems BUC - FRANCE		DESIGN TITLE BACKPLANE LCA BOARD FIRST MADE FOR EVEREST			
REV 2 PCN XXXXXXXX DESCRIPTION XXXXXXXXXXXXXXXXXXXXXXXXXXXXXXXXXX MADE BY NAME DATE DD/MM/YY APPR BY NAME DATE DD/MM/YY								DRAWING NO. 2225630SCH	REV A	SIZE 3	SHT/CONT. ON 4 / 8

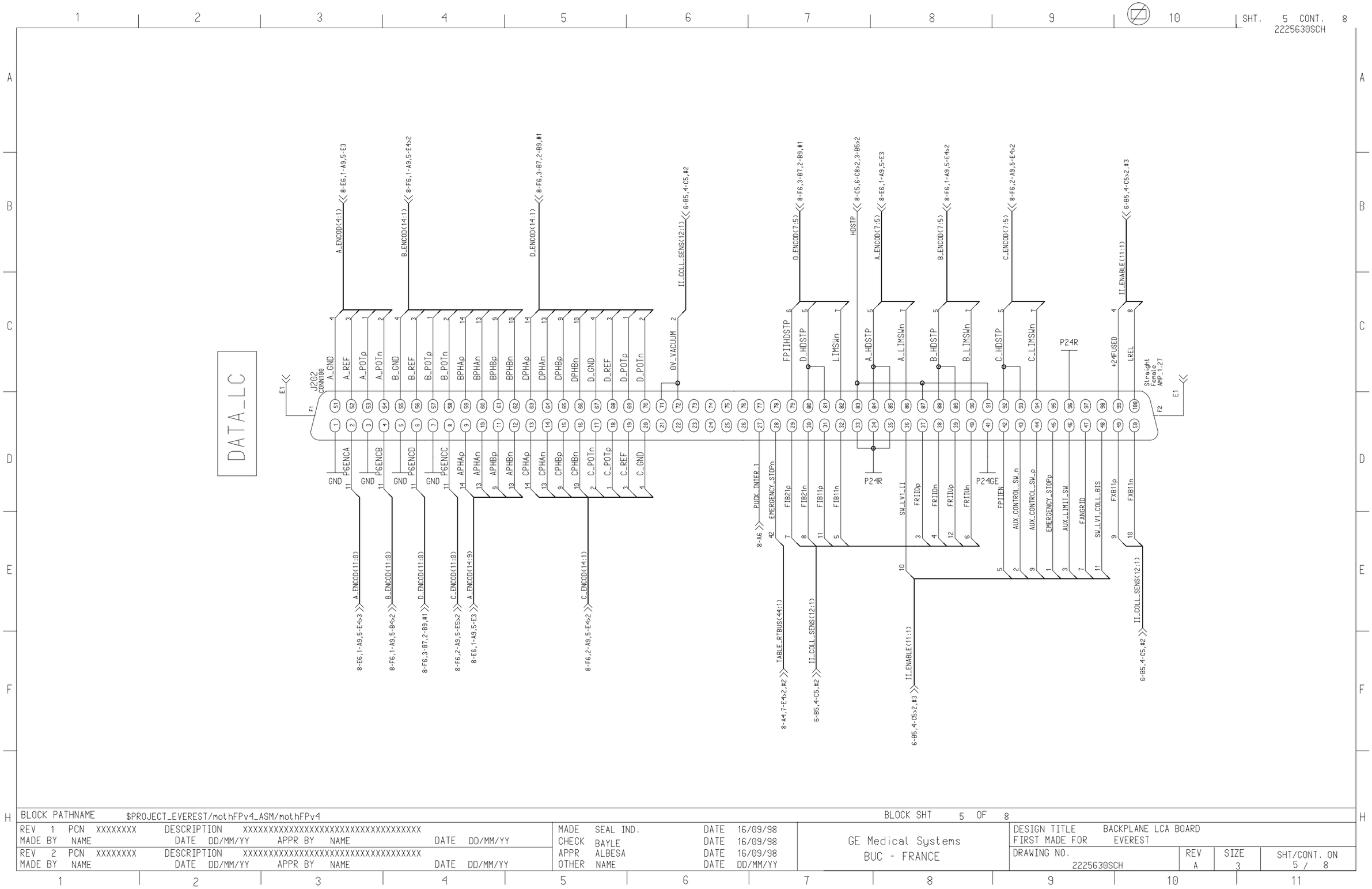
SHT. 5 CONT. 8
2225630SCH
DATA_LC
J202
CONN100
A_GND
A_REF
A_POTp
A_POTn
B_GND
B_REF
B_POTp
B_POTn
BPHAp
BPHAn
BPHBp
BPHBn
DPHAp
DPHAn
DPHBp
DPHBn
D_GND
D_REF
D_POTp
D_POTn
0V_VACUUM
FPIIHDSTP
D_HDSTP
LIMSWn
HDSTP
A_HDSTP
A_LIMSWn
B_HDSTP
B_LIMSWn
C_HDSTP
C_LIMSWn
P24R
+24FUSED
LREL
Straight Female 6 AMP_1.27
PGENCA
PGENCB
PGENCD
PGENCC
APHAp
APHAn
APHBp
APHBn
CPHAp
CPHAn
CPHBp
CPHBn
C_POTn
C_POTp
C_REF
C_GND
P24GE
PUCK_INTER_1
EMERGENCY_STOPn
FIB21p
FIB21n
FIB11p
FIB11n
SW_LV1_II
FRIIDp
FRIIDn
FRIIUp
FRIIUn
FPIIEN
AUX_CONTROL_SW_n
AUX_CONTROL_SW_p
EMERGENCY_STOPp
AUX_LIMIT_SW
FANGRID
SW_LV1_COLL_BIS
FXB11p
FXB11n
A_ENCOD(4:1)
B_ENCOD(14:1)
D_ENCOD(14:1)
IT_COLL_SENS(12:1)
D_ENCOD(7:5)
HDSTP
A_ENCOD(7:5)
B_ENCOD(7:5)
C_ENCOD(7:5)
II_ENABLE(11:1)
8-E6,1-A9,5-E3
8-F6,1-A9,5-E4>2
8-F6,3-B7,2-B9,#1
6-B5,4-C5,#2
8-C5,6-C8>2,3-B5>2
8-F6,2-A9,5-E4>2
6-B5,4-C5>2,#3
A_ENCOD(11:0)
B_ENCOD(11:0)
D_ENCOD(11:0)
C_ENCOD(11:0)
A_ENCOD(14:9)
C_ENCOD(14:1)
8-E6,1-A9,5-E4>3
8-F6,1-A9,5-B4>2
8-F6,3-B7,2-B9,#1
8-F6,2-A9,5-E5>2
8-E6,1-A9,5-E3
8-F6,2-A9,5-E4>2
8-A6
TABLE_RTBUS(44:1)
8-A4,7-E4>2,#2
6-B5,4-C5,#2
6-B5,4-C5>2,#3
BLOCK PATHNAME $PROJECT_EVEREST/mothFPv4_ASM/mothFPv4
BLOCK SHT 5 OF 8
REV 1 PCN XXXXXXXX DESCRIPTION XXXXXXXXXXXXXXXXXXXXXXXXXXXXXXXXXX
MADE BY NAME DATE DD/MM/YY APPR BY NAME DATE DD/MM/YY
REV 2 PCN XXXXXXXX DESCRIPTION XXXXXXXXXXXXXXXXXXXXXXXXXXXXXXXXXX
MADE BY NAME DATE DD/MM/YY APPR BY NAME DATE DD/MM/YY
MADE SEAL IND. DATE 16/09/98
CHECK BAYLE DATE 16/09/98
APPR ALBESA DATE 16/09/98
OTHER NAME DATE DD/MM/YY
GE Medical Systems
BUC - FRANCE
DESIGN TITLE BACKPLANE LCA BOARD
FIRST MADE FOR EVEREST
DRAWING NO. 2225630SCH
REV A
SIZE 3
SHT/CONT. ON 5 / 8

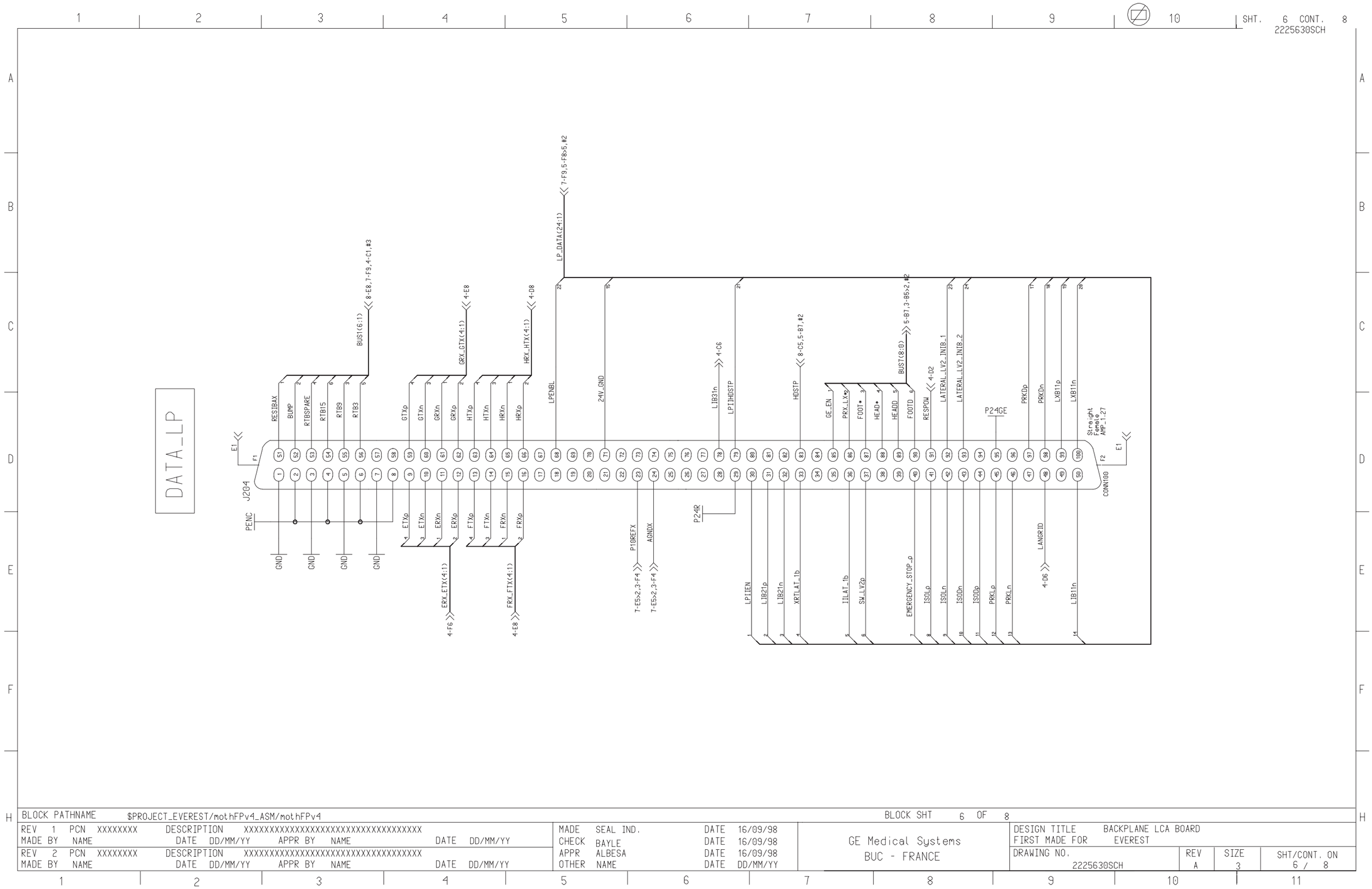

BLOCK PATHNAME $PROJECT_EVEREST/mothFPv4_ASM/mothFPv4				BLOCK SHT 6 OF 8	
REV 1 PCN XXXXXXXX DESCRIPTION XXXXXXXXXXXXXXXXXXXXXXXXXXXXXXXXXX MADE BY NAME DATE DD/MM/YY APPR BY NAME DATE DD/MM/YY	MADE SEAL IND. DATE 16/09/98 CHECK BAYLE DATE 16/09/98 APPR ALBESA DATE 16/09/98 OTHER NAME DATE DD/MM/YY	GE Medical Systems BUC - FRANCE	DESIGN TITLE BACKPLANE LCA BOARD FIRST MADE FOR EVEREST		
REV 2 PCN XXXXXXXX DESCRIPTION XXXXXXXXXXXXXXXXXXXXXXXXXXXXXXXXXX MADE BY NAME DATE DD/MM/YY APPR BY NAME DATE DD/MM/YY			DRAWING NO. 2225630SCH	REV A	SIZE 3	SHT/CONT. ON 6 / 8

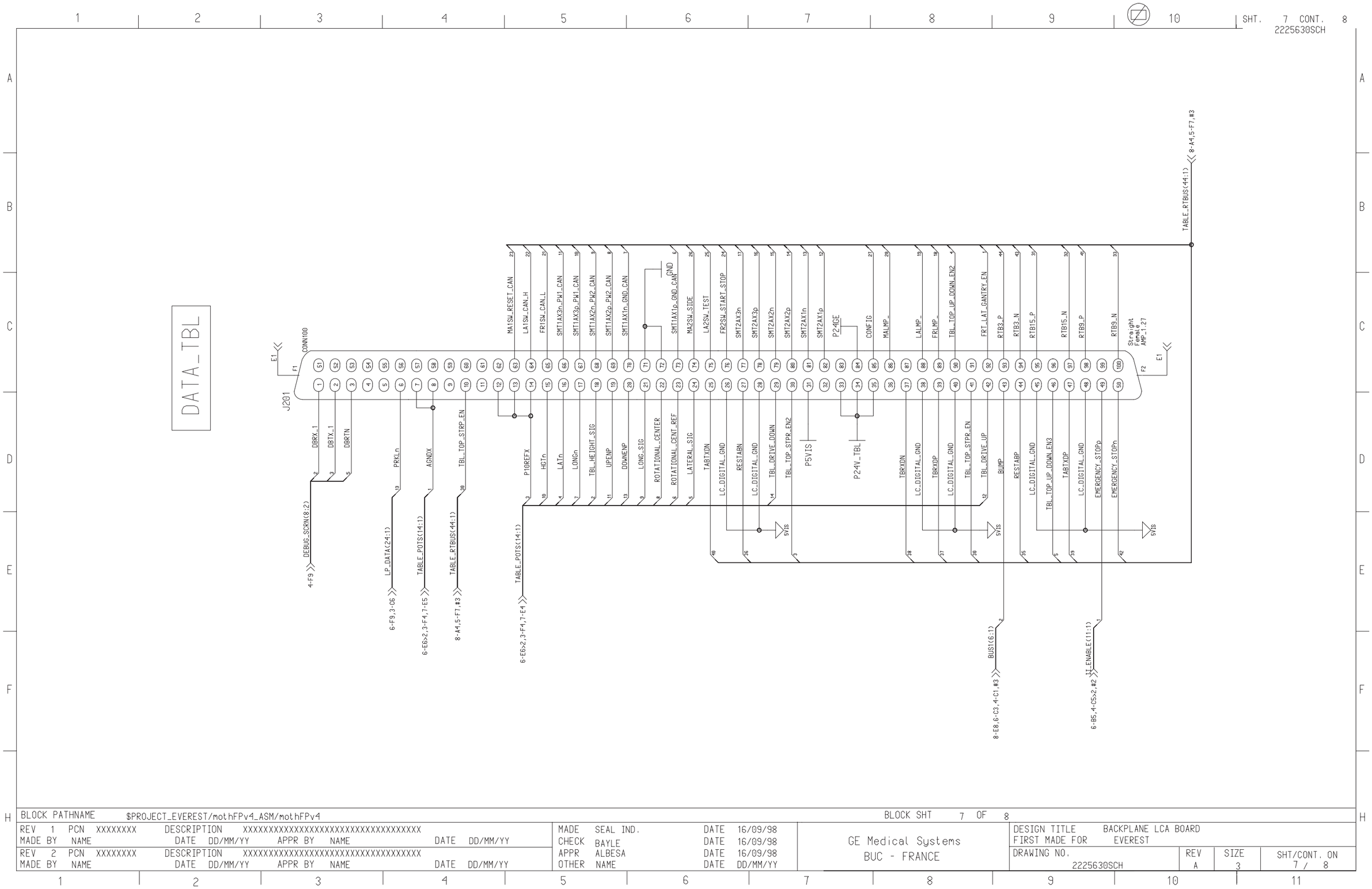

BLOCK PATHNAME $PROJECT_EVEREST/mothFPv4_ASM/mothFPv4								BLOCK SHT 7 OF 8			
REV 1 PCN XXXXXXXX DESCRIPTION XXXXXXXXXXXXXXXXXXXXXXXXXXXXXXXXXX MADE BY NAME DATE DD/MM/YY APPR BY NAME DATE DD/MM/YY				MADE SEAL IND.	DATE 16/09/98	GE Medical Systems BUC - FRANCE		DESIGN TITLE BACKPLANE LCA BOARD FIRST MADE FOR EVEREST			
REV 2 PCN XXXXXXXX DESCRIPTION XXXXXXXXXXXXXXXXXXXXXXXXXXXXXXXXXX MADE BY NAME DATE DD/MM/YY APPR BY NAME DATE DD/MM/YY				CHECK BAYLE	DATE 16/09/98			DRAWING NO. 2225630SCH	REV A	SIZE 3	SHT/CONT. ON 7 / 8
				APPR ALBESA	DATE 16/09/98						
				OTHER NAME	DATE DD/MM/YY						

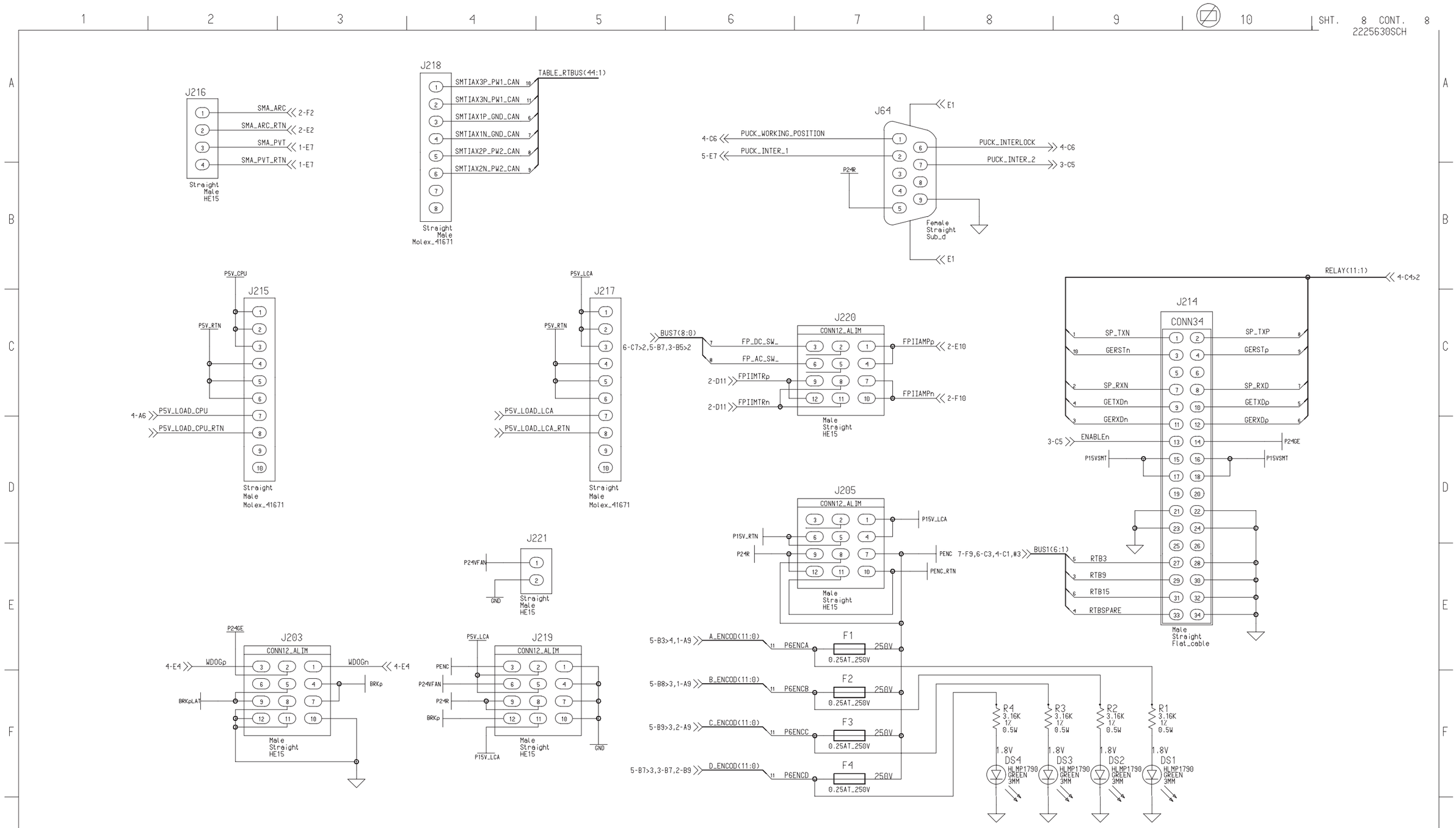

BLOCK PATHNAME $PROJECT_EVEREST/mothFPv4_ASM/mothFPv4			BLOCK SHT 8 OF 8
REV 1 PCN XXXXXXXX DESCRIPTION XXXXXXXXXXXXXXXXXXXXXXXXXXXXXXXXXX MADE BY NAME DATE DD/MM/YY APPR BY NAME DATE DD/MM/YY	MADE SEAL IND. DATE 16/09/98 CHECK BAYLE DATE 16/09/98 APPR ALBESA DATE 16/09/98 OTHER NAME DATE DD/MM/YY	GE Medical Systems BUC - FRANCE	DESIGN TITLE BACKPLANE LCA BOARD FIRST MADE FOR EVEREST
REV 2 PCN XXXXXXXX DESCRIPTION XXXXXXXXXXXXXXXXXXXXXXXXXXXXXXXXXX MADE BY NAME DATE DD/MM/YY APPR BY NAME DATE DD/MM/YY			DRAWING NO. 2225630SCH / REV A / SIZE 3 / SHT/CONT. ON 8 / 8

Blank page.

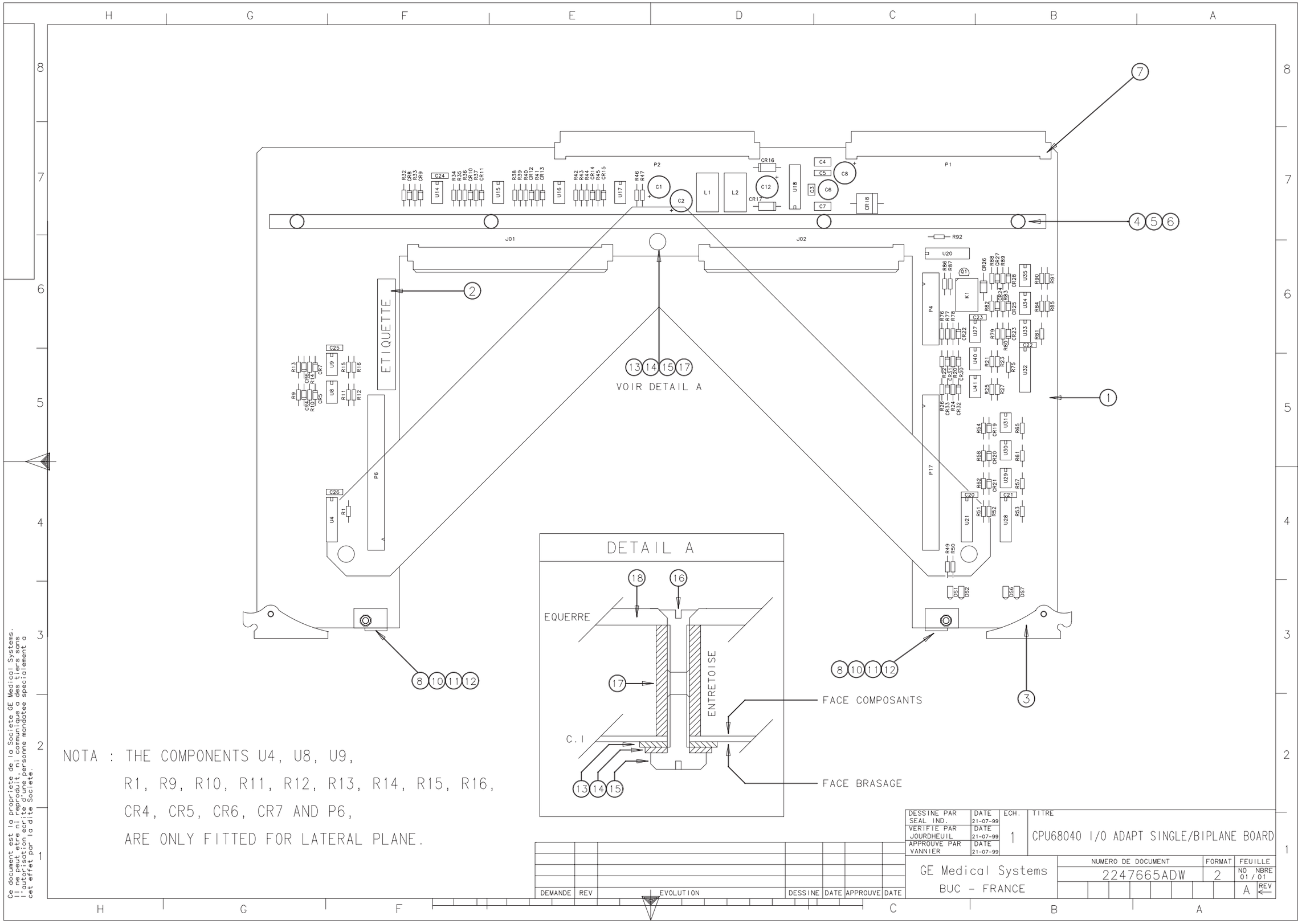

NOTA : THE COMPONENTS U4, U8, U9,
R1, R9, R10, R11, R12, R13, R14, R15, R16,
CR4, CR5, CR6, CR7 AND P6,
ARE ONLY FITTED FOR LATERAL PLANE.

DESSINE PAR	DATE	ECH.	TITRE
SEAL IND.	21-07-99		
VERIFIE PAR JOURDHEUIL	DATE 21-07-99	1	CPU68040 I/O ADAPT SINGLE/BIPLANE BOARD
APPROUVE PAR VANNIER	DATE 21-07-99		

GE Medical Systems
BUC - FRANCE

NUMERO DE DOCUMENT	FORMAT	FEUILLE
2247665ADW	2	NO 01 / 01 NBRE
		A REV

DEMANDE	REV	EVOLUTION	DESSINE	DATE	APPROUVE	DATE

Ce document est la propriete de la Societe GE Medical Systems.
Il ne peut etre ni reproduit, ni communique a des tiers sans
l'autorisation ecrite d'une personne mandatee specialement a
cet effet par la dite Societe.

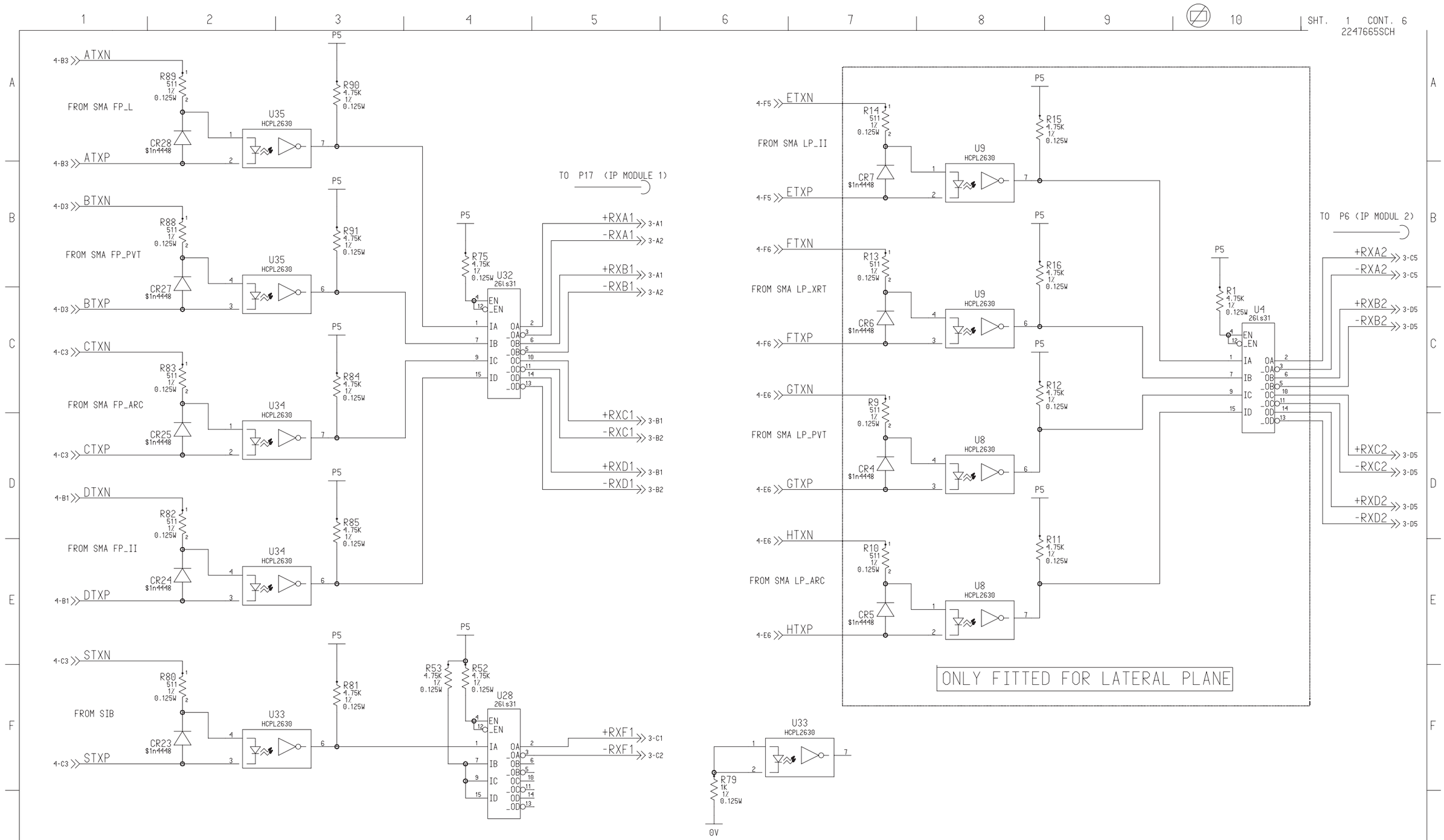

REV 1 PCN XXXXXXXX DESCRIPTION XXXXXXXXXXXXXXXXXXXXXXXXXXXXXXXXXX MADE BY NAME DATE DD/MM/YY APPR BY NAME DATE DD/MM/YY	MADE SEAL SVX DATE 04/06/99 CHECK JOURDHEUIL DATE 04/06/99 APPR VANNIER DATE 04/06/99 OTHER NAME DATE DD/MM/YY	GE Medical Systems BUC - FRANCE	BLOCK SHT 1 OF 6 DESIGN TITLE CPU68040 I/O ADAPT SINGLE/BIPLANE FIRST MADE FOR ZID1				
REV 2 PCN XXXXXXXX DESCRIPTION XXXXXXXXXXXXXXXXXXXXXXXXXXXXXXXXXX MADE BY NAME DATE DD/MM/YY APPR BY NAME DATE DD/MM/YY			DRAWING NO. 2247665SCH	REV A	SIZE 3	SHT/CONT. ON 1 / 6	

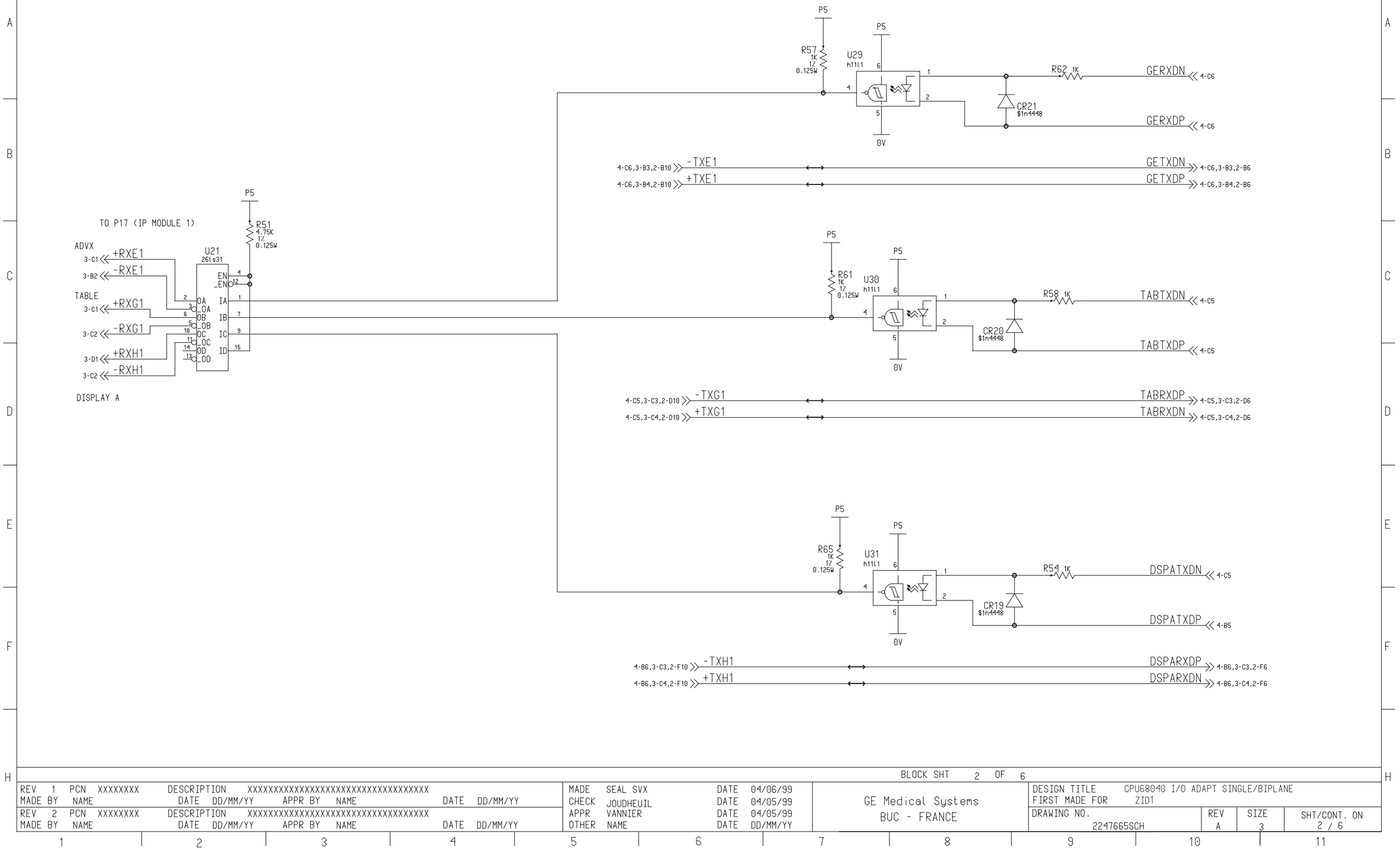

REV 1 PCN XXXXXXXX DESCRIPTION XXXXXXXXXXXXXXXXXXXXXXXXXXXXXXXXX											
MADE BY NAME		DATE DD/MM/YY	APPR BY NAME		DATE DD/MM/YY	MADE SEAL SVX	DATE 04/06/99	GE Medical Systems BUC - FRANCE	DESIGN TITLE CPU68040 I/O ADAPT SINGLE/BIPLANE		
REV 2 PCN XXXXXXXX DESCRIPTION XXXXXXXXXXXXXXXXXXXXXXXXXXXXXXXXX						CHECK JOUDHEUIL	DATE 04/05/99		FIRST MADE FOR ZID1		
MADE BY NAME		DATE DD/MM/YY	APPR BY NAME		DATE DD/MM/YY	APPR VANNIER	DATE 04/05/99		DRAWING NO. 2247665SCH	REV A	SIZE 3
						OTHER NAME	DATE DD/MM/YY				SHT/CONT. ON 2 / 6

BLOCK SHT 2 OF 6

1 2 3 4 5 6 7 8 9 10 11

FRONTAL POSITIONER RACK

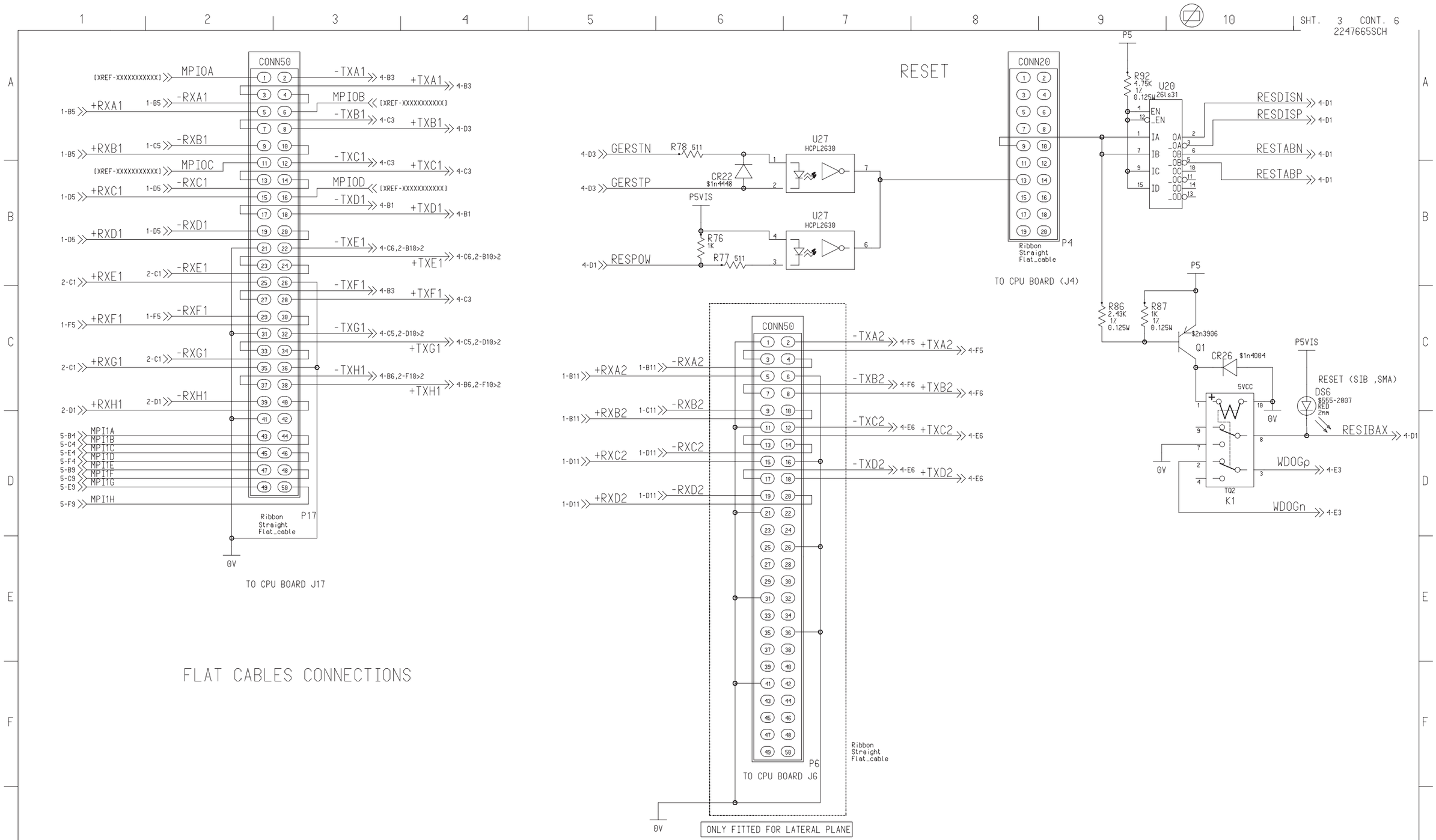

BLOCK SHT 3 OF 6

REV 1 PCN XXXXXXXX DESCRIPTION XXXXXXXXXXXXXXXXXXXXXXXXXXXXXXXXXX	MADE SEAL SVX	DATE 04/06/99	GE Medical Systems BUC - FRANCE	DESIGN TITLE CPU68040 I/O ADAPT SINGLE/BIPLANE			
MADE BY NAME DATE DD/MM/YY APPR BY NAME DATE DD/MM/YY	CHECK JOURDHEUIL	DATE 04/06/99		FIRST MADE FOR ZID1			
REV 2 PCN XXXXXXXX DESCRIPTION XXXXXXXXXXXXXXXXXXXXXXXXXXXXXXXXXX	APPR VANNIER	DATE 04/06/99		DRAWING NO. 2247665SCH	REV A	SIZE 3	SHT/CONT. ON 3 / 6
MADE BY NAME DATE DD/MM/YY APPR BY NAME DATE DD/MM/YY	OTHER NAME	DATE DD/MM/YY					

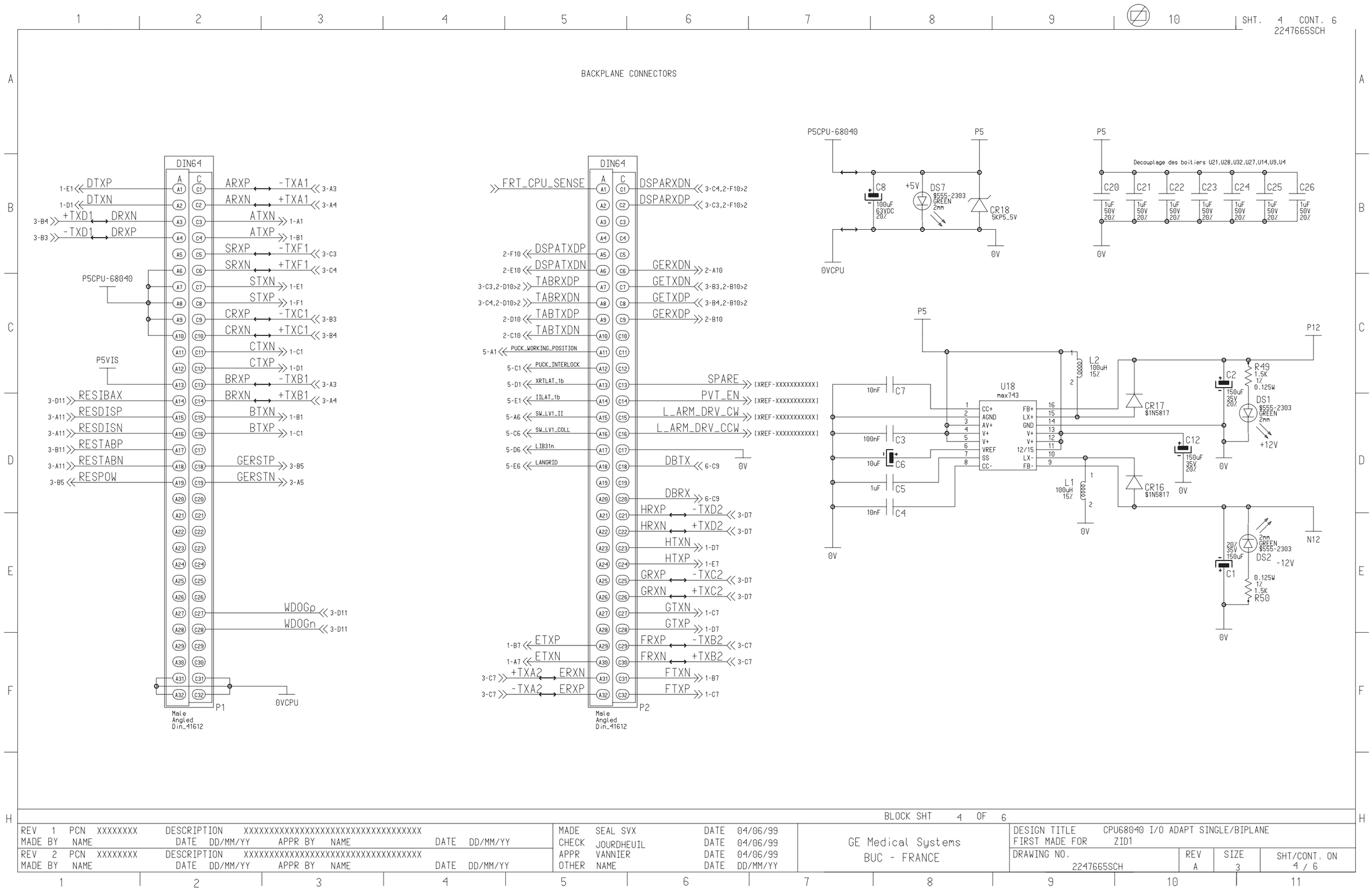

REV 1 PCN XXXXXXXX DESCRIPTION XXXXXXXXXXXXXXXXXXXXXXXXXXXXXXXXXX													
MADE BY NAME DATE DD/MM/YY APPR BY NAME DATE DD/MM/YY													
REV 2 PCN XXXXXXXX DESCRIPTION XXXXXXXXXXXXXXXXXXXXXXXXXXXXXXXXXX													
MADE BY NAME DATE DD/MM/YY APPR BY NAME DATE DD/MM/YY													
MADE SEAL SVX DATE 04/06/99	CHECK JOURDHEUIL DATE 04/06/99	APPR VANNIER DATE 04/06/99	OTHER NAME DATE DD/MM/YY	GE Medical Systems BUC - FRANCE	BLOCK SHT 4 OF 6	DESIGN TITLE CPU68040 I/O ADAPT SINGLE/BIPLANE	FIRST MADE FOR ZID1	DRAWING NO. 2247665SCH	REV A	SIZE 3	SHT/CONT. ON 4 / 6		

FRONTAL POSITIONER RACK

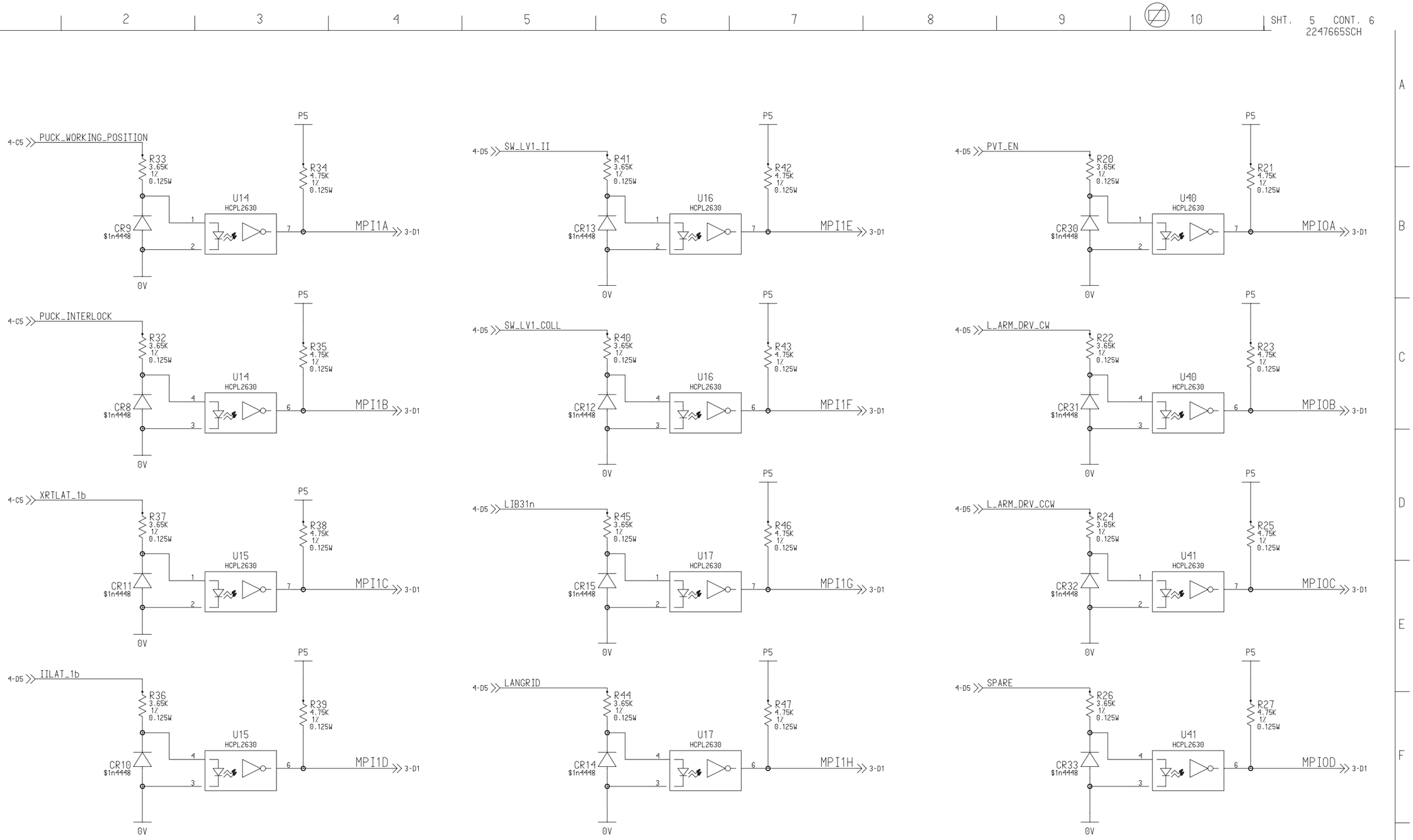

BLOCK SHT 5 OF 6

REV 1 PCN XXXXXXXX DESCRIPTION XXXXXXXXXXXXXXXXXXXXXXXXXXXXXXXXX			MADE SEAL SVX	DATE 04/06/99	GE Medical Systems BUC - FRANCE	DESIGN TITLE CPU68040 I/O ADAPT SINGLE/BIPLANE	
MADE BY NAME DATE DD/MM/YY APPR BY NAME DATE DD/MM/YY			CHECK JOURDHEUIL	DATE 04/06/99		FIRST MADE FOR ZID1	
REV 2 PCN XXXXXXXX DESCRIPTION XXXXXXXXXXXXXXXXXXXXXXXXXXXXXXXXX			APPR VANNIER	DATE 04/05/99		DRAWING NO. 2247665SCH	REV A / SIZE 3 / SHT/CONT. ON 5 / 6
MADE BY NAME DATE DD/MM/YY APPR BY NAME DATE DD/MM/YY			OTHER NAME	DATE DD/MM/YY			

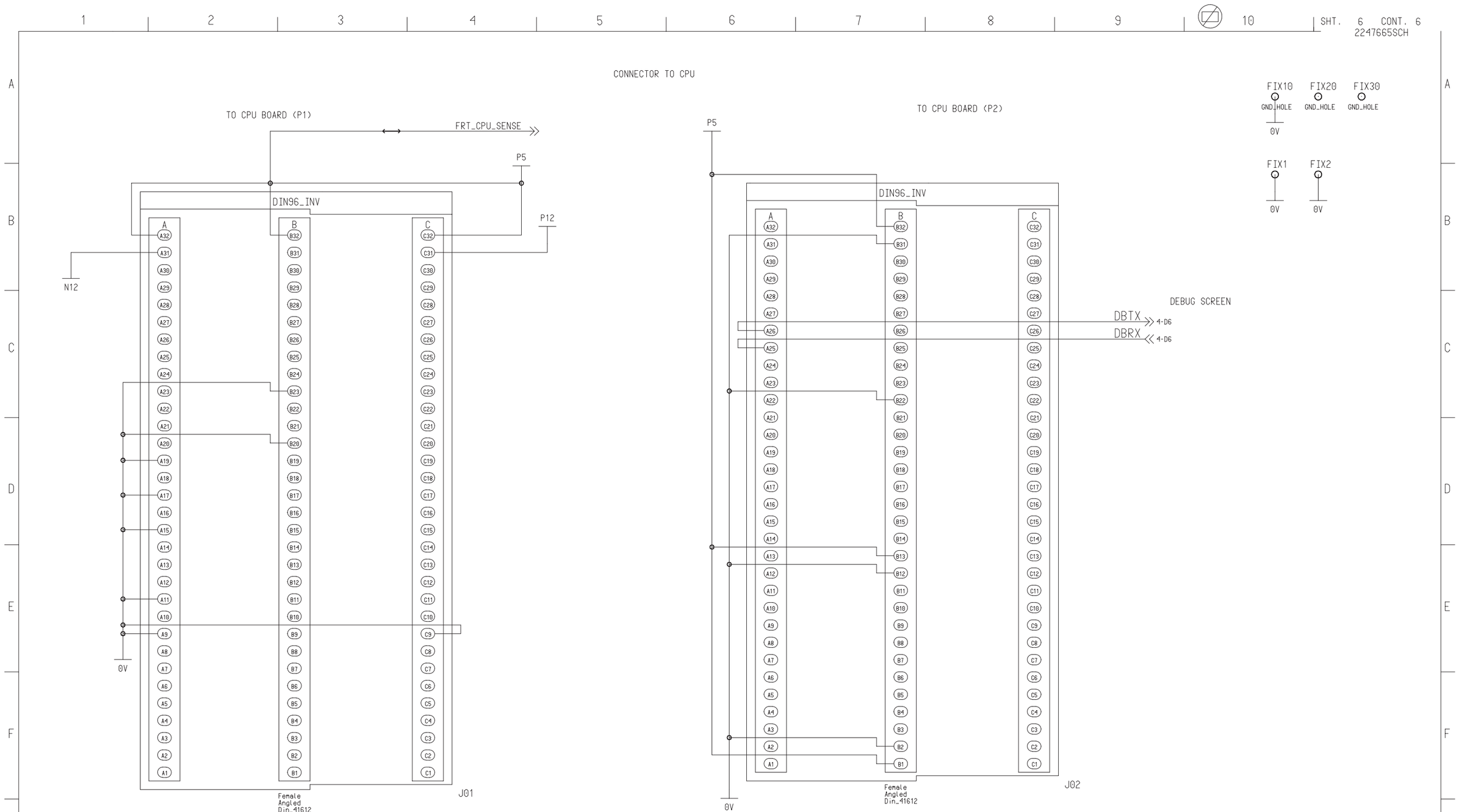

REV 1	PCN XXXXXXXX	DESCRIPTION XXXXXXXXXXXXXXXXXXXXXXXXXXXXXXXXXX									
MADE BY NAME		DATE DD/MM/YY	APPR BY NAME		DATE DD/MM/YY	MADE SEAL SVX	DATE 04/06/99	GE Medical Systems BUC - FRANCE	DESIGN TITLE CPU68040 I/O ADAPT SINGLE/BIPLANE		
REV 2	PCN XXXXXXXX	DESCRIPTION XXXXXXXXXXXXXXXXXXXXXXXXXXXXXXXXXX				CHECK JOURDHEUIL	DATE 04/06/99		FIRST MADE FOR ZID1		
MADE BY NAME		DATE DD/MM/YY	APPR BY NAME		DATE DD/MM/YY	APPR VANNIER	DATE 04/06/99		DRAWING NO. 2247665SCH	REV A	SIZE 3
						OTHER NAME	DATE DD/MM/YY		BLOCK SHT 6 OF 6		SHT/CONT. ON 6 / 6

FRONTAL POSITIONER RACK

Blank page.

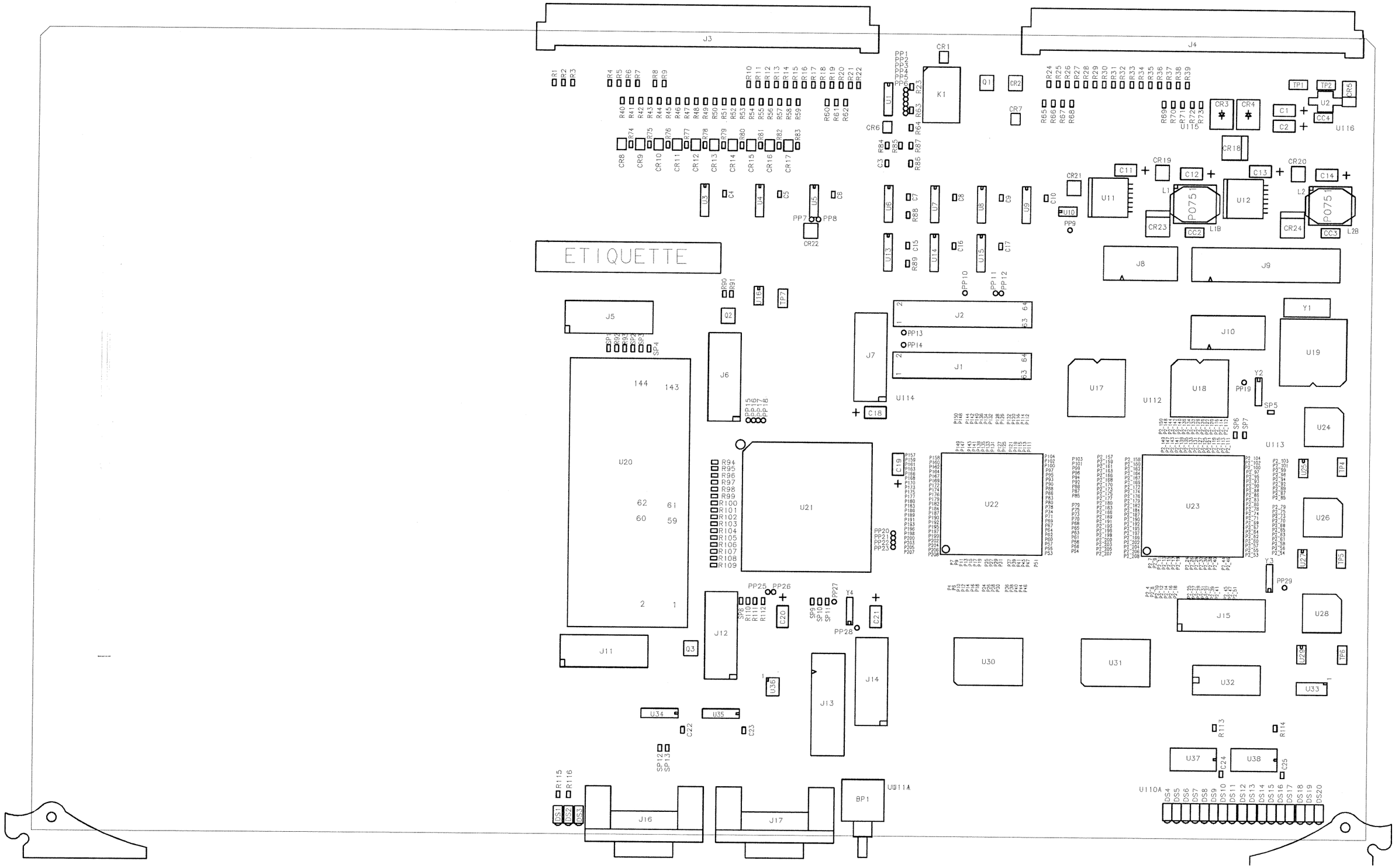

FRONTAL POSITIONER RACK

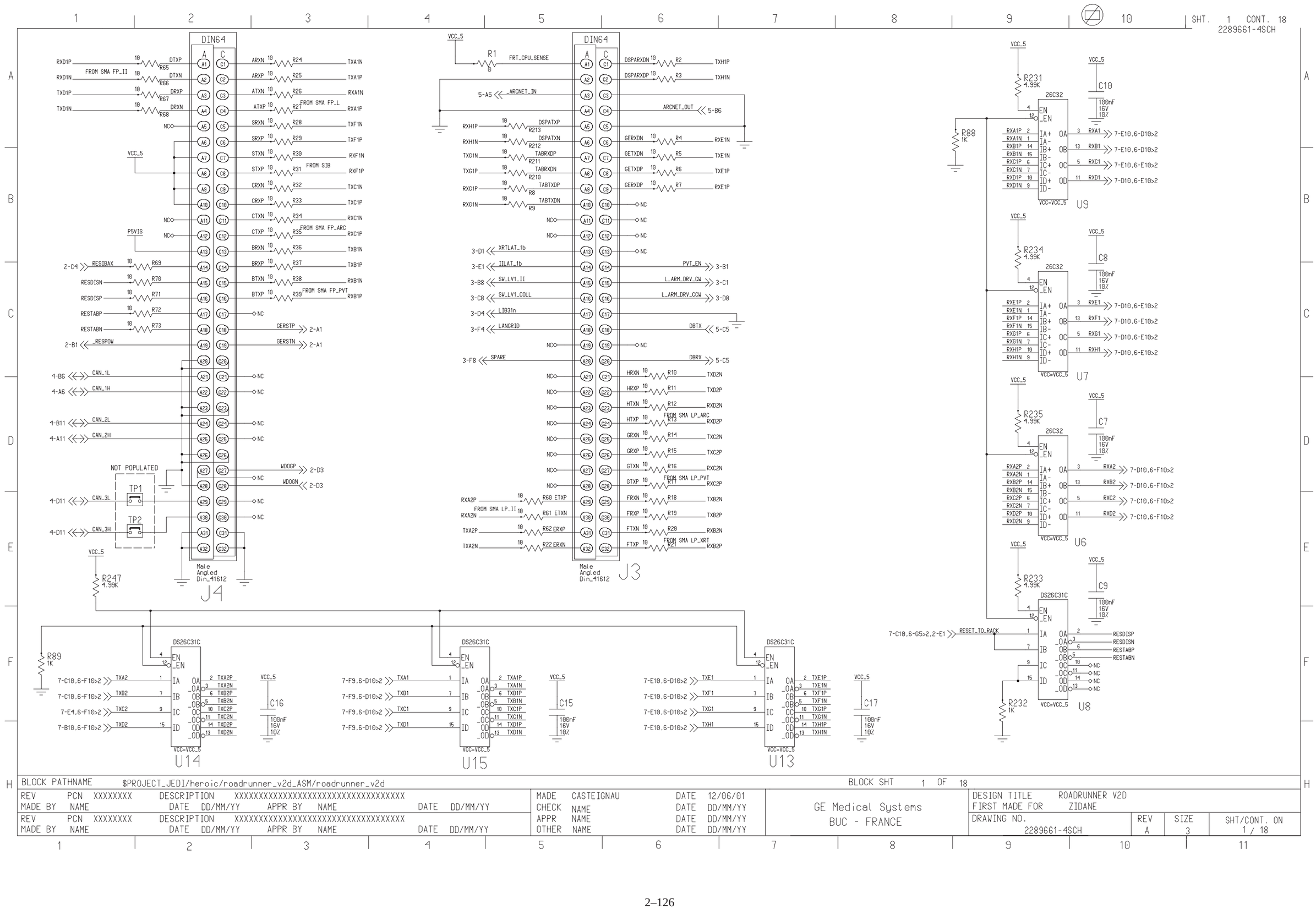
SHT. 1 CONT. 18
2289661-4SCH
DIN64
J4
Male Angled Din_41612
J3
U14
U15
U13
U9
U7
U6
U8
DS26C31C
26C32
R247 4.99K
R89 1K
R88 1K
R231 4.99K
R234 4.99K
R235 4.99K
R233 4.99K
R232 1K
C10 100nF 16V 10%
C8
C7
C9
C16
C15
C17
TP1
TP2
NOT POPULATED
FROM SMA FP_II
FROM SMA FP_L
FROM SIB
FROM SMA FP_ARC
FROM SMA FP_PVT
FROM SMA LP_ARC
FROM SMA LP_PVT
FROM SMA LP_II
FROM SMA LP_XRT
RESET_TO_RACK
VCC_5
VCC=VCC_5
BLOCK PATHNAME $PROJECT_JEDI/heroic/roadrunner_v2d_ASM/roadrunner_v2d
BLOCK SHT 1 OF 18
DESIGN TITLE ROADRUNNER V2D
FIRST MADE FOR ZIDANE
GE Medical Systems
BUC - FRANCE
DRAWING NO. 2289661-4SCH
REV A
SIZE 3
SHT/CONT. ON 1 / 18

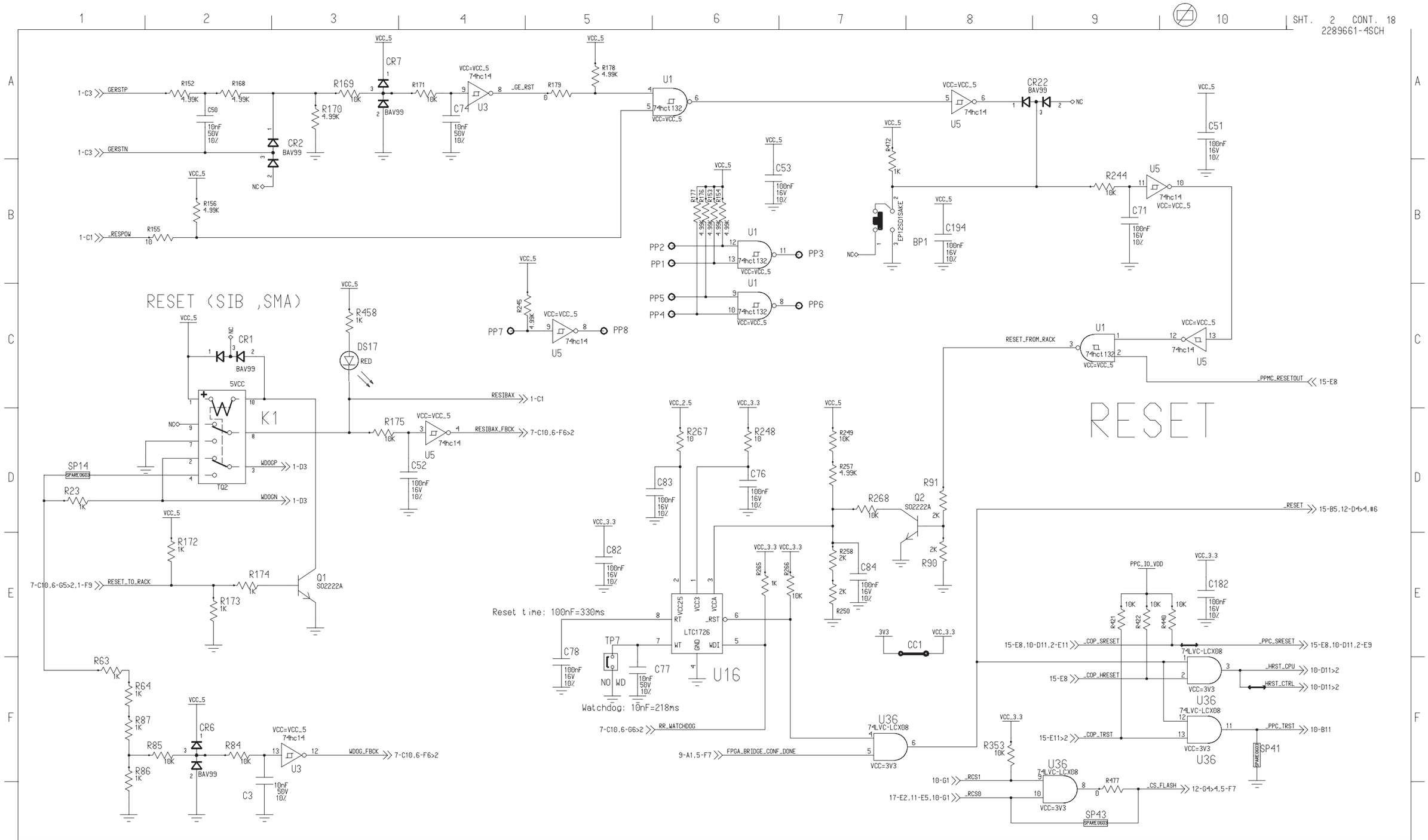

FRONTAL POSITIONER RACK

PARALLEL IOs

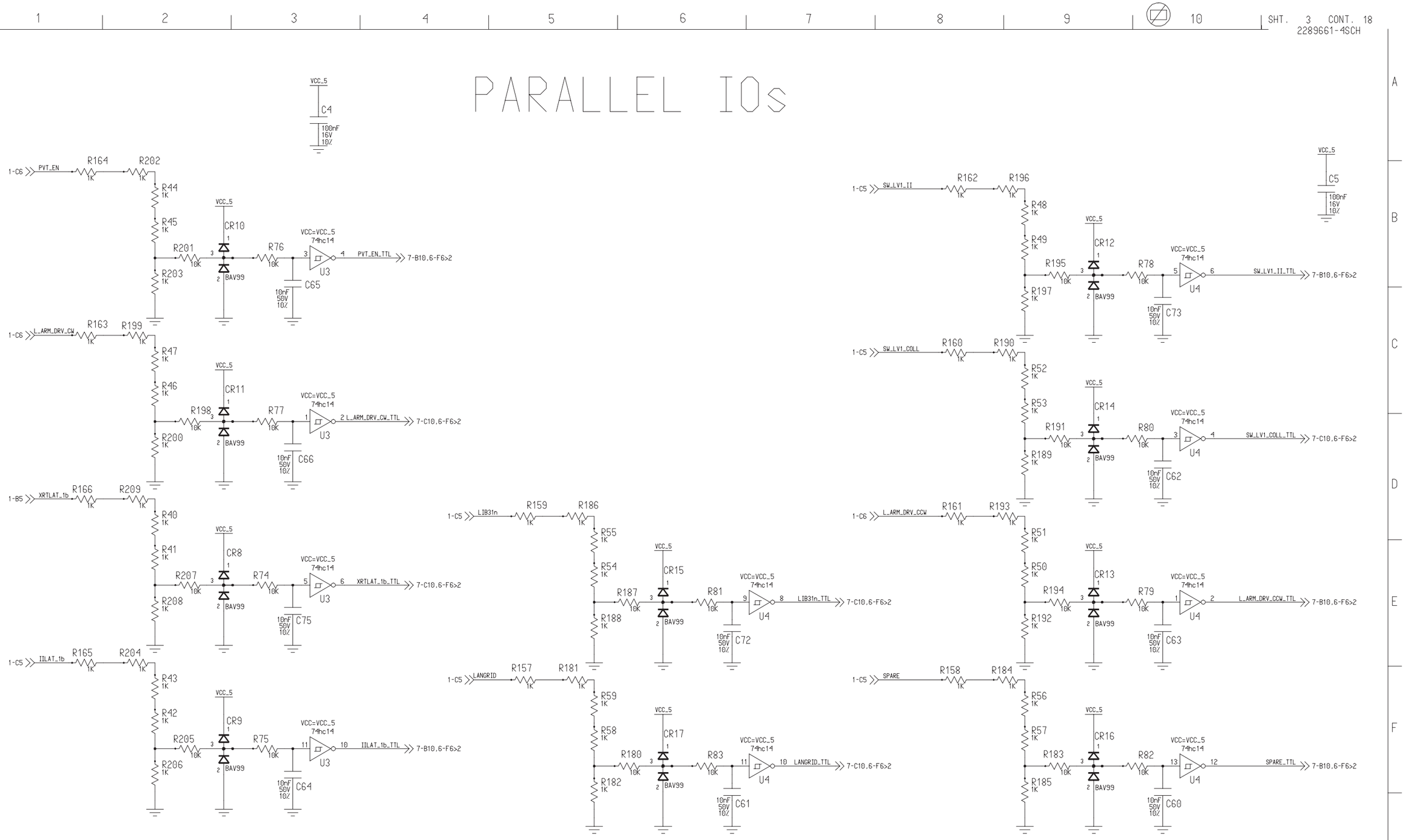

BLOCK PATHNAME $PROJECT_JEDI/heroic/roadrunner_v2d_ASM/roadrunner_v2d								BLOCK SHT 3 OF 18			
REV PCN XXXXXXXX DESCRIPTION XXXXXXXXXXXXXXXXXXXXXXXXXXXXXXXXXX MADE BY NAME DATE DD/MM/YY APPR BY NAME DATE DD/MM/YY			MADE CASTEIGNAU DATE 12/06/01 CHECK NAME DATE DD/MM/YY APPR NAME DATE DD/MM/YY OTHER NAME DATE DD/MM/YY		GE Medical Systems BUC - FRANCE		DESIGN TITLE ROADRUNNER V2D FIRST MADE FOR ZIDANE				
REV PCN XXXXXXXX DESCRIPTION XXXXXXXXXXXXXXXXXXXXXXXXXXXXXXXXXX MADE BY NAME DATE DD/MM/YY APPR BY NAME DATE DD/MM/YY							DRAWING NO. 2289661-4SCH	REV A	SIZE 3	SHT/CONT. ON 3 / 18	

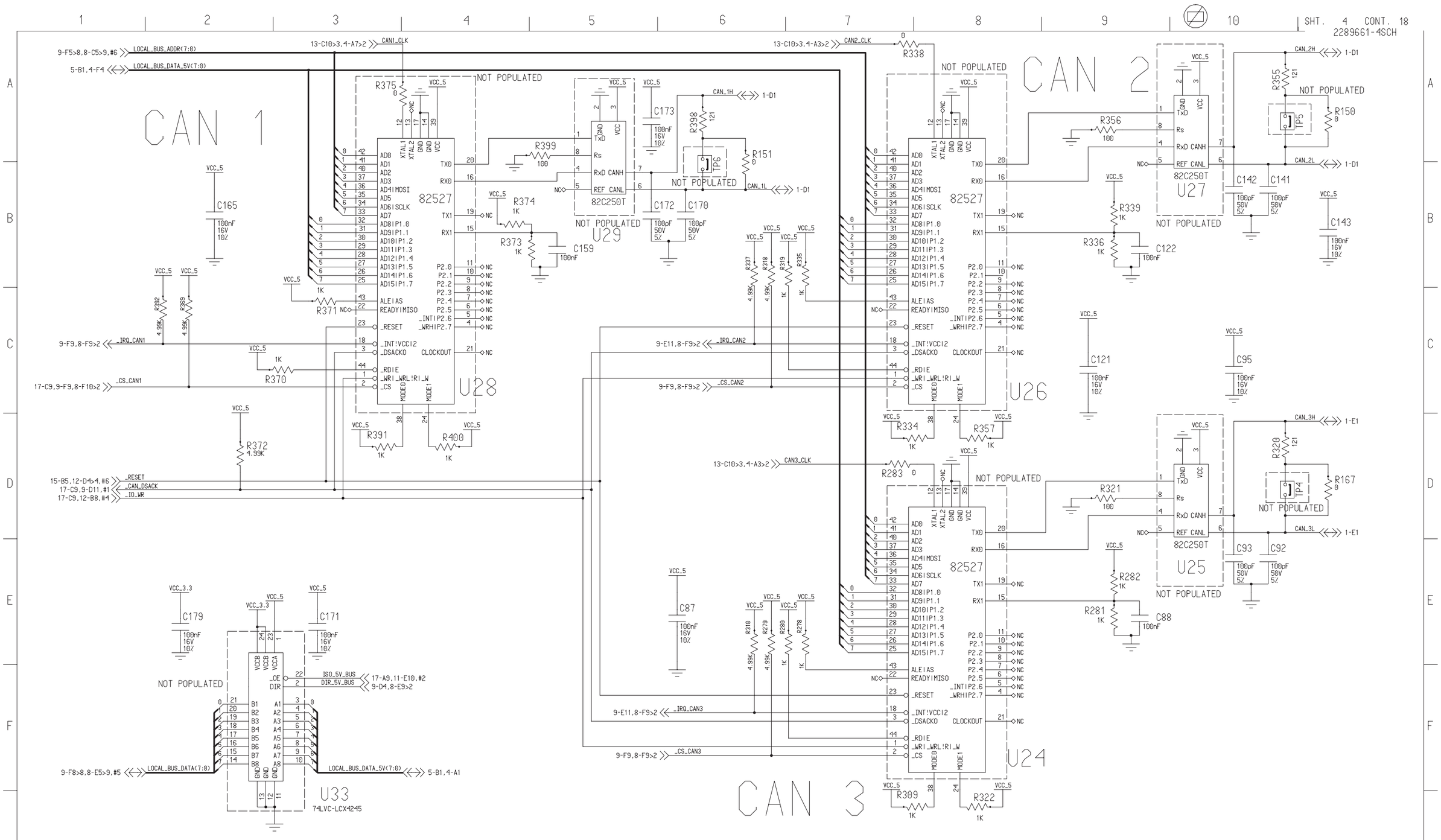

FRONTAL POSITIONER RACK

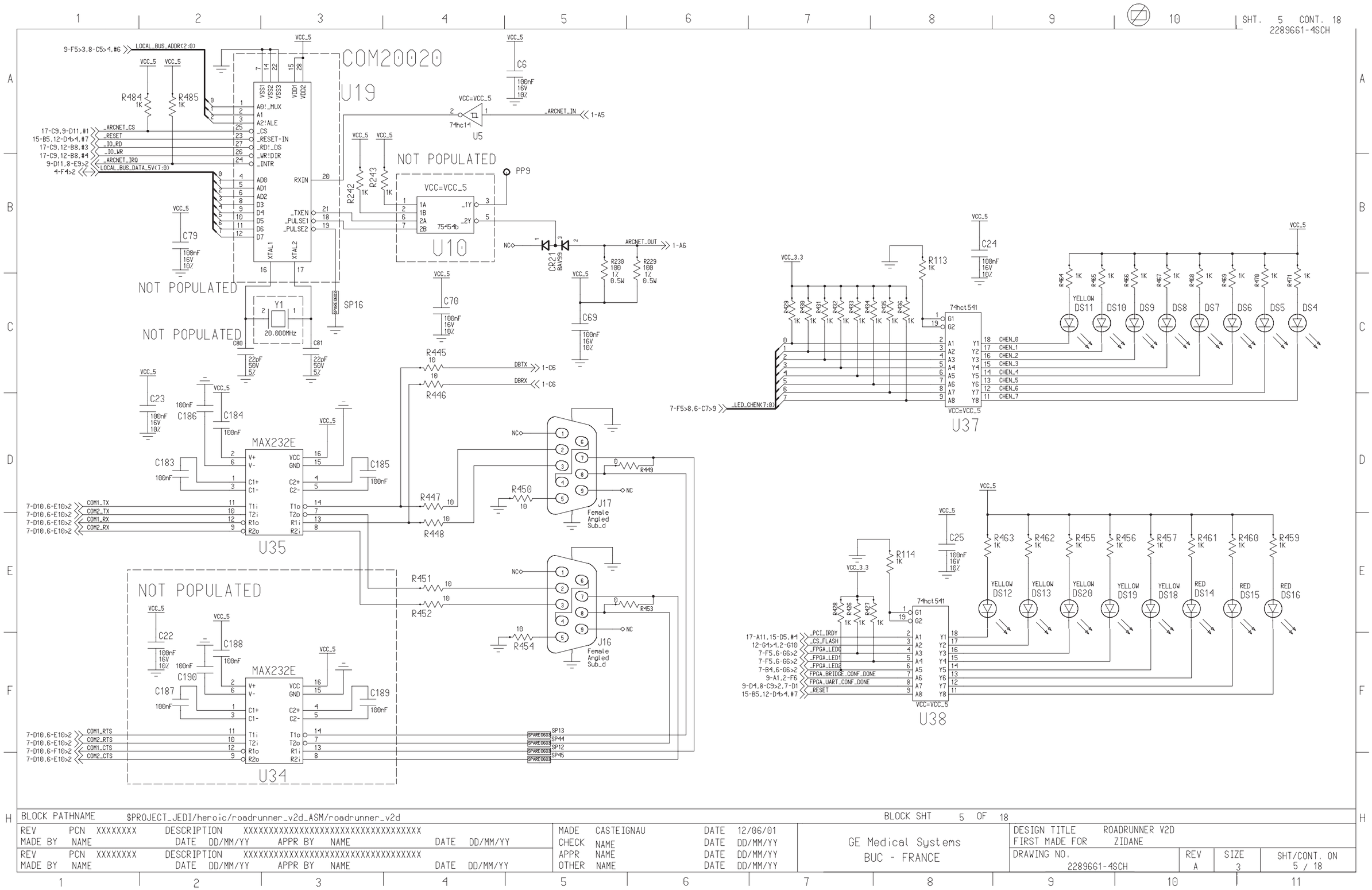

BLOCK PATHNAME	$PROJECT_JEDI/heroic/roadrunner_v2d_ASM/roadrunner_v2d				BLOCK SHT 5 OF 18		
REV PCN XXXXXXXX DESCRIPTION XXXXXXXXXXXXXXXXXXXXXXXXXXXXXXXXXX MADE BY NAME DATE DD/MM/YY APPR BY NAME DATE DD/MM/YY		MADE CASTEIGNAU DATE 12/06/01 CHECK NAME DATE DD/MM/YY APPR NAME DATE DD/MM/YY OTHER NAME DATE DD/MM/YY	GE Medical Systems BUC - FRANCE	DESIGN TITLE ROADRUNNER V2D FIRST MADE FOR ZIDANE			
REV PCN XXXXXXXX DESCRIPTION XXXXXXXXXXXXXXXXXXXXXXXXXXXXXXXXXX MADE BY NAME DATE DD/MM/YY APPR BY NAME DATE DD/MM/YY				DRAWING NO. 2289661-4SCH	REV A	SIZE 3	SHT/CONT. ON 5 / 18

SHT. 6 CONT. 18
2289661-4SCH

FPGA UART PINOUT DEFINITION

NOT POPULATED

CONN26

RR_EXTENTION_IO(19:0)

Male
Straight
Flat_cable

J9

VCC_3.3

VCC_5

UNUSED

R478 1K

R479 1K

VCC_3.3

DEBUG

LOCAL BUS

15-B5,12-D4>4,#7 _RESET P2_184 15-B5,12-D4>4,#7

10-E11,7-D4,6-E3 PCI_CLK3 P2_183 10-E11,7-D4,6-E1
13-A9,7-D4,6-E3 UART_CLK P2_79 13-A9,7-D4,6-E1
17-A9,9-F7,#3 _CS_WR_FPGA_UART P2_206 17-A9,9-F7,#3
17-A11,9-F7,#3 _CS_RD_FPGA_UART P2_204 17-A11,9-F7,#3

9-F5>8,8-C5>9,#7 LOCAL_BUS_ADDR(7:0)

UART_CONF_DATA 17-G9,13-B6,#6

9-F8>8,8-E5>9,#6 LOCAL_BUS_DATA(7:0)

IOs

UARTs

FRONTAL POSITIONER RACK

BLOCK PATHNAME	$PROJECT_JEDI/heroic/roadrunner_v2d_ASM/roadrunner_v2d		BLOCK SHT 6 OF 18
REV PCN XXXXXXXX DESCRIPTION XXXXXXXXXXXXXXXXXXXXXXXXXXXXXXXXXX MADE BY NAME DATE DD/MM/YY APPR BY NAME DATE DD/MM/YY	MADE CASTEIGNAU DATE 12/06/01 CHECK NAME DATE DD/MM/YY APPR NAME DATE DD/MM/YY OTHER NAME DATE DD/MM/YY	GE Medical Systems BUC - FRANCE	DESIGN TITLE ROADRUNNER V2D FIRST MADE FOR ZIDANE DRAWING NO. 2289661-4SCH / REV A / SIZE 3 / SHT/CONT. ON 6 / 18
REV PCN XXXXXXXX DESCRIPTION XXXXXXXXXXXXXXXXXXXXXXXXXXXXXXXXXX MADE BY NAME DATE DD/MM/YY APPR BY NAME DATE DD/MM/YY			

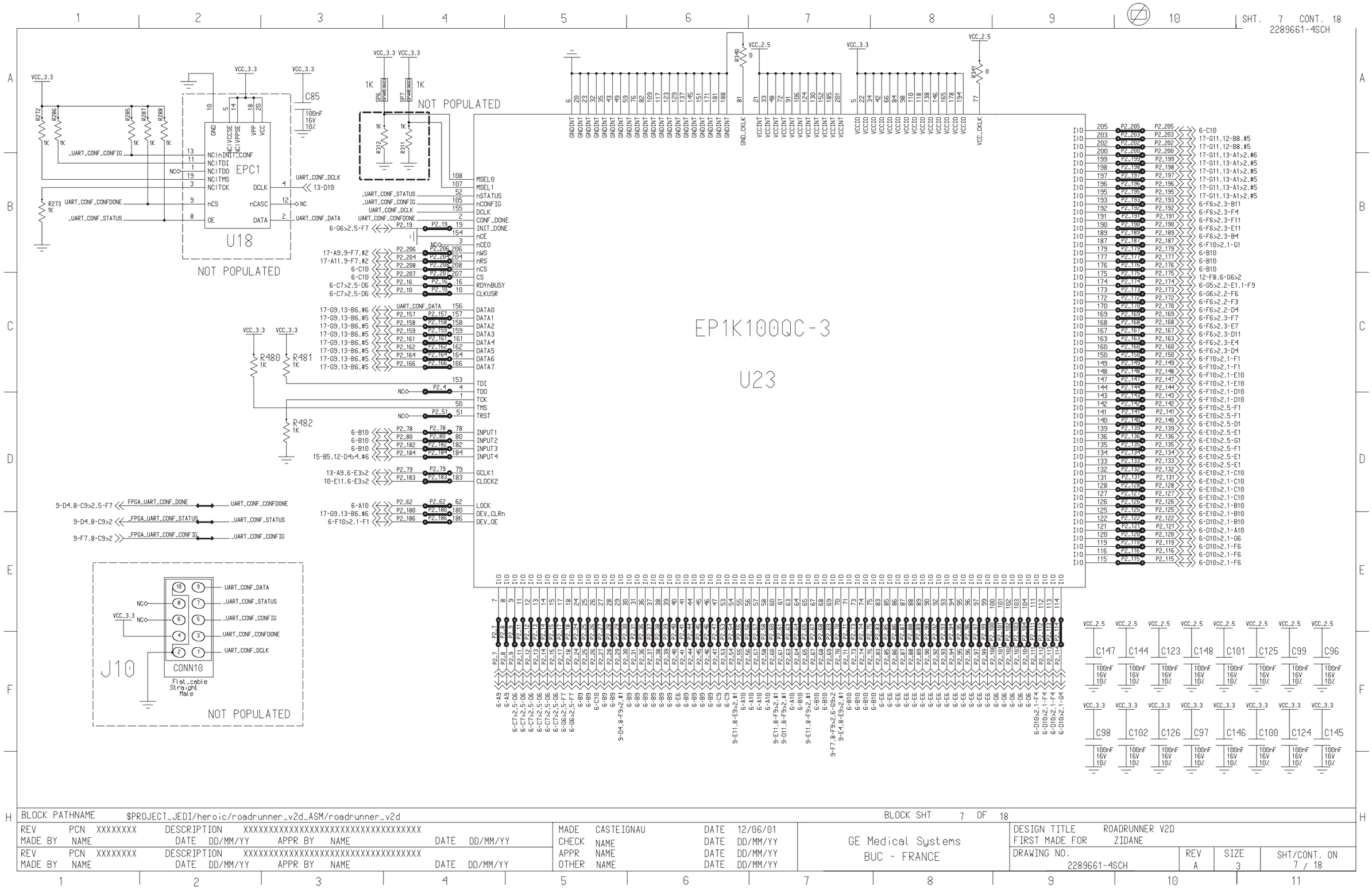

BLOCK PATHNAME $PROJECT_JEDI/heroic/roadrunner_v2d_ASM/roadrunner_v2d				BLOCK SHT 7 OF 18	
REV PCN XXXXXXXX DESCRIPTION XXXXXXXXXXXXXXXXXXXXXXXXXXXXXXXXXX MADE BY NAME DATE DD/MM/YY APPR BY NAME DATE DD/MM/YY	MADE CASTEIGNAU DATE 12/06/01 CHECK NAME DATE DD/MM/YY APPR NAME DATE DD/MM/YY OTHER NAME DATE DD/MM/YY	GE Medical Systems BUC - FRANCE	DESIGN TITLE ROADRUNNER V2D FIRST MADE FOR ZIDANE		
REV PCN XXXXXXXX DESCRIPTION XXXXXXXXXXXXXXXXXXXXXXXXXXXXXXXXXX MADE BY NAME DATE DD/MM/YY APPR BY NAME DATE DD/MM/YY			DRAWING NO. 2289661-4SCH	REV A	SIZE 3 / SHT/CONT. ON 7 / 18

SHT. 8 CONT. 18
2289661-4SCH

PCI BRIDGE FPGA PINOUT DEFINITION

PMC

15-B2,9-D11,8-B2 _PMC_PRESENT P131 15-B2,9-D11,8-B1
15-F8,9-D11,8-B2 CARRIER_MONARCH P128 15-F8,9-D11,8-B1

9-D11>4,15-F1,#1 _PMC_IRQ(3:0)

0	_PMC_IRQ(0)	P127	15-F1,9-D11,8-B1
1	_PMC_IRQ(1)	P126	15-F1,9-D11,8-B1
2	_PMC_IRQ(2)	P125	15-F1,9-E11,8-B1
3	_PMC_IRQ(3)	P122	15-F1,9-E11,8-B1

POWERPC

11-E9>5,9-C11>5,#3 _PPC_IRQ(0:4)

0	_PPC_IRQ(0)	P150	17-C11,11-E9,#3
1	_PPC_IRQ(1)	P149	17-C11,11-E9,#3
2	_PPC_IRQ(2)	P202	17-C11,11-E9,#3
3	_PPC_IRQ(3)	P200	17-C11,11-E9,#3
4	_PPC_IRQ(4)	P148	11-E9,10-F9,#2

PCI

9-B11>32,#4 PCI_AD(31:0)

0	PCI_AD(0)	P157	17-G6,15-G1,#3
1	PCI_AD(1)	P158	17-G6,15-G1,#3
2	PCI_AD(2)	P159	17-G6,15-G1,#3
3	PCI_AD(3)	P160	17-G6,15-G1,#3
4	PCI_AD(4)	P161	17-G6,15-G1,#3
5	PCI_AD(5)	P162	17-G6,15-G1,#3
6	PCI_AD(6)	P163	17-G6,15-G1,#3
7	PCI_AD(7)	P164	17-G6,15-G1,#3
8	PCI_AD(8)	P166	17-G6,15-G1,#3
9	PCI_AD(9)	P167	17-G6,15-G1,#3
10	PCI_AD(10)	P168	17-G6,15-G1,#3
11	PCI_AD(11)	P169	17-G6,15-G1,#3
12	PCI_AD(12)	P170	17-G6,15-G1,#3
13	PCI_AD(13)	P172	17-G6,15-G1,#3
14	PCI_AD(14)	P173	17-G6,15-G1,#3
15	PCI_AD(15)	P174	17-G6,15-G1,#3
16	PCI_AD(16)	P175	17-G6,15-G1,#3
17	PCI_AD(17)	P176	17-G6,15-C5>2,#3
18	PCI_AD(18)	P177	17-G6,15-G1,#3
19	PCI_AD(19)	P179	17-G6,15-G1,#3
20	PCI_AD(20)	P180	17-G6,15-G1,#3
21	PCI_AD(21)	P187	17-G6,15-G1,#3
22	PCI_AD(22)	P189	17-G6,15-G1,#3
23	PCI_AD(23)	P190	17-G6,15-G1,#3
24	PCI_AD(24)	P191	17-G6,15-G1,#3
25	PCI_AD(25)	P192	17-G6,15-G1,#3
26	PCI_AD(26)	P193	17-G6,15-G1,#3
27	PCI_AD(27)	P195	17-G6,15-G1,#3
28	PCI_AD(28)	P196	17-G6,15-G1,#3
29	PCI_AD(29)	P197	17-G6,15-G1,#3
30	PCI_AD(30)	P198	17-G6,15-G1,#3
31	PCI_AD(31)	P199	17-G6,15-G1,#3

9-C11>4,17-B11,#3 _PCI_C_BE(3:0)

0	_PCI_C_BE(0)	P147	17-B11,15-G1,#3
1	_PCI_C_BE(1)	P144	17-B11,15-G1,#3
2	_PCI_C_BE(2)	P143	17-B11,15-G1,#3
3	_PCI_C_BE(3)	P142	17-B11,15-G1,#3

15-D2,10-F8,#2 PCI_PAR P208 15-D2,10-F8,#2
17-A11,15-D2,#4 _PCI_FRAME P140 17-A11,15-D2,#4
17-A11,15-D5,#5 _PCI_IRDY P139 17-A11,15-D5,#5
17-C11,15-D2,#4 _PCI_DEVSEL P207 17-C11,15-D2,#4
17-B11,15-D5,#4 _PCI_TRDY P206 17-B11,15-D5,#4
17-B11,15-D8,#4 _PCI_STOP P205 17-B11,15-D8,#4
17-C11,15-D5,#4 _PCI_PERR P204 17-C11,15-D5,#4
17-C11,15-D8,#4 _PCI_SERR P203 17-C11,15-D8,#4

10-E11,9-D4,8-G2 PCI_CLK2 P183 10-E11,9-D4,8-G1
15-B5,12-D4>4,#7 _RESET P184 15-B5,12-D4>4,#7

LOCAL_BUS_ADDR(19:0) 9-F5>20,7-A10>8,#7

17-G11,12-B8,#6	P7	LOCAL_BUS_ADDR(0)	0	
17-G11,12-B8,#6	P8	LOCAL_BUS_ADDR(1)	1	
17-G11,13-A1>2,#7	P18	LOCAL_BUS_ADDR(2)	2	
17-G11,13-A1>2,#6	P17	LOCAL_BUS_ADDR(3)	3	
17-G11,13-A1>2,#6	P16	LOCAL_BUS_ADDR(4)	4	
17-G11,13-A1>2,#6	P15	LOCAL_BUS_ADDR(5)	5	
17-G11,13-A1>2,#6	P14	LOCAL_BUS_ADDR(6)	6	
17-G11,13-A1>2,#6	P13	LOCAL_BUS_ADDR(7)	7	
17-G11,13-A1>2,#6	P12	LOCAL_BUS_ADDR(8)	8	
17-G11,13-A1>2,#3	P11	LOCAL_BUS_ADDR(9)	9	
17-G11,13-A1>2,#3	P10	LOCAL_BUS_ADDR(10)	10	
17-G11,13-A1>2,#3	P9	LOCAL_BUS_ADDR(11)	11	
17-G11,13-A1>2,#3	P24	LOCAL_BUS_ADDR(12)	12	
17-G11,13-A1>2,#3	P25	LOCAL_BUS_ADDR(13)	13	
17-G11,13-A1>2,#3	P26	LOCAL_BUS_ADDR(14)	14	
17-G11,13-A1>2,#3	P27	LOCAL_BUS_ADDR(15)	15	
17-G11,13-A1>2,#2	P28	LOCAL_BUS_ADDR(16)	16	
13-A1>2,9-F6,8-C6	P29	LOCAL_BUS_ADDR(17)	17	
13-A1>2,9-F6,8-C6	P30	LOCAL_BUS_ADDR(18)	18	
13-A1>2,9-F6,8-C6	P19	LOCAL_BUS_ADDR(19)	19	

LOCAL BUS

9-F7,7-E1,8-C10 P57 _FPGA_UART_CONF_CONFIG 9-F7,7-E1,8-C9
9-D4,7-E1,8-C10 P80 _FPGA_UART_CONF_STATUS 9-D4,7-E1,8-C9
9-D4,7-D1,5-F7,#1 P78 FPGA_UART_CONF_DONE 9-D4,7-D1,5-F7,#1

17-A9,9-F7,7-B4,#2 P60 _CS_WR_FPGA_UART 17-A9,9-F7,7-B4,#2
17-A11,9-F7,#3 P58 _CS_RD_FPGA_UART 17-A11,9-F7,#3

13-C9,9-D11,8-D11 P133 FPGA_CAN_CLK 13-C9,9-D11,8-D9

17-B9,13-G1>2,#3 P47 _SSRAM_BW4 17-B9,13-G1>2,#3
17-A9,13-G1>2,#3 P46 _SSRAM_BW3 17-A9,13-G1>2,#3
13-G1>2,11-E10,#2 P45 _SSRAM_BW2 13-G1>2,11-E10,#2
13-G1>2,11-E10,#2 P44 _SSRAM_BW1 13-G1>2,11-E10,#2

LOCAL_BUS_DATA(31:0) 9-F8>32,7-C4>9,#6

17-G9,13-B6,#6	P86	LOCAL_BUS_DATA(0)	0	
17-G9,13-B6,#6	P85	LOCAL_BUS_DATA(1)	1	
17-G9,13-B6,#6	P83	LOCAL_BUS_DATA(2)	2	
17-G9,13-B6,#6	P75	LOCAL_BUS_DATA(3)	3	
17-G9,13-B6,#6	P74	LOCAL_BUS_DATA(4)	4	
17-G9,13-B6,#6	P73	LOCAL_BUS_DATA(5)	5	
17-G9,13-B6,#6	P71	LOCAL_BUS_DATA(6)	6	
17-G9,13-B6,#6	P70	LOCAL_BUS_DATA(7)	7	
17-G9,13-B6,#2	P69	LOCAL_BUS_DATA(8)	8	
17-G9,13-B6,#2	P68	LOCAL_BUS_DATA(9)	9	
17-G9,13-B6,#2	P67	LOCAL_BUS_DATA(10)	10	
17-G9,13-B6,#2	P65	LOCAL_BUS_DATA(11)	11	
17-G9,13-B6,#2	P64	LOCAL_BUS_DATA(12)	12	
17-G9,13-B6,#2	P63	LOCAL_BUS_DATA(13)	13	
17-G9,13-B6,#2	P62	LOCAL_BUS_DATA(14)	14	
17-G9,13-B6,#2	P61	LOCAL_BUS_DATA(15)	15	
13-B6,9-F8,8-E7	P87	LOCAL_BUS_DATA(16)	16	
13-B6,9-F8,8-E7	P88	LOCAL_BUS_DATA(17)	17	
13-B6,9-F8,8-E7	P89	LOCAL_BUS_DATA(18)	18	
13-B6,9-F8,8-E7	P90	LOCAL_BUS_DATA(19)	19	
13-B6,9-F9,8-E7	P92	LOCAL_BUS_DATA(20)	20	
13-B6,9-F9,8-E7	P93	LOCAL_BUS_DATA(21)	21	
13-B6,9-F9,8-E7	P94	LOCAL_BUS_DATA(22)	22	
13-B6,9-F9,8-E7	P95	LOCAL_BUS_DATA(23)	23	
13-B6,9-F9,8-E7	P96	LOCAL_BUS_DATA(24)	24	
13-B6,9-F9,8-E7	P97	LOCAL_BUS_DATA(25)	25	
13-B6,9-F9,8-E7	P99	LOCAL_BUS_DATA(26)	26	
13-B6,9-F9,8-E7	P100	LOCAL_BUS_DATA(27)	27	
13-B6,9-F9,8-E7	P101	LOCAL_BUS_DATA(28)	28	
13-B6,9-F9,8-E7	P102	LOCAL_BUS_DATA(29)	29	
13-B6,9-F9,8-E7	P103	LOCAL_BUS_DATA(30)	30	
13-B6,9-F9,8-E7	P104	LOCAL_BUS_DATA(31)	31	

17-B9,13-G1>2,#3 P31 _SSRAM_BWE 17-B9,13-G1>2,#3
17-B9,13-F1>2,#3 P36 _SSRAM_ADSP 17-B9,13-F1>2,#3
17-B9,13-F1>2,#3 P37 _SSRAM_ADSC 17-B9,13-F1>2,#3
17-B9,13-F1>2,#3 P38 _SSRAM_ADV 17-B9,13-F1>2,#3
17-B9,13-F1>2,#3 P39 _SSRAM_OE 17-B9,13-F1>2,#3
17-B9,13-C1,#3 P40 _SSRAM1_CS 17-B9,13-C1,#3
17-C9,13-F1,#3 P41 _SSRAM2_CS 17-C9,13-F1,#3
17-C9,12-B8,#2 P55 _NVRAM_CS 17-C9,12-B8,#2
17-C9,9-D11,#2 P136 _ARCNET_CS 17-C9,9-D11,#2
9-D11,5-B1,8-E10 P135 _ARCNET_IRQ 9-D11,5-B1,8-E9
9-D4,4-F3,8-E10 P79 DIR_5V_BUS 9-D4,4-F3,8-E9
9-E4,7-F7,#2 P186 _UART2_IRQC 9-E4,7-F7,#2
9-E11,7-F6,#2 P120 _UART2_IRQB 9-E11,7-F6,#2
9-F7,7-F7,#2 P56 _UART2_IRQA 9-F7,7-F7,#2

9-D4,7-F5,#2 P182 _UART1_IRQD 9-D4,7-F5,#2
9-E11,7-F7,#2 P121 _UART1_IRQC 9-E11,7-F7,#2
9-D11,7-F7,#2 P141 _UART1_IRQB 9-D11,7-F7,#2
9-E11,7-F7,#2 P119 _UART1_IRQA 9-E11,7-F7,#2

9-E11,4-F6,8-F10 P116 _IRQ_CAN3 9-E11,4-F6,8-F9
9-E11,4-C6,8-F10 P115 _IRQ_CAN2 9-E11,4-C6,8-F9
9-F9,4-C1,8-F10 P114 _IRQ_CAN1 9-F9,4-C1,8-F9
17-C9,9-D11,#2 P132 _CAN_DSACK 17-C9,9-D11,#2
9-F9,4-F6,8-F10 P111 _CS_CAN3 9-F9,4-F6,8-F9
9-F9,4-C6,8-F10 P112 _CS_CAN2 9-F9,4-C6,8-F9
17-C9,9-F9,4-C1,#1 P113 _CS_CAN1 17-C9,9-F9,4-C1,#1

17-C9,12-B8,#5 P53 _IO_WR 17-C9,12-B8,#5
17-C9,12-B8,#4 P54 _IO_RD 17-C9,12-B8,#4
17-A9,11-E10,#3 P134 ISO_5V_BUS 17-A9,11-E10,#3

BLOCK PATHNAME $PROJECT_JEDI/heroic/roadrunner_v2d_ASM/roadrunner_v2d

BLOCK SHT 8 OF 18

REV	PCN XXXXXXXX	DESCRIPTION XXXXXXXXXXXXXXXXXXXXXXXXXXXXXXXXXX		MADE	CASTEIGNAU	DATE	12/06/01
MADE BY	NAME	DATE DD/MM/YY	APPR BY NAME DATE DD/MM/YY	CHECK	NAME	DATE	DD/MM/YY
REV	PCN XXXXXXXX	DESCRIPTION XXXXXXXXXXXXXXXXXXXXXXXXXXXXXXXXXX		APPR	NAME	DATE	DD/MM/YY
MADE BY	NAME	DATE DD/MM/YY	APPR BY NAME DATE DD/MM/YY	OTHER	NAME	DATE	DD/MM/YY

GE Medical Systems
BUC - FRANCE

DESIGN TITLE ROADRUNNER V2D
FIRST MADE FOR ZIDANE

DRAWING NO.	REV	SIZE	SHT/CONT. ON
2289661-4SCH	A	3	8 / 18

FRONTAL POSITIONER RACK

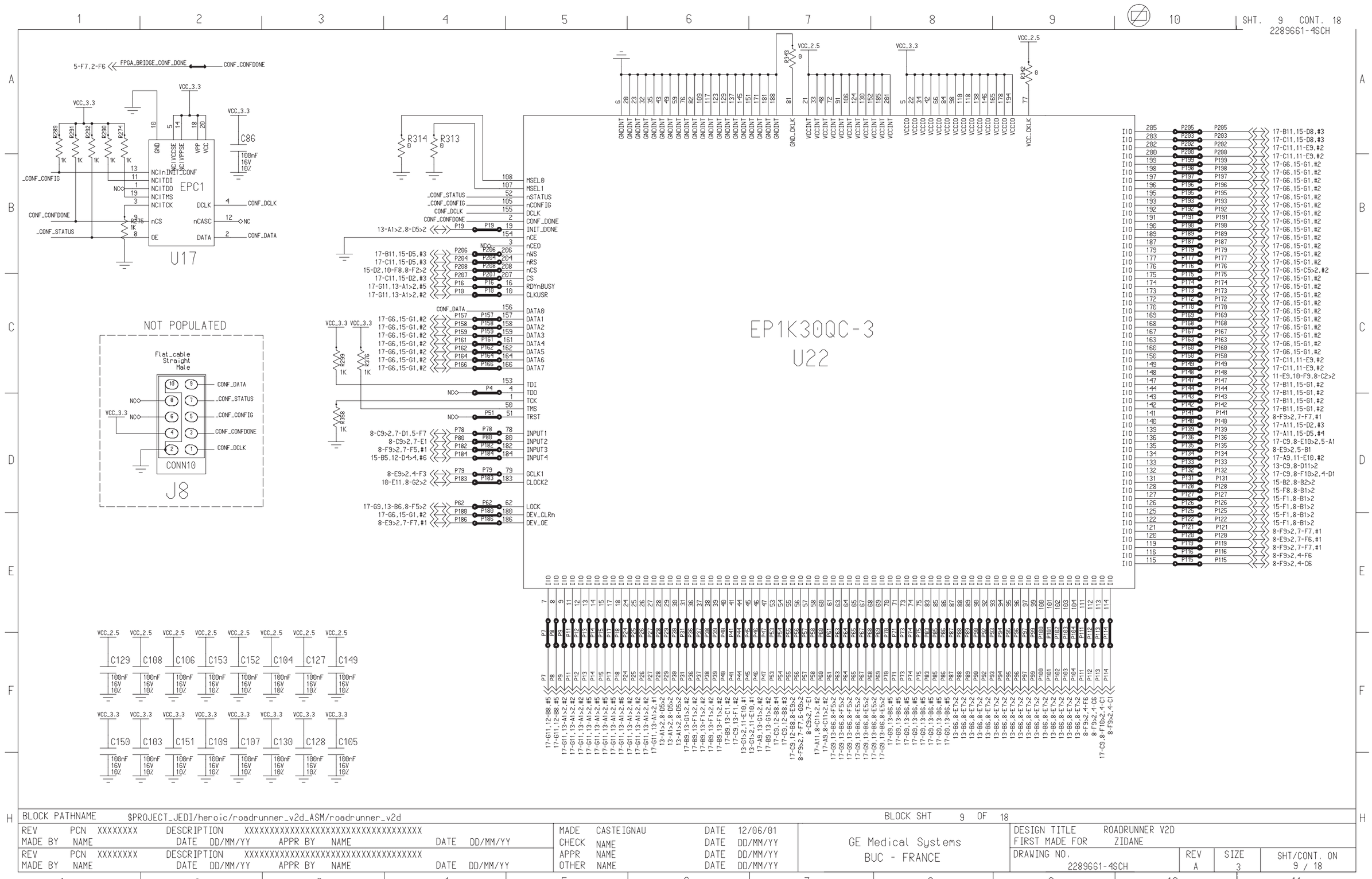

BLOCK PATHNAME	$PROJECT_JEDI/heroic/roadrunner_v2d_ASM/roadrunner_v2d					BLOCK SHT 9 OF 18			
REV PCN XXXXXXXX DESCRIPTION XXXXXXXXXXXXXXXXXXXXXXXXXXXXXXXXXX MADE BY NAME DATE DD/MM/YY APPR BY NAME DATE DD/MM/YY				MADE CASTEIGNAU CHECK NAME APPR NAME OTHER NAME	DATE 12/06/01 DATE DD/MM/YY DATE DD/MM/YY DATE DD/MM/YY	GE Medical Systems BUC - FRANCE	DESIGN TITLE ROADRUNNER V2D FIRST MADE FOR ZIDANE		
REV PCN XXXXXXXX DESCRIPTION XXXXXXXXXXXXXXXXXXXXXXXXXXXXXXXXXX MADE BY NAME DATE DD/MM/YY APPR BY NAME DATE DD/MM/YY							DRAWING NO. 2289661-4SCH	REV A	SIZE 3	SHT/CONT. ON 9 / 18

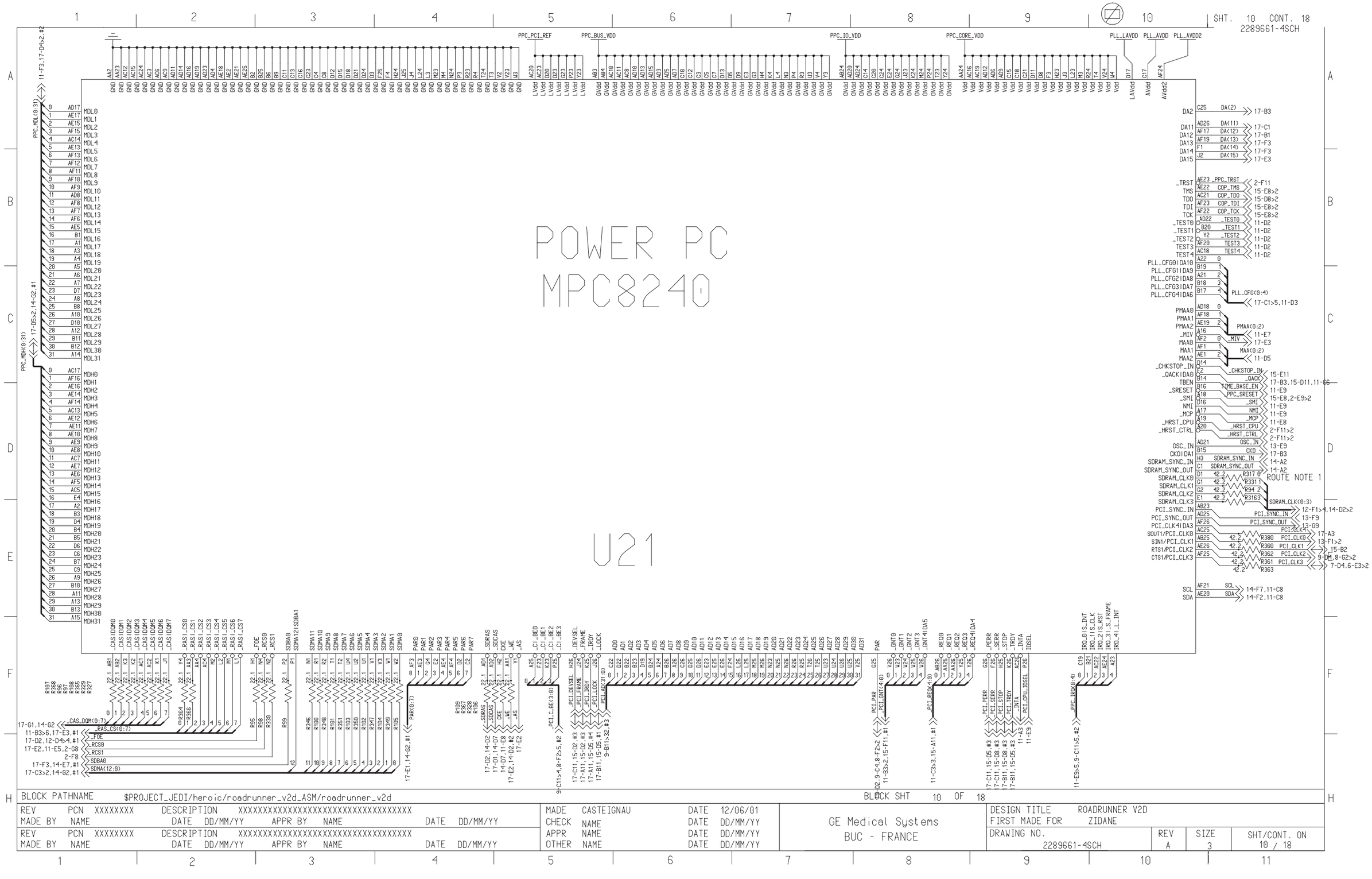

FRONTAL POSITIONER RACK

FRONTAL POSITIONER RACK

SHT. 11 CONT. 18
2289661-4SCH

MPC8240 RESET CONFIGURATION & MISC PULL-UP/DOWN

PPC_PCI_REF
R483 2K
10-F9 >> _INTA

17-E3,10-F1 >> _RAS_CS(2) PP25
17-E3,10-F1 >> _RAS_CS(3) PP26
17-E3,10-F1 >> _RAS_CS(4) PP17
17-E3,10-F1 >> _RAS_CS(5) PP18
17-E3,10-F1 >> _RAS_CS(6) PP16
17-E3,10-F1 >> _RAS_CS(7) PP15

15-F11,10-F8 >> _PCI_GNT(3) PP20

15-A11,10-F8 >> _PCI_REQ(1) PP23
15-A11,10-F8 >> _PCI_REQ(2) PP22
15-A11,10-F8 >> _PCI_REQ(3) PP21

PPC_IO_VDD
PPC_BUS_VDD
R295 10K, R283 10K, R112 10K, R303 10K, R282 121, R281 121
_TEST0 >> 10-B11
_TEST1 >> 10-B11
_TEST2 >> 10-B11
_TEST3 >> 10-B11
TEST4 >> 10-B11

PPC_IO_VDD
SP1 SPARE0603, R32 10K, R33 10K, SP2 SPARE0603 10K, SP3 SPARE0603
0 1 2 4
PLL_CFG(0:4) >> 17-C1>5,10-C1
R271 1K SP19 SPARE0603, SP18 SPARE0603 R270 1K, R269 1K

NOT POPULATED

Reset PLL configuration:
PLL_CFG(0:4) = 01110
PCI / MEM / CPU
33 66 200

NOT POPULATED
PPC_BUS_VDD
R297 1K SP30 SPARE0603
PPC_MDL(0) >> 17-G4,14-G2,#2
_FOE >> 17-D2,12-D4>4,#1
1K SP35 SPARE0603, SP29 SPARE0603

Bank0: 8bits, 2MBytes
Bank1: 64bits, 8MBytes
_FOE = high / DL(0) = high
DL(0) internally pulled-up at reset

PPC_BUS_VDD
Address map B
PCI Arbiter enabled
R111 10K, R110 10K, SP8 SPARE0603
0 1 2
MAA(0:2) >> 10-C11
SP31 SPARE0603, SP22 SPARE0603, R388 1K, SP11 SPARE0603

PPC_BUS_VDD
R395 10K
_RCS0 >> 17-E2,10-G1,2-G8
SP24 SPARE0603

Boot on _RCS0
PCI master
=> MAA(1)=high
_RCS0 = high

PPC_IO_VDD
SP22 SPARE0603
_OACK >> 17-B3,15-D11,#1
R208 1K

PPC_IO_VDD
R277 10K, R276 10K
SDA >> 14-F2,10-E11
SCL >> 14-F7,10-E11

PPC_IO_VDD
SP9 SPARE0603, SP10 SPARE0603, SP11 SPARE0603
0 1 2
PMAA(0:2) >> 10-C11
R287 1K, R286 1K, R284 1K

PPC_IO_VDD
R305 1K
_MCP >> 10-D11
CKE >> 14-D7,10-F5
SP46 SPARE0603, SP28 SPARE0603

_PCI_GNT(4) >> 17-C1,10-F8
SP4 SPARE0603
enable DA(0-15)

PPC_BUS_VDD
R295 1K
_WE >> 17-E2,14-D2,#2

PPC_IO_VDD
R307 10K, R304 10K, R297 10K, R298 10K, R293 10K, R244 10K, R282 10K
TIME_BASE_EN >> 10-D11
SMI >> 10-D11
_PPC_IRQ(0) >> 17-C11,10-F9,#2
_PPC_IRQ(1) >> 17-C11,10-F9,#2
_PPC_IRQ(2) >> 17-C11,10-F9,#2
_PPC_IRQ(3) >> 17-C11,10-F9,#2
_PPC_IRQ(4) >> 10-F9,9-C11,8-C2>2

10-F9 >> PCI_CPU_IDSEL
10-D11 >> NM1
VCC_3.3
R345 2K, R285 2K

VCC_3.3
R411 1K >> _SSRAM2_CS >> 17-C9,13-F1,#2
R403 1K >> _SSRAM1_CS >> 17-B9,13-C1,#2
R408 1K >> _SSRAM_OE >> 17-B9,13-F1>2,#2
R293 1K >> _SSRAM_ADV >> 17-B9,13-F1>2,#2
R377 1K >> _SSRAM_ADSC >> 17-B9,13-F1>2,#2
R278 1K >> _SSRAM_ADSP >> 17-B9,13-F1>2,#2
R279 1K >> _SSRAM_BAE >> 17-B9,13-G1>2,#2
R418 1K >> _SSRAM_BA1 >> 13-G1>2,9-F6,#1
R415 1K >> _SSRAM_BA2 >> 13-G1>2,9-F7,#1
R417 1K >> _SSRAM_BA3 >> 17-A9,13-G1>2,#2
R412 1K >> _SSRAM_BA4 >> 17-B9,13-G1>2,#2
R403 1K >> _IO_WR >> 17-C9,12-B8,#4
R402 1K >> _IO_RD >> 17-C9,12-B8,#3
R425 1K >> ISO_5V_BUS >> 17-A9,9-D11,#2

PPC_PCI_REF
R295 2K >> _PCI_DEVSEL >> 17-C11,15-D2,#3
R254 2K >> _PCI_STOP >> 17-B11,15-D5,#3
R260 2K >> _PCI_PERR >> 17-C11,15-D5,#3
R253 2K >> _PCI_SERR >> 17-C11,15-D5,#3
R296 2K >> _PCI_FRAME >> 17-C11,15-D5,#3
R262 2K >> _PCI_IRDY >> 17-A11,15-D2,#3
R261 2K >> _PCI_TRDY >> 17-A11,15-D5,#3
R324 2K >> _PCI_LOCK >> 17-B11,15-D5,10-F5

BLOCK PATHNAME $PROJECT_JEDI/heroic/roadrunner_v2d_ASM/roadrunner_v2d										BLOCK SHT 11 OF 18		
REV PCN XXXXXXXX DESCRIPTION XXXXXXXXXXXXXXXXXXXXXXXXXXXXXXXXXX MADE BY NAME DATE DD/MM/YY APPR BY NAME DATE DD/MM/YY				MADE CASTEIGNAU DATE 12/06/01 CHECK NAME DATE DD/MM/YY APPR NAME DATE DD/MM/YY OTHER NAME DATE DD/MM/YY		GE Medical Systems BUC - FRANCE		DESIGN TITLE ROADRUNNER V2D FIRST MADE FOR ZIDANE				
REV PCN XXXXXXXX DESCRIPTION XXXXXXXXXXXXXXXXXXXXXXXXXXXXXXXXXX MADE BY NAME DATE DD/MM/YY APPR BY NAME DATE DD/MM/YY								DRAWING NO. 2289661-4SCH		REV A	SIZE 3	SHT/CONT. ON 11 / 18

FLASH

64 bits appli flash (8 MBytes)

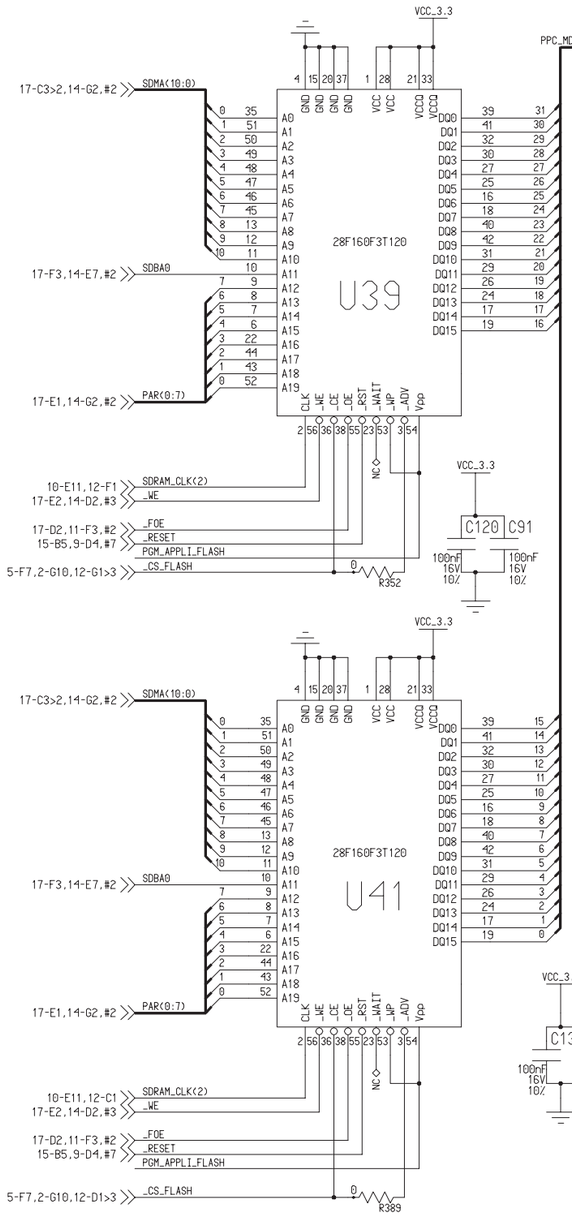

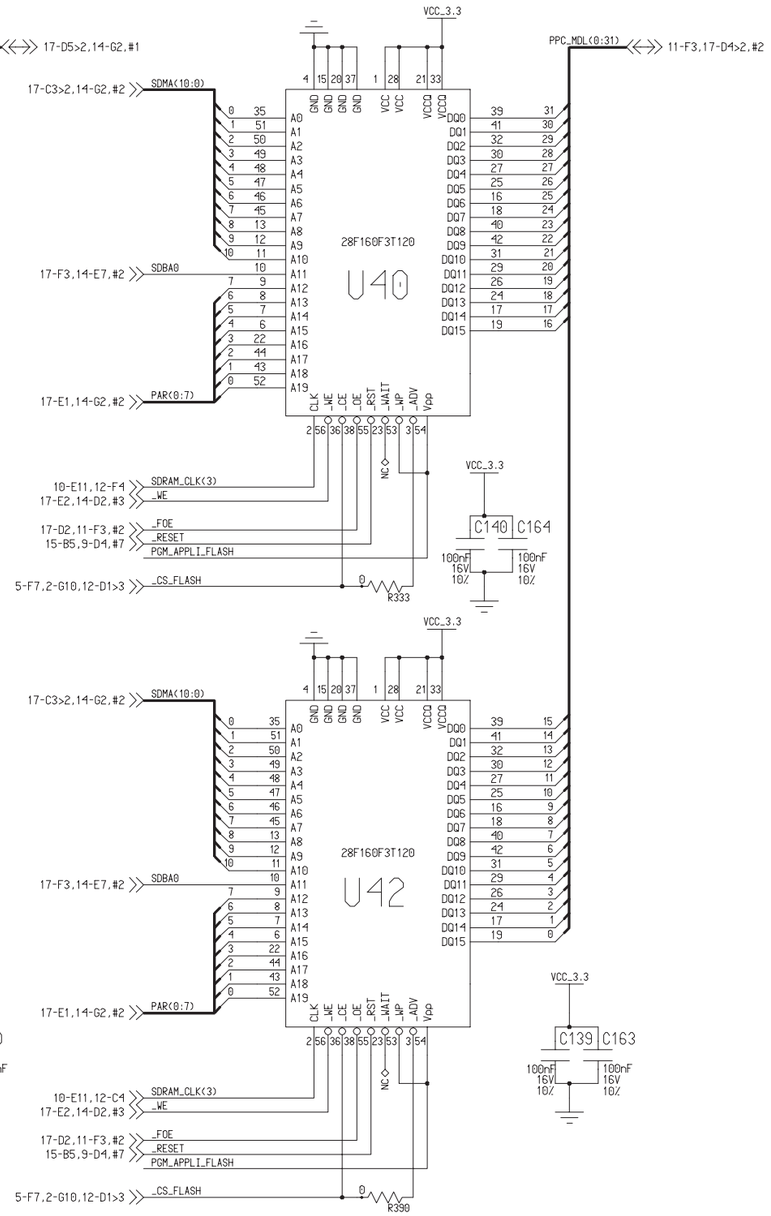

NVRAM

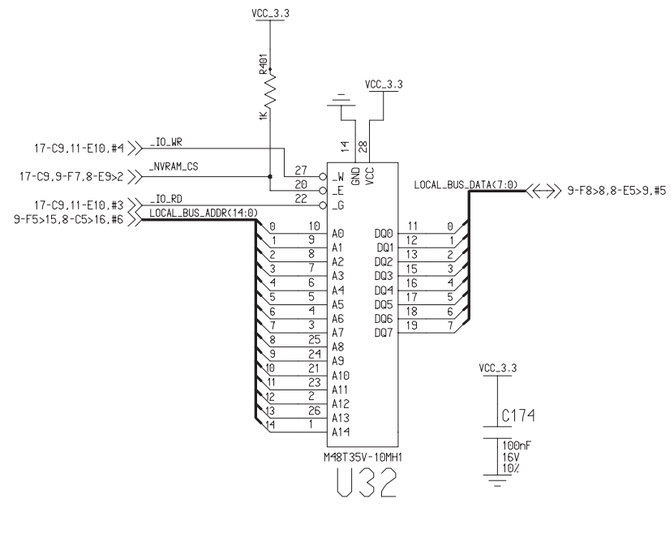

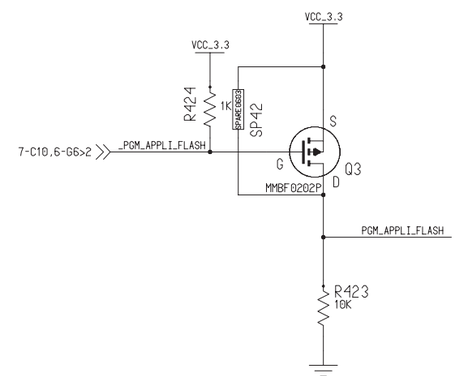

BLOCK PATHNAME $PROJECT_JEDI/heroic/roadrunner_v2d_ASM/roadrunner_v2d								BLOCK SHT 12 OF 18			
REV PCN XXXXXXXX DESCRIPTION XXXXXXXXXXXXXXXXXXXXXXXXXXXXXXXXXX MADE BY NAME DATE DD/MM/YY APPR BY NAME DATE DD/MM/YY				MADE CASTEIGNAU DATE 12/06/01 CHECK NAME DATE DD/MM/YY APPR NAME DATE DD/MM/YY OTHER NAME DATE DD/MM/YY		GE Medical Systems BUC - FRANCE		DESIGN TITLE ROADRUNNER V2D FIRST MADE FOR ZIDANE			
REV PCN XXXXXXXX DESCRIPTION XXXXXXXXXXXXXXXXXXXXXXXXXXXXXXXXXX MADE BY NAME DATE DD/MM/YY APPR BY NAME DATE DD/MM/YY								DRAWING NO. 2289661-4SCH	REV A	SIZE 3	SHT/CONT. ON 12 / 18

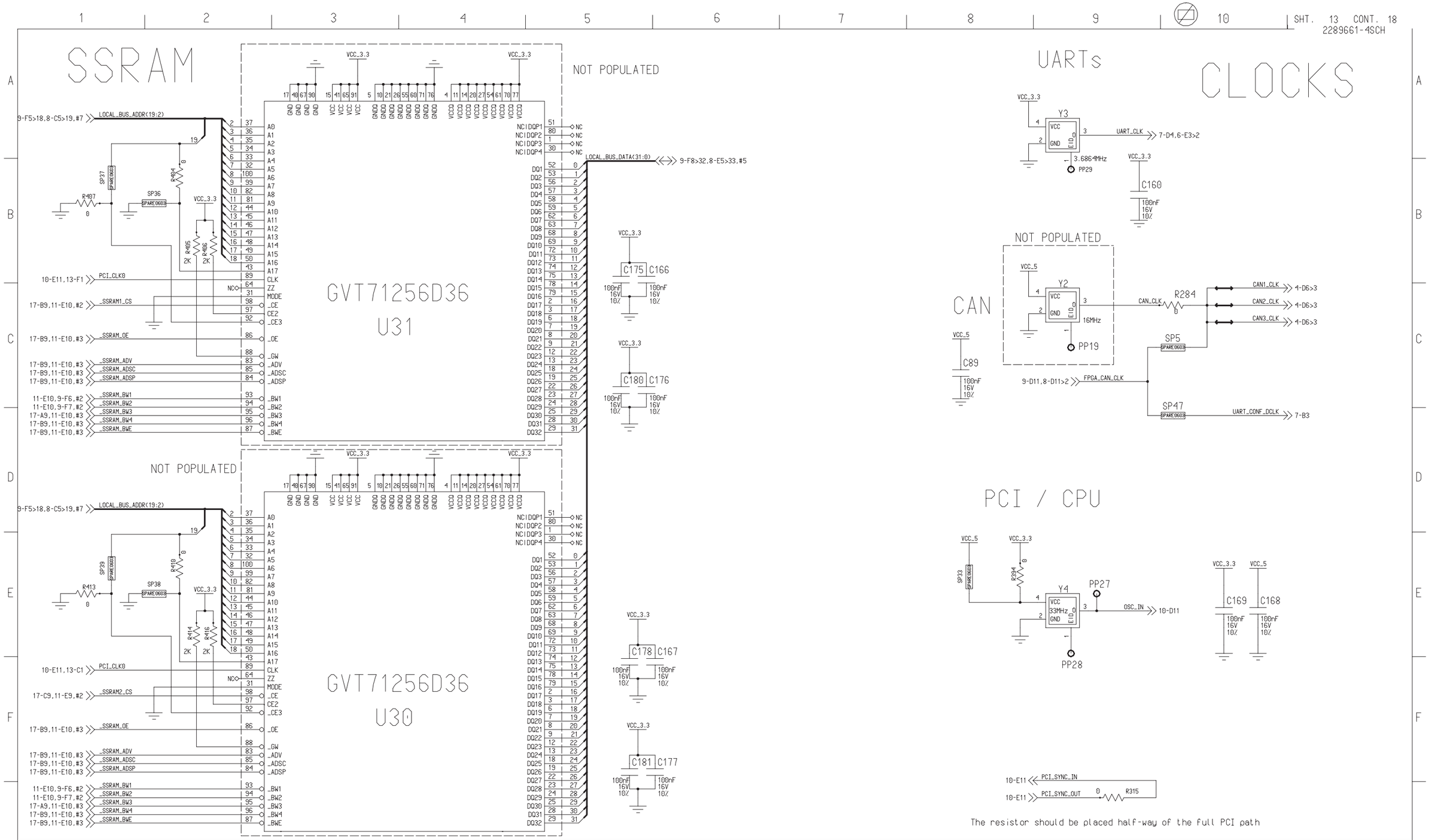

BLOCK PATHNAME $PROJECT_JEDI/heroic/roadrunner_v2d_ASM/roadrunner_v2d				BLOCK SHT 13 OF 18	
REV PCN XXXXXXXX DESCRIPTION XXXXXXXXXXXXXXXXXXXXXXXXXXXXXXXXXX MADE BY NAME DATE DD/MM/YY APPR BY NAME DATE DD/MM/YY	MADE CASTEIGNAU DATE 12/06/01 CHECK NAME DATE DD/MM/YY APPR NAME DATE DD/MM/YY OTHER NAME DATE DD/MM/YY	GE Medical Systems BUC - FRANCE	DESIGN TITLE ROADRUNNER V2D FIRST MADE FOR ZIDANE		
REV PCN XXXXXXXX DESCRIPTION XXXXXXXXXXXXXXXXXXXXXXXXXXXXXXXXXX MADE BY NAME DATE DD/MM/YY APPR BY NAME DATE DD/MM/YY			DRAWING NO. 2289661-4SCH	REV A	SIZE 3	SHT/CONT. ON 13 / 18

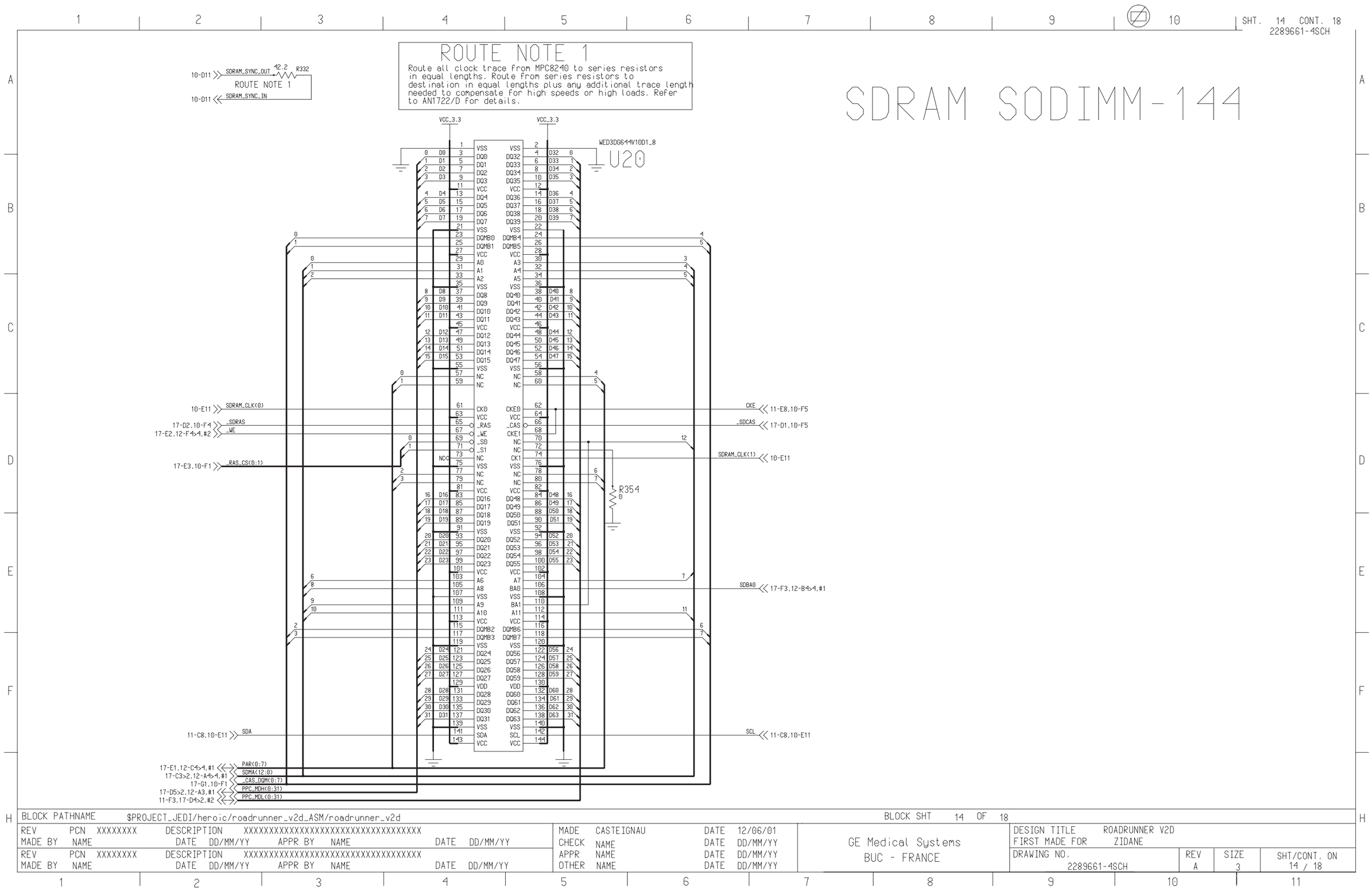
SHT. 14 CONT. 18
2289661-4SCH
SDRAM SODIMM-144
ROUTE NOTE 1
Route all clock trace from MPC8240 to series resistors in equal lengths. Route from series resistors to destination in equal lengths plus any additional trace length needed to compensate for high speeds or high loads. Refer to AN1722/D for details.
ROUTE NOTE 1
SDRAM_SYNC_OUT
SDRAM_SYNC_IN
42.2
R332
WED3DG644V10D1_8
U20
VCC_3.3
R354
0
SDRAM_CLK(0)
_SDRAS
_WE
_RAS_CS(0:1)
SDRAM_CLK(1)
_SDCAS
CKE
SDBA0
SDA
SCL
PAR(0:7)
SDMA(12:0)
_CAS_DQM(0:7)
PPC_MDH(0:31)
PPC_MDL(0:31)
BLOCK PATHNAME $PROJECT_JEDI/heroic/roadrunner_v2d_ASM/roadrunner_v2d
BLOCK SHT 14 OF 18
MADE CASTEIGNAU DATE 12/06/01
CHECK NAME DATE DD/MM/YY
APPR NAME DATE DD/MM/YY
OTHER NAME DATE DD/MM/YY
GE Medical Systems
BUC - FRANCE
DESIGN TITLE ROADRUNNER V2D
FIRST MADE FOR ZIDANE
DRAWING NO. 2289661-4SCH
REV A
SIZE 3
SHT/CONT. ON 14 / 18

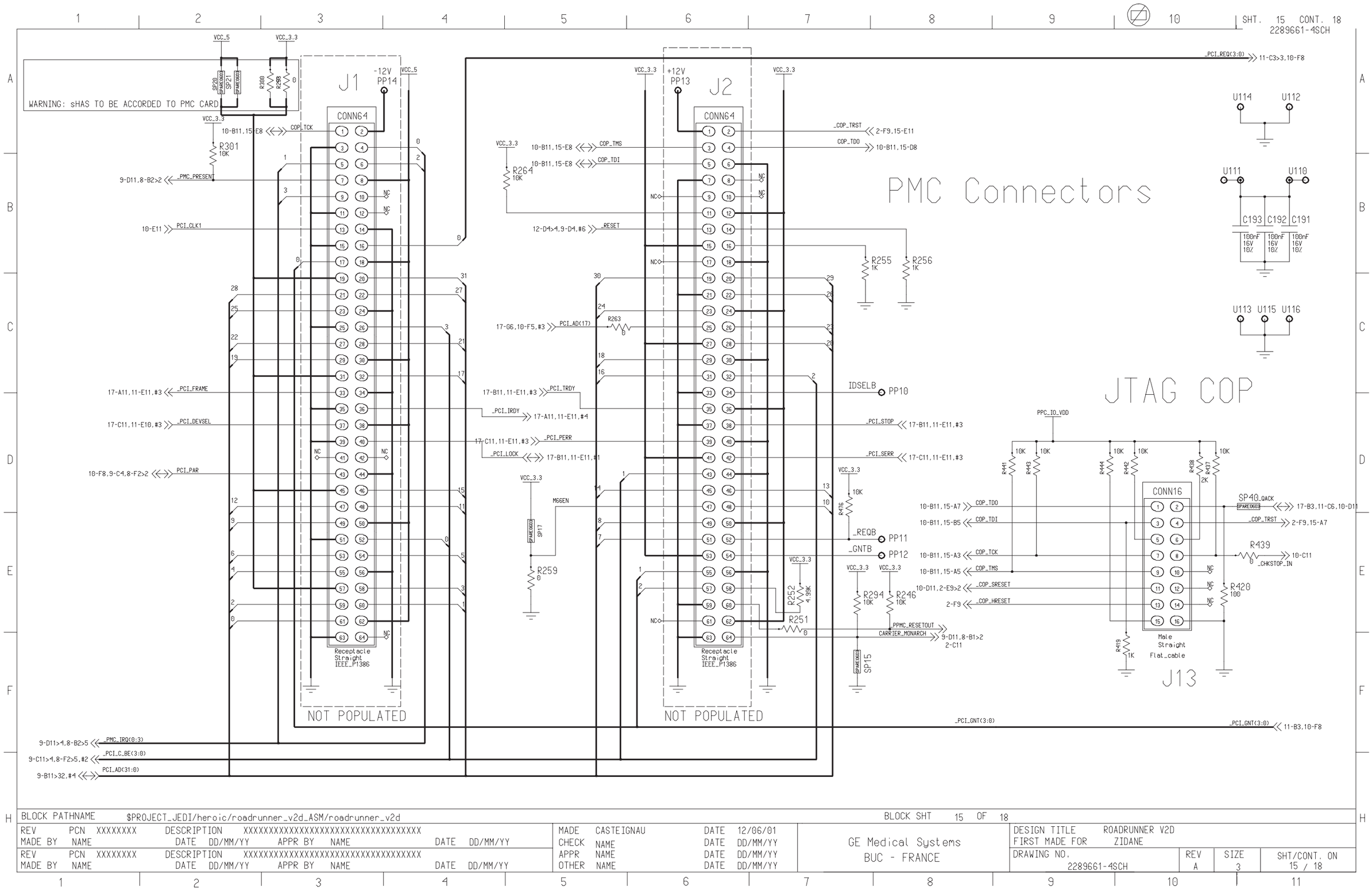
SHT. 15 CONT. 18
2289661-4SCH
WARNING: sHAS TO BE ACCORDED TO PMC CARD
J1
J2
CONN64
PMC Connectors
JTAG COP
CONN16
J13
Male Straight Flat_cable
Receptacle Straight IEEE_P1386
NOT POPULATED
NOT POPULATED
BLOCK PATHNAME $PROJECT_JEDI/heroic/roadrunner_v2d_ASM/roadrunner_v2d
BLOCK SHT 15 OF 18
REV PCN XXXXXXXX DESCRIPTION XXXXXXXXXXXXXXXXXXXXXXXXXXXXXXXXXXXX
MADE BY NAME DATE DD/MM/YY APPR BY NAME DATE DD/MM/YY
REV PCN XXXXXXXX DESCRIPTION XXXXXXXXXXXXXXXXXXXXXXXXXXXXXXXXXXXX
MADE BY NAME DATE DD/MM/YY APPR BY NAME DATE DD/MM/YY
MADE CASTEIGNAU DATE 12/06/01
CHECK NAME DATE DD/MM/YY
APPR NAME DATE DD/MM/YY
OTHER NAME DATE DD/MM/YY
GE Medical Systems
BUC - FRANCE
DESIGN TITLE ROADRUNNER V2D
FIRST MADE FOR ZIDANE
DRAWING NO. 2289661-4SCH
REV A
SIZE 3
SHT/CONT. ON 15 / 18

SHT. 16 CONT. 18
2289661-4SCH

POWER SUPPLIES

+2.5V

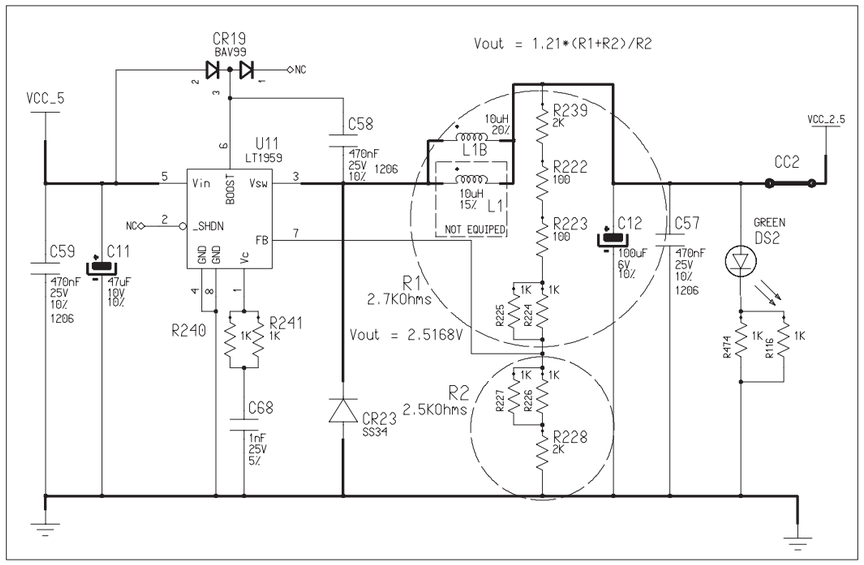

+3.3V

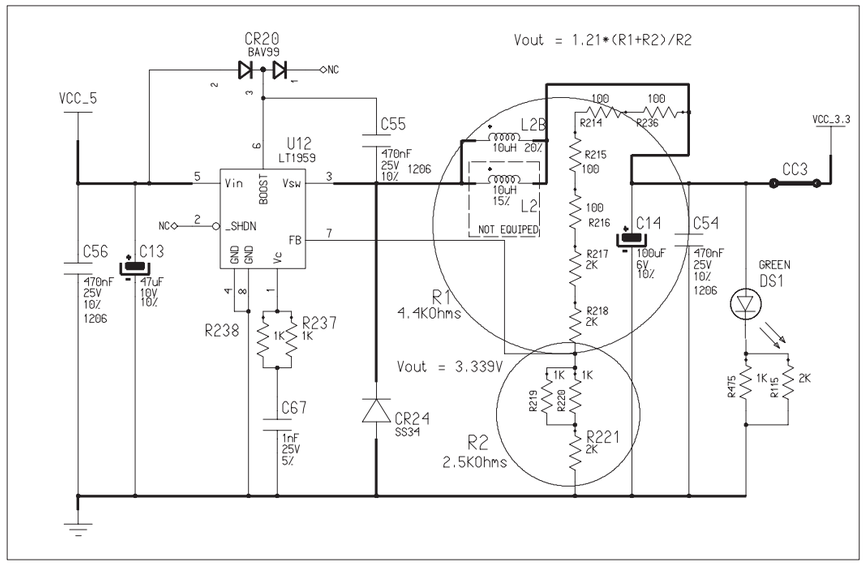

8240 DECOUPLING AND PS PROTECTION

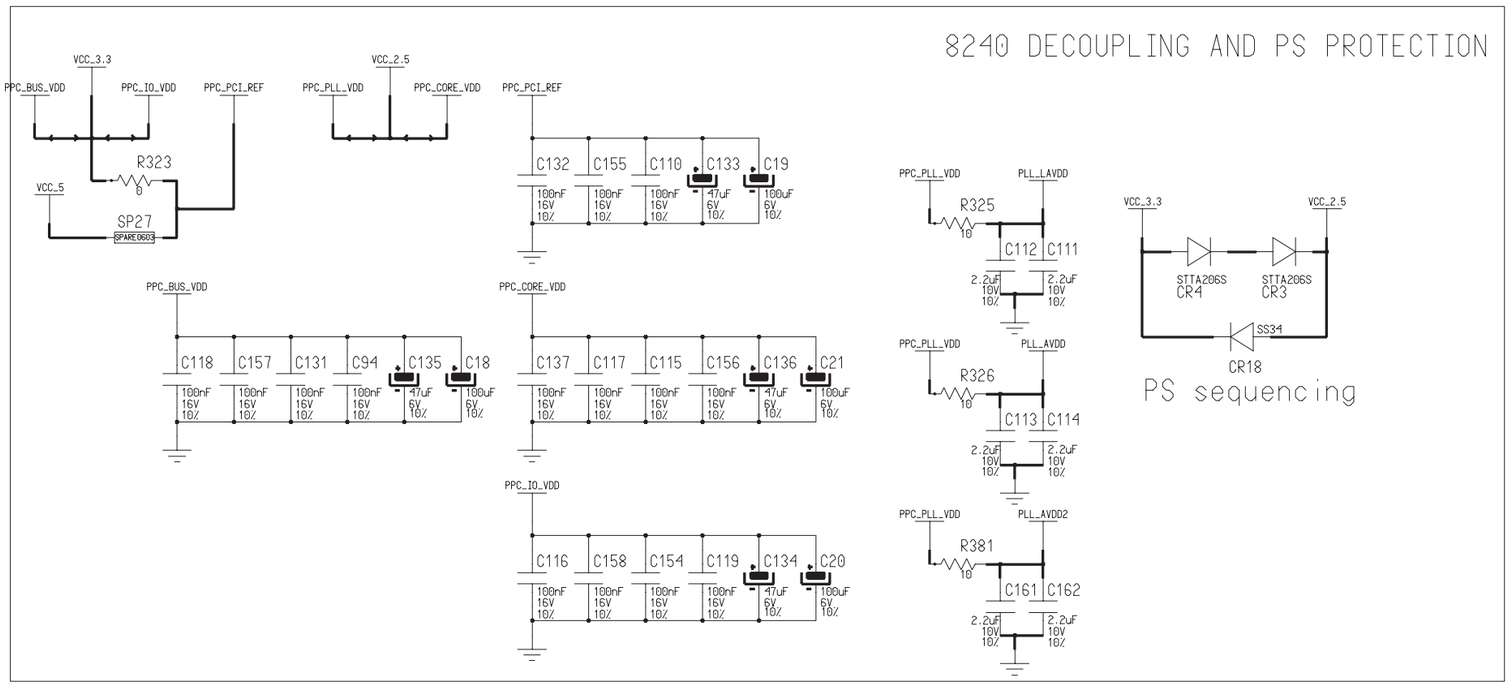

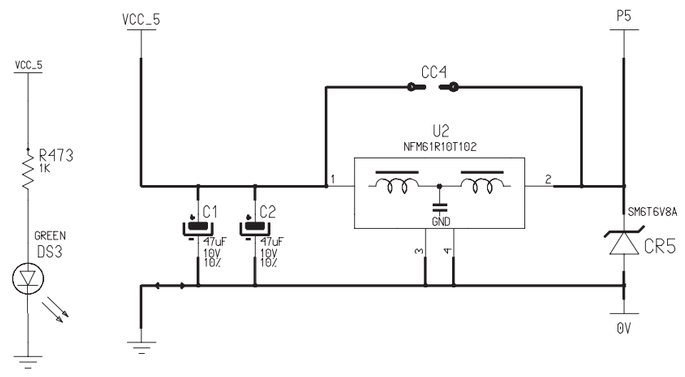

BLOCK PATHNAME $PROJECT_JEDI/heroic/roadrunner_v2d_ASM/roadrunner_v2d							BLOCK SHT 16 OF 18				
REV PCN XXXXXXXX DESCRIPTION XXXXXXXXXXXXXXXXXXXXXXXXXXXXXXXXXX MADE BY NAME DATE DD/MM/YY APPR BY NAME DATE DD/MM/YY			MADE CASTEIGNAU CHECK NAME APPR NAME OTHER NAME	DATE 12/06/01 DATE DD/MM/YY DATE DD/MM/YY DATE DD/MM/YY	GE Medical Systems BUC - FRANCE		DESIGN TITLE ROADRUNNER V2D FIRST MADE FOR ZIDANE				
REV PCN XXXXXXXX DESCRIPTION XXXXXXXXXXXXXXXXXXXXXXXXXXXXXXXXXX MADE BY NAME DATE DD/MM/YY APPR BY NAME DATE DD/MM/YY							DRAWING NO. 2289661-4SCH	REV A	SIZE 3	SHT/CONT. ON 16 / 18	

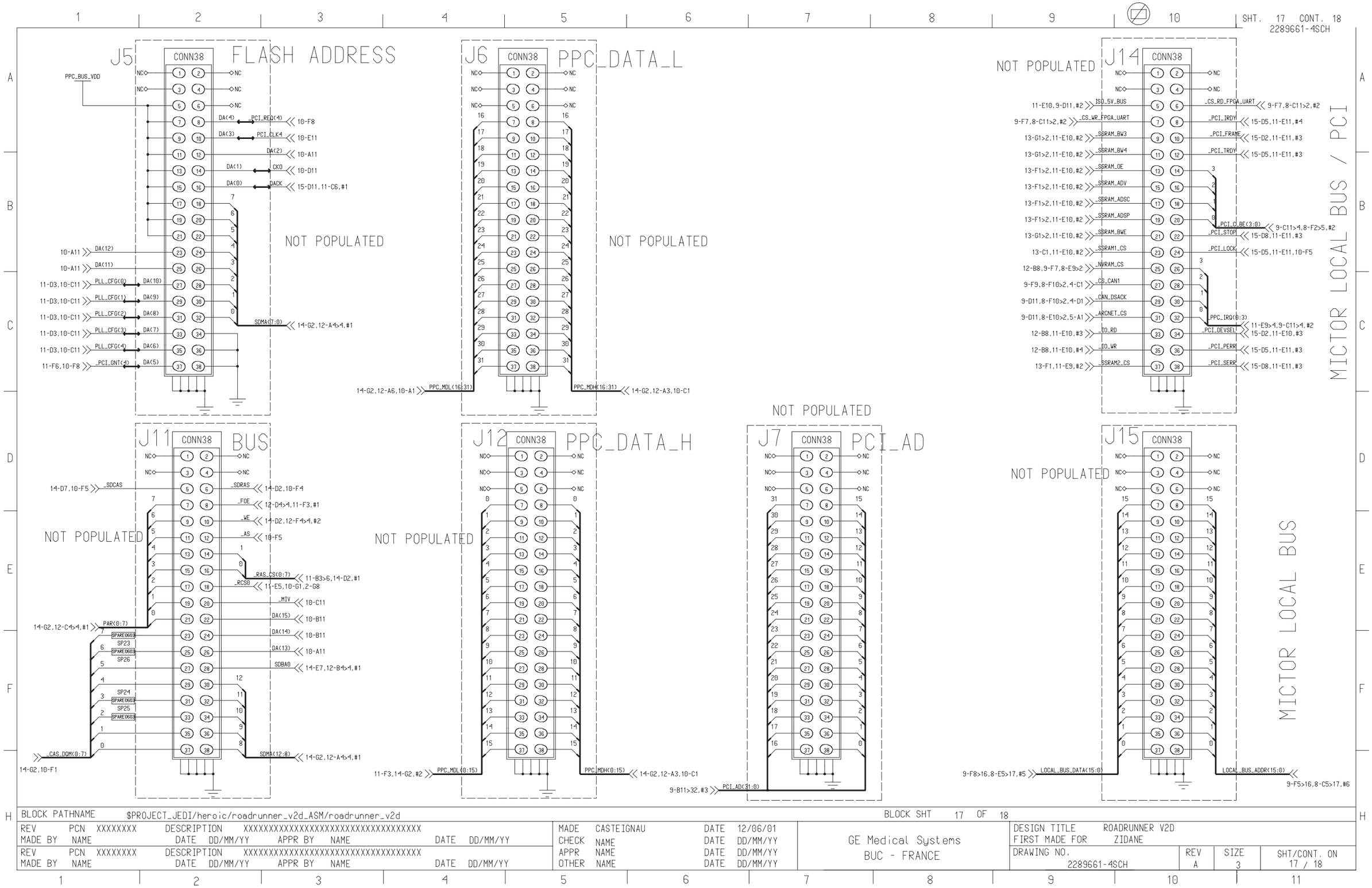
SHT. 17 CONT. 18
2289661-4SCH
J5 CONN38 FLASH ADDRESS
PPC_BUS_VDD
NOT POPULATED
J6 CONN38 PPC_DATA_L
NOT POPULATED
NOT POPULATED
J14 CONN38
MICTOR LOCAL BUS / PCI
J11 CONN38 BUS
NOT POPULATED
J12 CONN38 PPC_DATA_H
NOT POPULATED
NOT POPULATED
J7 CONN38 PCI_AD
J15 CONN38
NOT POPULATED
MICTOR LOCAL BUS
BLOCK PATHNAME $PROJECT_JEDI/heroic/roadrunner_v2d_ASM/roadrunner_v2d
BLOCK SHT 17 OF 18
GE Medical Systems
BUC - FRANCE
DESIGN TITLE ROADRUNNER V2D
FIRST MADE FOR ZIDANE
DRAWING NO. 2289661-4SCH
REV A
SIZE 3
SHT/CONT. ON 17 / 18

SHT. 18 CONT. 18
2289661-4SCH

REMARKS SHEET

Defaults for non-indicated values on passive components:

Default resistor/capacitor geometries: 0603

Resistors: Tolerance: 1%

Power: 0.063W

BLOCK PATHNAME $PROJECT_JEDI/heroic/roadrunner_v2d_ASM/roadrunner_v2d					BLOCK SHT 18 OF 18	
REV PCN XXXXXXXX DESCRIPTION XXXXXXXXXXXXXXXXXXXXXXXXXXXXXXXXX MADE BY NAME DATE DD/MM/YY APPR BY NAME DATE DD/MM/YY	MADE CASTEIGNAU DATE 12/06/01 CHECK NAME DATE DD/MM/YY APPR NAME DATE DD/MM/YY OTHER NAME DATE DD/MM/YY	GE Medical Systems BUC - FRANCE	DESIGN TITLE ROADRUNNER V2D FIRST MADE FOR ZIDANE			
REV PCN XXXXXXXX DESCRIPTION XXXXXXXXXXXXXXXXXXXXXXXXXXXXXXXXX MADE BY NAME DATE DD/MM/YY APPR BY NAME DATE DD/MM/YY			DRAWING NO. 2289661-4SCH	REV A	SIZE 3	SHT/CONT. ON 18 / 18

Blank page.

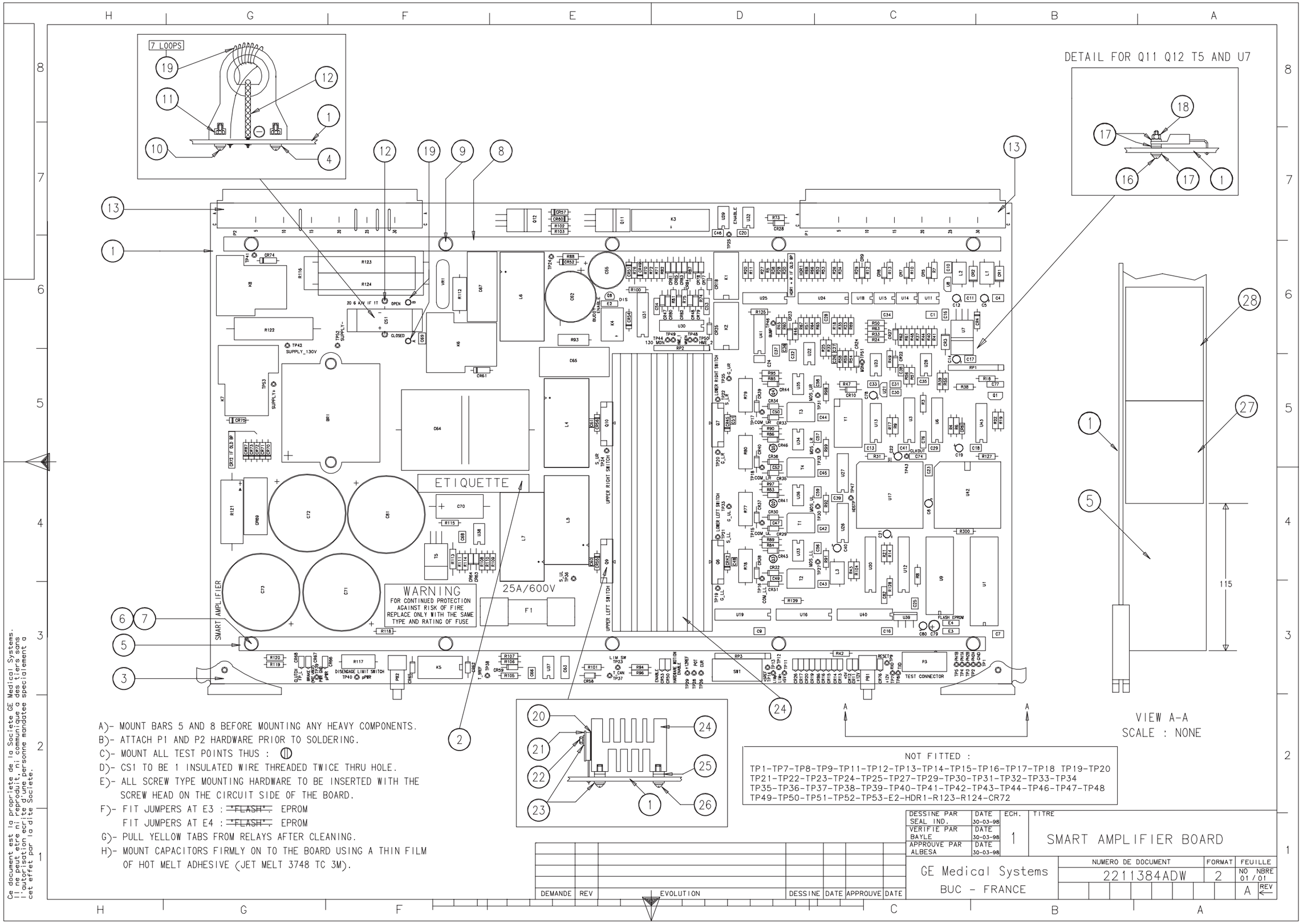

FRONTAL POSITIONER RACK

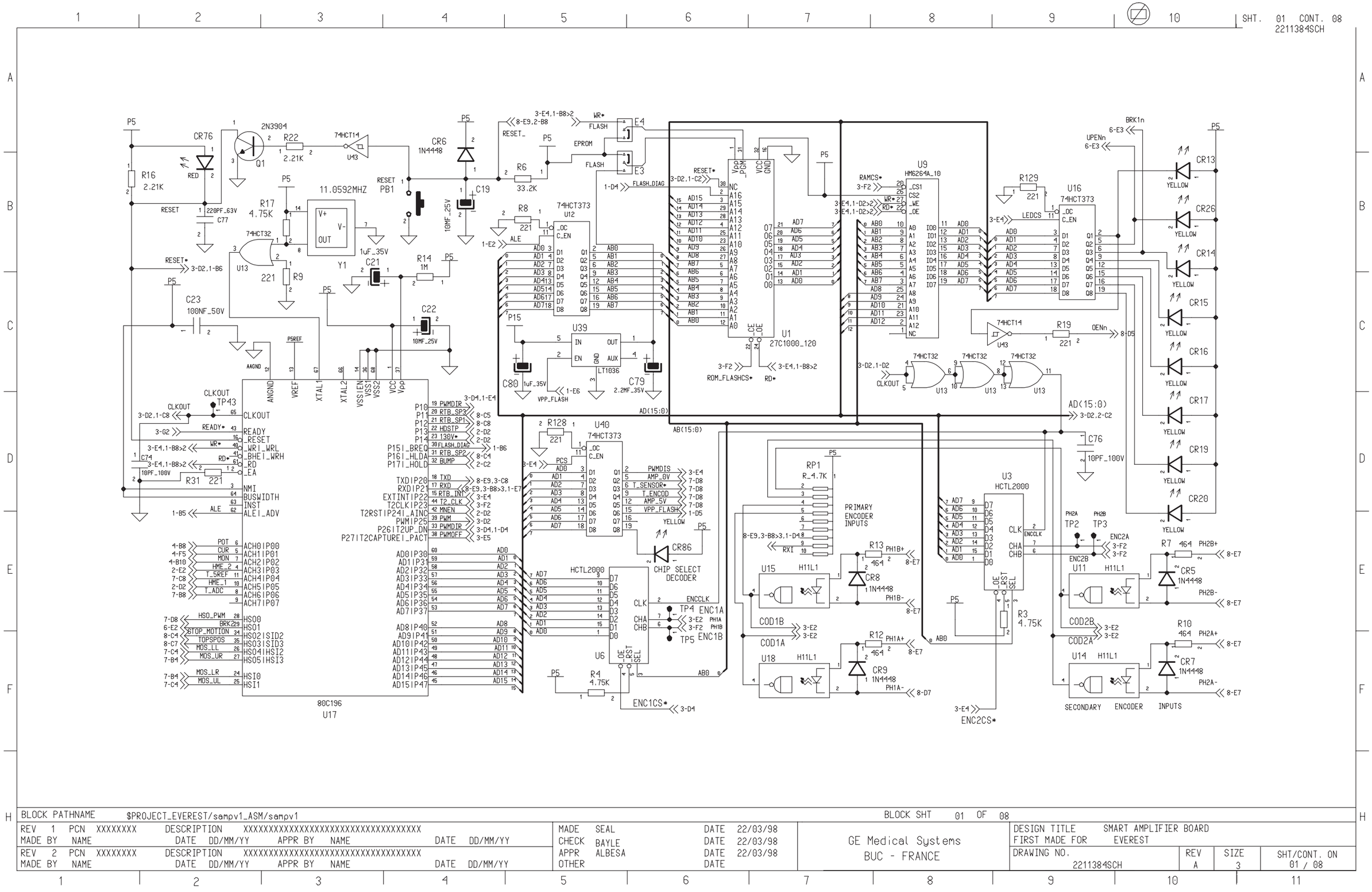
SHT. 01 CONT. 08
2211384SCH
P5
CR76
2N3904
Q1
R22
2.21K
74HCT14
U43
CR6
1N4448
R16
2.21K
RED
RESET
PB1
11.0592MHZ
R17
4.75K
220PF_63V
C77
74HCT32
U13
221
R9
V+
V-
OUT
1uF_35V
Y1
C21
R14
1M
C23
100NF_50V
C22
10MF_25V
10MF_25V
C19
R6
33.2K
RESET_
EPROM
FLASH
E4
E3
FLASH_DIAG
R8
221
ALE
74HCT373
U12
_OC
C_EN
P15
U39
IN
OUT
EN
GND
AUX
LT1036
C80
1uF_35V
C79
2.2MF_35V
VPP_FLASH
U1
27C1000_120
ROM_FLASHCS*
RD*
RESET*
WR*
RAMCS*
U9
HM6264A_10
_CS1
CS2
_WE
_OE
R129
221
LEDCS
U16
74HCT373
R19
221
OENn
74HCT14
U43
74HCT32
U13
CLKOUT
AD(15:0)
AB(15:0)
CR13
CR26
CR14
CR15
CR16
CR17
CR19
CR20
YELLOW
BRK1n
UPENn
C76
10PF_100V
CLKOUT
TP43
READY
_RESET
_WRI_WRL
_BHEI_WRH
_RD
_EA
NMI
BUSWIDTH
INST
ALEI_ADV
R31
221
C74
10PF_100V
80C196
U17
ANGND
VREF
XTAL1
XTAL2
VSSIEN
VSS1
VSS2
VCC
Vpp
PSREF
AAGND
R128
221
U40
74HCT373
PCS
PWMDIS
AMP_0V
T_SENSOR*
T_ENCOD
AMP_5V
VPP_FLASH
CR86
CHIP SELECT
DECODER
HCTL2000
U6
ENCCLK
TP4 ENC1A
TP5 ENC1B
R4
4.75K
ENC1CS*
U3
HCTL2000
ENC2CS*
RP1
R_4.7K
PRIMARY
ENCODER
INPUTS
R13
464
CR8
1N4448
PH1B+
PH1B-
R12
464
CR9
1N4448
PH1A+
PH1A-
U15
H11L1
U18
H11L1
COD1B
COD1A
R3
4.75K
TP2
TP3
ENC2A
ENC2B
U11
H11L1
U14
H11L1
COD2B
COD2A
R7
464
CR5
1N4448
PH2B+
PH2B-
R10
464
CR7
1N4448
PH2A+
PH2A-
SECONDARY
ENCODER
INPUTS
P10 19 PWMDIR
P11 20 RTB_SP3
P12 21 RTB_SP1
P13 22 HDSTP
P14 23 130V*
38 FLASH_DIAG
P15 31 RTB_SP2
P16 32 BUMP
TXD 18 TXD
RXD 17 RXD
EXTINT 15 RTB_INT
T2CLK 44 T2_CLK
T2RST 42 MNEN
PWM 39 PWM
P26 33 PWMDIR
P27 38 PWMOFF
AD0 59 AD1 58 AD2 57 AD3 56 AD4 55 AD5 54 AD6 53 AD7
AD8 52 AD9 51 AD10 50 AD11 49 AD12 48 AD13 47 AD14 46 AD15 45
POT 6
CUR 5
MON 7
HME_2 4
T_5REF 11
HME_1 10
T_ADC 8
ACH0 ACH1 ACH2 ACH3 ACH4 ACH5 ACH6 ACH7
HSO_PWM 28
BRK 29
STOP_MOTION 34
TOPSPOS 35
MOS_LL 26
MOS_UR 27
MOS_LR 24
MOS_UL 25
HSO0 HSO1 HSO2 HSO3 HSO4 HSI0 HSI1
BLOCK PATHNAME $PROJECT_EVEREST/sampv1_ASM/sampv1
BLOCK SHT 01 OF 08
REV 1 PCN XXXXXXXX DESCRIPTION XXXXXXXXXXXXXXXXXXXXXXXXXXXXXXXXXX
MADE BY NAME DATE DD/MM/YY APPR BY NAME DATE DD/MM/YY
REV 2 PCN XXXXXXXX DESCRIPTION XXXXXXXXXXXXXXXXXXXXXXXXXXXXXXXXXX
MADE BY NAME DATE DD/MM/YY APPR BY NAME DATE DD/MM/YY
MADE SEAL DATE 22/03/98
CHECK BAYLE DATE 22/03/98
APPR ALBESA DATE 22/03/98
OTHER DATE
GE Medical Systems
BUC - FRANCE
DESIGN TITLE SMART AMPLIFIER BOARD
FIRST MADE FOR EVEREST
DRAWING NO. 2211384SCH
REV A
SIZE 3
SHT/CONT. ON 01 / 08

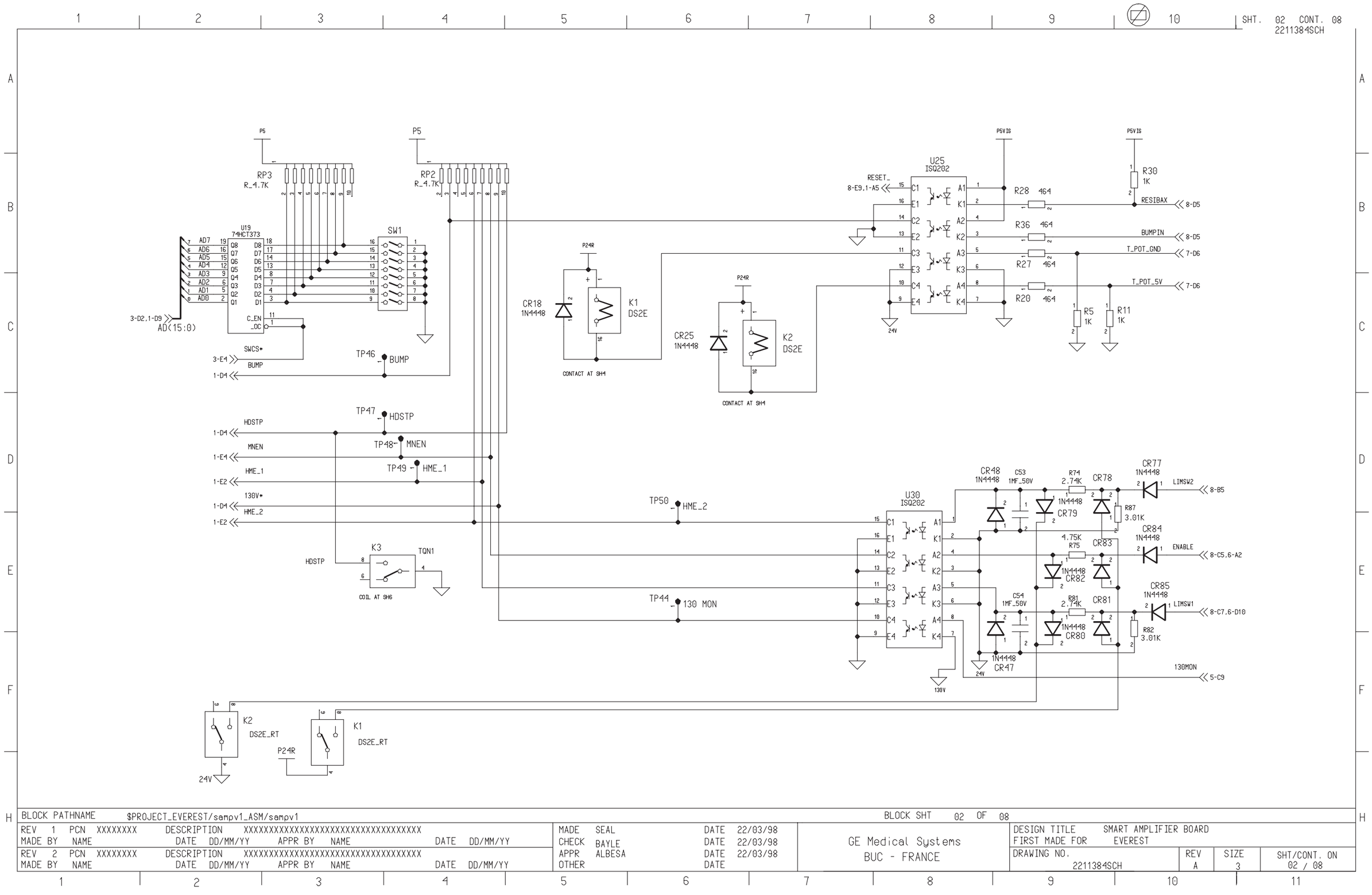

BLOCK PATHNAME $PROJECT_EVEREST/sampv1_ASM/sampv1			BLOCK SHT 02 OF 08
REV 1 PCN XXXXXXXX DESCRIPTION XXXXXXXXXXXXXXXXXXXXXXXXXXXXXXXXXX MADE BY NAME DATE DD/MM/YY APPR BY NAME DATE DD/MM/YY	MADE SEAL DATE 22/03/98 CHECK BAYLE DATE 22/03/98 APPR ALBESA DATE 22/03/98 OTHER DATE	GE Medical Systems BUC - FRANCE	DESIGN TITLE SMART AMPLIFIER BOARD FIRST MADE FOR EVEREST DRAWING NO. 2211384SCH / REV A / SIZE 3 / SHT/CONT. ON 02 / 08
REV 2 PCN XXXXXXXX DESCRIPTION XXXXXXXXXXXXXXXXXXXXXXXXXXXXXXXXXX MADE BY NAME DATE DD/MM/YY APPR BY NAME DATE DD/MM/YY			

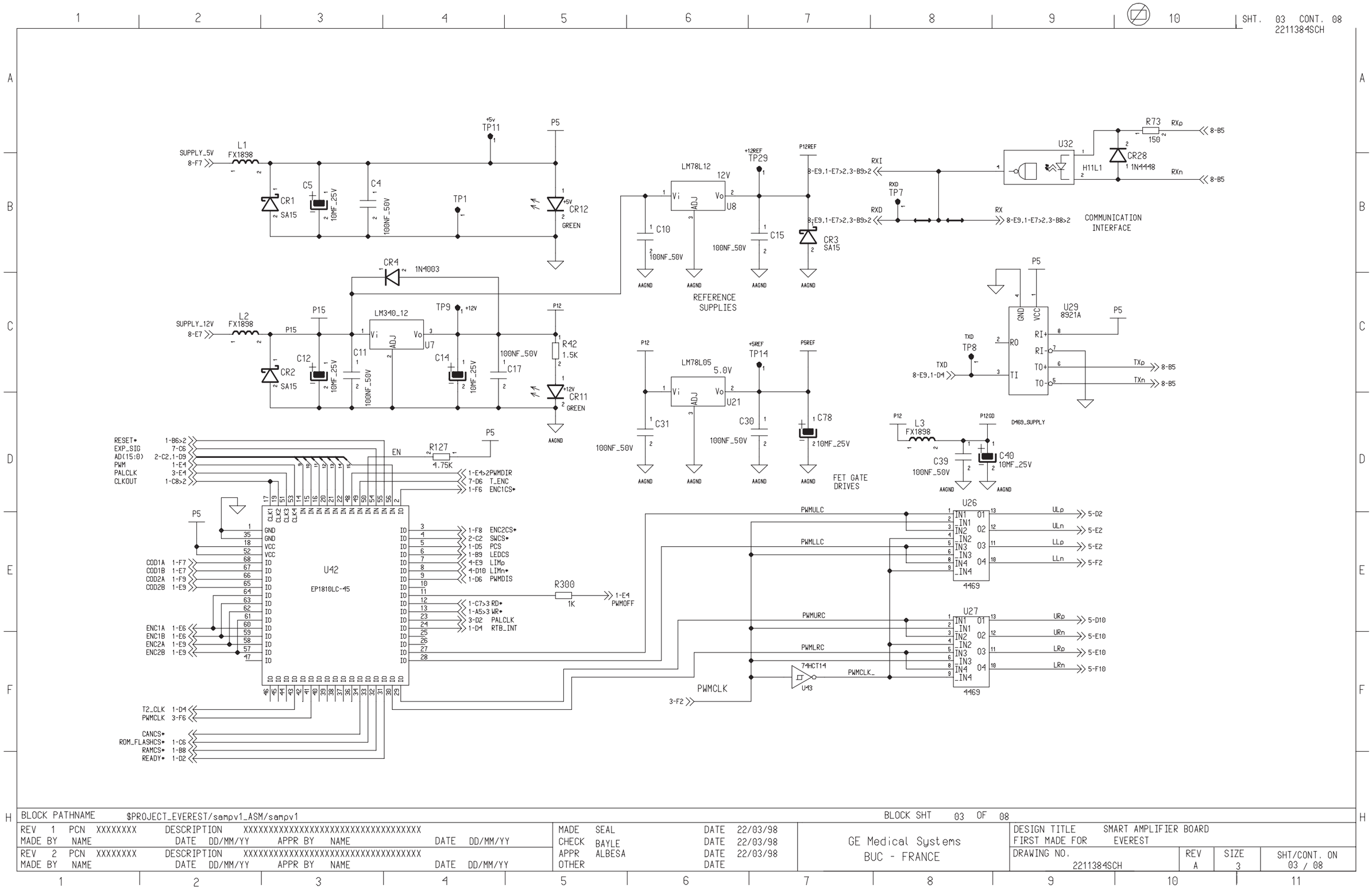

BLOCK PATHNAME	$PROJECT_EVEREST/sampv1_ASM/sampv1						BLOCK SHT 03 OF 08			
REV 1 PCN XXXXXXXX DESCRIPTION XXXXXXXXXXXXXXXXXXXXXXXXXXXXXXXXXX MADE BY NAME DATE DD/MM/YY APPR BY NAME DATE DD/MM/YY				MADE SEAL DATE 22/03/98 CHECK BAYLE DATE 22/03/98 APPR ALBESA DATE 22/03/98 OTHER DATE	GE Medical Systems BUC - FRANCE		DESIGN TITLE SMART AMPLIFIER BOARD FIRST MADE FOR EVEREST			
REV 2 PCN XXXXXXXX DESCRIPTION XXXXXXXXXXXXXXXXXXXXXXXXXXXXXXXXXX MADE BY NAME DATE DD/MM/YY APPR BY NAME DATE DD/MM/YY							DRAWING NO. 2211384SCH	REV A	SIZE 3	SHT/CONT. ON 03 / 08

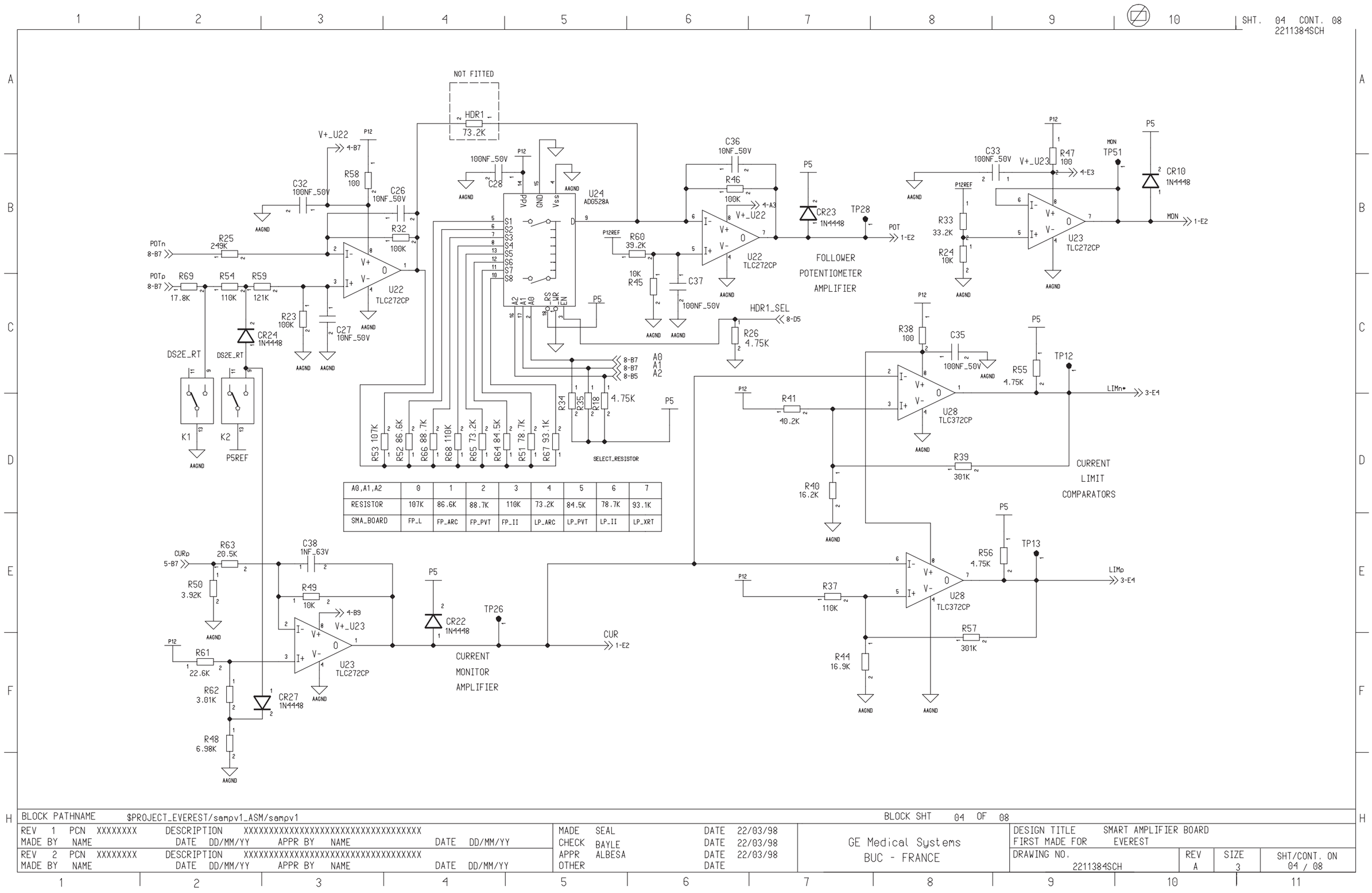

A0,A1,A2	0	1	2	3	4	5	6	7
RESISTOR	107K	86.6K	88.7K	110K	73.2K	84.5K	78.7K	93.1K
SMA_BOARD	FP_L	FP_ARC	FP_PVT	FP_II	LP_ARC	LP_PVT	LP_II	LP_XRT

FRONTAL POSITIONER RACK

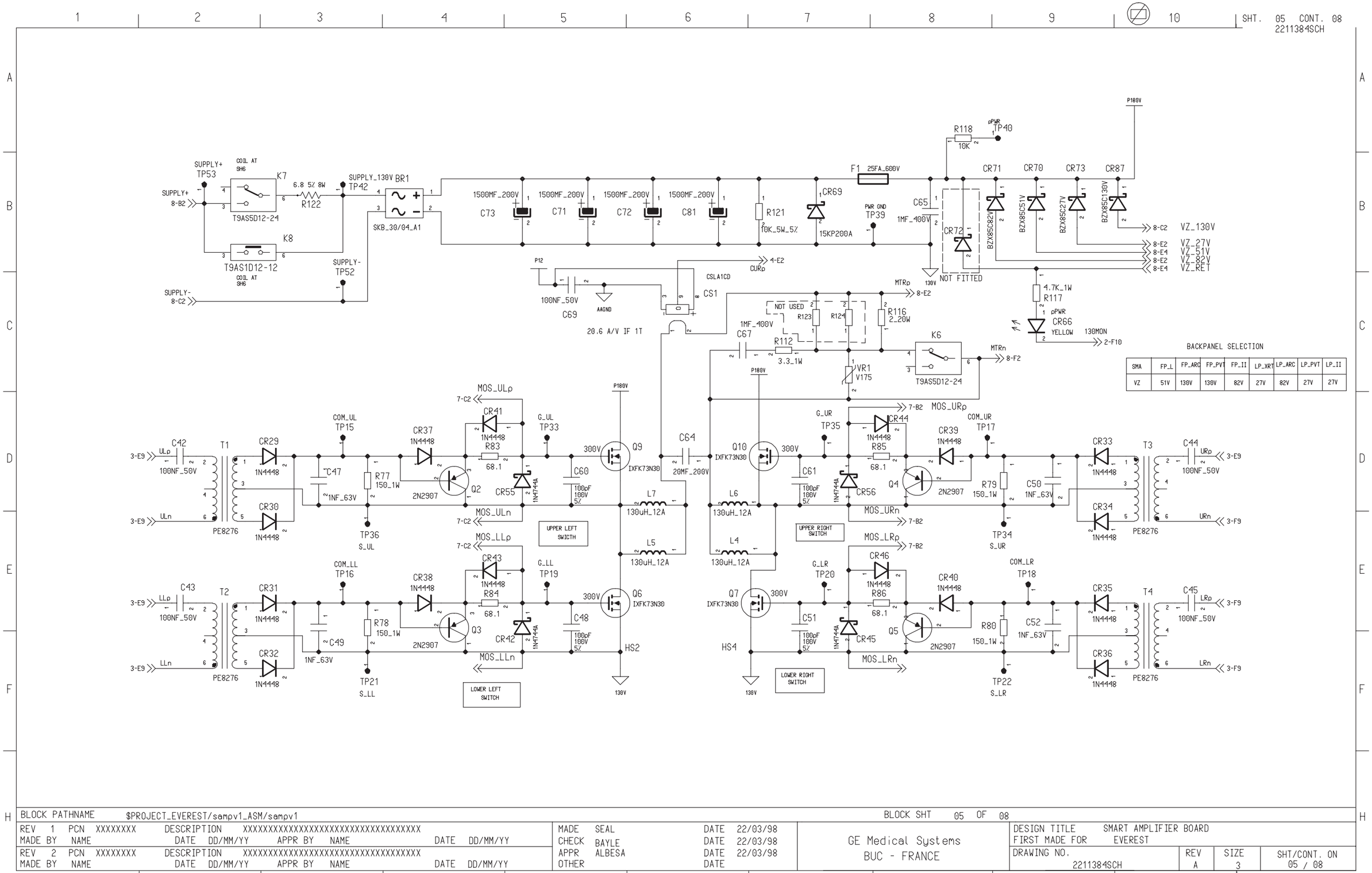

BLOCK PATHNAME $PROJECT_EVEREST/sampv1_ASM/sampv1				BLOCK SHT 05 OF 08		
REV 1 PCN XXXXXXXX DESCRIPTION XXXXXXXXXXXXXXXXXXXXXXXXXXXXXXXXXX MADE BY NAME DATE DD/MM/YY APPR BY NAME DATE DD/MM/YY	MADE SEAL CHECK BAYLE APPR ALBESA OTHER	DATE 22/03/98 DATE 22/03/98 DATE 22/03/98 DATE	GE Medical Systems BUC - FRANCE	DESIGN TITLE SMART AMPLIFIER BOARD FIRST MADE FOR EVEREST		
REV 2 PCN XXXXXXXX DESCRIPTION XXXXXXXXXXXXXXXXXXXXXXXXXXXXXXXXXX MADE BY NAME DATE DD/MM/YY APPR BY NAME DATE DD/MM/YY				DRAWING NO. 2211384SCH	REV A	SIZE 3 / SHT/CONT. ON 05 / 08

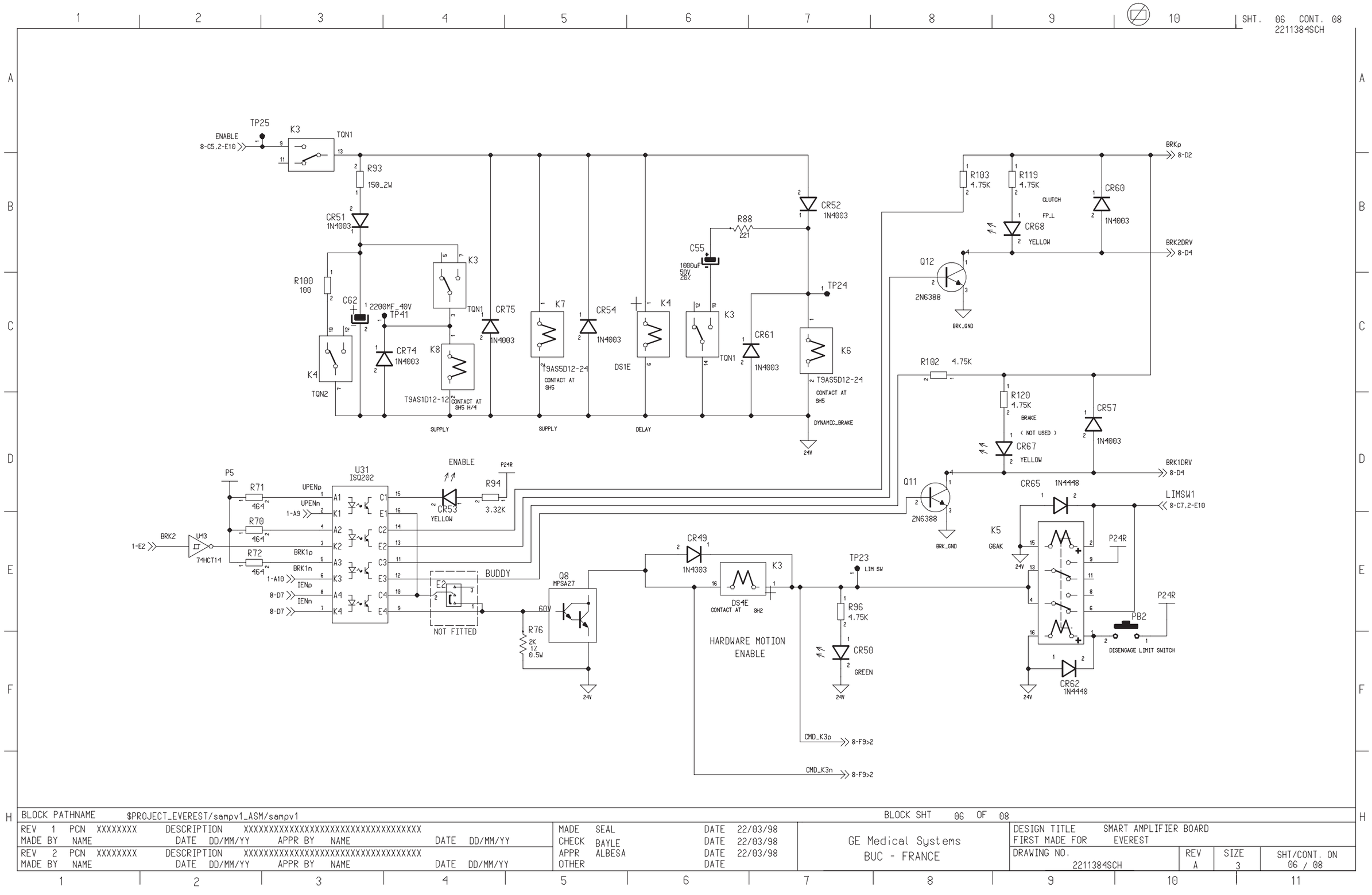

BLOCK PATHNAME $PROJECT_EVEREST/sampv1_ASM/sampv1				BLOCK SHT 06 OF 08	
REV 1 PCN XXXXXXXX DESCRIPTION XXXXXXXXXXXXXXXXXXXXXXXXXXXXXXXXXX MADE BY NAME DATE DD/MM/YY APPR BY NAME DATE DD/MM/YY	MADE SEAL DATE 22/03/98 CHECK BAYLE DATE 22/03/98 APPR ALBESA DATE 22/03/98 OTHER DATE	GE Medical Systems BUC - FRANCE	DESIGN TITLE SMART AMPLIFIER BOARD FIRST MADE FOR EVEREST		
REV 2 PCN XXXXXXXX DESCRIPTION XXXXXXXXXXXXXXXXXXXXXXXXXXXXXXXXXX MADE BY NAME DATE DD/MM/YY APPR BY NAME DATE DD/MM/YY			DRAWING NO. 2211384SCH	REV A	SIZE 3 / SHT/CONT. ON 06 / 08

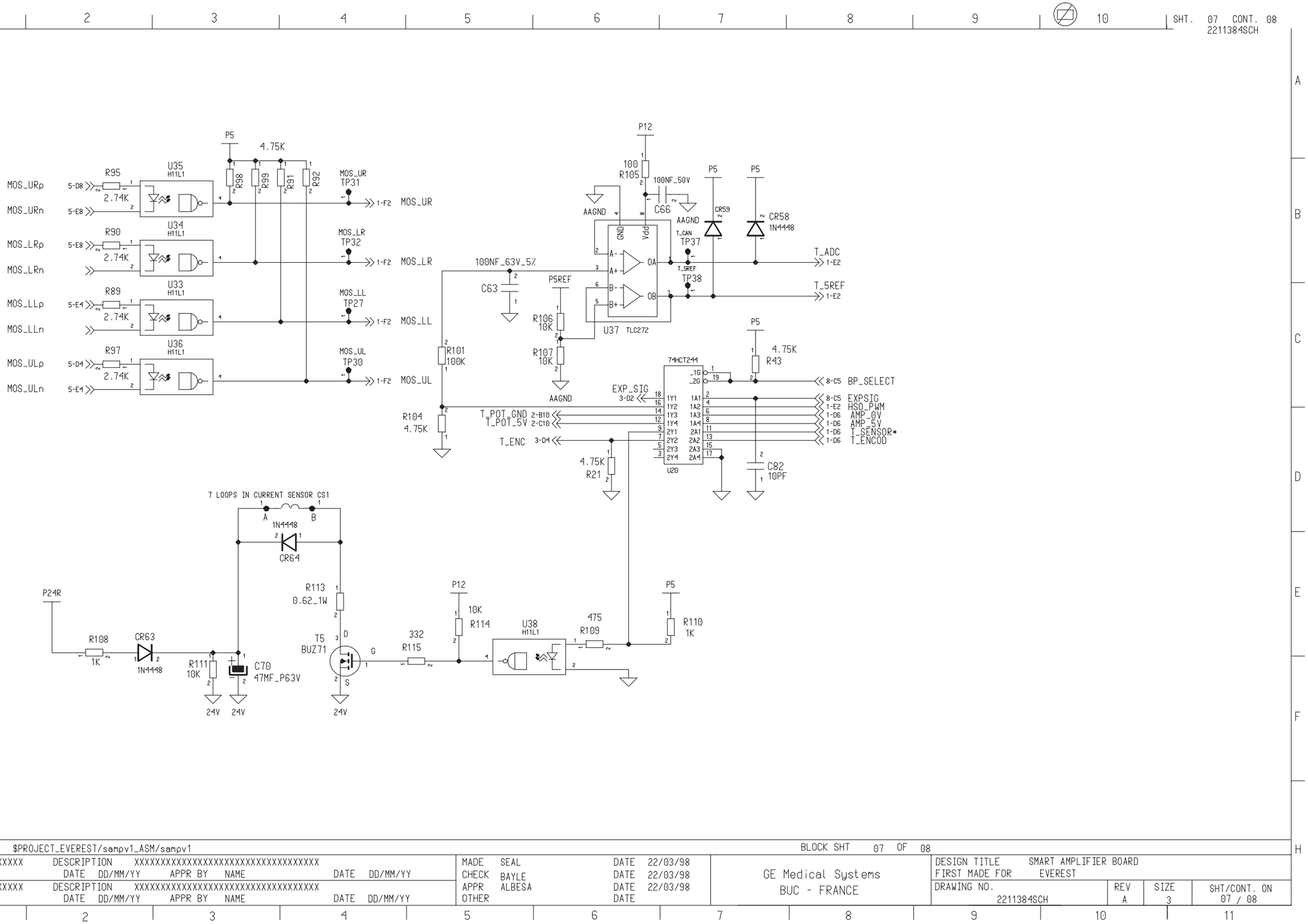

BLOCK PATHNAME $PROJECT_EVEREST/sampv1_ASM/sampv1								BLOCK SHT 07 OF 08			
REV 1 PCN XXXXXXXX DESCRIPTION XXXXXXXXXXXXXXXXXXXXXXXXXXXXXXXXXX MADE BY NAME DATE DD/MM/YY APPR BY NAME DATE DD/MM/YY				MADE SEAL DATE 22/03/98 CHECK BAYLE DATE 22/03/98 APPR ALBESA DATE 22/03/98 OTHER DATE	GE Medical Systems BUC - FRANCE			DESIGN TITLE SMART AMPLIFIER BOARD FIRST MADE FOR EVEREST			
REV 2 PCN XXXXXXXX DESCRIPTION XXXXXXXXXXXXXXXXXXXXXXXXXXXXXXXXXX MADE BY NAME DATE DD/MM/YY APPR BY NAME DATE DD/MM/YY								DRAWING NO. 2211384SCH	REV A	SIZE 3	SHT/CONT. ON 07 / 08

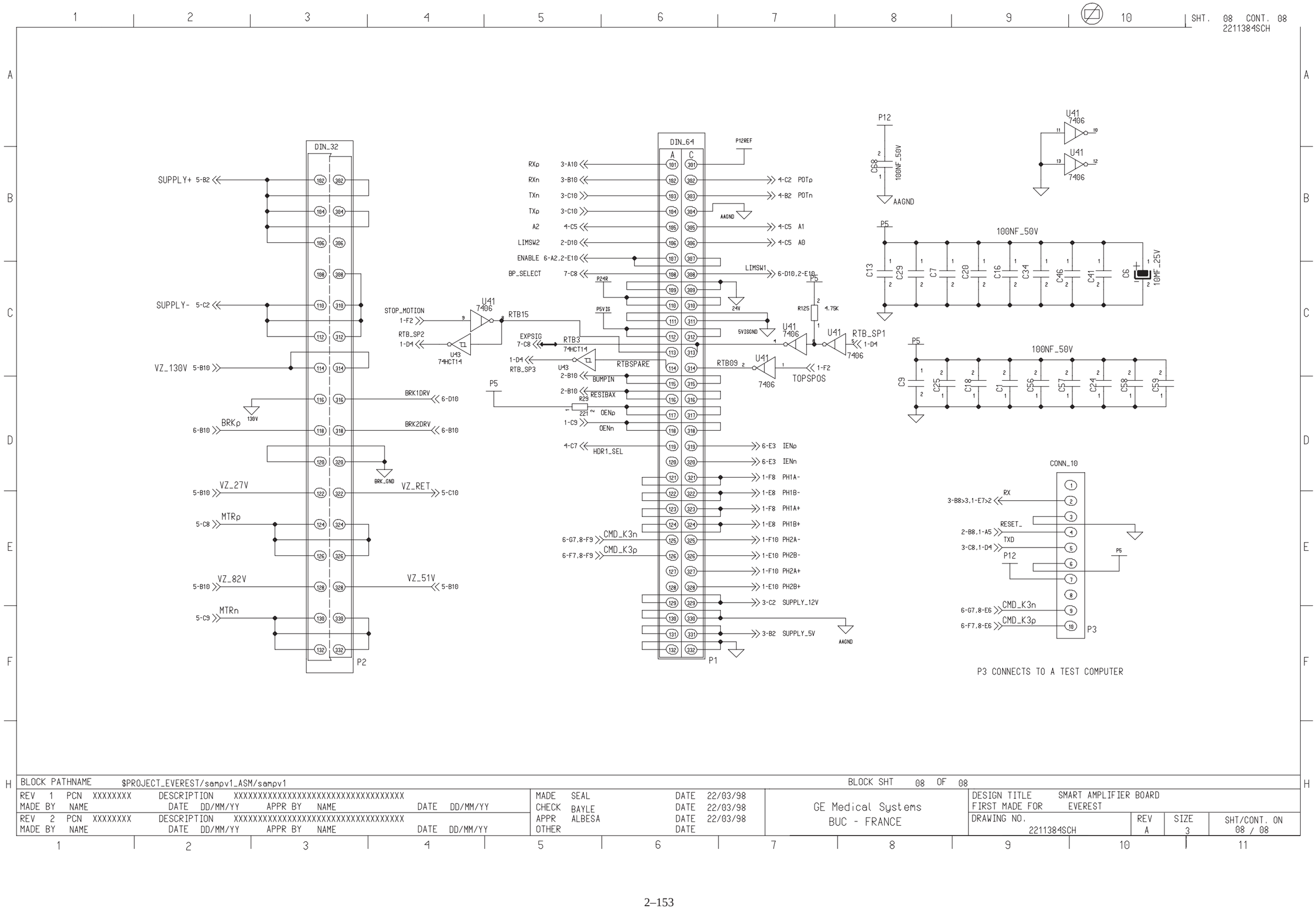

BLOCK PATHNAME $PROJECT_EVEREST/sampv1_ASM/sampv1					BLOCK SHT 08 OF 08	
REV 1 PCN XXXXXXXX DESCRIPTION XXXXXXXXXXXXXXXXXXXXXXXXXXXXXXXXXX MADE BY NAME DATE DD/MM/YY APPR BY NAME DATE DD/MM/YY	MADE SEAL DATE 22/03/98 CHECK BAYLE DATE 22/03/98 APPR ALBESA DATE 22/03/98 OTHER DATE	GE Medical Systems BUC - FRANCE	DESIGN TITLE SMART AMPLIFIER BOARD FIRST MADE FOR EVEREST			
REV 2 PCN XXXXXXXX DESCRIPTION XXXXXXXXXXXXXXXXXXXXXXXXXXXXXXXXXX MADE BY NAME DATE DD/MM/YY APPR BY NAME DATE DD/MM/YY			DRAWING NO. 2211384SCH	REV A	SIZE 3	SHT/CONT. ON 08 / 08

Blank page.

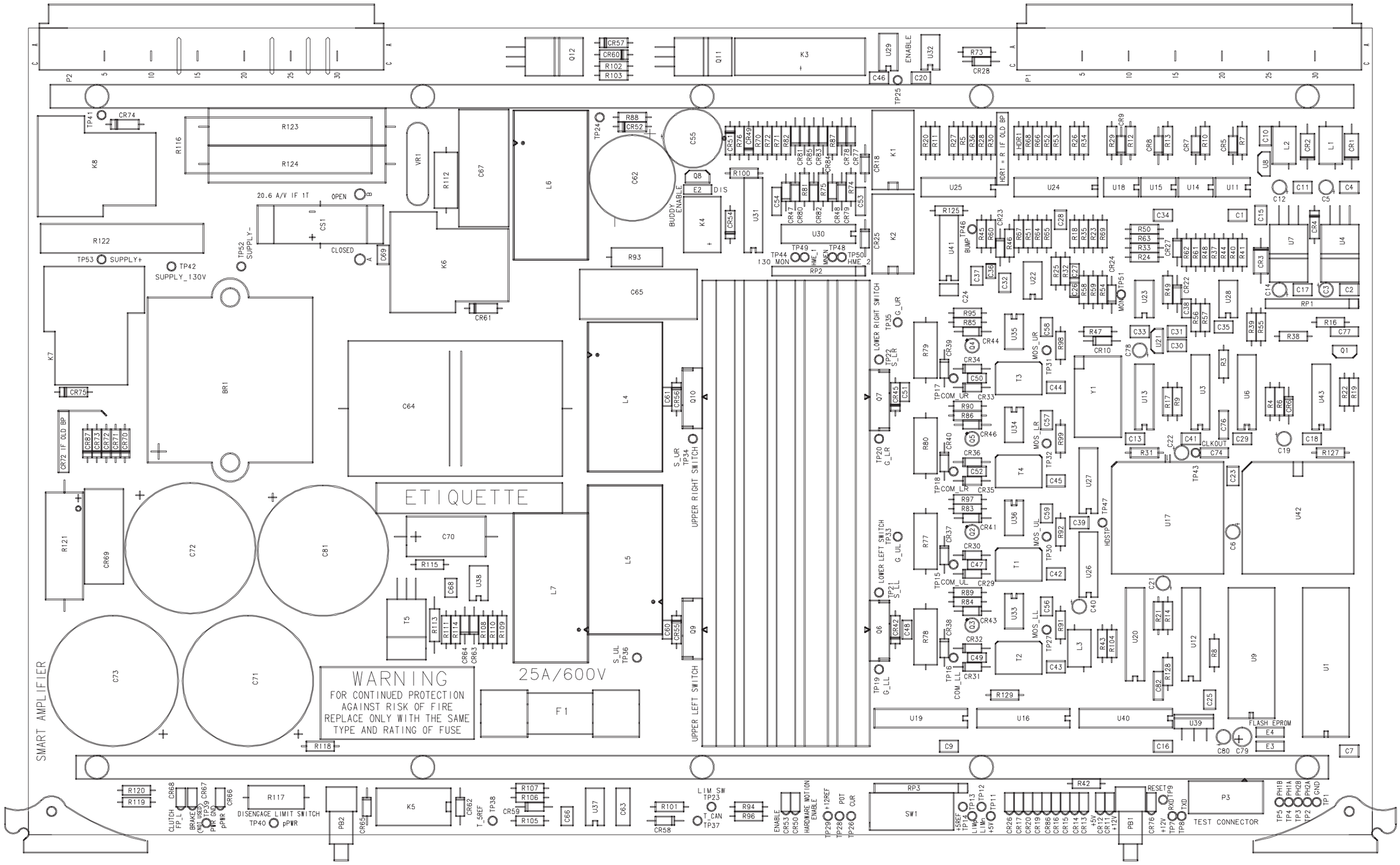
ETIQUETTE
WARNING
FOR CONTINUED PROTECTION
AGAINST RISK OF FIRE
REPLACE ONLY WITH THE SAME
TYPE AND RATING OF FUSE
25A/600V
SMART AMPLIFIER
UPPER RIGHT SWITCH
UPPER LEFT SWITCH
LOWER RIGHT SWITCH
LOWER LEFT SWITCH
DISENGAGE LIMIT SWITCH
TEST CONNECTOR
FLASH EPROM
20.6 A/V IF 1T
OPEN
CLOSED
SUPPLY+
SUPPLY_130V
SUPPLY-
BUDDY ENABLE
ENABLE
HDR1 = R IF OLD BP
CR72 IF OLD BP
CLKOUT
HDSTP
LIM SW
T_CAN
T_5REF
RESET
RXD
TXD
PB1
PB2
P1
P2
P3
K1
K2
K3
K4
K5
K6
K7
K8
Q1
Q6
Q7
Q8
Q9
Q10
Q11
Q12
U1
U3
U4
U6
U7
U9
U12
U13
U14
U15
U16
U17
U18
U19
U20
U21
U22
U23
U24
U25
U26
U27
U28
U29
U30
U31
U32
U33
U34
U35
U36
U37
U38
U39
U40
U41
U42
U43
Y1
T1
T2
T3
T4
T5
L1
L2
L3
L4
L5
L6
L7
C55
C62
C64
C65
C67
C70
C71
C72
C73
C81
BR1
CS1
VR1
F1
RP1
RP2
RP3
SW1
E2
E3
E4

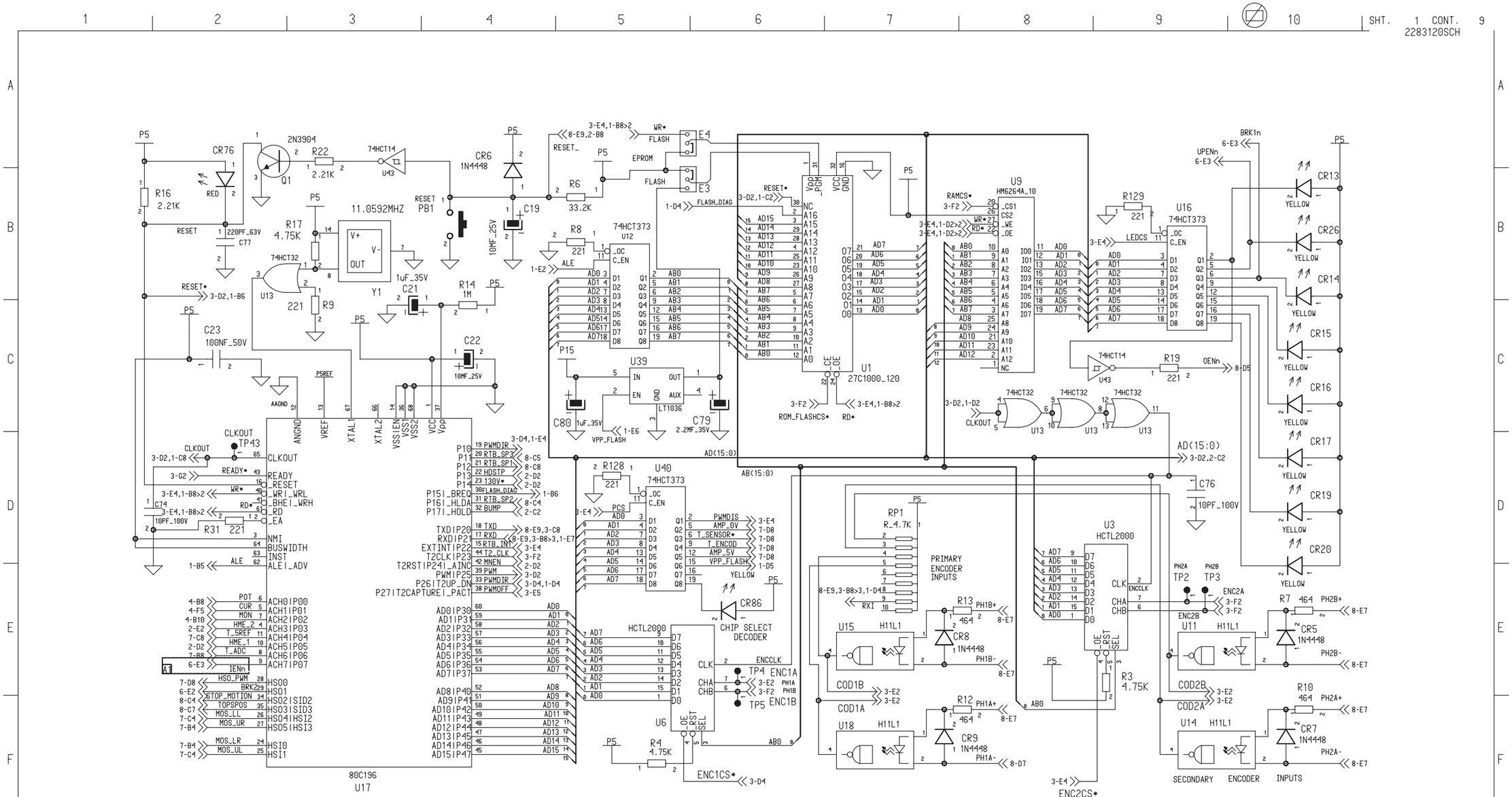
SHT. 1 CONT. 9
2283120SCH
BLOCK PATHNAME $PROJECT_ZIDANE/sampv2_ASM/sampv2
BLOCK SHT 1 OF 9
REV A PCN BUCge54993 DESCRIPTION AJOUT FIL ENTRE U17-9 ET U31-7
MADE BY SEAL IND. DATE 08/09/00 APPR BY FIVEL DATE 08/09/00
REV 2 PCN XXXXXXXX DESCRIPTION XXXXXXXXXXXXXXXXXXXXXXXXXXXXXXXXXXXXXX
MADE BY NAME DATE DD/MM/YY APPR BY NAME DATE DD/MM/YY
MADE SEAL IND. DATE 08/09/00
CHECK FIVEL DATE 08/09/00
APPR FIVEL DATE 08/09/00
OTHER DATE
GE Medical Systems
BUC - FRANCE
DESIGN TITLE SMART AMPLIFIER BOARD - WIRING CHANGE
FIRST MADE FOR ZIDANE
DRAWING NO. 2283120SCH
REV A
SIZE 3
SHT/CONT. ON 1 / 9
80C196
U17
SECONDARY ENCODER INPUTS

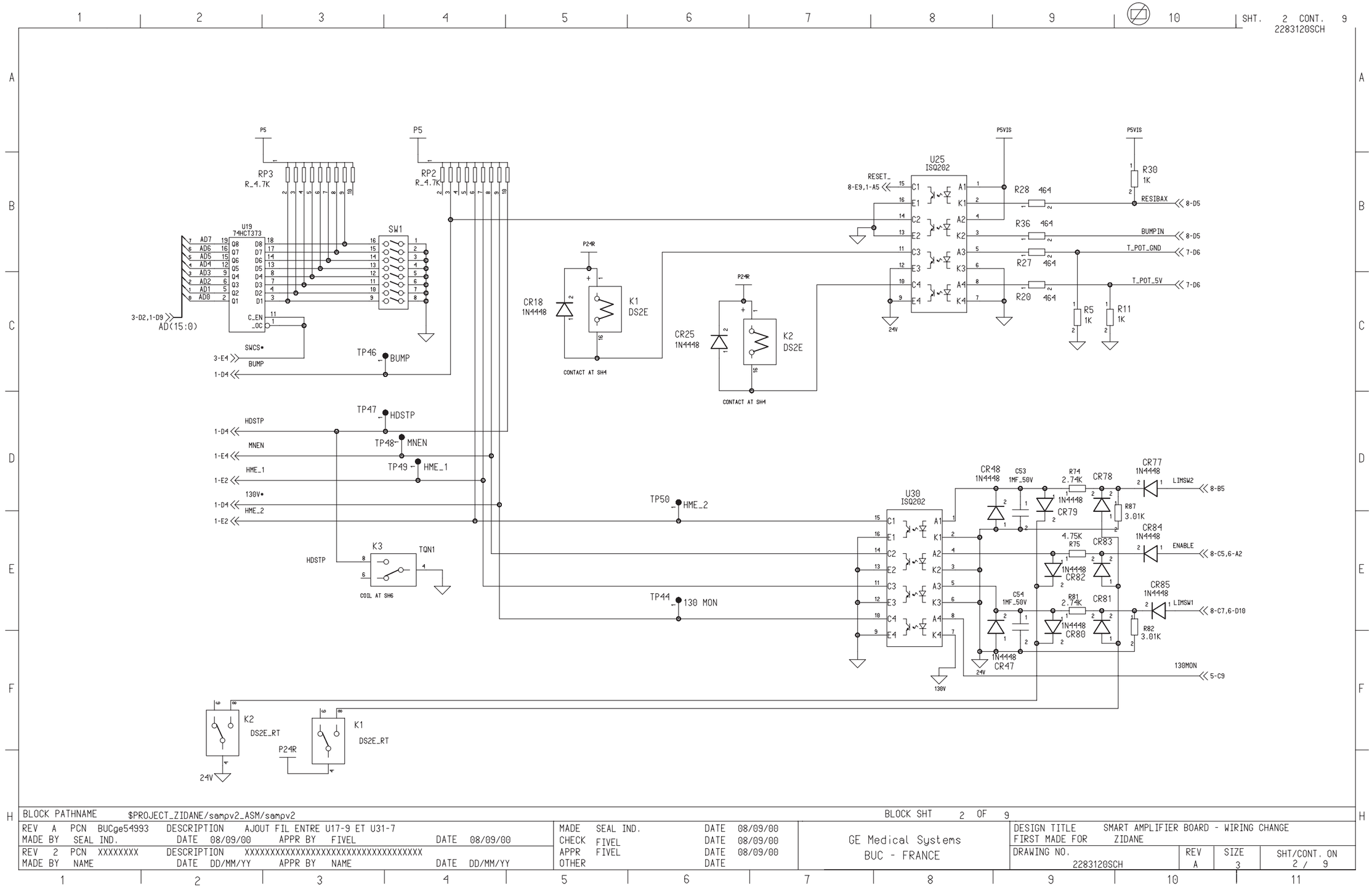

BLOCK PATHNAME $PROJECT_ZIDANE/sampv2_ASM/sampv2								BLOCK SHT 2 OF 9			
REV A PCN BUCge54993 DESCRIPTION AJOUT FIL ENTRE U17-9 ET U31-7				MADE SEAL IND.	DATE 08/09/00	GE Medical Systems BUC - FRANCE		DESIGN TITLE SMART AMPLIFIER BOARD - WIRING CHANGE			
MADE BY SEAL IND. DATE 08/09/00 APPR BY FIVEL DATE 08/09/00				CHECK FIVEL	DATE 08/09/00			FIRST MADE FOR ZIDANE			
REV 2 PCN XXXXXXXX DESCRIPTION XXXXXXXXXXXXXXXXXXXXXXXXXXXXXXXXXX				APPR FIVEL	DATE 08/09/00			DRAWING NO. 2283120SCH	REV A	SIZE 3	SHT/CONT. ON 2 / 9
MADE BY NAME DATE DD/MM/YY APPR BY NAME DATE DD/MM/YY				OTHER	DATE						

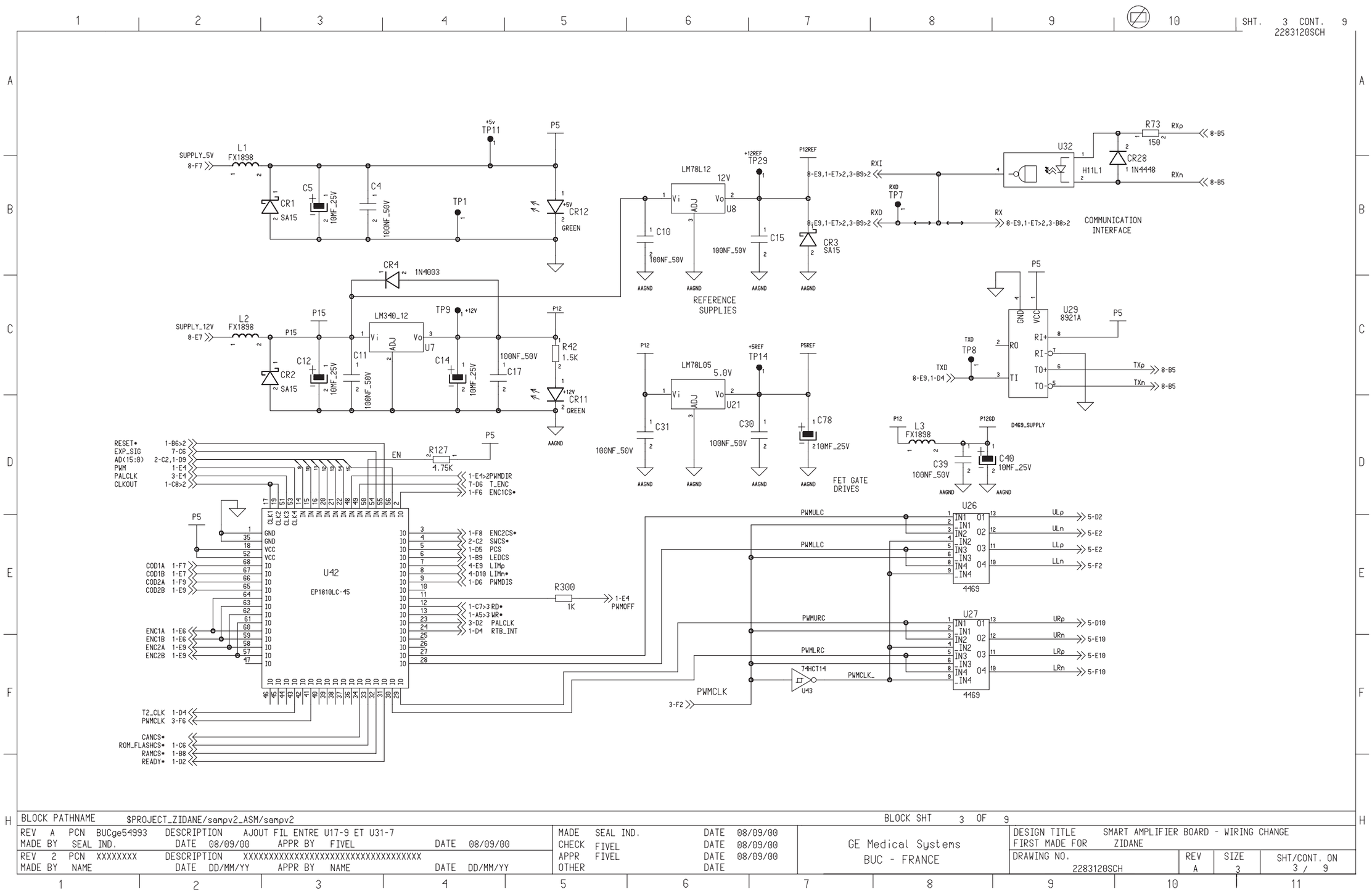

BLOCK PATHNAME $PROJECT_ZIDANE/sampv2_ASM/sampv2							BLOCK SHT 3 OF 9			
REV A PCN BUCge54993 DESCRIPTION AJOUT FIL ENTRE U17-9 ET U31-7 MADE BY SEAL IND. DATE 08/09/00 APPR BY FIVEL DATE 08/09/00				MADE SEAL IND. DATE 08/09/00 CHECK FIVEL DATE 08/09/00 APPR FIVEL DATE 08/09/00 OTHER DATE	GE Medical Systems BUC - FRANCE		DESIGN TITLE SMART AMPLIFIER BOARD - WIRING CHANGE FIRST MADE FOR ZIDANE			
REV 2 PCN XXXXXXXX DESCRIPTION XXXXXXXXXXXXXXXXXXXXXXXXXXXXXXXXXXXX MADE BY NAME DATE DD/MM/YY APPR BY NAME DATE DD/MM/YY							DRAWING NO. 2283120SCH	REV A	SIZE 3	SHT/CONT. ON 3 / 9

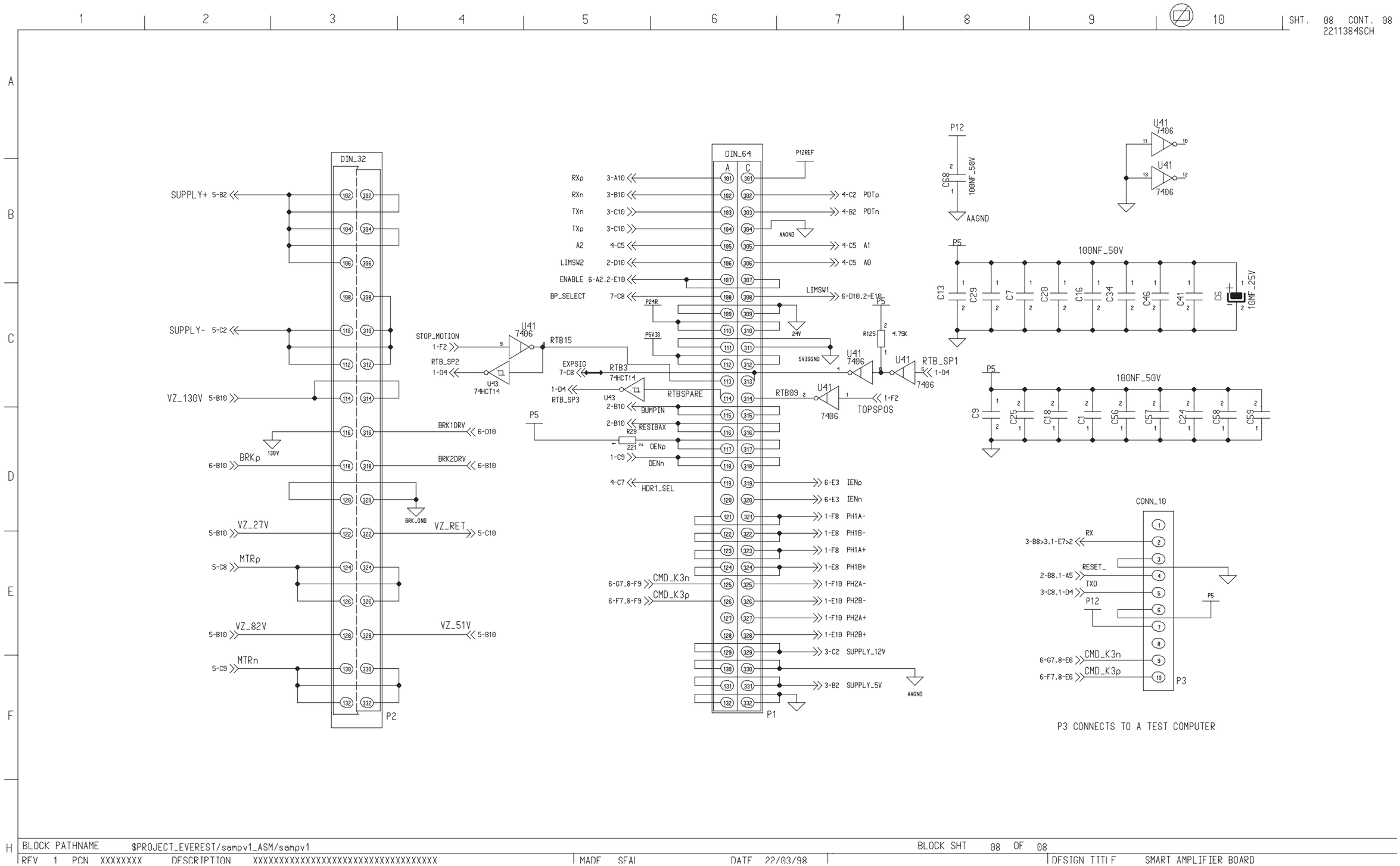
SHT. 08 CONT. 08
2211384SCH
DIN_32
SUPPLY+ 5-B2
SUPPLY- 5-C2
VZ_130V 5-B10
BRK1DRV 6-D10
BRKp 6-B10
130V
BRK2DRV 6-B10
BRK_GND
VZ_27V 5-B10
VZ_RET 5-C10
MTRp 5-C8
VZ_82V 5-B10
VZ_51V 5-B10
MTRn 5-C9
P2
DIN_64
P12REF
RXp 3-A10
RXn 3-B10
TXn 3-C10
TXp 3-C10
A2 4-C5
LIMSW2 2-D10
ENABLE 6-A2,2-E10
BP_SELECT 7-C8
4-C2 POTp
4-B2 POTn
AAGND
4-C5 A1
4-C5 A0
LIMSW1 6-D10,2-E10
24V
P24R
P5V_IS
5VISGND
STOP_MOTION 1-F2
RTB_SP2 1-D4
U41 7406
U43 74HCT14
RTB15
EXPSIG 7-C8
RTB3
1-D4 RTB_SP3
RTBSPARE
RTB09
TOPSPOS 1-F2
RTB_SP1 1-D4
R125 4.75K
2-B10 BUMPIN
2-B10 RESIBAX
R29 221
OENp
1-C9 OENn
4-C7 HDR1_SEL
6-E3 IENp
6-E3 IENn
1-F8 PH1A-
1-E8 PH1B-
1-F8 PH1A+
1-E8 PH1B+
6-G7,8-F9 CMD_K3n
6-F7,8-F9 CMD_K3p
1-F10 PH2A-
1-E10 PH2B-
1-F10 PH2A+
1-E10 PH2B+
3-C2 SUPPLY_12V
3-B2 SUPPLY_5V
P1
P12
C68 100NF_50V
AAGND
100NF_50V
C13 C29 C7 C20 C16 C34 C46 C41 C6 10MF_25V
C9 C25 C18 C1 C56 C57 C24 C58 C59
CONN_10
3-B8>3,1-E7>2 RX
2-B8,1-A5 RESET_
3-C8,1-D4 TXD
P3
P3 CONNECTS TO A TEST COMPUTER
BLOCK PATHNAME $PROJECT_EVEREST/sampv1_ASM/sampv1
BLOCK SHT 08 OF 08
REV 1 PCN XXXXXXXX DESCRIPTION XXXXXXXXXXXXXXXXXXXXXXXXXXXXXXXX
MADE SFAI DATE 22/03/98
DESIGN TITLE SMART AMPLIFIER BOARD

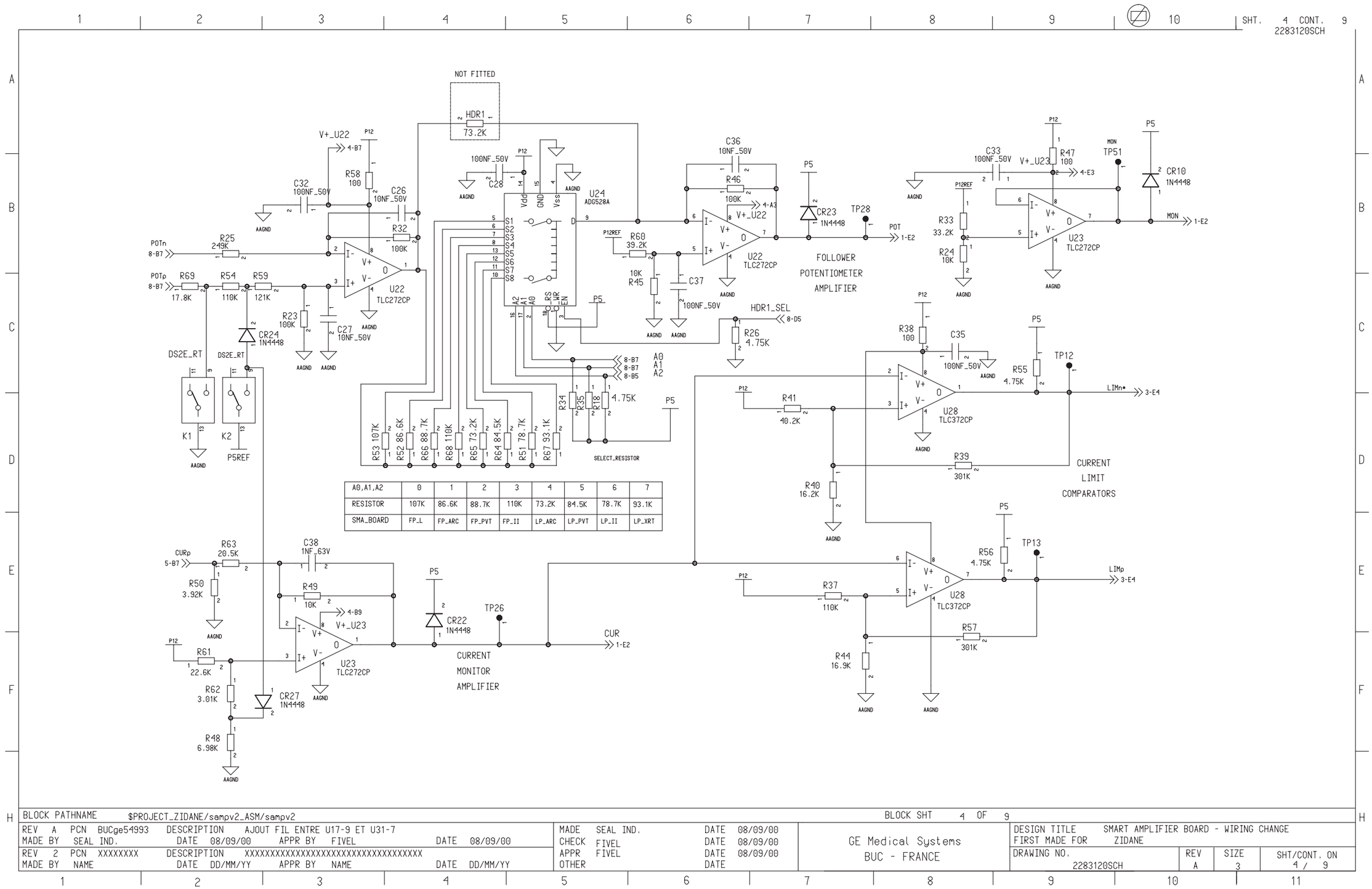

FRONTAL POSITIONER RACK

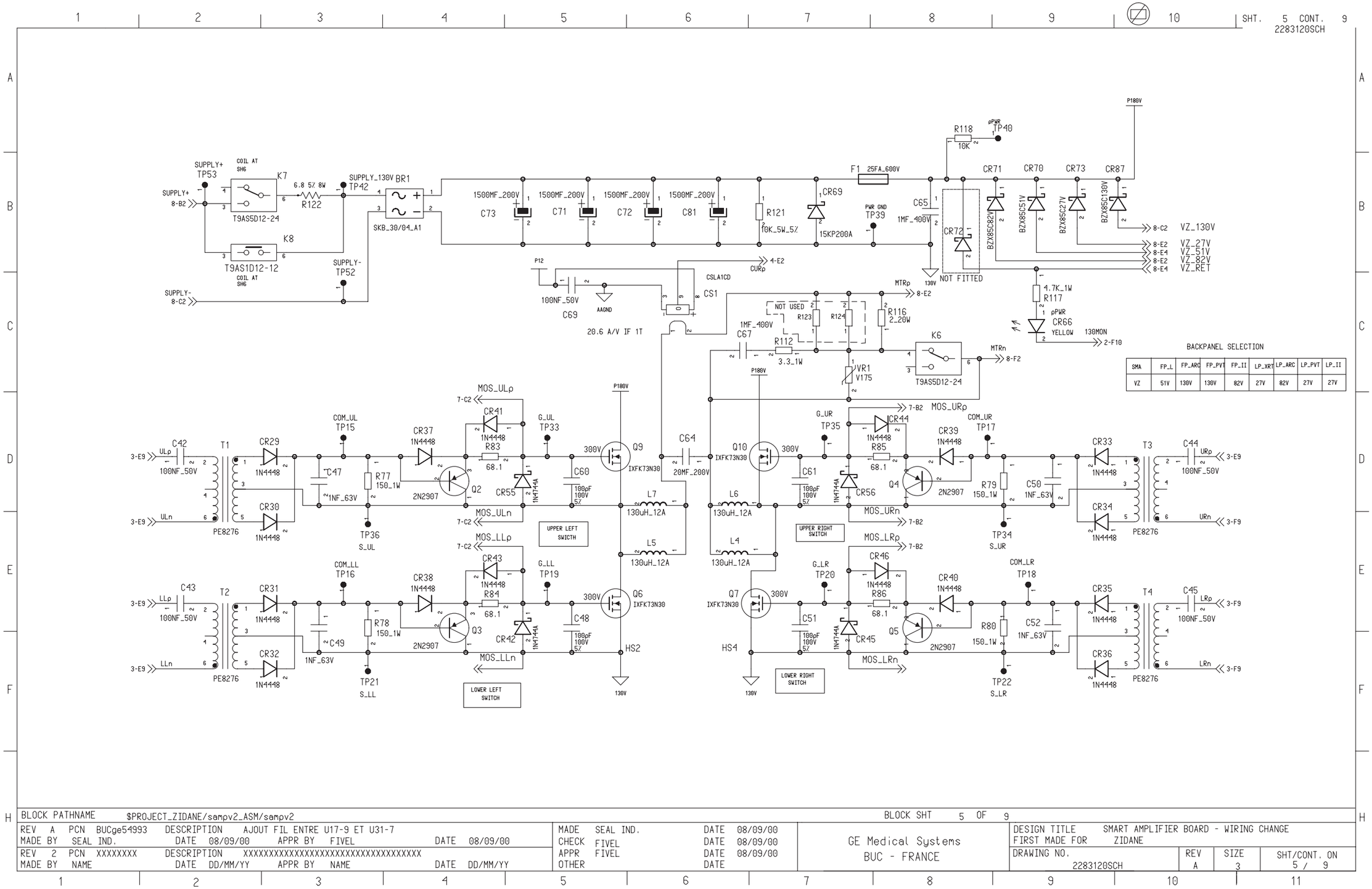

BLOCK PATHNAME $PROJECT_ZIDANE/sampv2_ASM/sampv2					BLOCK SHT 5 OF 9	
REV A PCN BUCge54993 DESCRIPTION AJOUT FIL ENTRE U17-9 ET U31-7	MADE SEAL IND. DATE 08/09/00	CHECK FIVEL DATE 08/09/00	GE Medical Systems BUC - FRANCE	DESIGN TITLE SMART AMPLIFIER BOARD - WIRING CHANGE		
MADE BY SEAL IND. DATE 08/09/00 APPR BY FIVEL DATE 08/09/00				FIRST MADE FOR ZIDANE		
REV 2 PCN XXXXXXXX DESCRIPTION XXXXXXXXXXXXXXXXXXXXXXXXXXXXXXXXXXXX	APPR FIVEL DATE 08/09/00			DRAWING NO. 2283120SCH	REV A	SIZE 3
MADE BY NAME DATE DD/MM/YY APPR BY NAME DATE DD/MM/YY	OTHER DATE					SHT/CONT. ON 5 / 9

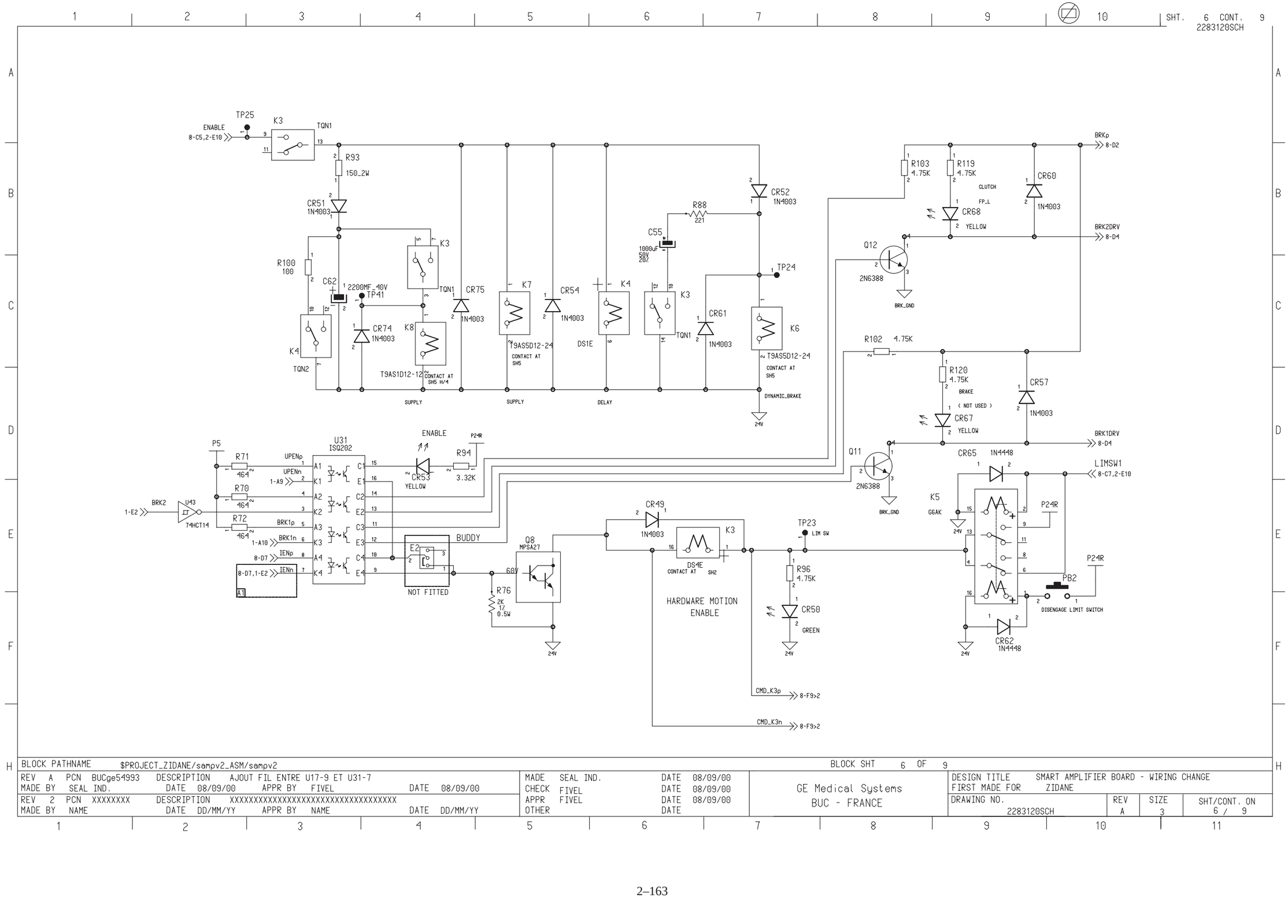

FRONTAL POSITIONER RACK

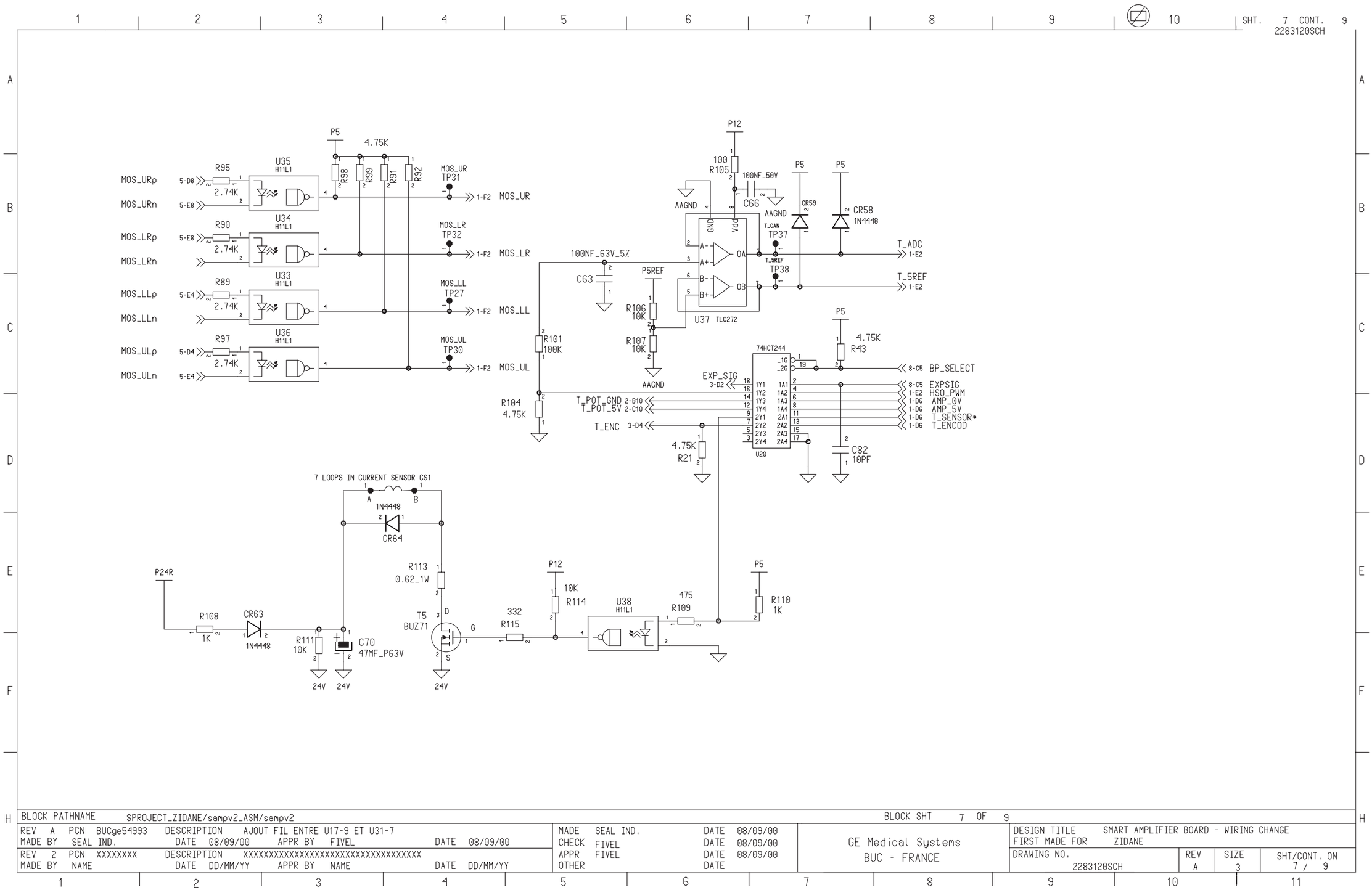
SHT. 7 CONT. 9
2283120SCH
MOS_URp
MOS_URn
MOS_LRp
MOS_LRn
MOS_LLp
MOS_LLn
MOS_ULp
MOS_ULn
R95
R90
R89
R97
2.74K
U35
U34
U33
U36
H11L1
P5
4.75K
R98
R99
R91
R92
MOS_UR
MOS_LR
MOS_LL
MOS_UL
TP31
TP32
TP27
TP30
1-F2
P12
100
R105
100NF_50V
C66
AAGND
CR59
CR58
1N4448
T_CAN
TP37
T_5REF
TP38
T_ADC
1-E2
100NF_63V_5%
C63
P5REF
R106
10K
R107
10K
U37 TLC272
R101
100K
R104
4.75K
74HCT244
EXP_SIG
3-D2
T_POT_GND 2-B10
T_POT_5V 2-C10
T_ENC 3-D4
R43
BP_SELECT
EXPSIG
HSO_PWM
AMP_0V
AMP_5V
T_SENSOR*
T_ENCOD
R21
U20
C82
10PF
7 LOOPS IN CURRENT SENSOR CS1
1N4448
CR64
P24R
R108
1K
CR63
1N4448
R111
10K
C70
47MF_P63V
24V
R113
0.62_1W
T5
BUZ71
332
R115
R114
10K
U38
H11L1
475
R109
R110
1K
BLOCK PATHNAME $PROJECT_ZIDANE/sampv2_ASM/sampv2
BLOCK SHT 7 OF 9
REV A PCN BUCge54993 DESCRIPTION AJOUT FIL ENTRE U17-9 ET U31-7
MADE BY SEAL IND. DATE 08/09/00 APPR BY FIVEL DATE 08/09/00
REV 2 PCN XXXXXXXX DESCRIPTION XXXXXXXXXXXXXXXXXXXXXXXXXXXXXXXXXXXX
MADE BY NAME DATE DD/MM/YY APPR BY NAME DATE DD/MM/YY
MADE SEAL IND. DATE 08/09/00
CHECK FIVEL DATE 08/09/00
APPR FIVEL DATE 08/09/00
OTHER DATE
GE Medical Systems
BUC - FRANCE
DESIGN TITLE SMART AMPLIFIER BOARD - WIRING CHANGE
FIRST MADE FOR ZIDANE
DRAWING NO. 2283120SCH
REV A
SIZE 3
SHT/CONT. ON 7 / 9

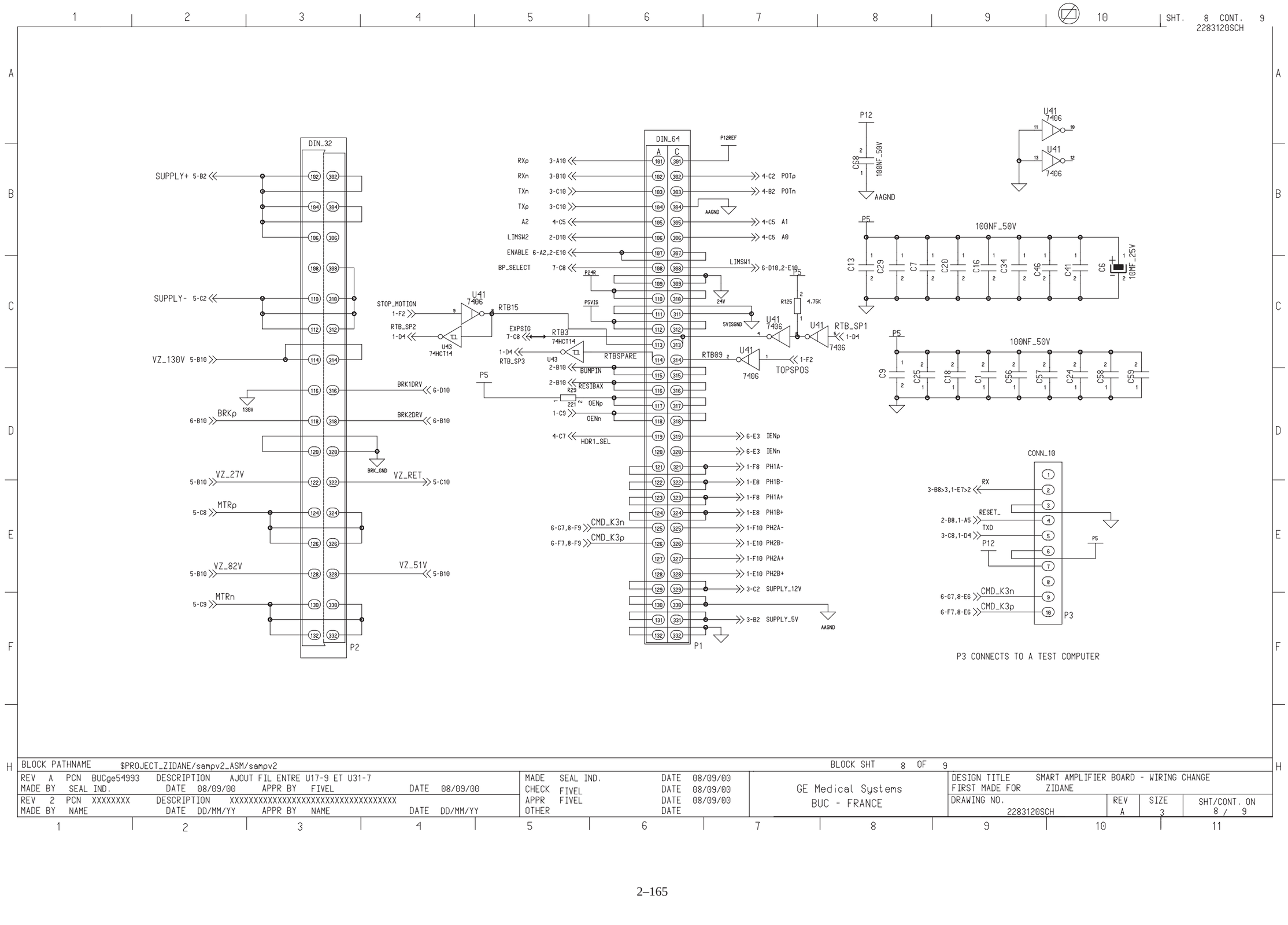

FRONTAL POSITIONER RACK

1 2 3 4 5 6 7 8 9 10 SHT. 9 CONT. 9 2283120SCH

A B C D E F H

MODIFICATION A:

MODIF. REF.	SHEET NO*	CROSS-REF.	MODIFICATION EXPLANATION	SPR NUMBER
A1	01/06	E2/E3	ADD WIRE BETWEEN U17-9 AND U31-7	BUCge54993

REPERE MODIF.	NUMERO PAGE	LOCAL. TOPO.	DESCRIPTION DE LA MODIFICATION	NUMERO SPR
A1	01/06	E2/E3	AJOUT FIL ENTRE U17-9 ET U31-7	BUCge54993

BLOCK PATHNAME $PROJECT_ZIDANE/sampv2_ASM/sampv2

BLOCK SHT 900 OF 9

REV A PCN BUCge54993 DESCRIPTION AJOUT FIL ENTRE U17-9 ET U31-7
MADE BY SEAL IND. DATE 08/09/00 APPR BY FIVEL DATE 08/09/00

REV 2 PCN XXXXXXXX DESCRIPTION XXXXXXXXXXXXXXXXXXXXXXXXXXXXXXXXXXXX
MADE BY NAME DATE DD/MM/YY APPR BY NAME DATE DD/MM/YY

MADE SEAL IND. DATE 08/09/00
CHECK FIVEL DATE 08/09/00
APPR FIVEL DATE 08/09/00
OTHER DATE

GE Medical Systems
BUC - FRANCE

DESIGN TITLE SMART AMPLIFIER BOARD - WIRING CHANGE
FIRST MADE FOR ZIDANE
DRAWING NO. 2283120SCH | REV A | SIZE 3 | SHT/CONT. ON 9 / 9

1 2 3 4 5 6 7 8 9 10 11

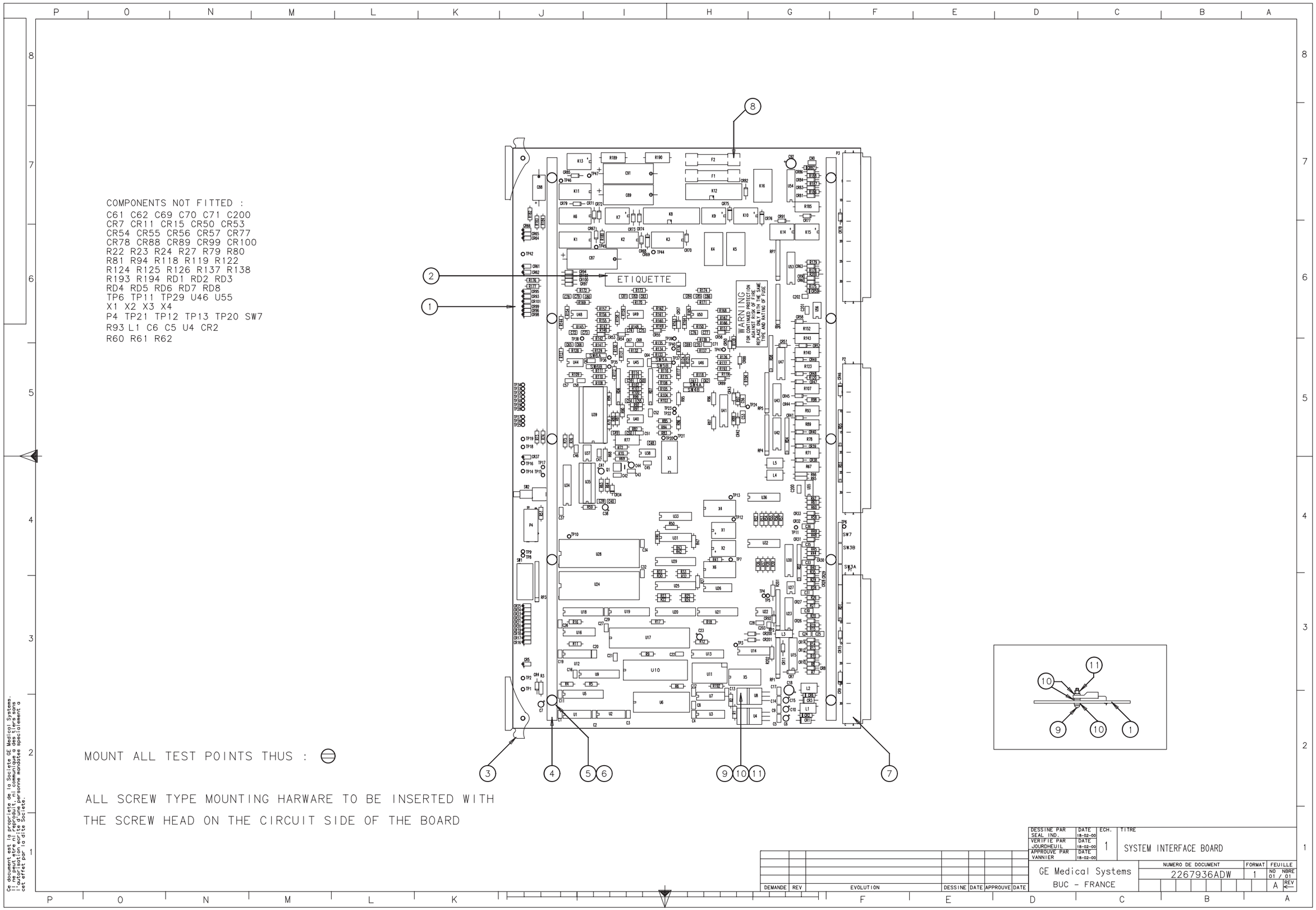

Ce document est la propriete de la Societe GE Medical Systems. Il ne peut etre ni reproduit, ni communique a des tiers sans l'autorisation ecrite d'une personne mandatee specialement a cet effet par la dite Societe.

FRONTAL POSITIONER RACK

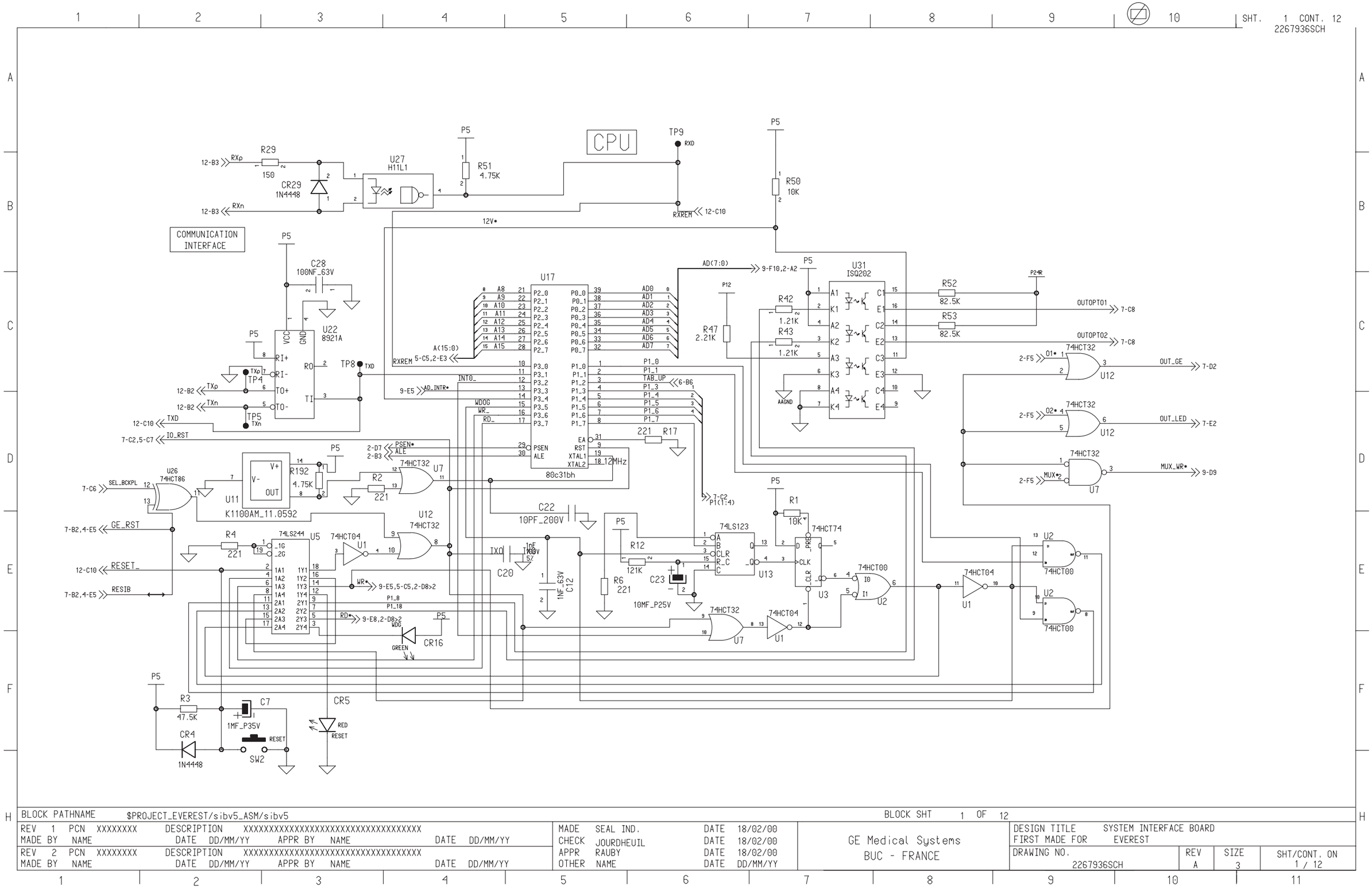
SHT. 1 CONT. 12
2267936SCH
CPU
COMMUNICATION INTERFACE
U17
80c31bh
U31
ISQ202
U22
8921A
U11
K1100AM_11.0592
U26
74HCT86
U5
74LS244
U13
74LS123
74HCT74
74HCT00
74HCT32
74HCT04
U12
U7
U1
U2
U3
CR16
CR5
CR4
1N4448
SW2
C7
1MF_P35V
R3
47.5K
R4
221
R2
221
R1
10K
R12
121K
R6
221
C20
C22
10PF_200V
C23
10MF_P25V
C12
1NF_63V
R17
221
R47
2.21K
R42
1.21K
R43
1.21K
R52
82.5K
R53
82.5K
R51
4.75K
R50
10K
R29
150
CR29
1N4448
U27
H11L1
C28
100NF_63V
R192
4.75K
TP4
TP5
TP8
TP9
OUTOPTO1
OUTOPTO2
OUT_GE
OUT_LED
MUX_WR*
GE_RST
RESET_
RESIB
SEL_BCKPL
IO_RST
RXREM
12V*
BLOCK PATHNAME $PROJECT_EVEREST/sibv5_ASM/sibv5
BLOCK SHT 1 OF 12
REV 1 PCN XXXXXXXX DESCRIPTION XXXXXXXXXXXXXXXXXXXXXXXXXXXXXXXXXXX
MADE BY NAME DATE DD/MM/YY APPR BY NAME DATE DD/MM/YY
REV 2 PCN XXXXXXXX DESCRIPTION XXXXXXXXXXXXXXXXXXXXXXXXXXXXXXXXXXX
MADE BY NAME DATE DD/MM/YY APPR BY NAME DATE DD/MM/YY
MADE SEAL IND. DATE 18/02/00
CHECK JOURDHEUIL DATE 18/02/00
APPR RAUBY DATE 18/02/00
OTHER NAME DATE DD/MM/YY
GE Medical Systems
BUC - FRANCE
DESIGN TITLE SYSTEM INTERFACE BOARD
FIRST MADE FOR EVEREST
DRAWING NO. 2267936SCH
REV A
SIZE 3
SHT/CONT. ON 1 / 12

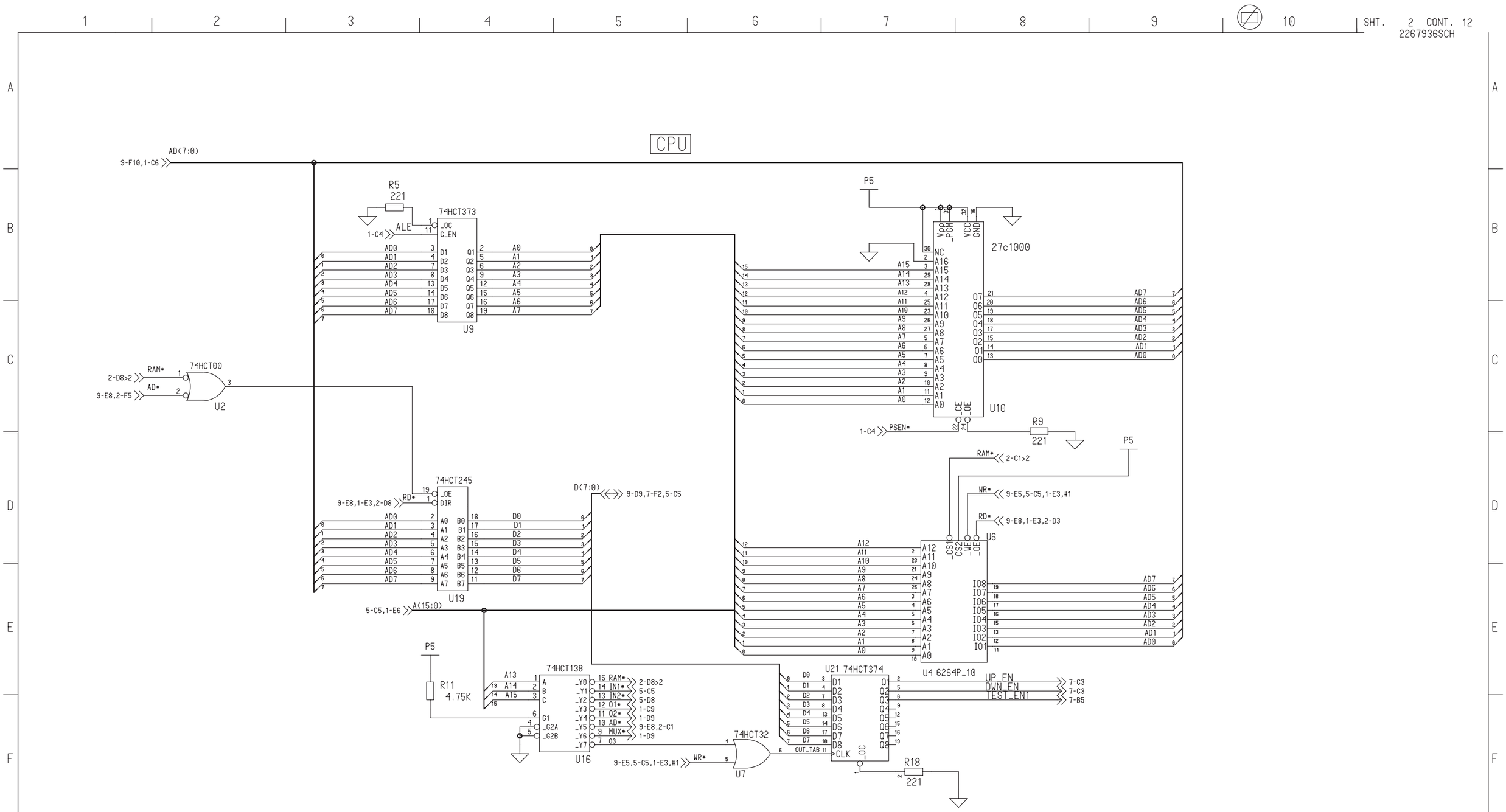

BLOCK PATHNAME $PROJECT_EVEREST/sibv5_ASM/sibv5				BLOCK SHT 2 OF 12	
REV 1 PCN XXXXXXXX DESCRIPTION XXXXXXXXXXXXXXXXXXXXXXXXXXXXXXXXXX MADE BY NAME DATE DD/MM/YY APPR BY NAME DATE DD/MM/YY	MADE SEAL IND. DATE 18/02/00 CHECK JOURDHEUIL DATE 18/02/00 APPR RAUBY DATE 18/02/00 OTHER NAME DATE DD/MM/YY	GE Medical Systems BUC - FRANCE	DESIGN TITLE SYSTEM INTERFACE BOARD FIRST MADE FOR EVEREST		
REV 2 PCN XXXXXXXX DESCRIPTION XXXXXXXXXXXXXXXXXXXXXXXXXXXXXXXXXX MADE BY NAME DATE DD/MM/YY APPR BY NAME DATE DD/MM/YY			DRAWING NO. 2267936SCH	REV A	SIZE 3 / SHT/CONT. ON 2 / 12

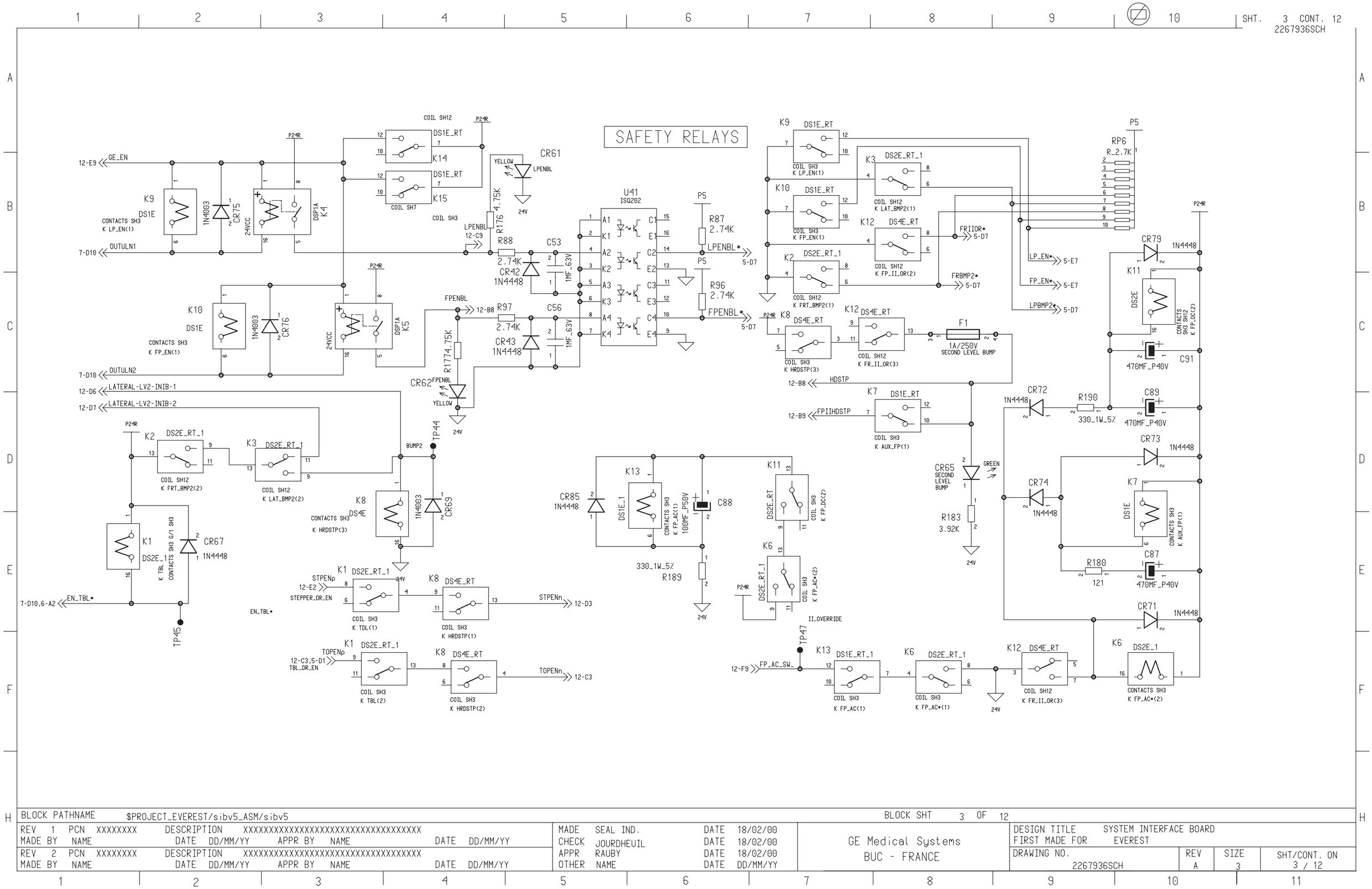
SHT. 3 CONT. 12
2267936SCH
SAFETY RELAYS
U41
ISQ202
GE_EN
OUTULN1
OUTULN2
LATERAL-LV2-INIB-1
LATERAL-LV2-INIB-2
EN_TBL*
STPENp
STEPPER_DR_EN
TOPENp
TBL_DR_EN
STPENn
TOPENn
LPENBL
FPENBL
BUMP2
HDSTP
FPIIHDSTP
FRIIOR*
FRBMP2*
LP_EN*
FP_EN*
LPBMP2*
FP_AC_SW_
II_OVERRIDE
1A/250V
SECOND LEVEL BUMP
SECOND LEVEL BUMP
GREEN
470MF_P40V
330_1W_5%
100MF_P50V
BLOCK PATHNAME $PROJECT_EVEREST/sibv5_ASM/sibv5
BLOCK SHT 3 OF 12
REV 1 PCN XXXXXXXX DESCRIPTION XXXXXXXXXXXXXXXXXXXXXXXXXXXXXXXXXXXX
MADE BY NAME DATE DD/MM/YY APPR BY NAME DATE DD/MM/YY
REV 2 PCN XXXXXXXX DESCRIPTION XXXXXXXXXXXXXXXXXXXXXXXXXXXXXXXXXXXX
MADE BY NAME DATE DD/MM/YY APPR BY NAME DATE DD/MM/YY
MADE SEAL IND. DATE 18/02/00
CHECK JOURDHEUIL DATE 18/02/00
APPR RAUBY DATE 18/02/00
OTHER NAME DATE DD/MM/YY
GE Medical Systems
BUC - FRANCE
DESIGN TITLE SYSTEM INTERFACE BOARD
FIRST MADE FOR EVEREST
DRAWING NO. 2267936SCH
REV A
SIZE 3
SHT/CONT. ON 3 / 12

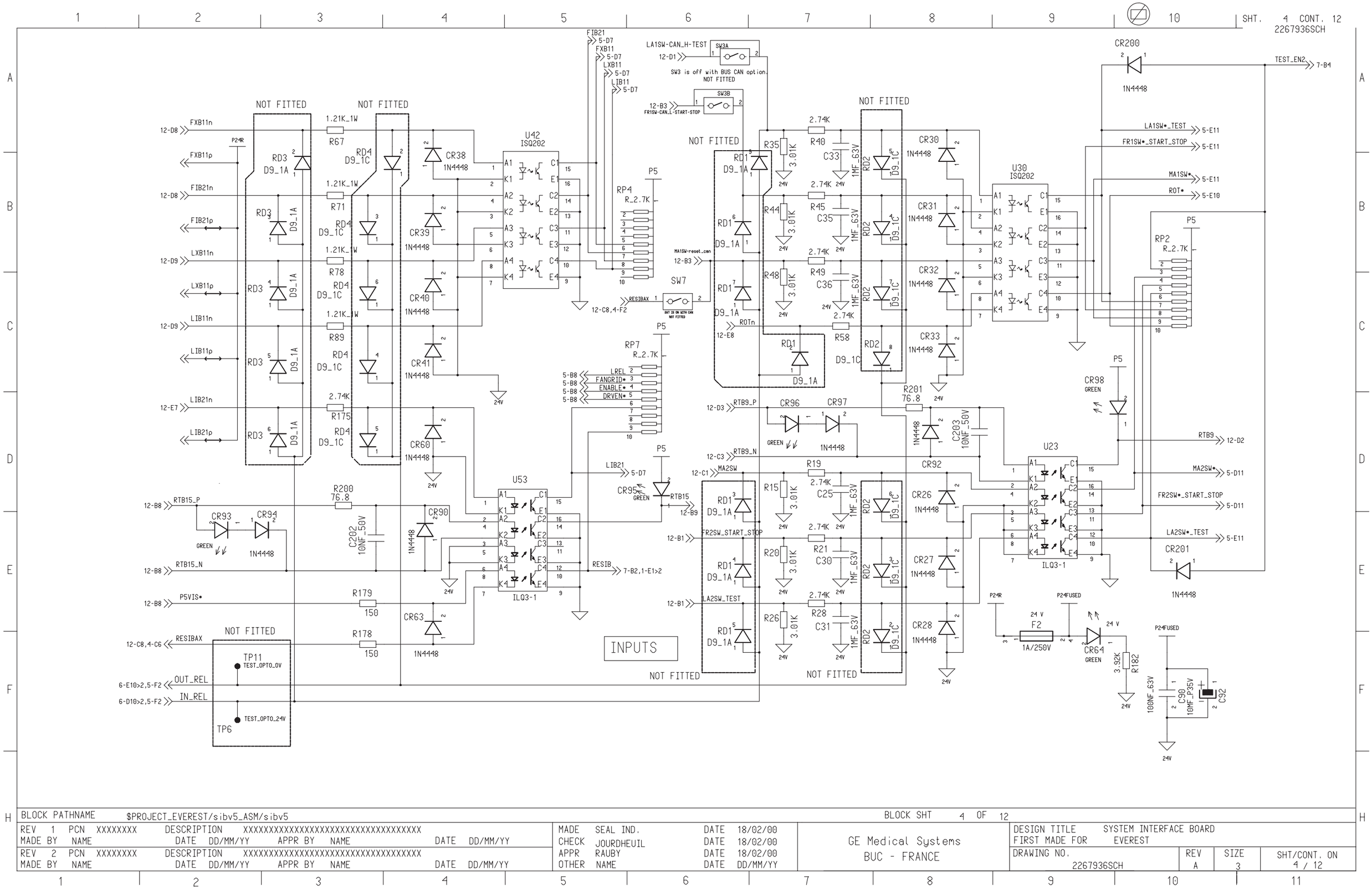
SHT. 4 CONT. 12
2267936SCH
NOT FITTED
U42
ISQ202
U30
ISQ202
U53
ILQ3-1
U23
ILQ3-1
INPUTS
TP11
TEST_OPTO_0V
TP6
TEST_OPTO_24V
OUT_REL
IN_REL
RESIBAX
P5VIS*
RTB15_P
RTB15_N
FXB11n
FXB11p
FIB21n
FIB21p
LXB11n
LXB11p
LIB11n
LIB11p
LIB21n
LIB21p
LA1SW-CAN_H-TEST
SW3 is off with BUS CAN option.
NOT FITTED
FR1SW-CAN_L-START-STOP
MA1SW-reset_can
ROTn
RESIB
LREL
FANGRID*
ENABLE*
DRVEN*
RTB9_P
RTB9_N
MA2SW
FR2SW_START_STOP
LA2SW_TEST
TEST_EN2
LA1SW*_TEST
FR1SW*_START_STOP
MA1SW*
ROT*
RTB9
MA2SW*
FR2SW*_START_STOP
LA2SW*_TEST
P24R
P24FUSED
24 V
F2
1A/250V
CR64
GREEN
R182
3.92K
C90
10MF_P35V
C92
100NF_63V
CR200
CR201
CR98
CR96
CR97
CR92
CR93
CR94
CR90
CR63
CR95
CR30
CR31
CR32
CR33
CR26
CR27
CR28
CR38
CR39
CR40
CR41
CR60
CR64
1N4448
R200
76.8
R179
150
R178
150
R201
76.8
C203
10NF_50V
C202
10NF_50V
RP4
RP7
RP2
R_2.7K
P5
24V
BLOCK PATHNAME $PROJECT_EVEREST/sibv5_ASM/sibv5
BLOCK SHT 4 OF 12
REV 1 PCN XXXXXXXX DESCRIPTION XXXXXXXXXXXXXXXXXXXXXXXXXXXXXXXXXXXX
MADE BY NAME DATE DD/MM/YY APPR BY NAME DATE DD/MM/YY
REV 2 PCN XXXXXXXX DESCRIPTION XXXXXXXXXXXXXXXXXXXXXXXXXXXXXXXXXXXX
MADE BY NAME DATE DD/MM/YY APPR BY NAME DATE DD/MM/YY
MADE SEAL IND. DATE 18/02/00
CHECK JOURDHEUIL DATE 18/02/00
APPR RAUBY DATE 18/02/00
OTHER NAME DATE DD/MM/YY
GE Medical Systems
BUC - FRANCE
DESIGN TITLE SYSTEM INTERFACE BOARD
FIRST MADE FOR EVEREST
DRAWING NO. 2267936SCH
REV A
SIZE 3
SHT/CONT. ON 4 / 12

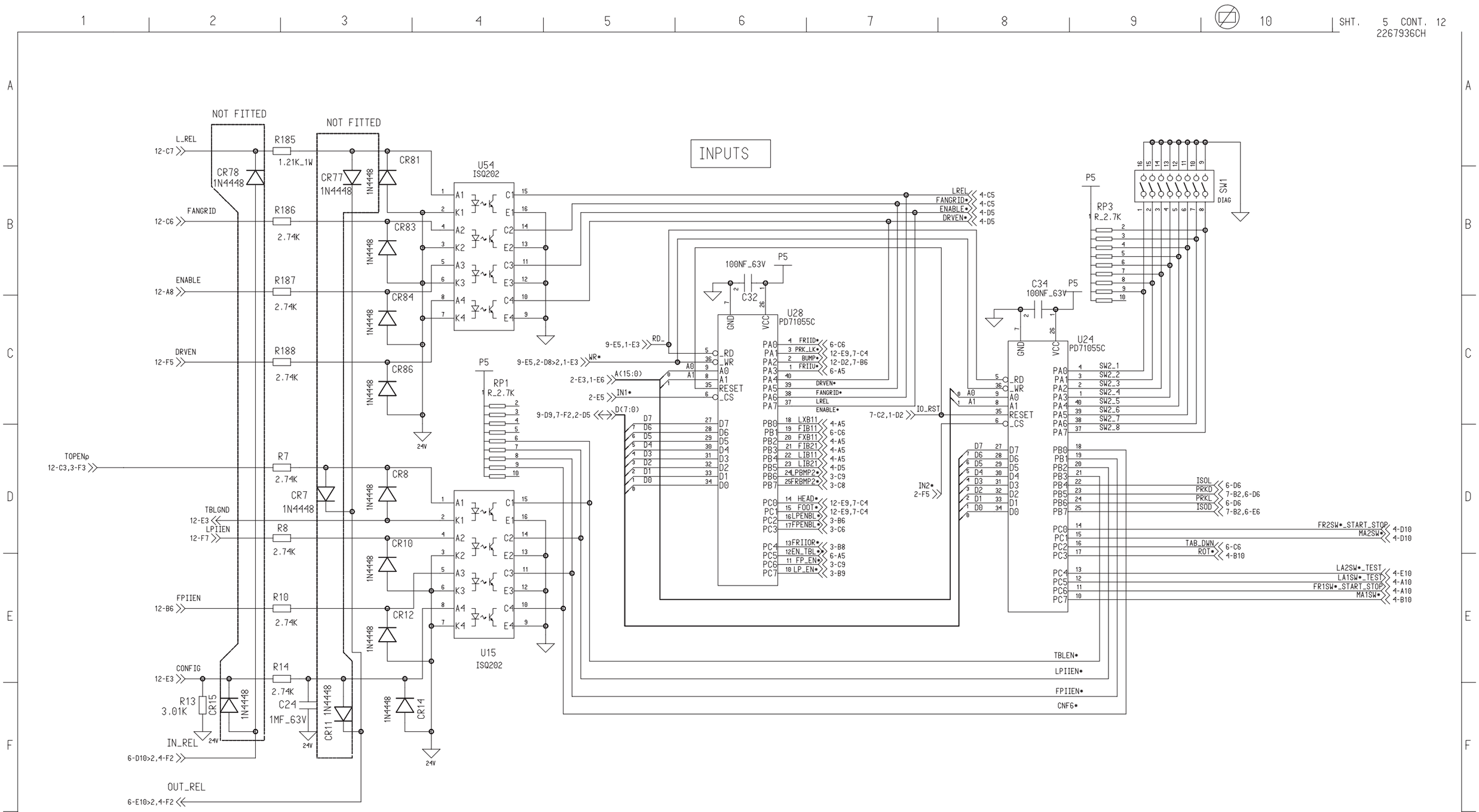

BLOCK PATHNAME $PROJECT_EVEREST/sibv5_ASM/sibv5				BLOCK SHT 5 OF 12	
REV 1 PCN XXXXXXXX DESCRIPTION XXXXXXXXXXXXXXXXXXXXXXXXXXXXXXXXXX MADE BY NAME DATE DD/MM/YY APPR BY NAME DATE DD/MM/YY	MADE SEAL IND. DATE 18/02/00 CHECK JOURDHEUIL DATE 18/02/00 APPR RAUBY DATE 18/02/00 OTHER NAME DATE DD/MM/YY	GE Medical Systems BUC - FRANCE	DESIGN TITLE SYSTEM INTERFACE BOARD FIRST MADE FOR EVEREST		
REV 2 PCN XXXXXXXX DESCRIPTION XXXXXXXXXXXXXXXXXXXXXXXXXXXXXXXXXX MADE BY NAME DATE DD/MM/YY APPR BY NAME DATE DD/MM/YY			DRAWING NO. 2267936CH	REV A	SIZE 3 / SHT/CONT. ON 5 / 12

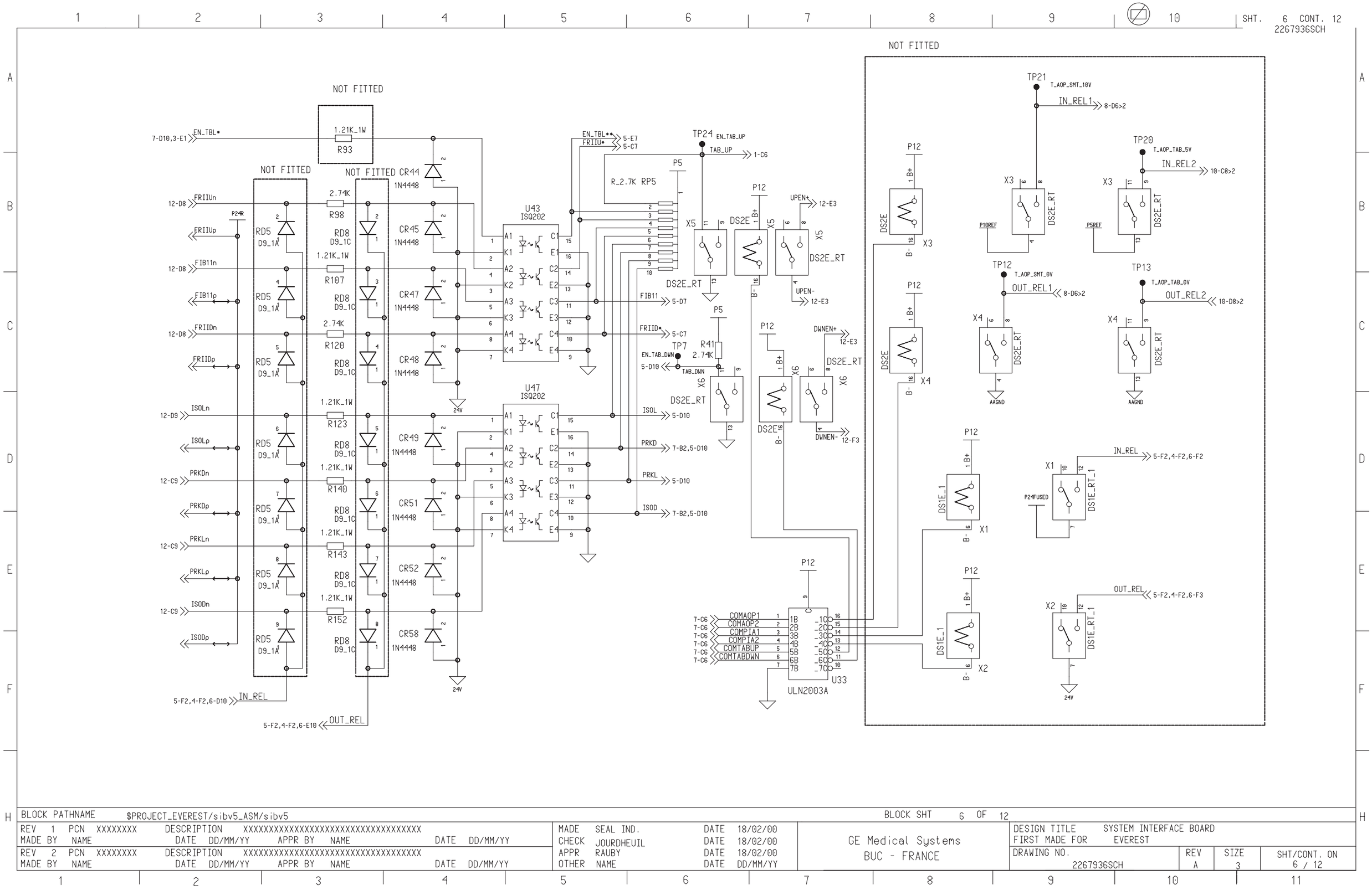
SHT. 6 CONT. 12
2267936SCH
NOT FITTED
U43
ISQ202
U47
ISQ202
U33
ULN2003A
TP24
TP7
TP21
TP20
TP12
TP13
R93
R98
R107
R120
R123
R140
R143
R152
R41
R_2.7K RP5
CR44
CR45
CR47
CR48
CR49
CR51
CR52
CR58
1N4448
DS2E_RT
DS1E_RT_1
DS1E_1
IN_REL
OUT_REL
BLOCK PATHNAME $PROJECT_EVEREST/sibv5_ASM/sibv5
BLOCK SHT 6 OF 12
REV 1 PCN XXXXXXXX DESCRIPTION XXXXXXXXXXXXXXXXXXXXXXXXXXXXXXXXXXX
MADE BY NAME DATE DD/MM/YY APPR BY NAME DATE DD/MM/YY
REV 2 PCN XXXXXXXX DESCRIPTION XXXXXXXXXXXXXXXXXXXXXXXXXXXXXXXXXXX
MADE BY NAME DATE DD/MM/YY APPR BY NAME DATE DD/MM/YY
MADE SEAL IND. DATE 18/02/00
CHECK JOURDHEUIL DATE 18/02/00
APPR RAUBY DATE 18/02/00
OTHER NAME DATE DD/MM/YY
GE Medical Systems
BUC - FRANCE
DESIGN TITLE SYSTEM INTERFACE BOARD
FIRST MADE FOR EVEREST
DRAWING NO. 2267936SCH
REV A
SIZE 3
SHT/CONT. ON 6 / 12

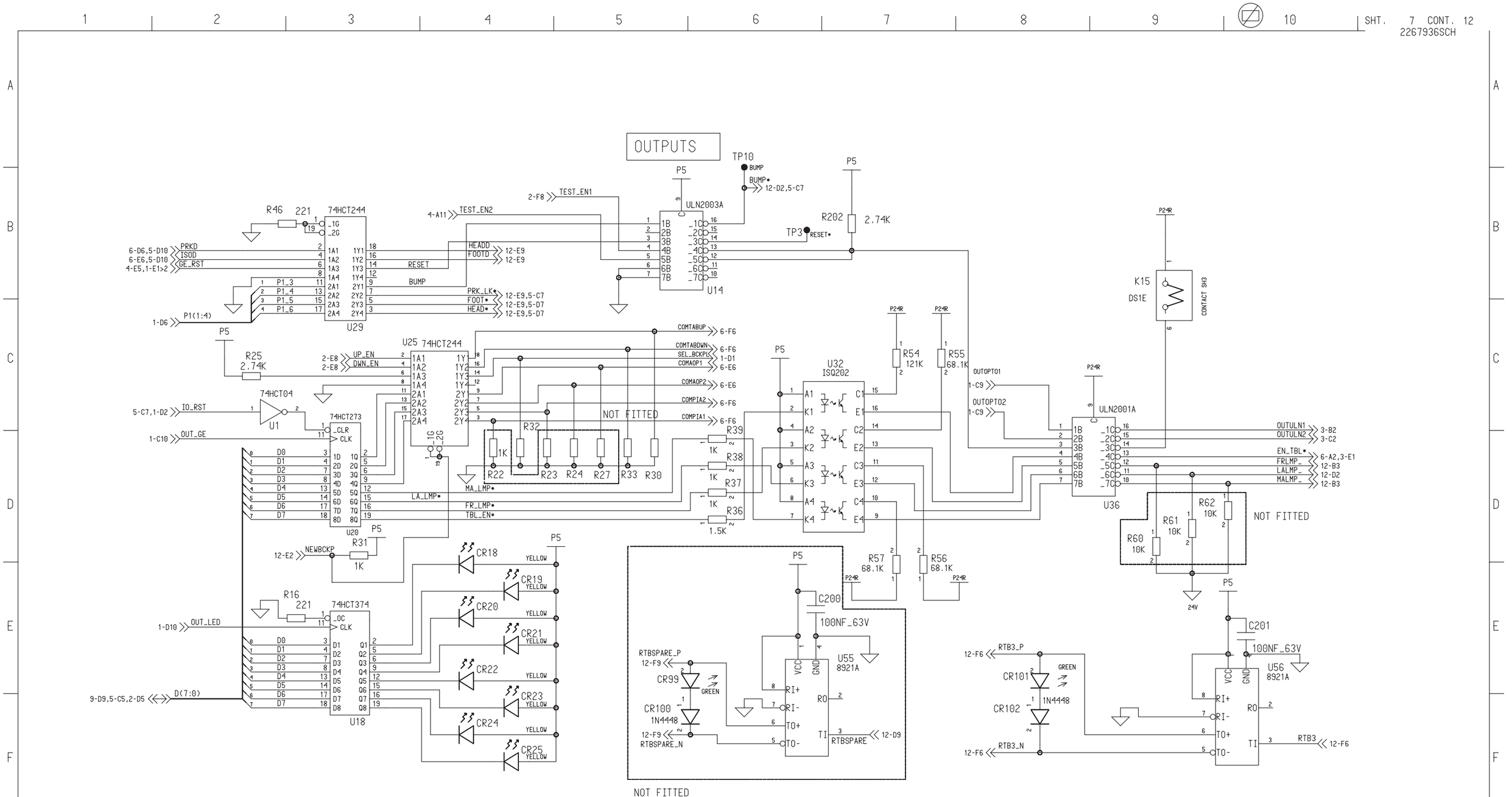

BLOCK PATHNAME $PROJECT_EVEREST/sibv5_ASM/sibv5								BLOCK SHT 7 OF 12			
REV 1 PCN XXXXXXXX DESCRIPTION XXXXXXXXXXXXXXXXXXXXXXXXXXXXXXXXXX MADE BY NAME DATE DD/MM/YY APPR BY NAME DATE DD/MM/YY				MADE SEAL IND. DATE 18/02/00 CHECK JOURDHEUIL DATE 18/02/00 APPR RAUBY DATE 18/02/00 OTHER NAME DATE DD/MM/YY		GE Medical Systems BUC - FRANCE		DESIGN TITLE SYSTEM INTERFACE BOARD FIRST MADE FOR EVEREST			
REV 2 PCN XXXXXXXX DESCRIPTION XXXXXXXXXXXXXXXXXXXXXXXXXXXXXXXXXX MADE BY NAME DATE DD/MM/YY APPR BY NAME DATE DD/MM/YY								DRAWING NO. 2267936SCH	REV A	SIZE 3	SHT/CONT. ON 7 / 12

SHT. 8 CONT. 12
2267936CH

SMART HANDLE POLARITIES
TWIST GRIP: CW CAUSES TP TO GO POSITIVE
ROCKER: RIGHT DOWN CAUSES TP TO GO POSITIVE
LEVER: UP CAUSES TP TO GO POSITIVE

SMART HANDLE
HANDLE 1 IS ADJACENT TO
STATUS CONTROL 1 ON THE TABLE

HANDLE 1 LEVER
HANDLE 1 TWIST GRIP
HANDLE 1 ROCKER
HANDLE 2 TWIST GRIP
HANDLE 2 ROCKER
HANDLE 2 LEVER

SW4A, SW4B, SW5A, SW5B, SW6A, SW6B: SW IS OFF WITH BUS CAN

TP37 NOT FITTED
TP40 SMT_IN_TWIST1
TP35 SMT_IN_ROCKER1
TP22 SMT_IN_TWIST2 NOT FITTED
TP23 SMT_IN_ROCKER2 NOT FITTED
TP36 SMT_IN_LEVER2 NOT FITTED

TP32 SMT_OUT_LEVER1
TP30 SMT_OUT_TWIST1
TP28 SMT_OUT_ROCKER1
TP26 SMT_OUT_TWIST2
TP25 SMT_OUT_ROCKER2
TP27 SMT_OUT_LEVER2

U45, U44, U40: TLC272CP

NOT FITTED

BLOCK PATHNAME	$PROJECT_EVEREST/sibv5_ASM/sibv5			BLOCK SHT 8 OF 12		
REV 1 PCN XXXXXXXX	DESCRIPTION XXXXXXXXXXXXXXXXXXXXXXXXXXXXXXXXXX					
MADE BY NAME	DATE DD/MM/YY	APPR BY NAME	DATE DD/MM/YY	MADE SEAL IND.	DATE 18/02/00	GE Medical Systems BUC - FRANCE
REV 2 PCN XXXXXXXX	DESCRIPTION XXXXXXXXXXXXXXXXXXXXXXXXXXXXXXXXXX			CHECK JOURDHEUIL	DATE 18/02/00	DESIGN TITLE SYSTEM INTERFACE BOARD
MADE BY NAME	DATE DD/MM/YY	APPR BY NAME	DATE DD/MM/YY	APPR RAUBY	DATE 18/02/00	FIRST MADE FOR EVEREST
				OTHER NAME	DATE DD/MM/YY	DRAWING NO. 2267936CH / REV A / SIZE 3 / SHT/CONT. ON 8 / 12

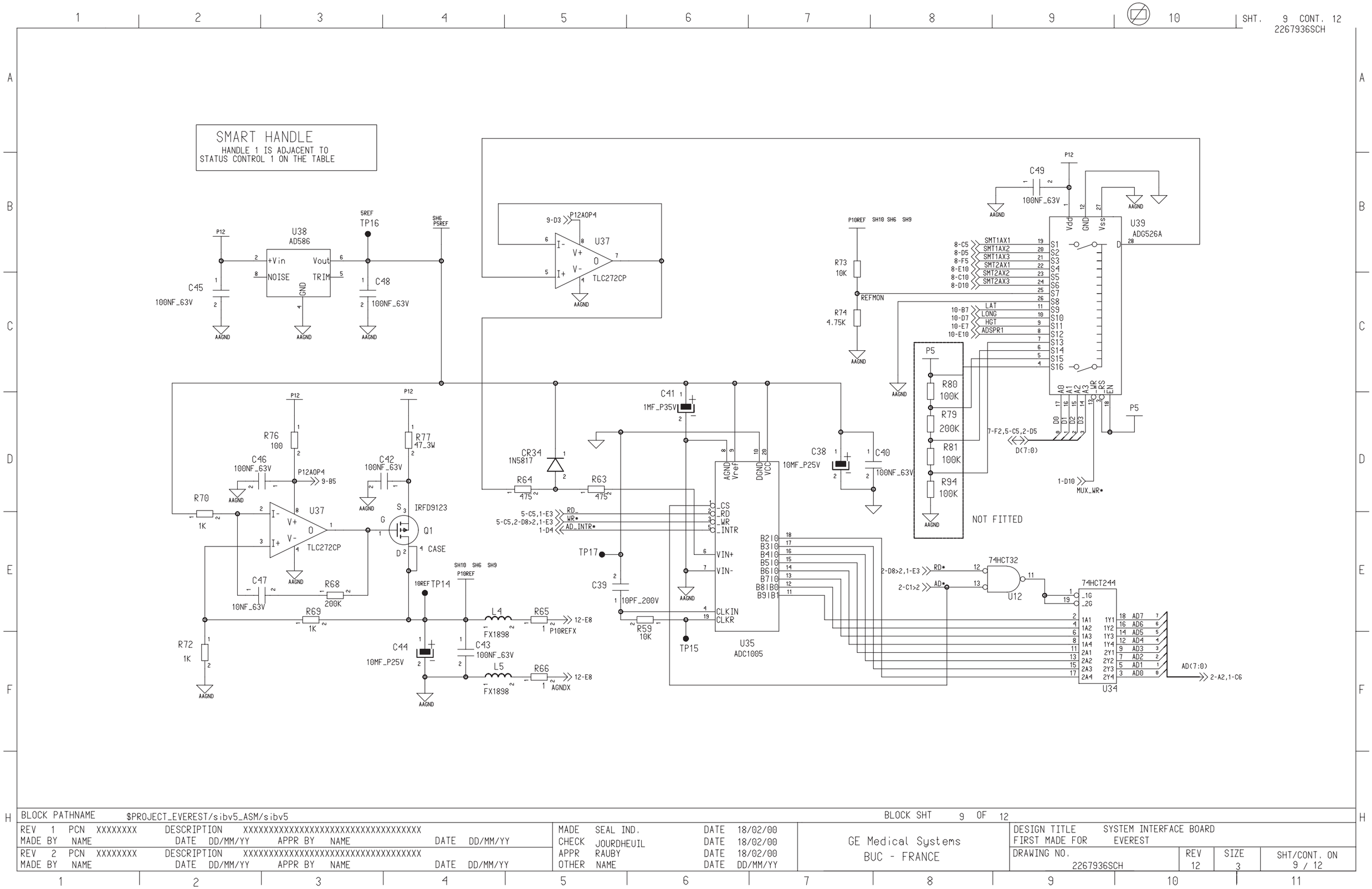
SHT. 9 CONT. 12
2267936SCH
SMART HANDLE
HANDLE 1 IS ADJACENT TO
STATUS CONTROL 1 ON THE TABLE
U38
AD586
U37
TLC272CP
U39
ADG526A
U35
ADC1005
U34
74HCT32
U12
74HCT244
Q1
IRFD9123
NOT FITTED
BLOCK PATHNAME $PROJECT_EVEREST/sibv5_ASM/sibv5
BLOCK SHT 9 OF 12
REV 1 PCN XXXXXXXX DESCRIPTION XXXXXXXXXXXXXXXXXXXXXXXXXXXXXXXXXXXX
MADE BY NAME DATE DD/MM/YY APPR BY NAME DATE DD/MM/YY
REV 2 PCN XXXXXXXX DESCRIPTION XXXXXXXXXXXXXXXXXXXXXXXXXXXXXXXXXXXX
MADE BY NAME DATE DD/MM/YY APPR BY NAME DATE DD/MM/YY
MADE SEAL IND. DATE 18/02/00
CHECK JOURDHEUIL DATE 18/02/00
APPR RAUBY DATE 18/02/00
OTHER NAME DATE DD/MM/YY
GE Medical Systems
BUC - FRANCE
DESIGN TITLE SYSTEM INTERFACE BOARD
FIRST MADE FOR EVEREST
DRAWING NO. 2267936SCH
REV 12
SIZE 3
SHT/CONT. ON 9 / 12

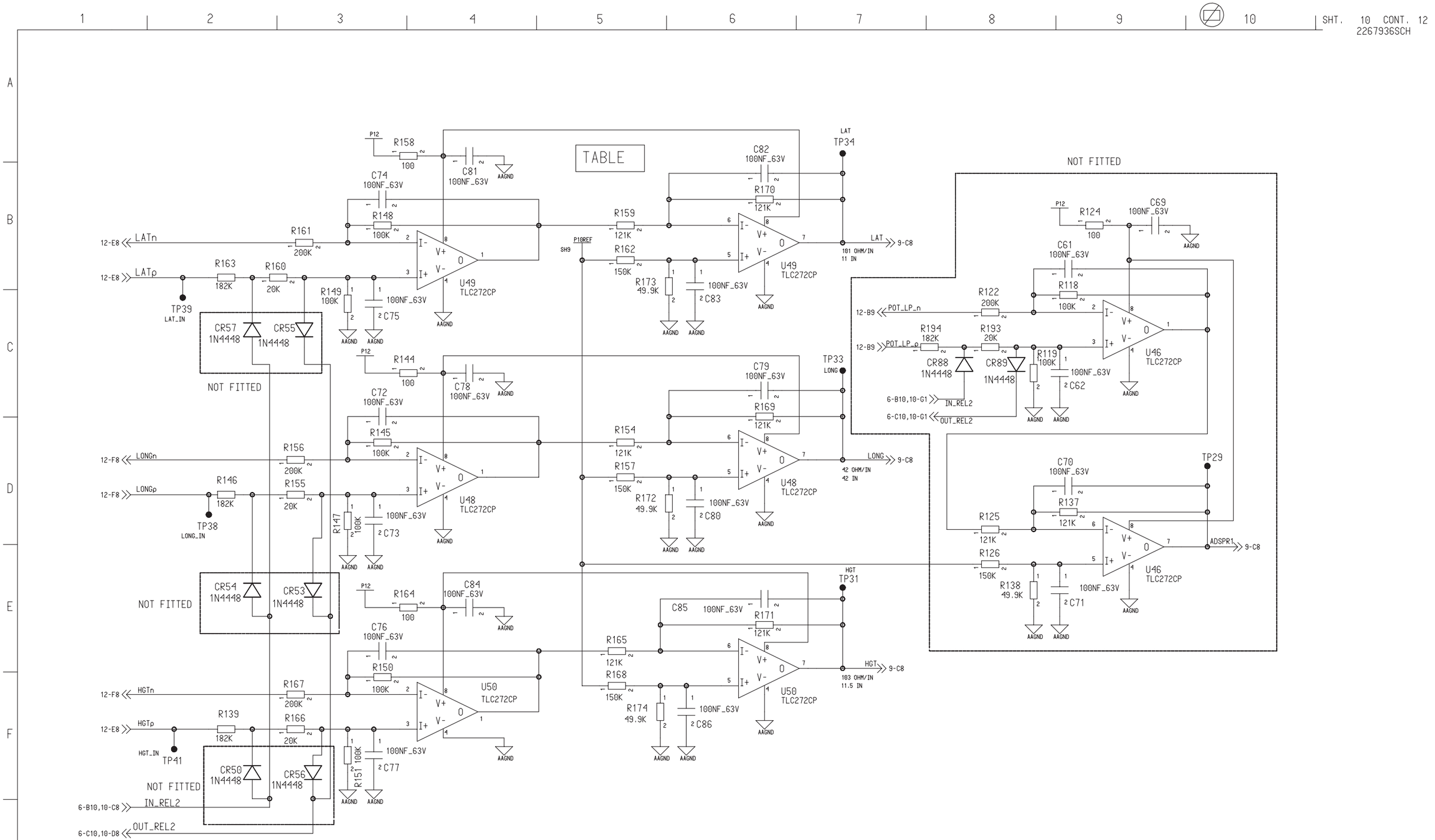

BLOCK PATHNAME $PROJECT_EVEREST/sibv5_ASM/sibv5				BLOCK SHT 10 OF 12	
REV 1 PCN XXXXXXXX DESCRIPTION XXXXXXXXXXXXXXXXXXXXXXXXXXXXXXXXXX MADE BY NAME DATE DD/MM/YY APPR BY NAME DATE DD/MM/YY	MADE SEAL IND. DATE 18/02/00 CHECK JOURDHEUIL DATE 18/02/00 APPR RAUBY DATE 18/02/00 OTHER NAME DATE DD/MM/YY	GE Medical Systems BUC - FRANCE	DESIGN TITLE SYSTEM INTERFACE BOARD FIRST MADE FOR EVEREST		
REV 2 PCN XXXXXXXX DESCRIPTION XXXXXXXXXXXXXXXXXXXXXXXXXXXXXXXXXX MADE BY NAME DATE DD/MM/YY APPR BY NAME DATE DD/MM/YY			DRAWING NO. 2267936SCH	REV A	SIZE 3	SHT/CONT. ON 10 / 12

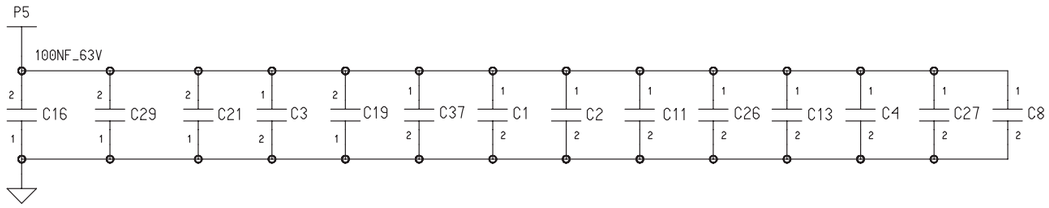

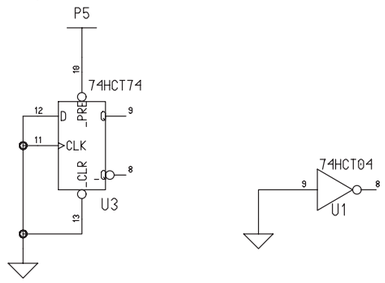

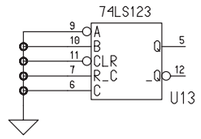

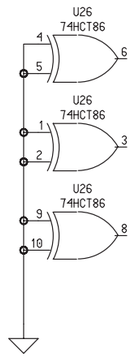

BLOCK PATHNAME $PROJECT_EVEREST/sibv5_ASM/sibv5				BLOCK SHT 11 OF 12	
REV 1 PCN XXXXXXXX DESCRIPTION XXXXXXXXXXXXXXXXXXXXXXXXXXXXXXXXXX MADE BY NAME DATE DD/MM/YY APPR BY NAME DATE DD/MM/YY	MADE SEAL IND. DATE 18/02/00 CHECK JOURDHEUIL DATE 18/02/00 APPR RAUBY DATE 18/02/00 OTHER NAME DATE DD/MM/YY	GE Medical Systems BUC - FRANCE	DESIGN TITLE SYSTEM INTERFACE BOARD FIRST MADE FOR EVEREST		
REV 2 PCN XXXXXXXX DESCRIPTION XXXXXXXXXXXXXXXXXXXXXXXXXXXXXXXXXX MADE BY NAME DATE DD/MM/YY APPR BY NAME DATE DD/MM/YY			DRAWING NO. 2267936SCH	REV A	SIZE 3 / SHT/CONT. ON 11 / 12

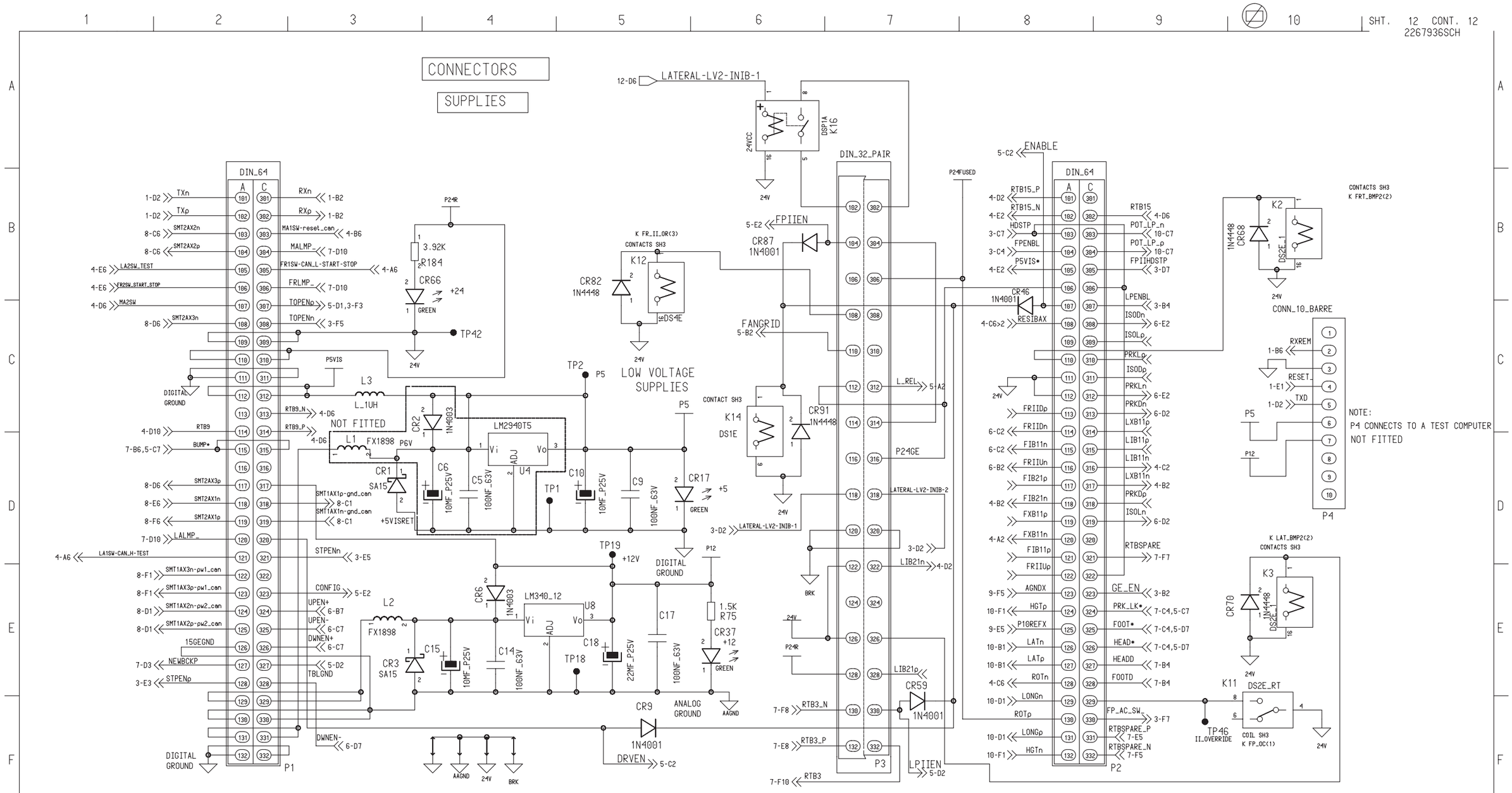

FRONTAL POSITIONER RACK

Blank page.

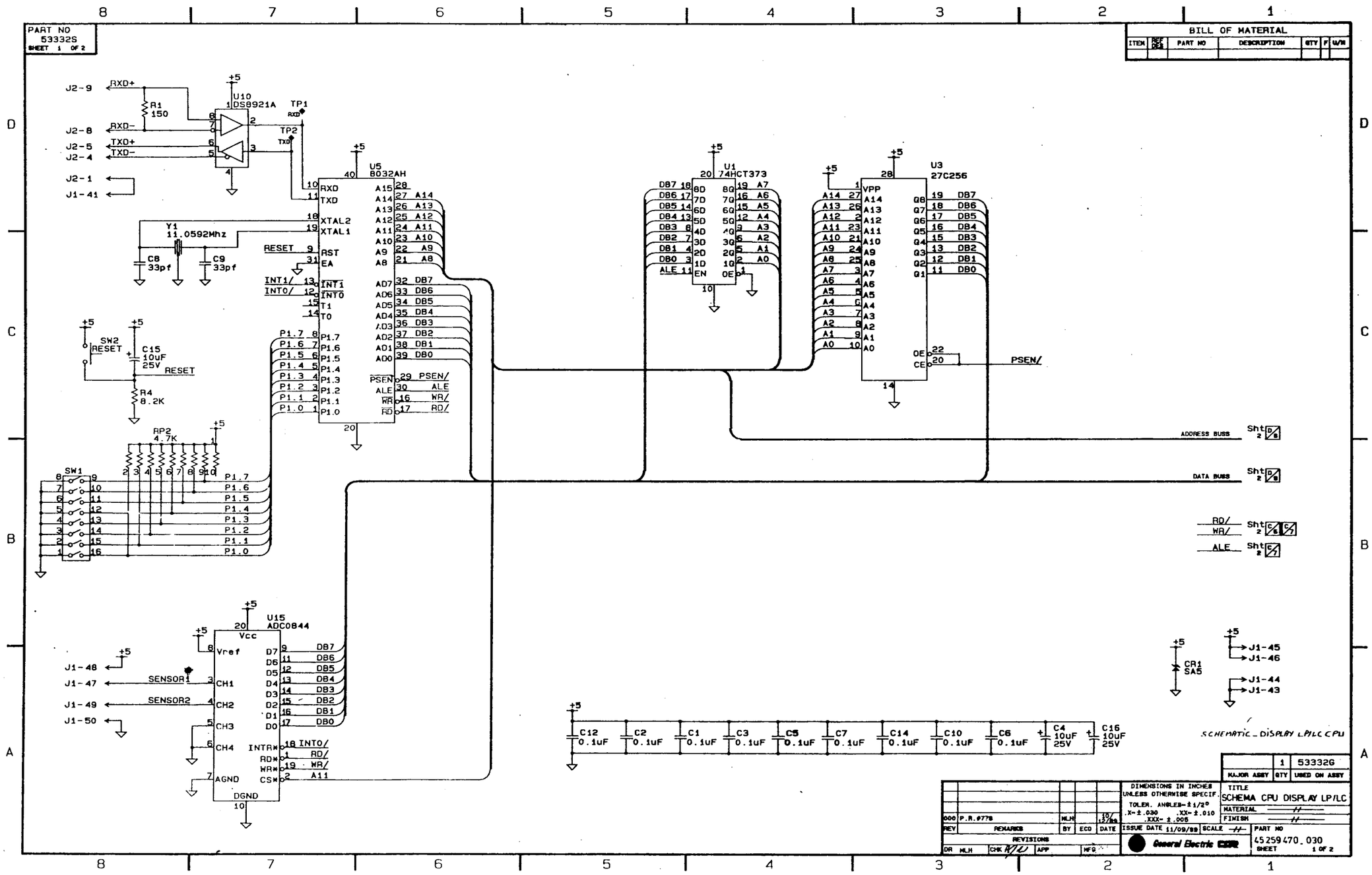
PART NO 53332S SHEET 1 OF 2
BILL OF MATERIAL
ITEM | REF DES | PART NO | DESCRIPTION | QTY | F | W/M
U10 DS8921A
U5 8032AH
U1 74HCT373
U3 27C256
U15 ADC0844
Y1 11.0592Mhz
C8 33pf
C9 33pf
C15 10uF 25V
R1 150
R4 8.2K
RP2 4.7K
SW1
SW2 RESET
TP1 RXD
TP2 TXD
RXD+
RXD-
TXD+
TXD-
RESET
SENSOR1
SENSOR2
PSEN/
ALE
WR/
RD/
INT0/
INT1/
A11
ADDRESS BUSS
DATA BUSS
CR1 SA5
C12 0.1uF
C2 0.1uF
C1 0.1uF
C3 0.1uF
C5 0.1uF
C7 0.1uF
C14 0.1uF
C10 0.1uF
C6 0.1uF
C4 10uF 25V
C16 10uF 25V
SCHEMATIC_DISPLAY LP/LC CPU
DIMENSIONS IN INCHES UNLESS OTHERWISE SPECIF.
TOLER. ANGLES- ±1/2°
.X- ±.030 .XX- ±.010 .XXX- ±.005
TITLE SCHEMA CPU DISPLAY LP/LC
MATERIAL
FINISH
ISSUE DATE 11/09/88 SCALE
PART NO 45259470_030
SHEET 1 OF 2
General Electric CSSD
000 P.R.9778 MLH 10/12/88
REVISIONS
DR MLH CHK APP MFG

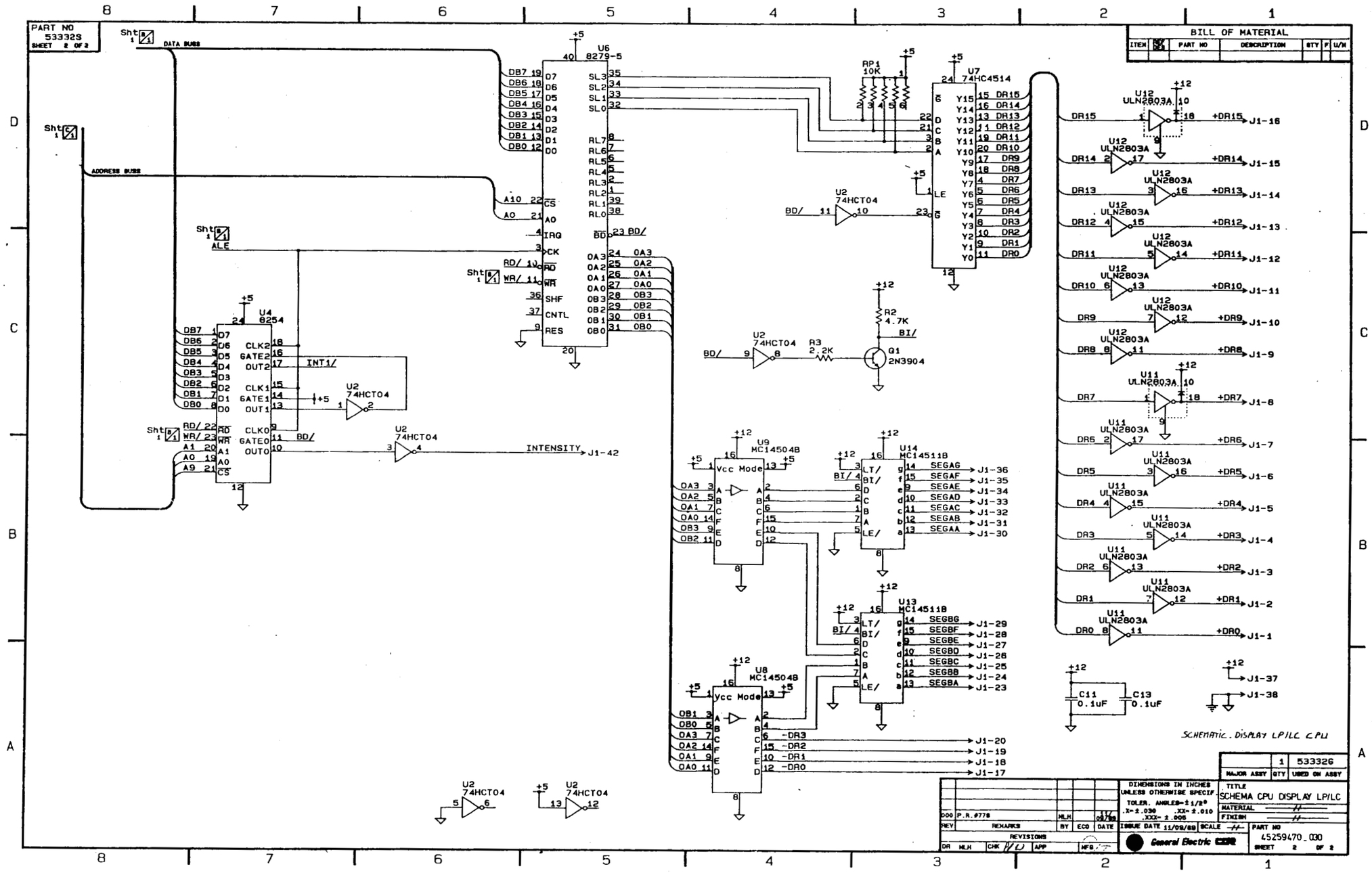
PART NO 53332S SHEET 2 OF 2
DATA BUSS
ADDRESS BUSS
ALE
U6 8279-5
U4 8254
U7 74HC4514
U2 74HCT04
RP1 10K
R2 4.7K
R3 2.2K
Q1 2N3904
U12 ULN2803A
U11 ULN2803A
U9 MC14504B
U8 MC14504B
U14 MC14511B
U13 MC14511B
INT1/
INTENSITY J1-42
C11 0.1uF
C13 0.1uF
SCHEMATIC. DISPLAY LP/LC CPU
BILL OF MATERIAL
SCHEMA CPU DISPLAY LP/LC
45259470_000
General Electric

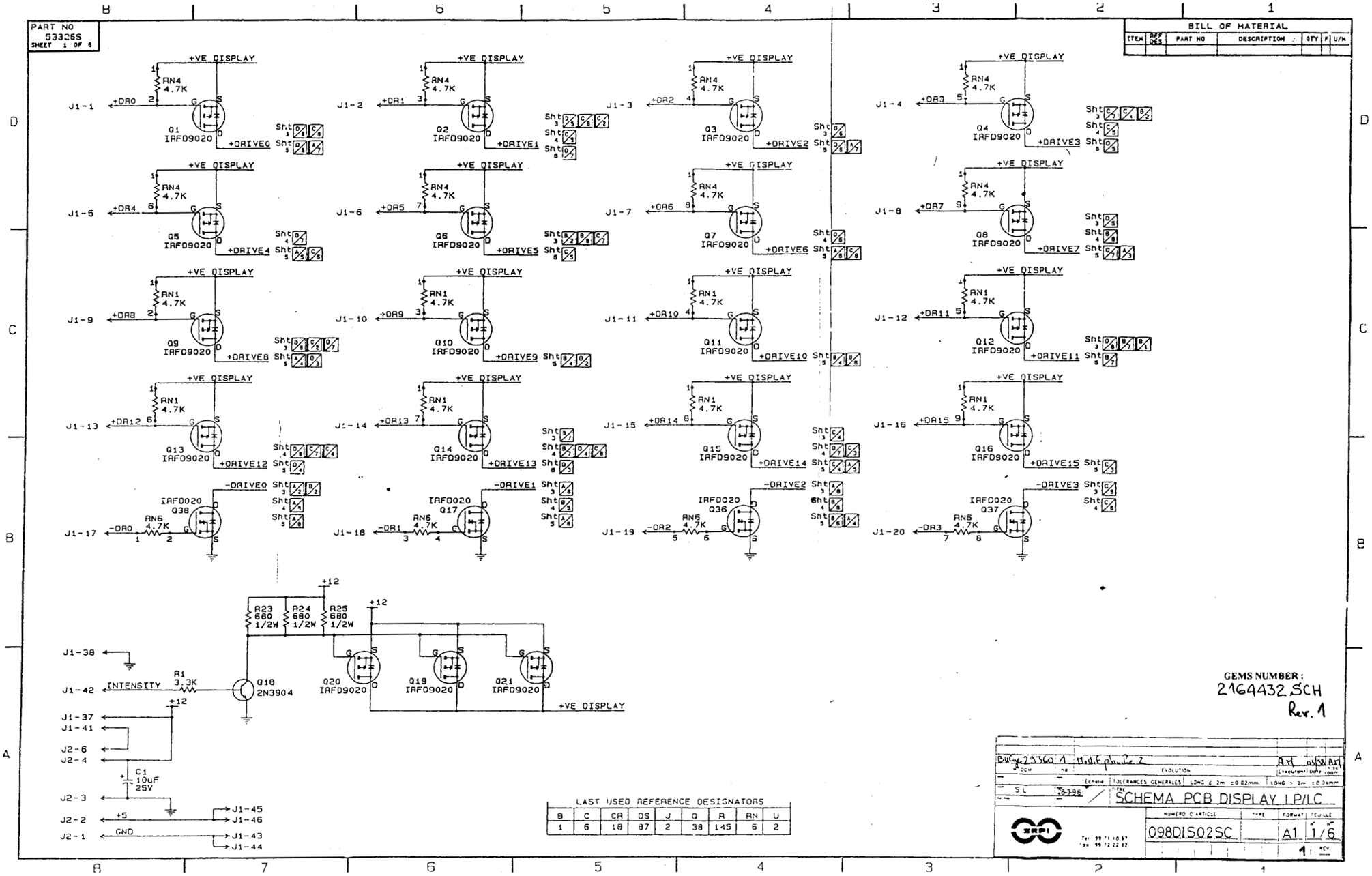
PART NO 5330SS
SHEET 1 OF 5
BILL OF MATERIAL
ITEM
REF DES
PART NO
DESCRIPTION
QTY
F
U/M
+VE DISPLAY
RN4 4.7K
RN1 4.7K
RN6 4.7K
IRFD9020
IRFD0020
2N3904
J1-1
J1-2
J1-3
J1-4
J1-5
J1-6
J1-7
J1-8
J1-9
J1-10
J1-11
J1-12
J1-13
J1-14
J1-15
J1-16
J1-17
J1-18
J1-19
J1-20
+DA0
+DA1
+DA2
+DA3
+DA4
+DA5
+DA6
+DA7
+DA8
+DA9
+DA10
+DA11
+DA12
+DA13
+DA14
+DA15
-DA0
-DA1
-DA2
-DA3
+DRIVE0
+DRIVE1
+DRIVE2
+DRIVE3
+DRIVE4
+DRIVE5
+DRIVE6
+DRIVE7
+DRIVE8
+DRIVE9
+DRIVE10
+DRIVE11
+DRIVE12
+DRIVE13
+DRIVE14
+DRIVE15
-DRIVE0
-DRIVE1
-DRIVE2
-DRIVE3
Q1
Q2
Q3
Q4
Q5
Q6
Q7
Q8
Q9
Q10
Q11
Q12
Q13
Q14
Q15
Q16
Q38
Q17
Q36
Q37
Q18
Q20
Q19
Q21
R23 680 1/2W
R24 680 1/2W
R25 680 1/2W
R1 3.3K
INTENSITY
+12
J1-38
J1-42
J1-37
J1-41
J2-6
J2-4
C1 10uF 25V
J2-3
J2-2
J2-1
+5
GND
J1-45
J1-46
J1-43
J1-44
+VE DISPLAY
LAST USED REFERENCE DESIGNATORS
B C CR DS J Q R RN U
1 6 18 87 2 38 145 6 2
GEMS NUMBER :
2164432 SCH
Rev. 1
SCHEMA PCB DISPLAY LP/LC
0980IS02SC
A1
1/6
FRONTAL POSITIONER RACK

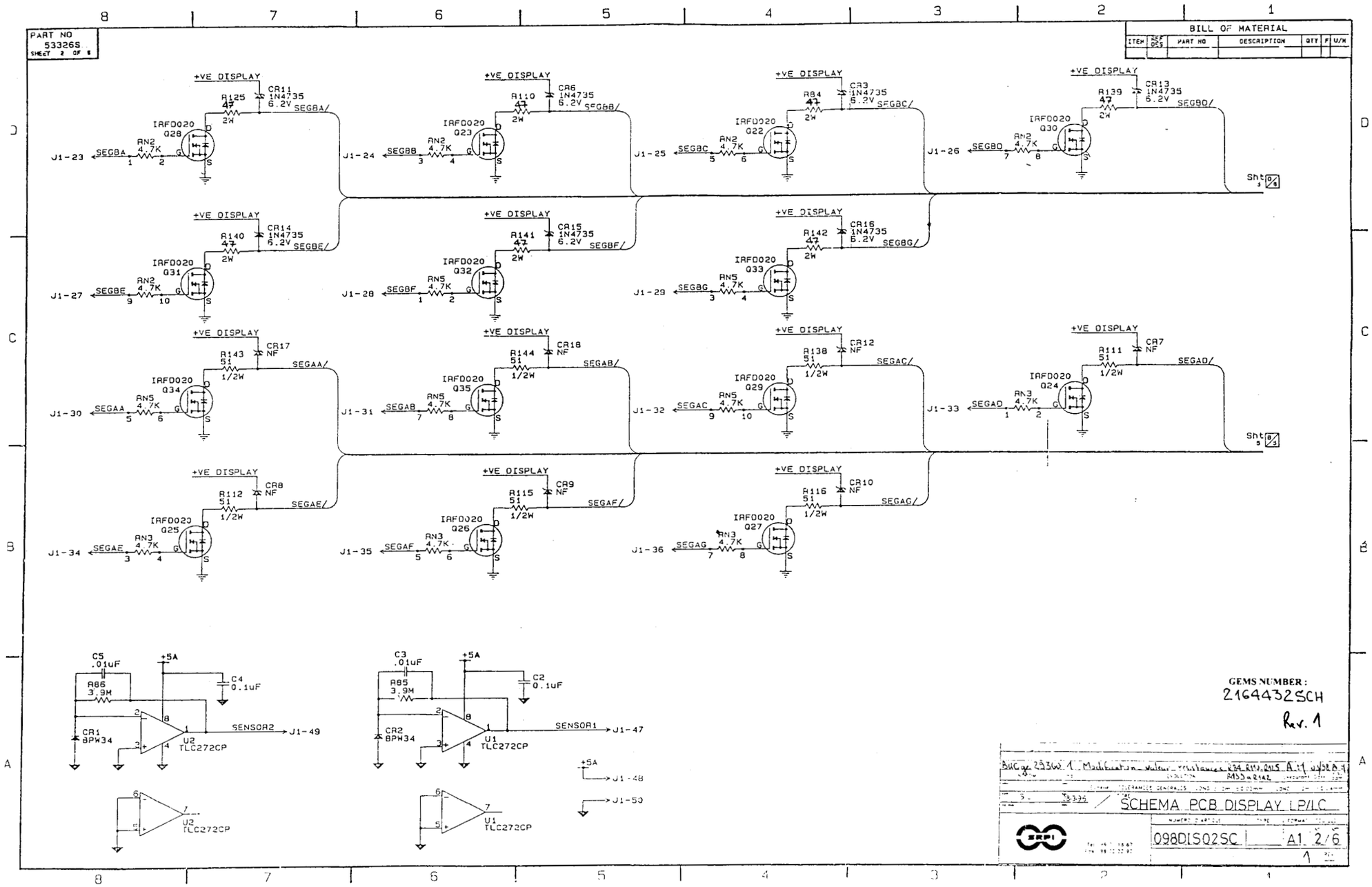
PART NO 53326S SHEET 2 OF 5
BILL OF MATERIAL
ITEM REF DES PART NO DESCRIPTION QTY F U/M
+VE DISPLAY
CR11 IN4735 6.2V
R125 47 2W
SEGBA/
IRFD020 Q28
RN2 4.7K
J1-23 SEGBA
CR6 IN4735 6.2V
R110 47 2W
SEGBB/
IRFD020 Q23
J1-24 SEGBB
CR3 IN4735 5.2V
R84 47 2W
SEGBC/
IRFD020 Q22
J1-25 SEGBC
CR13 IN4735 6.2V
R139 47 2W
SEGBD/
IRFD020 Q30
J1-26 SEGBD
Sht 3 0/4
CR14 IN4735 6.2V
R140 47 2W
SEGBE/
IRFD020 Q31
J1-27 SEGBE
CR15 IN4735 6.2V
R141 47 2W
SEGBF/
IRFD020 Q32
RN5 4.7K
J1-28 SEGBF
CR16 IN4735 6.2V
R142 47 2W
SEGBG/
IRFD020 Q33
J1-29 SEGBG
CR17 NF
R143 51 1/2W
SEGAA/
IRFD020 Q34
J1-30 SEGAA
CR18 NF
R144 51 1/2W
SEGAB/
IRFD020 Q35
J1-31 SEGAB
CR12 NF
R138 51 1/2W
SEGAC/
IRFD020 Q29
J1-32 SEGAC
CR7 NF
R111 51 1/2W
SEGAD/
IRFD020 Q24
RN3 4.7K
J1-33 SEGAD
Sht 5 0/3
CR8 NF
R112 51 1/2W
SEGAE/
IRFD020 Q25
J1-34 SEGAE
CR9 NF
R115 51 1/2W
SEGAF/
IRFD020 Q26
J1-35 SEGAF
CR10 NF
R116 51 1/2W
SEGAG/
IRFD020 Q27
J1-36 SEGAG
C5 .01uF
R86 3.9M
+5A
C4 0.1uF
CR1 BPW34
U2 TLC272CP
SENSOR2 J1-49
C3 .01uF
R85 3.9M
C2 0.1uF
CR2 BPW34
U1 TLC272CP
SENSOR1 J1-47
+5A J1-48
J1-50
GEMS NUMBER :
2164432SCH
Rev. 1
SCHEMA PCB DISPLAY LP/LC
098DIS02SC
A1 2/6

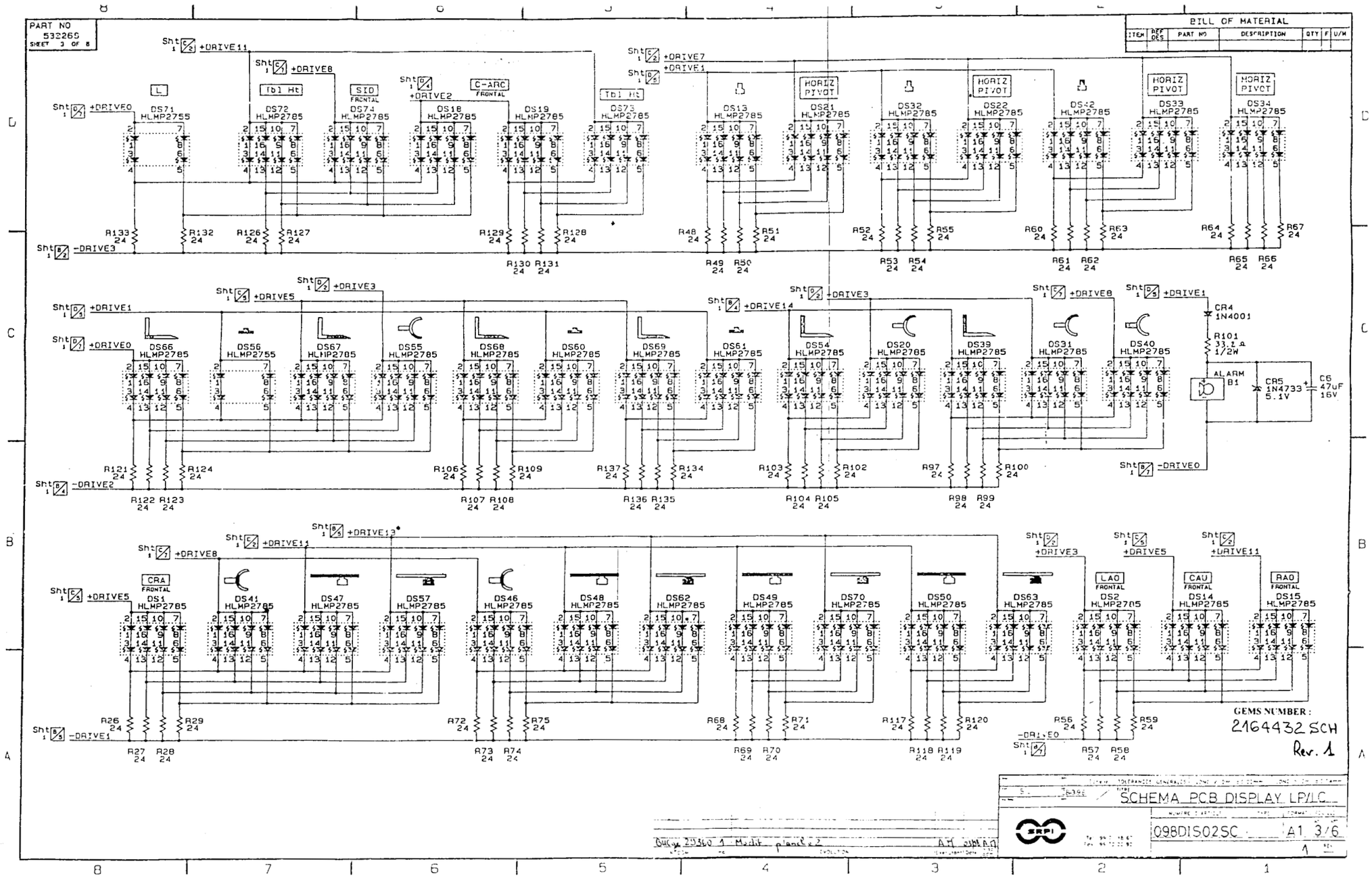

FRONTAL POSITIONER RACK

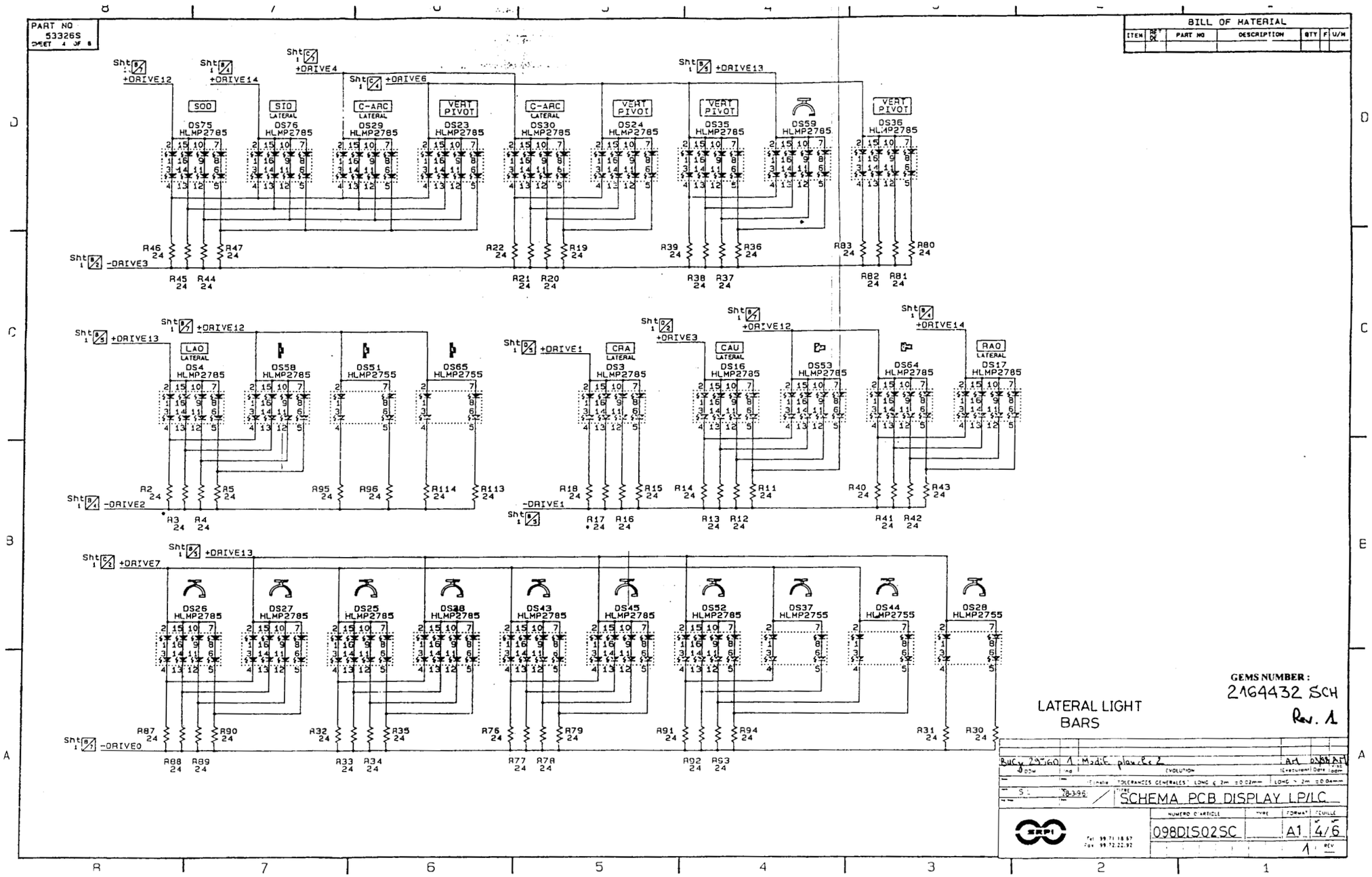
PART NO 53326S
SHEET 4 OF 8
BILL OF MATERIAL
ITEM
REF DES
PART NO
DESCRIPTION
QTY
F
U/M
+DRIVE12
+DRIVE14
+DRIVE4
+DRIVE6
+DRIVE13
-DRIVE3
SOO
SIO
LATERAL
C-ARC
VERT PIVOT
DS75 HLMP2785
DS76 HLMP2785
DS29 HLMP2785
DS23 HLMP2785
DS30 HLMP2785
DS24 HLMP2785
DS35 HLMP2785
DS59 HLMP2785
DS36 HLMP2785
R46 24
R47 24
R45 24
R44 24
R22 24
R19 24
R21 24
R20 24
R39 24
R36 24
R38 24
R37 24
R83 24
R80 24
R82 24
R81 24
+DRIVE13
+DRIVE12
LAO
LATERAL
DS4 HLMP2785
DS58 HLMP2785
DS51 HLMP2755
DS65 HLMP2755
+DRIVE1
CRA
LATERAL
DS3 HLMP2785
+DRIVE3
CAU
LATERAL
DS16 HLMP2785
DS53 HLMP2785
+DRIVE12
+DRIVE14
RAO
LATERAL
DS64 HLMP2785
DS17 HLMP2785
R2 24
R5 24
R95 24
R96 24
R114 24
R113 24
-DRIVE2
R3 24
R4 24
R18 24
R15 24
-DRIVE1
R17 24
R16 24
R14 24
R11 24
R13 24
R12 24
R40 24
R43 24
R41 24
R42 24
+DRIVE13
+DRIVE7
DS26 HLMP2785
DS27 HLMP2785
DS25 HLMP2785
DS38 HLMP2785
DS43 HLMP2785
DS45 HLMP2785
DS52 HLMP2785
DS37 HLMP2755
DS44 HLMP2755
DS28 HLMP2755
-DRIVE0
R87 24
R90 24
R88 24
R89 24
R32 24
R35 24
R33 24
R34 24
R76 24
R79 24
R77 24
R78 24
R91 24
R94 24
R92 24
R93 24
R31 24
R30 24
GEMS NUMBER :
2164432 SCH
Rev. 1
LATERAL LIGHT BARS
SCHEMA PCB DISPLAY LP/LC
098DIS02SC
A1
4/6

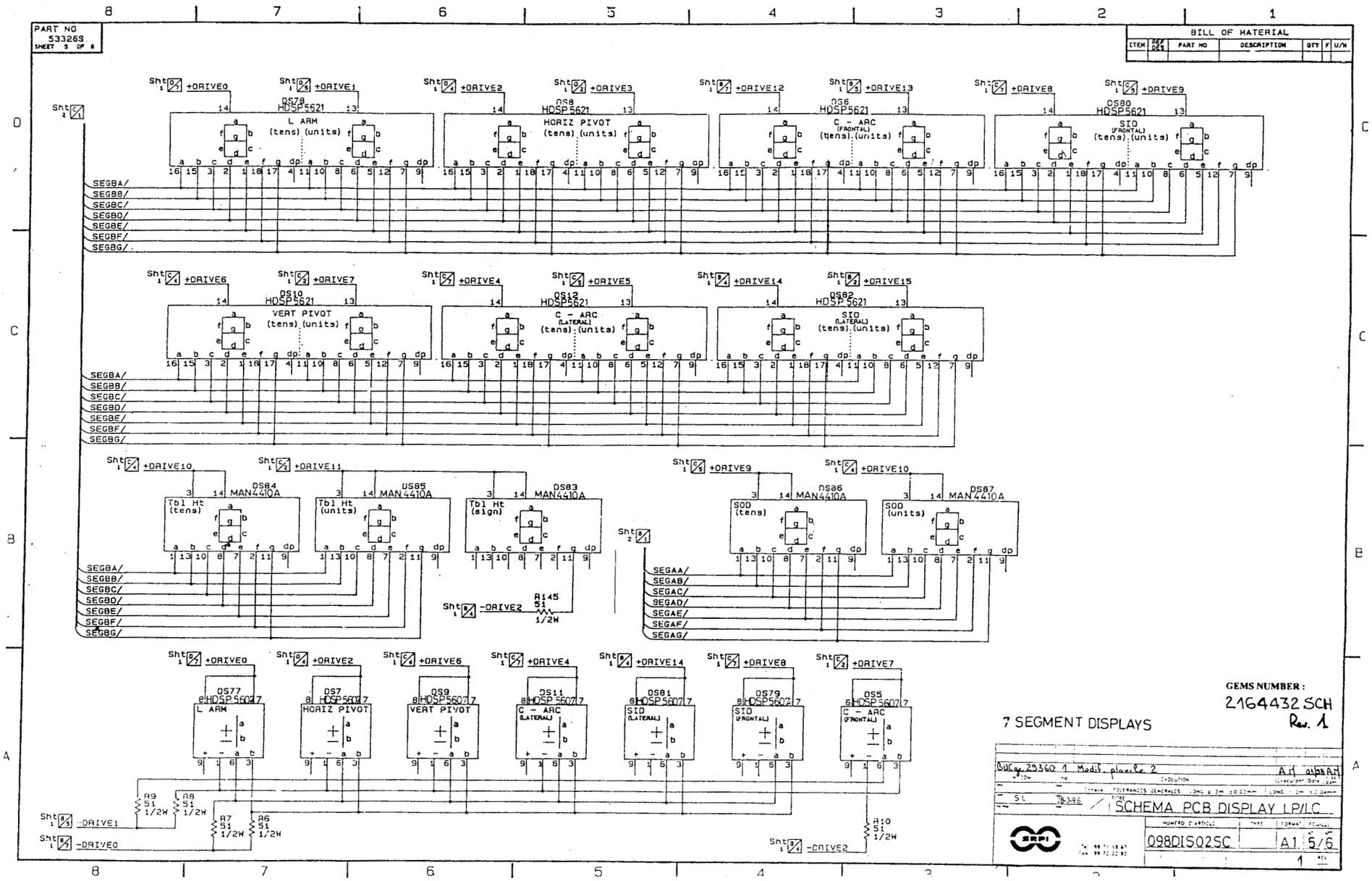
PART NO 53326S
SHEET 3 OF 6
BILL OF MATERIAL
ITEM
REF DES
PART NO
DESCRIPTION
QTY
F
U/M
+DRIVE0
+DRIVE1
+DRIVE2
+DRIVE3
+DRIVE12
+DRIVE13
+DRIVE8
+DRIVE9
OS78 HDSP5621
OS8 HDSP5621
OS6 HDSP5621
OS80 HDSP5621
L ARM (tens) (units)
HORIZ PIVOT (tens) (units)
C - ARC (FRONTAL) (tens) (units)
SID (FRONTAL) (tens) (units)
SEGBA/
SEGBB/
SEGBC/
SEGBD/
SEGBE/
SEGBF/
SEGBG/
+DRIVE6
+DRIVE7
+DRIVE4
+DRIVE5
+DRIVE14
+DRIVE15
OS10 HDSP5621
OS12 HDSP5621
OS82 HDSP5621
VERT PIVOT (tens) (units)
C - ARC (LATERAL) (tens) (units)
SID (LATERAL) (tens) (units)
+DRIVE10
+DRIVE11
+DRIVE9
+DRIVE10
OS84 MAN4410A
OS85 MAN4410A
OS83 MAN4410A
OS86 MAN4410A
OS87 MAN4410A
Tbl Ht (tens)
Tbl Ht (units)
Tbl Ht (sign)
SOD (tens)
SOD (units)
SEGAA/
SEGAB/
SEGAC/
SEGAD/
SEGAE/
SEGAF/
SEGAG/
-DRIVE2
R145 51 1/2W
+DRIVE0
+DRIVE2
+DRIVE6
+DRIVE4
+DRIVE14
+DRIVE8
+DRIVE7
OS77 HDSP5607
OS7 HDSP5607
OS9 HDSP5607
OS11 HDSP5607
OS81 HDSP5607
OS79 HDSP5607
OS5 HDSP5607
L ARM
HORIZ PIVOT
VERT PIVOT
C - ARC (LATERAL)
SID (LATERAL)
SID (FRONTAL)
C - ARC (FRONTAL)
R9 51 1/2W
R8 51 1/2W
R7 51 1/2W
R6 51 1/2W
R10 51 1/2W
-DRIVE1
-DRIVE0
-DRIVE2
GEMS NUMBER :
2164432 SCH
Rev. 1
7 SEGMENT DISPLAYS
SCHEMA PCB DISPLAY LP/LC
098DIS02SC
A1 5/6

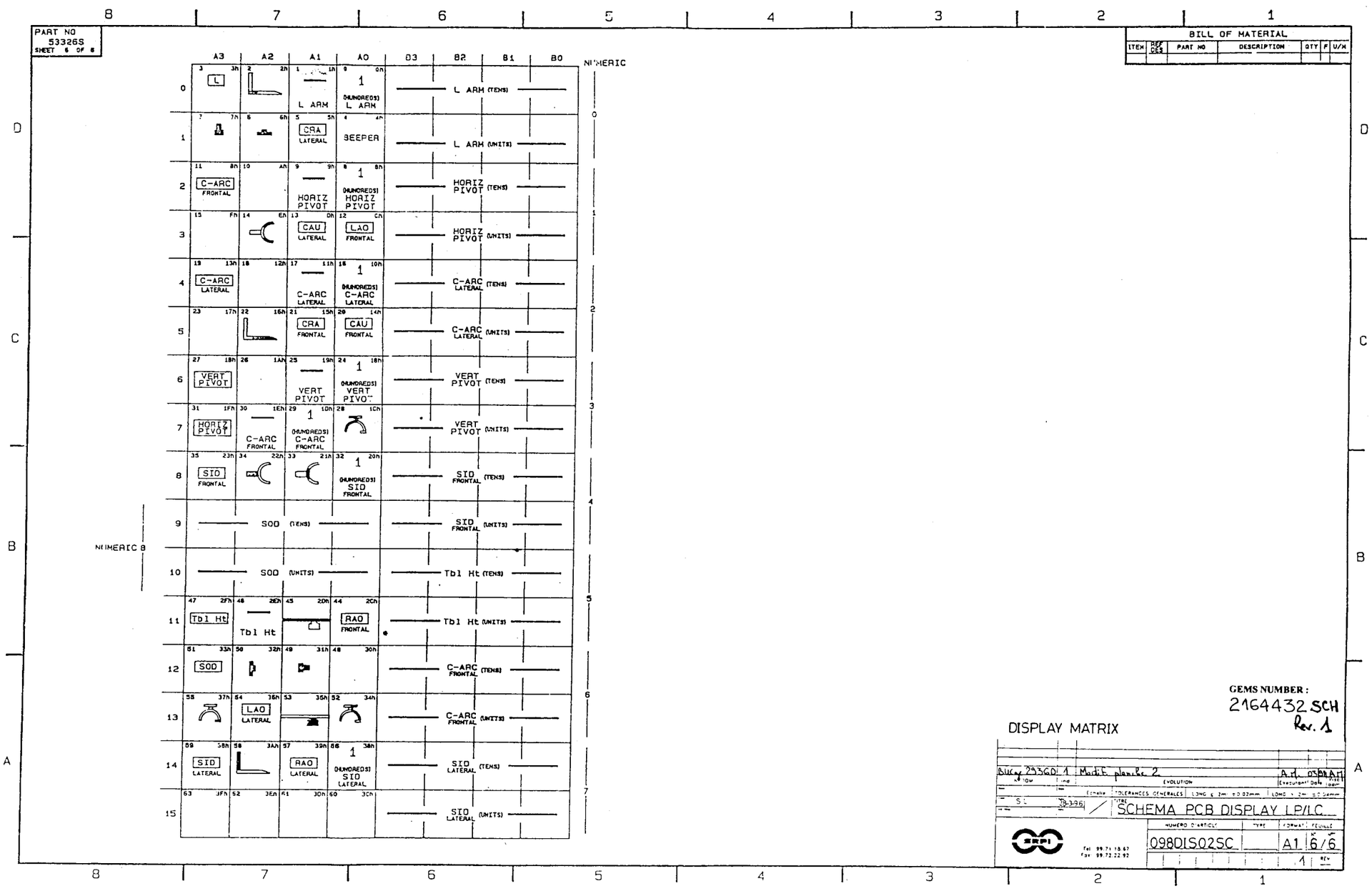
PART NO 53326S
SHEET 6 OF 8
BILL OF MATERIAL
ITEM
REF DES
PART NO
DESCRIPTION
QTY
F
U/M
A3
A2
A1
A0
B3
B2
B1
B0
NUMERIC
L
L ARM
1 (HUNDREDS) L ARM
L ARM (TENS)
CRA LATERAL
SWEEPER
L ARM (UNITS)
C-ARC FRONTAL
HORIZ PIVOT
1 (HUNDREDS) HORIZ PIVOT
HORIZ PIVOT (TENS)
CAU LATERAL
LAO FRONTAL
HORIZ PIVOT (UNITS)
C-ARC LATERAL
C-ARC (TENS) LATERAL
CRA FRONTAL
CAU FRONTAL
C-ARC (UNITS) LATERAL
VERT PIVOT
VERT PIVOT (TENS)
1 (HUNDREDS) VERT PIVOT
C-ARC FRONTAL
VERT PIVOT (UNITS)
SID FRONTAL
SID (TENS) FRONTAL
SOD
SID (UNITS) FRONTAL
SOD (TENS)
Tbl Ht (TENS)
SOD (UNITS)
Tbl Ht
RAO FRONTAL
Tbl Ht (UNITS)
C-ARC (TENS) FRONTAL
LAO LATERAL
C-ARC (UNITS) FRONTAL
RAO LATERAL
SID (TENS) LATERAL
SID (UNITS) LATERAL
GEMS NUMBER :
2164432 SCH
Rev. 1
DISPLAY MATRIX
SCHEMA PCB DISPLAY LP/LC
098DIS02SC
A1
6/6

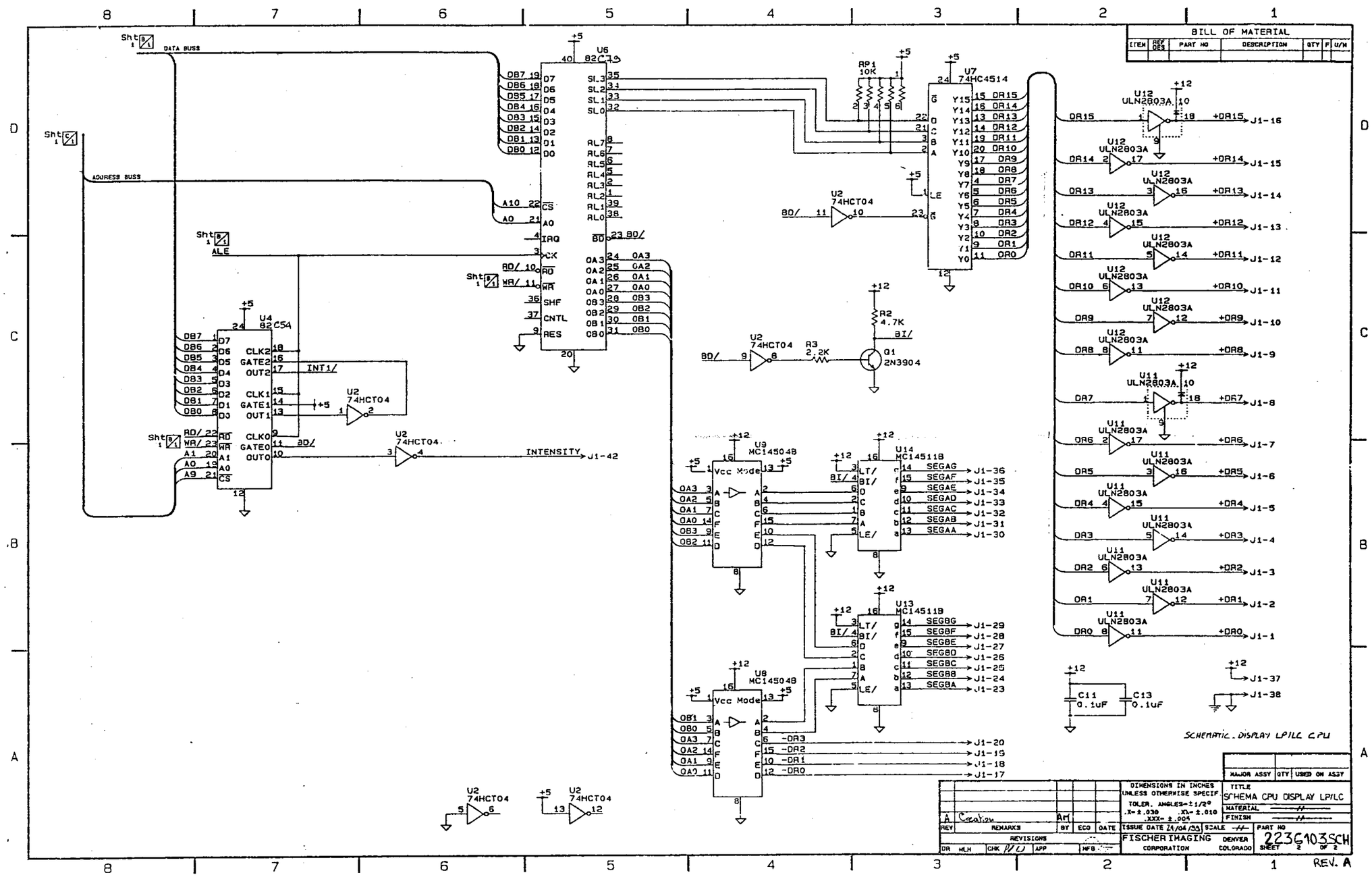
BILL OF MATERIAL
ITEM
REF DES
PART NO
DESCRIPTION
QTY
F
U/M
DATA BUSS
ADDRESS BUSS
ALE
INTENSITY
J1-42
SCHEMATIC - DISPLAY LP/LC CPU
SCHEMA CPU DISPLAY LP/LC
FISCHER IMAGING CORPORATION
DENVER COLORADO
223C103SCH
REV. A

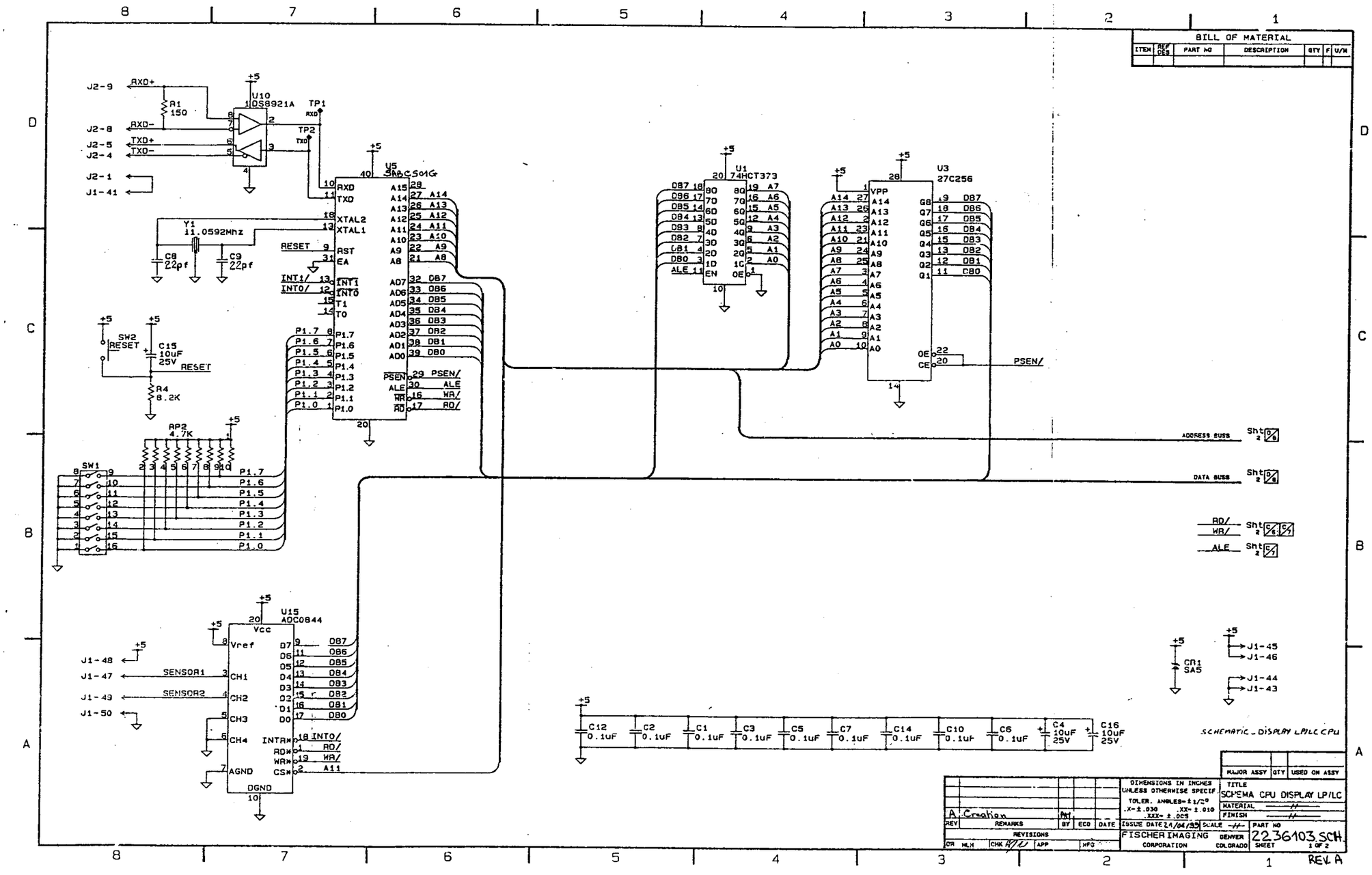
BILL OF MATERIAL
U10 DS8921A
U5 SABC501G
U1 74HCT373
U3 27C256
U15 ADC0844
Y1 11.0592Mhz
SW1
SW2 RESET
RP2 4.7K
ADDRESS BUSS
DATA BUSS
SCHEMATIC - DISPLAY LP/LC CPU
SCHEMA CPU DISPLAY LP/LC
FISCHER IMAGING CORPORATION
22 36103 SCH
REV A

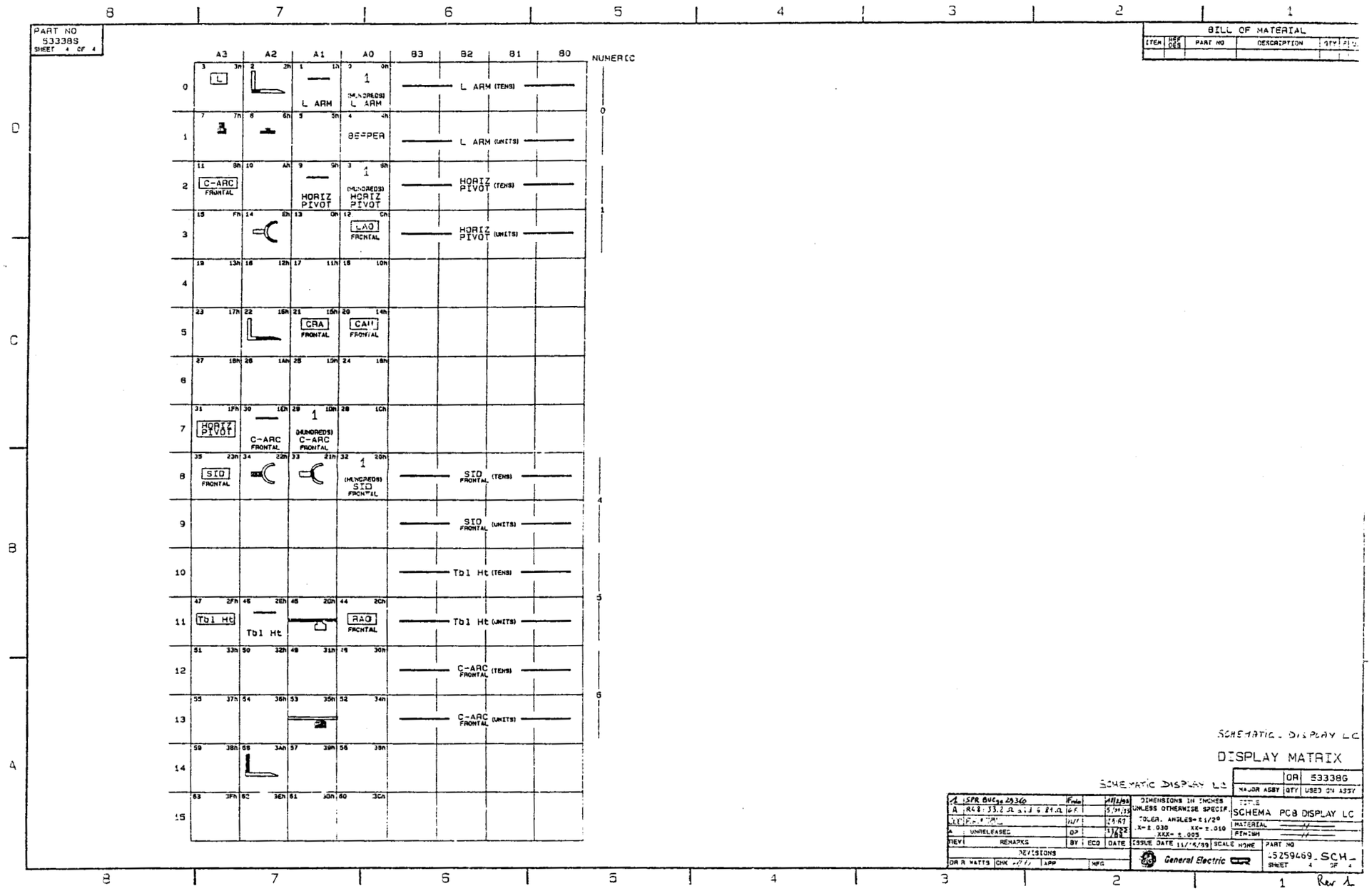

FRONTAL POSITIONER RACK

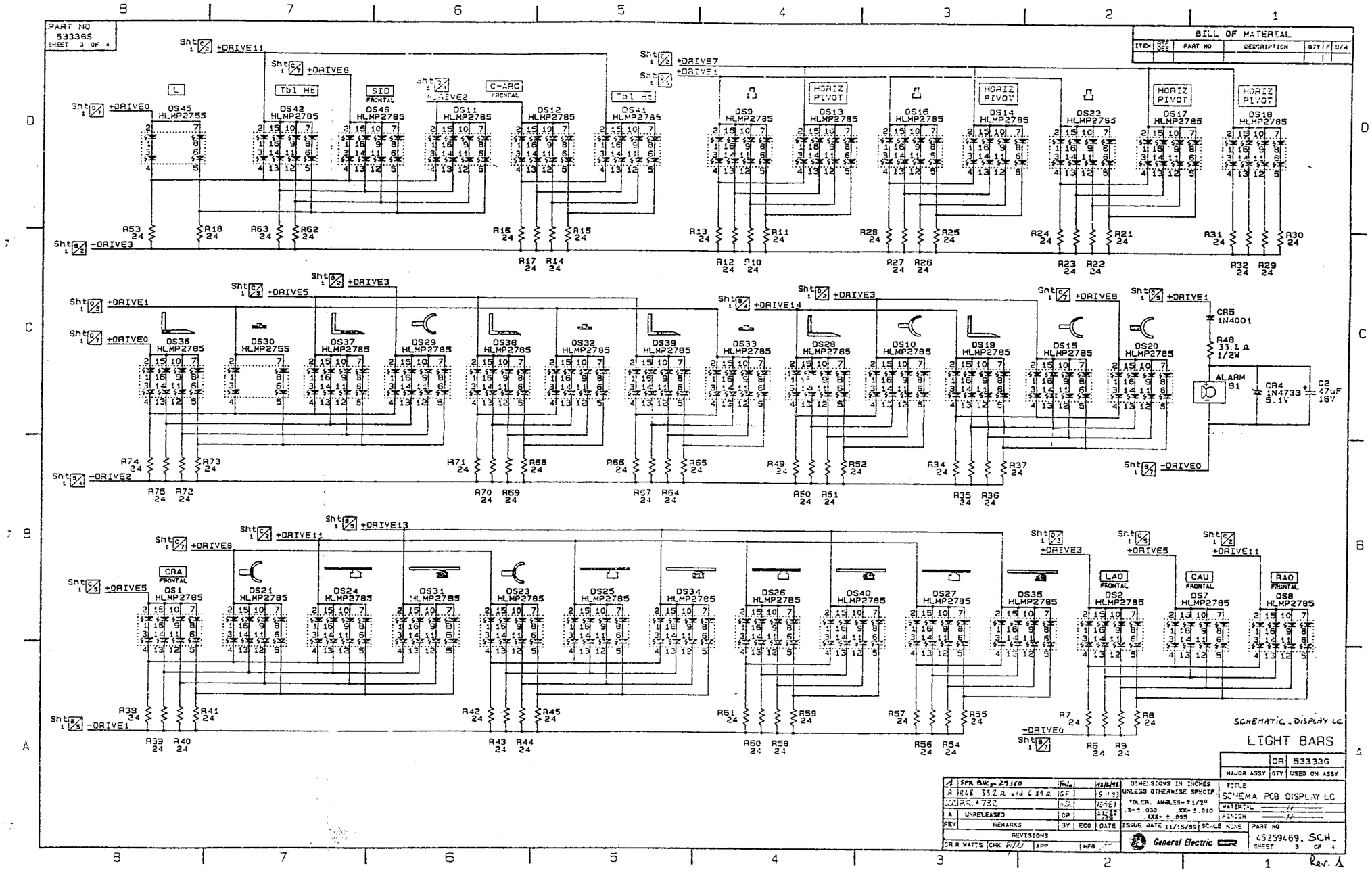
PART NO 53338S SHEET 3 OF 4
BILL OF MATERIAL
ITEM | REF DES | PART NO | DESCRIPTION | QTY | F | U/A
L
Tbl Ht
SID FRONTAL
C-ARC FRONTAL
HORIZ PIVOT
OS45 HLMP2755
OS42 HLMP2785
OS49 HLMP2785
OS11 HLMP2785
OS12 HLMP2785
OS41 HLMP2785
OS9 HLMP2785
OS13 HLMP2785
OS16 HLMP2785
OS14 HLMP2785
OS22 HLMP2785
OS17 HLMP2785
OS18 HLMP2785
OS36 HLMP2785
OS30 HLMP2755
OS37 HLMP2785
OS29 HLMP2785
OS38 HLMP2785
OS32 HLMP2785
OS39 HLMP2785
OS33 HLMP2785
OS28 HLMP2785
OS10 HLMP2785
OS19 HLMP2785
OS15 HLMP2785
OS20 HLMP2785
CR5 1N4001
R48 33.2 Ω 1/2W
ALARM B1
CR4 1N4733 5.1V
C2 47uF 16V
CRA FRONTAL
LAO FRONTAL
CAU FRONTAL
RAO FRONTAL
OS1 HLMP2785
OS21 HLMP2785
OS24 HLMP2785
OS31 HLMP2785
OS23 HLMP2785
OS25 HLMP2785
OS34 HLMP2785
OS26 HLMP2785
OS40 HLMP2785
OS27 HLMP2785
OS35 HLMP2785
OS2 HLMP2785
OS7 HLMP2785
OS8 HLMP2785
SCHEMATIC, DISPLAY LC
LIGHT BARS
OR 53333G
SCHEMA PCB DISPLAY LC
45259469. SCH.
General Electric

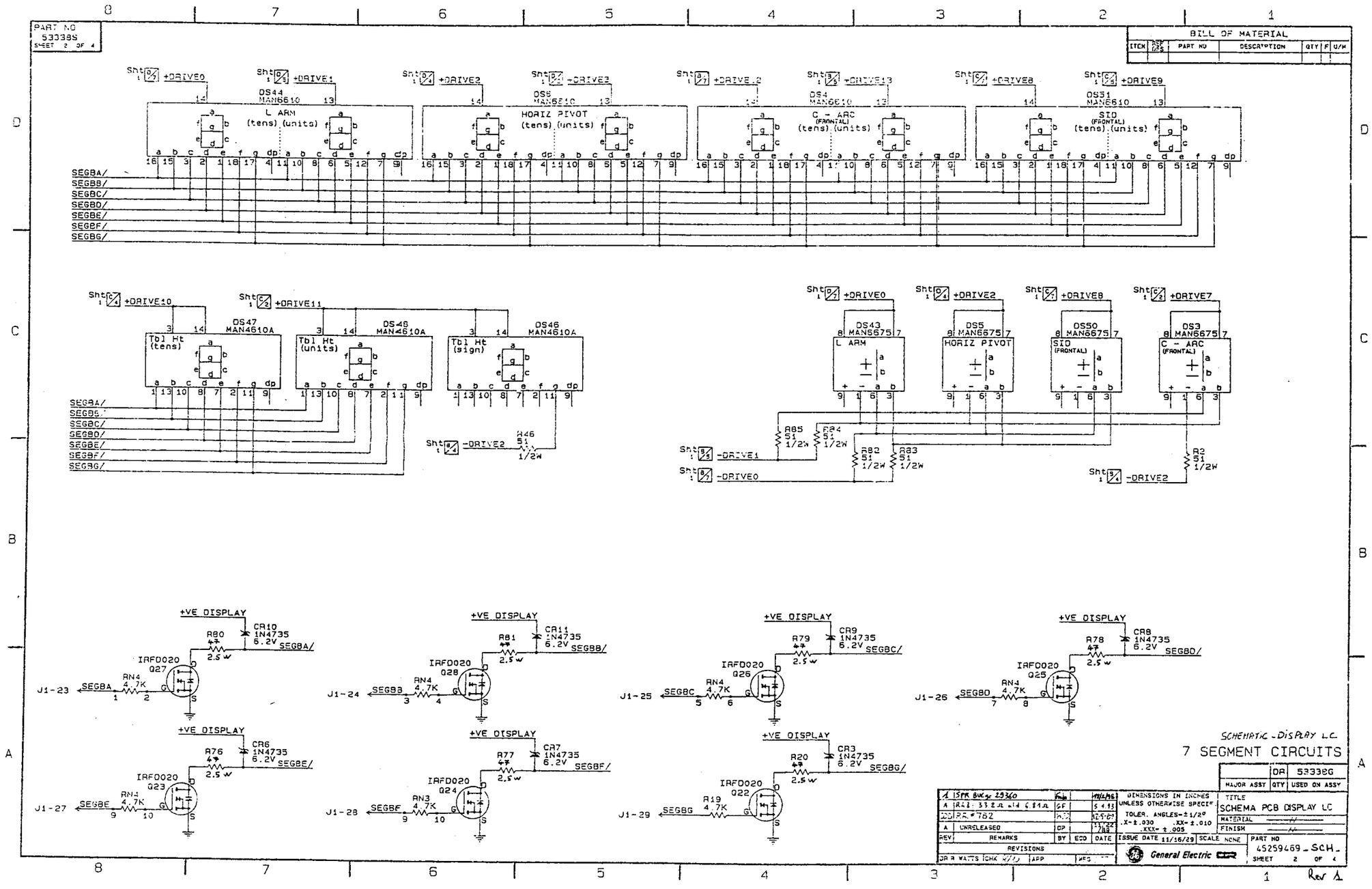

FRONTAL POSITIONER RACK

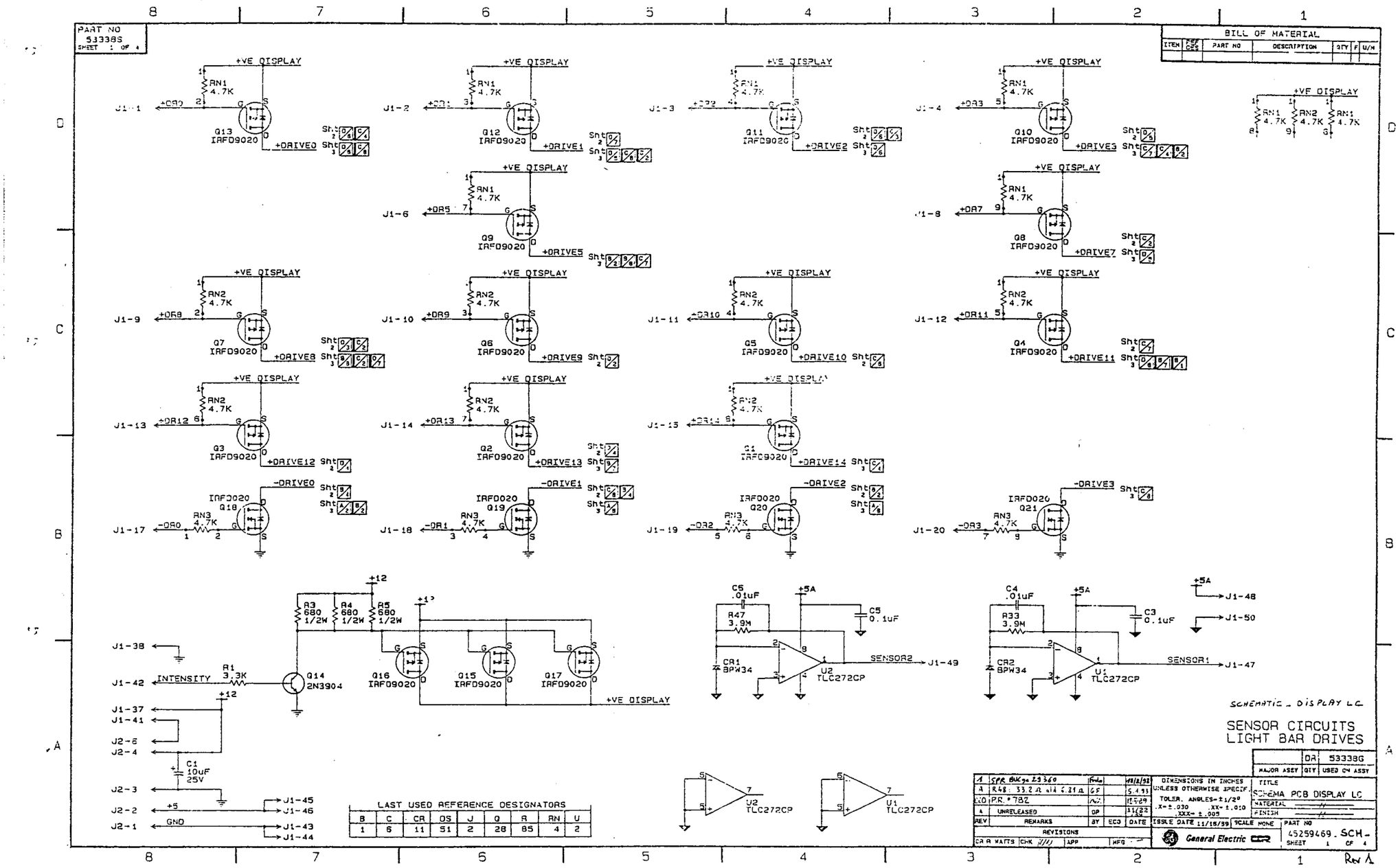
PART NO 53338S SHEET 1 OF 4
BILL OF MATERIAL
ITEM | REF DES | PART NO | DESCRIPTION | QTY | F | U/M
+VE DISPLAY
RN1 4.7K
RN2 4.7K
RN3 4.7K
Q13 IRFD9020
Q12 IRFD9020
Q11 IRFD9020
Q10 IRFD9020
Q9 IRFD9020
Q8 IRFD9020
Q7 IRFD9020
Q6 IRFD9020
Q5 IRFD9020
Q4 IRFD9020
Q3 IRFD9020
Q2 IRFD9020
Q1 IRFD9020
Q18 IRFD9020
Q19 IRFD9020
Q20 IRFD9020
Q21 IRFD9020
+DRIVE0
+DRIVE1
+DRIVE2
+DRIVE3
+DRIVE5
+DRIVE7
+DRIVE8
+DRIVE9
+DRIVE10
+DRIVE11
+DRIVE12
+DRIVE13
+DRIVE14
-DRIVE0
-DRIVE1
-DRIVE2
-DRIVE3
R3 680 1/2W
R4 680 1/2W
R5 680 1/2W
R1 3.3K
Q14 2N3904
Q16 IRFD9020
Q15 IRFD9020
Q17 IRFD9020
INTENSITY
C1 10uF 25V
C5 .01uF
R47 3.9M
C5 0.1uF
CR1 BPW34
U2 TLC272CP
SENSOR2
C4 .01uF
R33 3.9M
C3 0.1uF
CR2 BPW34
U1 TLC272CP
SENSOR1
SCHEMATIC - DISPLAY LC
SENSOR CIRCUITS
LIGHT BAR DRIVES
LAST USED REFERENCE DESIGNATORS
B | C | CR | DS | J | Q | R | RN | U
1 | 6 | 11 | 51 | 2 | 28 | 85 | 4 | 2
DA 53338G
SCHEMA PCB DISPLAY LC
45259469. SCH-
General Electric

3. LATERAL POSITIONER RACK

TITLE	DRAWING NUMBER	PAGE NUMBER
Backplane Lateral Board Wiring Changes	2238987 ADW	3–3
Backplane Lateral Board Circuit Diagram (1/6 to 6/6)	2225634 SCH	3–4 TO 3–9
Smart Amplifier Board Component Layout	See Frontal Pos. Rack	2–145
Smart Amplifier Board Circuit Diagram (1/8 to 8/8)	See Frontal Pos. Rack	2–146 TO 2–153
Supply and Park Command Board Component Layout	2211388 ADW	3–11
Supply and Park Command Board Circuit Diagram (1/4 to 4/4)	2211388 SCH	3–12 TO 3–15
Lateral Fuses Board Component Layout	2154139 ADW	3–17
Lateral Fuses Board Circuit Diagram (1/2 to 2/2)	2154139 SCH	3–18 TO 3–19

Blank page.

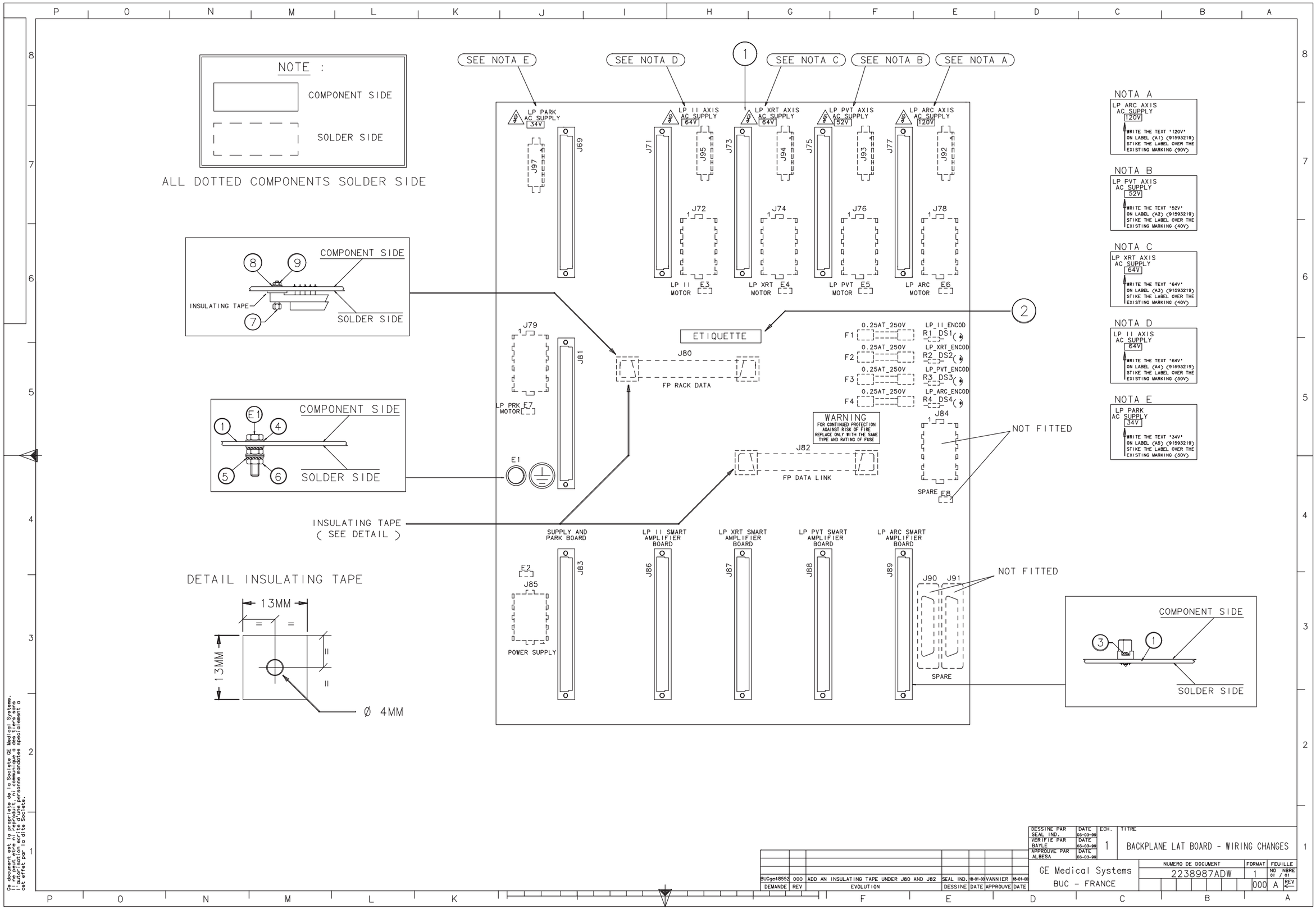

LATERAL POSITIONER RACK

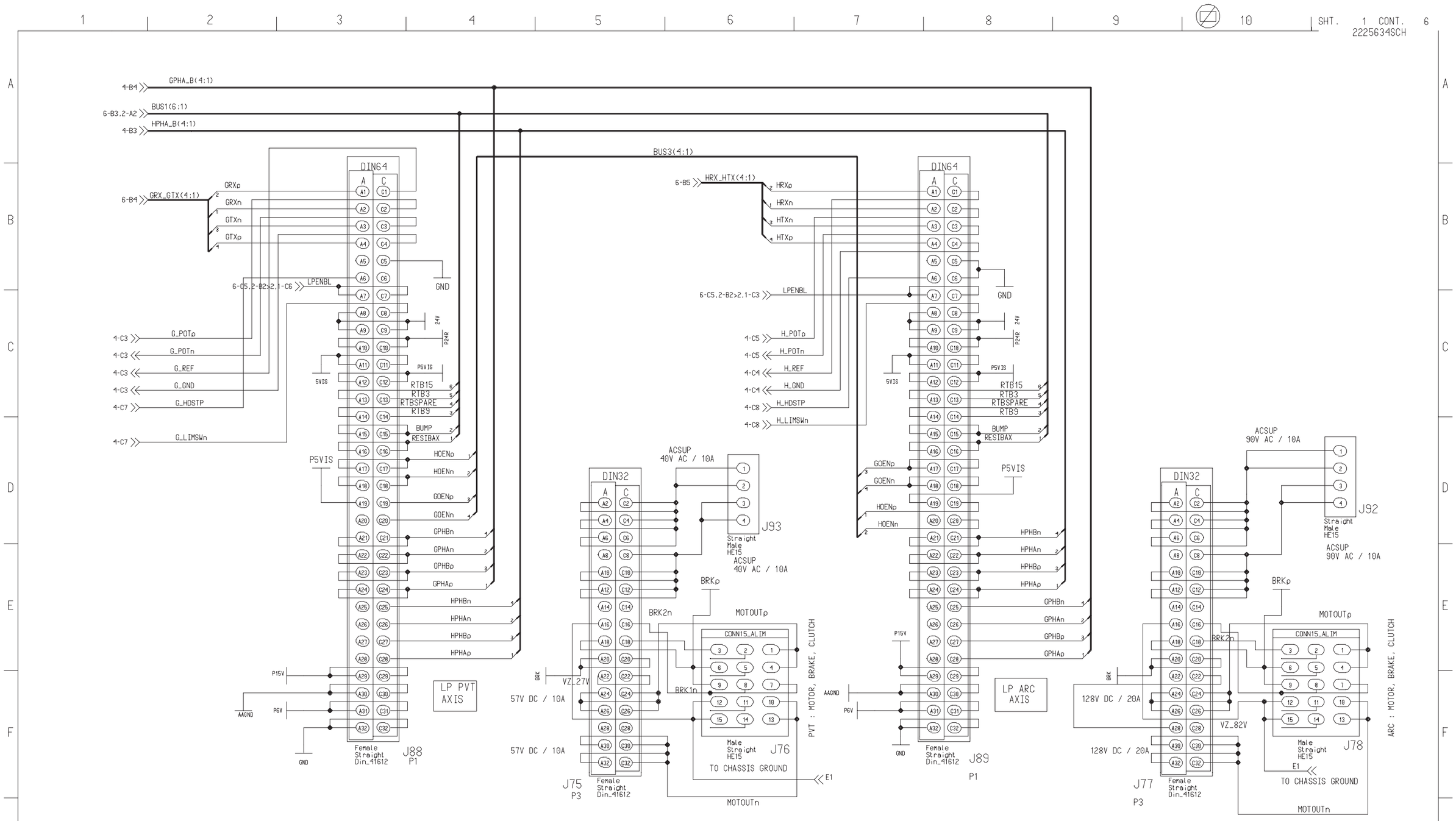

BLOCK PATHNAME	$PROJECT_EVEREST/bckv3lat_ASM/bckv3lat					BLOCK SHT 1 OF 6			
REV 1 PCN XXXXXXXX	DESCRIPTION XXXXXXXXXXXXXXXXXXXXXXXXXXXXXXXXXX		MADE SEAL IND.	DATE 10/09/98	GE Medical Systems BUC - FRANCE	DESIGN TITLE BACKPLANE LAT BOARD			
MADE BY NAME	DATE DD/MM/YY	APPR BY NAME	CHECK BAYLE	DATE 10/09/98		FIRST MADE FOR EVEREST			
REV 2 PCN XXXXXXXX	DESCRIPTION XXXXXXXXXXXXXXXXXXXXXXXXXXXXXXXXXX		APPR ALBESA	DATE 10/09/98		DRAWING NO. 2225634SCH	REV A	SIZE 3	SHT/CONT. ON 1 / 6
MADE BY NAME	DATE DD/MM/YY	APPR BY NAME	OTHER NAME	DATE DD/MM/YY					

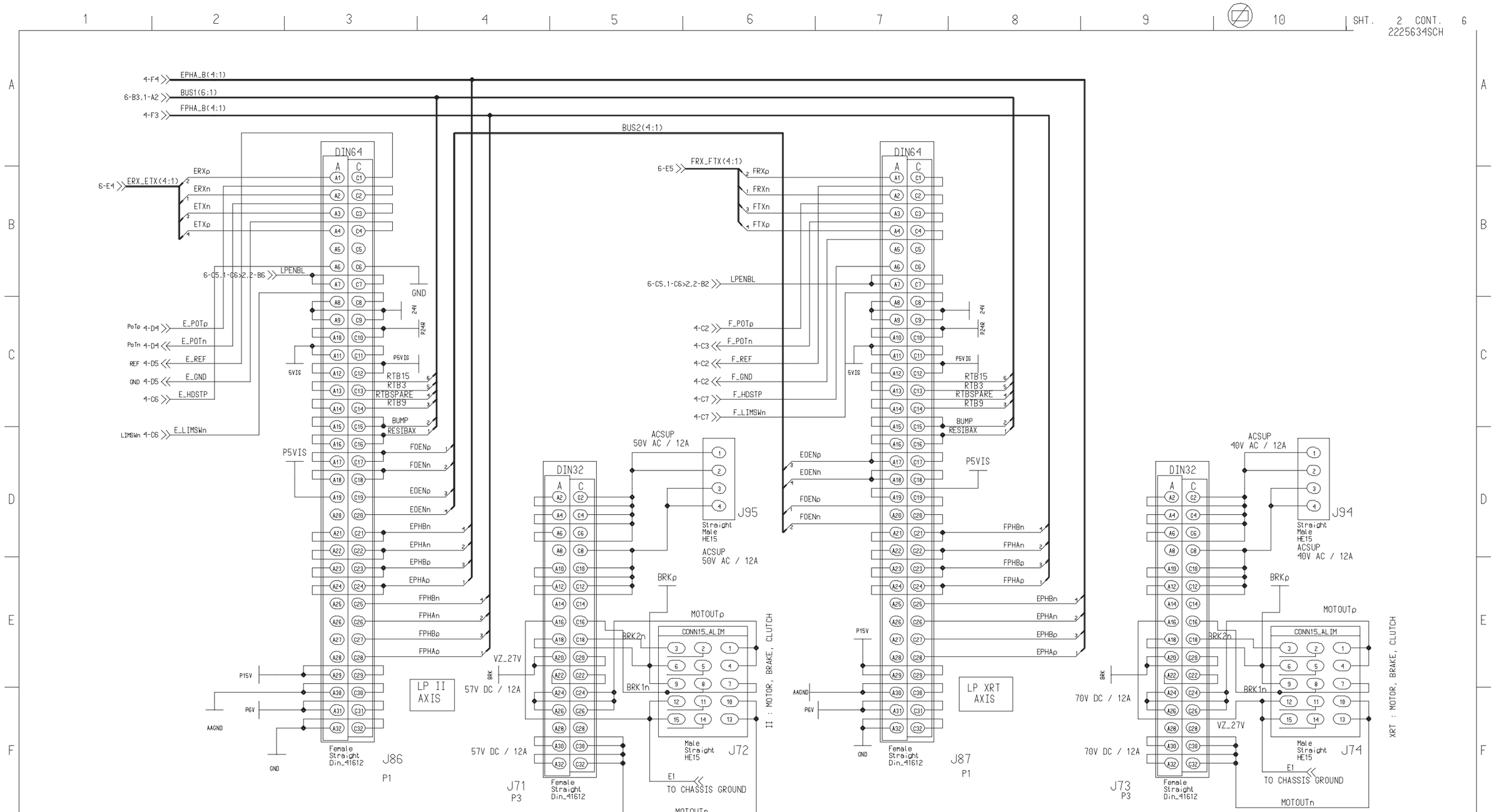

BLOCK PATHNAME $PROJECT_EVEREST/bckv3lat_ASM/bckv3lat				BLOCK SHT 2 OF 6	
REV 1 PCN XXXXXXXX DESCRIPTION XXXXXXXXXXXXXXXXXXXXXXXXXXXXXXXXXX MADE BY NAME DATE DD/MM/YY APPR BY NAME DATE DD/MM/YY	MADE SEAL IND. DATE 10/09/98 CHECK BAYLE DATE 10/09/98 APPR ALBESA DATE 10/09/98 OTHER NAME DATE DD/MM/YY	GE Medical Systems BUC - FRANCE	DESIGN TITLE BACKPLANE LAT BOARD FIRST MADE FOR EVEREST		
REV 2 PCN XXXXXXXX DESCRIPTION XXXXXXXXXXXXXXXXXXXXXXXXXXXXXXXXXX MADE BY NAME DATE DD/MM/YY APPR BY NAME DATE DD/MM/YY			DRAWING NO. 2225634SCH	REV A	SIZE 3 / SHT/CONT. ON 2 / 6

LATERAL POSITIONER RACK

SHT. 3 CONT. 6
2225634SCH

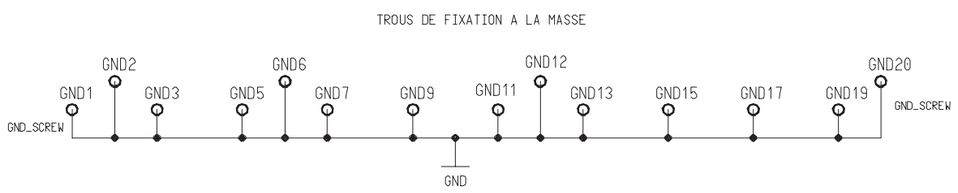

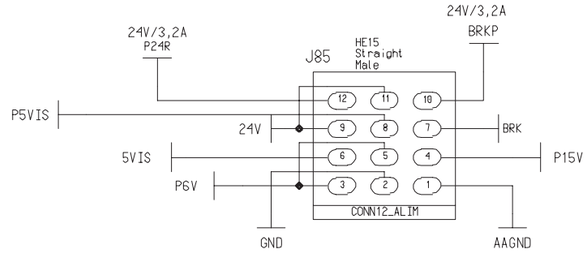

FP RACK,POWER TRANSFORMER

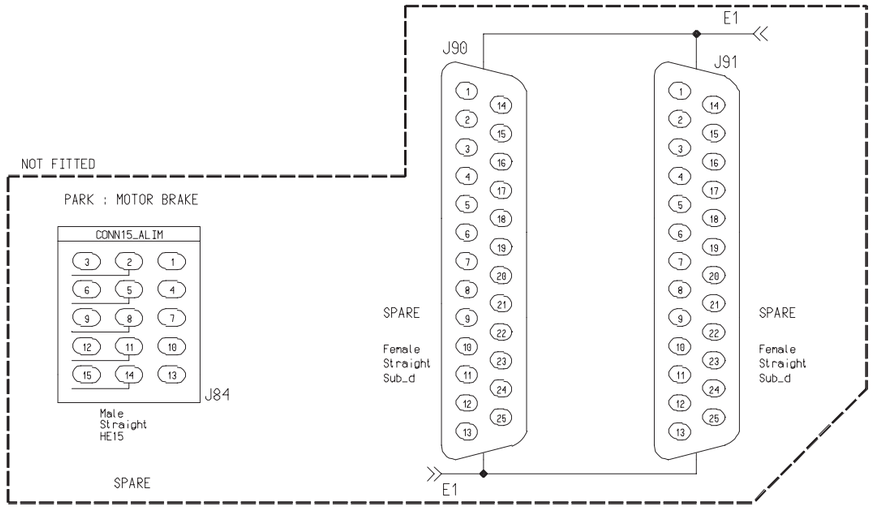

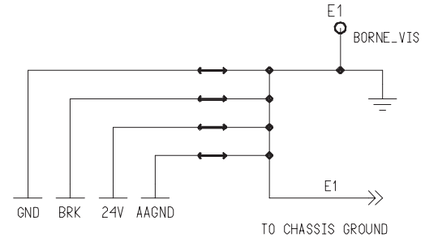

TO CHASSIS GROUND

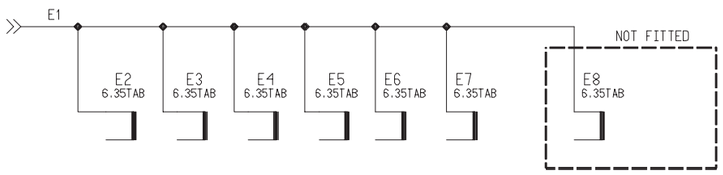

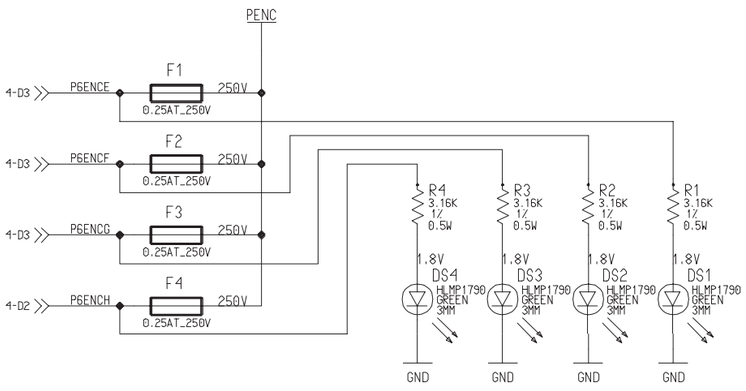

BLOCK PATHNAME $PROJECT_EVEREST/bckv3lat_ASM/bckv3lat				BLOCK SHT 3 OF 6	
REV 1 PCN XXXXXXXX DESCRIPTION XXXXXXXXXXXXXXXXXXXXXXXXXXXXXXXXXX MADE BY NAME DATE DD/MM/YY APPR BY NAME DATE DD/MM/YY	MADE SEAL IND. DATE 10/09/98 CHECK BAYLE DATE 10/09/98 APPR ALBESA DATE 10/09/98 OTHER NAME DATE DD/MM/YY	GE Medical Systems BUC - FRANCE	DESIGN TITLE BACKPLANE LAT BOARD FIRST MADE FOR EVEREST		
REV 2 PCN XXXXXXXX DESCRIPTION XXXXXXXXXXXXXXXXXXXXXXXXXXXXXXXXXX MADE BY NAME DATE DD/MM/YY APPR BY NAME DATE DD/MM/YY			DRAWING NO. 2225634SCH	REV A	SIZE 3 / SHT/CONT. ON 3 / 6

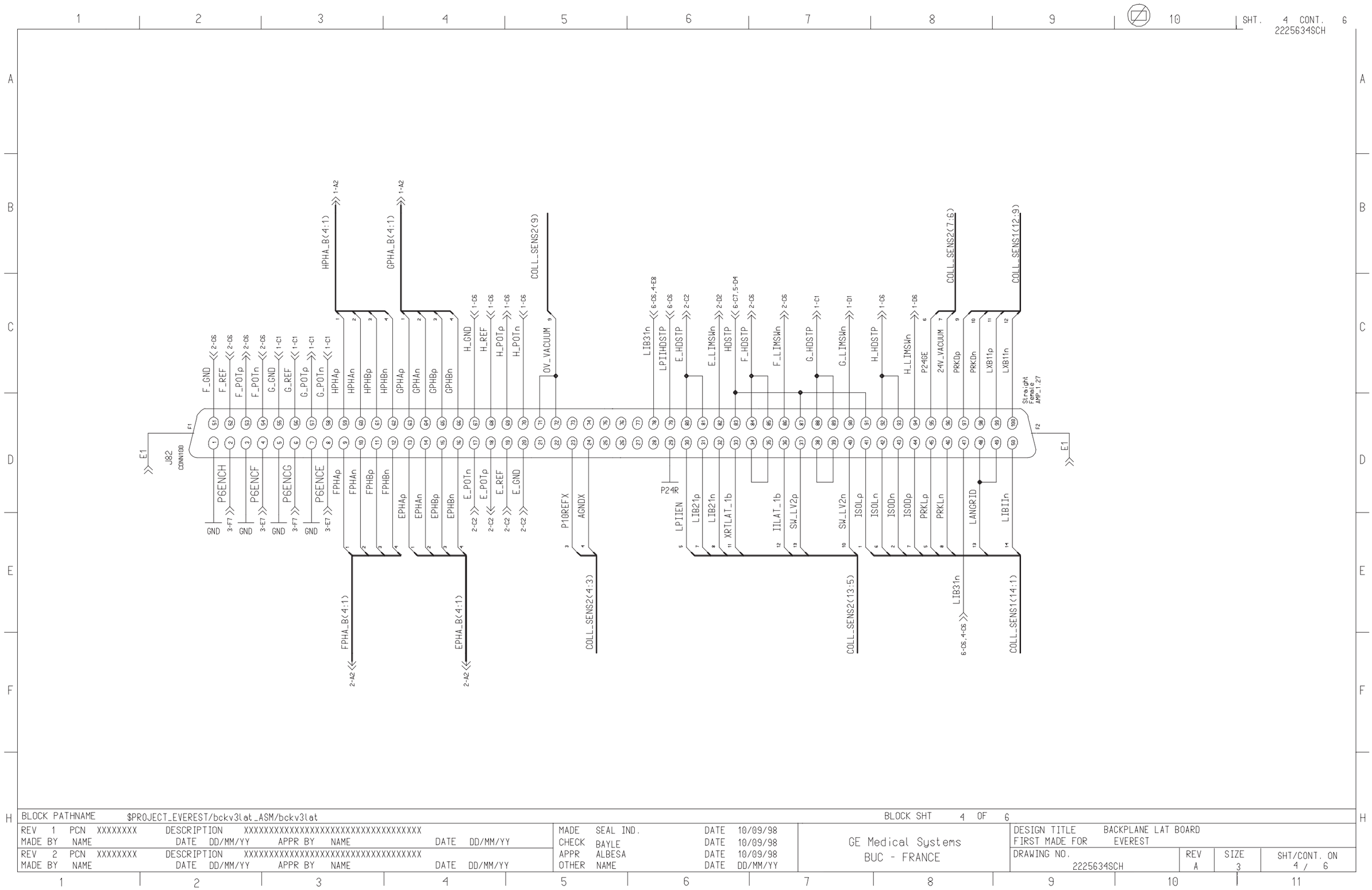

BLOCK PATHNAME $PROJECT_EVEREST/bckv3lat_ASM/bckv3lat								BLOCK SHT 4 OF 6			
REV 1 PCN XXXXXXXX DESCRIPTION XXXXXXXXXXXXXXXXXXXXXXXXXXXXXXXXXX MADE BY NAME DATE DD/MM/YY APPR BY NAME DATE DD/MM/YY				MADE SEAL IND.	DATE 10/09/98	GE Medical Systems BUC - FRANCE		DESIGN TITLE BACKPLANE LAT BOARD FIRST MADE FOR EVEREST			
REV 2 PCN XXXXXXXX DESCRIPTION XXXXXXXXXXXXXXXXXXXXXXXXXXXXXXXXXX MADE BY NAME DATE DD/MM/YY APPR BY NAME DATE DD/MM/YY				CHECK BAYLE	DATE 10/09/98			DRAWING NO. 2225634SCH	REV A	SIZE 3	SHT/CONT. ON 4 / 6
				APPR ALBESA	DATE 10/09/98						
				OTHER NAME	DATE DD/MM/YY						

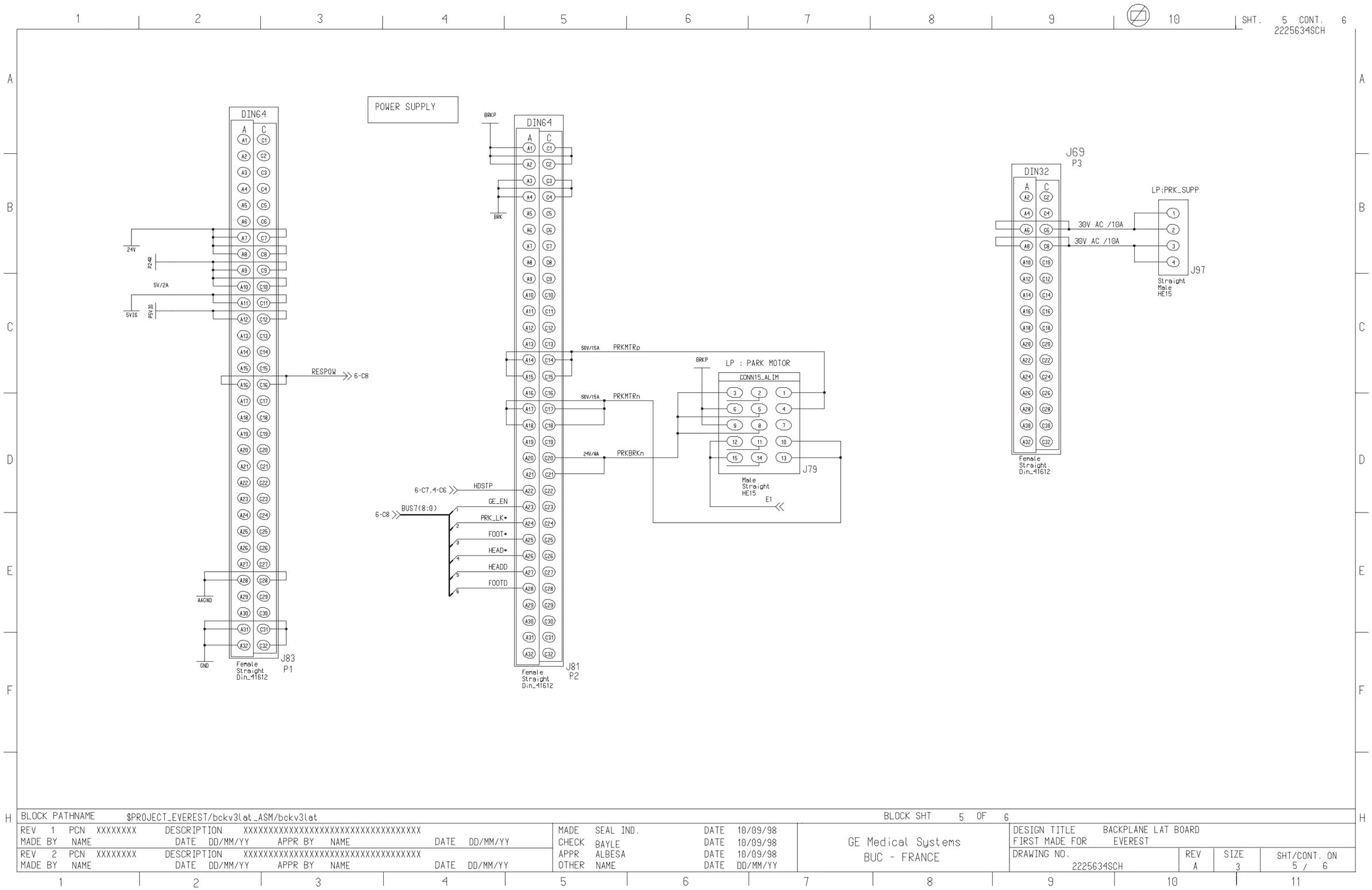

BLOCK PATHNAME $PROJECT_EVEREST/bckv3lat_ASM/bckv3lat								BLOCK SHT 5 OF 6			
REV 1 PCN XXXXXXXX DESCRIPTION XXXXXXXXXXXXXXXXXXXXXXXXXXXXXXXXXX MADE BY NAME DATE DD/MM/YY APPR BY NAME DATE DD/MM/YY				MADE SEAL IND.	DATE 10/09/98	GE Medical Systems BUC - FRANCE		DESIGN TITLE BACKPLANE LAT BOARD FIRST MADE FOR EVEREST			
REV 2 PCN XXXXXXXX DESCRIPTION XXXXXXXXXXXXXXXXXXXXXXXXXXXXXXXXXX MADE BY NAME DATE DD/MM/YY APPR BY NAME DATE DD/MM/YY				CHECK BAYLE	DATE 10/09/98			DRAWING NO. 2225634SCH	REV A	SIZE 3	SHT/CONT. ON 5 / 6
				APPR ALBESA	DATE 10/09/98						
				OTHER NAME	DATE DD/MM/YY						

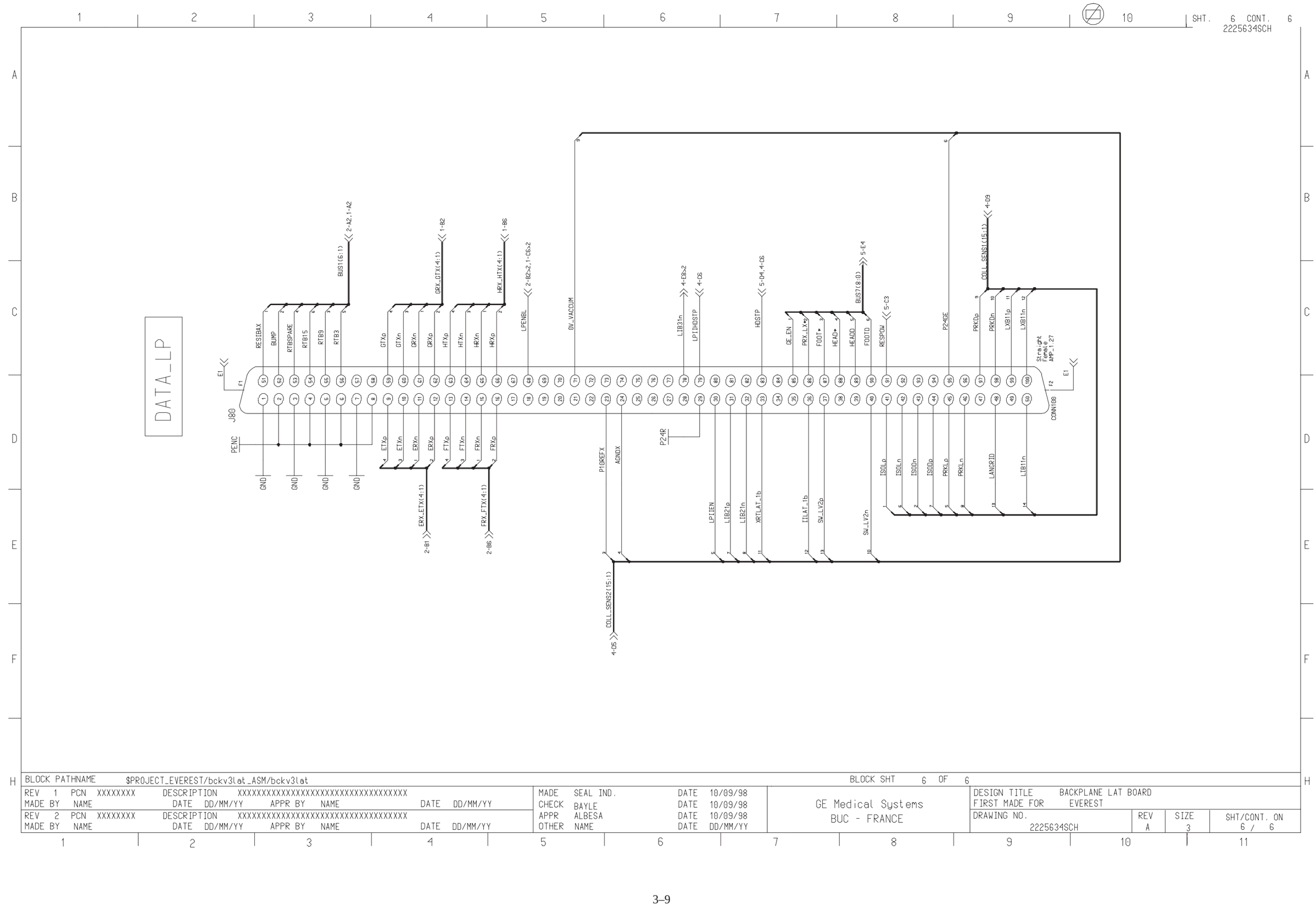
SHT. 6 CONT. 6
2225634SCH
DATA_LP
J80
CONN100
Straight Female AMP_1.27
RESIBAX
BUMP
RTBSPARE
RTB15
RTB9
RTB3
BUS1(6:1)
2-A2,1-A2
GTXp
GTXn
GRXn
GRXp
GRX_GTX(4:1)
1-B2
HTXp
HTXn
HRXn
HRXp
HRX_HTX(4:1)
1-B6
LPENBL
2-B2>2,1-C6>2
0V_VACCUM
LIB31n
4-E8>2
LPIIHOSTP
4-C6
HOSTP
5-D4,4-C6
GE_EN
PRX_LLX*p
FOOT*
HEAD*
HEADD
FOOTD
BUS7(8:0)
5-E4
RESPOW
5-C3
P24GE
PRKDp
PRKDn
LXB11p
LXB11n
COLL_SENS1(15:1)
4-D9
PENC
GND
ETXp
ETXn
ERXn
ERXp
ERX_ETX(4:1)
2-B1
FTXp
FTXn
FRXn
FRXp
FRX_FTX(4:1)
2-B6
P24R
P10REFX
AGNDX
LPIIEN
LIB21p
LIB21n
XRTLAT_1b
ILAT_1b
SW_LV2p
SW_LV2n
ISOLp
ISOLn
ISODn
ISODp
PRKLp
PRKLn
LANGRID
LIB11n
COLL_SENS2(15:1)
4-D5

| | | |

Blank page.

LATERAL POSITIONER RACK

A) REMOVE TAPE FROM RELAYS K4,K5 AFTER BOARD IS CLEANED.
B) MOUNT ALL TEST POINTS THUS : ⓘ
C) ALL SCREW TYPE MOUNTING HARDWARE TO BE INSERTED WITH THE SCREW HEAD ON THE CIRCUIT SIDE OF THE BOARD.
D) MOUNT CAPACITORS FIRMLY ON TO THE BOARD USING A THIN FILM OF HOT MELT ADHESIVE (JET MELT 3748 TC 3M)
E) MOUNT BARS 19 AND 22 BEFORE MOUNTING ANY HEAVY COMPONENTS.
F) USE HEAT TRANSFERT COMPOUND (SILICONE GREASE) FOR MOUNTING ALL COMPONENTS ON HEAT SINK.
G) TRANSISTORS OR DIODES BASE MUST BE TOTALLY IN CONTACT WITH HEAT SINK.

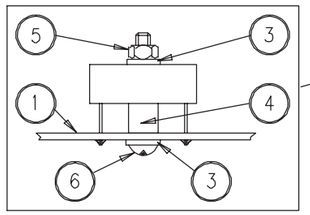

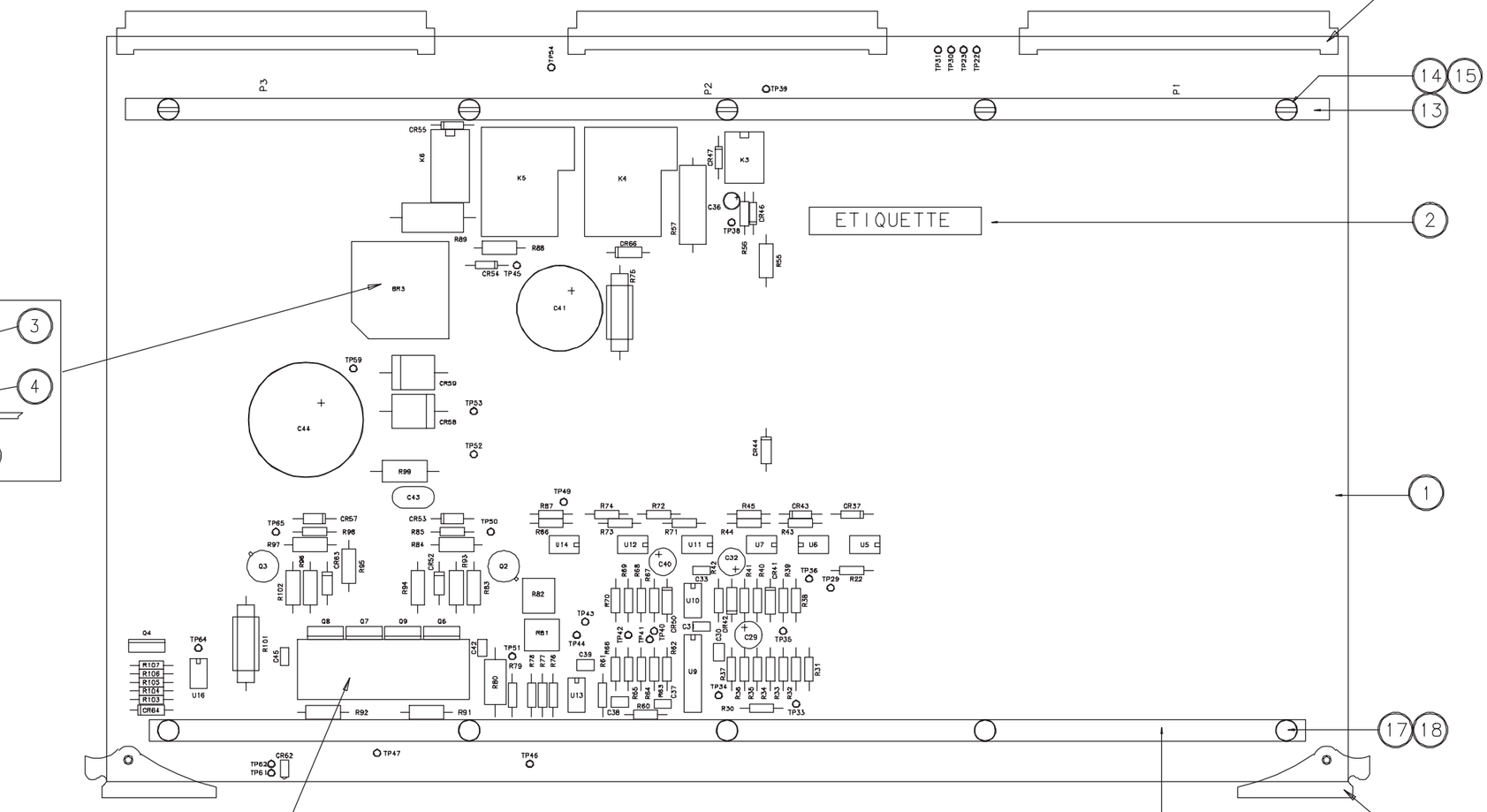

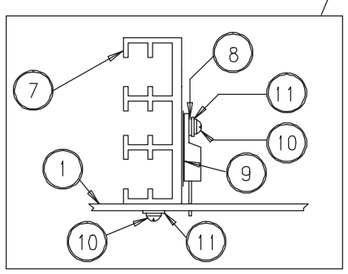

H) CHECK TRIMMING UP FOR ALL HEAT SINK HOLES-MARK 7.

ETIQUETTE

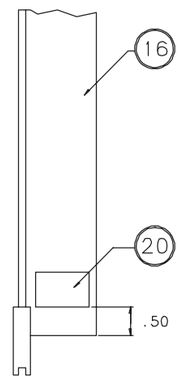

VIEW A-A
SCALE : NONE

Ce document est la propriete de la Societe GE Medical Systems.
Il ne peut etre ni reproduit, ni communique a des tiers sans
l'autorisation ecrite d'une personne mandatee specialement a
cet effet par la dite Societe.

DESSINE PAR	DATE	ECH.	TITRE
SEAL IND.	27-05-98	1	SUPPLY AND PARK COMMAND BOARD
VERIFIE PAR BAYLE	DATE 27-05-98		
APPROUVE PAR ALBESA	DATE 27-05-98		

DEMANDE	REV	EVOLUTION	DESSINE	DATE	APPROUVE	DATE

GE Medical Systems
BUC - FRANCE

NUMERO DE DOCUMENT	FORMAT	FEUILLE
2211388ADW	2	NO NBRE 01 / 01
	A	REV

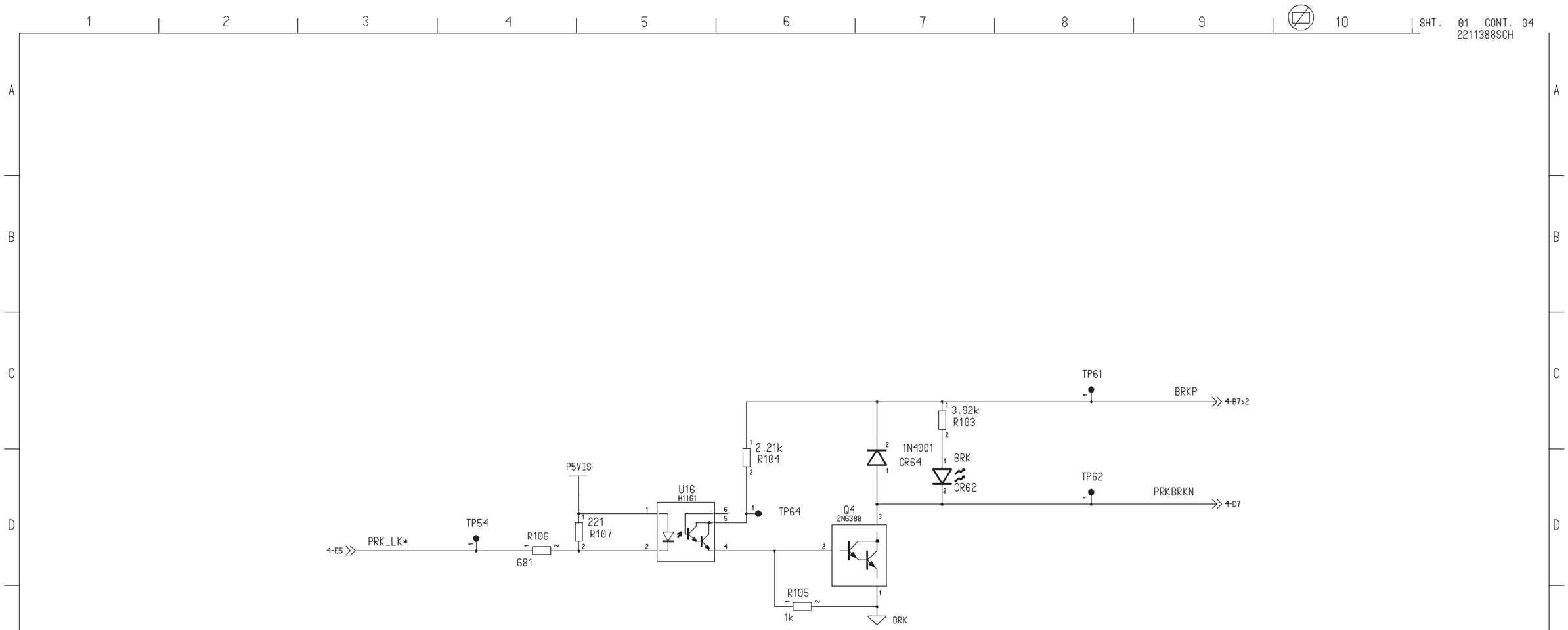

NOTE:
TEST POINTS ARE NOT FITTED

BLOCK PATHNAME $PROJECT_EVEREST/alimbiplanv1_ASM/alimbiplanv1				BLOCK SHT 01 OF 04	
REV 1 PCN XXXXXXXX DESCRIPTION XXXXXXXXXXXXXXXXXXXXXXXXXXXXXXXXXX MADE BY NAME DATE DD/MM/YY APPR BY NAME DATE DD/MM/YY	MADE SEAL IND. DATE 03-04-98 CHECK BAYLE DATE 03-04-98 APPR ALBESA DATE 03-04-98 OTHER NAME DATE DD/MM/YY	GE Medical Systems BUC - FRANCE	DESIGN TITLE SUPPLY AND PARK COMMAND BOARD FIRST MADE FOR EVEREST		
REV 2 PCN XXXXXXXX DESCRIPTION XXXXXXXXXXXXXXXXXXXXXXXXXXXXXXXXXX MADE BY NAME DATE DD/MM/YY APPR BY NAME DATE DD/MM/YY			DRAWING NO. 2211388SCH	REV A	SIZE 3 / SHT/CONT. ON 01 / 04

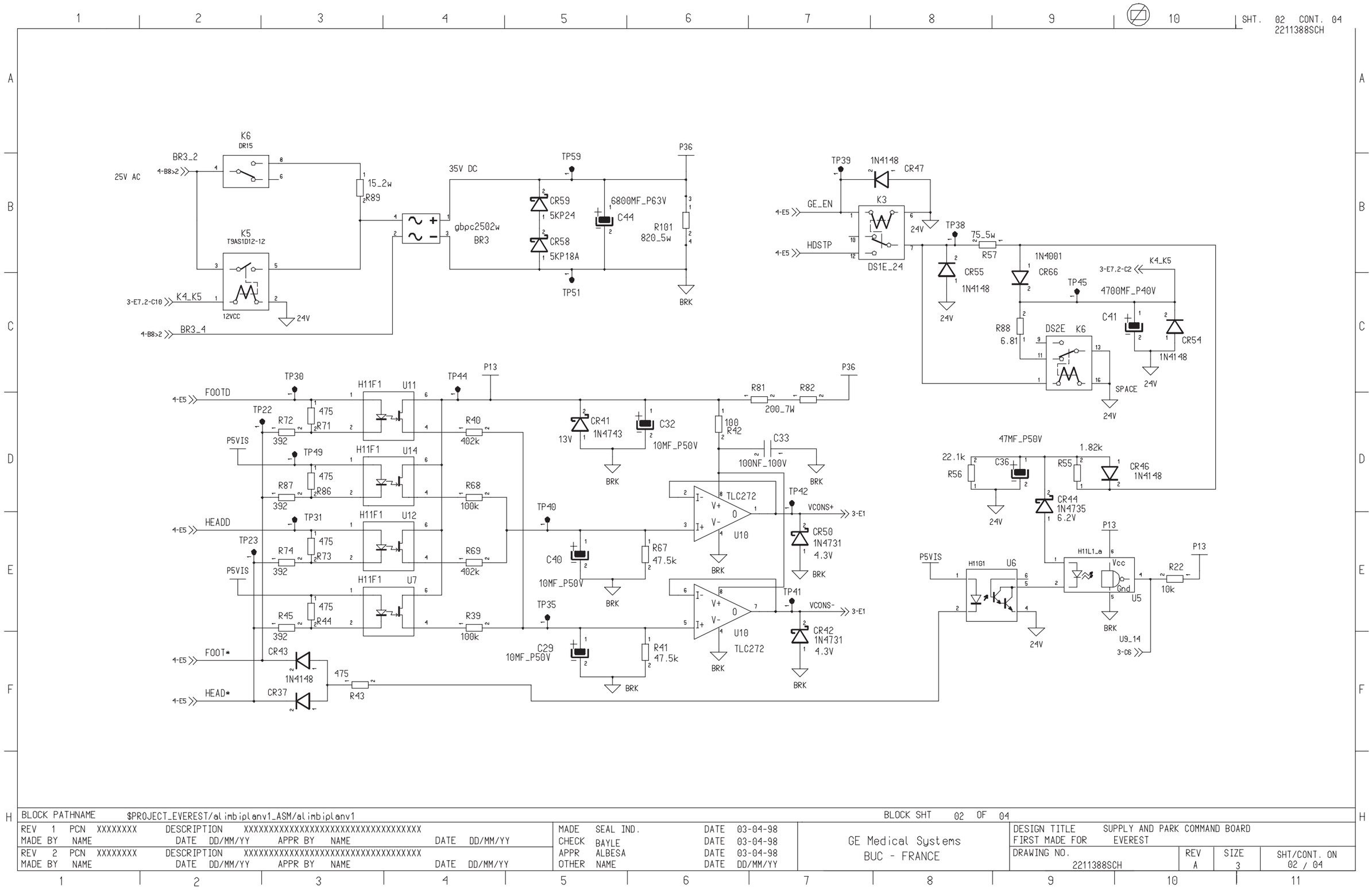

BLOCK PATHNAME $PROJECT_EVEREST/alimbiplanv1_ASM/alimbiplanv1								BLOCK SHT 02 OF 04			
REV 1 PCN XXXXXXXX DESCRIPTION XXXXXXXXXXXXXXXXXXXXXXXXXXXXXXXXXX MADE BY NAME DATE DD/MM/YY APPR BY NAME DATE DD/MM/YY				MADE SEAL IND. DATE 03-04-98 CHECK BAYLE DATE 03-04-98 APPR ALBESA DATE 03-04-98 OTHER NAME DATE DD/MM/YY		GE Medical Systems BUC - FRANCE		DESIGN TITLE SUPPLY AND PARK COMMAND BOARD FIRST MADE FOR EVEREST			
REV 2 PCN XXXXXXXX DESCRIPTION XXXXXXXXXXXXXXXXXXXXXXXXXXXXXXXXXX MADE BY NAME DATE DD/MM/YY APPR BY NAME DATE DD/MM/YY								DRAWING NO. 2211388SCH	REV A	SIZE 3	SHT/CONT. ON 02 / 04

LATERAL POSITIONER RACK

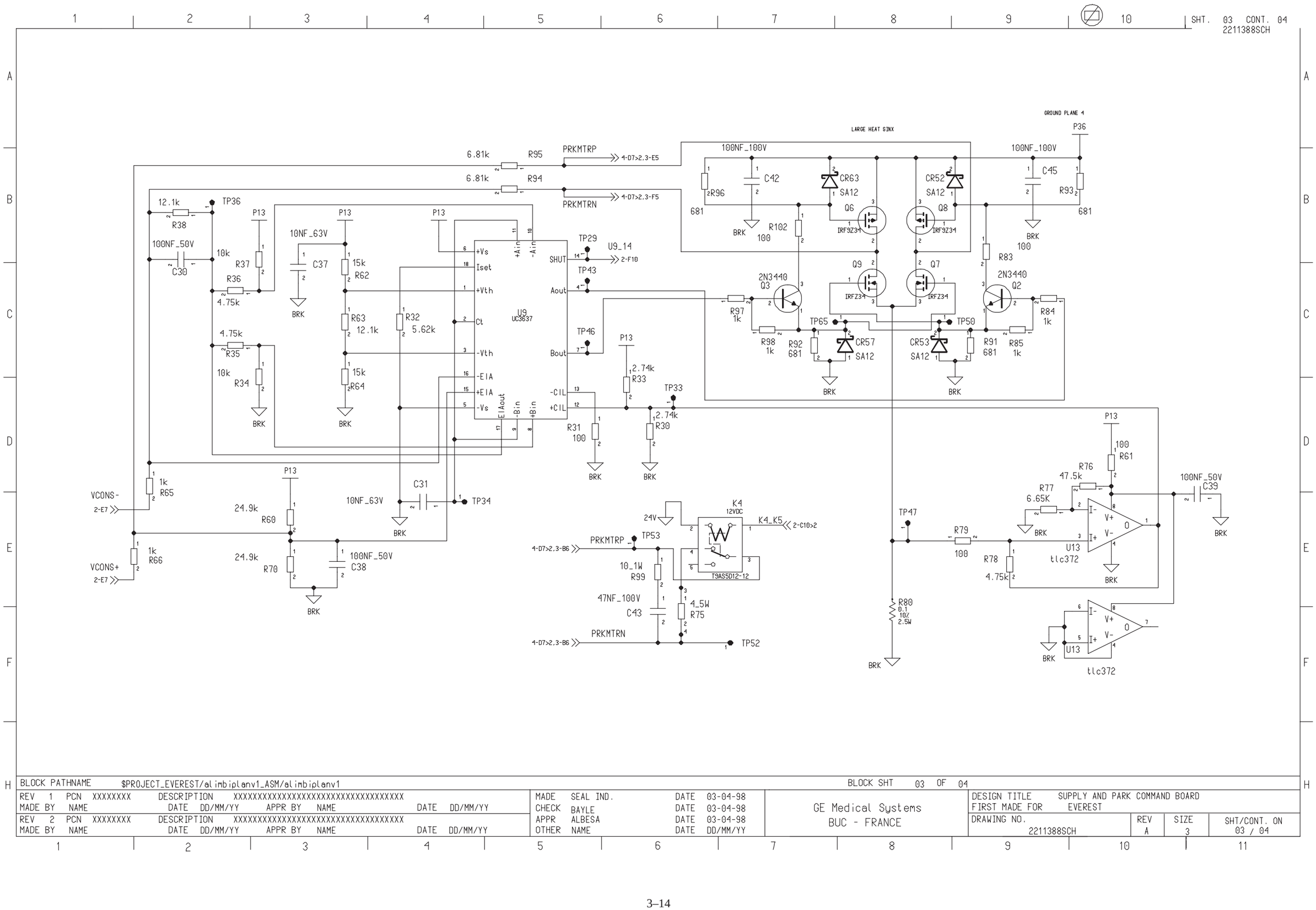
SHT. 03 CONT. 04
2211388SCH
GROUND PLANE 4
LARGE HEAT SINX
PRKMTRP
PRKMTRN
4-D7>2.3-E5
4-D7>2.3-F5
6.81k
R95
R94
100NF_100V
C42
CR63
SA12
CR52
SA12
C45
R93
681
R96
R102
100
Q6
Q8
IRF9Z34
Q9
Q7
IRFZ34
2N3440
Q3
Q2
R83
R97
1k
R98
1k
R92
681
R91
681
R85
1k
R84
1k
TP65
TP50
CR57
CR53
BRK
12.1k
R38
TP36
100NF_50V
C30
10k
R37
R36
4.75k
R35
R34
P13
10NF_63V
C37
15k
R62
R63
12.1k
R64
R32
5.62k
U9
UC3637
+Vs
Iset
+Vth
Ct
-Vth
-EIA
+EIA
-Vs
ElAout
-Bin
+Bin
+Ain
-Ain
SHUT
Aout
Bout
-CIL
+CIL
TP29
U9_14
2-F10
TP43
TP46
2.74k
R33
TP33
R30
R31
100
VCONS-
2-E7
VCONS+
1k
R65
R66
24.9k
R60
R70
C31
TP34
100NF_50V
C38
24V
K4
12VDC
K4_K5
2-C10>2
T9AS5D12-12
PRKMTRP
TP53
4-D7>2.3-B6
10_1W
R99
47NF_100V
C43
4_5W
R75
PRKMTRN
TP52
TP47
R79
100
R78
4.75k
R80
0.1
10%
2.5W
R76
47.5k
R77
6.65K
R61
100
U13
tlc372
100NF_50V
C39
BLOCK PATHNAME $PROJECT_EVEREST/alimbiplanv1_ASM/alimbiplanv1
BLOCK SHT 03 OF 04
REV 1 PCN XXXXXXXX DESCRIPTION XXXXXXXXXXXXXXXXXXXXXXXXXXXXXXXXXXXX
MADE BY NAME DATE DD/MM/YY APPR BY NAME DATE DD/MM/YY
REV 2 PCN XXXXXXXX DESCRIPTION XXXXXXXXXXXXXXXXXXXXXXXXXXXXXXXXXXXX
MADE BY NAME DATE DD/MM/YY APPR BY NAME DATE DD/MM/YY
MADE SEAL IND. DATE 03-04-98
CHECK BAYLE DATE 03-04-98
APPR ALBESA DATE 03-04-98
OTHER NAME DATE DD/MM/YY
GE Medical Systems
BUC - FRANCE
DESIGN TITLE SUPPLY AND PARK COMMAND BOARD
FIRST MADE FOR EVEREST
DRAWING NO. 2211388SCH
REV A
SIZE 3
SHT/CONT. ON 03 / 04

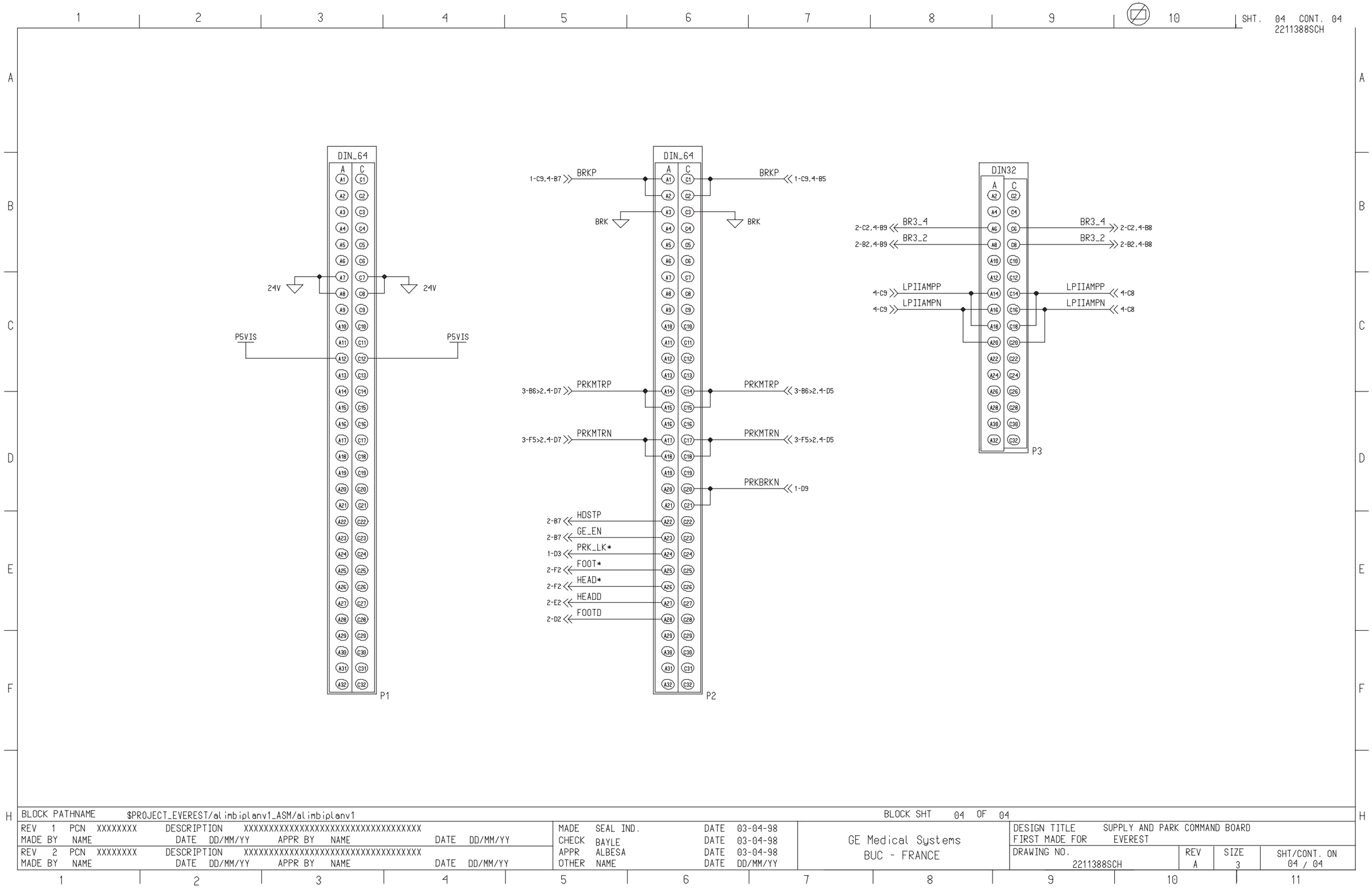
SHT. 04 CONT. 04
2211388SCH
DIN_64
P1
24V
24V
P5VIS
P5VIS
DIN_64
P2
1-C9,4-B7
BRKP
BRKP
1-C9,4-B5
BRK
BRK
3-B6>2,4-D7
PRKMTRP
PRKMTRP
3-B6>2,4-D5
3-F5>2,4-D7
PRKMTRN
PRKMTRN
3-F5>2,4-D5
PRKBRKN
1-D9
2-B7
HDSTP
2-B7
GE_EN
1-D3
PRK_LK*
2-F2
FOOT*
2-F2
HEAD*
2-E2
HEADD
2-D2
FOOTD
DIN32
P3
2-C2,4-B9
BR3_4
BR3_4
2-C2,4-B8
2-B2,4-B9
BR3_2
BR3_2
2-B2,4-B8
4-C9
LPIIAMPP
LPIIAMPP
4-C8
4-C9
LPIIAMPN
LPIIAMPN
4-C8
BLOCK PATHNAME $PROJECT_EVEREST/alimbiplanv1_ASM/alimbiplanv1
BLOCK SHT 04 OF 04
REV 1 PCN XXXXXXXX DESCRIPTION XXXXXXXXXXXXXXXXXXXXXXXXXXXXXXXXXX
MADE BY NAME DATE DD/MM/YY APPR BY NAME DATE DD/MM/YY
REV 2 PCN XXXXXXXX DESCRIPTION XXXXXXXXXXXXXXXXXXXXXXXXXXXXXXXXXX
MADE BY NAME DATE DD/MM/YY APPR BY NAME DATE DD/MM/YY
MADE SEAL IND. DATE 03-04-98
CHECK BAYLE DATE 03-04-98
APPR ALBESA DATE 03-04-98
OTHER NAME DATE DD/MM/YY
GE Medical Systems
BUC - FRANCE
DESIGN TITLE SUPPLY AND PARK COMMAND BOARD
FIRST MADE FOR EVEREST
DRAWING NO. 2211388SCH
REV A
SIZE 3
SHT/CONT. ON 04 / 04

Blank page.

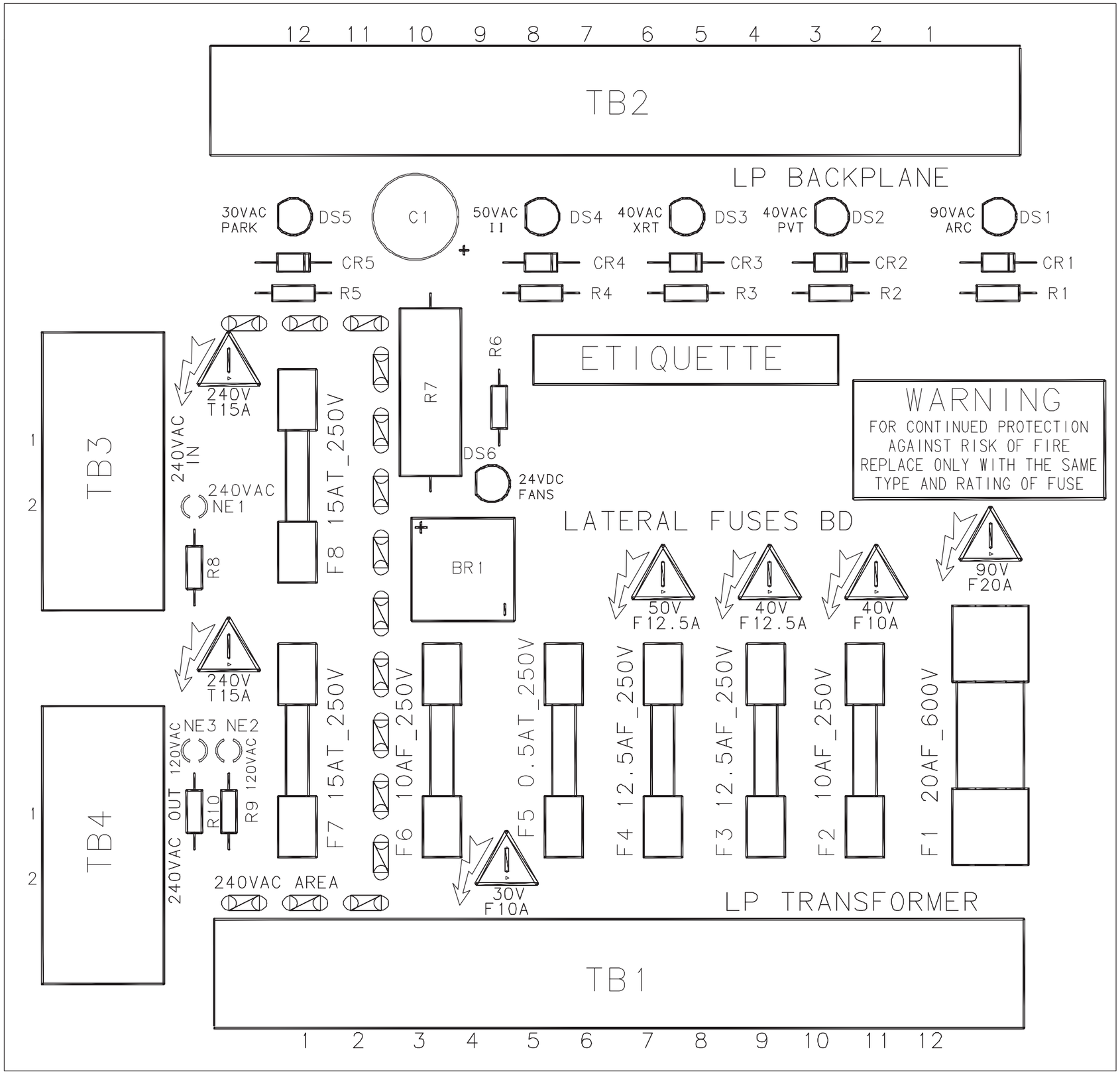
12 11 10 9 8 7 6 5 4 3 2 1
TB2
LP BACKPLANE
30VAC PARK
DS5
C1
50VAC II
DS4
40VAC XRT
DS3
40VAC PVT
DS2
90VAC ARC
DS1
CR5
CR4
CR3
CR2
CR1
R5
R4
R3
R2
R1
ETIQUETTE
WARNING
FOR CONTINUED PROTECTION AGAINST RISK OF FIRE REPLACE ONLY WITH THE SAME TYPE AND RATING OF FUSE
240V T15A
240VAC IN
TB3
240VAC NE1
R8
F8 15AT_250V
R7
R6
DS6
24VDC FANS
BR1
LATERAL FUSES BD
50V F12.5A
40V F12.5A
40V F10A
90V F20A
240V T15A
TB4
NE3 NE2
240VAC OUT 120VAC
R10
R9 120VAC
F7 15AT_250V
F6 10AF_250V
F5 0.5AT_250V
F4 12.5AF_250V
F3 12.5AF_250V
F2 10AF_250V
F1 20AF_600V
240VAC AREA
30V F10A
LP TRANSFORMER
TB1
1 2 3 4 5 6 7 8 9 10 11 12

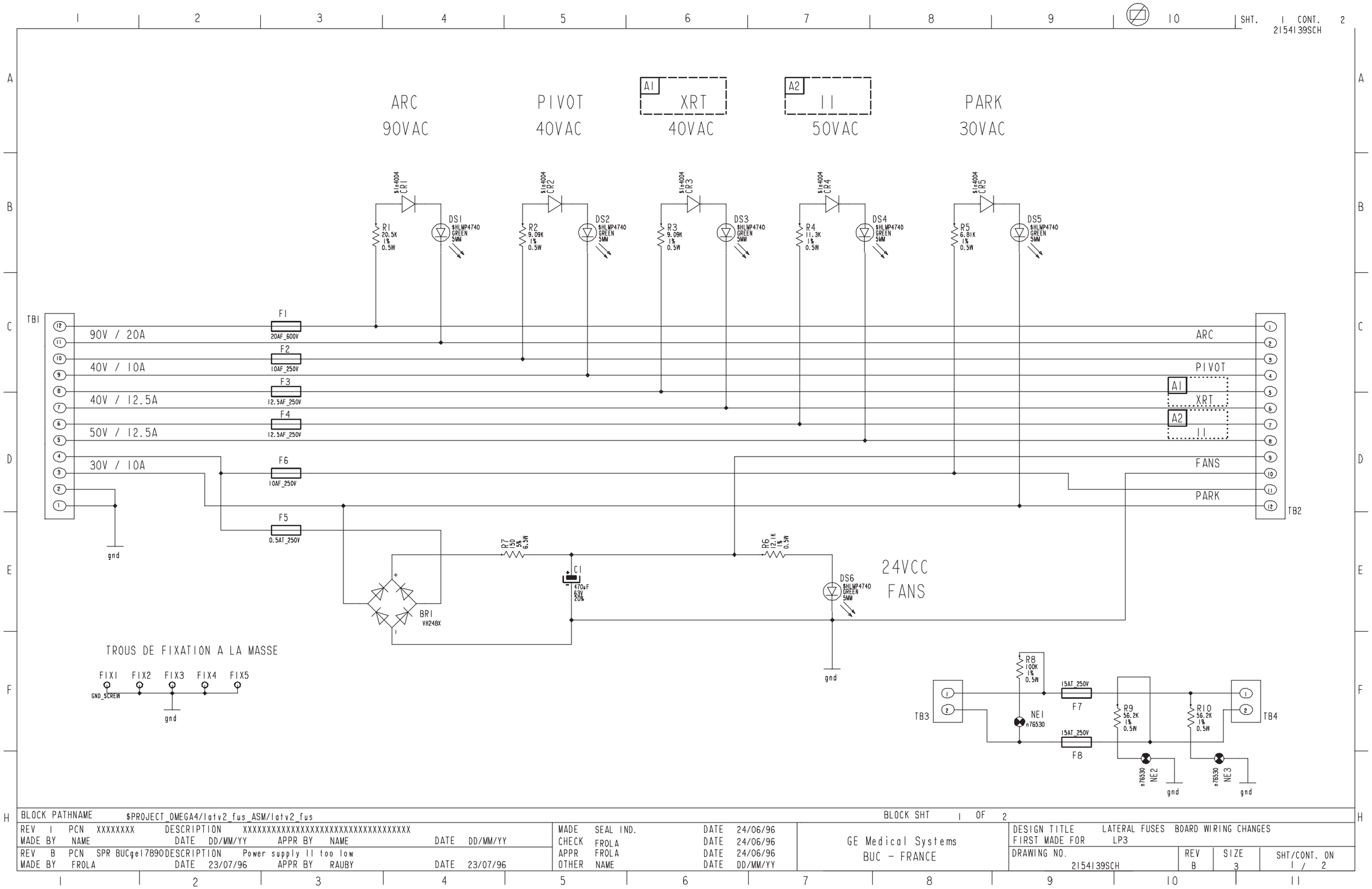

BLOCK PATHNAME $PROJECT_OMEGA4/latv2_fus_ASM/latv2_fus			BLOCK SHT 1 OF 2
REV 1 PCN XXXXXXXX DESCRIPTION XXXXXXXXXXXXXXXXXXXXXXXXXXXXXXXXXX MADE BY NAME DATE DD/MM/YY APPR BY NAME DATE DD/MM/YY	MADE SEAL IND. DATE 24/06/96 CHECK FROLA DATE 24/06/96 APPR FROLA DATE 24/06/96 OTHER NAME DATE DD/MM/YY	GE Medical Systems BUC - FRANCE	DESIGN TITLE LATERAL FUSES BOARD WIRING CHANGES FIRST MADE FOR LP3
REV B PCN SPR BUCgel7890 DESCRIPTION Power supply II too low MADE BY FROLA DATE 23/07/96 APPR BY RAUBY DATE 23/07/96			DRAWING NO. 2154139SCH / REV B / SIZE 3 / SHT/CONT. ON 1 / 2

SHEET MODIFICATIONS

MODIF. REF	SHEET No	CROSS. REF	EXPLANATION	DDM. DMAQ OR SPR
A1	SHI	A6 / D10	TEXT "11" CHANGED TO "XRT"	SPR BUCgel7890
A2	SHI	A7 / D10	TEXT "XRT" CHANGED TO "11"	SPR BUCgel7890

Blank page.

4. AC DISTRIBUTION

TITLE	DRAWING NUMBER	PAGE NUMBER
AC Distribution version 1		
AC Distribution Unit (version 1)	6120–456	4–3
TAP Switching Board (version 1)	6120–459	4–4 TO 4–5
Regulation Board Circuit Diagram 1/3 to 3/3 (version 1)	6120–507	4–6 TO 4–9
AC Distribution version 2		
AC Distribution Unit (version 2)	2234239–02SCH	4–11
TAP Switching Board (version 2)	2221007–02SCH	4–12 TO 4–13
Regulation Board Circuit Diagram (version 2)	2241043–02SCH	4–14 TO 4–15

Blank page.

Rev.	Description	Date	Approval
A	ECO 4632	5/29/98	JIM K.
B	ECO 4719	8/07/98	H. BAIK
D	ECO# 5029	1/20/99	H. BAIK
E	SPR BUCge 39522	3/10/99	B. ALBESA

To Biplane Power Supply

240VAC

DS1

DS2

CB2 15A

FL1

1.2/5W R1

R2 68K/2W

6uF C1

A1 :1625-195-01

J1/P1
J2/P2
J3/P3
J4/P4
J5/P5
J6/P6
J7/P7
J8/P8
J9/P9

6 TAP REG PCB

OUTLET 240V (FRANCE) J4

OUTLET 120V (USA) J5

NEUTRAL BUSS

GROUND BUSS

COLD

Winding #1 for ENCODER
Winding # 2 for +5V Reg.
Winding # 3 for +5V Reg.
Winding # 4 for +15V Reg.
Winding # 5 for -15V Reg.
Winding # 6 for +24V Reg.
Winding # 7 for +9V Reg.
Winding # 8 for 90VAC
Winding # 9 for +24V Unreg.
Winding # 10 for +28V Unreg.
Winding # 11 for +19V Reg.
Winding # 12 for +20V Reg.
Winding # 13 for -20V Reg.
Winding # 14 for 130VAC
Winding # 15 for 120VAC
Winding # 16 for 120VAC

T1

A2 :1625-204-01

P2-7

INPUT CONNECTORS J1 J2 J3 J4 J5 J6 J23 J24

OUTPUT CONNECTORS J8 J9 J10 J11

M/POS CONNECTORS J12 J12A J13 J14

T/PANEL CONNECTORS J15 J15A J25

F.D.P. FRONT CONNECTORS J16 J16A J17 J18 J19 J20 J21 J22

120A COLD
120B COLD

B1

120A COLD
120B WARM
RM_DOOR_INTLK
P24
XRAY_ON_LT_SW
XRAY_ON_LT_SUP

30uF C2

TABLE CB4 10A

DISPLAY CB5 2A

XT CB6 4A

DOSIMETRE CB7 1A

INJECTOR CB8 12A

FL2

Table RTN
Display RTN

WARM

FL3

XT RTN
Dosimetre RTN
Injector RTN

CB3 15A

L1 L2 L3 T1 T2 T3 Coil2

Coil1 K6 CONTACTOR02

TB1

RM_DOOR_INTLK 1
P24 2
XRAY_ON_LT_SW 3
XRAY_ON_LT_SUP 4

Customer Installed Options

•PROPERTY OF ON-LINE POWER• • CONFIDENTIAL INFORMATION•

CONTRACT NO.		ON-LINE POWER, INC	
		Title	EUROPEAN AC DISTRIBUTION UNIT
APPROVAL	DATE		
DRAWN ARUN T.	10/27/97	Size D	Number 6120-456 Rev E
CHECKED ARUN T.	10/27/97		
APPROVED HENRY B.	10/27/97	Date 10/2/97	Drawn by ARUN
		Filename 6120-456.sch	Sheet 1 of 1

AC DISTRIBUTION UNIT (VERSION 1)

TAP-SWITCHER CIRCUIT BOARD (PCB1) FUSE LOCATIONS

REVISIONS			
LTR	DESCRIPTION	DATE	APPROVED
B	ECO 4940	11/17/98	
C	REVISED PER ECO # 5011	1/11/98	
D	REVISED PER ECO #5029	1/21/99	

TEST POINTS

1	TP1
2	TP2
3	TP3
4	TP4
5	TP5
6	TP6
7	TP7
8	TP8
9	TP9
10	TP10
11	TP11
12	TP12

OPTION

NOTE:
1– PCB SHOULD BE SUITABLE FOR AUTOMATIC INSERTION
2– FOR JUMPERS 1 AND JUMPER 2
CONNECT 3 TO 4 FOR AUTO OR CONNECT 1 TO 2 FOR MAN.
3– ALL RESISTORS ARE 1/4 W UNLESS OTHERWISE SPECIFIED
4– LAYOUT SHOULD HAVE THE FOLLOWING MARKING :–
BARE BOARD # 1625–195 REV * *
ASSY # 1625–195– ☐ REV ☐
THE RECTANGLES SHOWN ABOVE IS THE WHITE AREA FOR MARKING WITH PEN.

PROPERTY OF ON–LINE POWER
CONFIDENTIAL INFORMATION

CONTRACT NO.		ON–LINE POWER, INC	
		Title: SCHEMATIC DIAGRAM FOR 1625–195–01	
APPROVAL	DATE	Size: D	Number: 6120–459	Rev: D
DRAWN: Arun	10/27/97		
CHECKED: Jim K.	10/27/97	Date: 10/27/97	Drawn by: Arun
APPROVED: Jim K.	10/27/97	Filename: 6120–459.sch	Sheet 1 of 1

TAP SWITCHING BOARD (VERSION 1)

AC DISTRIBUTION

REV 8

sch 2218878–100

REGULATOR BOARD (PCB2) FUSE, POT AND LED LOCATIONS

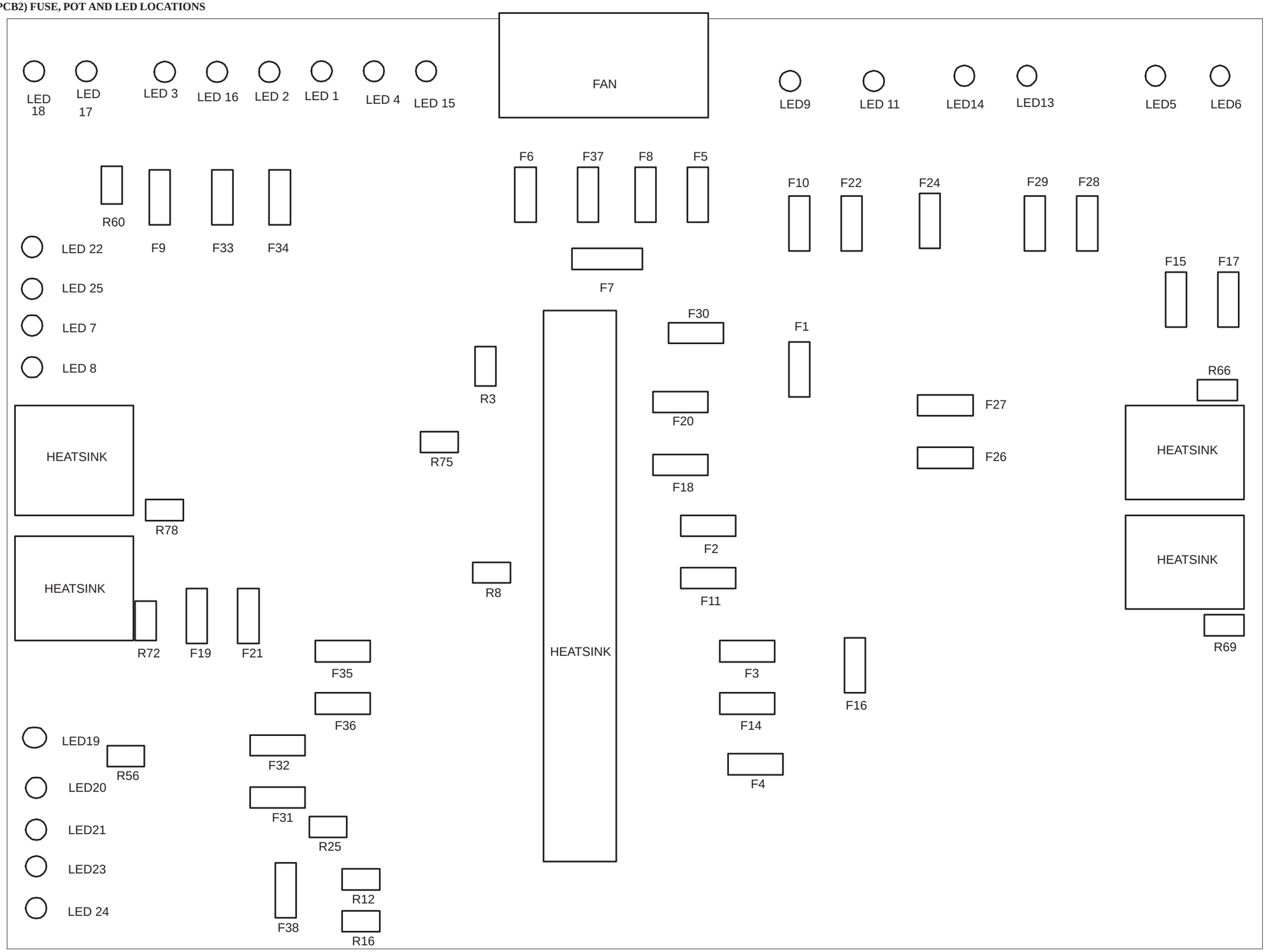

Rev.	Description	Date	Approval
B	ECO 4676	7/20/98	Henry B.
C	ECO 4759	8/11/98	H. BAIK
D	REVISED PER ECO# 5029	1/20/99	
E	REVISED FOR SPR BUCge40109	3/10/99	
F	REVISED FOR SPR BUCge40702	4/15/99	

Note:
1 parts marked *** may need adjustment
2 voltage are approximate

•PROPERTY OF ON-LINE POWER• • CONFIDENTIAL INFORMATION•

CONTRACT NO.		ON-LINE POWER, INC	
		Title: SCHEMATIC DIAGRAM FOR 1625-204-01	
	APPROVAL	DATE	Size: D
DRAWN	Arun T.	10/27/97	Number: 6120-507
CHECKED	Arun T.	10/27/97	Rev: F
APPROVED	Henry B.	10/27/97	Date: 10/2/97 Drawn by: Arun
			Filename: 6120-507.sch Sheet 1 of 3

REGULATION BOARD 1/3 (VERSION 1)

AC DISTRIBUTION

Rev.	Description	Date	Approval

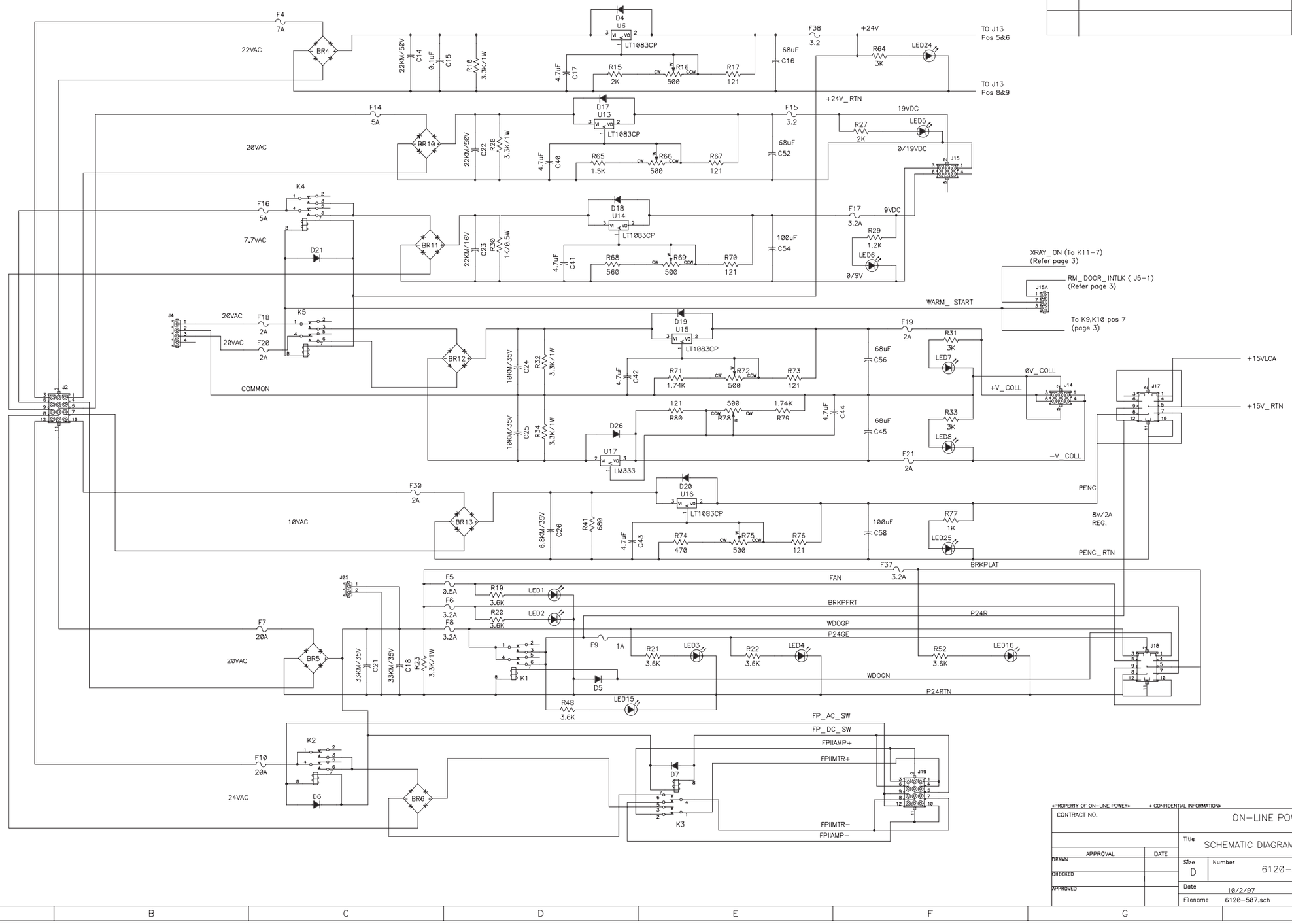

•PROPERTY OF ON–LINE POWER• • CONFIDENTIAL INFORMATION•

CONTRACT NO.	ON–LINE POWER, INC	
APPROVAL / DATE	Title: SCHEMATIC DIAGRAM FOR 1625–204–01	
DRAWN	Size: D	Number: 6120–507 Rev: F
CHECKED	Date: 10/2/97	Drawn by: Arun
APPROVED	Filename: 6120–507.sch	Sheet 2 of 3

REGULATION BOARD 2/3 (VERSION 1)

Rev.	Description	Date	Approval

130VAC
F22 20A
R35 10K
D8
LED9
+PVT
+ARC
J20
130V_RTN

90VAC
F24 20A
R37 6.8K
D10
LED11
+II
+L
J21
90V_RTN

J23
J3
K7
K8
D24
D25
SMA_ARC
SMA_ARC_RTN
SMA_PVT
SMA_PVT_RTN
J22

120A
F26 20A
R39 10K
D12
LED13
120A_COLD
NEUTRAL

120B
F27 20A
R40 10K
D13
LED14
120B_COLD

J24

To J13 Pos 5 +24V
NEUTRAL
K9
K10
K11
D22
D23
120A_WARM
120B_WARM
F28 1A,250V
F29 1A,250V
WARM_START
To J15A–3(page 2)
120A_COLD
120B_COLD
120B_WARM
J6

NEUTRAL
120A_WARM
J8 BCM
J9 SEP
J10 FANS
J11LP
XRAY_ON
To J15A–2(page 2)
RM_DOOR_INTLK
To J15A–1(page 2)
J5
XRAY_ON_LT_SUP
XRAY_ON_LT_SW

•PROPERTY OF ON–LINE POWER• • CONFIDENTIAL INFORMATION•

CONTRACT NO.	ON–LINE POWER, INC		
	Title: SCHEMATIC DIAGRAM FOR 1625–204–01		
APPROVAL / DATE	Size: D	Number: 6120–507	Rev: F
DRAWN	Date: 10/2/97	Drawn by: Arun	
CHECKED	Filename: 6120–507.sch	Sheet 3 of 3	
APPROVED			

REGULATION BOARD 3/3 (VERSION 1)

AC DISTRIBUTION

Blank page.

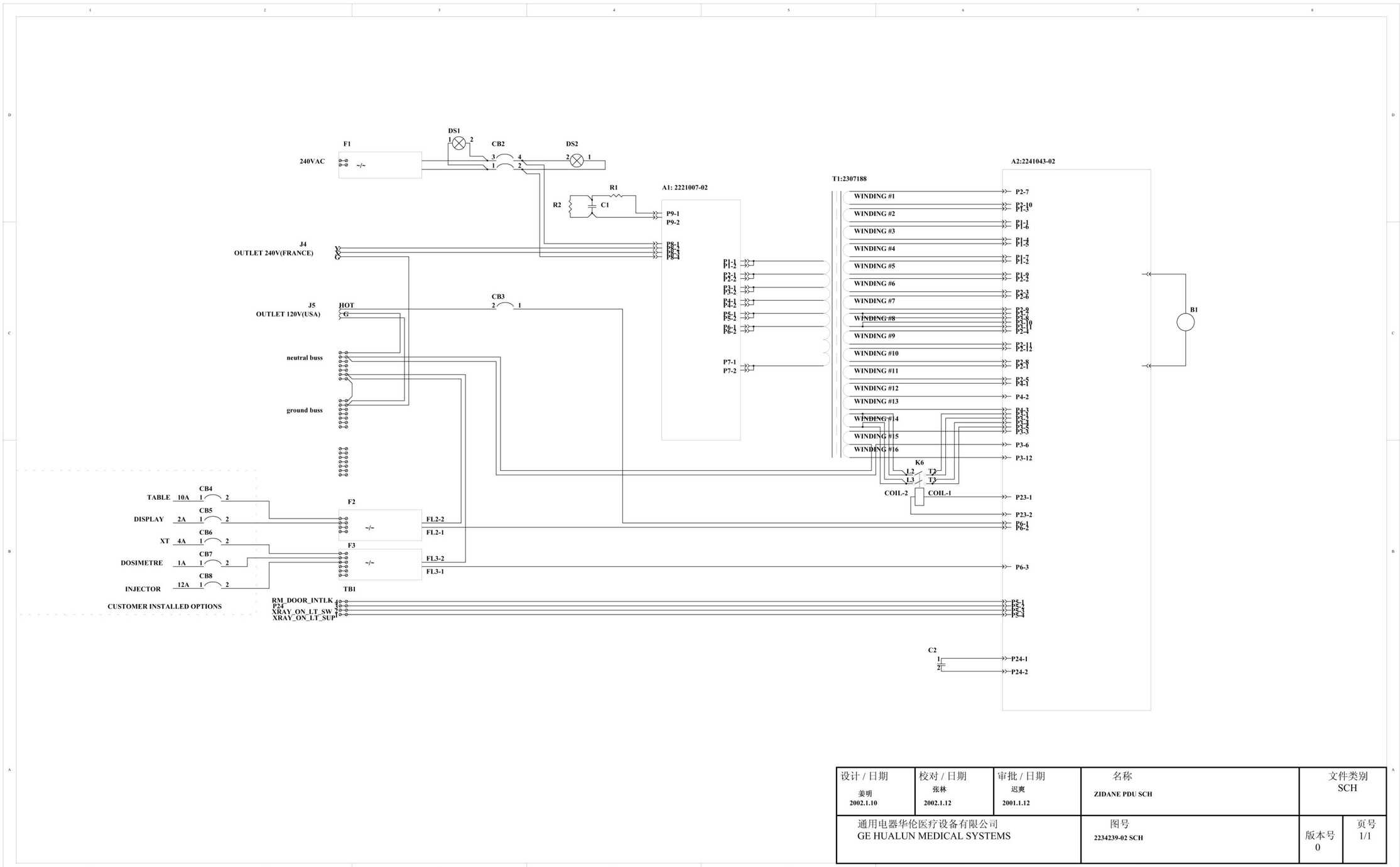

设计 / 日期	校对 / 日期	审批 / 日期	名称	文件类别
姜明 2002.1.10	张林 2002.1.12	迟爽 2001.1.12	ZIDANE PDU SCH	SCH
通用电器华伦医疗设备有限公司 GE HUALUN MEDICAL SYSTEMS			图号 2234239-02 SCH	版本号 0 / 页号 1/1

AC DISTRIBUTION UNIT (VERSION 2)

TAP-SWITCHER CIRCUIT BOARD (PCB1) FUSE LOCATIONS

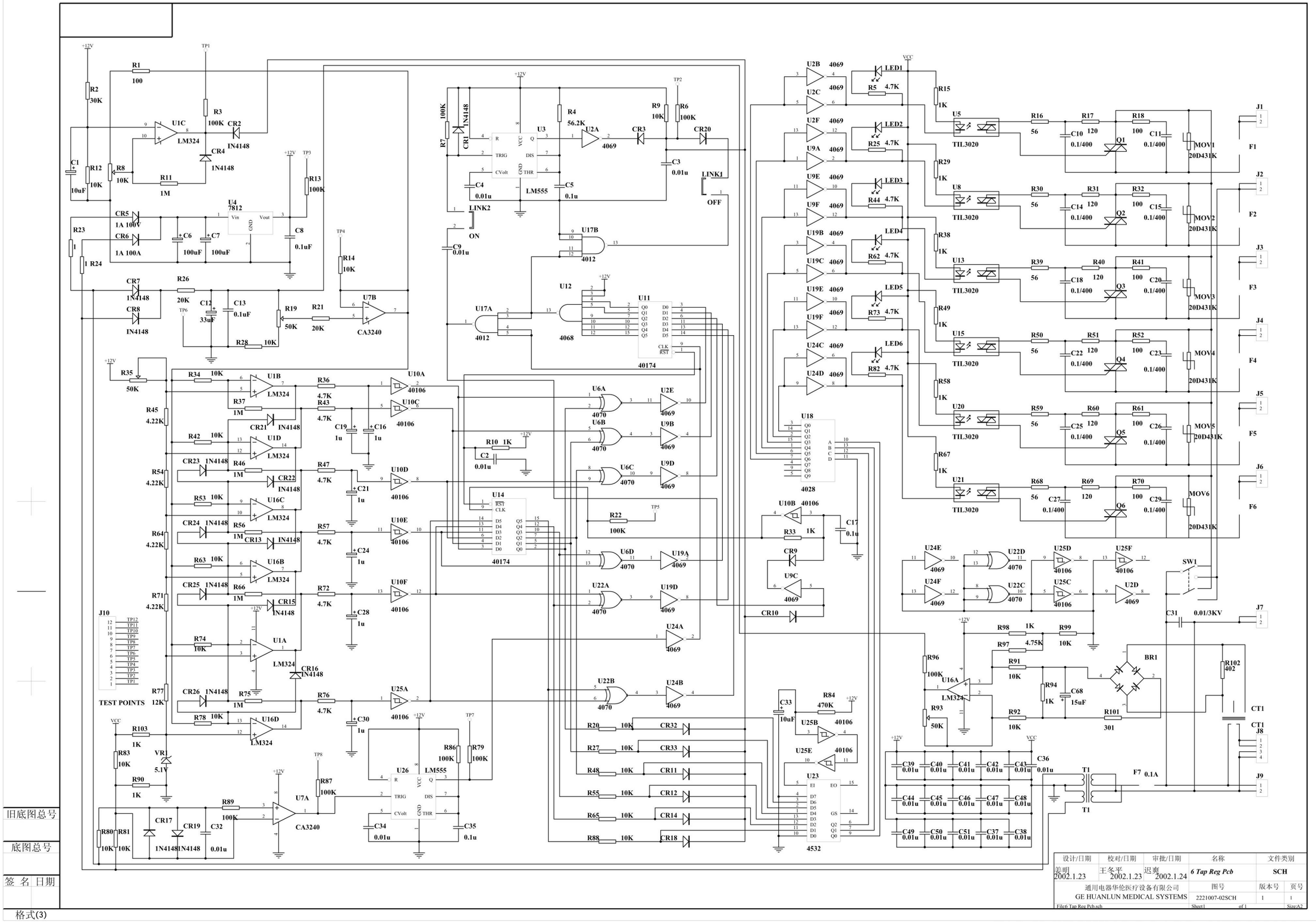

TAP SWITCHING BOARD (VERSION 2)

AC DISTRIBUTION

REV 8

sch 2218878–100

REGULATOR BOARD (PCB2) FUSE, POT AND LED LOCATIONS

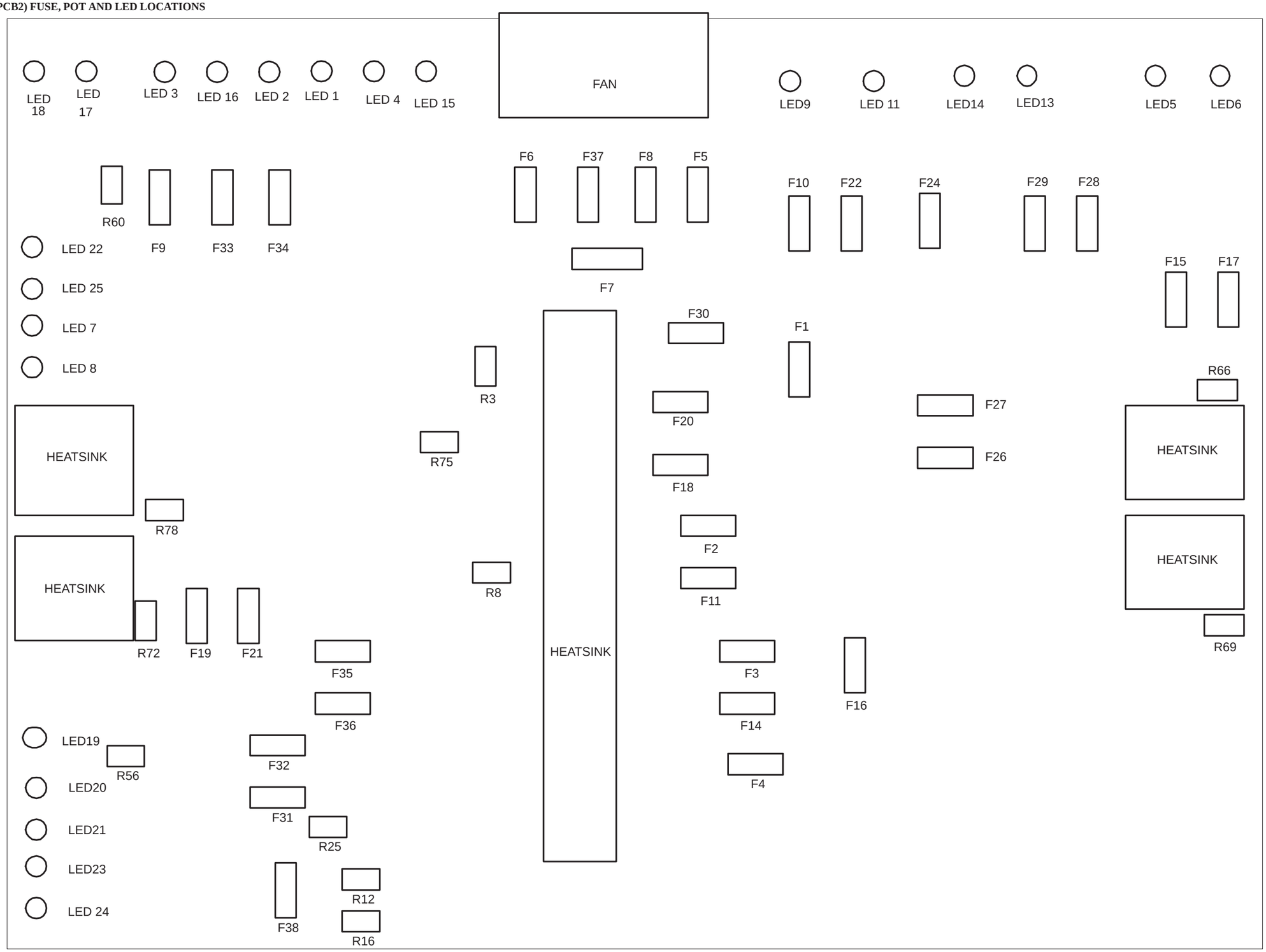

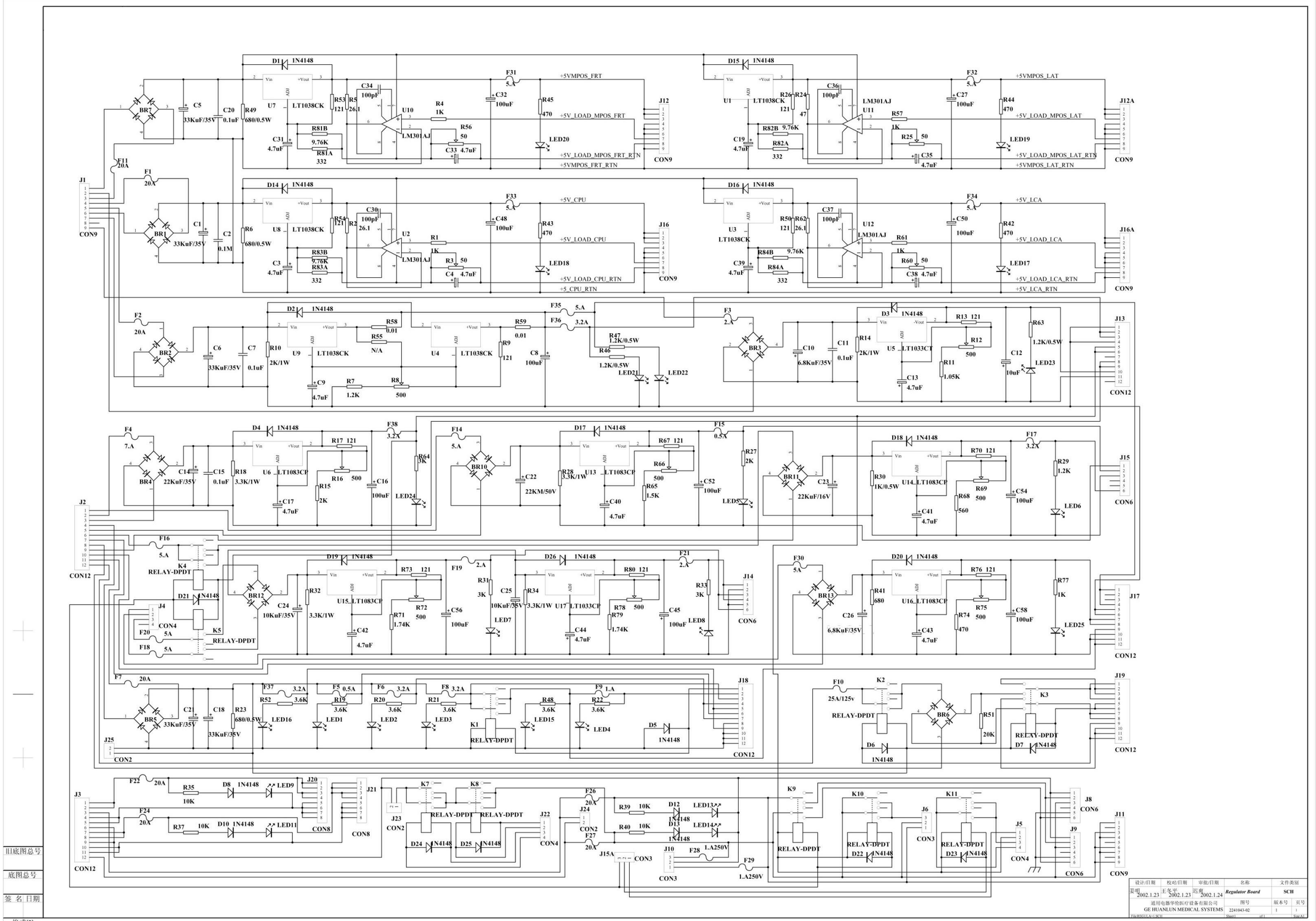

REGULATION BOARD (VERSION 2)

Blank page.