SERVICE MANUAL

The Retractable Bed

Remanufactured By

Hill-Rom®

Click here for errata m038e1b

Product No. P8400/P8500

For Parts Or Technical Assistance
USA 1-800-445-3720 Canada 1-800-267-2337

man038rb

Retractable Bed Service Manual

Revisions

Revision Letter	Pages Affected	Date
Original Issue		February, 1995
A	5-1 and 5-2	October 1995
B	All	June, 1997

man038rb

Third Edition

First Printing 1995

Printed in the USA

The information contained in this manual is subject to change without notice. Hill-Rom makes no commitment to update or keep current, the information contained in this manual.

The only product warranty intended by Hill-Rom is the express, written warranty accompanying the bill of sale to the original purchaser. Hill-Rom makes no other warranty, express or implied, and in particular, makes no warranty of merchantability or fitness for a particular purpose.

Additional copies of this manual can be obtained from Hill-Rom.

Table of Contents

Chapter 1: Introduction

Purpose of this Manual . . . . . 1 - 5
Who Should Use this Manual . . . . . 1 - 5
Organization of this Manual . . . . . 1 - 5
Chapter 1: Introduction . . . . . 1 - 5
Chapter 2: Troubleshooting Procedures . . . . . 1 - 5
Chapter 3: Theory of Operation . . . . . 1 - 5
Chapter 4: Removal, Replacement, and Adjustment Procedures . . . . . 1 - 5
Chapter 5: Parts List . . . . . 1 - 6
Chapter 6: General Procedures . . . . . 1 - 6
Chapter 7: Accessories . . . . . 1 - 6
Typographical Conventions Used in this Manual. . . . . 1 - 7
Introduction to the Retractable Bed . . . . . 1 - 8
Operating Precautions. . . . . 1 - 8
Bed Positions . . . . . 1 - 8
Specifications . . . . . 1 - 12
Physical Description . . . . . 1 - 12
Head Section Inclination. . . . . 1 - 12
CPR Release (Optional on P8400 models) . . . . . 1 - 13
Knee Section Inclination. . . . . 1 - 13
Foot Section Inclination . . . . . 1 - 13
High Low Sleeping Surface (Hilow) . . . . . 1 - 13
Retractability. . . . . 1 - 13
Mobility/Braking and Steer System . . . . . 1 - 13
Trendelenburg/Reverse Trendelenburg . . . . . 1 - 14
Manual Operation . . . . . 1 - 14
Lockouts . . . . . 1 - 14

Automatic Contour . . . . . 1 - 14
Attendant Control Console . . . . . 1 - 15
DynamicAire Sleep Surface Control Box (Optional) . . . . . 1 - 15
Head and Foot Panels . . . . . 1 - 16
Mattress/Frame Interface . . . . . 1 - 16
Siderails . . . . . 1 - 17
Night Light . . . . . 1 - 17
Bed Exit System . . . . . 1 - 17
UL Classification . . . . . 1 - 18
Model Identification . . . . . 1 - 18
General Operation . . . . . 1 - 19
DynamicAire Sleep Surface . . . . . 1 - 19
Comfort Mode . . . . . 1 - 19
Prevention Mode . . . . . 1 - 19
Automatic Contour . . . . . 1 - 20
Bed End Panels . . . . . 1 - 20
CPR Release . . . . . 1 - 20
Head Section Elevation/Operation . . . . . 1 - 21
Enviro-Care Compatibility . . . . . 1 - 21
Motor Assemblies . . . . . 1 - 21
Thermals . . . . . 1 - 21
Manual Operation of Bed (When Electric Power is Not Available) . . . . . 1 - 22
Head Function—P8400 Beds Without CPR . . . . . 1 - 22
Head Function—P8400/P8500 Beds With CPR . . . . . 1 - 23
Hilow Function . . . . . 1 - 24
Knee Function . . . . . 1 - 25
Cranking Procedure For Manual Operation of Bed (When Electric Power is Not Available) . . . . . 1 - 26
Safety Tips . . . . . 1 - 27
Before Operating . . . . . 1 - 30
Safety . . . . . 1 - 30

Bed Position . . . . . 1 - 30
Siderails/Restraints/Patient Monitoring . . . . . 1 - 30
Brake and Steer . . . . . 1 - 31
Fluids . . . . . 1 - 31
Water Mattress . . . . . 1 - 31
Lockout Switches . . . . . 1 - 32
CPR Release . . . . . 1 - 32
Warning and Caution Labels . . . . . 1 - 33

Chapter 2: Troubleshooting Procedures

Getting Started . . . . . 2 - 3
Operational Problems . . . . . 2 - 4
Test Equipment . . . . . 2 - 4
Electrical Functions . . . . . 2 - 5
Troubleshooting Requirements . . . . . 2 - 6
Initial Actions . . . . . 2 - 7
Function Checks . . . . . 2 - 8
Final Actions . . . . . 2 - 10
Head Up Switch Failure . . . . . 2 - 11
Head Down Switch Failure . . . . . 2 - 13
Knee Up Switch Failure . . . . . 2 - 15
Knee Down Switch Failure . . . . . 2 - 17
Hilow Up Switch Failure . . . . . 2 - 19
Hilow Down Switch Failure . . . . . 2 - 21
Knee Section Fails To Raise . . . . . 2 - 24
Knee Section Fails To Lower . . . . . 2 - 27
Trendelenburg Failure . . . . . 2 - 29
Reverse Trendelenburg Failure—P8400 Models . . . . . 2 - 31
Reverse Trendelenburg Failure—P8500 Models . . . . . 2 - 34
Trendelenburg Out Control Switch Failure . . . . . 2 - 37
Reverse Trendelenburg Out Control Switch Failure—P8400 Models . . . . . 2 - 39
Reverse Trendelenburg Out Control Switch Failure—P8500 Models . . . . . 2 - 41

Bed Air Surface Failure . . . . . 2 - 43

Night Light Failure . . . . . 2 - 48

Chapter 3: Theory of Operation

Bed Control Cable Assembly Wiring Diagram—P/N 45896 . . . . . 3 - 3

Bed Wiring Diagram—P/N 45926 . . . . . 3 - 4

P.C. Board Wiring Diagram—Integrated Air Support System Board P/N 44047-01 . . . . . 3 - 5

P.C. Board Wiring Diagram—Night Light Board P/N 43200-01 (P8400 Models Only) . . . . . 3 - 6

P.C. Board Wiring Diagram—Night Light Board P/N 33577 (P8500 Models Only) . . . . . 3 - 7

P.C. Board Wiring Diagram—Night Light Board P/N 40217-02 (P8500 Models Only) . . . . . 3 - 8

P.C. Board Wiring Diagram—Bed Exit Board P/N 44482-01 . . . . . 3 - 9

P.C. Board Wiring Diagram—Control Board P/N 45701-01 (P8400 Models Only) . . . . . 3 - 10

P.C. Board Wiring Diagram—Control Board P/N 45789 (P8500 Models Only) . . . . . 3 - 11

P.C. Board Wiring Diagram—Nurse Control Panel P/N 44135-03 (P8400 Models Only) and P/N 44135-04 (P8500 Models Only) . . . . . 3 - 12

P.C. Board Wiring Diagram—Siderail Interface Board P/N 44578 . . . . . 3 - 13

Electrical Description . . . . . 3 - 14

Motors . . . . . 3 - 14

Hilow . . . . . 3 - 15

Head . . . . . 3 - 15

Knee . . . . . 3 - 15

Thermal Resets . . . . . 3 - 16

Motor Capacitors . . . . . 3 - 16

Integrated Air Support System . . . . . 3 - 16

Patient Controls . . . . . 3 - 17

Head . . . . . 3 - 17

Knee . . . . . 3 - 17

Hilow . . . . . 3 - 17
Mattress. . . . . 3 - 17
Control Board—Theory of Operation. . . . . 3 - 18
Chapter 4: Removal, Replacement, and Adjustment Procedures
DynamicAire Sleep Surface Mattress. . . . . 4 - 5
Removal . . . . . 4 - 5
Replacement . . . . . 4 - 5
Air Pendant Control . . . . . 4 - 7
Removal . . . . . 4 - 7
Replacement . . . . . 4 - 8
Control Board Assembly (P8400 Models Only). . . . . 4 - 9
Removal . . . . . 4 - 9
Replacement . . . . . 4 - 11
Control Board Assembly (P8500 Models Only). . . . . 4 - 12
Removal . . . . . 4 - 12
Replacement . . . . . 4 - 13
Air P.C. Board . . . . . 4 - 15
Removal . . . . . 4 - 15
Replacement . . . . . 4 - 17
Solenoid Assembly . . . . . 4 - 18
Removal . . . . . 4 - 18
Replacement . . . . . 4 - 19
Air Compressor Assembly . . . . . 4 - 20
Removal . . . . . 4 - 20
Replacement . . . . . 4 - 21
Motor Cover . . . . . 4 - 22
Removal . . . . . 4 - 22
Replacement . . . . . 4 - 23
Head Motor . . . . . 4 - 24
Removal . . . . . 4 - 24

Replacement . . . . . 4 - 25
Head Drive Screw Assembly . . . . . 4 - 26
Removal . . . . . 4 - 26
Replacement . . . . . 4 - 27
Head Limit Switch Assembly . . . . . 4 - 28
Removal . . . . . 4 - 28
Replacement . . . . . 4 - 29
Head Drive Screw Assembly—Slippage Correction
(8400 and 8500 Models With CPR Only) . . . . . 4 - 30
Removal . . . . . 4 - 30
Replacement . . . . . 4 - 31
Head Drive Screw Assembly—Roller Bearing
(8400 and 8500 Models With CPR Only) . . . . . 4 - 32
Removal . . . . . 4 - 32
Replacement . . . . . 4 - 33
Knee Motor . . . . . 4 - 34
Removal . . . . . 4 - 34
Replacement . . . . . 4 - 35
Knee Drive Screw Assembly . . . . . 4 - 36
Removal . . . . . 4 - 36
Replacement . . . . . 4 - 39
Knee Limit Switch . . . . . 4 - 40
Removal . . . . . 4 - 40
Replacement . . . . . 4 - 41
Hilow Motor . . . . . 4 - 42
Removal . . . . . 4 - 42
Replacement . . . . . 4 - 43
Hilow Drive Screw Assembly . . . . . 4 - 44
Removal . . . . . 4 - 44
Replacement . . . . . 4 - 45
Hilow Limit Switch (P8400 Models Only). . . . . 4 - 46

Removal . . . . . 4 - 46
Replacement . . . . . 4 - 47
Hilow Limit Switch (P8500 Models Only). . . . . 4 - 48
Removal . . . . . 4 - 48
Replacement . . . . . 4 - 50
Hilow Drive Screw Assembly—Slippage Correction . . . . . 4 - 51
Removal . . . . . 4 - 51
Replacement . . . . . 4 - 52
Hilow Drive Screw Assembly—Thrust Bearing . . . . . 4 - 53
Removal . . . . . 4 - 53
Replacement . . . . . 4 - 53
Trendelenburg Limit Switch (P8500 Models Only) . . . . . 4 - 54
Removal . . . . . 4 - 54
Replacement . . . . . 4 - 56
Trendelenburg Engage/Disengage Switches (P8500 Models Only). . . . . 4 - 57
Removal . . . . . 4 - 57
Reverse Trendelenburg Limit Switch (P8500 Models Only) . . . . . 4 - 61
Removal . . . . . 4 - 61
Replacement . . . . . 4 - 63
Reverse Trendelenburg Engage/Disengage Switches
(P8500 Models Only) . . . . . 4 - 64
Removal . . . . . 4 - 64
Replacement . . . . . 4 - 65
Brake Cam . . . . . 4 - 67
Removal . . . . . 4 - 67
Replacement . . . . . 4 - 68
Brake Block Mechanism. . . . . 4 - 69
Removal . . . . . 4 - 69
Replacement . . . . . 4 - 70
Brake Light Switch (P8500 Models Only) . . . . . 4 - 71
Removal . . . . . 4 - 71

Replacement . . . . . 4 - 72
Attendant Control Panel . . . . . 4 - 73
Removal . . . . . 4 - 73
Replacement . . . . . 4 - 73
SideCom Communication System Entertainment Control Assembly . . . . . 4 - 74
Removal . . . . . 4 - 74
Replacement . . . . . 4 - 76
Siderail Nurse Call, Lighting, or Bed Control Switch Assembly . . . . . 4 - 77
Removal . . . . . 4 - 77
Replacement.. . . . . 4 - 78
Siderail LED Indicator . . . . . 4 - 79
Replacement . . . . . 4 - 79
Siderail . . . . . 4 - 80
Removal . . . . . 4 - 80
Replacement . . . . . 4 - 81
Knee Limit Switch Adjustment . . . . . 4 - 82
Head Limit Switch Adjustment . . . . . 4 - 83
Hilow Limit Switch Adjustment. . . . . 4 - 85
Hilow Up Limit Switch Adjustment (P8500 Models Only). . . . . 4 - 86
Hilow Down Limit Switch Adjustment (P8500 Models Only) . . . . . 4 - 88
Trendelenburg Limit Switch Adjustment (P8500 Models Only) . . . . . 4 - 90
Reverse Trendelenburg Limit Switch Adjustment
(P8500 Models Only) . . . . . 4 - 91
Caster Adjustment. . . . . 4 - 92
Siderails—Hard To Rotate Up Or Down . . . . . 4 - 94
Siderails—Frozen . . . . . 4 - 95

Chapter 5: Parts List

Warranty . . . . . 5 - 3
Ordering Service Parts . . . . . 5 - 5
Exchange Policy . . . . . 5 - 7
In-Warranty Exchanges . . . . . 5 - 7

Out-of-Warranty Exchanges . . . . . 5 - 7
Recommended Spare Parts List . . . . . 5 - 8
Base—P/N 49210COMM. . . . . 5 - 14
Intermediate Frame Assembly . . . . . 5 - 18
Trendelenburg Assembly (P8500 Models Only) . . . . . 5 - 22
CPR Module—M45785 (P8400 Models Only) . . . . . 5 - 26
CPR Module—M45785 (P8400 Models Only) . . . . . 5 - 28
Nightlight Module—M45782-02 (P8400 Models Only) . . . . . 5 - 32
Sleep Surface Module. . . . . 5 - 34
Pendant Control Assembly—P729A . . . . . 5 - 38
Mattress—P923CD and P923ED . . . . . 5 - 40
Dynamic Sleep Surface—M5038 (P8400 Models)/M5039 (P8500 Models). . . . . 5 - 42
Head and Foot Panel Assemblies—P4069A4/P4048B/P4069A5/P4059. . . . . 5 - 46
Electrical—P/N 49207COMM . . . . . 5 - 48
Footrail Module—M45873-01 . . . . . 5 - 52
Footrail Module—M45873-04 . . . . . 5 - 54
Headrail Module—49211 . . . . . 5 - 56
Headrail Module . . . . . 5 - 64
Headrail Module (Bed Functions Only) . . . . . 5 - 68
Nurse Control Panel—P/N 44135-03/04 . . . . . 5 - 72
Control Box Assembly—P/N 44680-01. . . . . 5 - 74
Head Motor Without CPR and Drive Unit Assemblies (P8400 Models Only) . . . . . 5 - 76
Head Motor and Drive Unit Assemblies with CPR (P8500 Models Only) . . . . . 5 - 80
Knee Motor and Drive Unit Assemblies. . . . . 5 - 84
Hilow Motor and Drive Unit Assemblies. . . . . 5 - 88
P.C. Board Assembly—Integrated Air Support System Board P/N 44047-01 . . . . . 5 - 92
P.C. Board Component Layout—Nightlight with Scale P/N 43200-01 (P8400 Models Only) . . . . . 5 - 96

P.C. Board Component Layout—Nightlight P.C. Board P/N—33577 (P8500 Models Only) . . . . . 5 - 98

P.C. Board Component Layout—Nightlight Assembly P/N 39613-02 (P8500 Models Only) . . . . . 5 - 100

P.C. Board Component Layout—Bed Exit P.C. Board P/N 44482-01 . . . . . 5 - 102

P.C. Board Component Layout—Control Board Assembly P/N 45701 (P8400 Models Only) . . . . . 5 - 104

P.C. Board Component Layout—Control Board Assembly P/N 45789 (P8500 Models Only) . . . . . 5 - 108

P.C. Board Component Layout—Interface Board P/N 44578 . . . . . 5 - 112

Chapter 6: General Procedures

Cleaning and Care . . . . . 6 - 3

Steam Cleaning . . . . . 6 - 3

Suggestions for Easy Maintenance . . . . . 6 - 3

Hard to Clean Spots . . . . . 6 - 3

Disinfection . . . . . 6 - 3

Lubrication Requirements . . . . . 6 - 4

Preventive Maintenance . . . . . 6 - 5

Preventive Maintenance Schedule . . . . . 6 - 6

Preventative Maintenance Checklist . . . . . 6 - 8

Tool and Supply Requirements . . . . . 6 - 9

Extraction Tools . . . . . 6 - 10

Chapter 7: Accessories

Siderail Option ID . . . . . 7 - 3

Accessories . . . . . 7 - 4

Fracture Frame Adapter Socket—P847B/P847C . . . . . 7 - 5

Installation . . . . . 7 - 5

Removal . . . . . 7 - 5

Roller Bumper Assembly—P818C08 . . . . . 7 - 6

Installation . . . . . 7 - 6

Removal . . . . . 7 - 7

Cane Bumper Assembly—P284B-33 . . . . . 7 - 8

Installation . . . . . 7 - 8
Removal . . . . . 7 - 9
Trapeze Support Assembly—P844 (P8400 Models Only). . . . . 7 - 10
Installation . . . . . 7 - 10
Removal . . . . . 7 - 11
Trapeze Support Assembly—P844A-48 or P844A-33
(P8500 Models Only) . . . . . 7 - 12
Installation . . . . . 7 - 12
Removal . . . . . 7 - 13
Bed Extender Assembly—P9913A . . . . . 7 - 14
Installation . . . . . 7 - 14
Removal . . . . . 7 - 15

NOTES:

1

Chapter 1
Introduction

Chapter Contents

Purpose of this Manual . . . . . 1 - 5
Who Should Use this Manual . . . . . 1 - 5
Organization of this Manual . . . . . 1 - 5
Chapter 1: Introduction . . . . . 1 - 5
Chapter 2: Troubleshooting Procedures . . . . . 1 - 5
Chapter 3: Theory of Operation . . . . . 1 - 5
Chapter 4: Removal, Replacement, and Adjustment Procedures . . . . . 1 - 5
Chapter 5: Parts List . . . . . 1 - 6
Chapter 6: General Procedures . . . . . 1 - 6
Chapter 7: Accessories . . . . . 1 - 6
Typographical Conventions Used in this Manual. . . . . 1 - 7
Introduction to the Retractable Bed . . . . . 1 - 8
Operating Precautions. . . . . 1 - 8
Bed Positions . . . . . 1 - 8
Specifications . . . . . 1 - 12
Physical Description . . . . . 1 - 12
Head Section Inclination. . . . . 1 - 12
CPR Release (Optional on P8400 models). . . . . 1 - 13
Knee Section Inclination. . . . . 1 - 13
Foot Section Inclination . . . . . 1 - 13
High Low Sleeping Surface (Hilow) . . . . . 1 - 13
Retractability. . . . . 1 - 13
Mobility/Braking and Steer System . . . . . 1 - 13

Trendelenburg/Reverse Trendelenburg . . . . . 1 - 14
Manual Operation . . . . . 1 - 14
Lockouts . . . . . 1 - 14
Automatic Contour . . . . . 1 - 14
Attendant Control Console . . . . . 1 - 15
DynamicAire Sleep Surface Control Box (Optional) . . . . . 1 - 15
Head and Foot Panels . . . . . 1 - 16
Mattress/Frame Interface . . . . . 1 - 16
Siderails . . . . . 1 - 17
Night Light . . . . . 1 - 17
Bed Exit System . . . . . 1 - 17
UL Classification . . . . . 1 - 18
Model Identification . . . . . 1 - 18
General Operation . . . . . 1 - 19
DynamicAire Sleep Surface . . . . . 1 - 19
Comfort Mode . . . . . 1 - 19
Prevention Mode . . . . . 1 - 19
Automatic Contour . . . . . 1 - 20
Bed End Panels . . . . . 1 - 20
CPR Release . . . . . 1 - 20
Head Section Elevation/Operation . . . . . 1 - 21
Enviro-Care Compatibility . . . . . 1 - 21
Motor Assemblies . . . . . 1 - 21
Thermals . . . . . 1 - 21
Manual Operation of Bed (When Electric Power is Not Available) . . . . . 1 - 22
Head Function—P8400 Beds Without CPR . . . . . 1 - 22
Head Function—P8400/P8500 Beds With CPR . . . . . 1 - 23
Hilow Function . . . . . 1 - 24
Knee Function . . . . . 1 - 25
Cranking Procedure For Manual Operation of Bed
(When Electric Power is Not Available) . . . . . 1 - 26

Safety Tips . . . . . 1 - 27
Before Operating. . . . . 1 - 30
Safety . . . . . 1 - 30
Bed Position . . . . . 1 - 30
Siderails/Restraints/Patient Monitoring . . . . . 1 - 30
Brake and Steer. . . . . 1 - 31
Fluids . . . . . 1 - 31
Water Mattress . . . . . 1 - 31
Lockout Switches . . . . . 1 - 32
CPR Release . . . . . 1 - 32
Warning and Caution Labels . . . . . 1 - 33

NOTES:

Purpose of this Manual

This manual provides the information required for Hill-Rom Retractable bed normal operation and maintenance. It also includes a complete parts list, in chapter 5, for ordering replacement components

Who Should Use this Manual

This manual is intended to be used by facility authorized maintenance personnel only. Failure to observe this restriction can result in serious damage to material and/or severe injury to people.

Organization of this Manual

This service manual contains seven chapters.

Chapter 1: Introduction

You are currently reading chapter 1. This chapter defines the manual's purpose and who should use the information in the manual. It also describes the manual's organization and explains the various typographical conventions used throughout the manual. Included is an introduction to the product, specifications, model identification, safety tips, and examples of caution and warning labels found on the Retractable bed.

Chapter 2: Troubleshooting Procedures

Chapter 2 contains the proper Retractable bed troubleshooting procedures. It also includes a troubleshooting introduction, initial actions, function checks, final actions, and repair analysis procedures.

Chapter 3: Theory of Operation

Chapter 3 contains the theory of operation for the installed electrical controls used on the Retractable bed. Included are overall wiring and block diagrams, cable wiring diagrams, connector pinouts, component schematics, and subsystem theories.

Chapter 4: Removal, Replacement, and Adjustment Procedures

Chapter 4 contains removal, replacement, and adjustment procedures for the components of the Retractable bed.

Chapter 5: Parts List

Chapter 5 contains Hill-Rom's warranty, replacement part ordering procedure, exchange policy, recommended spare parts lists, illustrated parts lists, and general service information.

Chapter 6: General Procedures

Chapter 6 contains cleaning and care, lubrication requirements, preventive maintenance, and Retractable bed tool and supply requirements.

Chapter 7: Accessories

Chapter 7 includes available Retractable bed accessories, illustrations, and mounting instructions.

Typographical Conventions Used in this Manual

This manual contains different typographical conventions designed to enhance readability and understanding of its content.

- Standard text—used for standard text throughout the manual.
- **Boldface text**—emphasizes a word or phrase.
- **NOTE:**—sets apart special information or important instruction clarification.
- The symbol below highlights a WARNING or CAUTION:

Figure 1-1. Warning and Caution Symbol

  – A WARNING identifies situations or actions that may affect patient or user safety. Disregarding a warning could result in patient or user injury.
  – A CAUTION points out special procedures or precautions that personnel must follow to avoid equipment damage.

- The symbol below highlights an electrical shock hazard WARNING:

Figure 1-2. Electrical Shock Hazard Warning

Introduction to the Retractable Bed

Operating Precautions

Before operating the Retractable bed, be sure that you have read and understand in detail the contents of this manual. It is important that you read and strictly adhere to the aspects of safety. Any reference to a side of the bed is from the patient's view lying in the bed on his or her back.

Bed Positions

The Retractable bed has four sections: the head, seat, knee, and foot (see figure 1-3 on page 1-8). Bed positions are shown in figures 1-3 through 1-6.

Figure 1-3. Bed Location Description

Head section articulation position

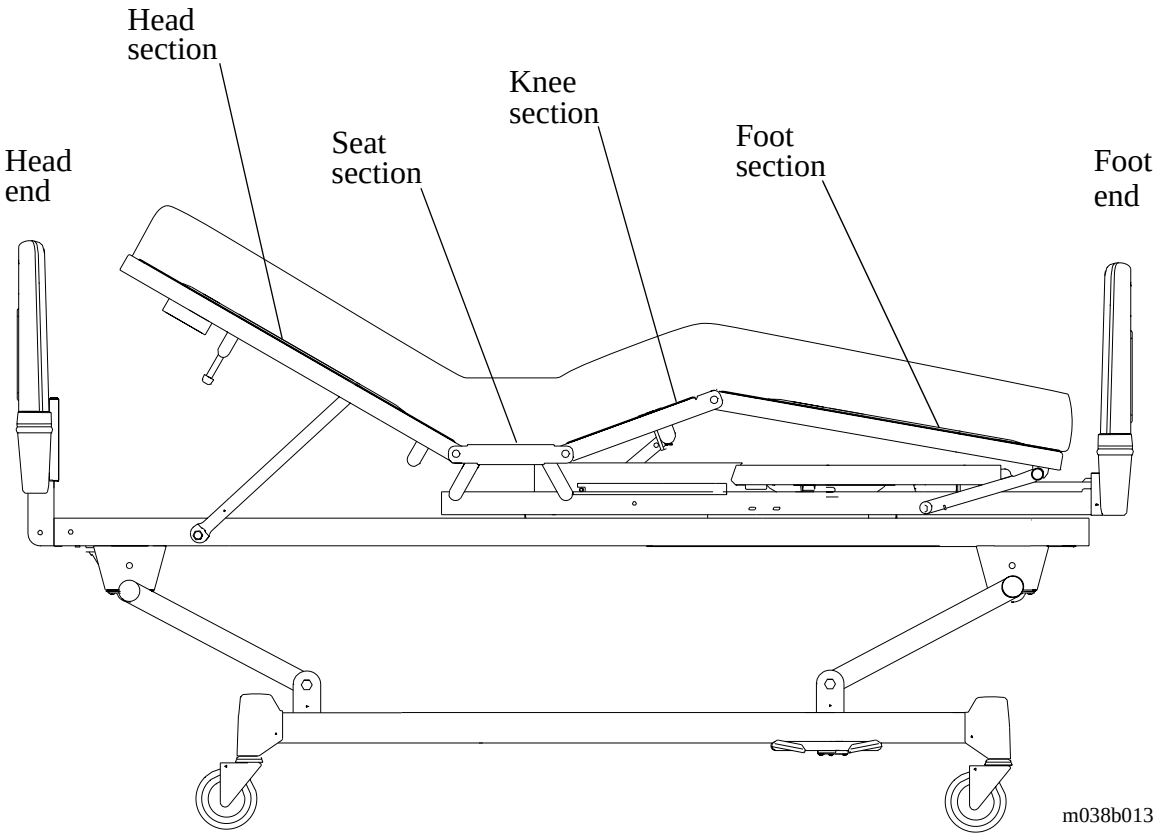

Figure 1-4. Hilow Positions

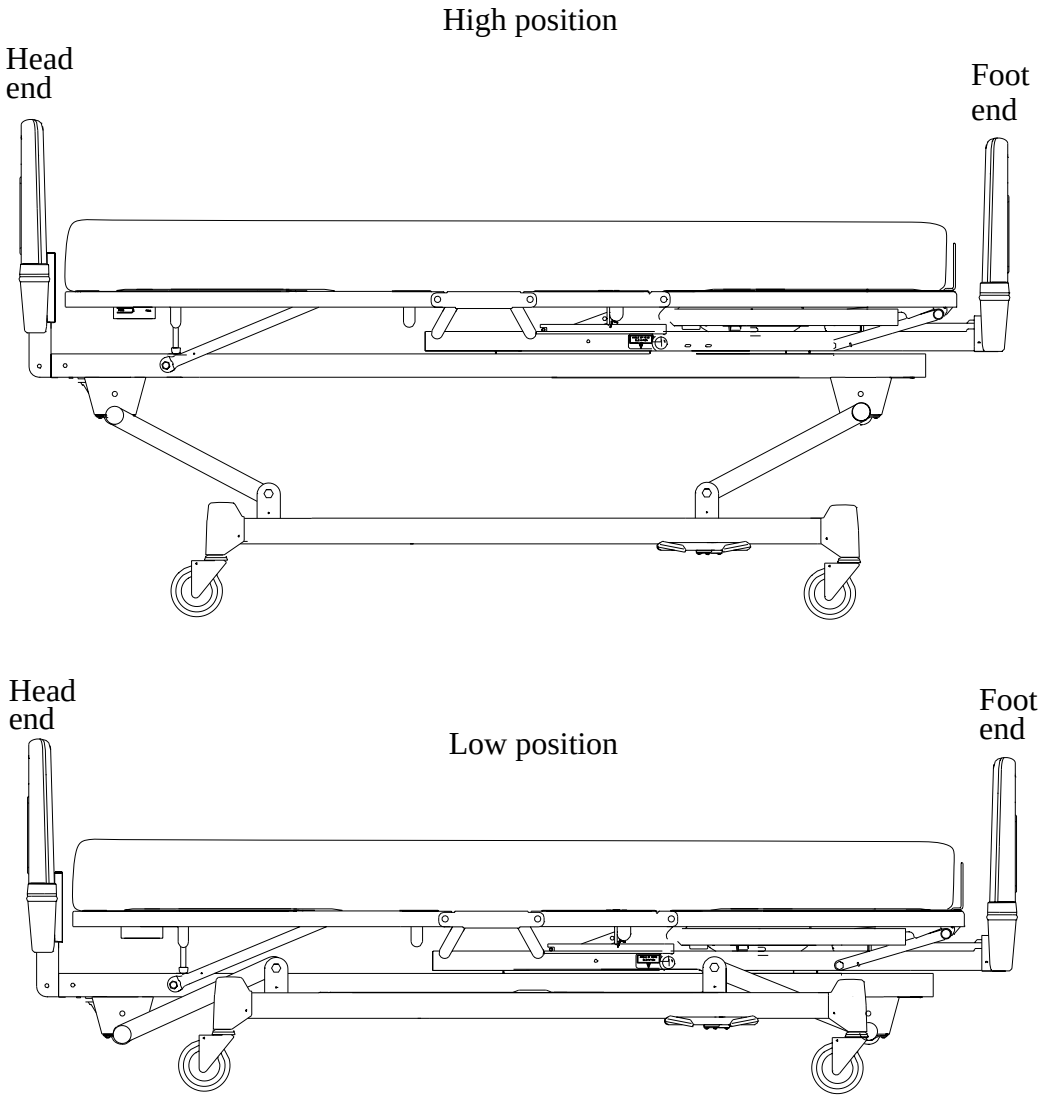

m038b014

Figure 1-5. Automatic Contour Position

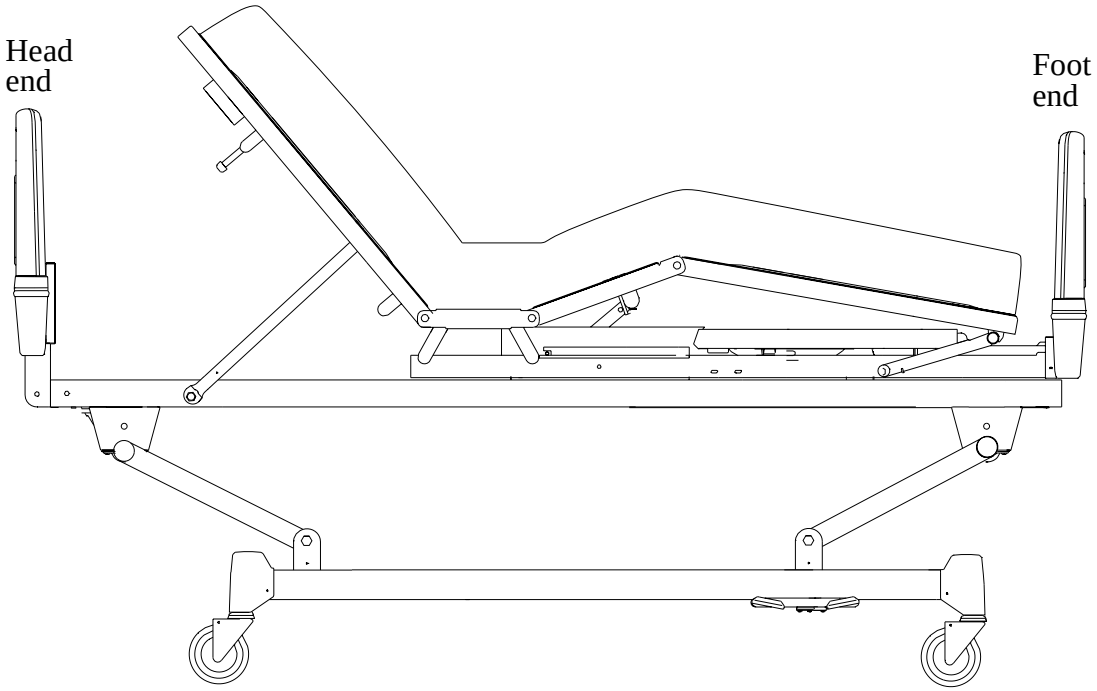

m038b016

Figure 1-6. Trendelenburg/Reverse Trendelenburg Positions

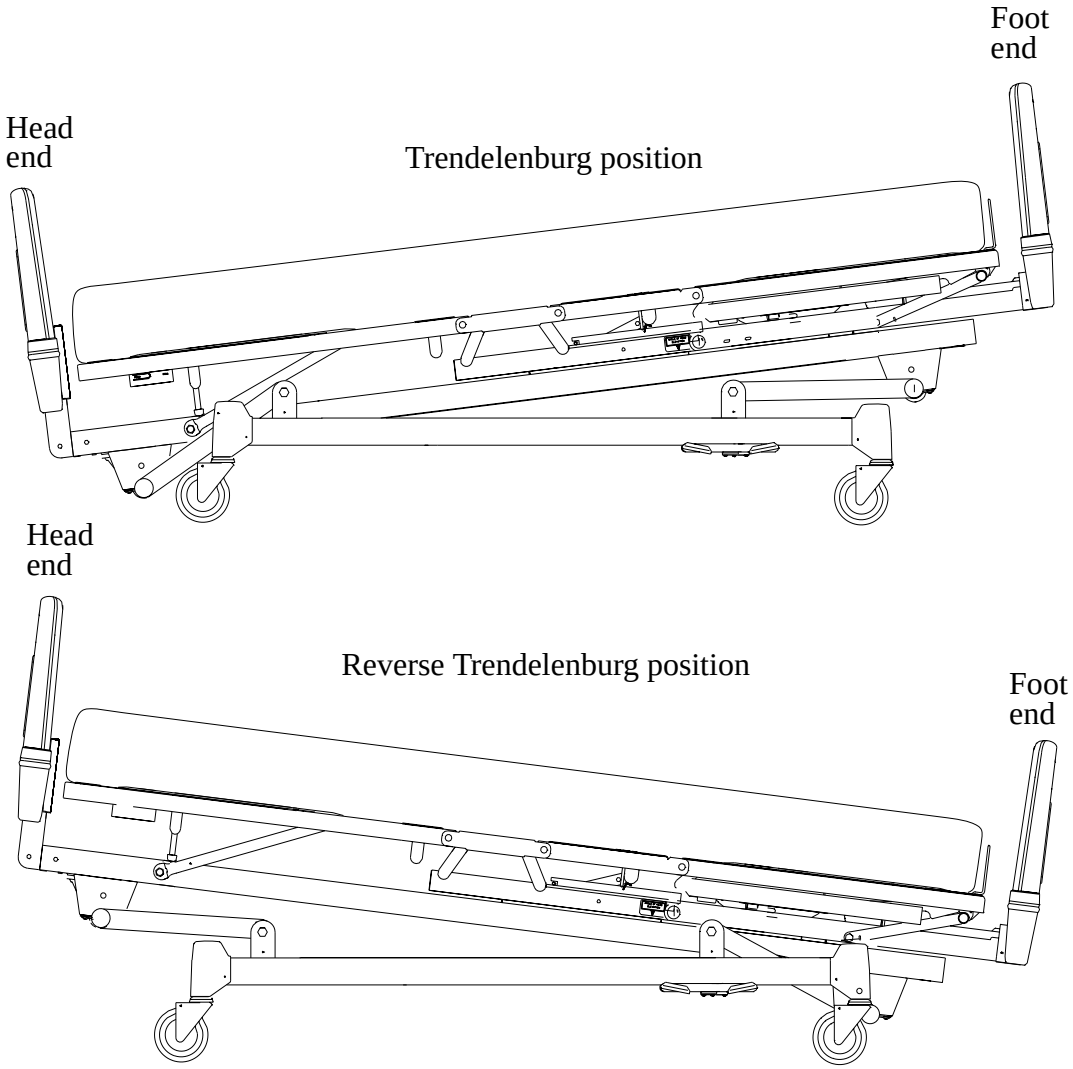

Specifications

Physical Description

See table 1-1 on page 1-12 for Retractable bed specifications.

Table 1-1. Specifications

Feature	Dimension
Overall length (P8400 models without bumpers)	93"-94"(236.2-238.8 cm)
Overall length (P8500 models without bumpers)	91"-92" (231.1-233.7 cm)
Overall width (siderails up)	42 1/4" (107.3 cm)
Overall width (siderails stored)	37" (94 cm)
Minimum head siderail to foot siderail gap	5 1/4" (13.3 cm)
Clearance under base (5" casters) (P8500 models)	7 1/4" (18.4 cm)*
Clearance under base (5" casters) (P8400 models-new style)	7 1/4" (18.4 cm)*
Clearance under base (5" casters) (P8400 models-old style)	8" (20.3 cm)*
Wheel base, center to center—length	53" (134.6 cm)
Wheel base, center to center—width	28 1/4" (71.75 cm)
Maximum safe working load	500 lb (227 kg)
***NOTE:** The dimensions noted above do not include the optional night light feature.	

Head Section Inclination

The bed is mechanized such that the occupant may elevate the head section by voluntary selection of a finger touch activator. The head up/down activators are of a momentary type. The activators are pictorially labeled to indicate their function. The activators are fixed in relation to the head section within easy access of the occupant, regardless of degree of inclination.

CPR Release (Optional on P8400 models)

The head section can be mechanized for emergency lowering. A releasing mechanism is included for rapid lowering. The release mechanism requires positive (intentional) action for release.

Knee Section Inclination

The bed is mechanized such that the occupant may elevate the knee section by voluntary selection of a finger touch activator. The knee up/down activators are of a momentary type. The activators are pictorially labeled to indicate their function. The activators are fixed in relation to the head section within easy access of the occupant, regardless of degree of inclination.

Foot Section Inclination

The foot section may be independently elevated by manually raising and engaging the support arm. Such positioning does not affect other bed features or operation.

High Low Sleeping Surface (Hilow)

The bed is mechanized such that a patient attendant may raise or lower the sleeping surface to facilitate examination or bed ingress/egress. The activators are pictorially labeled and fixed in relation to the head section of the bed. The activators face toward the attendant position, but are accessible for occupant activation. The activator(s) are of a momentary type contact.

Retractability

The bed is mechanized such that the upper frame moves toward the head end in conjunction with the head up motion. This aspect is to afford an approximate fixed location for occupant access to peripheral fixtures (e.g. storage cabinets), as afforded by the normal flat position.

Mobility/Braking and Steer System

The bed is mounted on four precision bearing swivel type casters. The standard caster has 5" diameter molded rubber wheels and a minimum tread width of 31/32". Wheels have precision bearing axles and swivels for high mobility. They are easily removed for cleaning or replacing. The casters are also available in optional 4" diameters.

The caster braking system is activated by a foot pedal located on either side, to allow single foot operation to lock two casters (wheels and swivels). Activation of the steer system locks the swivel on one caster (steer lock) to allow for easy steering of the bed. Foot pedals for operation of the braking system and steering system are located as indicated in convenient, accessible locations on both sides of the bed. They are identified clearly as to proper operation of the central locking system.

Trendelenburg/Reverse Trendelenburg

The bed is mechanized such that Trendelenburg or Reverse Trendelenburg may be achieved from the attendant control console only.

There is a visual indicator showing the degree and inches of Trendelenburg as it is being obtained. Use the Trendelenburg/Reverse Trendelenburg out switch to automatically bring the bed back out of either Trendelenburg position.

Manual Operation

The bed is mechanized such that the hilow, head, and knee positions may be manually moved in case of emergency, power failure, or remote location (e.g. hallway).

Lockouts

Lockouts are provided in the attendant control console to inhibit patient operation of the head, knee, and hilow features. Activation of the knee lockout precludes knee section movement for contour when the head operating switch is actuated.

Automatic Contour

The bed is mechanized such that an automatic contour position (head up/knee up) may be attained by voluntary selection of the head up activator. This function is additionally mechanized such that switching the knee function lockout switch in the attendant control console to the off position inhibits the knee rising when the head up switch is activated. Automatic contour position can be operated to the flat position by the patient, to allow easy access to the bed.

Attendant Control Console

The attendant control console is located at the foot end of the bed. The indicator lights located in this console are visible at all times. Access is limited so that the bed occupant cannot accidentally activate these functions.

The control console houses:

- Trendelenburg/Reverse Trendelenburg inch/degree indicator
- Reverse Trendelenburg control lever
- Hilow/Trendelenburg/Reverse Trendelenburg out control switch
- Hilow function lockout switch
- Knee function lockout switch
- Head function lockout switch
- Bed motor power lockout switch

The indicator panel contains:

- Motor power off indicator light
- Brake not set indicator light (P8500 models only)
- Bed not in low position indicator light
- Loss of ground/reverse polarity light

DynamicAire Sleep Surface Control Box (Optional)

The DynamicAire Sleep Surface control box is located at the foot end of the bed, below the attendant control console. The control box's indicator lights are visible at all times. Access is limited so that the bed occupant cannot accidentally activate any functions on this control box.

The DynamicAire Sleep Surface control box contains:

- DynamicAire Sleep Surface system power lockout switch
- DynamicAire Sleep Surface mattress adjustment
- Prevention/comfort selector switch
- DynamicAire Sleep Surface power indicator light
- Excessive airloss indicator light

Head and Foot Panels

The head and foot panels are removable from the bed. The panels provide ease of bed mobility and steering control without causing bed damage, panel damage, or inhibiting bed functions. The head panel can be used for CPR applications.

Mattress/Frame Interface

The mattress supporting adjustable frame is 36" x 82" (91.4 cm x 208.3 cm) (P8500 models) or 36" x 84" (91.4 cm x 213.4 cm) (P8400 models) and is equipped with national fabric, zinc plated after the fabric is assembled. The fabric has approximately 2" x 4" space with 92 helical springs (12 gauge wire, zinc plated) to support the fabric on four sides. The fabric links are made of 0.114" diameter (minimum) direct drawn industrial quality wire. Smaller wire is not acceptable.

Or

The mattress supporting adjustable frame is 36" x 82" (91.4 cm x 208.3 cm) (P8500 models) or 36" x 84" (91.4 cm x 213.4 cm) (P8400 models) and is covered with four 16 gauge (0.060") thick formed steel panels. The panels have formed down outer surfaces to prevent sharp edges.

Only steel sleep surfaces have restraint attachments. Both steel and fabric sleep surfaces have drainage bag holders and a mattress stop. The restraint attachments are bolted to the head and foot sections. The restraint attachments and drainage bag holders are made of three gauge (0.243") diameter steel wire. The adjustable frame has a rigid mattress stop attached to the foot section that can be folded down when not in use. The mattress stop is made of 0.188" x 0.750" wide round edge strip steel, not less that 3.750" (9.53 cm) high.

IV Rod Accommodation

There are six locations to accommodate the installation of an IV rod—two at the head end, two in the seat section, and two at the foot end. Each location has sufficient structural integrity that fracture frame equipment may be used without degradation of function or structure.

Docking/Wall Protection

The bed can be equipped with either Enviro-Care docking bumpers or wall protecting roller bumpers. (Can be retrofitted as desired.)

Siderails

The bed has two sectionalized (half length) head siderails as standard equipment. The siderails retract and are storable within the confining limits of the sleep surface frame.

Each sectionalized head siderail contains patient (head and knee) controls and a hilow control. Each sectionalized head siderail accepts the Patient Phone.

There are additional siderail options available. The bed can be equipped with additional half length foot siderails. The additional foot siderails work with the standard sectionalized head siderail. The foot siderails are equipped with an intermediate stop, allowing greater access for occupant ingress/egress.

The bed is configured such that the following functions may be included as part of one or both of the head siderails:

- Nurse call activator (both sides required)
- Ambient light actuator (both sides required)
- Entertainment center actuator (music, TV, radio) (both sides required)
- Patient exit on/off switch, reset switch (illuminated), and indicator light (left side only)
- Patient Phone

Night Light

The bed can contain an optional low level night light that illuminates the general foot contact area for ingress/egress. The light is protected against breakage. Lighting is configured such that adjacent patient locations have a minimal annoyance factor.

Bed Exit System

The bed exit system is an optional feature. The bed can be mechanized such that a warning signal is placed through the nurse call system if a patient exits the bed. This function can be selected by activating the on/off switch in the head siderail. There is a selectable 2, 4, or 6 second delay in the audible signal. The selectable delay switch and reset switch are located in the head siderail.

NOTE:
The bed exit system’s effectiveness can vary depending upon bed articulation, patient weight, and the type of mattress used.

UL Classification

All electrical components including the power supply cord of the Retractable bed are UL approved hospital grade for this application.

Model Identification

Below are the model identifications for the Retractable bed.

Table 1-2. Model Identification

Part Number	Description
P8400	Remanufactured Hill-Rom P840 series bed
P8500	Remanufactured Hill-Rom P850 series bed

General Operation

The Hill-Rom Retractable bed incorporates independent motors to achieve the following operational features:

- Bed height—up/down
- Foot section—up/down
- Head section—up/down
- Trendelenburg—in/out
- Reverse Trendelenburg—in/out
- Dynamic Sleep Surface—inflate/deflate

These features are governed by circuit board logic. They are controlled by the patient or attendant using the pendant control, or by the attendant using the attendant control console and DynamicAire Sleep Surface control box.

DynamicAire Sleep Surface

The optional DynamicAire Sleep Surface includes two air bladders encompassed with foam. Electronics monitor this closed integrated air support system to ensure proper inflation. The system operates in two modes, comfort and prevention. The DynamicAire Sleep Surface is non-reversible and easy to remove. Its life expectancy is five years or more, based on Hill-Rom's recommended operating and cleaning procedures.

Comfort Mode

The occupant can adjust the firmness or softness of the DynamicAire Sleep Surface by activating a momentary type switch located in the pendant control. In addition, the attendant can adjust the pressure from the DynamicAire Sleep Surface control console, located at the foot end of the bed.

Prevention Mode

In the prevention mode, neither the occupant nor the attendant can control the firmness or softness of the DynamicAire Sleep Surface. The system automatically maintains the air bladders at: (values at P.S.I.G.)

- Bottom bladder 0.4 +0.1/-0.15
- Top bladder 0.20 ±.05

The system maintains this pressure regardless of bed articulation.

Automatic Contour

Every Retractable bed has a feature called automatic contour. This feature raises the knee section of the bed up to a full 15° automatically as you raise the head section. Automatic contour prevents patients from sliding to the foot end of the bed when the head section is raised. Limit switches control this feature. If automatic contour is not wanted, position the knee lockout switch, located at the attendant control console, to off. This switch also eliminates the normal operation of the knee function. You can temporarily disable the automatic contour function by simultaneously depressing the head up and knee down on the siderail.

Bed End Panels

Retractable beds have post-type mountings for bed end panels. The bed end panels fit over two vertical mounting posts located at each end of the bed. You remove the panels by lifting them vertically off the mounting posts.

There are two different bed end panels. One panel type features one piece blow molded plastic construction with internal reinforcing ribs and a high pressure laminate (HPL) decorator panel. These panels also include steel tubing inserts for mounting purposes. The other panel type features wood construction.

If it becomes necessary to replace parts, or an entire bed end panel, obtain the correct part numbers from the parts list located in chapter 5 of this manual. If you order an HPL decorator panel, or an entire bed end panel, you must specify the color of the decorator panel. If you do not know the color, send a 2" or 3" inch square of the old HPL decorator panel for color matching.

CPR Release

The CPR release is an optional feature on P8400 model beds and is standard on P8500 models. Beds with the Instant CPR feature have one CPR release handle located on each side at the head end of the head section. Use either CPR release to lower the head section in an emergency.

WARNING:
Activate only one CPR release handle in an emergency. The head section will not lower if both handles are activated at the same time.

The CPR release lowers the head section from any elevated position. You activate it by pushing a button on the CPR release handle and pulling out on the handle. Continue to pull out the handle until the head section is flat.

Head Section Elevation/Operation

Raise the head section using the controls in the siderail or, if electrical power is not available, by manually cranking the head drive screw assembly. See the section “Cranking Procedure For Manual Operation of Bed (When Electric Power is Not Available)” on page 1-26.

NOTE:
P8400 and P8500 beds with CPR cannot be manually cranked to raise the head section when no electrical power is available.

Enviro-Care Compatibility

The Retractable beds are fully compatible with Enviro-Care if they have the model P284B-33 cane bumpers attached to the base section of the bed. (See the section “Cane Bumper Assembly—P284B-33” on page 7-8 for identification of the cane bumpers.) Model P818C-08 bumpers are also available on Retractable beds. These bumpers are not compatible with Enviro-Care.

NOTE:
P284B-33 Taupe (brown) is the only color available.
P818C-08 Top/bottom mount for light neutral (off-white) colored beds only
P818C-08 Top/bottom mount for taupe (brown) colored beds only

Motor Assemblies

Thermals

Thermals are an integral part of the motors, protecting them in the event there is an overload condition. They stop the motor automatically if it heats up to a certain temperature. The motor will not run again until the thermal is reset. All bed motors are equipped with automatic thermal resets that allow the motor to operate after it has cooled down.

Manual Operation of Bed (When Electric Power is Not Available)

Head Function—P8400 Beds Without CPR

SHOCK HAZARD:
Unplug the unit from its power source before inserting the IV rod for manual operation. Failure to do so could result in personal injury or equipment damage.

You can raise or lower the bed using a Hill-Rom P2217 IV rod as a crank. Access the head screw assembly (A) from the head end of the bed (see figure 1-7 on page 1-22). See the section “Cranking Procedure For Manual Operation of Bed (When Electric Power is Not Available)” on page 1-26.

Figure 1-7. Head Function—P8400 Beds Without CPR

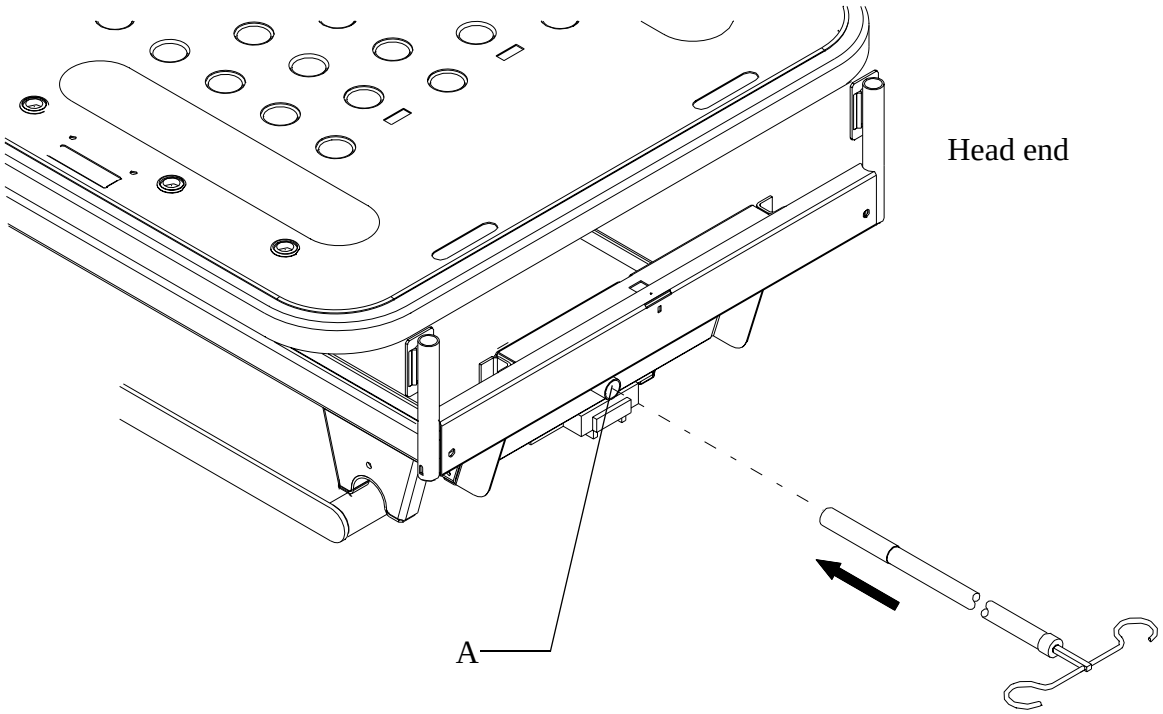

m038b033

Head Function—P8400/P8500 Beds With CPR

You can raise or lower the bed using the CPR release at the head end of the bed. Depress the CPR button, and pull out on the handle. Manually raise or lower the head section to the desired position. Release the CPR handle (see figure 1-8 on page 1-23).

Figure 1-8. Head Function—P8400 Beds With CPR

NOTE:
P8400 model is shown.

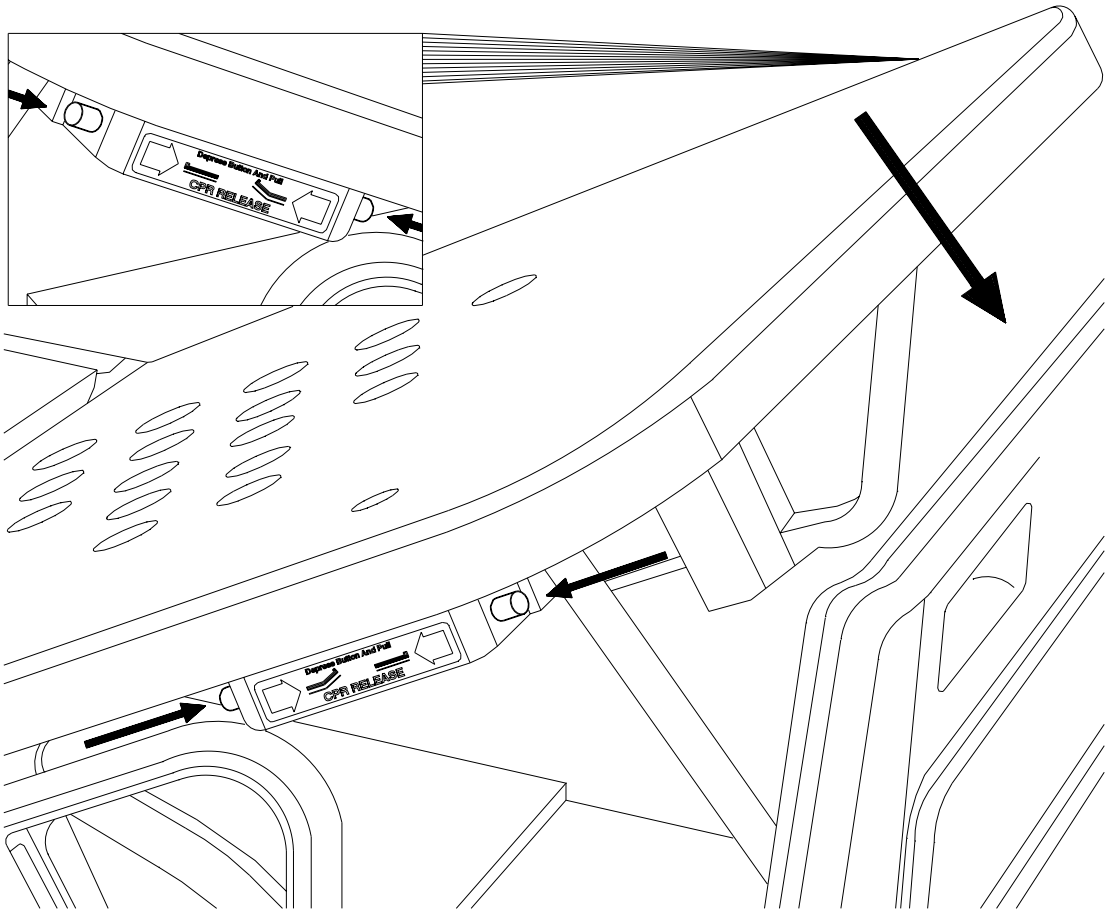

m038b034

Hilow Function

SHOCK HAZARD:
Unplug the unit from its power source before inserting the IV rod for manual operation. Failure to do so could result in personal injury or equipment damage.

You can raise or lower the bed using the Hill-Rom P2217 IV rod as a crank. Access the hilow screw assembly (A) from the foot end of the bed (see figure 1-9 on page 1-24). See the section “Cranking Procedure For Manual Operation of Bed (When Electric Power is Not Available)” on page 1-26.

NOTE:
Insert the IV rod slightly off angle to crank the hilow function.

Figure 1-9. Hilow Function

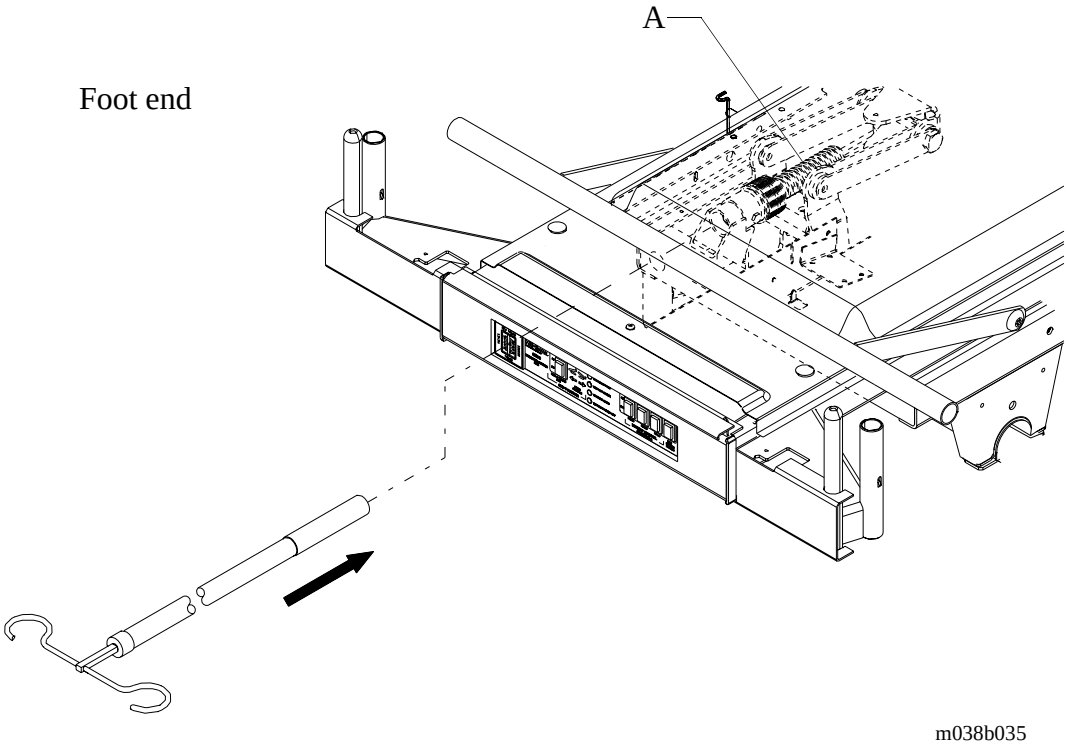

Knee Function

You can manually flatten or elevate the knee section of the bed. However, there is no manual crank procedure.

To flatten the knee section, lift the knee section, and pull up on handle (A) at the same time. Reverse the procedure to lock the knee section back into place.

NOTE:
Lock the knee section back into place for proper operation. The knee motor will run when activated, but will not lift the knee section if not locked into place.

To manually elevate the knee section of the bed, remove the two screws (B), detach the spring (C), and pull out the handle (A) (see figure 1-10 on page 1-25).

Figure 1-10. Knee Function

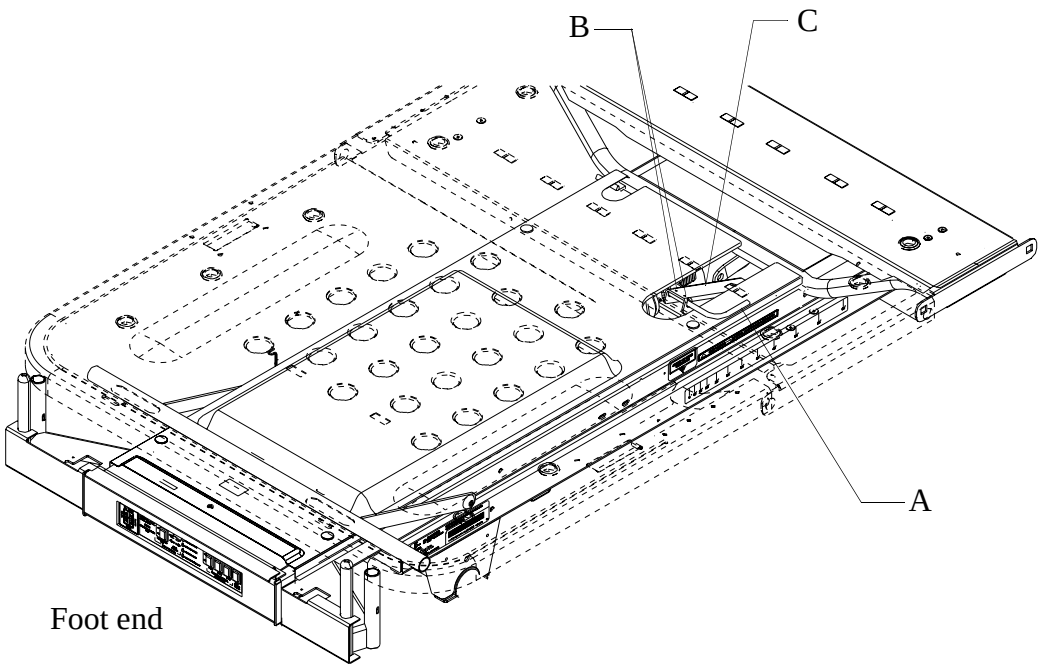

m038b036

If the bed has a hard pan sleep surface, it may be necessary to lift the head section to gain access to the two screws (B) and the spring (C).

NOTE:
This procedure will allow for knee elevation during service usage only. The knee function cannot be manually elevated while a patient occupies the bed.

Cranking Procedure For Manual Operation of Bed (When Electric Power is Not Available)

SHOCK HAZARD:
Unplug the unit from its power source before inserting the IV rod for manual operation. Failure to do so could result in personal injury or equipment damage.

1. Unplug the bed from its power source.
2. Extend and insert the Hill-Rom P2217 IV rod through the access hole in the head end channel until it engages the roll pin in the end of the screw assembly.
3. Turn the IV rod either clockwise to raise, or counterclockwise to lower the function.
4. When the function is at the desired setting, remove the IV rod from the screw assembly.

SHOCK HAZARD:
Remove the IV rod before plugging the bed into its power source. Failure to do so could result in personal injury or equipment damage.

Safety Tips

WARNING:
Establish policies and procedures to train and educate personnel on the hazards associated with electric beds. It is not advisable or necessary for personnel to have their entire body below the sleep surface and within the confines of the bed. Whenever a bed is being cleaned or serviced, unplug the bed's from its power source. If service personnel need to get under the bed, block up the bed frame as an added precaution.

WARNING:
Be certain that hands, feet, and equipment are well clear of the bed frame assemblies when changing bed positions, both manually or electrically.

WARNING:
The brakes should always be set when the bed is in position and especially during patient transfers. Patients often use the bed for support when getting into or out of bed and could be injured if the bed unexpectedly moves. After setting the brakes, push and pull the bed to ensure stability.

WARNING:
The siderails should always be in the raised and latched position when resident is left unattended. When raising the siderails, an audible click indicates that the siderail is completely raised and locked in place. To ensure the siderails are latched, give them a gentle tug in the down direction. **Siderails are intended as a reminder, not as a restraint device.** Appropriate medical personnel must determine the level of restraint necessary to ensure a resident will remain safely in bed.

WARNING:
When transporting the bed, either individually or as part of a transport team, guide the bed from the sides or corners, not the end. This will help keep legs clear of the frame and feet clear of the caster base.

WARNING:
Only qualified service personnel should do troubleshooting on the Retractable bed. Before beginning any troubleshooting on the Retractable bed, be sure that you have read and understand the information in the troubleshooting section. Troubleshooting by unauthorized personnel could result in personal injury or equipment damage.

WARNING:
Activate only one CPR release handle in an emergency. The head section will not lower if both handles are activated at the same time.

WARNING:
Refer to your VOM owners manual for complete and detailed information regarding the operation of your VOM.

WARNING:
Unplug the bed from its power source before checking ohms/resistance measurements. Failure to disconnect line voltage to the bed can damage the VOM.

WARNING:
Ensure the gasket is installed on the motor cover before assembly. Moisture can possibly get under the motor cover if the gasket is not installed. This can cause component failure and possible self activation of the bed. See the section “Safety Tips” on page 1-27 for additional information.

WARNING:
Only facility-authorized maintenance personnel should perform preventive maintenance on the Retractable Bed. Preventive maintenance performed by unauthorized personnel could result in personal injury or equipment damage.

CAUTION:
Do not lower the foot section from the folded up position with the knee section down and the motor cover removed. Severe damage to the bed can occur.

CAUTION:
Ensure the roller bearings do not get degreased during the cleaning process. Degreasing the roller bearings could cause the hilow drive screw to lock up.

CAUTION:
Do not use solutions such as turpentine, paint or lacquer thinner, etc. This will deteriorate the caster life and performance.

CAUTION:
To prevent tripping, bend in the cane bumper to be in the upward position. Failure to do so could result in personal injury or equipment damage.

SHOCK HAZARD:
Unplug the unit from its power source. Failure to do so could result in personal injury or equipment damage.

SHOCK HAZARD:
Unplug the unit from its power source before inserting the IV rod for manual operation. Failure to do so could result in personal injury or equipment damage.

SHOCK HAZARD:
Prior to removing the Trendelenburg box, ensure the bed is completely out of the Trendelenburg position. Failure to do so could result in personal injury or equipment damage.

SHOCK HAZARD:
Remove the IV rod before plugging the bed into its power source. Failure to do so could result in personal injury or equipment damage.

Before Operating

Before operating the Retractable bed, be sure that you have read and understand in detail the contents of this manual. It is important that you read and strictly adhere to the aspects of safety. Any reference to a side of the bed is from the patient's view lying in the bed on his or her back.

Safety

At any time, it is not prudent and unnecessary for personnel to have their entire body below the sleep surface and within the confines of the bed. Unplug the bed from its power source prior to cleaning or servicing it. If service personnel need to get under the bed, they must block up the hilow portion as an added precaution.

We urge you to incorporate these safety tips into your procedures for the safety of both patients and staff.

Bed Position

To reduce the number and severity of patient falls, always leave the bed in the low position when the patient is unattended.

Siderails/Restraints/Patient Monitoring

Leave the siderails fully up and locked when the patient is left unattended. When raising the siderails, be sure that you hear the click that signals the up and locked condition. Give the siderails a tug to check that they are firmly in position.

Hill-Rom recognizes that certain health care situations can indicate the need for specialized siderail configuration. Hill-Rom offers different siderail accessories for these needs. See the section "Accessories" on page 7-4.

Siderails are intended as a reminder, not a patient restraint device. Hill-Rom recommends the appropriate medical personnel determine the level of restraint necessary to ensure a patient will remain safely in bed. Consult the restraint manufacturer's instructions for use to verify the correct application of each restraining device.

When "high profile" patients (frail, elderly, medicated, confused, etc.) are involved, Hill-Rom recommends the following minimum actions be taken:

1. Develop guidelines for all high profile patients and indicate:
   - Which patients need to be restrained and the appropriate restraint to utilize
   - The proper method to monitor the patient, restrained or not, including time interval, visual check of restraint, etc.
2. Develop training programs for all caregivers concerning the proper use and application of restraints.
3. Maintain the bed at its lowest position when caregivers are not in the patient's room.

Brake and Steer

Always keep the casters in the brake position when the bed is occupied. Patients use the bed for support when getting in or out of the bed, and serious injuries can result if the bed moves. After the brakes are set, rock the bed gently to ensure that they are locked. Put the casters in the steer mode when moving the bed. This will make the bed much easier to move.

Fluids

When massive spills occur in the area of the circuit board and motors, immediately:

1. Unplug the bed from its power source.
2. Take care of the patient.
3. Clean the fluid from the bed.
4. Have maintenance check out the bed completely. Fluids can short out controls, making the bed inoperable or cause the bed to operate erratically. Component failure caused by fluids can even cause the bed to operate without warning, causing injury.
5. Do not place the bed back into service until the unit is unquestionably dry and tested safe to operate.

Water Mattress

The excessive weight associated with water mattresses puts an undo stress on the motor drives. In most cases, the patient's weight plus the water mattress weight exceeds the recommended bed capacity. Even more important is the

fact that water mattresses are subject to rupture, which would allow large amounts of water to come into contact with the electrical components of the bed. We feel the possibility of rupture to be a serious problem for which the hospital would not want to be responsible.

Lockout Switches

Whenever a patient or visitor should be restricted from operating the siderail controls, activate the appropriate lockout switch at the attendant control console located at the foot end of the bed. The lockout switches are for the convenience of the staff and the safety of the patient. Use them when appropriate.

CPR Release

Only healthcare professionals should use the emergency CPR release. The release handle is located under the head section of the bed, near the head end.

To activate the CPR release, press the red button, and pull the CPR release handle. Continue to pull out on the handle until the head section is flat. Then, release the CPR release handle.

Warning and Caution Labels

Figure 1-11. Warning and Caution Labels

CAUTION
ELECTRIC SHOCK HAZARD
DO NOT REMOVE COVER
REFER SERVICING TO
QUALIFIED SERVICE PERSONNEL

WARNING: POWERED BED MECHANSIMS CAN CAUSE SERIOUS INJURY. OPERATE BED ONLY WITH PERSONS CLEAR OF MECHANISMS
CAUTION: UNPLUG BED DURING SERVICE OR CLEANING. REFER TO SERVICE MANUAL AND IN-SERVICE MANUAL FOR ADDITIONAL PRECAUTIONS

CAUTION
ELECTRICAL SHOCK HAZARD. THESE MOTORS NOT GROUNDED

CAUTION
HANG SWITCH IN HOLDER WHEN NOT IN USE. KEEP CORD CLEAR OF MOVING PARTS.
Hill-Rom P729
Batesville, IN 47006

CAUTION: WHEN USING HALF BED-LENGTH TENT TYPE OXYGEN EQUIPMENT, INSURE THAT SIDE-RAILS ARE OUTSIDE THE TENT.

CAUTION: EXTERNAL CIRCUITS PROVIDED BY HOSPITAL FACILITIES AND INTERFACING WITH SIDECOM, HAVE NOT BEEN INVESTIGATED BY UL. PERIODIC TESTS OF LEAKAGE CURRENT SHOULD BE PERFORMED ON THESE CIRCUITS TO VERIFY VALUES ARE WITHIN SAFE AND ACCEPTABLE LIMITS FOR LOCATION OF USE.

ATTENTION
WHEN SERVICING USE ONLY
IDENTICAL REPLACEMENT PARTS

CAUTION: **UNSTABLE ELECTRICAL GROUND MAY EXIST. GROUNDING RELIABLITY CAN ONLY BE ACHIEVED WHEN THIS BED IS CONNECTED TO AN EQUIVALENT RECEPTACLE MARKED "HOSPITAL GRADE"**

DAMAGE MAY OCCUR TO SPEAKER AND / OR POTENTIOMETER IF ENTERTAINMENT OR NURSE-PATIENT AUDIO EXCEEDS 5.5 VRMS

CAUTION - **POSSIBLE FIRE HAZARD. THIS BED IS SUITABLE FOR USE WITH OXYGEN EQUIPMENT OF THE NASAL, MASK, VENTILATOR, OR HALF BED-LENGTH TENT TYPE. OXYGEN TENT SHOULD NOT EXTEND BELOW MATTRESS SUPPORT LEVEL.**

m038b031

NOTES:

Chapter 2
Troubleshooting Procedures

2

Chapter Contents

Getting Started . . . . . 2 - 3
Operational Problems . . . . . 2 - 4
Test Equipment . . . . . 2 - 4
Electrical Functions . . . . . 2 - 5
Troubleshooting Requirements . . . . . 2 - 6
Initial Actions . . . . . 2 - 7
Function Checks . . . . . 2 - 8
Final Actions . . . . . 2 - 10
Head Up Switch Failure . . . . . 2 - 11
Head Down Switch Failure . . . . . 2 - 13
Knee Up Switch Failure . . . . . 2 - 15
Knee Down Switch Failure . . . . . 2 - 17
Hilow Up Switch Failure . . . . . 2 - 19
Hilow Down Switch Failure . . . . . 2 - 21
Knee Section Fails To Raise . . . . . 2 - 24
Knee Section Fails To Lower . . . . . 2 - 27
Trendelenburg Failure . . . . . 2 - 29
Reverse Trendelenburg Failure—P8400 Models . . . . . 2 - 31
Reverse Trendelenburg Failure—P8500 Models . . . . . 2 - 34
Trendelenburg Out Control Switch Failure . . . . . 2 - 37
Reverse Trendelenburg Out Control Switch Failure—P8400 Models . . . . . 2 - 39
Reverse Trendelenburg Out Control Switch Failure—P8500 Models . . . . . 2 - 41
Bed Air Surface Failure . . . . . 2 - 43

Night Light Failure . . . . . 2 - 48

2

Getting Started

Begin each procedure in this chapter with step 1. Follow the sequence outlined (each step assumes the previous steps are correct). Each step is the normal operational event of the product and can be confirmed by answering Y (yes) or N (no) to the statement. Your response will lead to another step in the procedure, a repair analysis procedure (RAP), or a component replacement. If more than one component is listed, replace them in the order given.

Start with **Initial Actions** to begin gathering information about the problem.

Perform the **Function Checks** to isolate or identify a problem and to verify repair after completing each corrective action (replacing or adjusting a part, seating a connector, etc.).

If troubleshooting procedures do not isolate the problem, call Hill-Rom Technical Support at (800) 445-3720 for assistance.

WARNING:
Only qualified service personnel should do troubleshooting on the Retractable bed. Before beginning any troubleshooting on the Retractable bed, be sure that you have read and understand the information in the troubleshooting section. Troubleshooting by unauthorized personnel could result in personal injury or equipment damage.

These troubleshooting techniques will help you locate operational problems on the Retractable bed. This section includes a list of functions and the technical information required to inspect and diagnose problems. Wiring diagrams for all of the boards in the Retractable bed are located in chapter 3.

2

Operational Problems

Frequently, apparent operational problems are the result of normal bed operation. Perform a quick inspection for the following conditions before you continue troubleshooting the bed.

- Is the bed plugged into an appropriate power source?
- Is the BED MOTOR POWER SWITCH, located in the attendant control console at the foot end of the bed, turned off? The MOTOR POWER OFF LED will be lit if this is the case.
- Are any lockouts that affect the desired function activated in the attendant control console?
- Is the desired function at its low or high limit?
- Does the function work at another place on the bed? For example, one or both siderails or the attendant control console? (This can help isolate the problem to a specific area on the bed.)

Test Equipment

You will need a digital or analog multimeter (VOM) with fine tip probes to troubleshoot the Retractable bed. The following section describes the three basic electrical functions that you will be testing with the VOM.

WARNING:
Refer to your VOM owners manual for complete and detailed information regarding the operation of your VOM.

2

Figure 2-1. VOM

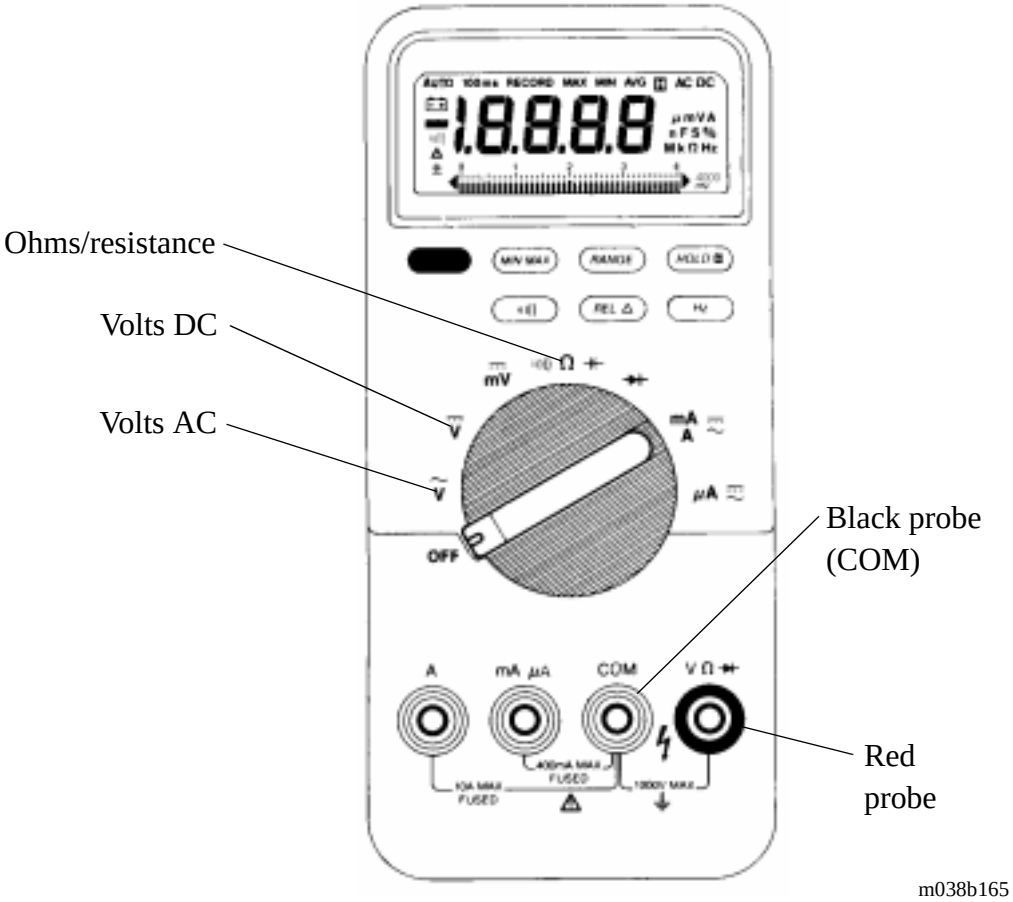

Electrical Functions

Figure 2-1 on page 2-5 represents a common digital VOM. The three basic electrical functions that require testing are alternating current (AC), direct current (DC), and ohms/resistance.

Figure 2-1 on page 2-5 displays the correct connection for the fine tip probes. The red probe plugs into the port marked “V Ω”. The black probe plugs into the port marked “COM”. The troubleshooting flow charts indicate the placement of the red and black probes.

WARNING:
Unplug the bed from its power source before checking ohms/resistance measurements. Failure to disconnect line voltage to the bed can damage the VOM.

Troubleshooting Requirements

Check the measurements in this section before going to the repair analysis procedure (RAP). Use the testport cable (J/P 200) provided on the Retractable bed to begin troubleshooting. Use the “Bed Control Cable Assembly Wiring Diagram—P/N 45896” on page 3-3 for additional information.

NOTE:
The testport cable is only found on beds equipped with “communication” or “upgradeable” siderail configurations. Beds equipped with “non-upgradeable” siderails **do not** have testport cables and cannot be tested in this fashion.

When troubleshooting the Retractable bed, use the following common grounds:

- At J/P 200, use pin 21 (black probe).
- At J/P 2, use pin 4 (black probe).

Perform the following tests before going to the repair analysis procedure (RAP). If your voltage measurements do not match the values listed, the problem may be your control board assembly.

- Check VCC
  Set your VOM to measure volts DC. Measure between J/P 200 pins 5 (red probe) and 21 (black probe). It should measure +12V DC.
- Check V+
  Set your VOM to measure volts DC. Measure between J/P 200 pins 13 (red probe) and 21 (black probe). It should measure +12V DC.

If the voltage measurements match the values listed above, go to the appropriate repair analysis procedure (RAP). Follow the yes/no steps to locate the operational problem.

Initial Actions

Use Initial Actions to gather information from operators concerning problems with the bed. Make note of symptoms or other information concerning the problem that the operator identifies. This information helps identify the probable cause.

1. Someone who can explain the problem is available.

   Yes ↓ **No** → Go to “Function Checks” on page 2-8.

2. Ask that person to demonstrate or explain the problem. The problem can be duplicated.

   Yes ↓ **No** → Go to “Function Checks” on page 2-8.

3. The problem is result of improper operator action.

   Yes ↓ **No** → Go to “Function Checks” on page 2-8.

4. Instruct the operators to refer the procedures in the *Retractable Bed In-Service Manua*l. Perform the “Function Checks” on page 2-8 to ensure proper operation of the Retractable Bed.

2

Function Checks

1. Initial Actions have been performed.

   Yes ↓ **No** → Go to “Initial Actions” on page 2-7.

2. Press the head up switch, and activate the head section. The head section raises when the head up switch is activated.

   Yes ↓ **No** → Go to RAP 2.1.

3. Press the head down switch, and activate the head section. The head section lowers when the head down switch is activated.

   Yes ↓ **No** → Go to RAP 2.2.

4. Press the knee up switch, and activate the knee section. The knee section raises when the knee up switch is activated.

   Yes ↓ **No** → Go to RAP 2.3.

5. Press the knee down switch, and activate the knee section. The knee section lowers when the knee down switch is activated.

   Yes ↓ **No** → Go to RAP 2.4.

6. Press the hilow up switch, and activate the bed. The bed raises when the hilow up switch is activated.

   Yes ↓ **No** → Go to RAP 2.5.

7. Press the hilow down switch, and activate the bed. The bed lowers when the hilow down switch is activated.

   Yes ↓ **No** → Go to RAP 2.6.

8. Press the head up switch, and activate the bed. The knee section raises when the head up switch is activated.

   Yes ↓ **No** → Go to RAP 2.7.

9. Press the head down switch, and activate the bed. The knee section lowers when the head down switch is activated.

Yes **No**
↓ → Go to RAP 2.8.

10. Engage the Trendelenburg switch, and activate the bed. The bed goes into the Trendelenburg position.

    Yes **No**
    ↓ → Go to RAP 2.9.

11. Engage the Reverse Trendelenburg switch, and activate the bed (P8400 models). The bed goes into the Reverse Trendelenburg position.

    Yes **No**
    ↓ → Go to RAP 2.10.

12. Engage the Reverse Trendelenburg switch, and activate the bed (P8500 models). The bed goes into the Reverse Trendelenburg position.

    Yes **No**
    ↓ → Go to RAP 2.11.

13. Engage the Trendelenburg out control switch, and activate the bed. The bed automatically comes out of the Trendelenburg position.

    Yes **No**
    ↓ → Go to RAP 2.12.

14. Engage the Reverse Trendelenburg out control switch, and activate the bed (P8400 models). The bed automatically comes out of the Reverse Trendelenburg position.

    Yes **No**
    ↓ → Go to RAP 2.13.

15. Engage the Reverse Trendelenburg out control switch, and activate the bed (P8500 models). The bed automatically comes out of the Reverse Trendelenburg position.

    Yes **No**
    ↓ → Go to RAP 2.14.

16. Press the firm switch, and activate bed air surface. The mattress inflates.

    Yes **No**
    ↓ → Go to RAP 2.15.

17. Press the night light switch to the “on” position. The night light comes on.

    Yes **No**
    ↓ → Go to RAP 2.16.

Final Actions

2

1. Complete the required preventive maintenance procedures. See “Preventive Maintenance” on page 6-5.
2. Ensure all wires and components are in place and secure.
3. Complete all required administration tasks.

2.1 Head Up Switch Failure

The head section will not raise when the head up switch is activated.

1. Set your VOM to measure V DC. At J/P200, place your black probe into pin 21 and your red probe into pin 9. Activate the head up switch. The voltage is approximately 12V DC.

   Yes ↓ **No** → Replace the head up switch or the cable (refer to procedure 4.32). If this solves the problem, go to "Final Actions" on page 2-10. Otherwise, continue to step 2.

2. Set your VOM to measure V DC. At J/P 3, place your black probe into pin 2 and your red probe into pin 8. Activate the head up switch. The voltage is approximately 12V DC.

   Yes ↓ **No** → Replace the cable (A) between J/P 200 and the control board (B) (see figure 2-2 on page 2-11) (refer to procedure 4.3) P8400 models or (refer to procedure 4.4) P8500 models. If this solves the problem, go to "Final Actions" on page 2-10. Otherwise, continue to step 3.

Figure 2-2. Testport Cable Location

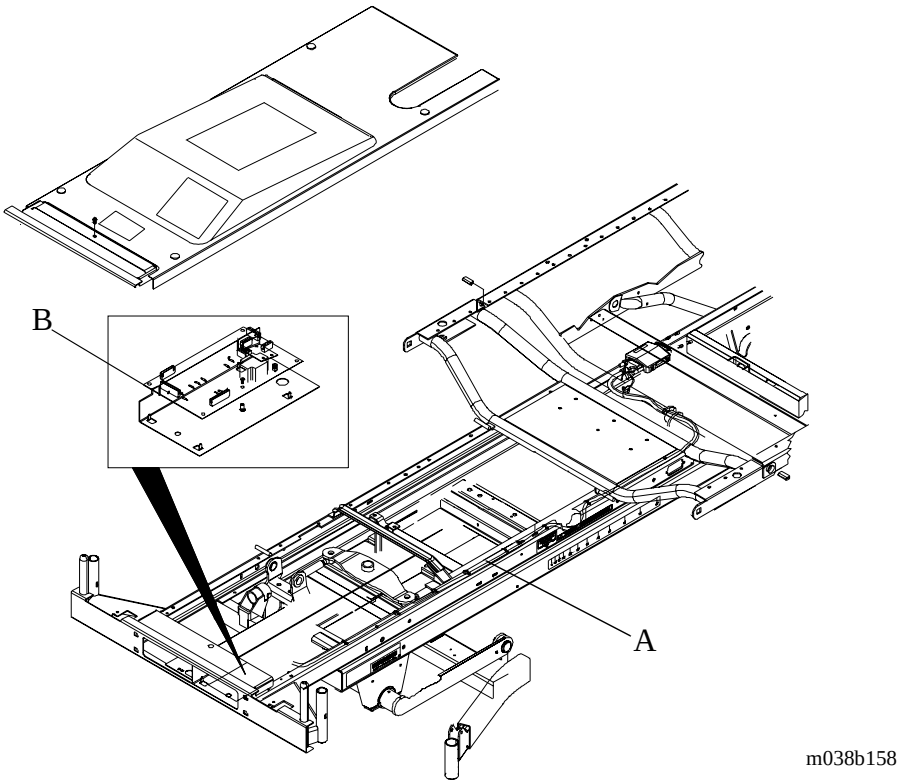

2

3. Set your VOM to measure V DC. At J/P 3, place your black probe into pin 2 and your red probe into pin 17. The voltage is approximately 12V DC.

   Yes ↓ **No** → Replace the limit switch or the cable to the limit switch (refer to procedure 4.11). If this solves the problem, go to "Final Actions" on page 2-10. Otherwise, continue to step 4.

4. Set your VOM to measure V DC. At J/P 2, place your black probe into pin 4 and your red probe into pin 7. Activate the head up switch. The voltage is approximately 12V DC.

   Yes ↓ **No** → Replace the lockout switch or the cable to the lockout switch (refer to procedure 4.30). If this solves the problem, go to "Final Actions" on page 2-10. Otherwise, continue to step 5.

5. Set your VOM to measure V AC. At J/P 7, place your black probe into pin 2 and your red probe into pin 1. Activate the head up switch. The voltage is between 100-130V AC.

   Yes ↓ **No** → Replace the control board (refer to procedure 4.3) P8400 models or (refer to procedure 4.4) P8500 models. If this solves the problem, go to "Final Actions" on page 2-10. Otherwise, continue to step 6.

6. Set your VOM to measure V AC. At J/P1, place your black probe into pin 3 and your red probe into pin 2. Activate the head up switch. The voltage is between 100-130V AC.

   Yes ↓ **No** → Replace the cable between the control board and J/P 1 (refer to procedure 4.3) P8400 models or (refer to procedure 4.4) P8500 models. If this solves the problem, go to "Final Actions" on page 2-10. Otherwise, continue to step 7.

7. Replace the head motor (refer to procedure 4.9).

   This solves the problem.

   Yes ↓ **No** → Call Hill-Rom Technical Support at (800) 445-3720.

8. Go to "Final Actions" on page 2-10.

2.2 Head Down Switch Failure

The head section will not lower when the head down switch is activated.

1. Set your VOM to measure V DC. At J/P 200 place your black probe into pin 21 and your red probe into pin 8. Activate the head down switch. The voltage is approximately 12V DC.

   Yes ↓ **No** → Replace the head down switch or the control cable (refer to procedure 4.32). If this solves the problem, go to "Final Actions" on page 2-10. Otherwise, continue to step 2.

2. Set your VOM to measure V DC At J/P 3, place your black probe into pin 2 and your red probe into pin 7. Activate the head down switch. The voltage is approximately 12V DC.

   Yes ↓ **No** → Replace the cable between J/P 200 and the control board (refer to procedure 4.3) P8400 models or (refer to procedure 4.4) P8500 models. If this solves the problem, go to "Final Actions" on page 2-10. Otherwise, continue to step 3.

3. Set your VOM to measure V DC. At J/P 3, place your black probe into pin 2 and your red probe into pin 18. The voltage is approximately 12V DC.

   Yes ↓ **No** → Replace the limit switch or the cable to the limit switch (refer to procedure 4.11). If this solves the problem, go to "Final Actions" on page 2-10. Otherwise, continue to step 4.

4. Set your VOM to measure V DC. At J/P 2, place your black probe into pin 4 and your red probe into pin 7. Activate the head down switch. The voltage is approximately 12V DC.

   Yes ↓ **No** → Replace the lockout switch or the cable to the lockout switch (refer to procedure 4.30). If this solves the problem, go to "Final Actions" on page 2-10. Otherwise, continue to step 5.

5. Set your VOM to measure V AC. At J/P 7, place your black probe into pin 2 and your red probe into pin 4. Activate the head down switch. The voltage is between 100-130V AC.

   Yes ↓ **No** → Replace the control board (refer to procedure 4.3) P8400 models or (refer to procedure 4.4) P8500 models. If this solves the

2

problem, go to “Final Actions” on page 2-10. Otherwise, continue to step 6.

6. Set your VOM to measure V AC. At J/P 11, place your black probe into pin 3 and your red probe into pin 1. Activate the head down switch. The voltage is between 100-130V AC.

   Yes ↓ **No** → Replace the cable between the control board and J/P 11 (refer to procedure 4.3) P8400 models or (refer to procedure 4.4) P8500 models. If this solves the problem, go to “Final Actions” on page 2-10. Otherwise, continue to step 7.

7. Replace the head motor (A) (see figure 2-3 on page 2-14) (refer to procedure 4.9).

Figure 2-3. Head Motor Location

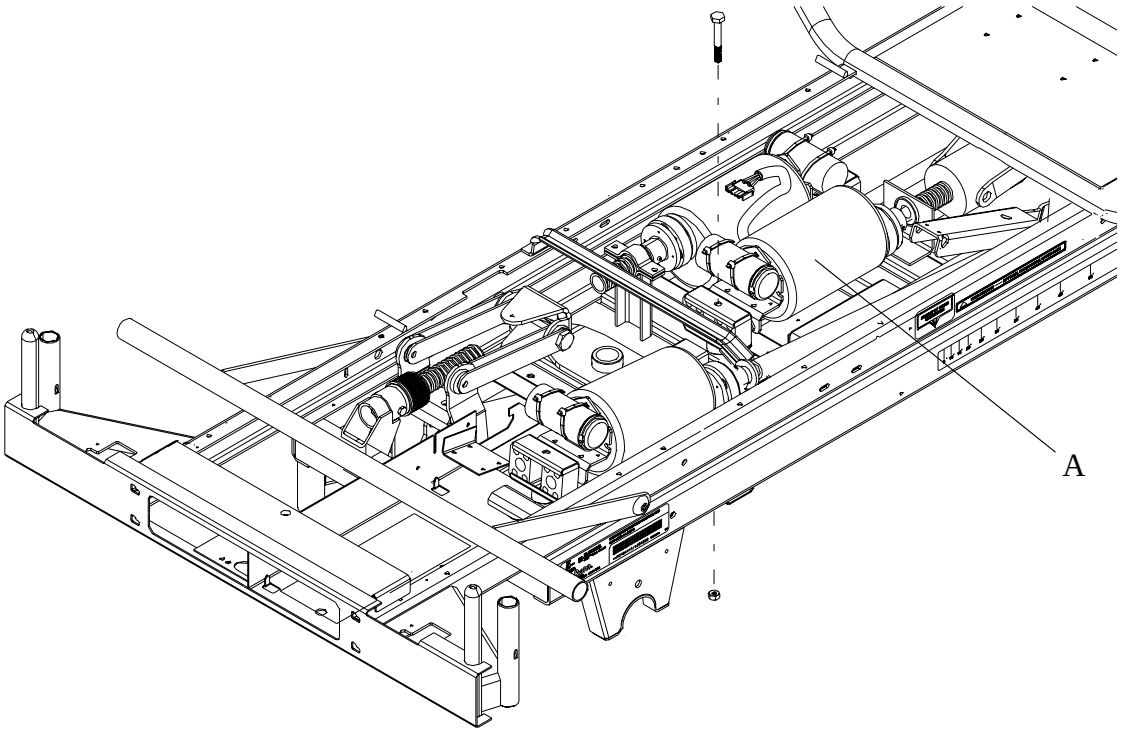

This solves the problem.

Yes ↓ **No** → Call Hill-Rom Technical Support at (800) 445-3720.

8. Go to “Final Actions” on page 2-10.

2.3 Knee Up Switch Failure

The knee section (A) will not raise when the knee up switch is activated (see figure 2-4 on page 2-15).

Figure 2-4. Knee Section

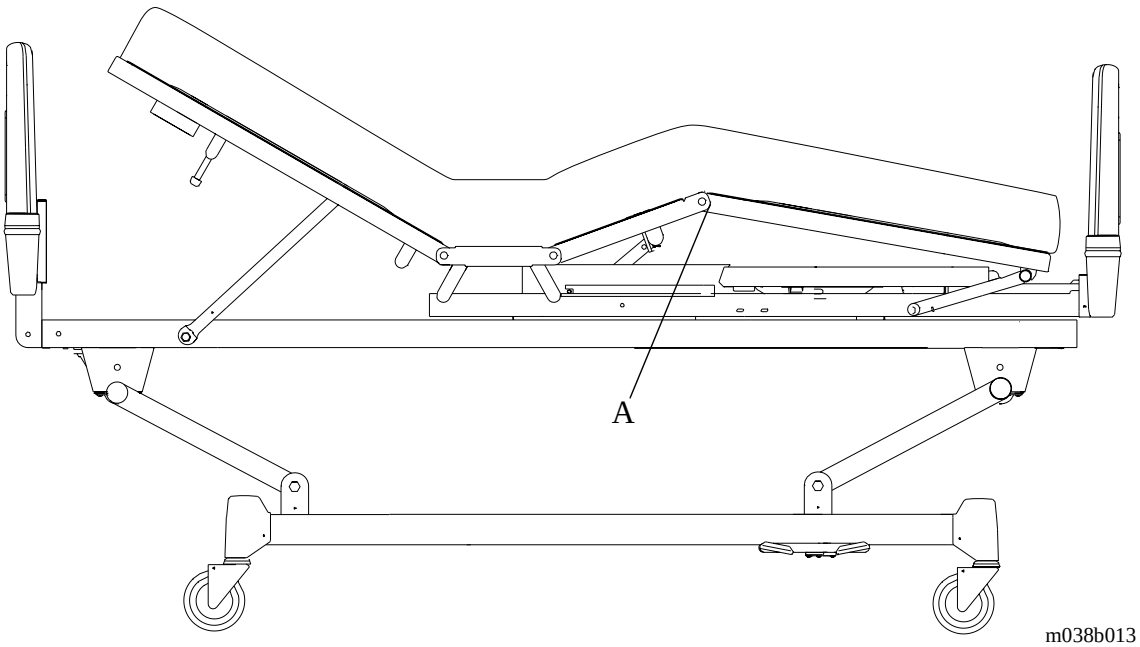

1. Set your VOM to measure V DC. At J/P 200, place your black probe into pin 21 and your red probe into pin 7. Activate the knee up switch. The voltage is approximately 12V DC.

   Yes ↓ **No** → Replace the knee up switch or the cable to the switch (refer to procedure 4.32). If this solves the problem, go to "Final Actions" on page 2-10. Otherwise, continue to step 2.

2. Set your VOM to measure V DC. At J/P 3, place your black probe into pin 2 and your red probe into pin 9. Activate the knee up switch. The voltage is approximately 12V DC.

   Yes ↓ **No** → Replace the cable between J/P 200 and the control board (refer to procedure 4.3) P8400 models or (refer to procedure 4.4) P8500 models. If this solves the problem, go to "Final Actions" on page 2-10. Otherwise, continue to step 3.

2

3. Set your VOM to measure V DC. At J/P 3, place your black probe into pin 2 and your red probe into pin 21. The voltage is approximately 12V DC.

   Yes ↓ **No** → Replace the limit switch or the cable to the limit switch (refer to procedure 4.16). If this solves the problem, go to "Final Actions" on page 2-10. Otherwise, continue to step 4.

4. Set your VOM to measure V DC. At J/P 3, place your black probe into pin 22 and your red probe into pin 21. Activate the knee up switch. The voltage is approximately 12V DC.

   Yes ↓ **No** → Replace the lockout switch or the cable to the lockout switch (refer to procedure 4.30). If this solves the problem, go to "Final Actions" on page 2-10. Otherwise, continue to step 5.

5. Set your VOM to measure V AC. At J/P 6, place your black probe into pin 3 and your red probe into pin 1. Activate the knee up switch. The voltage is between 100-130V AC.

   Yes ↓ **No** → Replace the control board (refer to procedure 4.3) P8400 models or (refer to procedure 4.4) P8500 models. If this solves the problem, go to "Final Actions" on page 2-10. Otherwise, continue to step 6.

6. Replace the knee motor (refer to procedure 4.14).

   This solves the problem.

   Yes ↓ **No** → Call Hill-Rom Technical Support at (800) 445-3720.

7. Go to "Final Actions" on page 2-10.

2.4 Knee Down Switch Failure

The knee section will not lower when the knee down switch is activated.

1. Set your VOM to measure V DC. At J/P 200, place your black probe into pin 21 and your red probe into pin 6. Activate the knee down switch. The voltage is approximately 12V DC.

   Yes ↓ **No** → Replace the knee down switch or the cable to the switch (refer to procedure 4.32). If this solves the problem, go to "Final Actions" on page 2-10. Otherwise, continue to step 2.

2. Set your VOM to measure V DC. At J/P 3, place your black probe into pin 2 and red probe into pin 19. The voltage is approximately 12V DC.

   Yes ↓ **No** → Replace the cable between J/P 200 and the control board (refer to procedure 4.3) P8400 models or (refer to procedure 4.4) P8500 models. If this solves the problem, go to "Final Actions" on page 2-10. Otherwise, continue to step 3.

3. Set your VOM to measure V DC. At J/P 2, place your black probe into pin 4 and your red probe into pin 19. Activate the knee down switch. The voltage is approximately 12V DC.

   Yes ↓ **No** → Replace the limit switch or the cable to the limit switch (refer to procedure 4.16). If this solves the problem, go to "Final Actions" on page 2-10. Otherwise, continue to step 4.

4. Set your VOM to measure V AC. At J/P 6, place your black probe into pin 3 and your red probe into pin 2. Activate the knee down switch. The voltage is approximately 12V DC.

   Yes ↓ **No** → Replace the lockout switch or the cable to the lockout switch (refer to procedure 4.30). If this solves the problem, go to "Final Actions" on page 2-10. Otherwise, continue to step 5.

5. Set your VOM to measure V AC. At J/P 6, place your black probe into pin 3 and your red probe into pin 2. Activate the knee down switch. The voltage between 100-130V AC.

   Yes ↓ **No** → Replace the control board (refer to procedure 4.3) P8400 models or (refer to procedure 4.4) P8500 models. If this solves the

2

problem, go to “Final Actions” on page 2-10. Otherwise, continue to step 6.

6. Replace the knee motor (A) (see figure 2-5 on page 2-18) (refer to procedure 4.14).

Figure 2-5. Knee Motor Location

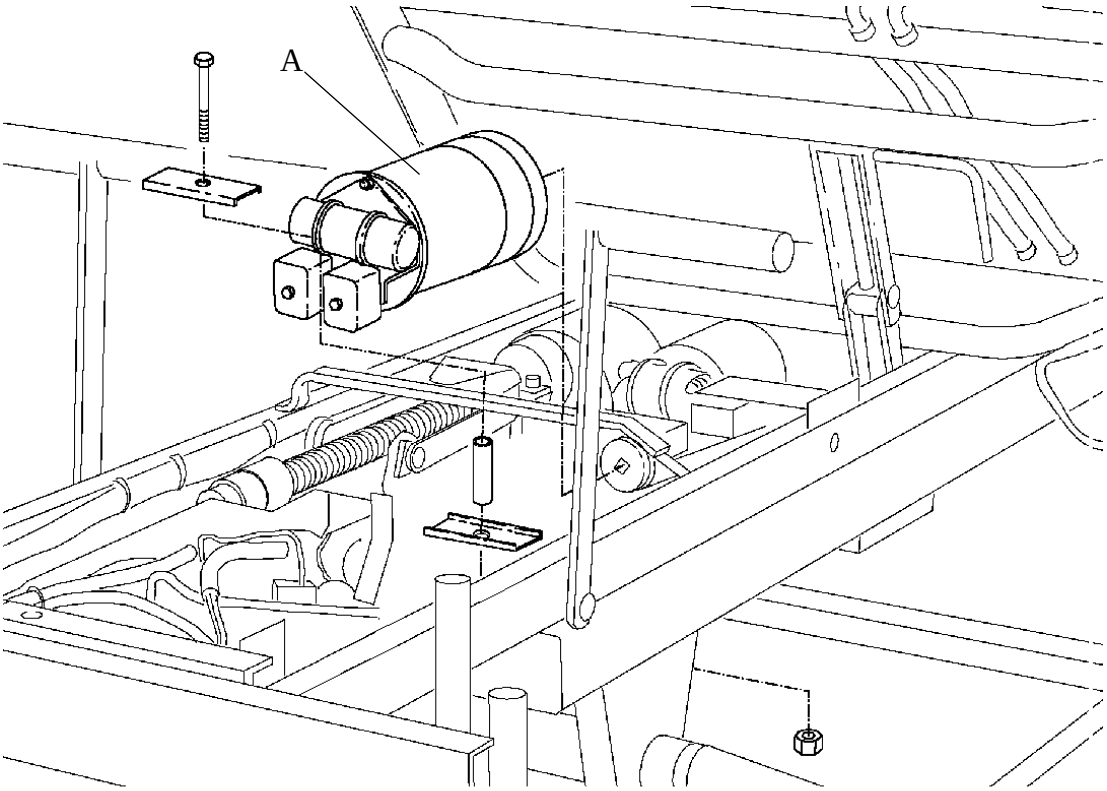

m038b108

This solves the problem.

Yes **No**
↓ → Call Hill-Rom Technical Support at (800) 445-3720.

7. Go to “Final Actions” on page 2-10.

2.5 Hilow Up Switch Failure

The bed will not raise when the hilow up switch is activated (see figure 2-6 on page 2-19).

Figure 2-6. Hilow Position

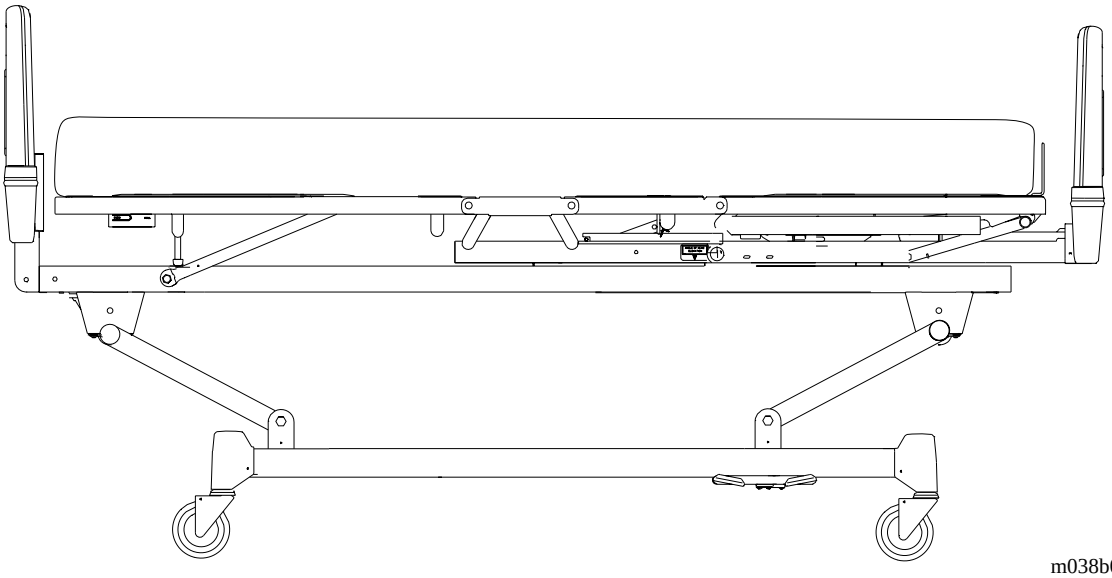

m038b014

1. Set your VOM to measure V DC. At J/P 200, place your black probe into pin 21 and your red probe into pin 11. Activate the hilow up switch. The voltage is approximately 12V DC.

   Yes ↓ **No** → Replace the hilow up switch or the cable (refer to procedure 4.32). If this solves the problem, go to “Final Actions” on page 2-10. Otherwise, continue to step 2.

2. Set your VOM to measure V DC. Place your black probe into J/P 3 pin 2 and your red probe into pin 12. Activate the hilow up switch. The voltage is approximately 12V DC.

   Yes ↓ **No** → Replace the cable between J/P 200 and the control board (refer to procedure 4.3) P8400 models or (refer to procedure 4.4) P8500 models. If this solves the problem, go to “Final Actions” on page 2-10. Otherwise, continue to step 3.

3. Set your VOM to measure V DC. At J/P 2, place your black probe into pin 4 and your red probe into J/P 4 pin 4. The voltage is approximately 12V DC.

2

Yes **No**
↓ → Replace the limit switch or the cable to the limit switch (refer to procedure 4.19 for P8400 models) or (refer to procedure 4.20 for P8500 models). If this solves the problem, go to “Final Actions” on page 2-10. Otherwise, continue to step 4.

4. Set your VOM to measure V AC. At J/P 2, place your black probe into pin 2 and your red probe into pin 12. Activate the hilow up switch. The voltage is approximately 12V DC.

   Yes **No**
   ↓ → Replace the lockout switch or the cable to the lockout switch (refer to procedure 4.30). If this solves the problem, go to “Final Actions” on page 2-10. Otherwise, continue to step 5.

5. Set your VOM to measure V AC. At J/P 7, place your black probe into pin 2 and your red probe into pin 3. Activate the hilow up switch. The voltage is between 100-130V AC.

   Yes **No**
   ↓ → Replace the control board (refer to procedure 4.3) P8400 models or (refer to procedure 4.4) P8500 models. If this solves the problem, go to “Final Actions” on page 2-10. Otherwise, continue to step 6.

6. Set your VOM to measure V AC. At J/P 11, place your black robe into pin 3 and your red probe into pin 1. Activate the hilow up switch. The voltage is between 100-130V AC.

   Yes **No**
   ↓ → Replace the cable between the control board and J/P 11 (refer to procedure 4.3) P8400 models or (refer to procedure 4.4) P8500 models. If this solves the problem, go to “Final Actions” on page 2-10. Otherwise, continue to step 7.

7. Replace the hilow motor (refer to procedure 4.17).

   This solves the problem.

   Yes **No**
   ↓ → Call Hill-Rom Technical Support at (800) 445-3720.

8. Go to “Final Actions” on page 2-10.

2.6 Hilow Down Switch Failure

The bed will not lower when the hilow down switch is activated.

1. Set your VOM to measure V DC. At J/P 200, place your black probe into pin 21 and your red probe into pin 10. Activate the hilow down switch. The voltage is approximately 12V DC.

   Yes ↓ **No** → Replace the hilow down switch or the cable (refer to procedure 4.32). If this solves the problem, go to "Final Actions" on page 2-10. Otherwise, continue to step 2.

2. Set your VOM to measure V DC. At J/P 3, place your black probe into pin 2 and your red probe into pin 11. Activate the hilow down switch. The voltage is approximately 12V DC.

   Yes ↓ **No** → Replace the cable between J/P 200 and the control board (refer to procedure 4.3) P8400 models or (refer to procedure 4.4) P8500 models. If this solves the problem, go to "Final Actions" on page 2-10. Otherwise, continue to step 3.

3. Set your VOM to measure V DC. Place your black probe into J/P 2 pin 4 and your red probe into J/P 4 pin 3. The voltage is approximately 12V DC.

   Yes ↓ **No** → Replace the limit switch or the cable to the limit switch (refer to procedure 4.19 for P8400 models) or (refer to procedure 4.20 for P8500 models). If this solves the problem, go to "Final Actions" on page 2-10. Otherwise, continue to step 4.

4. Set your VOM to measure V AC. At J/P 2, place your black probe into pin 4 and your red probe into pin 10. Activate the hilow down switch. The voltage is approximately 12V DC.

   Yes ↓ **No** → Replace the lockout switch or the cable to the lockout switch (refer to procedure 4.30). If this solves the problem, go to "Final Actions" on page 2-10. Otherwise, continue to step 5.

5. Set your VOM to measure V AC. At J/P 7, place your black probe into pin 2 and your red probe into pin 6. Activate the hilow down switch. The voltage is between 100-130V AC.

   Yes ↓ **No** → Replace the control board (refer to procedure 4.3) P8400 models or (refer to procedure 4.4) P8500 models. If this solves the

2

problem, go to “Final Actions” on page 2-10. Otherwise, continue to step 6.

6. Set your VOM to measure V AC. At J/P 11, place your black probe into pin 3 and your red probe into pin 2. Activate the hilow down switch. The voltage is between 100-130V AC.

   Yes ↓ **No** → Replace the cable between the control board and J/P 11 (refer to procedure 4.3) P8400 models or (refer to procedure 4.4) P8500 models. If this solves the problem, go to “Final Actions” on page 2-10. Otherwise, continue to step 7.

7. Replace the hilow motor (A) (see figure 2-7 on page 2-22) (refer to procedure 4.17).

Figure 2-7. Hilow Motor Location

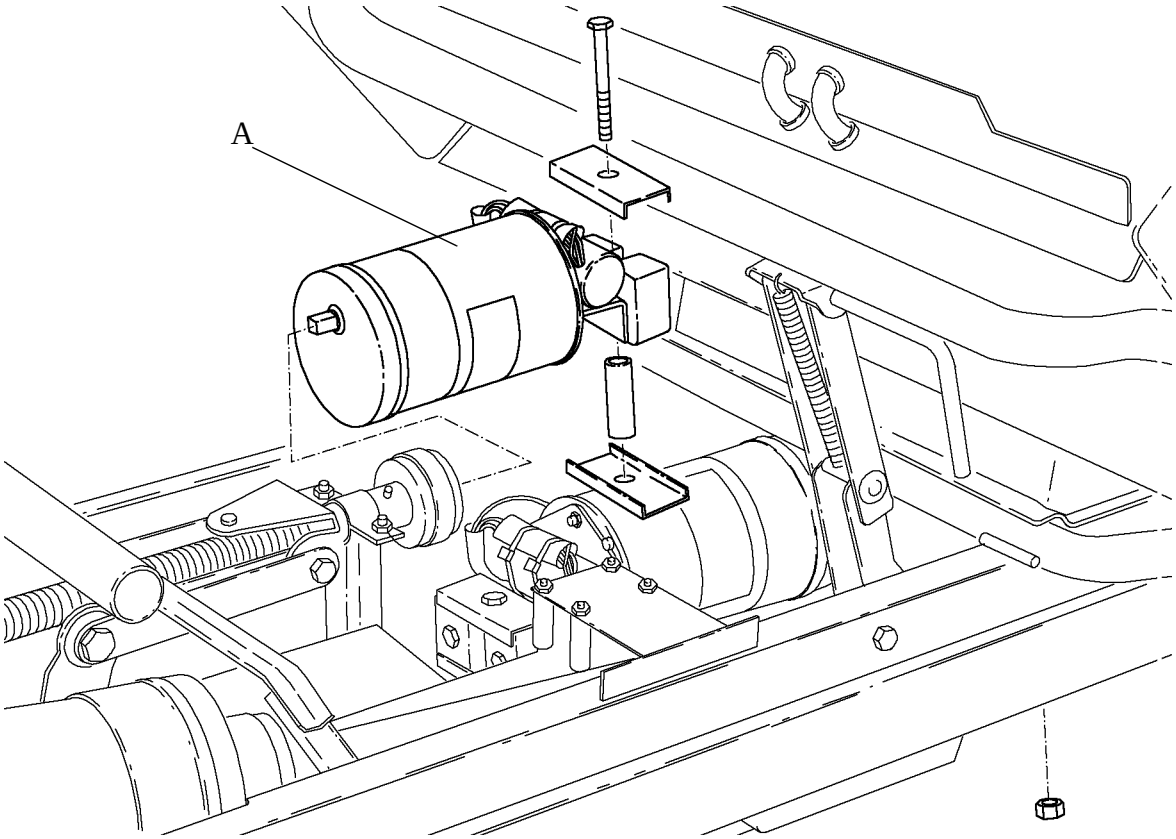

m038b116

This solves the problem.

Yes	No
↓	→ Call Hill-Rom Technical Support at (800) 445-3720.

8. Go to “Final Actions” on page 2-10.

2.7 Knee Section Fails To Raise

The knee section will not raise when the head up switch is activated.

1. Set your VOM to measure V DC. At J/P 3, place your black probe into pin 2 and your red probe into pin 9. Activate the head up switch. The voltage is approximately 12V DC.

   Yes ↓ **No** → Replace the testport or the cable between the testport and the control board (refer to procedure 4.3) P8400 models or (refer to procedure 4.4) P8500 models. If this solves the problem, go to "Final Actions" on page 2-10. Otherwise, continue to step 2.

2. Set your VOM to measure V DC. At J/P 3, place your black probe into pin 6 and your red probe into pin 5. Activate the head up switch. The voltage is approximately 12V DC.

   Yes ↓ **No** → Replace the knee limit switch (A) (see figure 2-8 on page 2-25) or the cable to the limit switch (refer to procedure 4.16). If this solves the problem, go to "Final Actions" on page 2-10. Otherwise, continue to step 3.

Figure 2-8. Knee Limit Switch Location

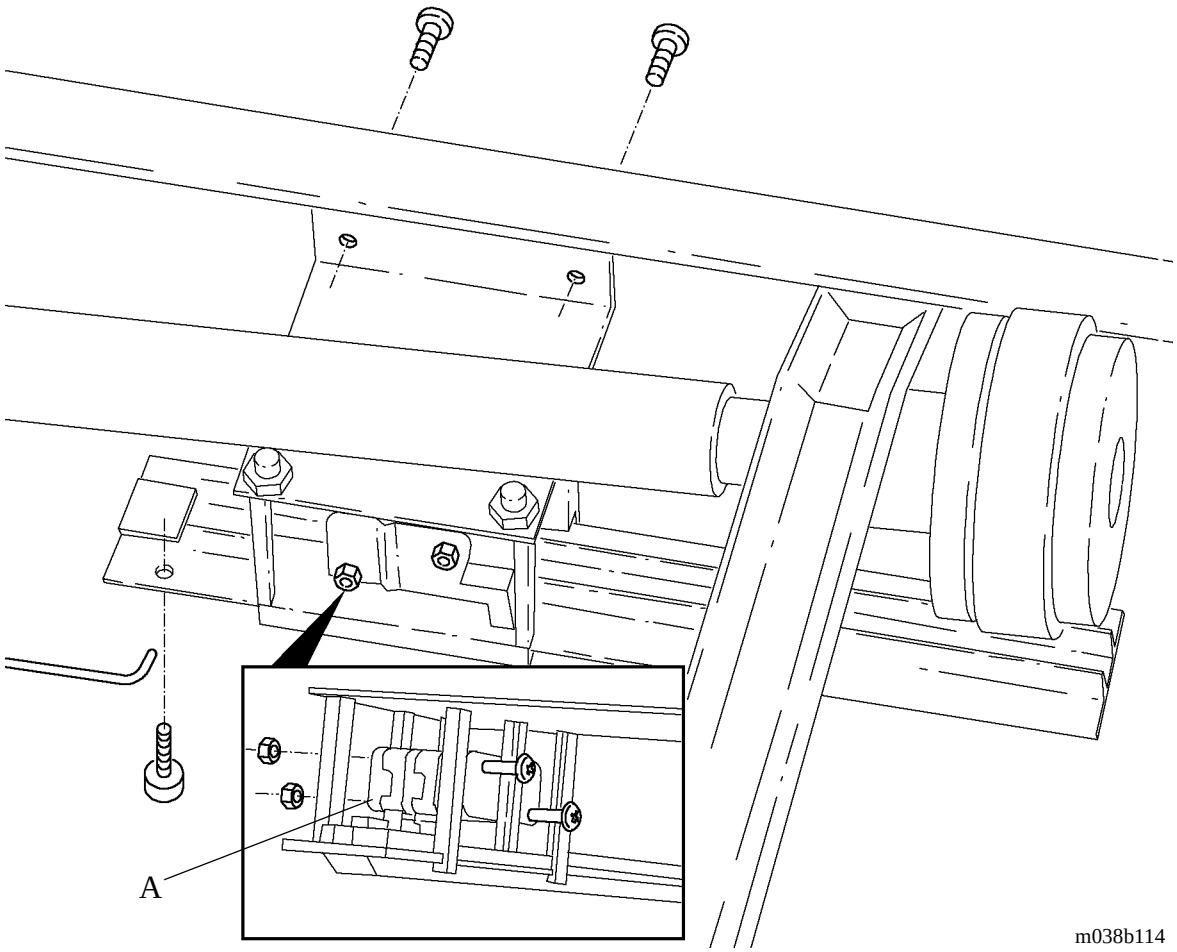

3. Set your VOM to measure V DC. At J/P 3, place your black probe into pin 6 and your red probe into pin 5. Activate the head up switch. The voltage is approximately 12V DC.

   Yes ↓ **No** → Replace the automatic contour up limit switch or the cable to the limit switch. If this solves the problem, go to "Final Actions" on page 2-10. Otherwise, continue to step 4.

4. Set your VOM to measure V DC. At J/P 2, place your black probe into pin 4 and your red probe into pin 8. Activate the head up switch. The voltage is approximately 12V DC.

   Yes ↓ **No** → Replace the lockout switch or the cable to the lockout switch (refer to procedure 4.30). If this solves the problem, go to "Final Actions" on page 2-10. Otherwise, continue to step 5.

2

5. Set your VOM to measure V AC. At J/P 6, place your black probe into pin 3 and your red probe into pin 1. Activate the head up switch. The voltage is between 100-130V AC.

   Yes ↓ **No** → Replace the control board (refer to procedure 4.3) P8400 models or (refer to procedure 4.4) P8500 models. If this solves the problem, go to "Final Actions" on page 2-10. Otherwise, continue to step 6.

6. Replace the knee motor (refer to procedure 4.14).

   This solves the problem.

   Yes ↓ **No** → Call Hill-Rom Technical Support at (800) 445-3720.

7. Go to "Final Actions" on page 2-10.

2.8 Knee Section Fails To Lower

The knee section will not lower when the head down switch is activated

1. Set your VOM to measure V DC. At J/P3, place your black probe into pin 2 and your red probe into pin 10. Activate the head down switch. The voltage is approximately 12V DC.

   Yes ↓ **No** → Replace the testport or the cable between the testport and the control board (refer to procedure 4.3) P8400 models or (refer to procedure 4.4) P8500 models. If this solves the problem, go to "Final Actions" on page 2-10. Otherwise, continue to step 2.

2. Set your VOM to measure V DC. At J/P 3, place your black probe into pin 4 and your red probe into pin 3. Activate the head down switch. The voltage is approximately 12V DC.

   Yes ↓ **No** → Replace the knee limit switch or the cable to the limit switch (refer to procedure 4.16). If this solves the problem, go to "Final Actions" on page 2-10. Otherwise, continue to step 3.

3. Set your VOM to measure V DC. At J/P 2, place your black probe into pin 4 and your red probe into pin 8. Activate the head down switch. The voltage is approximately 12V DC.

   Yes ↓ **No** → Replace the automatic contour down limit switch or the cable to the limit switch. If this solves the problem, go to "Final Actions" on page 2-10. Otherwise, continue to step 4.

4. Set your VOM to measure V DC. At J/P 2, place your black probe into pin 4 and your red probe into pin 8. Activate the head down switch. The voltage is approximately 12V DC.

   Yes ↓ **No** → Replace the lockout switch or the cable to the lockout switch (refer to procedure 4.30). If this solves the problem, go to "Final Actions" on page 2-10. Otherwise, continue to step 5.

5. Set your VOM to measure V AC. At J/P 6, place your black probe into pin 3 and your red probe into pin 2. Activate the head down switch. The voltage is between 100-130V AC.

   Yes ↓ **No** → Replace the control board (A) (see figure 2-9 on page 2-28) (refer to procedure 4.3) P8400 models or (refer to procedure 4.4)

2

P8500 models. If this solves the problem, go to “Final Actions” on page 2-10. Otherwise, continue to step 6.

Figure 2-9. Control Board Location

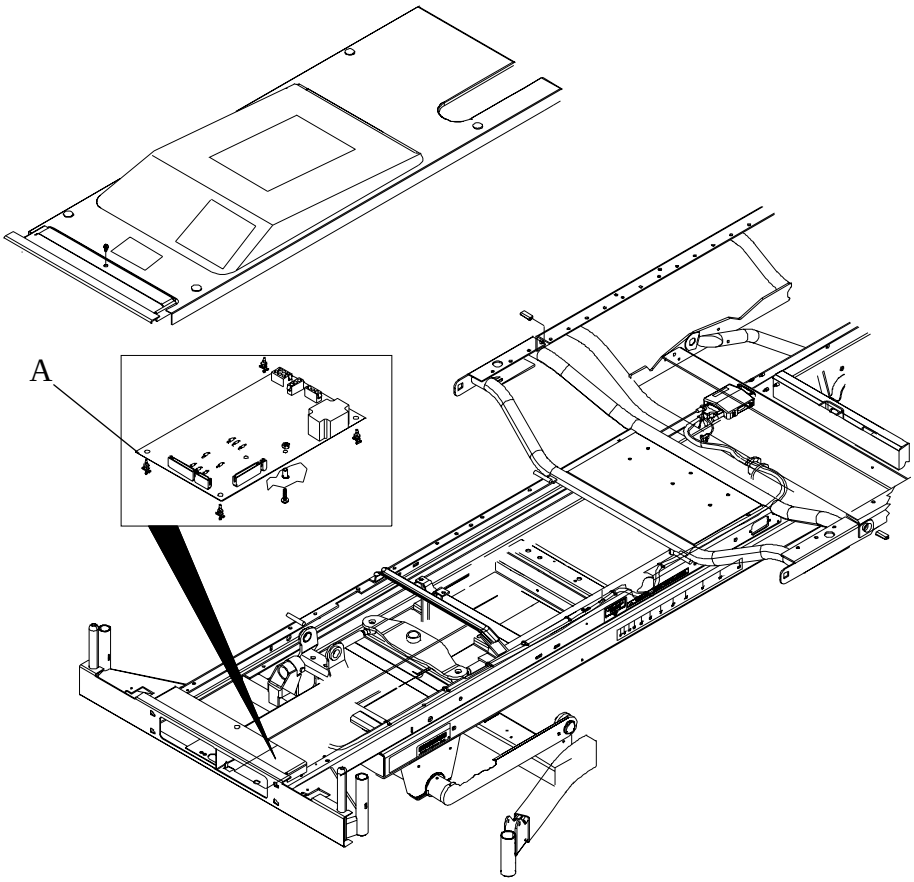

m038b157

6. Replace the knee motor (refer to procedure 4.14).

   This solves the problem.

   Yes ↓ **No** → Call Hill-Rom Technical Support at (800) 445-3720.

7. Go to “Final Actions” on page 2-10.

2.9 Trendelenburg Failure

The bed will not go into Trendelenburg when the switch is activated.

1. Set your VOM to measure V DC. At J/P 2, place your black probe into pin 4 and your red probe into pin 13. Activate the Trendelenburg switch. The voltage is approximately 12V DC.

   Yes ↓ **No** → Replace the Trendelenburg switch (A) or the cable between the switch and the control board (see figure 2-10 on page 2-29) (refer to procedure 4.24). If this solves the problem, go to "Final Actions" on page 2-10. Otherwise, continue to step 2.

Figure 2-10. Trendelenburg Switch Location

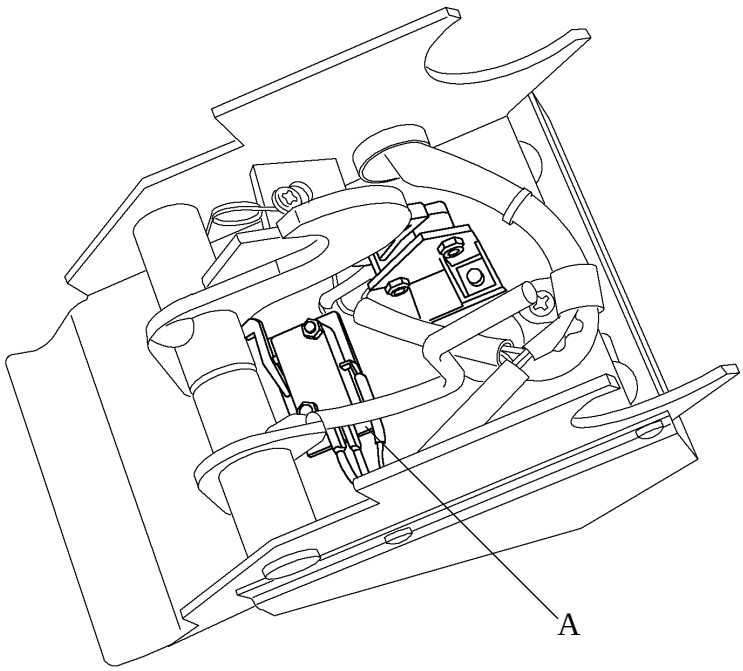

m038b126

2. Set your VOM to measure V DC. At J/P 2 place your black probe into pin 4 and your red probe into J/P 4 pin 4. Activate the Trendelenburg switch. The voltage is approximately 12V DC.

   Yes ↓ **No** → Replace the bed up limit switch or the cable between the switch and the control board is defective (refer to procedure 4.24). If this solves the problem, go to "Final Actions" on page 2-10. Otherwise, continue to step 3.

2

3. Set your VOM to measure V DC. At J/P 2, place your black probe into pin 4 and your red probe into J/P 4 pin 1. Activate the Trendelenburg switch. The voltage is approximately 12V DC.

   Yes ↓ **No** → Replace the hook limit switch or the cable between the switch and the control board (refer to procedure 4.24). If this solves the problem, go to "Final Actions" on page 2-10. Otherwise, continue to step 4.

4. Set your VOM to measure V DC. At J/P 3, place your black probe into pin 20 and your red probe into pin 18. The voltage is approximately 0V DC.

   Yes ↓ **No** → Replace the head down limit switch or the cable going to the limit switch (refer to procedure 4.11). If this solves the problem, go to "Final Actions" on page 2-10. Otherwise, continue to step 5.

5. Set your VOM to measure V DC. At J/P3, place your black probe into pin 2 and your red probe into pin 19. The voltage is approximately 12 V DC.

   Yes ↓ **No** → Replace the knee down limit switch or the cable going to the limit switch (refer to procedure 4.16). If this solves the problem, go to "Final Actions" on page 2-10. Otherwise, continue to step 6.

6. Set your VOM to measure V AC. At J/P 7, place your black probe into pin 2 and your red probe into pin 6. Activate the Trendelenburg switch. The voltage is between 100-130V AC.

   Yes ↓ **No** → Replace the control board (refer to procedure 4.3) P8400 models or (refer to procedure 4.4) P8500 models. If this solves the problem, go to "Final Actions" on page 2-10. Otherwise, continue to step 7.

7. Replace the hilow motor or the cable between the hilow motor and the control board (refer to procedure 4.17).

   This solves the problem.

   Yes ↓ **No** → Call Hill-Rom Technical Support at (800) 445-3720.

8. Go to "Final Actions" on page 2-10.

2.10 Reverse Trendelenburg Failure—P8400 Models

The bed will not go into Reverse Trendelenburg when the switch is selected on P8400 Models only.

1. Set your VOM to measure V DC. At J/P2, place your black probe into pin 4 and your red probe into pin 11. Activate the Reverse Trendelenburg switch. The voltage is approximately 12V DC.

   Yes ↓ **No** → Replace the Reverse Trendelenburg switch (A) or the cable between the switch and the control board (see figure 2-11 on page 2-31) (refer to procedure 4.26). If this solves the problem, go to "Final Actions" on page 2-10. Otherwise, continue to step 2.

Figure 2-11. Reverse Trendelenburg Switch Location

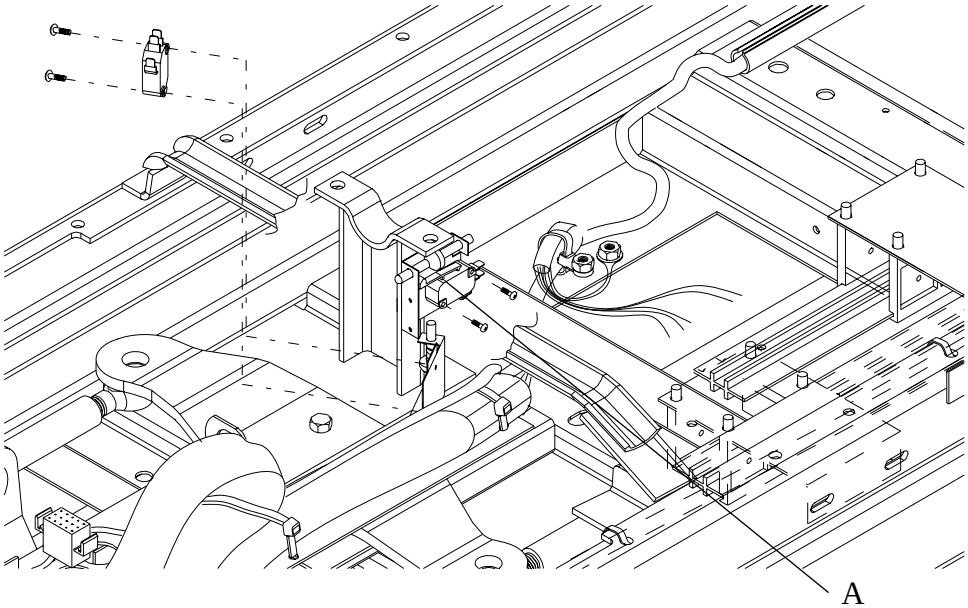

m038b132

2. Set your VOM to measure V DC. At J/P 2, place your black probe into pin 4 and your red probe into J/P 4 pin 4. The voltage is approximately 12V DC.

2

Yes **No**
↓ → Replace the bed up limit switch or the cable between the switch and the control board (refer to procedure 4.19). If this solves the problem, go to “Final Actions” on page 2-10. Otherwise, continue to step 3.

3. Set your VOM to measure V DC. At J/P 2, place your black probe into pin 4 and your red probe into J/P 4 pin 2. The voltage is approximately 12V DC.

   Yes **No**
   ↓ → Replace the latch limit switch or the cable between the switch and the control board (refer to procedure 4.25). If this solves the problem, go to “Final Actions” on page 2-10. Otherwise, continue to step 4.

4. Set your VOM to measure V DC. At J/P 3, place your black probe into pin 2 and your red probe into pin 18. The voltage is approximately 12V DC.

   Yes **No**
   ↓ → Replace the head down limit switch or the cable going to the limit switch (refer to procedure 4.11). If this solves the problem, go to “Final Actions” on page 2-10. Otherwise, continue to step 5.

5. Set your VOM to measure V DC. At J/P 3, place your black probe into pin 2 and your red probe into pin 19. The voltage is approximately 12V DC.

   Yes **No**
   ↓ → Replace the knee down limit switch or the cable going to the limit switch (refer to procedure 4.16). If this solves the problem, go to “Final Actions” on page 2-10. Otherwise, continue to step 6.

6. Set your VOM to measure V AC. At J/P 7, place your black probe into pin 2 and your red probe into pin 6. Activate the Trendelenburg switch. The voltage is between 100-130V AC.

   Yes **No**
   ↓ → Replace the control board (refer to procedure 4.3). If this solves the problem, go to “Final Actions” on page 2-10. Otherwise, continue to step 7.

7. Replace the hilow motor or the cable between the hilow motor and the control board (refer to procedure 4.17).

   This solves the problem.

Yes **No**
↓ → Call Hill-Rom Technical Support at (800) 445-3720.

8. Go to “Final Actions” on page 2-10.

2.11 Reverse Trendelenburg Failure—P8500 Models

The bed will not go into Reverse Trendelenburg when the switch is activated—P8500 Models.

1. Set your VOM to measure V DC. At J/P 2, place your black probe into pin 4 and your red probe into pin 11. Activate the Reverse Trendelenburg switch. The voltage is approximately 12V DC.

   Yes ↓ **No** → Replace the Reverse Trendelenburg switch or the cable between the switch and the control board (refer to procedure 4.26). If this solves the problem, go to “Final Actions” on page 2-10. Otherwise, continue to step 2.

2. Set your VOM to measure V DC. At J/P 2, place your black probe into pin 4 and your red probe into J/P 4 pin 3. Activate the Reverse Trendelenburg switch. The voltage is approximately 12V DC.

   Yes ↓ **No** → Replace the bed down limit switch or the cable between the switch and control board (refer to procedure 4.20). If this solves the problem, go to “Final Actions” on page 2-10. Otherwise, continue to step 3.

3. Set your VOM to measure V DC. At J/P 2, place your black probe into pin 4 and your red probe into J/P 4 pin 2. Activate the Reverse Trendelenburg switch. The voltage is approximately 12V DC.

   Yes ↓ **No** → Replace the latch limit switch or the cable between the switch and the control board (refer to procedure 4.25). If this solves the problem, go to “Final Actions” on page 2-10. Otherwise, continue to step 4.

4. Set your VOM to measure V DC. At J/P 3, place your black probe into pin 2 and your red probe into pin 18. The voltage is approximately 12 V DC.

   Yes ↓ **No** → Replace the head down limit switch or the cable going to the limit switch (refer to procedure 4.11). If this solves the problem, go to “Final Actions” on page 2-10. Otherwise, continue to step 5.

5. Set your VOM to measure V DC. At J/P 3, place your black probe into pin 20 and your red probe into pin 19. The voltage is approximately 0V DC.

Yes **No**
↓ → Replace the knee down limit switch or the cable going to the limit switch (refer to procedure 4.16). If this solves the problem, go to “Final Actions” on page 2-10. Otherwise, continue to step 6.

6. Set your VOM to measure V AC. At J/P 7, place your black probe into pin 2 and your red probe into pin 3. Activate the Reverse Trendelenburg switch. The voltage is between 100-130V AC.

Yes **No**
↓ → Replace the control board (A) (see figure 2-12 on page 2-35) (refer to procedure 4.4). If this solves the problem, go to “Final Actions” on page 2-10. Otherwise, continue to step 7.

Figure 2-12. Control Board Location (P8500 Models)

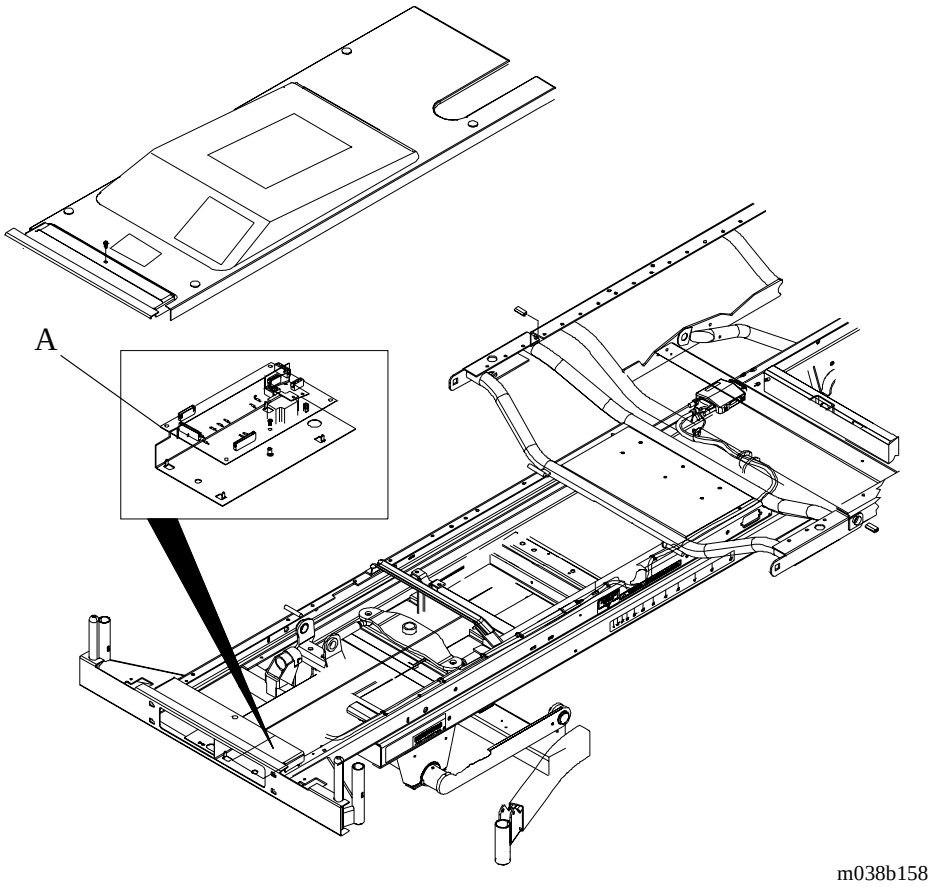

7. Replace the hilow motor or the cable between the hilow motor and the control board (refer to procedure 4.17).

2

This solves the problem.

Yes **No**
↓ → Call Hill-Rom Technical Support at (800) 445-3720.

8. Go to “Final Actions” on page 2-10.

2.12 Trendelenburg Out Control Switch Failure—P8400 Models

The bed will not come out of Trendelenburg when the Trendelenburg out switch is activated.

1. Set your VOM to measure V DC. At J/P 2, place your black probe into pin 4 and your red probe into pin 12. Activate the bed up switch. The voltage is approximately 12V DC.

   Yes ↓ **No** → Replace the bed up switch or the cable between the switch and control board (refer to procedure 4.30). If this solves the problem, go to "Final Actions" on page 2-10. Otherwise, continue to step 2.

2. Set your VOM to measure V DC. At J/P 2, place your black probe into pin 4 and your red probe into J/P 4 pin 4. Activate the bed up switch. The voltage is approximately 12V DC.

   Yes ↓ **No** → Replace the bed up limit switch (A) (see figure 2-13 on page 2-37) or the cable between the switch and the control board (refer to procedure 4.30). If this solves the problem, go to "Final Actions" on page 2-10. Otherwise, continue to step 3.

Figure 2-13. Hilow Limit Switch Location (P8400 Models)

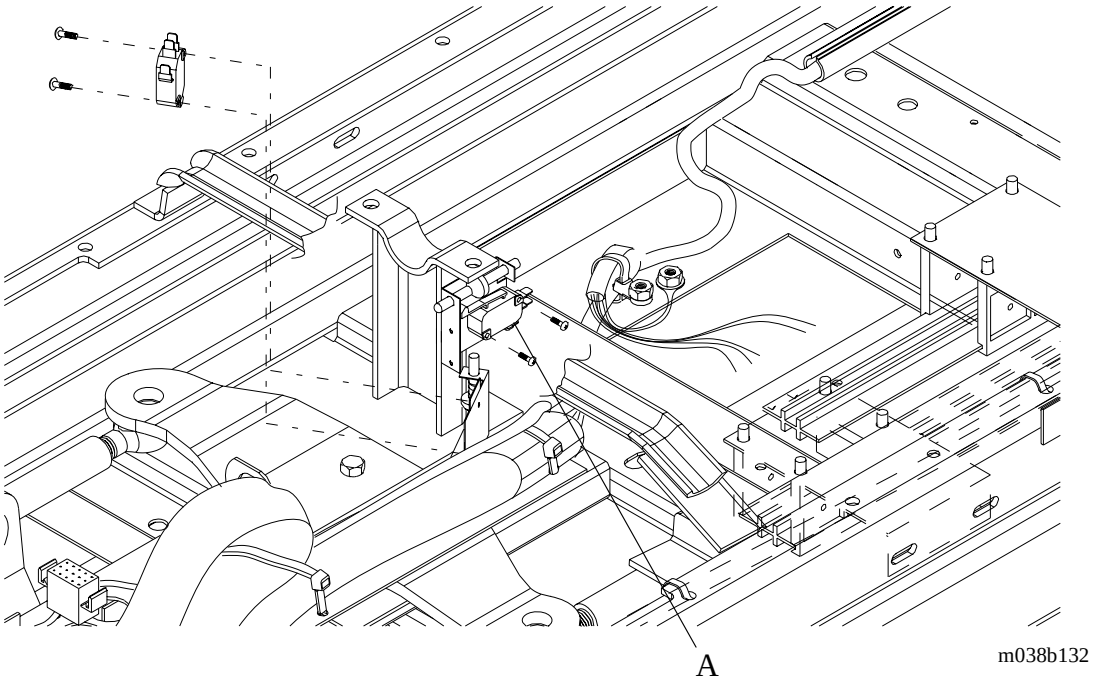

2

3. Set your VOM to measure V DC. At J/P 2, place your black probe into pin 4 and your red probe into J/P 4 pin 3. Activate the bed up switch. The voltage is approximately 12V DC.

   Yes ↓ **No** → Replace the hook limit switch or the cable between the switch and the control board (refer to procedure 4.24). If this solves the problem, go to “Final Actions” on page 2-10. Otherwise, continue to step 4.

4. Set your VOM to measure V AC. At J/P 7, place your black probe into pin 2 and your red probe into pin 3. Activate the Trendelenburg switch. The voltage is between 100-130V AC.

   Yes ↓ **No** → Replace the control board (refer to procedure 4.3) P8400 models or (refer to procedure 4.4) P8500 models. If this solves the problem, go to “Final Actions” on page 2-10. Otherwise, continue to step 5.

5. Replace the hilow motor or the cable between the hilow motor and the control board (refer to procedure 4.17).

   This solves the problem.

   Yes ↓ **No** → Call Hill-Rom Technical Support at (800) 445-3720.

6. Go to “Final Actions” on page 2-10.

2.13 Reverse Trendelenburg Out Control Switch Failure—P8400 Models

The bed will not come out of Reverse Trendelenburg when the bed up switch is activated on P8400 models only.

1. Set your VOM to measure V DC. At J/P 2, place your black probe into pin 4 and your red probe into pin 12. Activate the bed up switch. The voltage is approximately 12V DC.

   Yes ↓ **No** → Replace the bed up switch or the cable between the switch and the control board (refer to procedure 4.30). If this solves the problem, go to "Final Actions" on page 2-10. Otherwise, continue to step 2.

2. Set your VOM to measure V DC. At J/P 2, place your black probe into pin 4 and your red probe into J/P 4 pin 4. Activate the bed up switch. The voltage is approximately 12V DC.

   Yes ↓ **No** → Replace the bed up limit switch or the cable between the switch and control board (refer to procedure 4.30). If this solves the problem, go to "Final Actions" on page 2-10. Otherwise, continue to step 3.

3. Set your VOM to measure V DC. At J/P 2, place your black probe into pin 4 and your red probe into J/P 4 pin 2. Activate the bed up switch. The voltage is approximately 12V DC.

   Yes ↓ **No** → Replace the latch limit switch or the cable between the switch and the control board (refer to procedure 4.26). If this solves the problem, go to "Final Actions" on page 2-10. Otherwise, continue to step 4.

4. Set your VOM to measure V AC. At J/P 7, place your black probe into pin 2 and your red probe into pin 3. Activate the bed up switch. The voltage is between 100-130V AC.

   Yes ↓ **No** → Replace the control board (A) (see figure 2-14 on page 2-40) (refer to procedure 4.3). If this solves the problem, go to "Final Actions" on page 2-10. Otherwise, continue to step 5.

2

Figure 2-14. Control Board Location (P8400 Models)

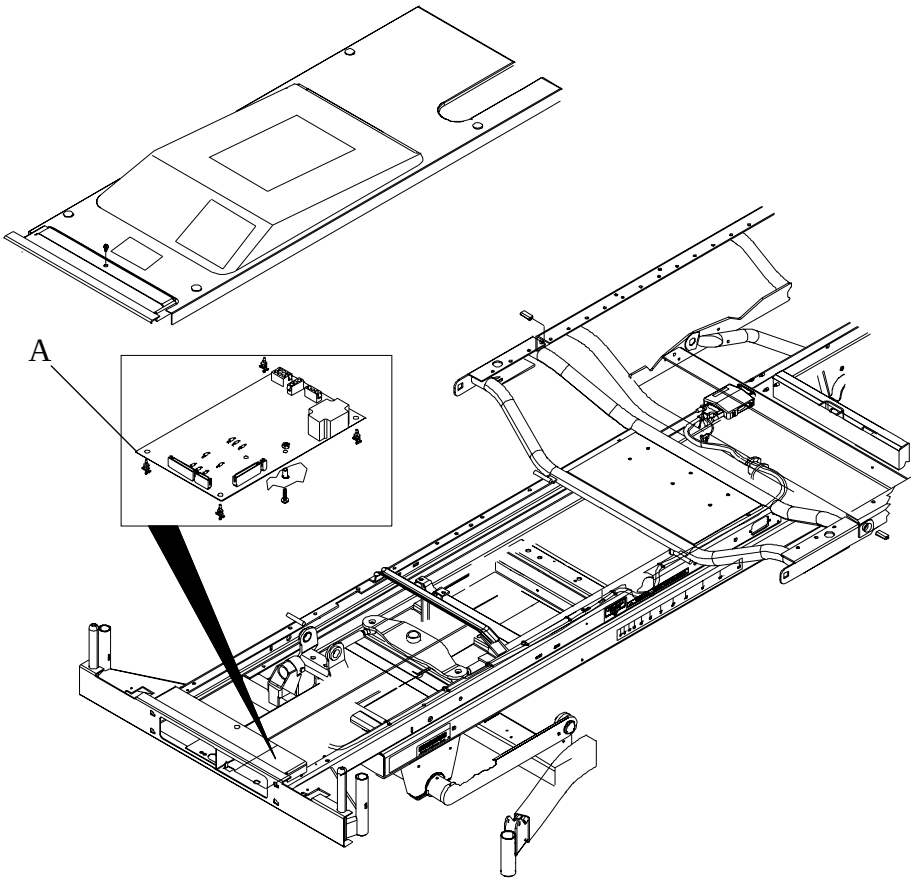

m038b157

5. Replace the hilow motor or the cable between the hilow motor and the control board (refer to procedure 4.17).

   This solves the problem.

   Yes ↓ **No** → Call Hill-Rom Technical Support at (800) 445-3720.

6. Go to “Final Actions” on page 2-10.

2.14 Reverse Trendelenburg Out Control Switch Failure—P8500 Models

The bed will not come out of Reverse Trendelenburg when the Reverse Trendelenburg out switch is activated on P8500 models only.

1. Set your VOM to measure V DC. At J/P 2, place your black probe into pin 4 and your red probe into pin 10. Activate the bed down switch. The voltage is approximately 12V DC.

   Yes ↓ **No** → Replace the bed down switch or the cable between the switch and the control board (refer to procedure 4.30). If this solves the problem, go to "Final Actions" on page 2-10. Otherwise, continue to step 2.

2. Set your VOM to measure V DC. At J/P 2, place your black probe into pin 4 and your red probe into J/P 4 pin 3. Activate the bed down switch. The voltage is approximately 12V DC.

   Yes ↓ **No** → Replace the bed down limit switch (A) (see figure 2-15 on page 2-41) or the cable between the switch and the control board (refer to procedure 4.30). If this solves the problem, go to "Final Actions" on page 2-10. Otherwise, continue to step 3.

Figure 2-15. Hilow Down Limit Switch Location

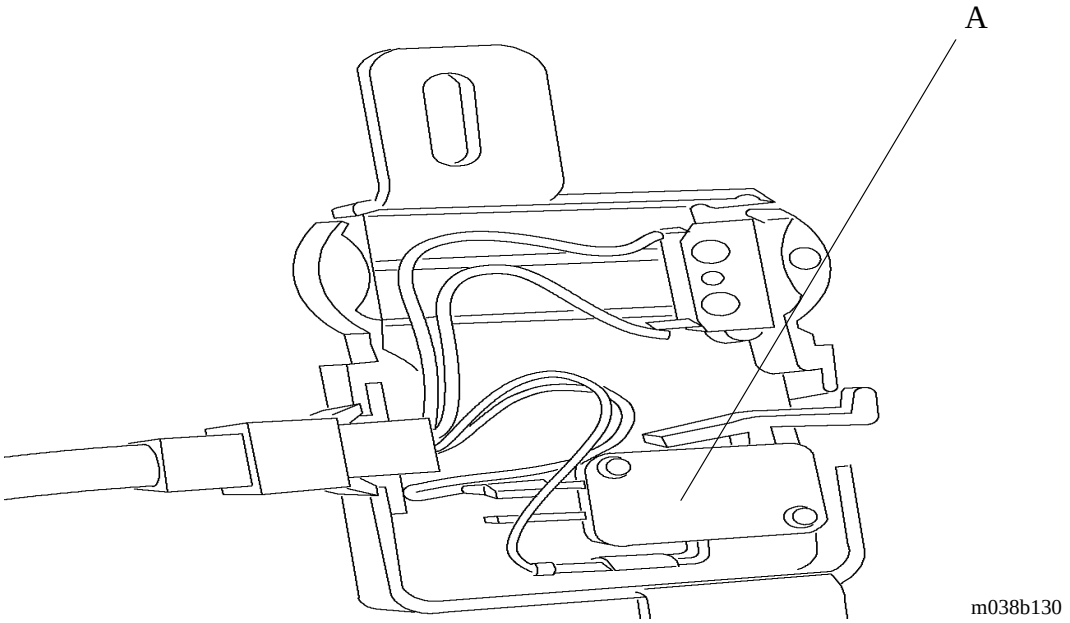

2

3. Set your VOM to measure V DC. At J/P 2, place your black probe into pin 4 and your red probe into J/P 4 pin 2. Activate the bed down switch. The voltage is approximately 12V DC.

   Yes ↓ **No** → Replace the latch limit switch or the cable between the switch and the control board (refer to procedure 4.26). If this solves the problem, go to "Final Actions" on page 2-10. Otherwise, continue to step 4.

4. Set your VOM to measure V AC. At J/P 7, place your black probe into pin 2 and your red probe into pin 6. Activate the bed down switch. The voltage is between 100-130V AC.

   Yes ↓ **No** → Replace the control board (refer to procedure 4.4). If this solves the problem, go to "Final Actions" on page 2-10. Otherwise, continue to step 5.

5. Replace the hilow motor or the cable between the hilow motor and the control board (refer to procedure 4.17).

   This solves the problem.

   Yes ↓ **No** → Call Hill-Rom Technical Support at (800) 445-3720.

6. Go to "Final Actions" on page 2-10.

2.15 Bed Air Surface Failure

The bed air surface does not operate when in Comfort Mode.

1. The excessive airloss LED is on at the control console.

   Yes ↓ **No** → Go to step 3.

2. Turn the air power system switch off and back on. Test the air system. If this solves the problem, go to “Final Actions” on page 2-10. Otherwise, continue to step 3.

NOTE:
Testing the air system will take a minimum of 7-10 minutes before the system activates the excessive airloss LED. Make sure you wait the allotted time limit, otherwise you might overlook the problem.

3. The air system power switch is on.

   Yes ↓ **No** → Turn the air system power switch on, and test the air system. If this solves the problem, go to “Final Actions” on page 2-10. Otherwise, continue to step 4.

4. Press the firm switch to inflate the air mattress. The mattress inflates.

   Yes ↓ **No** → Go to step 6.

5. Go to step 29.

6. Press the soft switch to deflate the air mattress. The mattress deflates.

   Yes ↓ **No** → Go to step 8.

7. Go to step 9.

8. Check the air system P.C. board (A) connectors, and test the air system (see figure 2-16 on page 2-44). The mattress deflates.

2

Figure 2-16. Air System P.C. Board Location

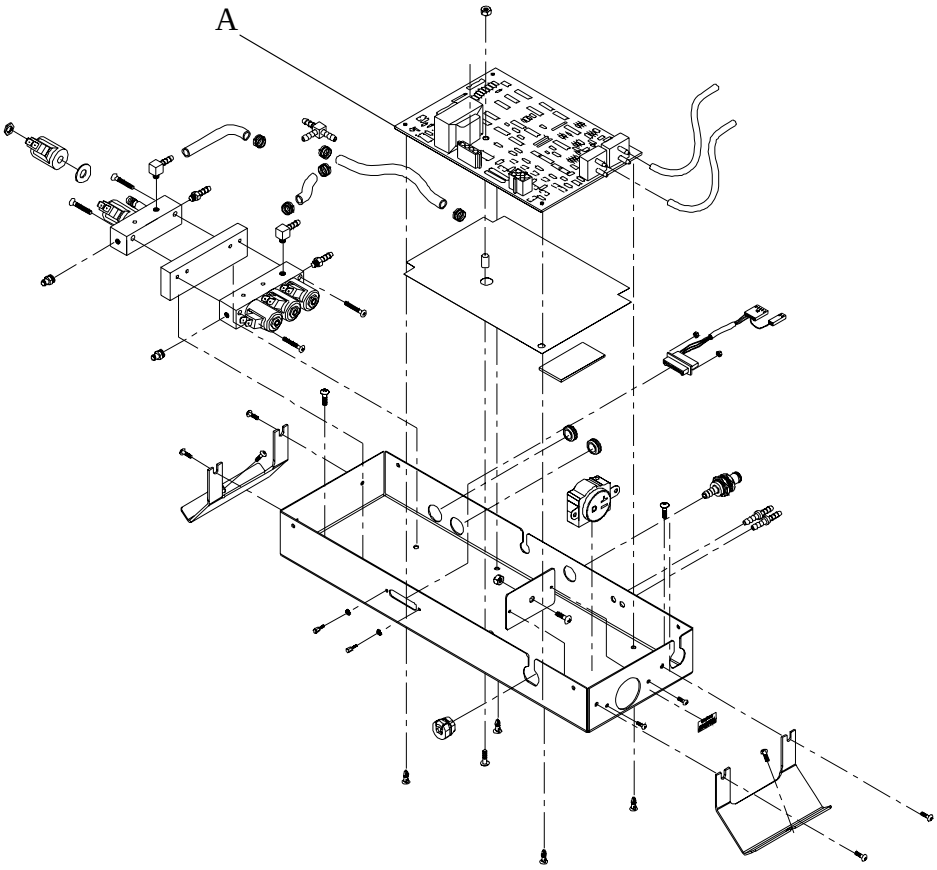

m038b161

Yes **No**
↓ → Replace the air P.C. board (refer to procedure 4.5). If this solves the problem, go to "Final Actions" on page 2-10. Otherwise, call Hill-Rom Technical Support at (800) 445-3720.

9. Test the firm switch. The mattress inflates.

Yes **No**
↓ → Go to step 11.

10. Press the soft switch to deflate the air mattress.

11. The air compressor is running.

Yes **No**
↓ → Go to step 25.

12. The solenoid clicks.

Yes **No**
↓ → Go to step 17.

13. Check the pop-off valve on the manifold. Check for proper hose connections, pinched air hoses, or air leaks. Problems were found.

    Yes ↓ **No** → Replace the inflate manifold (refer to procedure 4.5). If this solves the problem, go to “Final Actions” on page 2-10. Otherwise, call Hill-Rom Technical Support at (800) 445-3720.

14. Take the appropriate actions to solve the problem.

15. This solves the problem.

    Yes ↓ **No** → Go to step 17.

16. Go to “Final Actions” on page 2-10.

17. Set your VOM to measure V AC. At J/P 29, place your black probe into pin 1 and your red probe into pin 5. AC voltage is present.

    Yes ↓ **No** → Go to step 21.

18. Replace the solenoid (refer to procedure 4.6).

19. This solves the problem

    Yes ↓ **No** → Go to step 21.

20. Go to “Final Actions” on page 2-10.

21. Check the continuity of the solenoid. The solenoid is shorted.

    Yes ↓ **No** → Replace both the solenoid and P.C. board (refer to procedure 4.6). If this solves the problem, go to “Final Actions” on page 2-10. Otherwise, call Hill-Rom Technical Support at (800) 445-3720.

22. Replace the air system P.C. board (refer to procedure 4.5).

23. This solves the problem.

    Yes ↓ **No** → Go to step 25.

24. Go to “Final Actions” on page 2-10.

2

25. Set your VOM to measure V AC. At J/P 29, place your black probe into pin 1 and your red probe into pin 4. AC voltage is present.

    Yes ↓ **No** → Replace the air system P.C. board (refer to procedure 4.5). If this solves the problem, go to "Final Actions" on page 2-10. Otherwise, call Hill-Rom Technical Support at (800) 445-3720.

26. Replace both the solenoid and the P.C. board (refer to procedure 4.6).

27. This solves the problem.

    Yes ↓ **No** → Call Hill-Rom Technical Support at (800) 445-3720.

28. Go to "Final Actions" on page 2-10.

29. Press the comfort switch to soften the mattress. The mattress deflates.

    Yes ↓ **No** → Go to step 35.

30. Change the mode of the mattress to prevention. The mattress inflates.

    Yes ↓ **No** → Go to step 33.

31. Press firmly on the mattress and release. The mattress inflates.

    Yes ↓ **No** → Replace the sleep surface control board (refer to procedure 4.5). If this solves the problem, go to "Final Actions" on page 2-10. Otherwise, call Hill-Rom Technical Support at (800) 445-3720.

32. The top bladder system has no problem.

33. The automatic LED lights.

    Yes ↓ **No** → Check the automatic switch or the wiring harness.

34. Replace the sleep surface control board (refer to procedure 4.5). If this solves the problem, go to "Final Actions" on page 2-10. Otherwise, continue to step 35.

35. Press a different switch to soften the mattress. The mattress deflates.

    Yes ↓ **No** → Go to step 39.

36. Replace the firm or soft switch (refer to procedure 4.2).

37. This solves the problem.

    Yes ↓ **No** → Go to step 39.

38. Go to “Final Actions” on page 2-10.

39. Check for continuity of the solenoids. The solenoid is shorted.

    Yes ↓ **No** → Go to step 43.

40. Replace the solenoid (refer to procedure 4.6).

41. This solves the problem.

    Yes ↓ **No** → Go to step 43.

42. Go to “Final Actions” on page 2-10.

43. Set your VOM to measure V AC. At J/P 29, place your black probe into pin 1 and your red probe into pin 6. AC voltage is present.

    Yes ↓ **No** → Replace the sleep surface control board (refer to procedure 4.5). If this solves the problem, go to “Final Actions” on page 2-10. Otherwise, continue to step 44.

44. Replace the solenoid (refer to procedure 4.6).

    This solves the problem.

    Yes ↓ **No** → Call Hill-Rom Technical Support at (800) 445-3720.

45. Go to “Final Actions” on page 2-10.

2.16 Night Light Failure

The night light does not work.

1. Change the night light bulb.

2. The night light works.

   Yes ↓ **No** → Go to step 4

3. Go to “Final Actions” on page 2-10.

4. The night light switch is on.

   Yes ↓ **No** → Turn the switch on and test. If this solves the problem, go to “Final Actions” on page 2-10. Otherwise, continue to step 6.

5. Place your hand close to the photocell. A voltage fluctuation occurs.

   Yes ↓ **No** → Replace the photocell. If this solves the problem, go to “Final Actions” on page 2-10. Otherwise, continue to step 6.

6. Check the night light sensor adjustment. The night light comes on.

   Yes ↓ **No** → Go to step 8.

7. Adjust the night light sensor to the desired setting. If this solves the problem, go to “Final Actions” on page 2-10. Otherwise, continue to step 8.

8. Set your VOM to measure V AC. At J/P 12, place your black probe into pin 3 and your red probe into pin 1. The voltage between 100-130V AC.

   Yes ↓ **No** → Check and see if you have power at the outlet. If not, then replace the main power cord.

9. Disconnect J 14 (sensor cable-old style) (A) or J 14 (sensor cable-new style) (B) from the night light board (C) (see figure 2-17 on page 2-49).

Figure 2-17. Sensor Cable Location

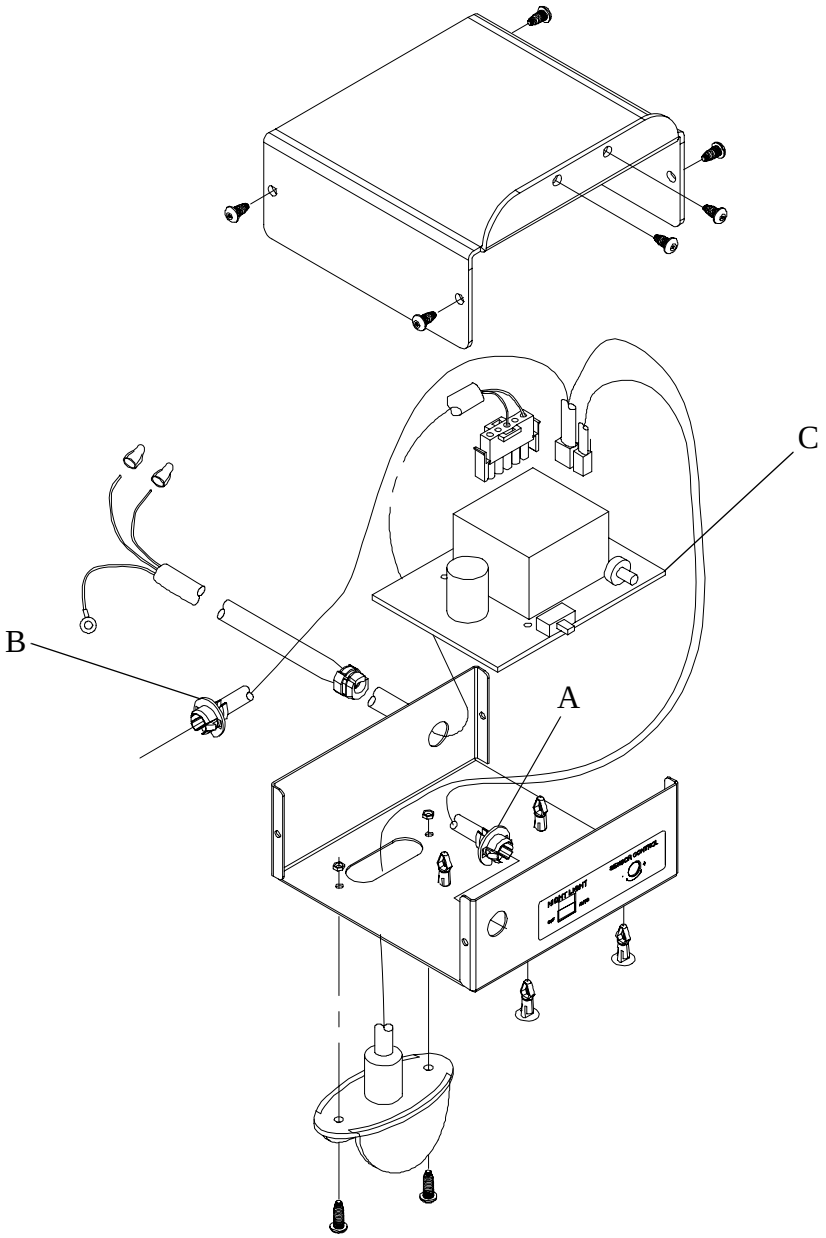

10. The night light is on.

Yes	No	
↓	→	Replace the night light board (refer to procedure 4.5). If this solves the problem, go to “Final Actions” on page 2-10. Otherwise, call Hill-Rom Technical Support at (800) 445-3720.

2

11. Replace the night light sensor or sensor cable.

    This solves the problem.

    Yes ↓ **No** → Replace the night light board (refer to procedure 4.5). If this solves the problem, go to “Final Actions” on page 2-10. Otherwise, call Hill-Rom Technical Support at (800) 445-3720.

12. Go to “Final Actions” on page 2-10.

Chapter 3
Theory of Operation

Chapter Contents

Bed Control Cable Assembly Wiring Diagram—P/N 45896 . . . . . 3 - 3

Bed Wiring Diagram—P/N 45926 . . . . . 3 - 4

P.C. Board Wiring Diagram—Integrated Air Support System Board P/N 44047-01 . . . . . 3 - 5

P.C. Board Wiring Diagram—Night Light Board P/N 43200-01 (P8400 Models Only) . . . . . 3 - 6

P.C. Board Wiring Diagram—Night Light Board P/N 33577 (P8500 Models Only) . . . . . 3 - 7

P.C. Board Wiring Diagram—Night Light Board P/N 40217-02 (P8500 Models Only) . . . . . 3 - 8

P.C. Board Wiring Diagram—Bed Exit Board P/N 44482-01 . . . . . 3 - 9

P.C. Board Wiring Diagram—Control Board P/N 45701-01 (P8400 Models Only) . . . . . 3 - 10

P.C. Board Wiring Diagram—Control Board P/N 45789 (P8500 Models Only) . . . . . 3 - 11

P.C. Board Wiring Diagram—Nurse Control Panel P/N 44135-03 (P8400 Models Only) and P/N 44135-04 (P8500 Models Only) . . . . . 3 - 12

P.C. Board Wiring Diagram—Siderail Interface Board P/N 44578 . . . . . 3 - 13

Electrical Description . . . . . 3 - 14

- Motors . . . . . 3 - 14
- Hilow . . . . . 3 - 15
- Head . . . . . 3 - 15
- Knee . . . . . 3 - 15
- Thermal Resets . . . . . 3 - 16

3

Motor Capacitors . . . . . 3 - 16
Integrated Air Support System . . . . . 3 - 16
Patient Controls. . . . . 3 - 17
Head . . . . . 3 - 17
Knee . . . . . 3 - 17
Hilow . . . . . 3 - 17
Mattress. . . . . 3 - 17
Control Board—Theory of Operation. . . . . 3 - 18

3

Bed Control Cable Assembly Wiring Diagram—P/N 45896

Figure 3-1. Bed Control Cable Assembly Wiring Diagram—P/N 45896

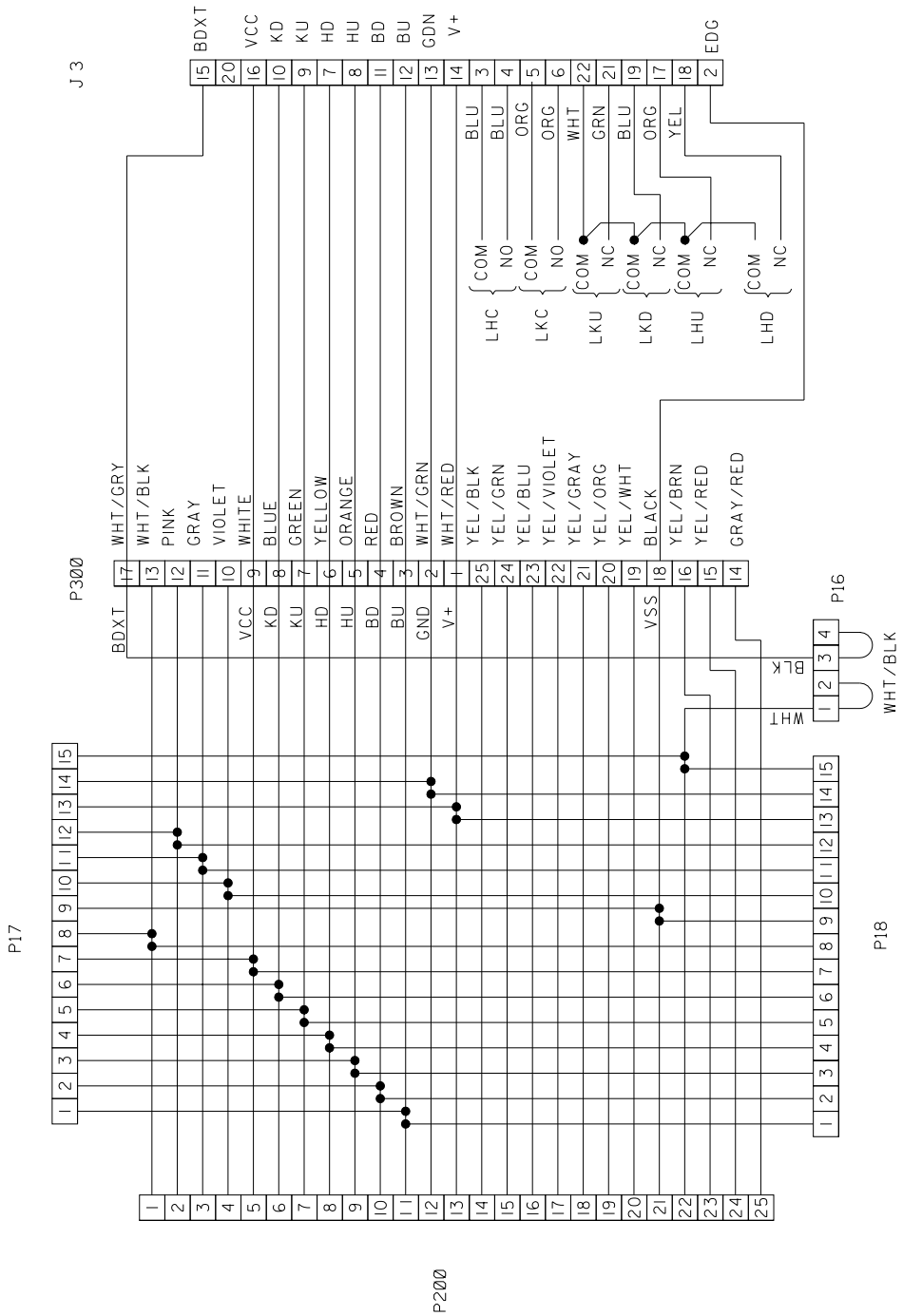

m038b060

Bed Wiring Diagram—P/N 45926

Figure 3-2. Bed Wiring Diagram—P/N 45926

3

Refer to fold-out FO 3-1 at the rear of this manual.

P.C. Board Wiring Diagram—Integrated Air Support System Board P/N 44047-01

Figure 3-3. P.C. Board Wiring Diagram—Integrated Air Support System Board P/N 44047-01

Refer to fold-out FO 3-2 at the rear of this manual.

3

P.C. Board Wiring Diagram—Night Light Board P/N 43200-01 (P8400 Models Only)

Figure 3-4. P.C. Board Wiring Diagram—Night Light Board P/N 43200-01 (P8400 Models Only)

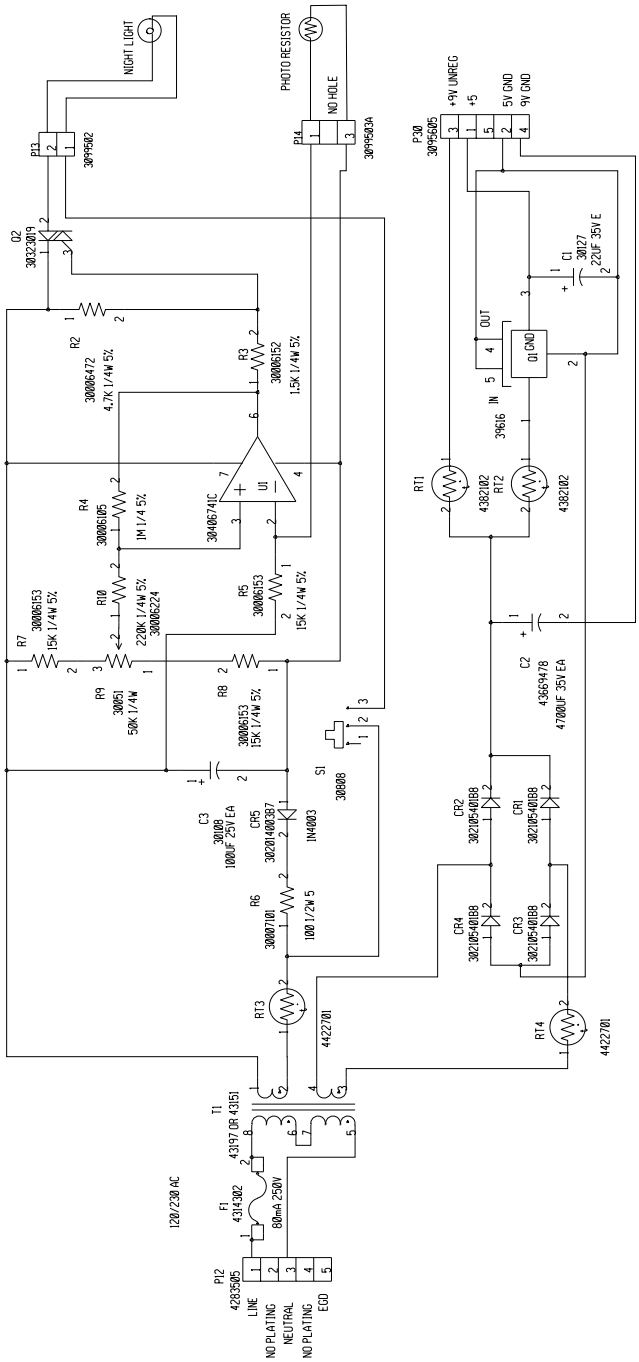

m038b041

P.C. Board Wiring Diagram—Night Light Board P/N 33577 (P8500 Models Only)

Figure 3-5. P.C. Board Wiring Diagram—Night Light Board P/N 33577 (P8500 Models Only)

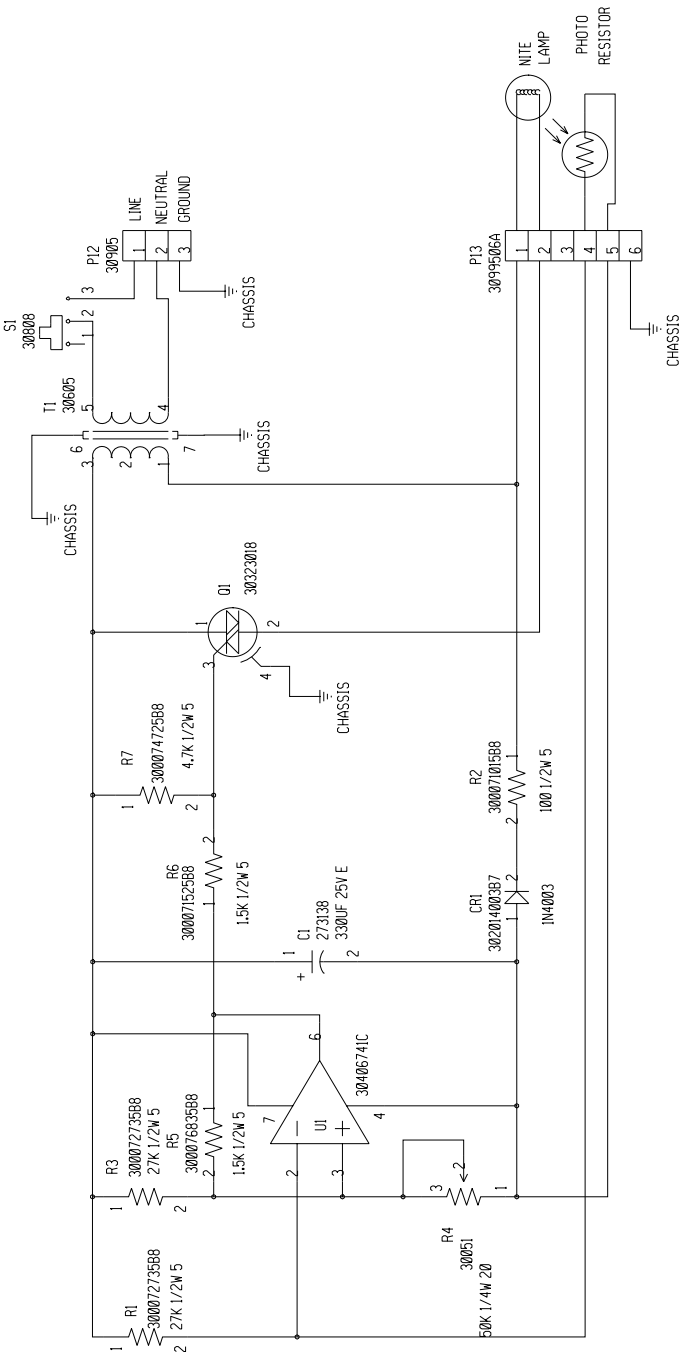

m038b043

3

P.C. Board Wiring Diagram—Night Light Board P/N 40217-02 (P8500 Models Only)

Figure 3-6. Board Wiring Diagram—Night Light Board P/N 40217-02 (P8500 Models Only)

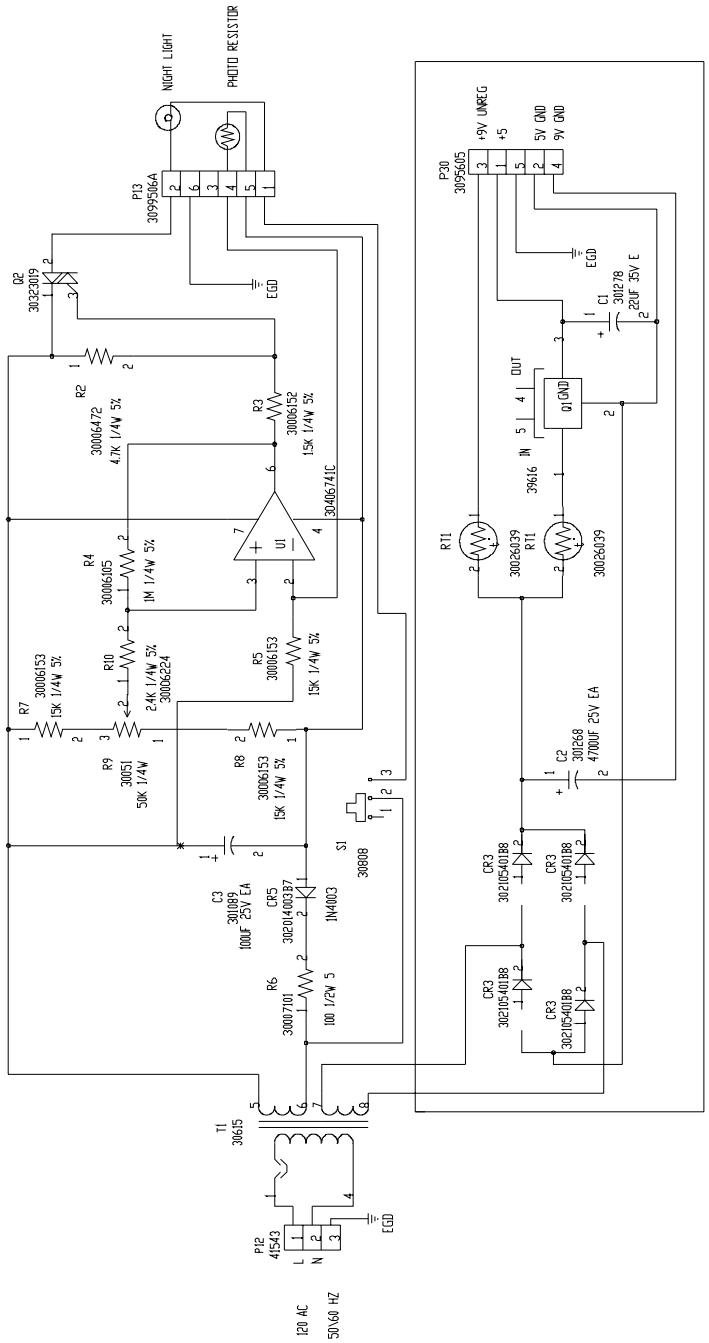

m038b156

P.C. Board Wiring Diagram—Bed Exit Board P/N 44482-01

Figure 3-7. P.C. Board Wiring Diagram—Bed Exit Board P/N 44482-01

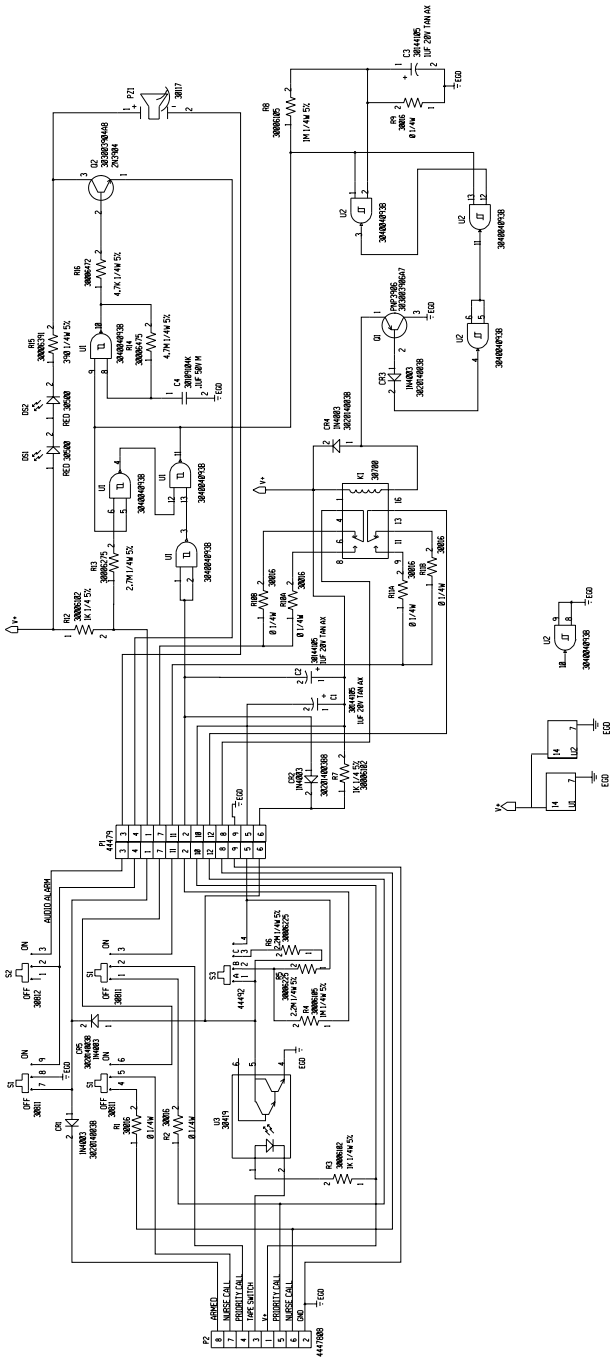

m038b047

P.C. Board Wiring Diagram—Control Board P/N 45701-01 (P8400 Models Only)

Figure 3-8. P.C. Board Wiring Diagram—Control Board P/N 45701-01 (P8400 Models Only)

3

Refer to fold-out FO 3-3 at the rear of this manual.

P.C. Board Wiring Diagram—Control Board P/N 45789 (P8500 Models Only)

Figure 3-9. P.C. Board Wiring Diagram—Control Board P/N 45789 (P8500 Models Only)

Refer to fold-out FO 3-4 at the rear of this manual.

3

P.C. Board Wiring Diagram—Nurse Control Panel P/N 44135-03 (P8400 Models Only) and P/N 44135-04 (P8500 Models Only)

Figure 3-10. P.C. Board Wiring Diagram—Nurse Control Panel P/N 44135-03 (P8400 Models Only) and P/N 44135-04 (P8500 Models Only)

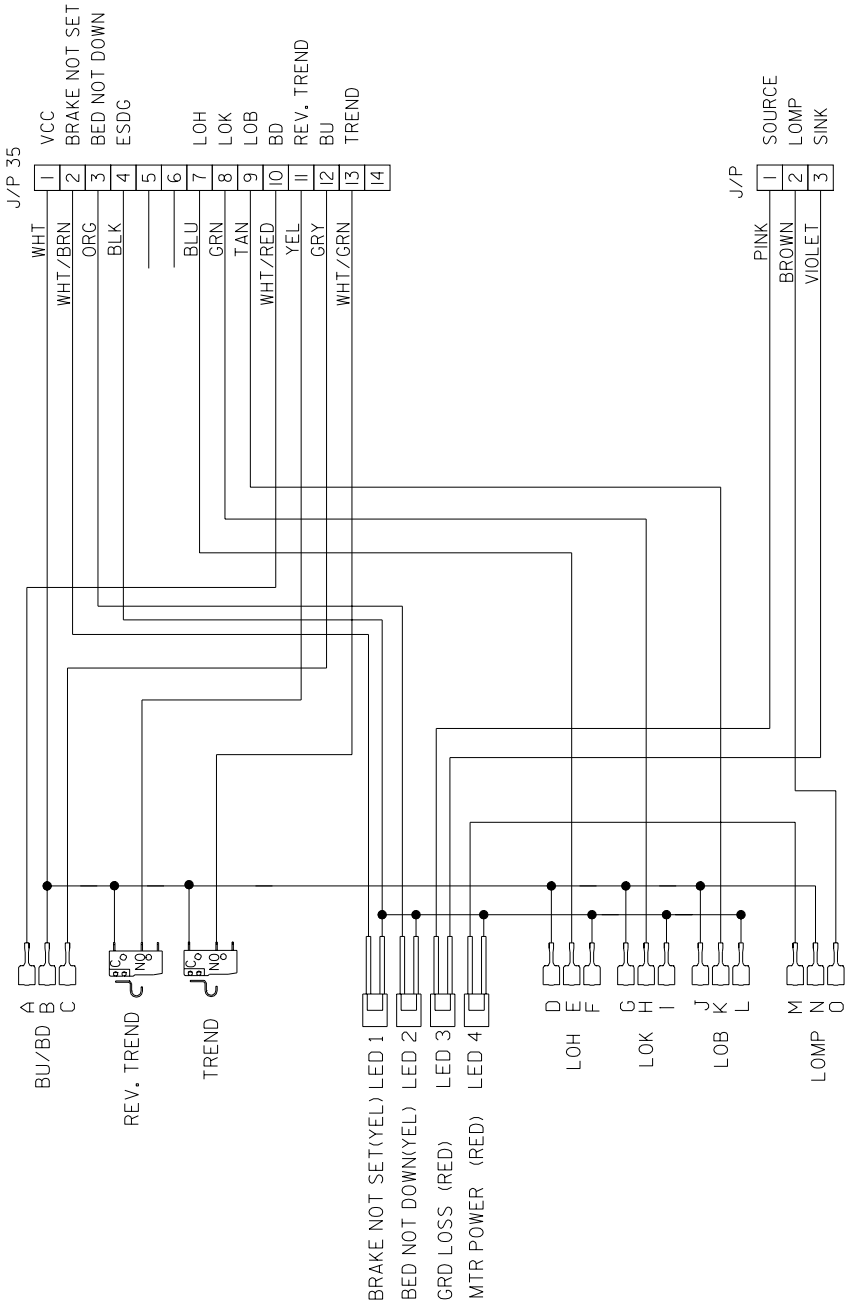

m038b057

P.C. Board Wiring Diagram—Siderail Interface Board P/N 44578

Figure 3-11. P.C. Board Wiring Diagram—Siderail Interface Board P/N 44578

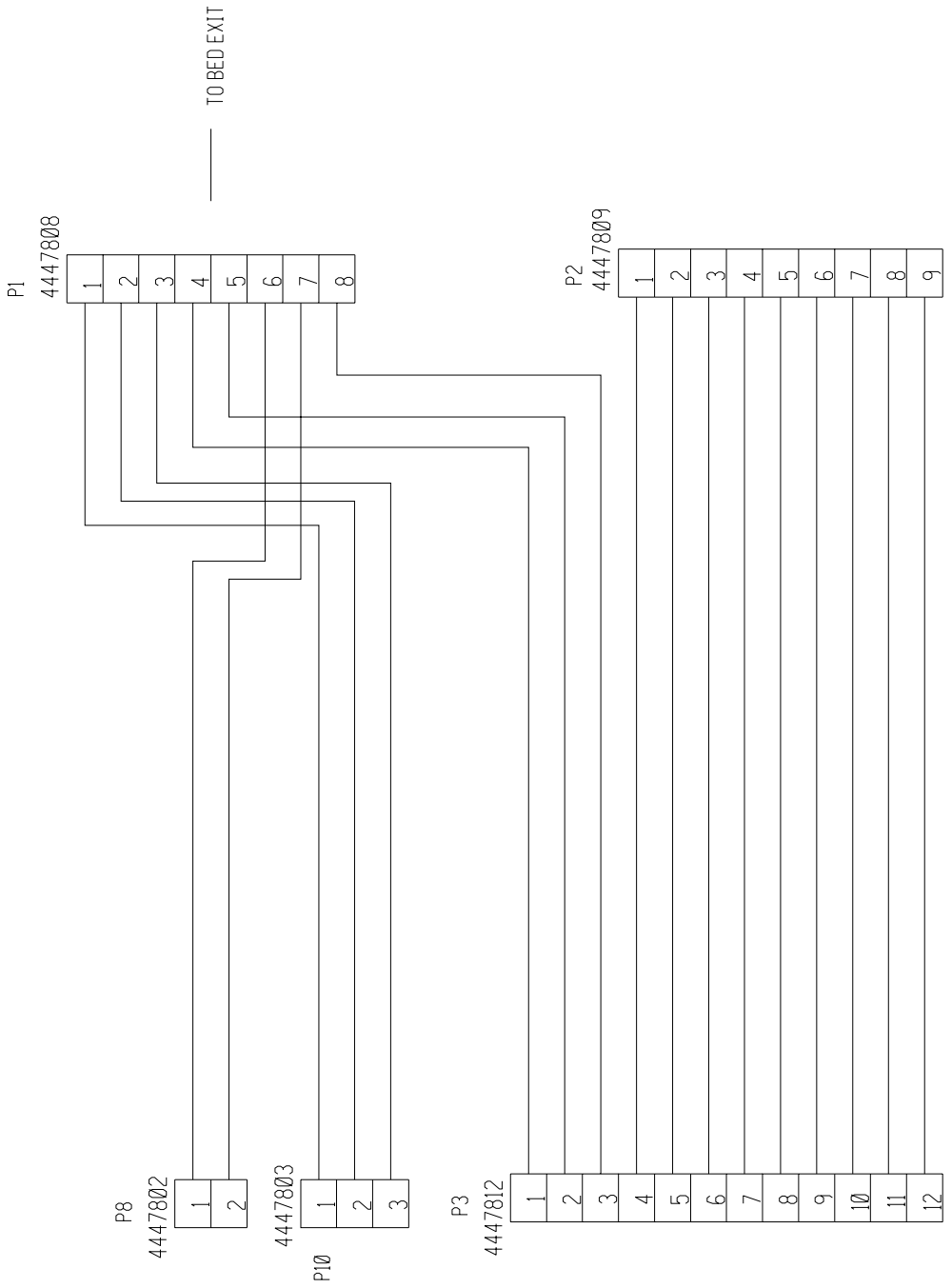

m038b059

Electrical Description

The electrical power system is mechanically insulated from the metal parts of the bed. No additional electrical components, such as isolation transformers, are required to make this bed meet applicable electrical codes. The insulation materials are of the type that will not deteriorate to an unsafe level over an 18 year period with normal use.

Each bed is factory tested for complete operation with and without load. Each bed is tested for insulation integrity and micro leakage currents. Before shipment, each bed must indicate less that 65 micro amperage leakage current ungrounded on 115 volt model beds.

The supply cord is #18 AWG low leakage three conductor type STO. It extends six feet from the head end of the bed. The supply cord is UL listed, and the attachment plug cap is UL listed hospital grade.

All electrical components of this bed have been UL approved for this application.

This bed is a retractable type that moves the patient closer to the head end of the bed automatically when the head section is elevated. When the head section is elevated, the overall length of the bed is reduced in proportion to the elevation of the head section.

The bed can contain an optional night light that automatically activates as the ambient light decreases. The light illuminates an area under the bed at both sides.

The bed automatically tests the electrical circuitry of the bed to ensure that the system is properly wired in regard to ground and correct polarity. Deficiencies in the grounding or the polarity of the building wiring to this bed are automatically indicated by a red signal light located in the attendant control console at the foot end of the bed.

NOTE:
Beds plugged into an isolated power source will activate the red signal light.

Motors

There are three individual motors to power the separate functions of the bed. These motors have the following specifications:

Hilow

- 1.8 amps maximum
- Permanently lubricated
- Totally enclosed
- Single phase
- Overload protected with reset thermal
- 115 volts AC, 60 hertz

Head

- 2.4 amps maximum
- Permanently lubricated
- Totally enclosed
- Single phase
- Overload protected with reset thermal
- 115 volts AC, 60 hertz

Knee

- 1.8 amps maximum
- Permanently lubricated
- Totally enclosed
- Single phase
- Overload protected with reset thermal
- 115 volts AC, 60 hertz

The hilow and head motors have manual crank capability to allow operation in the event of power failure on P8400 models without the CPR release only. The head has a release mechanism to permit flattening of this section of the sleeping surface on P8500 models and P8400 models with the CPR release only. The knee has a release mechanism to permit flattening of this section of the sleeping surface for all model beds.

All of these motors are a plug-in design to make them easily and rapidly removable from the bed in the event of motor problems. These motors are designed and made especially for the individual functions they are to perform. Standard shelf motors not designed with the proper horsepower, gear ratio, etc., are not acceptable.

Thermal Resets

Thermals are an integrated part of the motors, protecting them in the event that an overload condition occurs. They stop the motor automatically if it heats up to a certain temperature. The motor will not run again until the thermal is reset. All beds have automatic reset thermals.

WARNING:
The motor can continue operation once the automatic thermal is reset, which could cause possible injury to personnel or damage to the bed.

Motor Capacitors

Motor capacitors often become weak before they fail. A quick check to find out if they are weak is:

- Run the motor up. Depress the down button, and let off of the button. Check to see if the motor drifts after the button is released.
- Operate the motor in either direction. While the motor is running, reverse the direction quickly. Check to see if there is an unusually long delay before the motor reverses.
- Operate the motor in either direction. While the motor is running, reverse the direction quickly. Check to see if the motor continues to operate in the same direction.

If any of these conditions occur, replace the capacitor.

Integrated Air Support System

The integrated air support system is an optional feature. The integrated air support system includes the air compressor, P.C. board, pendant control, DynamicAire Sleep Surface, and functional lockouts.

The integrated air support system compressor is a self contained unit with the following specifications:

- 1.0 amps maximum
- Permanently lubricated
- Totally enclosed
- Single phase
- 115 volts AC, 60 hertz

Patient Controls

Patient operation of the various functions of this bed is accomplished by means of low voltage finger touch switches located in a convenient fixed position at both sides of the bed. These patient controls are affixed with the movable head section to give easy access as well as visual contact with the head and knee operating button, irrespective of the position of the head section elevation. These low voltage patient controls are electronically interlocked to prevent electrical damage to the motor caused by contradictory direction signaling to the motor. The hilow low voltage electrical controls are located in a position for visual contact and operation by nursing personnel, doctors, etc., attending to the patient.

Lockouts are provided to inhibit patient operation of the head, knee, and hilow features. The lockouts are located on the attendant control console at the foot end of the bed. Activation of either the head or knee lockout precludes knee section movement for contour when the head operating switch is actuated.

Head

Head section operating controls are visually identifiable to the patient by graphic symbols. The switches are separate momentary type low voltage switches identified for elevation and down travel of the head section.

Knee

The knee lift patient controls are readily visible to the patient and likewise identified by symbols. They contain a separate momentary type switch for the up and down positioning of the knees. The patient can raise the knee section to a full 45° angle or to a full flat position. The flat feature is an overriding function that can be acquired even though the bed has been positioned in automatic contour.

Hilow

The hilow controls are pictorially labeled to indicate their function, and are in immediate visual contact with the patient attendant. They contain a momentary type up or down switch.

Mattress

The pendant adjusts the firmness of the optional DynamicAire Sleep Surface. Two momentary switches allow the patient to adjust the DynamicAire Sleep Surface firmer or softer. This feature is disabled when the automatic mode is selected, or the patient controls are turned off in the attendant control console.

Control Board—Theory of Operation

The control board theory of operation is a description of the master control board assembly, which drives limit switches, siderails, attendant control console, and the Trendelenburg function.

The mattress control board theory of operation is a description of circuit controls for the pressure in both the upper and lower bladders of the DynamicAire Sleep Surface.

This information will help you understand the control boards, and act as an aid in troubleshooting problems encountered with electrical functions.

A copy of the theory of operation for the Retractable bed is available upon request to the Hill-Rom Technical Support Department. Please specify the circuit board part number when ordering.

Chapter 4
Removal, Replacement, and Adjustment Procedures

Chapter Contents

DynamicAire Sleep Surface Mattress . . . . . 4 - 5
Removal . . . . . 4 - 5
Replacement . . . . . 4 - 5
Air Pendant Control . . . . . 4 - 7
Removal . . . . . 4 - 7
Replacement . . . . . 4 - 8
Control Board Assembly (P8400 Models Only). . . . . 4 - 9
Removal . . . . . 4 - 9
Replacement . . . . . 4 - 11
Control Board Assembly (P8500 Models Only). . . . . 4 - 12
Removal . . . . . 4 - 12
Replacement . . . . . 4 - 13
Air P.C. Board . . . . . 4 - 15
Removal . . . . . 4 - 15
Replacement . . . . . 4 - 17
Solenoid Assembly . . . . . 4 - 18
Removal . . . . . 4 - 18
Replacement . . . . . 4 - 19
Air Compressor Assembly . . . . . 4 - 20
Removal . . . . . 4 - 20
Replacement . . . . . 4 - 21

4

Motor Cover . . . . . 4 - 22
Removal . . . . . 4 - 22
Replacement . . . . . 4 - 23
Head Motor . . . . . 4 - 24
Removal . . . . . 4 - 24
Replacement . . . . . 4 - 25
Head Drive Screw Assembly . . . . . 4 - 26
Removal . . . . . 4 - 26
Replacement . . . . . 4 - 27
Head Limit Switch Assembly . . . . . 4 - 28
Removal . . . . . 4 - 28
Replacement . . . . . 4 - 29
Head Drive Screw Assembly—Slippage Correction
(8400 and 8500 Models With CPR Only) . . . . . 4 - 30
Removal . . . . . 4 - 30
Replacement . . . . . 4 - 31
Head Drive Screw Assembly—Roller Bearing
(8400 and 8500 Models With CPR Only) . . . . . 4 - 32
Removal . . . . . 4 - 32
Replacement . . . . . 4 - 33
Knee Motor . . . . . 4 - 34
Removal . . . . . 4 - 34
Replacement . . . . . 4 - 35
Knee Drive Screw Assembly . . . . . 4 - 36
Removal . . . . . 4 - 36
Replacement . . . . . 4 - 39
Knee Limit Switch . . . . . 4 - 40
Removal . . . . . 4 - 40
Replacement . . . . . 4 - 41
Hilow Motor . . . . . 4 - 42
Removal . . . . . 4 - 42

4

Replacement . . . . . 4 - 43
Hilow Drive Screw Assembly . . . . . 4 - 44
Removal . . . . . 4 - 44
Replacement . . . . . 4 - 45
Hilow Limit Switch (P8400 Models Only). . . . . 4 - 46
Removal . . . . . 4 - 46
Replacement . . . . . 4 - 47
Hilow Limit Switch (P8500 Models Only). . . . . 4 - 48
Removal . . . . . 4 - 48
Replacement . . . . . 4 - 50
Hilow Drive Screw Assembly—Slippage Correction . . . . . 4 - 51
Removal . . . . . 4 - 51
Replacement . . . . . 4 - 52
Hilow Drive Screw Assembly—Thrust Bearing . . . . . 4 - 53
Removal . . . . . 4 - 53
Replacement . . . . . 4 - 53
Trendelenburg Limit Switch (P8500 Models Only) . . . . . 4 - 54
Removal . . . . . 4 - 54
Replacement . . . . . 4 - 56
Trendelenburg Engage/Disengage Switches (P8500 Models Only). . . . . 4 - 57
Removal . . . . . 4 - 57
Reverse Trendelenburg Limit Switch (P8500 Models Only) . . . . . 4 - 61
Removal . . . . . 4 - 61
Replacement . . . . . 4 - 63
Reverse Trendelenburg Engage/Disengage Switches
(P8500 Models Only) . . . . . 4 - 64
Removal . . . . . 4 - 64
Replacement . . . . . 4 - 65
Brake Cam . . . . . 4 - 67
Removal . . . . . 4 - 67
Replacement . . . . . 4 - 68

4

Brake Block Mechanism . . . . . 4 - 69
Removal . . . . . 4 - 69
Replacement . . . . . 4 - 70
Brake Light Switch (P8500 Models Only) . . . . . 4 - 71
Removal . . . . . 4 - 71
Replacement . . . . . 4 - 72
Attendant Control Panel . . . . . 4 - 73
Removal . . . . . 4 - 73
Replacement . . . . . 4 - 73
SideCom Communication System Entertainment Control Assembly . . . . . 4 - 74
Removal . . . . . 4 - 74
Replacement . . . . . 4 - 76
Siderail Nurse Call, Lighting, or Bed Control Switch Assembly . . . . . 4 - 77
Removal . . . . . 4 - 77
Replacement.. . . . . 4 - 78
Siderail LED Indicator . . . . . 4 - 79
Replacement . . . . . 4 - 79
Siderail . . . . . 4 - 80
Removal . . . . . 4 - 80
Replacement . . . . . 4 - 81
Knee Limit Switch Adjustment . . . . . 4 - 82
Head Limit Switch Adjustment . . . . . 4 - 83
Hilow Limit Switch Adjustment . . . . . 4 - 85
Hilow Up Limit Switch Adjustment (P8500 Models Only) . . . . . 4 - 86
Hilow Down Limit Switch Adjustment (P8500 Models Only) . . . . . 4 - 88
Trendelenburg Limit Switch Adjustment (P8500 Models Only) . . . . . 4 - 90
Reverse Trendelenburg Limit Switch Adjustment
(P8500 Models Only) . . . . . 4 - 91
Caster Adjustment . . . . . 4 - 92
Siderails—Hard To Rotate Up Or Down . . . . . 4 - 94
Siderails—Frozen . . . . . 4 - 95

4

4.1 DynamicAire Sleep Surface Mattress

Tools required: None

Removal

1. Lift the foot section (A) to access the air hose couplings (B) (see figure 4-1 on page 4-5).

Figure 4-1. Dynamic Sleep Surface Mattress Replacement

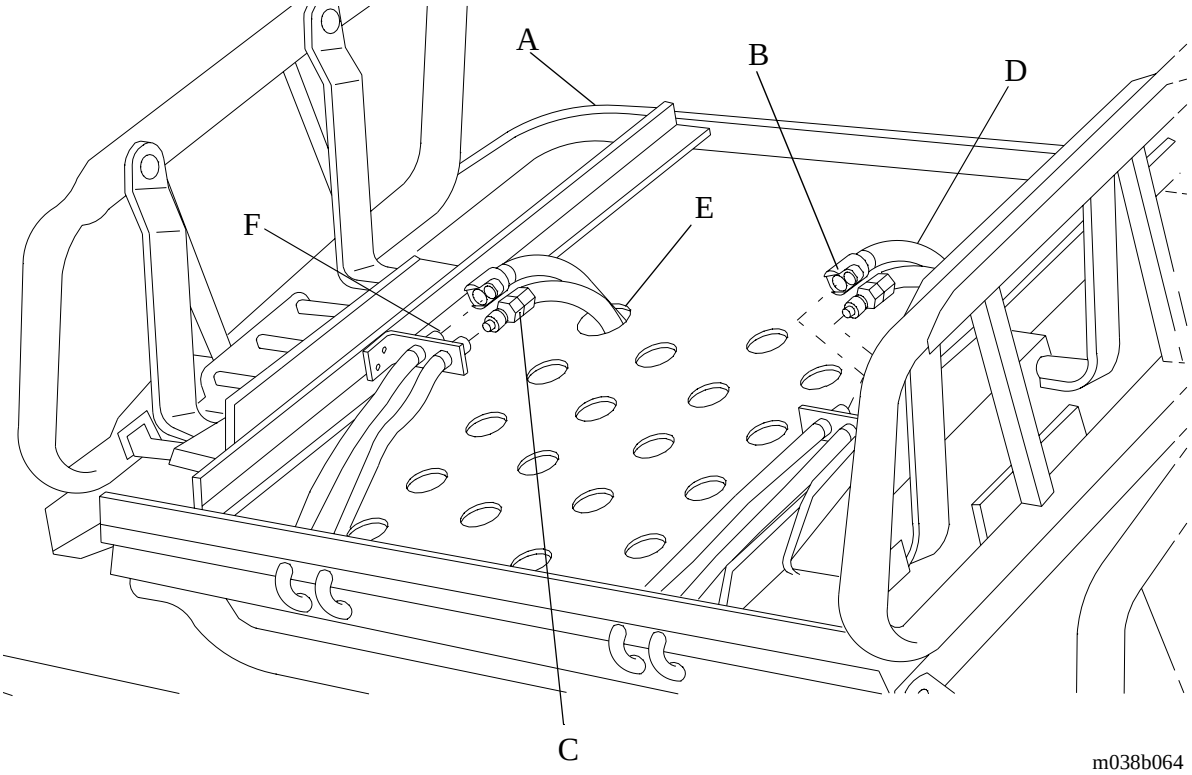

2. Depress the spring loaded coupling release (C) to disconnect the four mattress air hoses (D) from the bed.

3. Disconnect the plastic buckle holding the mattress in place.

4. Remove the air mattress.

Replacement

1. Replace the air mattress and insert the two sets of air hoses (D) through large holes (E) in the foot section (A) or through the fabric surface on non-hard pan beds.

2. Connect the plastic buckle to hold the mattress in place.
3. Connect the air hoses by pushing the mattress coupling onto the mating bed coupling (F).

4.2 Air Pendant Control

Tools required: None

Removal

1. Raise the bed (hilow) and the head section to the highest position. Unplug the bed from its power source.

2. Remove the wire tie (A) holding the pendant control cable to the torque tube or siderail slide rods (see figure 4-2 on page 4-7).

Figure 4-2. Air Pendant Control Replacement

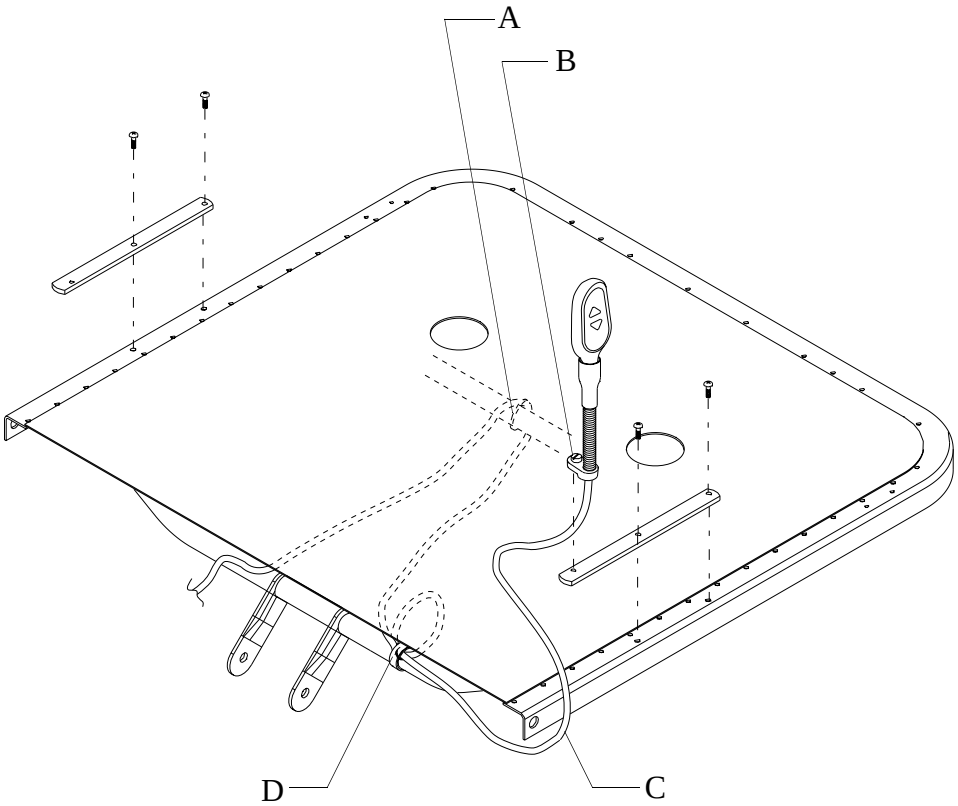

m038b096

3. Remove the velcro strap (D) securing the pendant control cable (C).

4. Disconnect the pendant control cable (C) from the manifold control box.

5. Disconnect the thumbscrew (B) from the mounting receptacle.

Replacement

1. Install the new pendant control in reverse order of the removal procedure.

NOTE:
Be sure to leave enough slack cable to avoid undue stress on the cable as the bed is raised and lowered.

2. Ensure all pendant functions operate properly.

4.3 Control Board Assembly (P8400 Models Only)

Tools required: T25 torx head screwdriver, Phillips head screwdriver, Needle nose pliers

Removal

SHOCK HAZARD:
Unplug the bed from its power source before removing the cover. An electrical shock hazard exists.

CAUTION:
Wear an appropriate static strap when working with electronics to prevent component damage.

1. Remove the footboard control panel from the bed.
2. Remove the screw securing the dust cover (A) to the bed frame.
3. Remove the dust cover (A) from the foot end of the bed (see figure 4-3 on page 4-10).

4

Figure 4-3. Control Board Assembly—P/N 45701 or 45701-01

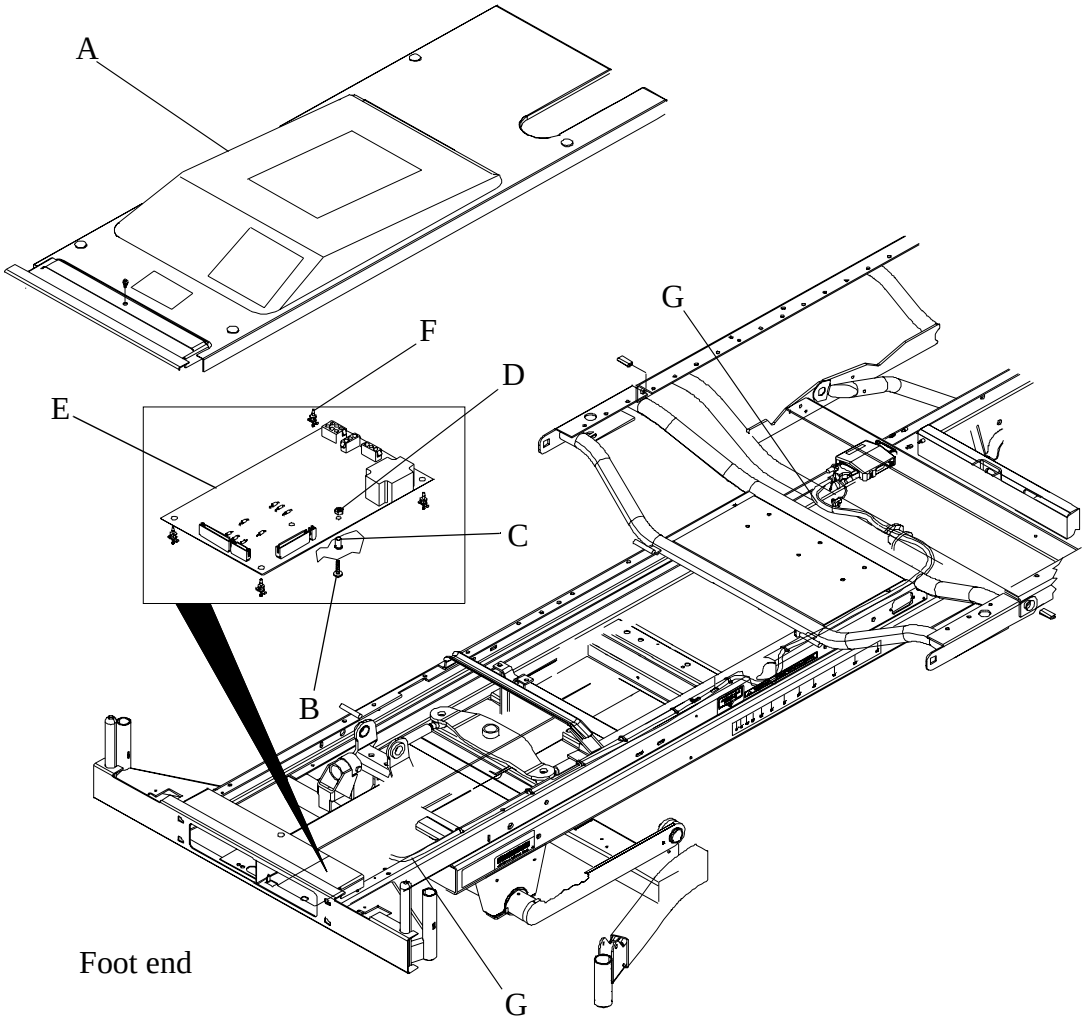

4. Remove all connectors going to the power supply.
5. Disconnect the testport cable (G) from the power supply board.
6. Remove the screw (B), standoff (C), and hex nut (D) from power supply board (E) to the power supply box.
7. Compress the board supports (F) with the needle nose pliers, and remove the power supply board.

Replacement

1. Reverse the removal procedure for replacement of the control board assembly.
2. Ensure all connections are securely fastened to the power supply board.
3. Check all bed functions to ensure proper installation of the power supply board.

4.4 Control Board Assembly (P8500 Models Only)

Tools required:	T25 torx head screwdriver Phillips head screwdriver	Needle nose pliers

Removal

SHOCK HAZARD:
Unplug the bed from its power source before removing the cover. An electrical shock hazard exists.

CAUTION:
Wear an appropriate static strap when working with electronics to prevent component damage.

1. Remove the footboard control panel from the bed.
2. Remove the screw securing the dust cover (A) to the bed frame.
3. Remove the dust cover (A) from the foot end of the bed (see figure 4-4 on page 4-13).

Figure 4-4. Control Board Assembly - P/N 45789

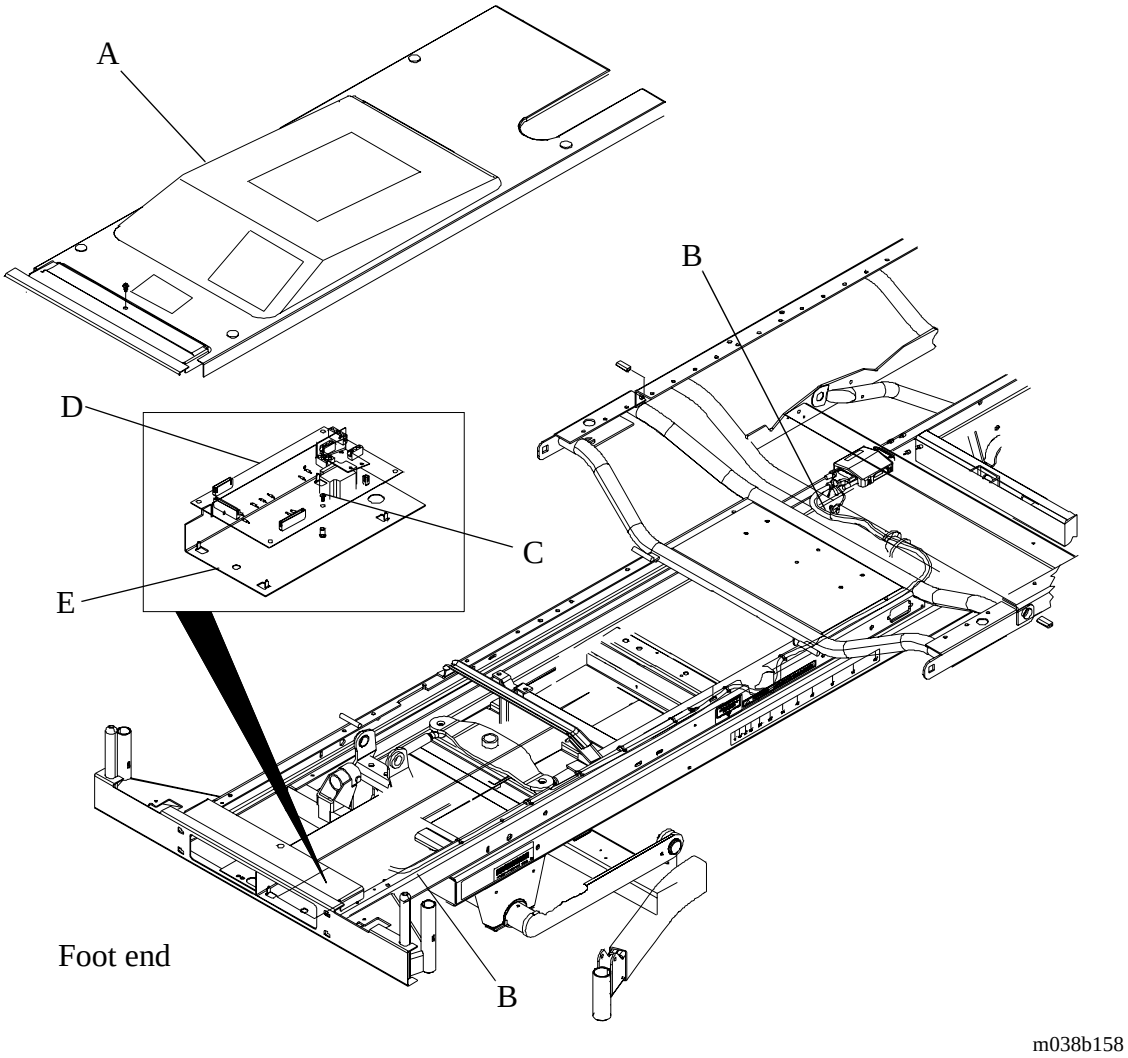

4. Remove all connectors going to the power supply.
5. Disconnect the testport cable (B) from the power supply board (D).
6. Remove the brass screw (C) from power supply board (D) to the power supply box (E).

Replacement

1. Reverse the removal procedure for replacement of the control board assembly.

2. Ensure all connections are securely fastened to the power supply board.
3. Check all bed functions to ensure proper installation of the power supply board.

4.5 Air P.C. Board

Tools required: Screwdriver

Removal

1. Raise the bed (hilow) to the high position. Unplug the manifold control box power cord from the AC outlet.

2. Disconnect the air hoses (A) that lead from the DynamicAire Sleep Surface to the air hose coupling brackets (C) under the foot section (B) of the sleep surface (see figure 4-5 on page 4-15).

Figure 4-5. Air P.C. Board Replacement

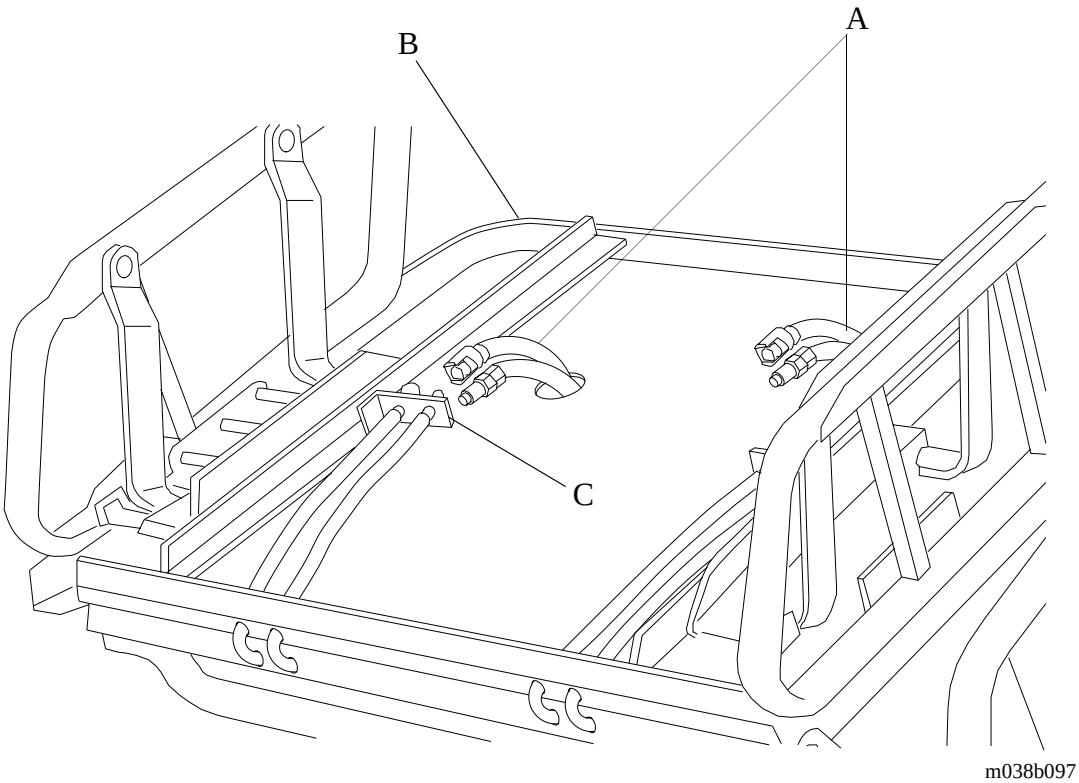

3. Remove the DynamicAire Sleep Surface mattress from the bed

4. If the bed has a hard pan sleep surface, remove the seat section hard pan. If the bed has a spring sleep surface, it is not necessary to remove the spring sleep surface over the seat section.

5. Remove the manifold control box lid. Detach the manifold control box (A) from either the bed frame (C) or the mounting brackets (see figure 4-6 on page 4-16).

Figure 4-6. Manifold Control Box Position

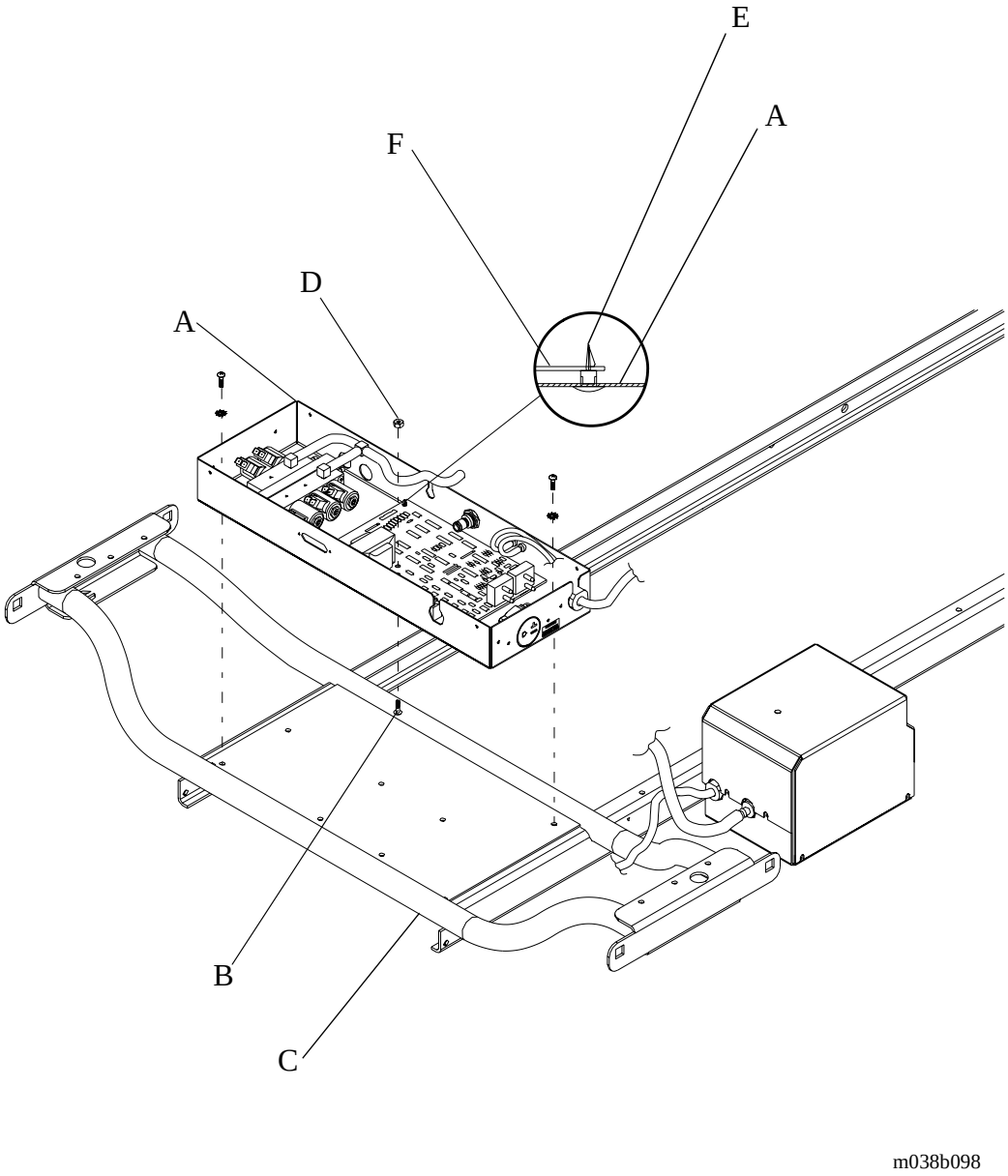

6. Detach the connectors and hoses from the P.C. board (F).

7. Remove the one screw (B) and nut (D) near the center of the board. Compress the four standoffs (E), and lift the P.C. board off of the standoffs.

8. Lift the P.C. board (F) from the manifold control box (A).

Replacement

1. Follow the removal procedures in reverse order for replacement of the air P.C. board.

2. Ensure the bed air surface and all of its functions work properly.

4.6 Solenoid Assembly

Tools required: Phillips head screwdriver
9/16" and 5/8" wrenches
Torque wrench

Removal

1. Follow steps 1 through 4 of the section “Air P.C. Board” on page 4-15.
2. Disconnect the wiring going to the defective solenoid.
3. Remove the nut (A) on the end of the solenoid (B) (see figure 4-7 on page 4-18). Detach the solenoid from the manifold valve shaft.

Figure 4-7. Solenoid Replacement

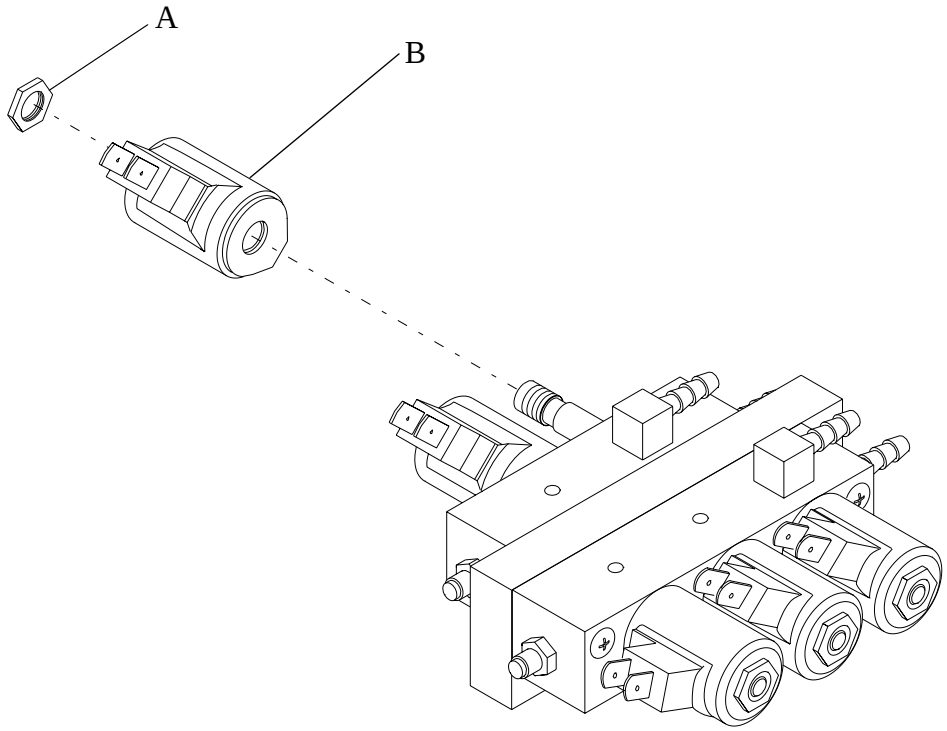

m038b099

4. Assemble the new solenoid, and tighten the nut to 15 to 25 in-lb (20.34 to 34 N·m) torque.

NOTE:
Do not over-tighten the nut. This will cause the manifold valve to operate improperly.

Replacement

1. Follow the removal procedures in reverse order for replacement of the solenoid assembly.

2. Ensure the bed air surface and all of its functions work properly.

4.7 Air Compressor Assembly

Tools required: Screwdriver

Removal

1. Raise the bed (hilow) to the high position. Unplug the bed from its power source.

2. Remove the four screws (A) securing the compressor box cover (E) (see figure 4-8 on page 4-20).

Figure 4-8. Air Compressor Parts Location

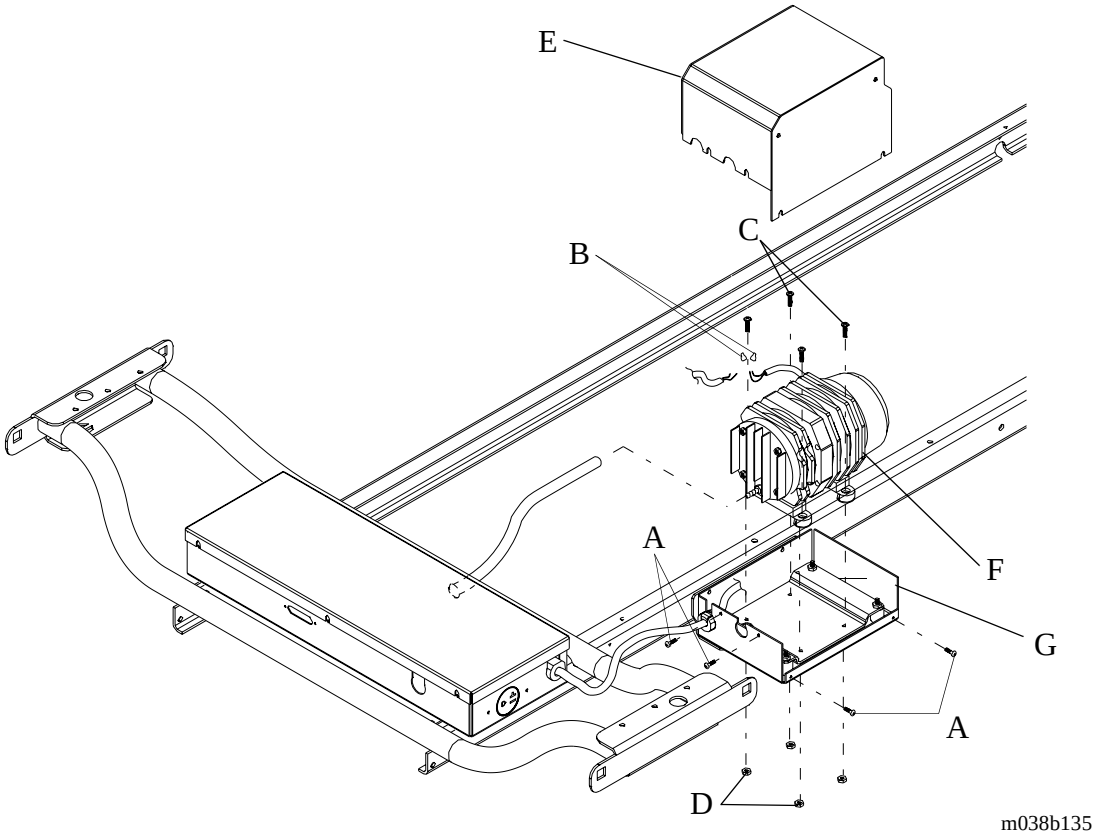

3. Remove the two wire nuts (B) connecting the air compressor (F) to the air compressor connector cable assembly.

4. Remove the four screws (C) and (D) fastening the air compressor (F) to the compressor box (G). Remove the air compressor.

5. Replace the air compressor.

Replacement

1. Follow the removal procedures in reverse order for replacement of the air compressor assembly.

2. Ensure the bed air surface and all of its functions work properly.

4.8 Motor Cover

Tools required: T25 torx head screwdriver

Removal

1. Raise the knee section to its highest point. Unplug the bed from its power source. If no power is available, see the section “Manual Operation of Bed (When Electric Power is Not Available)” on page 1-22.

2. Remove the foot end panel from the foot end panel mounting posts.

3. Fold the foot section up and back toward the head end of the bed. Tie the foot section so it cannot fall.

4. Remove screw (A), which holds the cover (see figure 4-9 on page 4-22).

Figure 4-9. Motor Cover

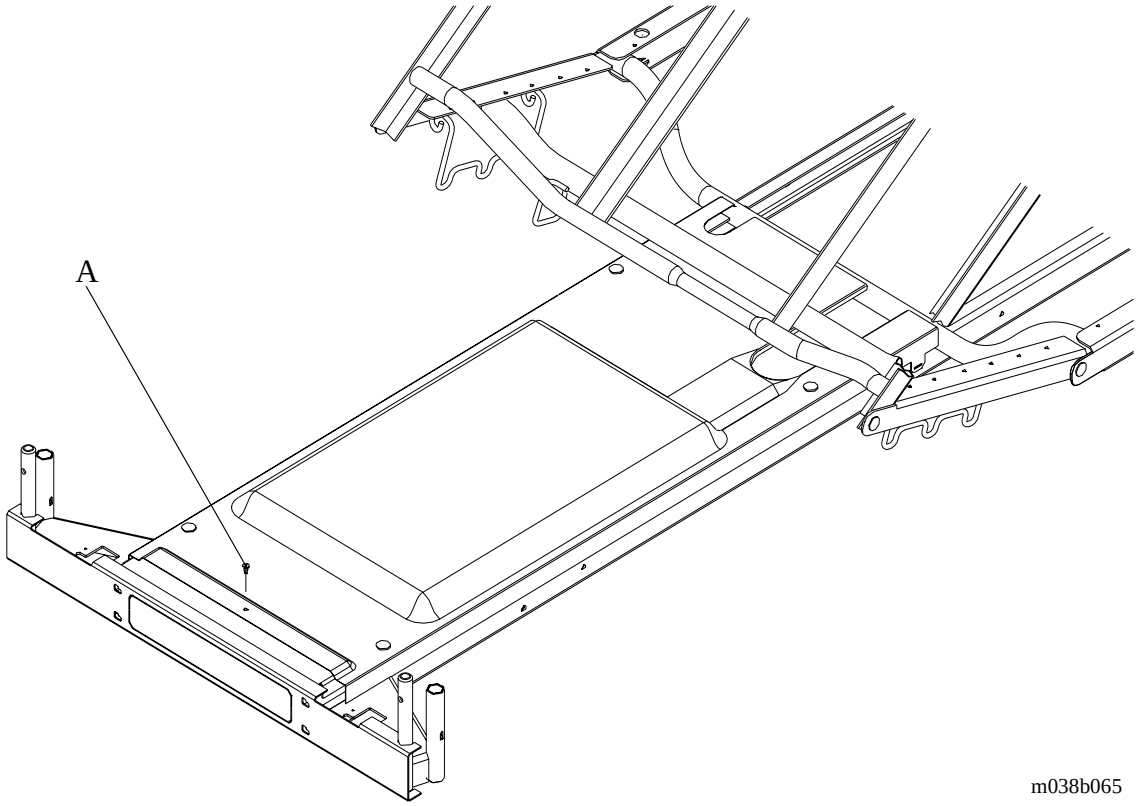

5. Lift the cover up near the foot end, and pull it out.

Replacement

1. Assemble the motor cover in reverse order of the removal procedure.

2. Ensure the slots on both sides of the motor cover match with the welded pegs on the bed frame near the seat section.

WARNING:
Ensure the gasket is installed on the motor cover before assembly. Moisture can possibly get under the motor cover if the gasket is not installed. This can cause component failure and possible self activation of the bed. See the section “Safety Tips” on page 1-27 for additional information.

CAUTION:
Do not lower the foot section from the folded up position with the knee section down and the motor cover removed. Severe damage to the bed can occur.

4.9 Head Motor

Tools required: 1/2" wrench
1/2" socket and ratchet

Removal

1. Raise the bed (hilow) to the high position. If no power is available, see the section “Manual Operation of Bed (When Electric Power is Not Available)” on page 1-22.

2. Unplug the bed from its power source.

3. Lower the head section to the flat position.

4. Follow steps 1 through 5 of the section “Motor Cover” on page 4-22.

5. Disconnect the head motor power cable (C) (see figure 4-10 on page 4-24).

Figure 4-10. Head Motor Replacement

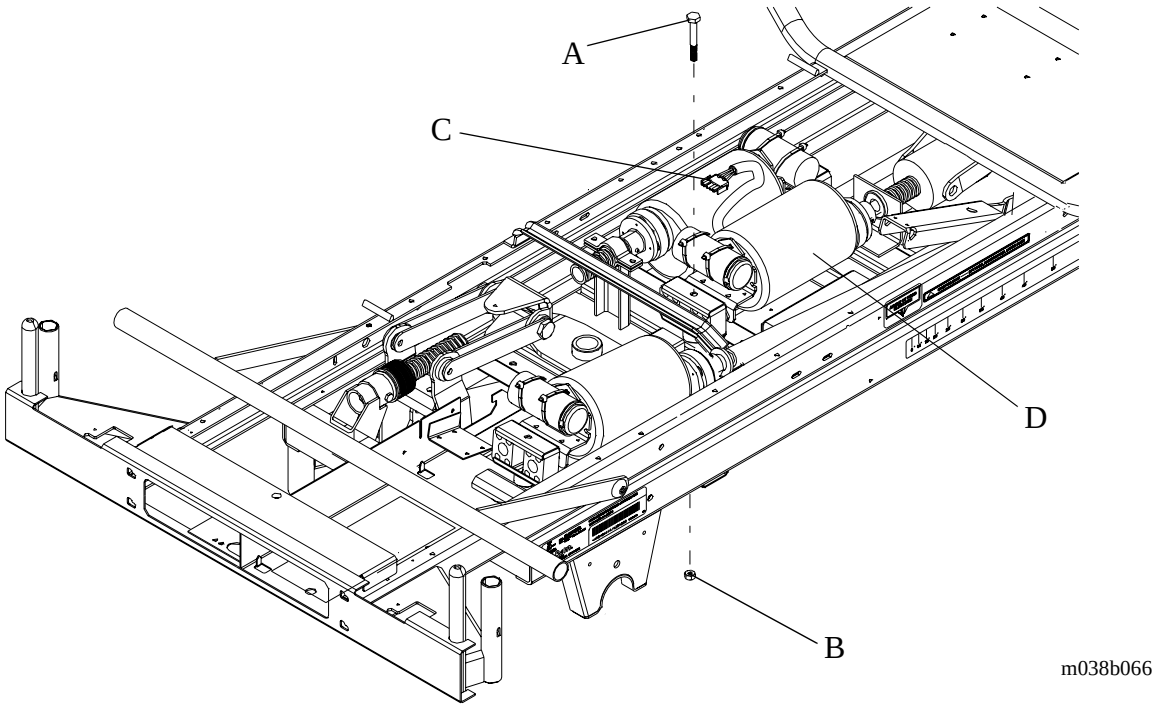

6. Remove the bolt (A) and nut (B) connecting the head motor (D) to the bed.

7. Slide the head motor (D) toward the foot end of the bed until the shaft disengages from the coupling. Remove the head motor from the bed.

Replacement

1. Reverse the removal procedure to assemble the replacement head motor.
2. Replace the motor cover.
3. Check to ensure that the head motor functions properly.

4.10 Head Drive Screw Assembly

Tools required: 3/8" wrench
1/2" wrench
1/2" socket and rachet
11/16" wrench

Removal

1. Follow steps 1 through 7 of the section “Head Motor” on page 4-24.

2. Unplug the bed from its power source.

3. Remove the hardware fastening the connecting arms (A) to the head section (see figure 4-11 on page 4-26).

NOTE:
P8500 bed model is shown below.

Figure 4-11. Head Drive Screw Assembly Replacement

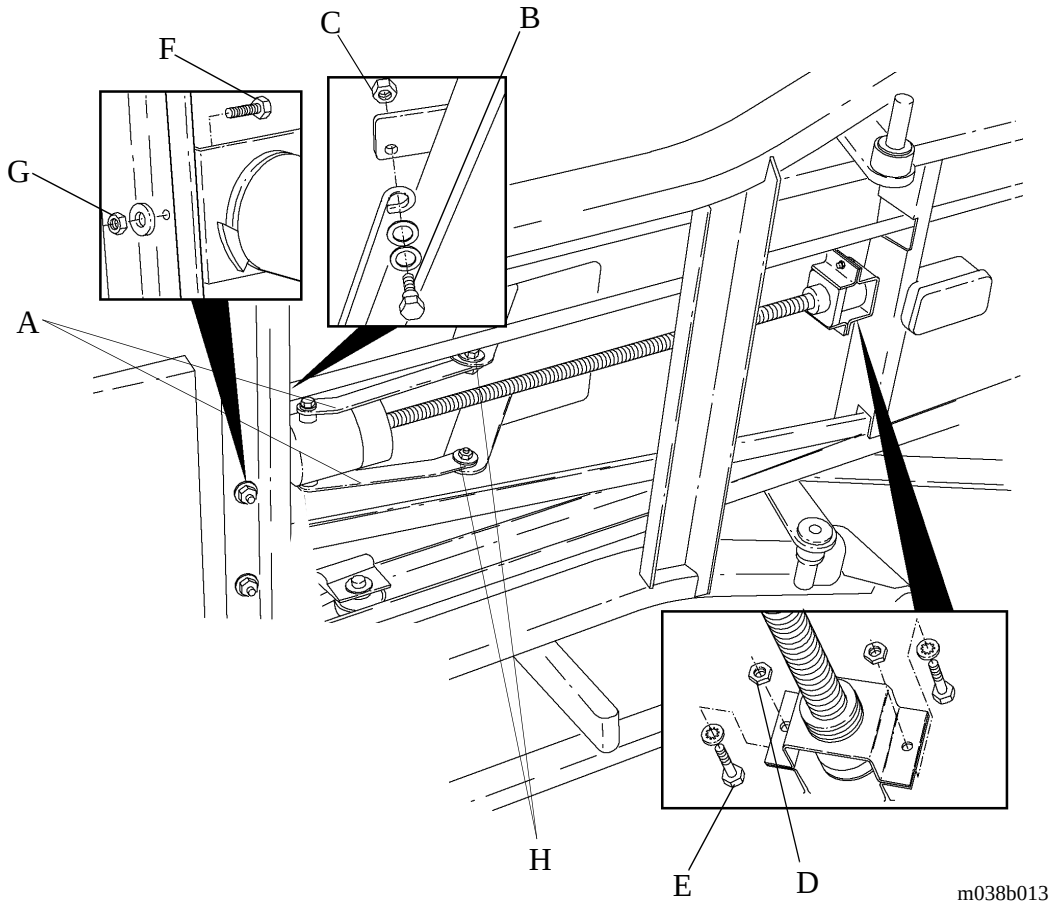

NOTE:
Be sure to note the orientation of the hardware just removed. You will need to know this for assembly.

4. Remove the bolt (B) and nut (C) that hold the limit control rod.
5. Remove the two bolts (E) and two nuts (D) that attach the head end of the head drive screw assembly to the bed.
6. Remove the bolt (F) and nut (G) that attach the foot end of the head drive screw assembly to the bed.
7. Remove hardware (H) from P8400 and P8500 models.
8. Remove the head drive screw assembly from the bed.

Replacement

1. Replace the head drive screw assembly by following the removal procedures in reverse order.
2. Check to ensure that the head drive screw assembly functions properly.

4.11 Head Limit Switch Assembly

Tools required: Phillips head screwdriver
1/4" nut driver

Removal

1. Follow steps 2 through 5 of the section “Motor Cover” on page 4-22.
2. Run the head section up approximately 15°.
3. Unplug the bed from its power source.
4. Remove the screw (A) in the cam plate (see figure 4-12 on page 4-28).

Figure 4-12. Head Limit Switch Replacement

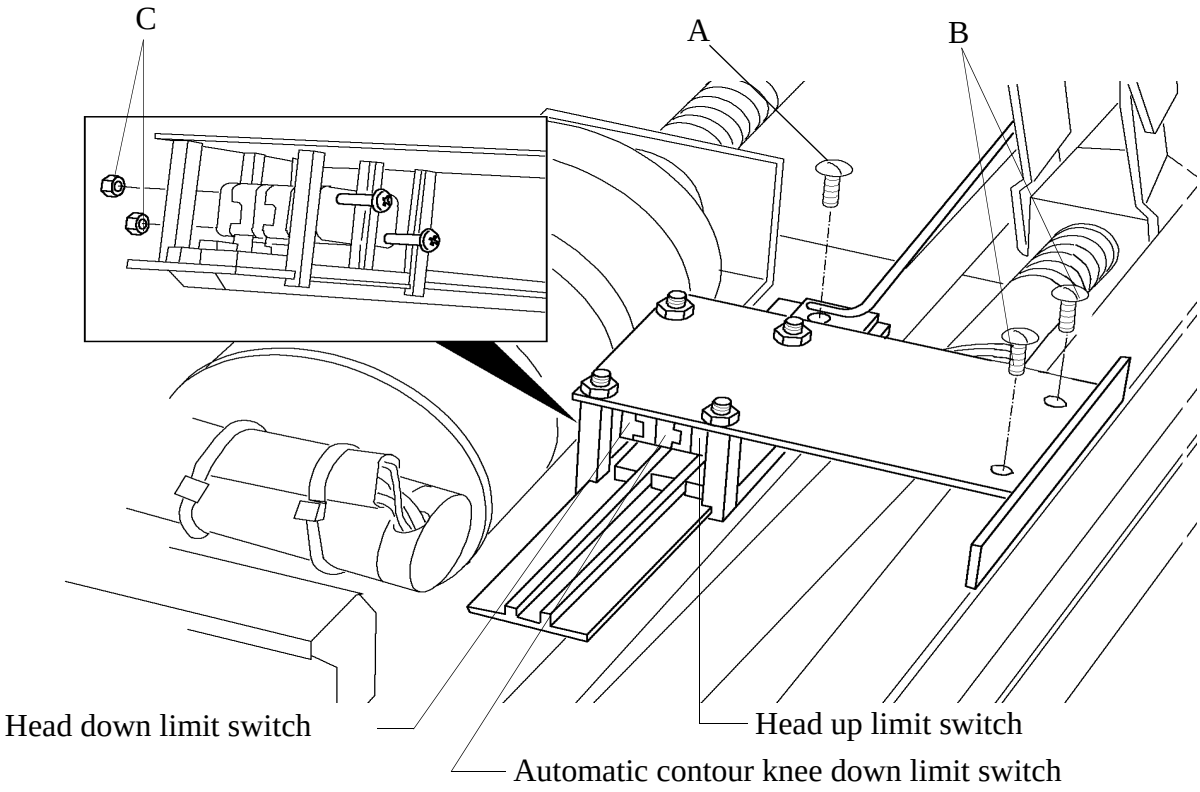

5. Remove the two screws (B).
6. Remove the two nuts (C) at the end of the head limit switch assembly. Remove the two screws enough to allow the inoperative switch to be removed.

7. Remove the wires from the inoperative switch, and attach them to the replacement switch.

Replacement

1. Reverse the removal procedures to replace the head limit switch assembly.

2. Check to see if the head section functions properly. Adjustment of the head limit switch package may be necessary. See “Head Limit Switch Adjustment” on page 4-83.

4.12 Head Drive Screw Assembly—Slippage Correction (8400 and 8500 Models With CPR Only)

Tools required: Punch
Hammer

Removal

1. Follow steps 1 through 7 of the section “Head Drive Screw Assembly” on page 4-26.

2. Remove the roll pin (A) from the head end of the head drive screw assembly (see figure 4-13 on page 4-30).

If an excessive amount of grease accumulates on the head drive screw brake assembly, the head section of the bed can slip down when the head section is elevated. Follow these instructions to correct the slippage problem.

Figure 4-13. Head Drive Screw Assembly

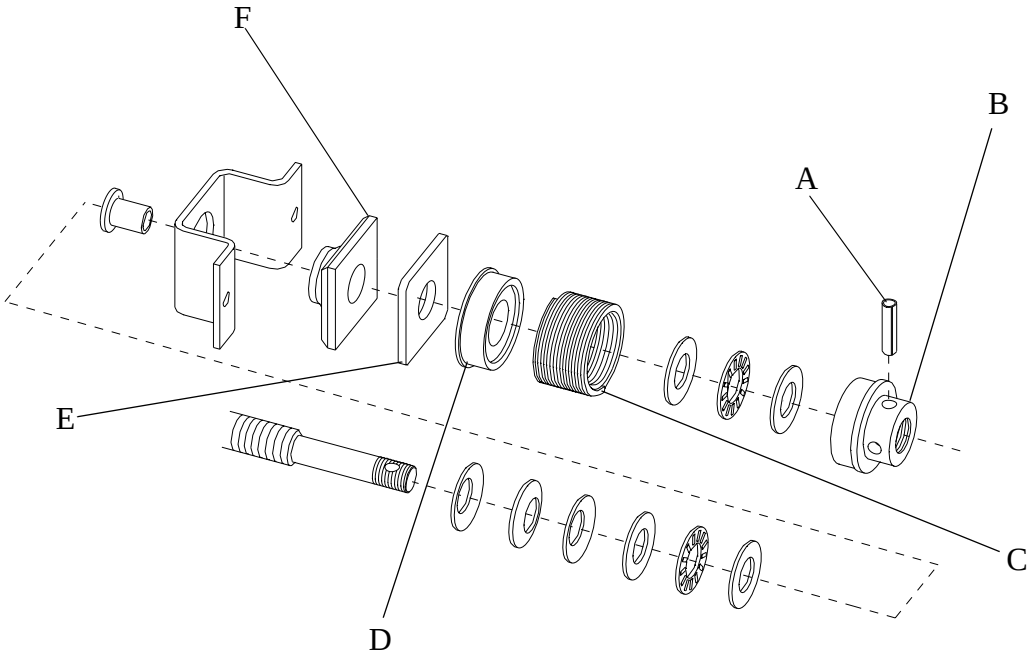

m038b105

3. Remove the fixed brake block (B), spring (C), floating brake drum (D), bronze washer (E), and the bearing end (F).

NOTE:
Note the orientation of the parts being removed from the head drive screw assembly. This will aid you during assembly.

4. Thoroughly clean the grease and oil from the spring (C), bronze washer (E), bearing end (F), and the surfaces of the fixed brake block (B) and floating brake drum (D).

Replacement

1. Reverse the removal procedures for replacement of the head drive screw assembly.

2. Check to see if the head drive screw assembly functions properly.

4.13 Head Drive Screw Assembly—Roller Bearing (8400 and 8500 Models With CPR Only)

Tools required: External retaining ring pliers

Removal

1. Follow steps 1 through 7 of the section “Head Drive Screw Assembly” on page 4-26.
2. Determine which bearing is inoperative, either the head end or the foot end.
3. Remove all of the hardware on the end of the inoperative bearing (see figure 4-14 on page 4-32).

Figure 4-14. Head Drive Screw Assembly

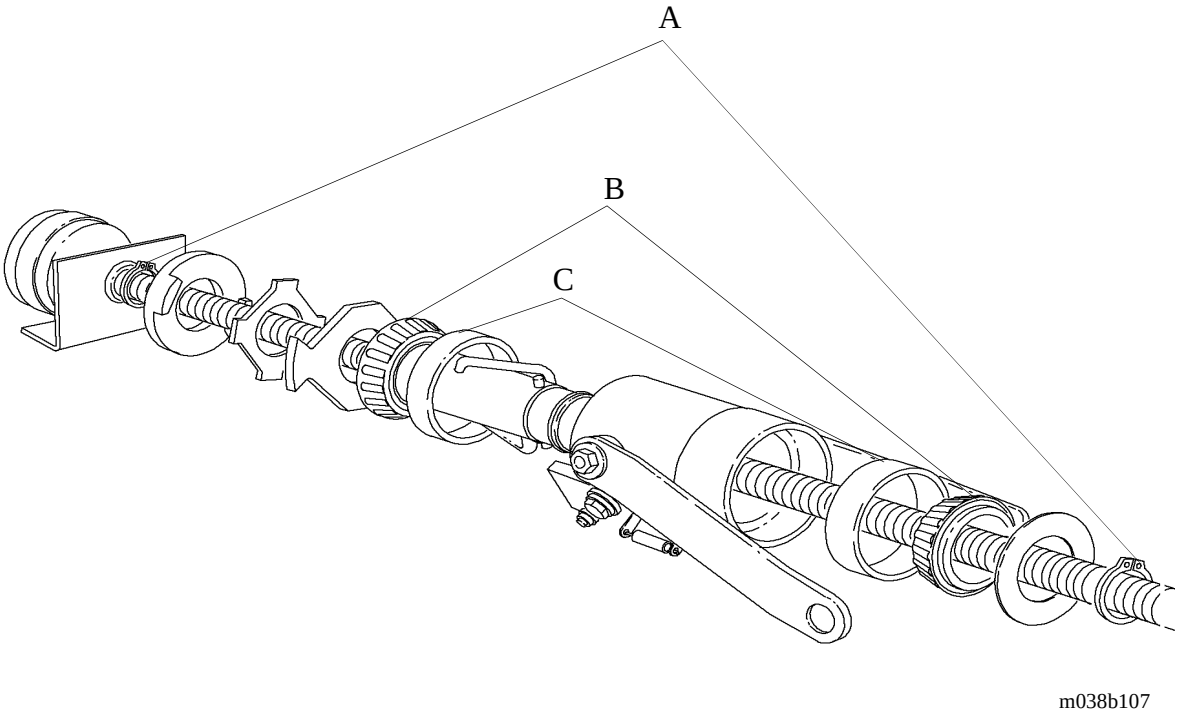

4. Remove the large retaining ring (A), and slide the nut assembly apart.
5. Remove the bearing (B) and race (C). Replace the inoperative parts with the replacement parts.

NOTE:
Do not remove the drive nut from the drive screw.

Replacement

1. Reverse the removal procedures for replacement of the head drive screw assembly.

2. Check to see if the head drive screw assembly functions properly.

4.14 Knee Motor

Tools required: 1/2" wrench
1/2" socket and ratchet

Removal

1. Lower the head section to the flat position. If no power is available, see the section “Manual Operation of Bed (When Electric Power is Not Available)” on page 1-22.

2. Follow steps 1 through 5 of the section “Motor Cover” on page 4-22.

3. Unplug the bed from its power source.

4. Disconnect the knee motor power cable from the circuit board.

5. Remove bolt (A) and nut (B) from the knee motor (see figure 4-15 on page 4-34).

4

Figure 4-15. Knee Motor

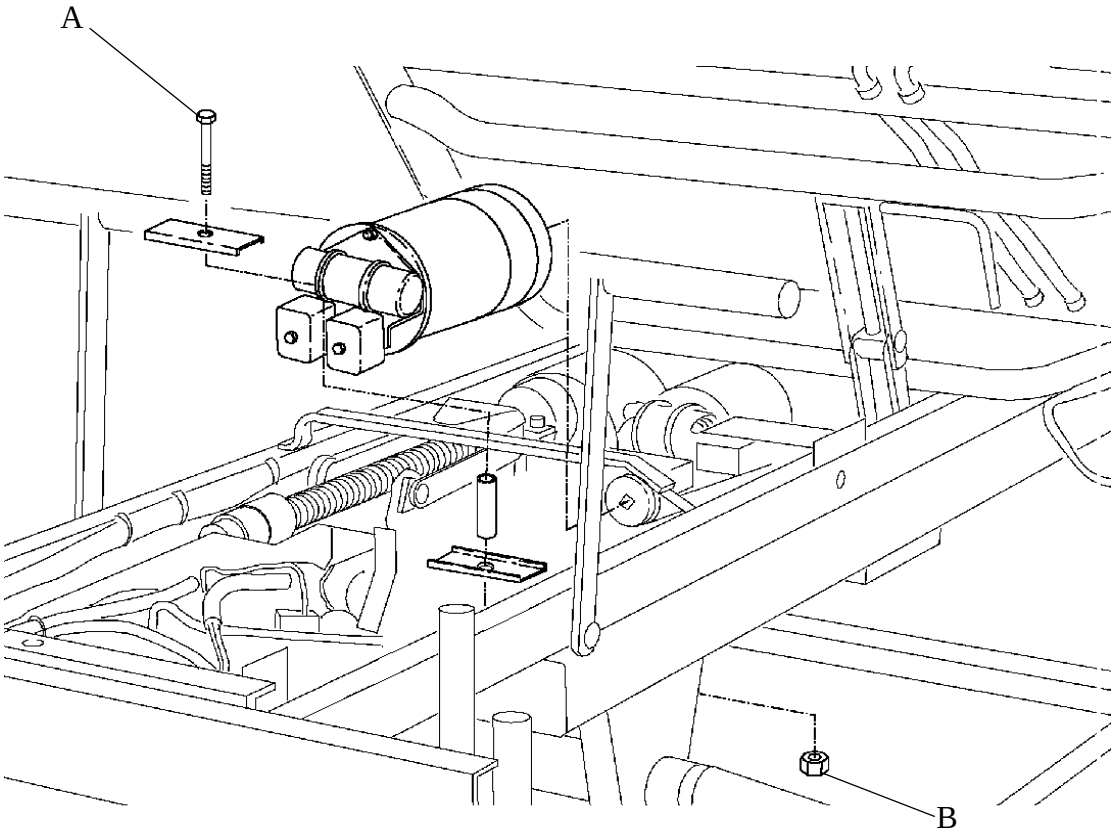

m038b108

6. Slide the motor assembly towards the foot end of the bed until the shaft disengages from the coupling.

7. Remove the knee motor from the bed.

Replacement

1. Reverse the removal procedure to assemble the replacement knee motor.

2. Replace the motor cover.

3. Check to ensure that the knee motor functions properly.

4.15 Knee Drive Screw Assembly

Tools required: Phillips head screwdriver
1/2" socket and ratchet

Removal

1. Follow steps 1 through 7 from the section “Knee Motor” on page 4-34.

2. Fold the foot section up and back toward the head end of the bed.

WARNING:
Tie the foot section so it cannot fall. Failure to do so could result in personal injury or equipment damage.

3. Remove the two screws (A) that hold the knee and head limit control rods to the white cam plates (see figure 4-16 on page 4-36).

Figure 4-16. Knee Drive Screw Assembly Replacement

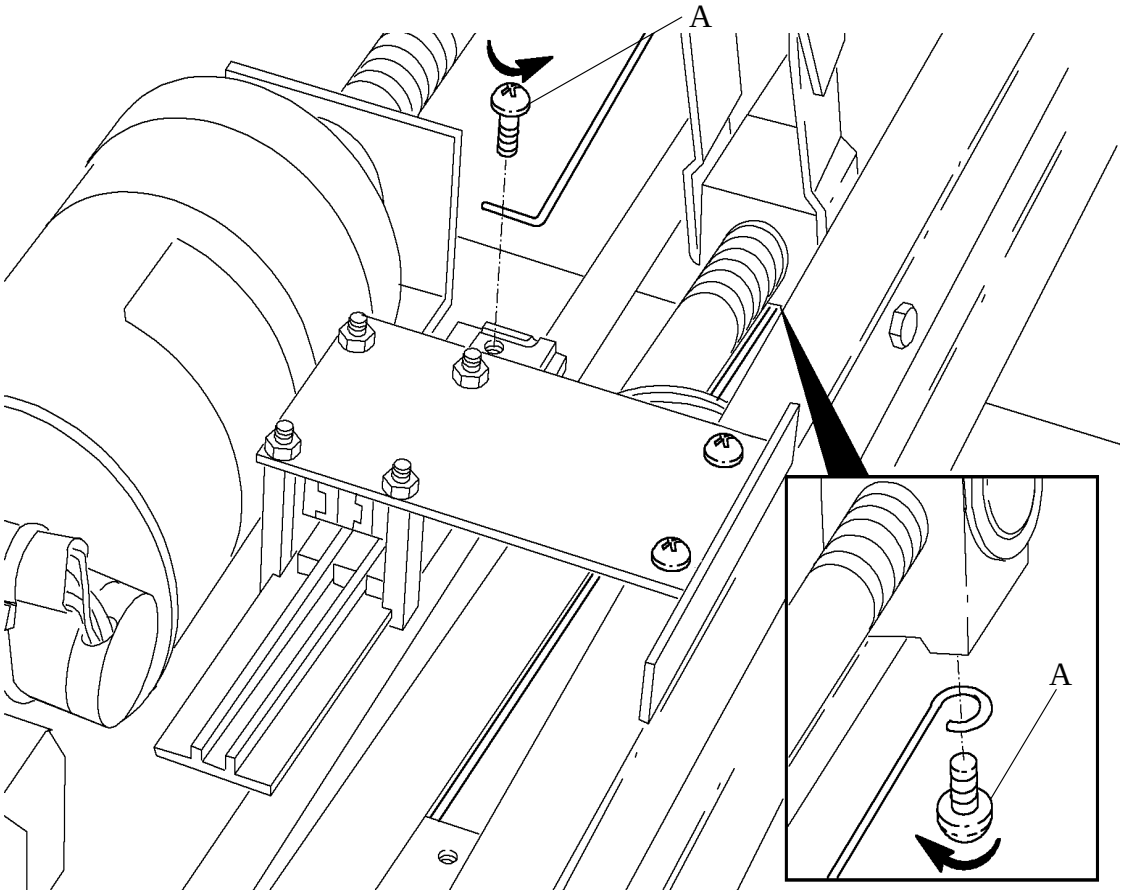

4. Remove the handle, two screws (B), and the spring holding the knee lift arms to the knee section (see figure 4-17 on page 4-37).

Figure 4-17. Control Rod Location

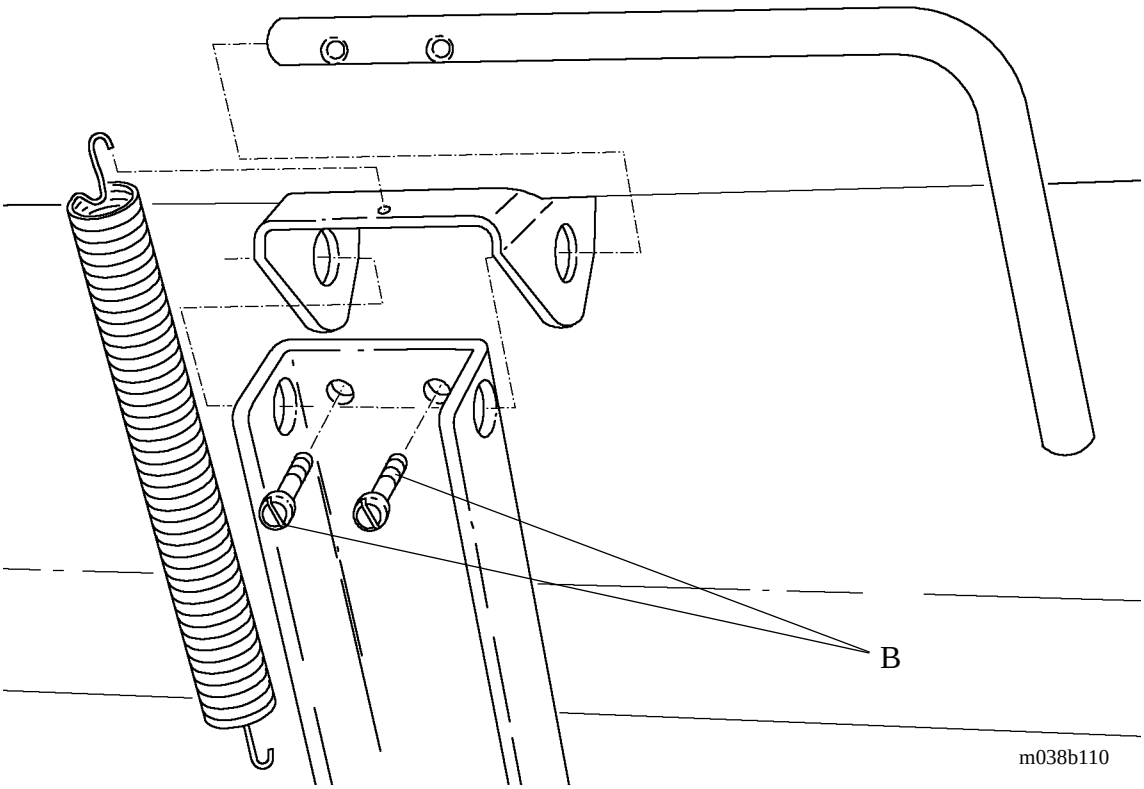

5. The head limit assembly will be assembled to the bed by either two screws or two nuts. Remove the two screws (C) (see figure 4-18 on page 4-38).

Figure 4-18. Limit Switch Screw Locations

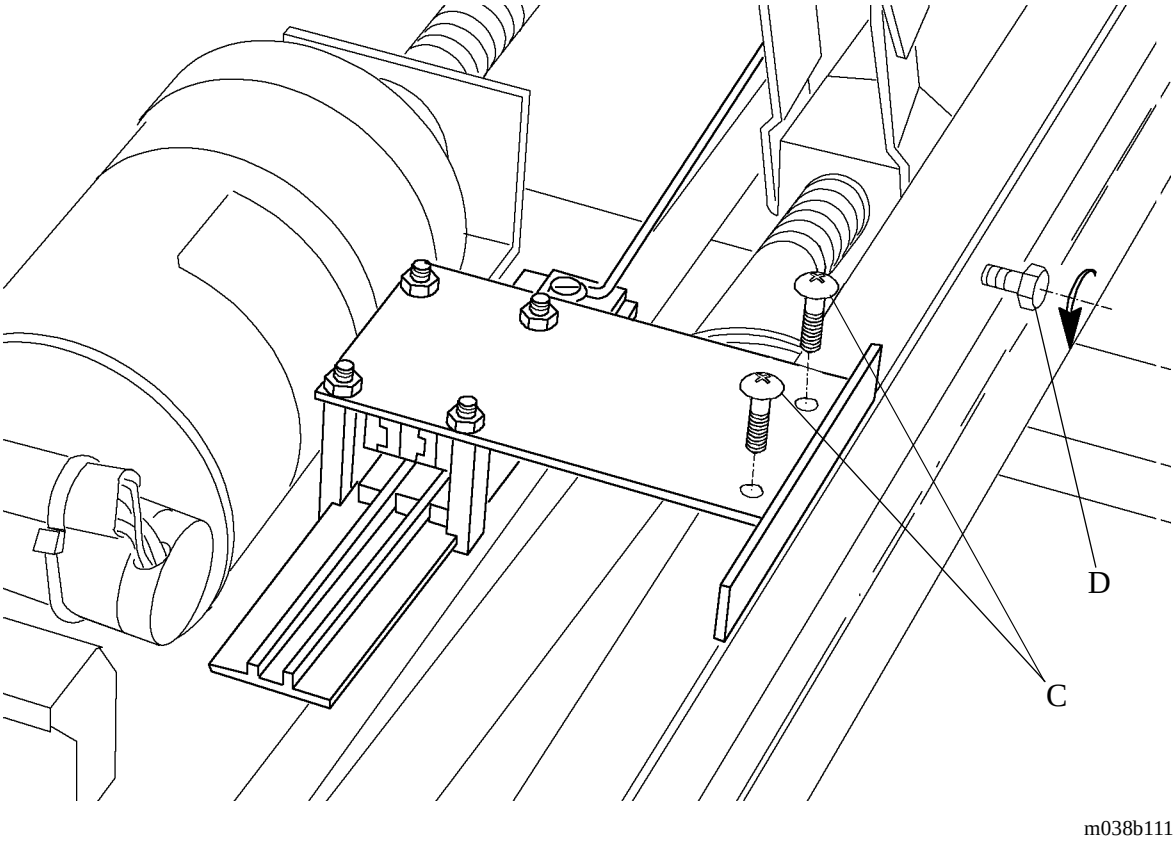

4

6. Remove the bolt (D) and nut that connect the knee support guide to the bed.

7. At the head end of the knee drive screw assembly, you will find a slot large enough for a roll pin to go through. Manually turn the knee drive screw assembly (E) until the roll pin (F) lines up with the slot (see figure 4-19 on page 4-39).

Figure 4-19. Roll Pin Location

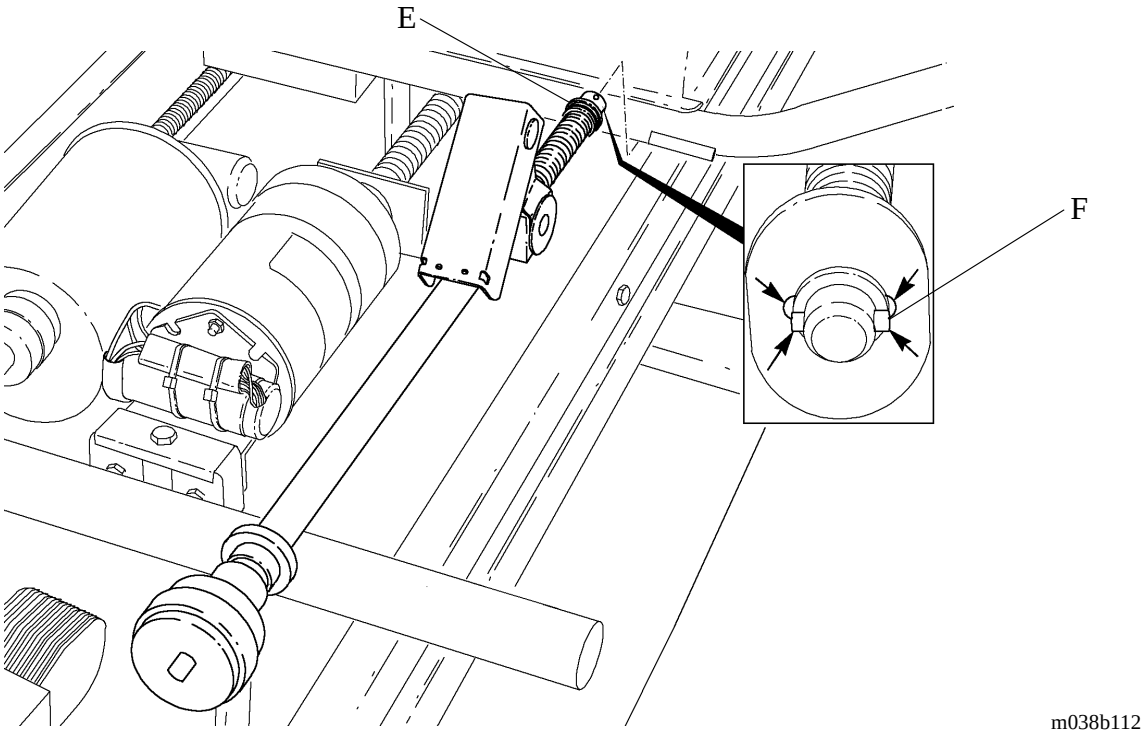

8. Slide the bushing towards the head end of the bed, and remove it.
9. Slide the knee drive screw assembly towards the foot end of the bed until the oilite bushing at the foot end mount disengages its mounting hole.
10. Pull the knee drive screw assembly to the side at the foot end mount. Remove the knee drive screw assembly through the slot, and lift it out.

Replacement

1. Reverse the removal procedure to replace the knee drive screw assembly.
2. Check to see if the knee drive screw assembly functions properly.

4.16 Knee Limit Switch

Tools required: Phillips head screwdriver
1/4" nut driver

Removal

1. Follow steps 2 through 5 of the section “Motor Cover” on page 4-22.
2. Raise the knee section approximately half way up.
3. Remove screw (A) from the cam plate (see figure 4-20 on page 4-40).

Figure 4-20. Knee Limit Switch

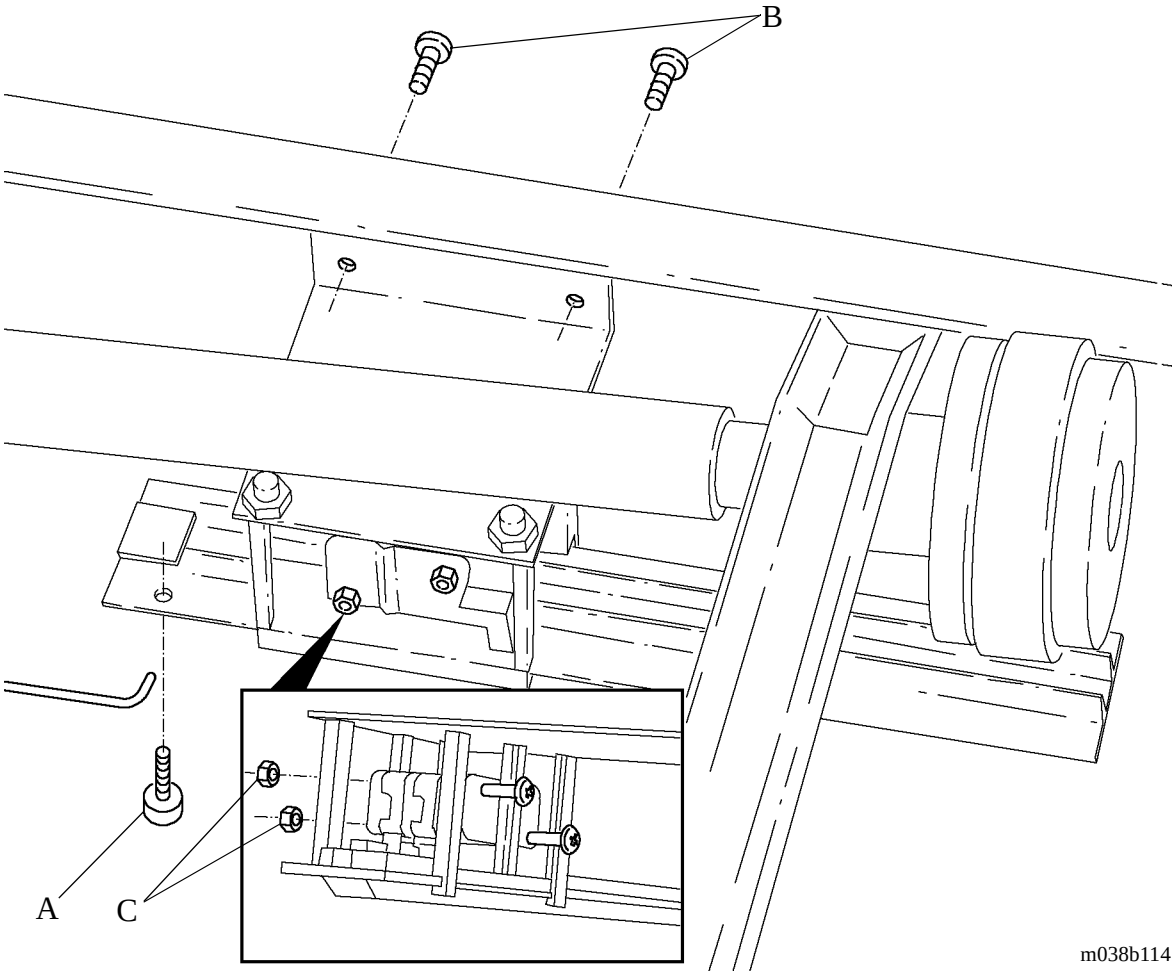

4. Remove the two screws (B) on the left side of the bed that hold the knee limit switch package to the bed frame.

5. Remove the two nuts (C) at the end of the head limit switch package. Remove the two screws enough to allow the inoperative switch to be removed.

6. Locate the proper switch: knee down limit switch (D), automatic contour knee up limit switch (E), or knee up limit switch (F) (see figure 4-21 on page 4-41).

Figure 4-21. Knee Limit Switch

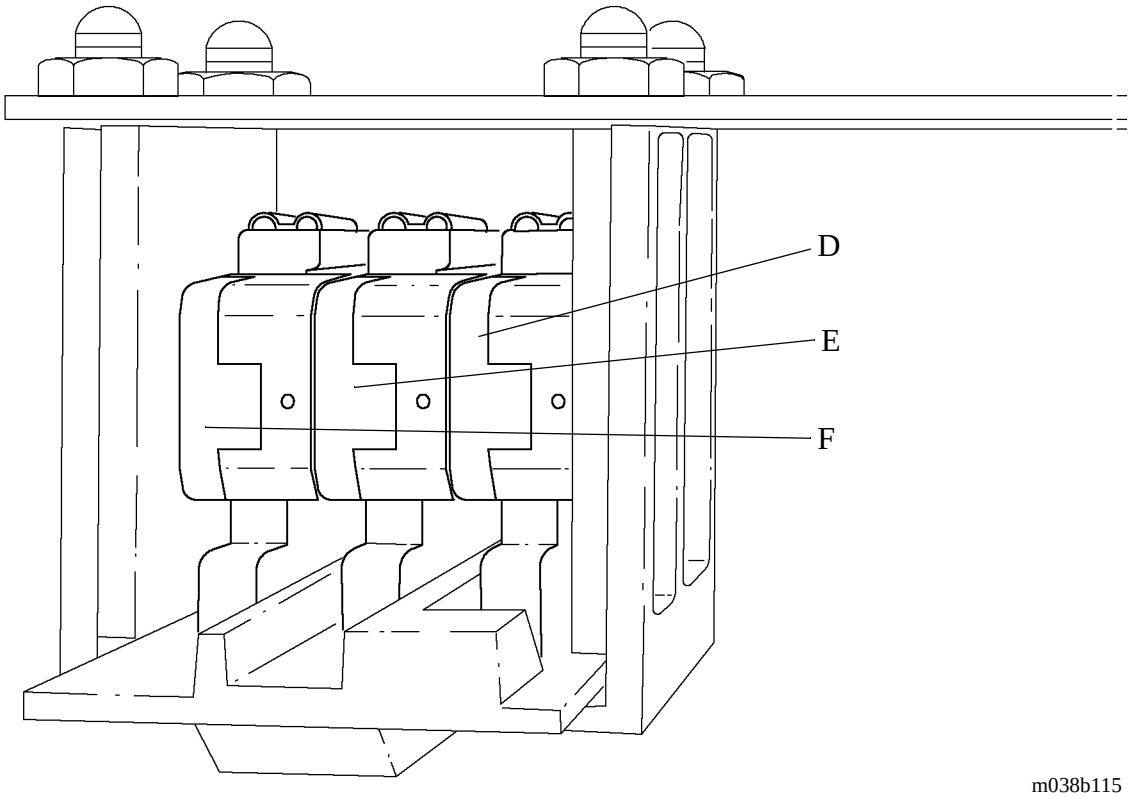

7. Remove the wires from the inoperative switch, and attach them to the replacement switch.

Replacement

1. Reverse the removal procedure for replacement of the knee limit switch.

2. Check to see if the head section functions properly. Adjustment of the head limit switch package may be necessary. See “Knee Limit Switch Adjustment” on page 4-82.

4.17 Hilow Motor

Tools required: 1/2" wrench
1/2" socket and ratchet

Removal

1. Raise the bed (hilow) to the high position.
2. Raise the head section approximately 35°.
3. Follow steps 1 through 5 of the section “Motor Cover” on page 4-22.
4. Unplug the bed from its power source.
5. Disconnect the hilow motor power cord.
6. Remove the bolt (A) and nut (B) (see figure 4-22 on page 4-42).

Figure 4-22. Hilow Motor Replacement

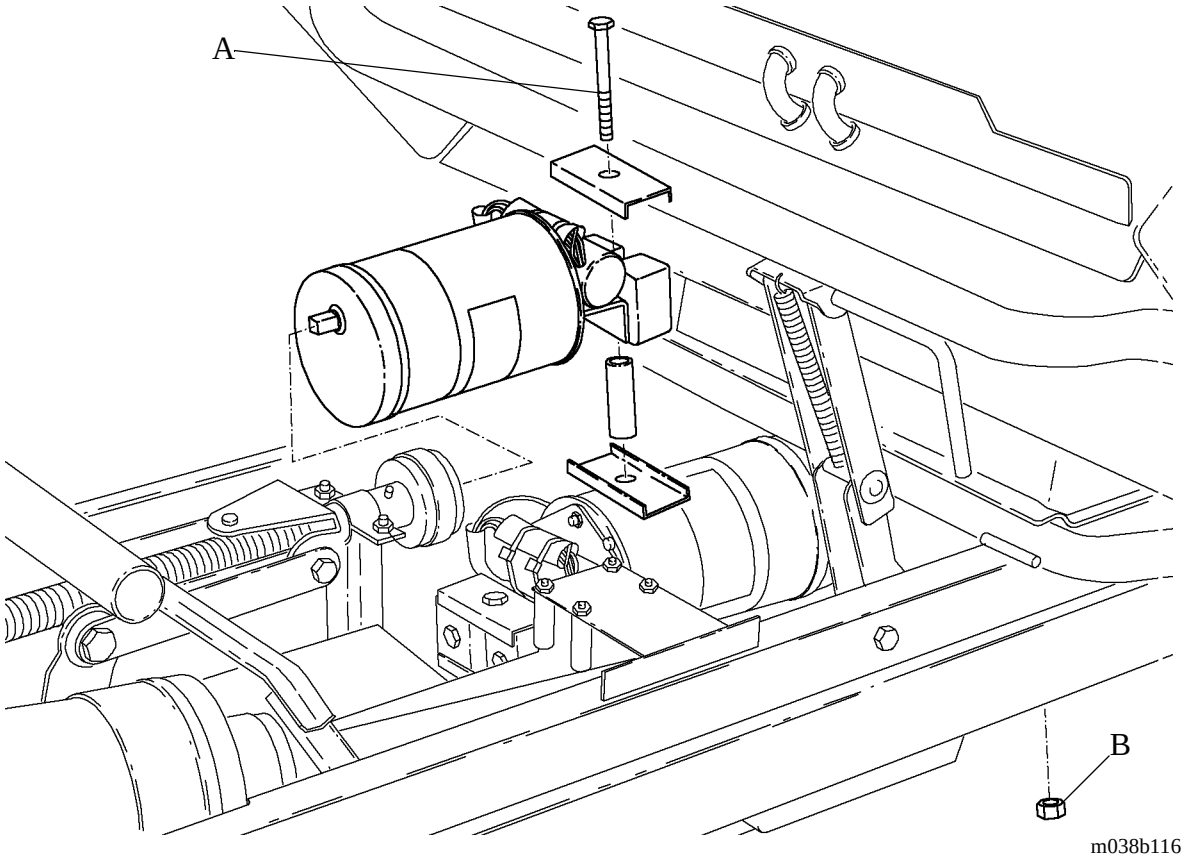

7. Slide the hilow motor towards the head end of the bed until the shaft disengages the coupling. Remove the hilow motor from the bed.

Replacement

1. Reverse the removal procedure to replace the hilow motor.
2. Check to see if the hilow motor functions properly.

4.18 Hilow Drive Screw Assembly

Tools required: 1/2" wrench
1/2" socket and ratchet
3/4" wrench
(2) 2 x 4 x 30" lumber
P2217 IV rod

Removal

1. Follow steps 1 through 7 of the section “Hilow Motor” on page 4-42.

2. Place the 2 x 4s (A) between the upper and lower frame (see figure 4-23 on page 4-44).

Figure 4-23. Hilow Drive Screw Assembly Replacement

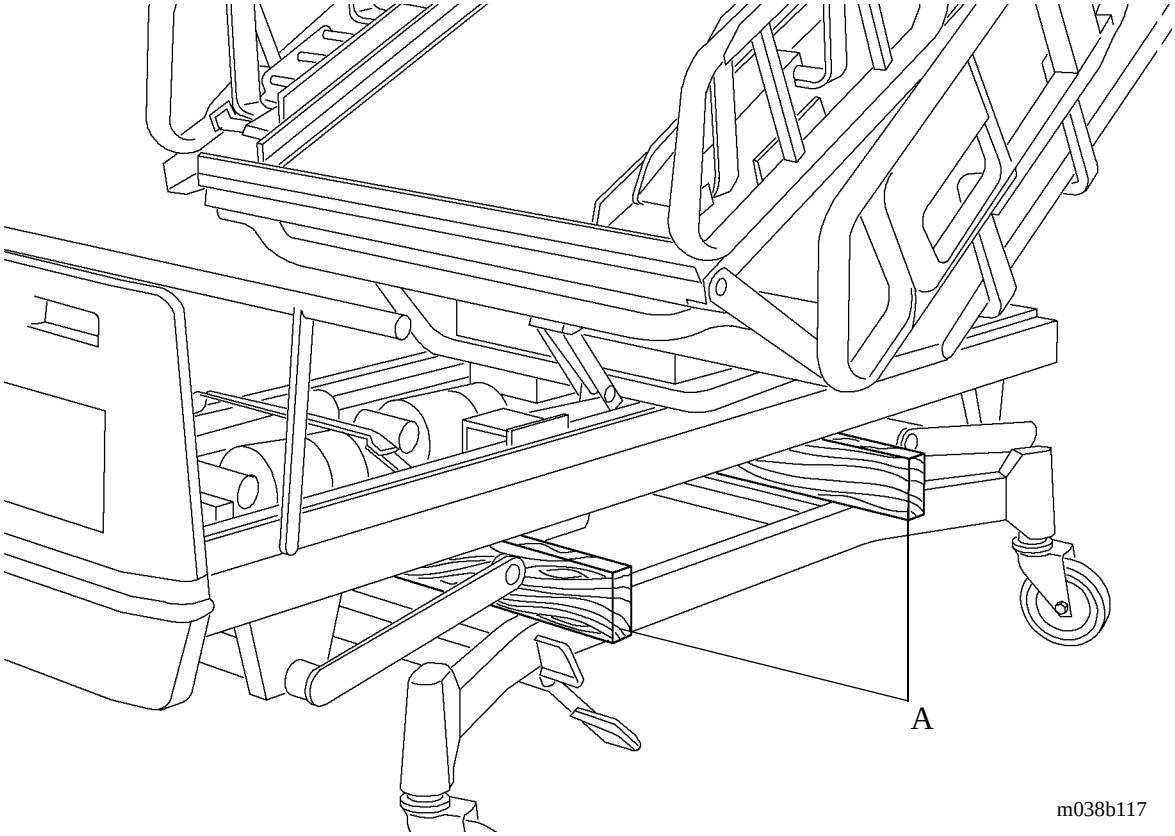

3. Use the IV rod, and manually crank the hilow portion of the bed down onto the 2 x 4s. See the section “Manual Operation of Bed (When Electric Power is Not Available)” on page 1-22.

4. Remove the two bolts (A) and two nuts (B) that go through the strap clamp (see figure 4-24 on page 4-45).

Figure 4-24. Hilow Screw Drive Assembly

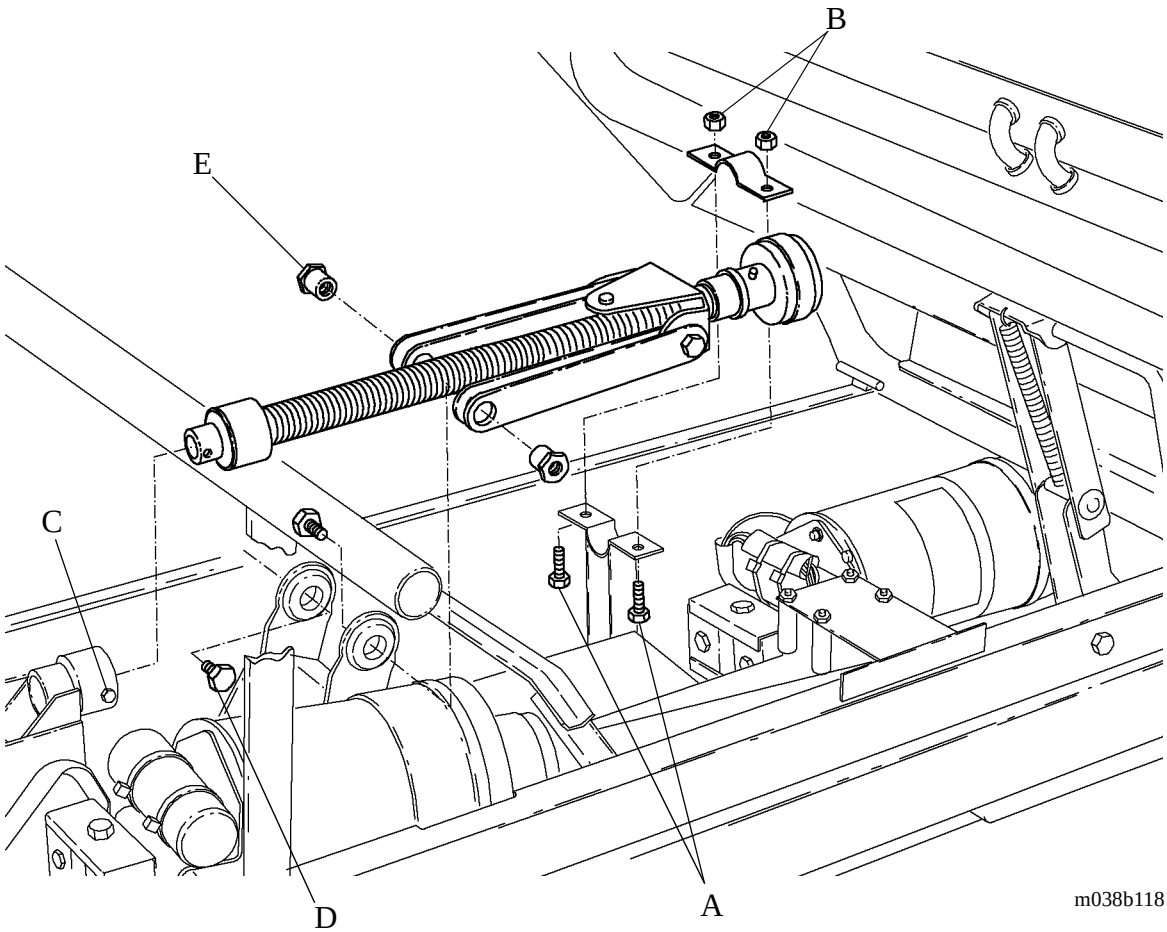

5. Remove the two bolts (C) that attach the brake mechanism assembly to the bed.

6. Remove the bolts (D) and the shoulder nuts (E) that attach the elevating straps to the lift arm mechanism.

7. Slide the hilow drive screw assembly toward the head end of the bed, and lift it out.

Replacement

1. Reverse the removal procedure for reassembly of the hilow drive assembly.

2. Check to see if the hilow drive screw assembly functions properly.

4.19 Hilow Limit Switch (P8400 Models Only)

Tools required: Phillips head screwdriver
1/4" nut driver

Removal

1. Follow steps 2 through 5 of the section “Motor Cover” on page 4-22.

2. Determine which limit switch needs replacing, the hilow up (A) or the hilow down (B) (see figure 4-25 on page 4-46).

Figure 4-25. Hilow Limit Switch Replacement (P8400 Models Only)

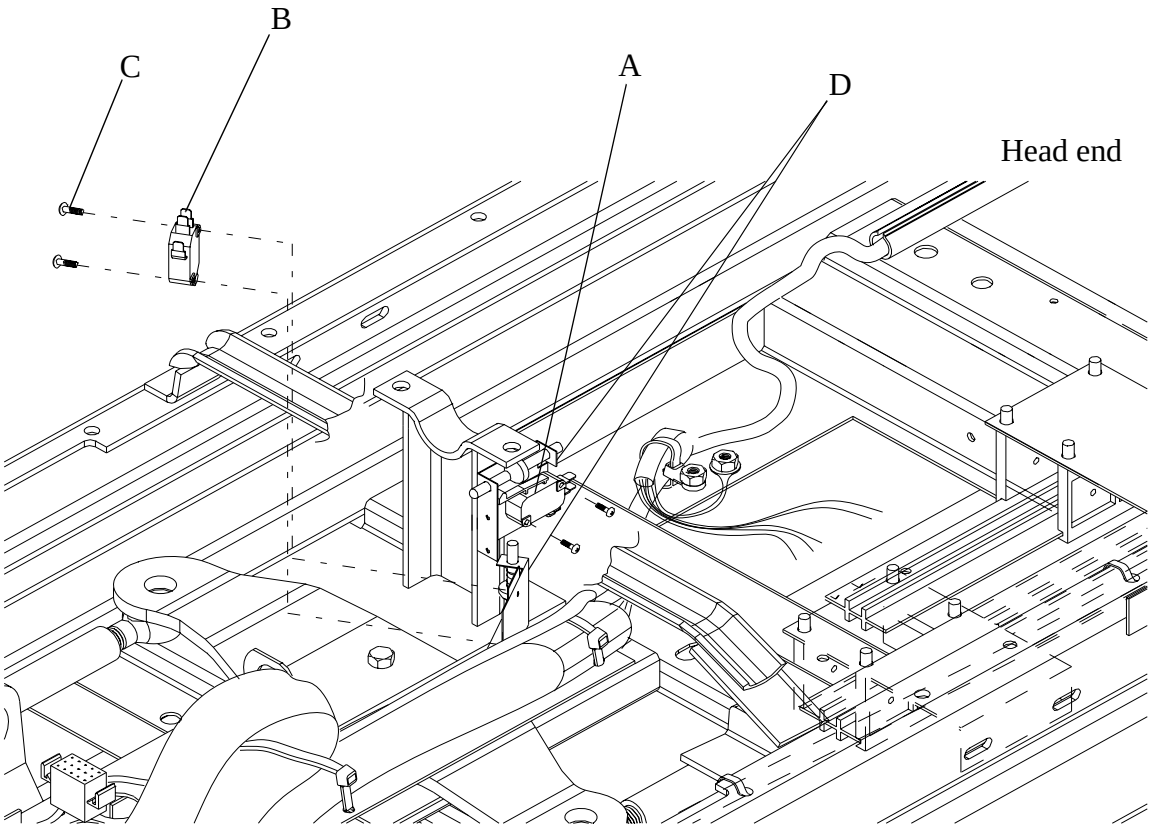

m038b132

3. Remove the terminals from the switch.

4. Remove the two screws (A) and two nuts securing the switch to the brackets (D).

Replacement

1. Reverse the removal procedure for replacement of the hilow limit switch.
2. Check to see if the hilow limit switch is working properly.

4.20 Hilow Limit Switch (P8500 Models Only)

Tools required: Phillips head screwdriver
1/4" nut driver
30 watt maximum solder iron
Solder (60 lead/40 tin)

Removal

1. Mark the relative position of the holder containing the damaged switch, so the limits will be adjusted correctly when the holder is reassembled to the bed.

2. Remove the two screws (A) securing the holder with the damaged switch (see figure 4-26 on page 4-48).

Figure 4-26. Hilow Limit Switch Replacement (P8500 Models Only)

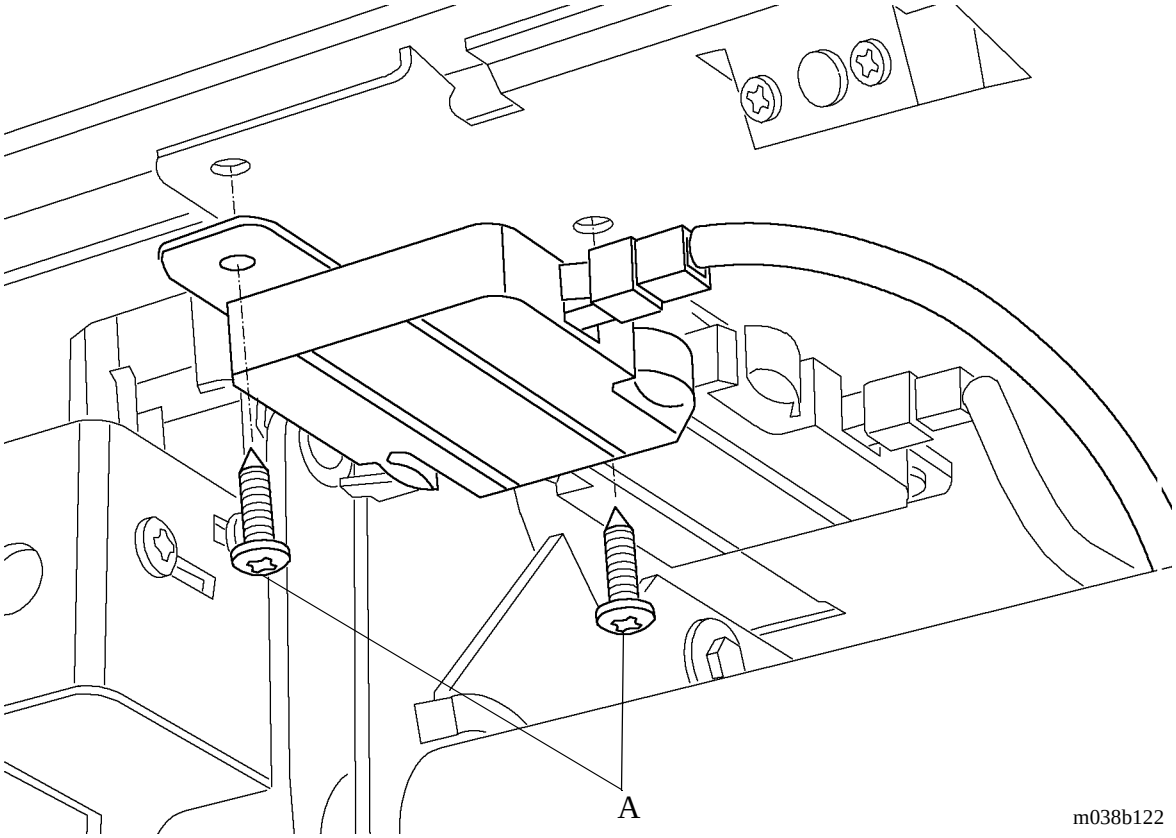

3. Unplug the harness from the holder.

4. To replace the Trendelenburg or Reverse Trendelenburg limit switch, go to step 8. To replace the hilow up or hilow down limit switch, go to step 5.

5. Remove the terminals going to either the hilow up or hilow down limit switch (B) (see figure 4-27 on page 4-49).

Figure 4-27. Trendelenburg and Hilow Limit Switch

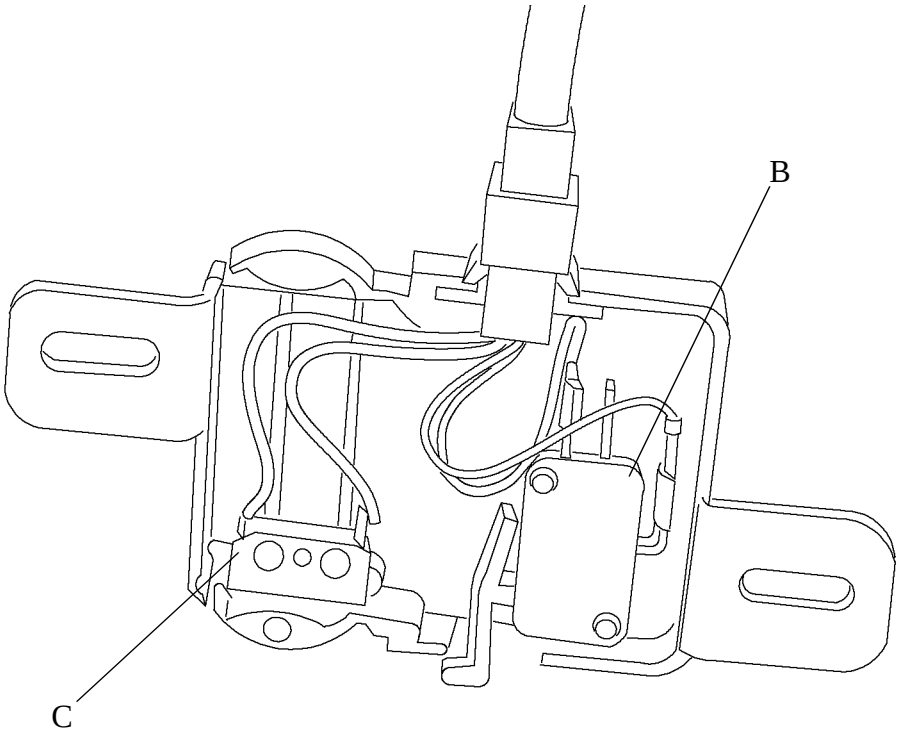

m038b130

6. Remove the push nuts holding the inoperative switch in place.

7. Fasten the terminals to the replacement switch. Fasten the switch to the bed with the push nuts. Go to step 10.

8. Use the solder iron and heat the solder joints on the Trendelenburg or Reverse Trendelenburg limit switch (C).

9. Transfer the wires to the replacement switch.

10. Remove the push nuts holding the inoperative limit switch to the bed. Replace the inoperative switch with the replacement switch, and fasten to the bed with the push nuts.

Replacement

1. Reverse the removal procedure for replacement of the limit switches.
2. Check to see if the limit switches are functioning properly. If the bed requires adjustment, see the section “Hilow Limit Switch Adjustment” on page 4-85.

4.21 Hilow Drive Screw Assembly—Slippage Correction

Tools required: Punch
Hammer

If an excessive amount of grease accumulates on the hilow drive screw brake assembly, the hilow section of the bed can slip down when the bed is not in the low position. Follow these instructions to correct the slippage problem.

Removal

1. Follow steps 1 through 7 of the section “Hilow Drive Screw Assembly” on page 4-44.

2. Remove the roll pin (A) from the foot end of the hilow drive screw assembly (see figure 4-28 on page 4-51).

Figure 4-28. Hilow Drive Screw Components

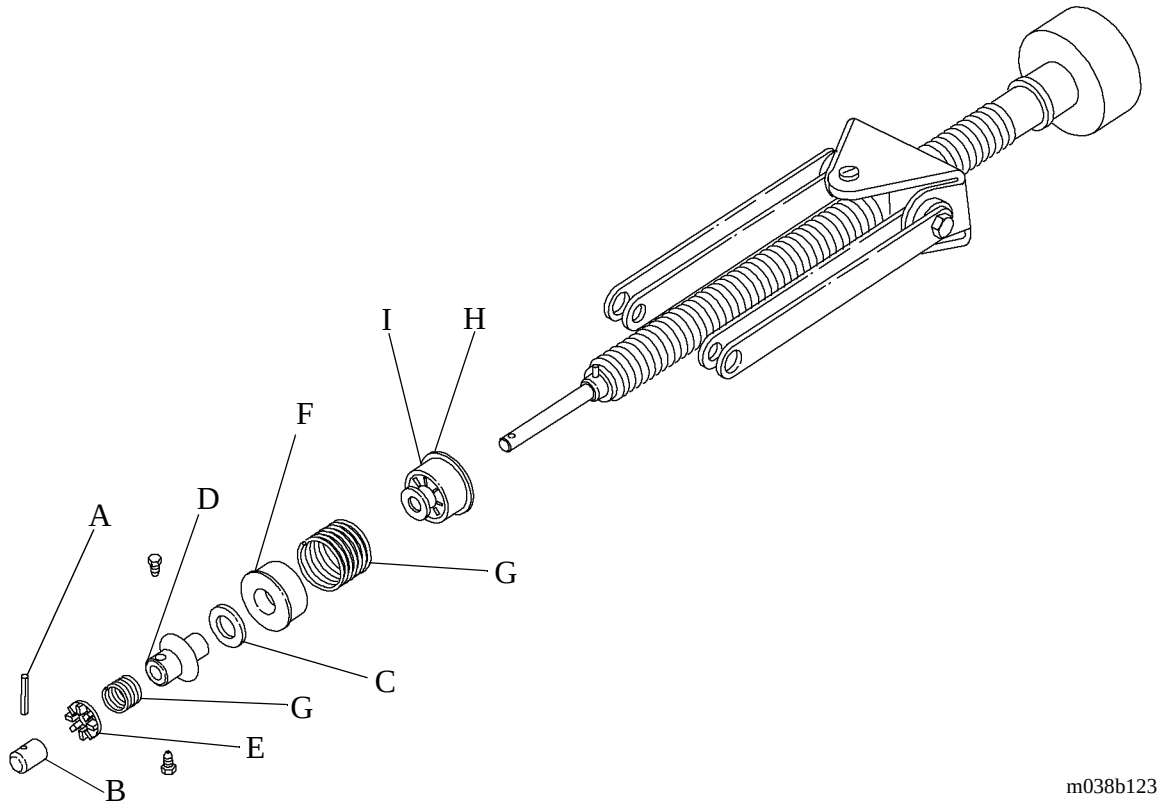

3. Remove the collar (B), washers (C), brake block (D), black washer (E), floating brake drum (F), large spring (G), and the fixed brake drum (H).

NOTE:
Note the orientation of the parts being removed from the hilow drive screw assembly. This will aid you during assembly.

4. Thoroughly clean the grease and oil from the collar (B), washers (C), brake block (D), black washer (E), large spring (G), thrust bearing (I), and the surfaces of the floating and fixed brake drums.

CAUTION:
Ensure the roller bearings do not get degreased during the cleaning process. Degreasing the roller bearings could cause the hilow drive screw to lock up.

Replacement

1. Reverse the removal procedure for assembly of the hilow drive screw assembly.

2. Check to see if the head drive screw assembly functions properly.

4.22 Hilow Drive Screw Assembly—Thrust Bearing

Tools required: Punch
Hammer

Removal

1. Follow steps 1 through 7 of the section “Hilow Drive Screw Assembly” on page 4-44.
2. Remove the roll pin (A) from the foot end of the hilow drive screw assembly.
3. Remove the collar (B), washers (C), brake block (D), black washer (E), and the floating brake drum (F). The thrust bearing (I) is located between the floating and fixed brake drums (H). Once the floating brake drum (F) is removed, the thrust bearing (I) is accessible.
4. Replace the thrust bearing with the replacement thrust bearing.

Replacement

1. Reverse the removal procedure for assembly of the hilow drive screw assembly.
2. Check to see if the hilow drive screw assembly is functioning properly.

4.23 Trendelenburg Limit Switch (P8500 Models Only)

Tools required: Phillips head screwdriver
1/4" nut driver
30 watt maximum solder iron
Solder (60 lead/40 tin)

Removal

1. Mark the relative position of the holder containing the damaged switch, so the limits will be adjusted correctly when the holder is assembled to the bed.

2. Remove the two screws (A) securing the holder with the damaged switch (see figure 4-29 on page 4-54).

Figure 4-29. Trendelenburg Limit Switch Replacement (P8500 Models Only)

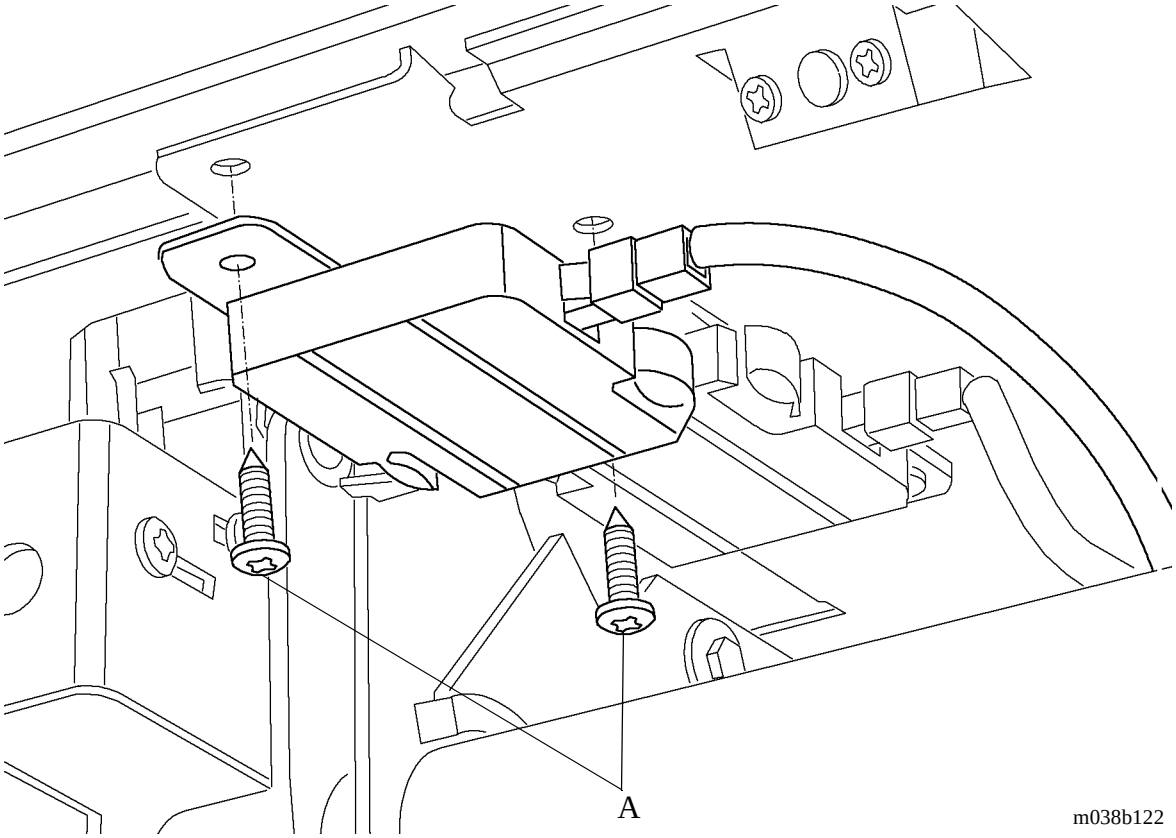

3. Unplug the harness from the holder.

4. To replace the Trendelenburg or Reverse Trendelenburg limit switch, go to step 8. To replace the hilow up or hilow down limit switch, go to step 5.

5. Remove the terminals going to either the hilow up or hilow down limit switch (B) (see figure 4-30 on page 4-55).

Figure 4-30. Trendelenburg and Hilow Limit Switch Locations

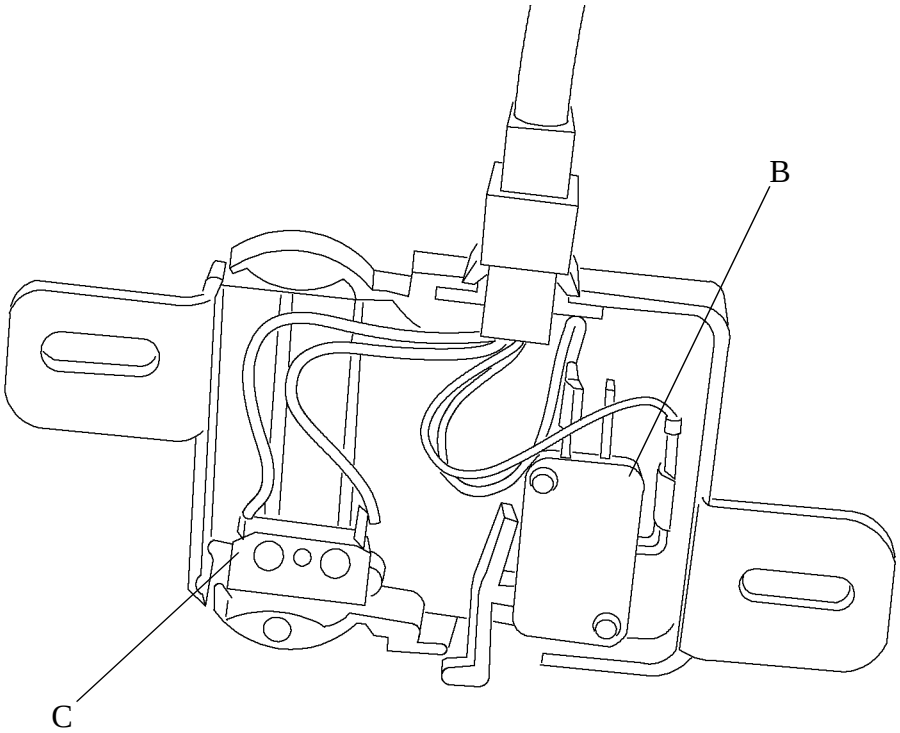

m038b130

6. Remove the push nuts holding the inoperative switch in place.

7. Fasten the terminals to the replacement switch. Fasten the switch to the bed with the push nuts. Go to step 10.

8. Use the solder iron and heat the solder joints on the Trendelenburg or Reverse Trendelenburg limit switch (C).

9. Transfer the wires to the replacement switch.

10. Remove the push nuts holding the inoperative limit switch to the bed. Replace the inoperative switch with the replacement switch, and fasten to the bed with the push nuts.

Replacement

1. Reverse the removal procedure for replacement of the limit switches.
2. Check to see if the limit switches are functioning properly. If the bed requires adjustment, see the section “Hilow Limit Switch Adjustment” on page 4-85.

4.24 Trendelenburg Engage/Disengage Switches (P8500 Models Only)

Tools required: Phillips head screwdriver
1/2" socket
Ratchet
Pliers

Removal

NOTE:
Before adjusting the Trendelenburg switches, check for proper hook travel and hilow up limit adjustment. See section “Hilow Up Limit Switch Adjustment (P8500 Models Only)” on page 4-86.

1. Make sure the double lock (A) is fully closed over the pin (B) (see figure 4-31 on page 4-57).

Figure 4-31. Trendelenburg Engage/Disengage Switches

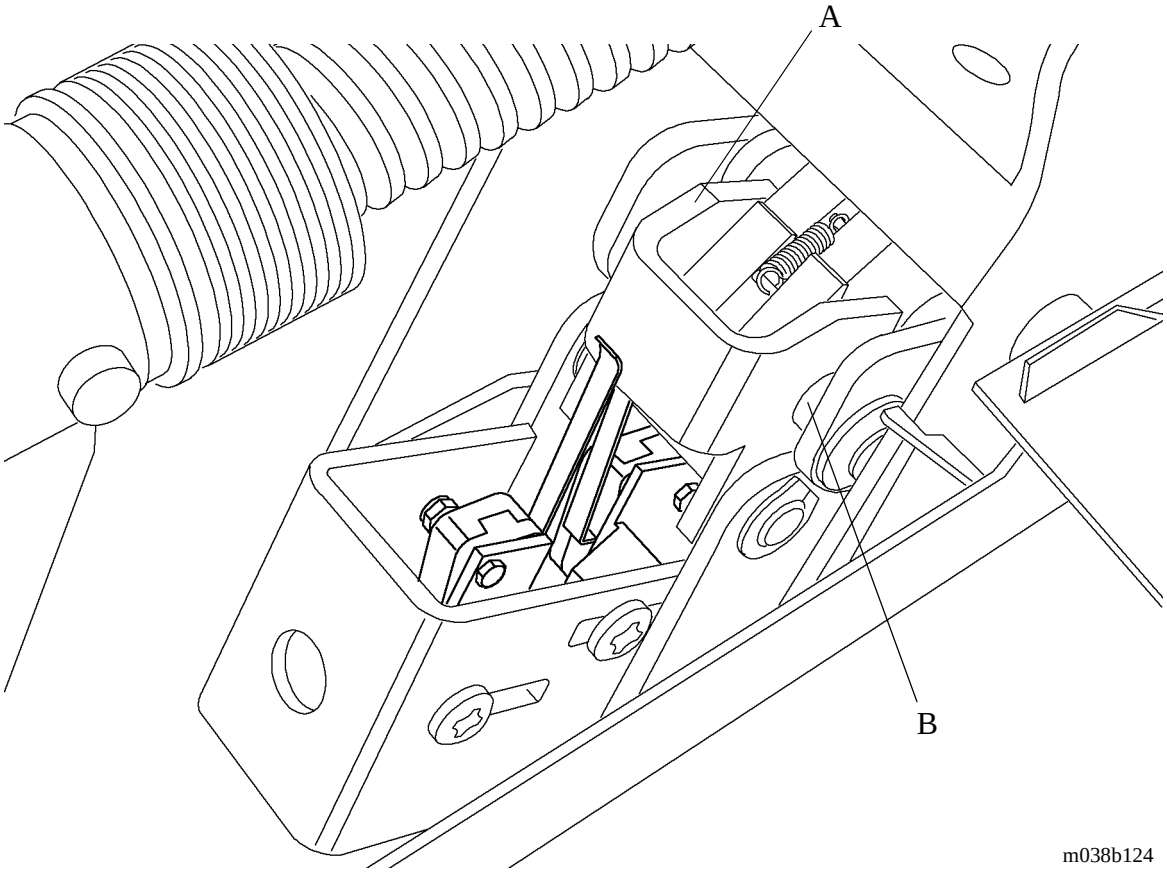

2. If it is engaged, raise the bed (hilow) to the high position.

3. If the double lock is not fully engaged, follow steps 6 and 7 of the section "Reverse Trendelenburg Engage/Disengage Switches (P8500 Models Only)" on page 4-64 before attempting to work under the bed.

WARNING:
Do not work under an unsupported load. Install appropriate temporary supports. Failure to do so could result in personal injury or equipment damage.

4. Unplug the bed from its power source.

WARNING:
Prior to removing the Trendelendburg box, ensure the bed is completely out of the Trendelenburg position. Failure to do so could result in personal injury or equipment damage.

5. Remove the two bolts holding the Trendelenburg box in place.

6. Remove the Trendelenburg box.

7. Find the defective switch, and replace it (see figure 4-32 on page 4-59).

NOTE:
Leave the mounting screw of the switch loose.

Figure 4-32. Trendelenburg Switch Locations

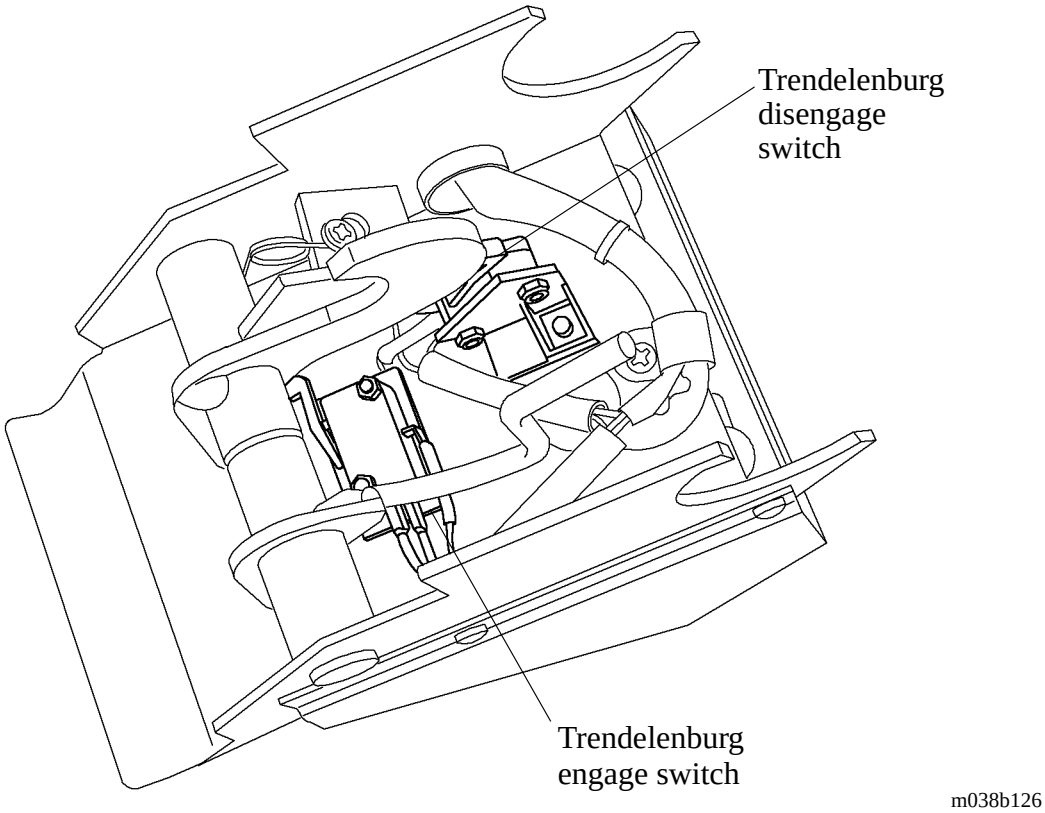

8. Assemble the Trendelenburg box to the bed using the two bolts.

9. Adjust both the Trendelenburg and Reverse Trendelenburg disengage switches. Slide the switch you replaced either up or down until you hear it click at the dimension (see figure 4-33 on page 4-60).

Figure 4-33. Trendelenburg Engage/Disengage Switch Tolerances

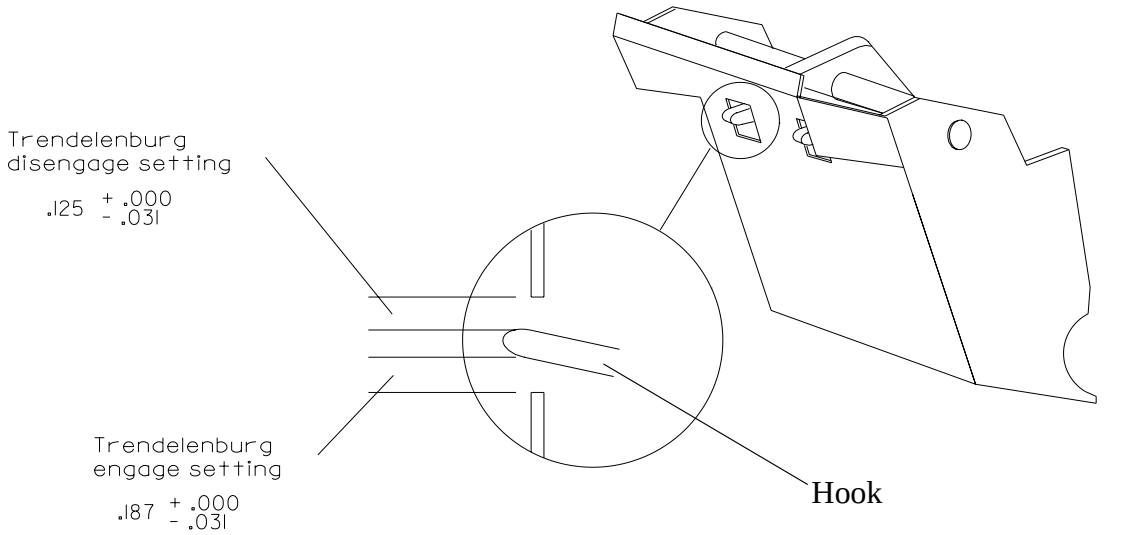

m038b127

4

10. Tighten the switch mounting screw, and check the setting.

4.25 Reverse Trendelenburg Limit Switch (P8500 Models Only)

Tools required: Phillips head screwdriver
1/4" nut driver
30 watt maximum solder iron
Solder (60 lead/40 tin)

Removal

1. Mark the relative position of the holder containing the damaged switch, so the limits will be adjusted correctly when the holder is assembled to the bed.

2. Remove the two screws (A) securing the holder with the damaged switch (see figure 4-34 on page 4-61).

Figure 4-34. Reverse Trendelenburg Limit Switch (P8500 Models Only)

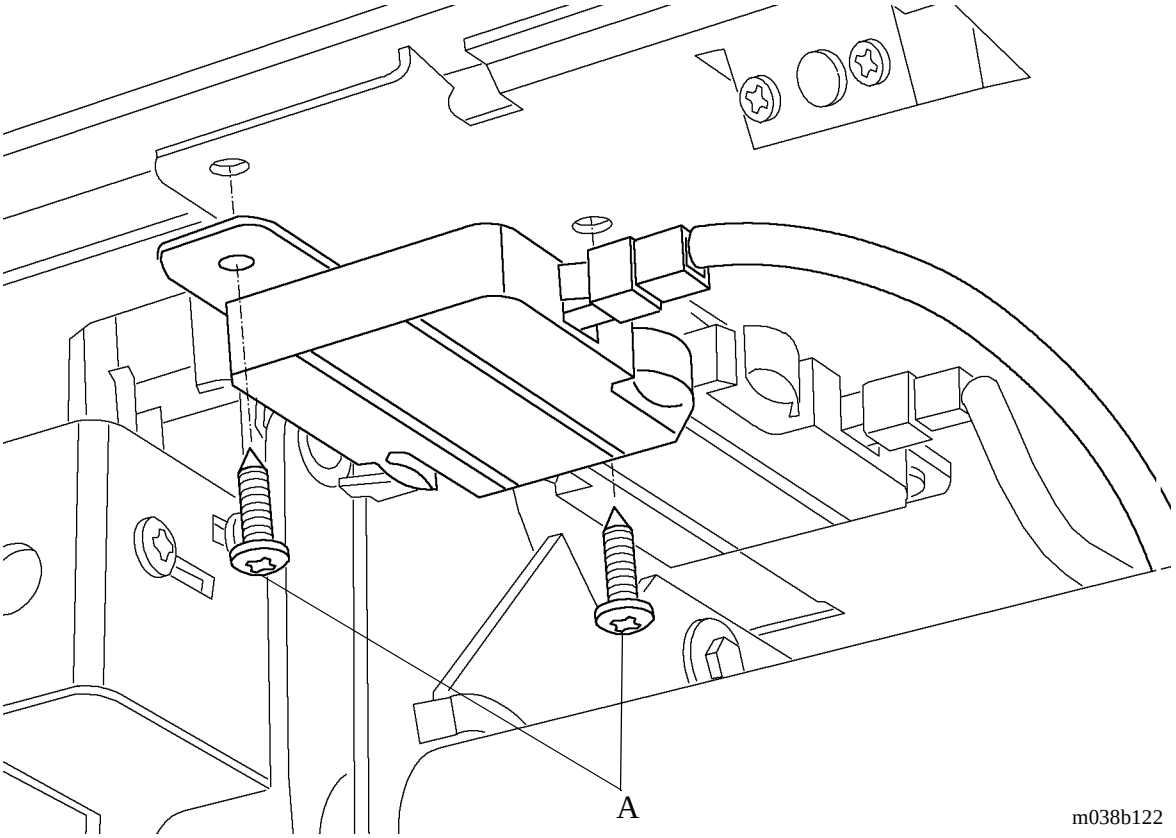

3. Unplug the harness from the holder.

4. To replace the Trendelenburg or Reverse Trendelenburg limit switch, go to step 8. To replace the hilow up or hilow down limit switch, go to step 5.

5. Remove the terminals going to either the hilow up or hilow down limit switch (B) (see figure 4-35 on page 4-62).

Figure 4-35. Reverse Trendelenburg and Hilow Limit Switch Locations

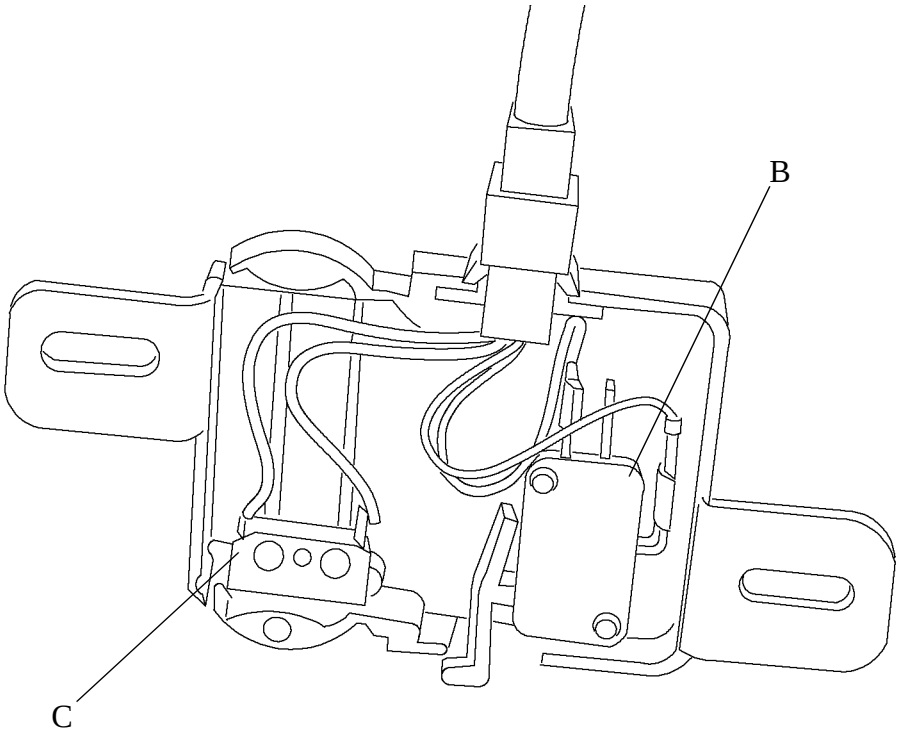

m038b130

6. Remove the push nuts holding the inoperative switch in place.

7. Fasten the terminals to the replacement switch. Fasten the switch to the bed with the push nuts. Go to step 10.

8. Use the solder iron, and heat the solder joints on the Trendelenburg or Reverse Trendelenburg limit switch (C).

9. Transfer the wires to the replacement switch.

10. Remove the push nuts holding the inoperative limit switch to the bed. Replace the inoperative switch with the replacement switch, and fasten to the bed with the push nuts.

Replacement

1. Reverse the removal procedure for replacement of the limit switches.
2. Check to see if the limit switches are functioning properly. If the bed requires adjustment, see the section “Hilow Limit Switch Adjustment” on page 4-85.

4.26 Reverse Trendelenburg Engage/Disengage Switches (P8500 Models Only)

Tools required: Phillips head screwdriver
3/8" wrench

Removal

1. For switch removal, go to step 2. For switch adjustment, go to step 10.

2. Run the bed into Reverse Trendelenburg until the bolt (A) can be removed (see figure 4-36 on page 4-64).

Figure 4-36. Component Locations

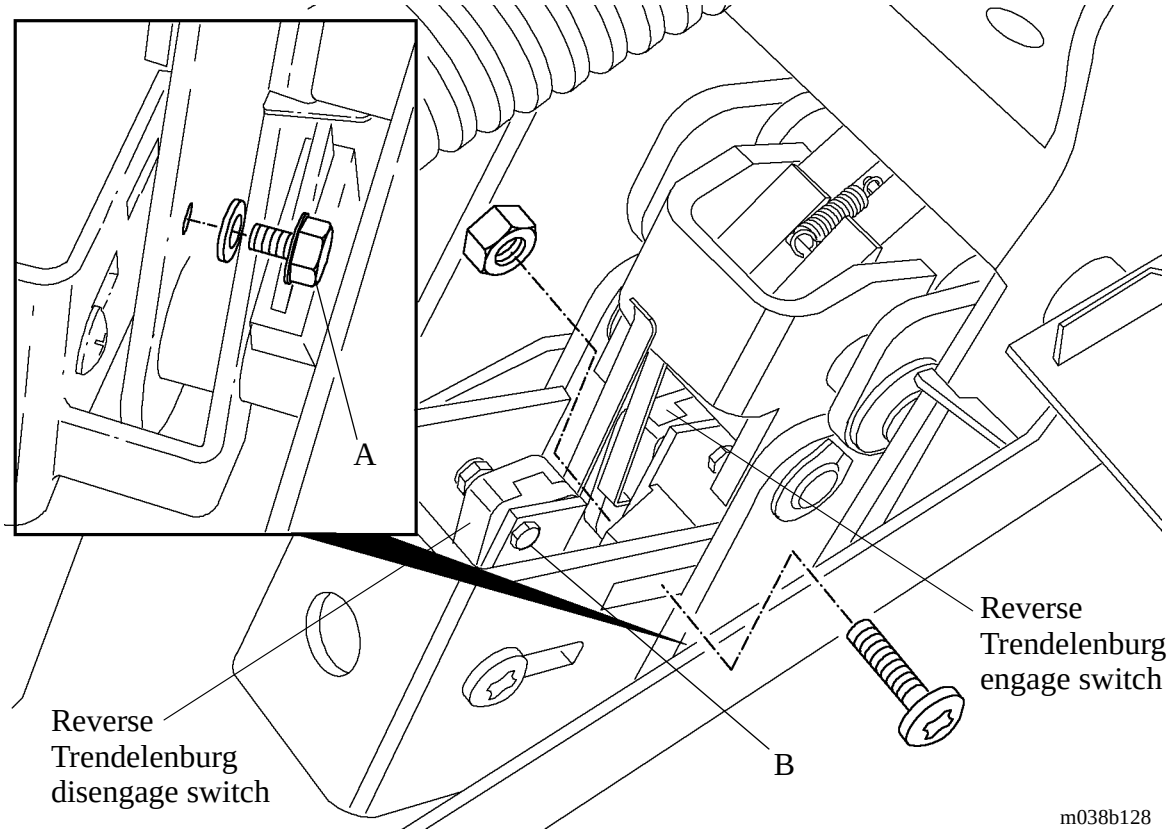

3. Unplug the bed from the wall outlet.

4. Activate the Reverse Trendelenburg lever while manually cranking the hilow motor until the bolt (A) can be removed.

NOTE:
Only use this procedure when the Reverse Trendelenburg will not work electrically.

5. For manually cranking the bed, see the section “Manual Operation of Bed (When Electric Power is Not Available)” on page 1-22.

6. Remove the bolt, and bring the entire assembly down enough to remove the screw (B) from the defective switch.

7. Remove the screw, and pull the switch and mounting block down to gain access to the Reverse Trendelenburg engage switch mounting screws.

8. Remove the wires from the defective switch.

9. Replace the defective switch.

Replacement

1. Reverse the removal procedure for replacement of the Reverse Trendelenburg engage/disengage switches.

2. For Reverse Trendelenburg engage switch adjustment, see step 3. For Reverse Trendelenburg disengage switch adjustment, see step 4.

3. Adjust the Reverse Trendelenburg engage switch. Set the Reverse Trendelenburg engage switch at a required maximum clearance of 0.156" (0.39624 cm), dimension (A), when the switch clicks (see figure 4-37 on page 4-66).

WARNING:
Follow the product manufacturer’s instructions. Failure to do so could result in personal injury or equipment damage.

Figure 4-37. Reverse Trendelenburg Switch Adjustment

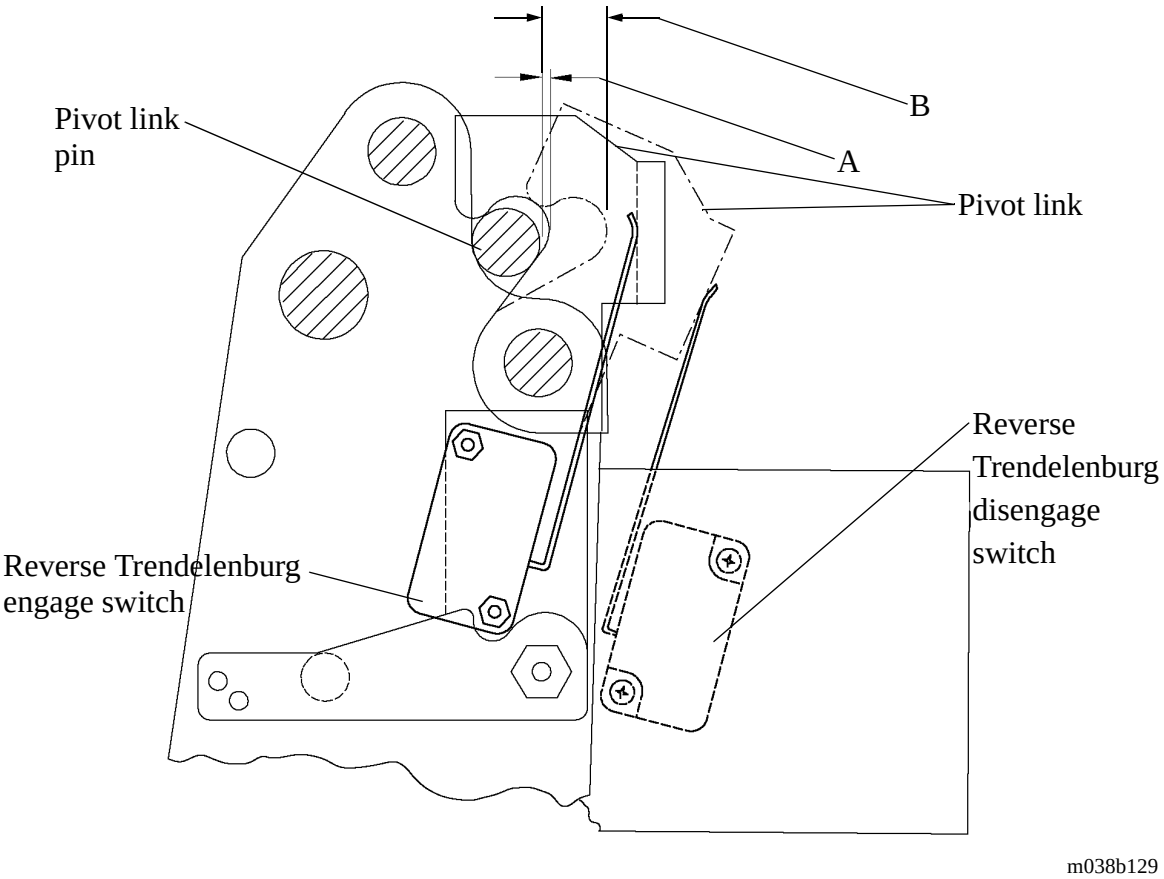

4. Adjust the Reverse Trendelenburg disengage switch. Set the Reverse Trendelenburg disengage switch at a required minimum clearance of 0.343" (0.87122 cm), dimension (B), when the switch clicks.

WARNING:
Follow the product manufacturer's instructions. Failure to do so could result in personal injury or equipment damage.

4.27 Brake Cam

Tools required: T25 torx head screwdriver
Punch
Hammer

Removal

1. Use the torx head screwdriver to remove the plastic covers from the left foot end caster and the right head end caster.

2. Unplug the bed from its power source.

3. Store and pad the siderails on one side of the bed. Tie the siderails, and lay the bed over on its side.

4. Remove the roll pin (A) located just under the brake block mechanism (B) (see figure 4-38 on page 4-67).

Figure 4-38. Brake Cam Replacement

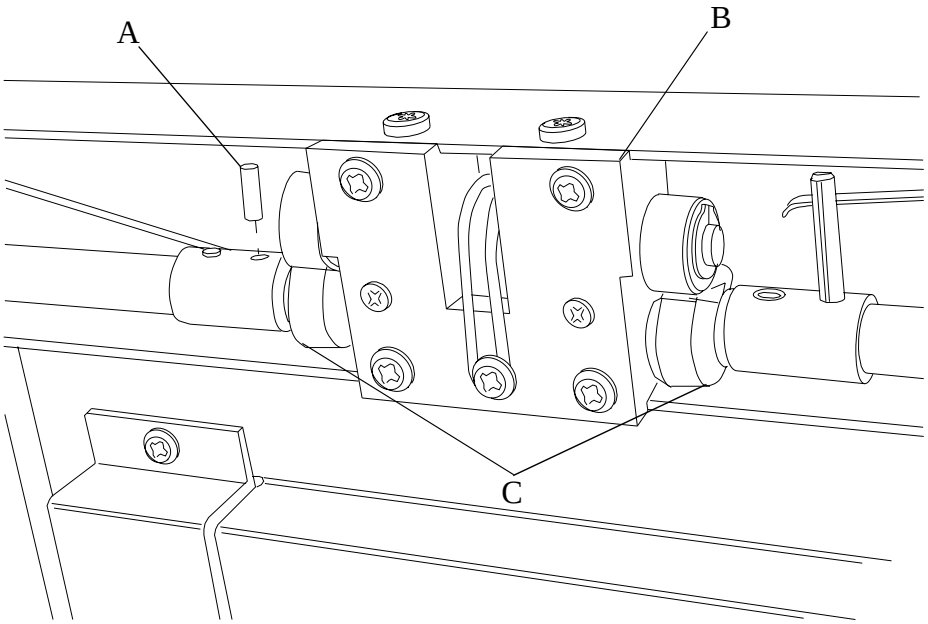

m038b068

5. Pull the upper brake/steer pedal through the brake block mechanism, and the cams (C) will fall out.

NOTE:
Note the orientation of the cams before removal. This will aid you during the assembly procedure.

6. Install the replacement brake cams.

Replacement

1. Reverse the removal procedure for assembly of the brake cam.
2. Follow step 2 through 7 of the section “Caster Adjustment” on page 4-92.
3. Check to see if the brakes and casters are functioning properly.

4.28 Brake Block Mechanism

Tools required: T25 torx head screwdriver
Phillips head screwdriver

Removal

1. Follow steps 1 through 6 of the section “Brake Cam” on page 4-67.

2. Remove the four screws (A) that hold the brake block mechanism (B) into the channel (see figure 4-39 on page 4-69).

Figure 4-39. Brake Lock Mechanism Replacement

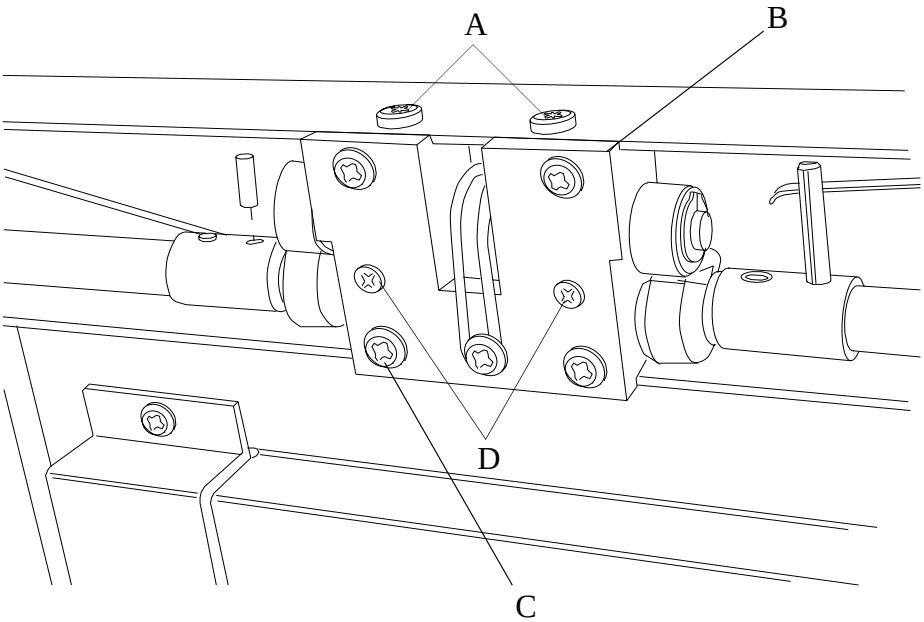

m038b131

3. Remove the five screws (C) and two screws (D) that go into the bottom of the brake block mechanism (B).

NOTE:
Note the orientation of the brake block mechanism and its components before removal. This will aid during the assembly procedure.

4. Disassemble the screws, adapter plate, and the bearings from the brake block mechanism assembly.

5. Replace or repair the brake block mechanism.

Replacement

1. Reverse the removal procedure for assembly of the brake block mechanism.
2. Follow step 2 through 7 of the section “Caster Adjustment” on page 4-92.
3. Check to see if the brakes and casters are functioning properly.

4.29 Brake Light Switch (P8500 Models Only)

Tools required: Phillips head screwdriver

Removal

The switch that actuates the brake light in the face of the nurse control panel is located in the cross channel of the base assembly that houses the brake mechanism at the foot end of the bed. To replace an inoperative switch, do the following:

1. Lower the bed (hilow) to the low position. If manual power is not available, see the section “Manual Operation of Bed (When Electric Power is Not Available)” on page 1-22.

2. Unplug the AC power cord from the wall outlet.

3. Tie the siderails to the frame of the bed while they are in the stored position.

4. Turn the bed over on its side.

5. Remove the two screws (A) and nuts that hold the inoperative switch in place (see figure 4-40 on page 4-71).

Figure 4-40. Brake Light Switch Replacement

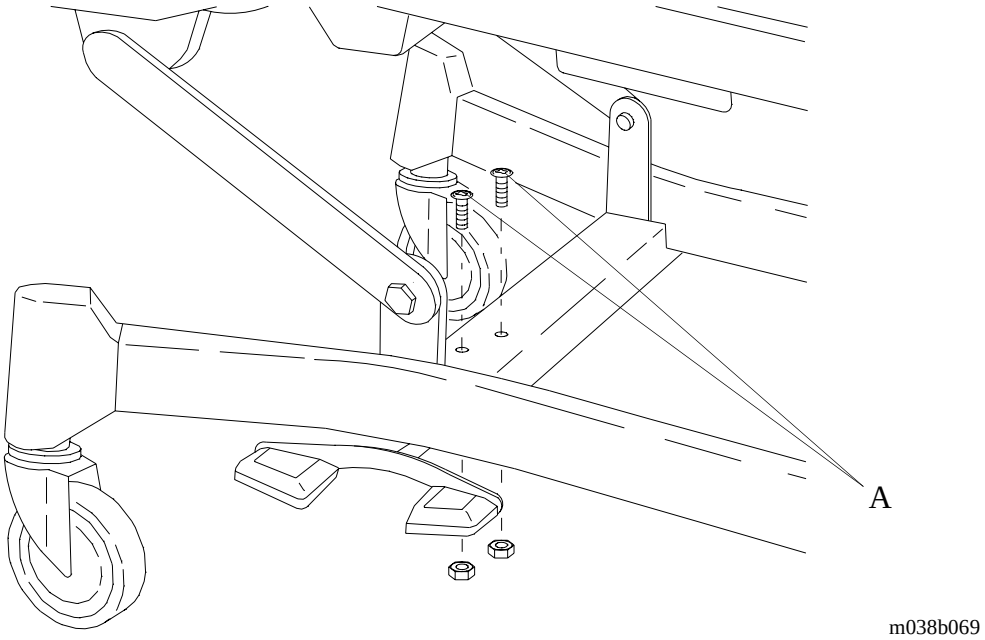

6. Transfer the wires to the new switch.

Replacement

1. Reverse the removal procedure for reassembly of the brake light switch.
2. Check to see if the brake light is functioning properly.

4.30 Attendant Control Panel

Tools required: Phillips head screwdriver

Removal

1. Follow steps 2 through 5 of the section “Motor Cover” on page 4-22.
2. Unplug the control panel wire harness from the P.C. board.
3. Slide the entire attendant control panel (C) to your left (see figure 4-41 on page 4-73).

Figure 4-41. Attendant Control Panel Replacement

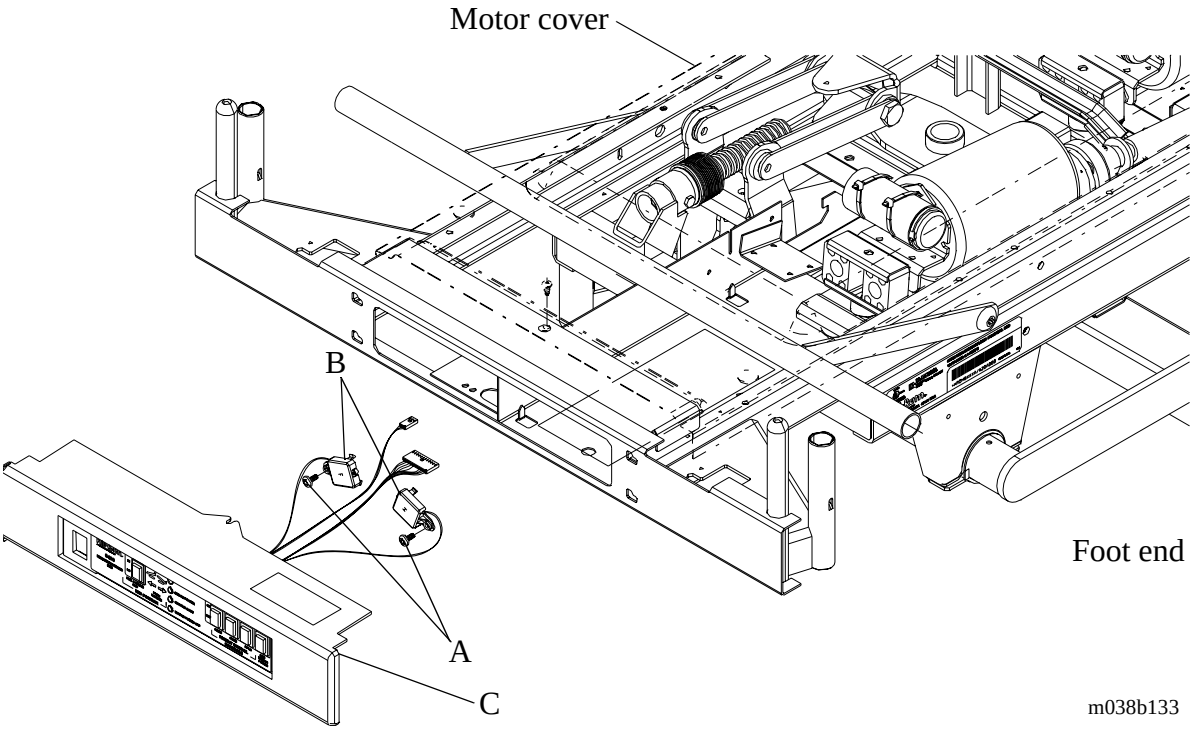

4. Using the phillips head screwdriver, remove the two limit switch mounting screws (A) securing the two limit switch housings (B).

Replacement

Reverse the removal procedure for assembly of the attendant control panel.

4.31 SideCom Communication System Entertainment Control Assembly

Tools required: Phillips head screwdriver
Standard screwdriver
1/4" nut driver

Removal

1. Unplug the bed from its power source.
2. Unplug the communication cable from the siderail nurse call assembly.
3. Lift the small sliding door, and remove the two screws (A) and the back cover (see figure 4-42 on page 4-75) (If the entertainment module does not contain bed exit, the small sliding door will be replaced by a plastic blank plate. This plate must be pried out with a thin blade tool.).

Figure 4-42. SideCom Communication System Entertainment Control Replacement

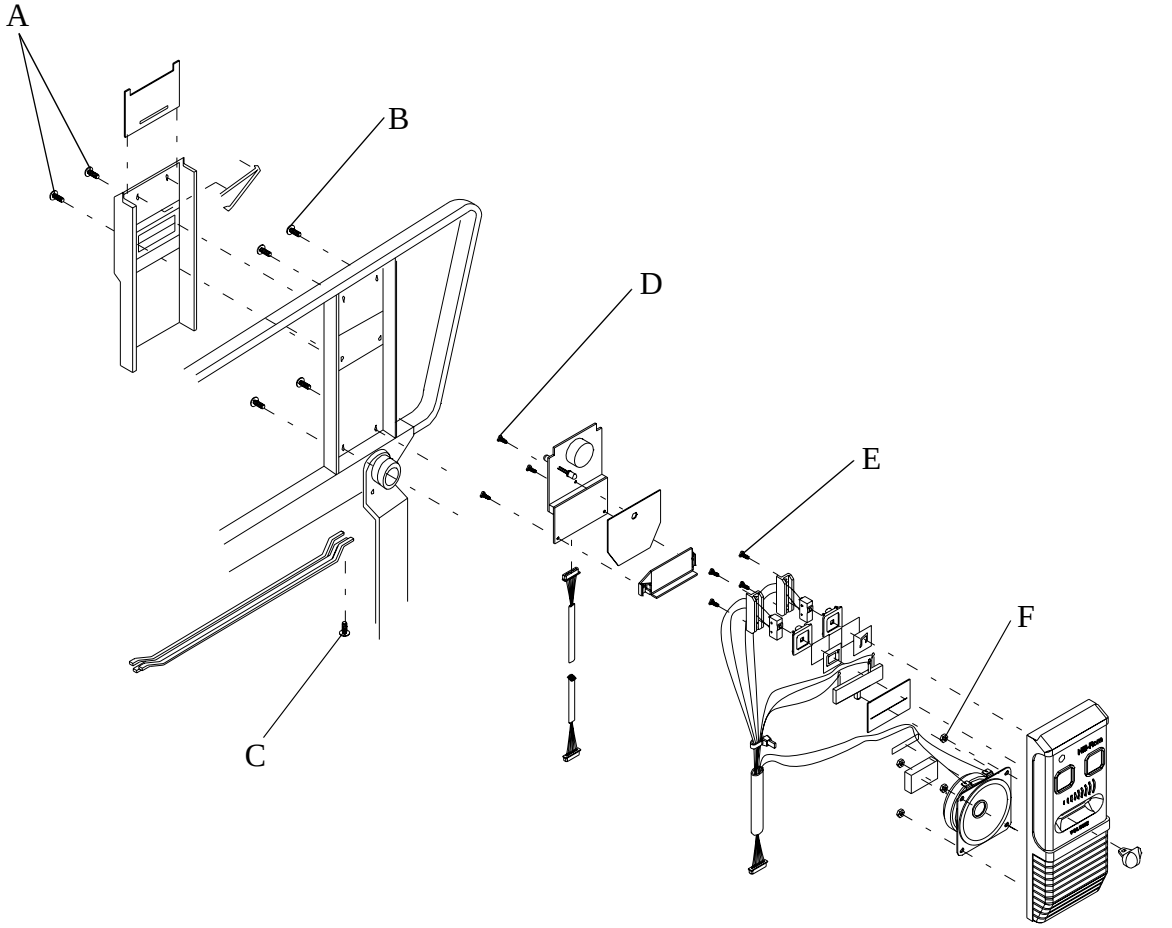

m038b072

4. Remove the four screws (B).
5. Remove the screw (C) and the bottom cover.
6. Unplug the connector, and lift the entertainment module out of the siderail.
7. To gain access to the TV, radio, and volume control switches, remove the three screws marked (D), holding the bed exit circuit board in place (on entertainment modules with bed exit only).
8. Before removing the two screws (E) holding the defective switch, note the orientation of all components.
9. Replace the switches, speakers, and volume controls by detaching the connector and replacing them with the replacement controls.

10. Replace the volume control by pulling it out from the back side of the module. Keep the slide button from the front side of the module to use with the replacement volume control.

11. To replace the speaker, remove the four nuts marked (F) holding it in place.

Replacement

Reverse the removal procedure for assembly of the SideCom Communication System entertainment control assembly.

4.32 Siderail Nurse Call, Lighting, or Bed Control Switch Assembly

Tools required: Phillips head screwdriver

Removal

1. Unplug the bed from its power source.
2. Unplug the communication cable from the siderail nurse call assembly.
3. Put the siderail into the full up position.
4. Remove the seven screws (A) (see figure 4-43 on page 4-77).

Figure 4-43. Siderail Nurse Call, Lighting, or Bed Control Switch Assembly Replacement

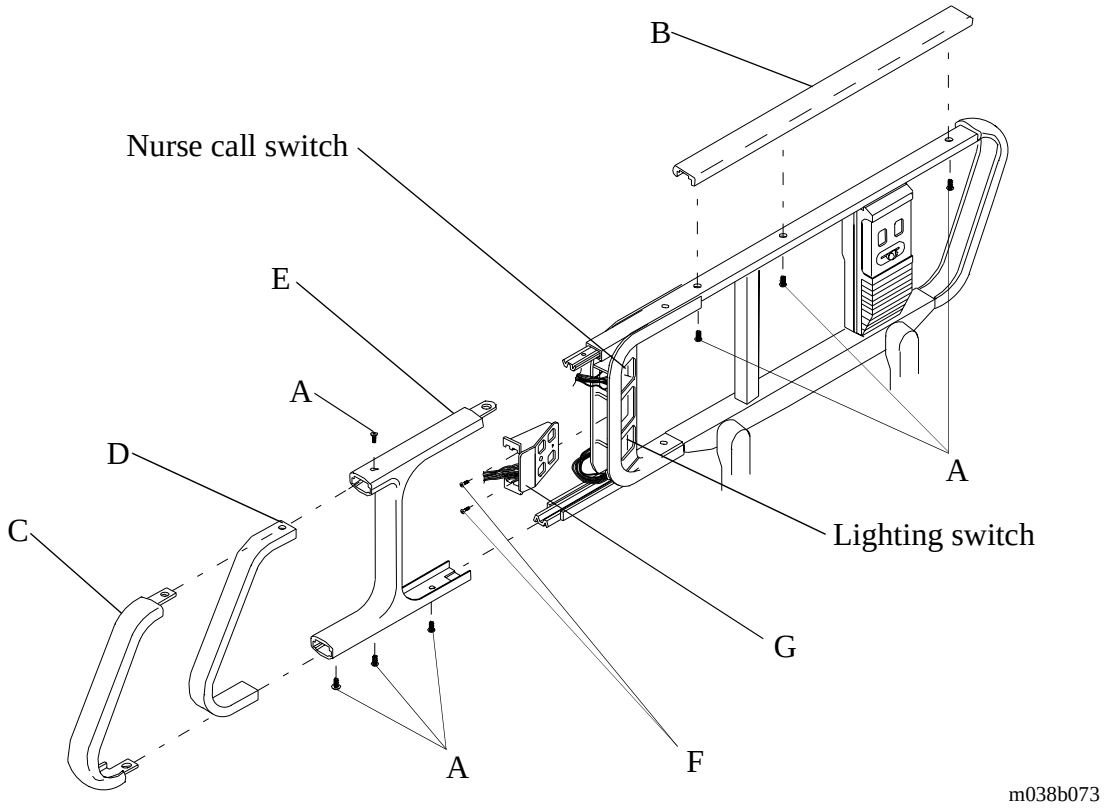

5. Remove the top cane cover (B), end cover (C), extension tube (D), and control housing cover (E).

6. Remove the two screws (F), and slide the switch housing (G) out of the siderail. Find the defective switch, and place the defective switch and the new switch side by side to make sure they are the same.

7. If your replacement switch does not have wire leads soldered onto it, melt the solder, and remove the wire leads one at a time from the defective switch. Transfer the wires to the corresponding solder pads of the new switch, and solder in place.

8. If your replacement switch has wire leads already soldered onto it, cut the wires attached to the defective switch close to the switch. Strip the leads approximately 3/16" (0.476 cm). Push the ends into the splice terminal of the corresponding color wire on the new switch, and crimp the terminal.

Replacement.

Reverse the removal procedure to assemble the siderail nurse call, lighting, or bed control switch assembly.

4.33 Siderail LED Indicator

Replacement

See section “Siderail Nurse Call, Lighting, or Bed Control Switch Assembly” on page 4-77 for gaining access to and replacement of the LED indicator.

4.34 Siderail

Tools required: T25 torx head screwdriver
Phillips head screwdriver

Removal

1. Raise the head or foot section of the bed for the siderail being removed.

2. If a head end siderail is being removed, unplug the siderail control cable (A) from the bed (see figure 4-44 on page 4-80).

Figure 4-44. Siderail Removal

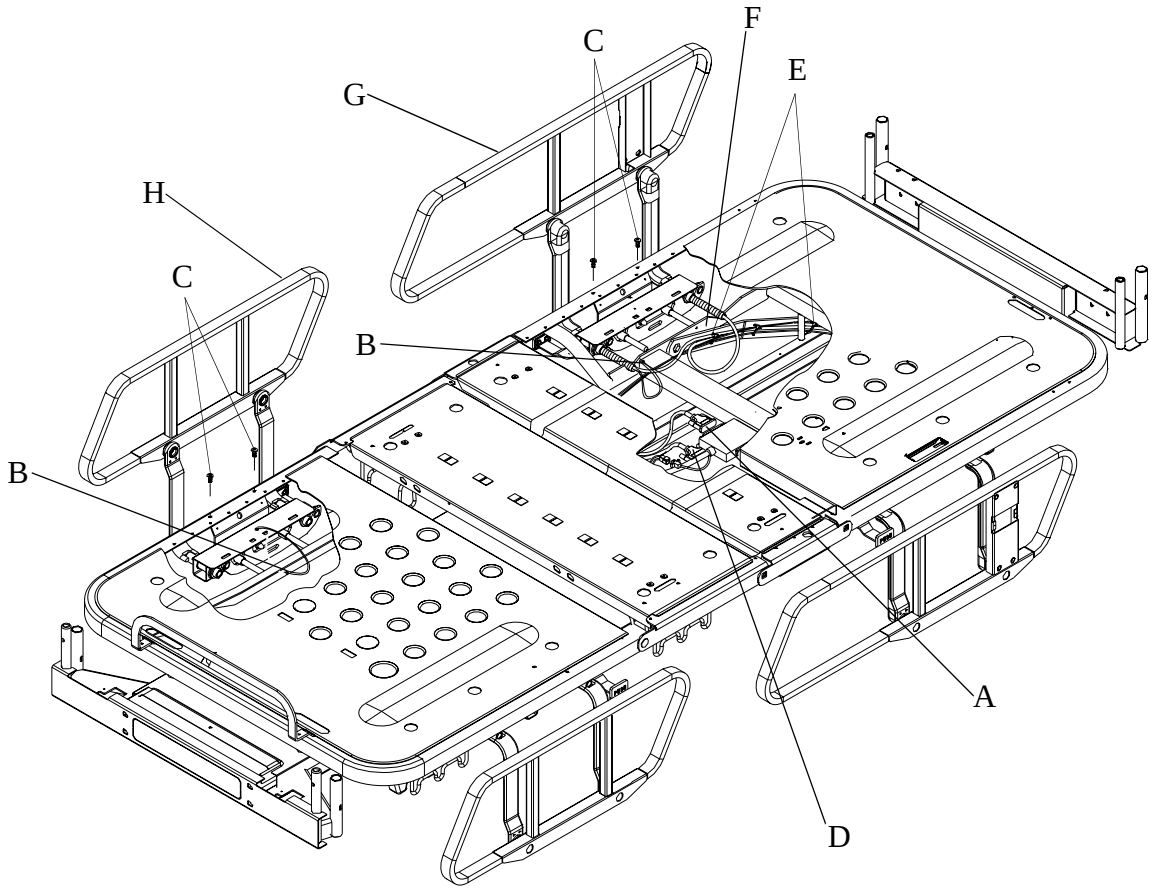

m038b074

3. Unplug the communication cable (B), if present, from the bed (see figure 4-45 on page 4-81).

Figure 4-45. Communication Cable Location

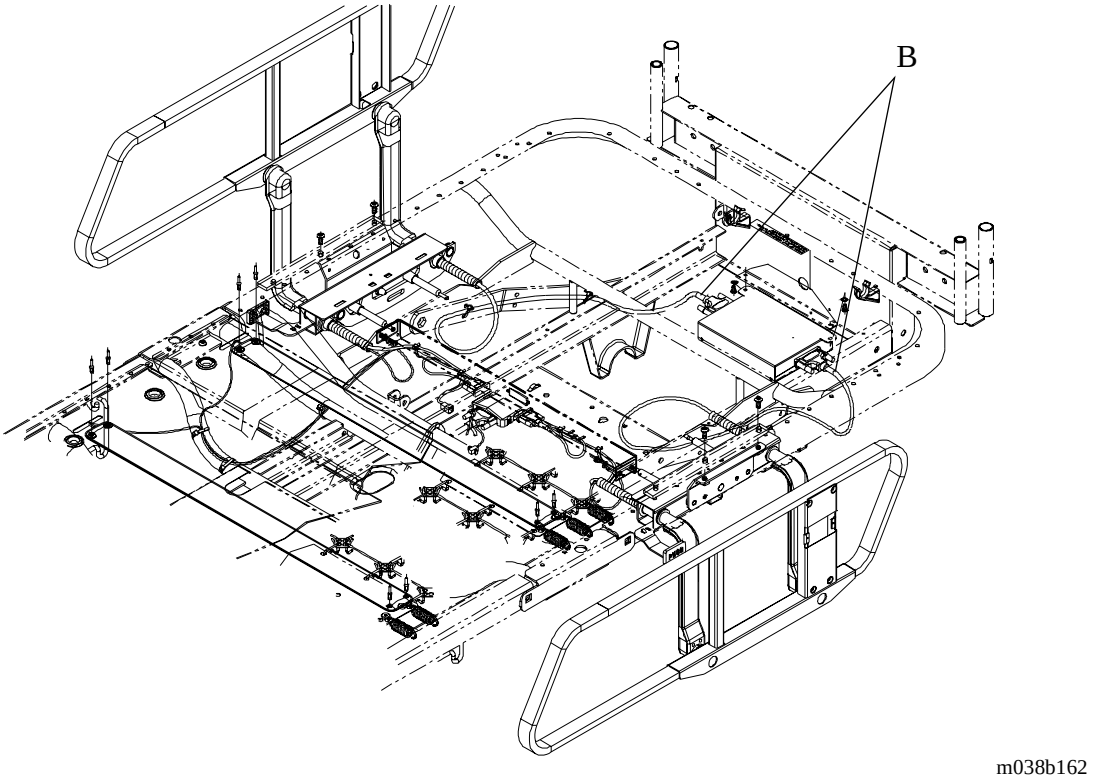

4. Remove the two wire ties (E) from the head end lift arm (F).

5. Using the phillips head screwdriver, remove the screw (B) that secures the ground cable to the head (G) or foot section (H).

6. Remove the two screws (C) that secure the siderail to the head or foot section.

Replacement

1. Reverse the removal procedure to install the replacement siderail to the bed.

2. Ensure that all functions of the siderail work properly.

4.35 Knee Limit Switch Adjustment

Tools required: Phillips head screwdriver

1. Loosen the two screws (A) on the left side of the bed (see figure 4-46 on page 4-82).

Figure 4-46. Knee Limit Switch Adjustment

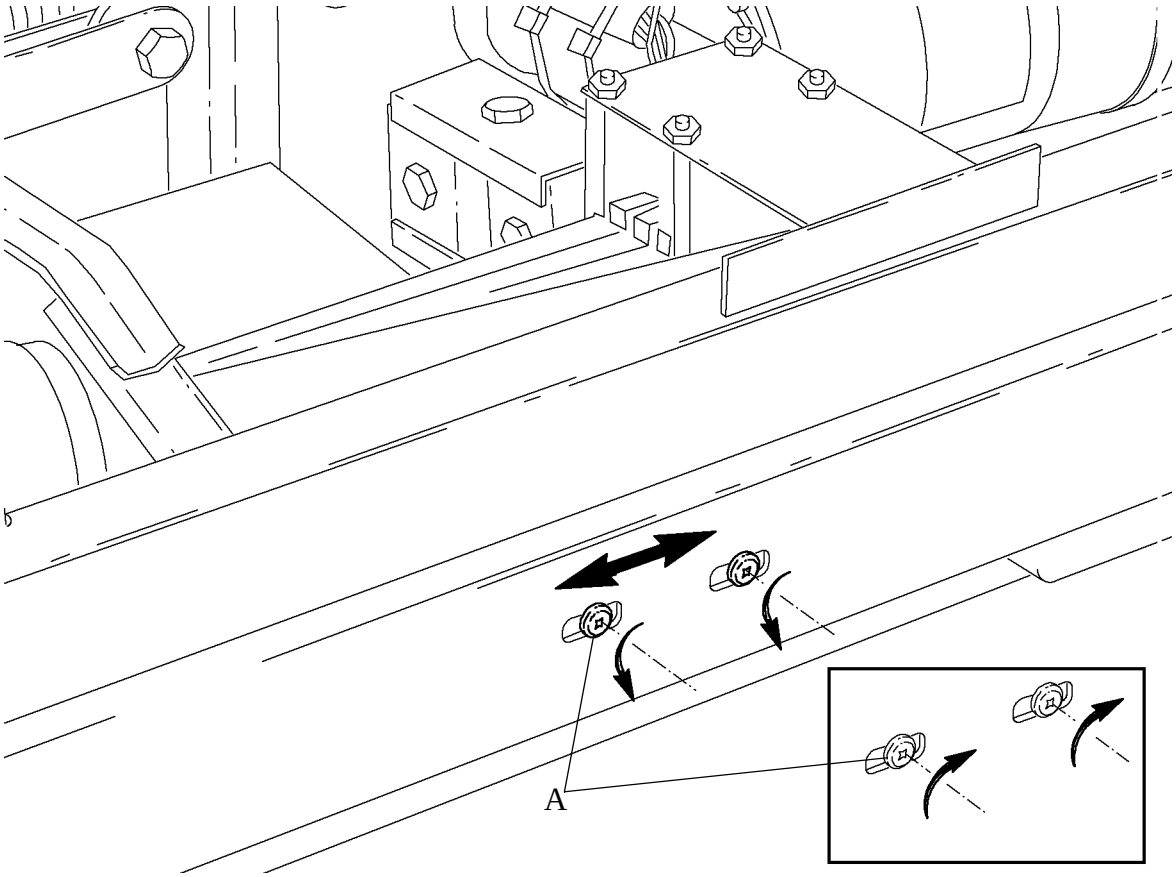

2. Slide the screw heads toward the head end or foot end of the bed. Set the knee limit switch so the knee release will reset itself, and latch prior to the knee motor shutting off in the downward mode.

3. Tighten the two screws (A).

4.36 Head Limit Switch Adjustment

Tools required: Phillips head screwdriver
or 3/8" nut driver

1. Run the knee section to the high position.
2. Turn off the knee lock out to ensure the knee section will not run down as the head section is lowered.
3. Run the head section down until the studs on the bottom of the head section slightly touch the upper frame.
4. Follow steps 2 through 5 of the section “Motor Cover” on page 4-22.
5. Loosen the two screws or nuts (A) (see figure 4-47 on page 4-83).

Figure 4-47. Head Limit Switch

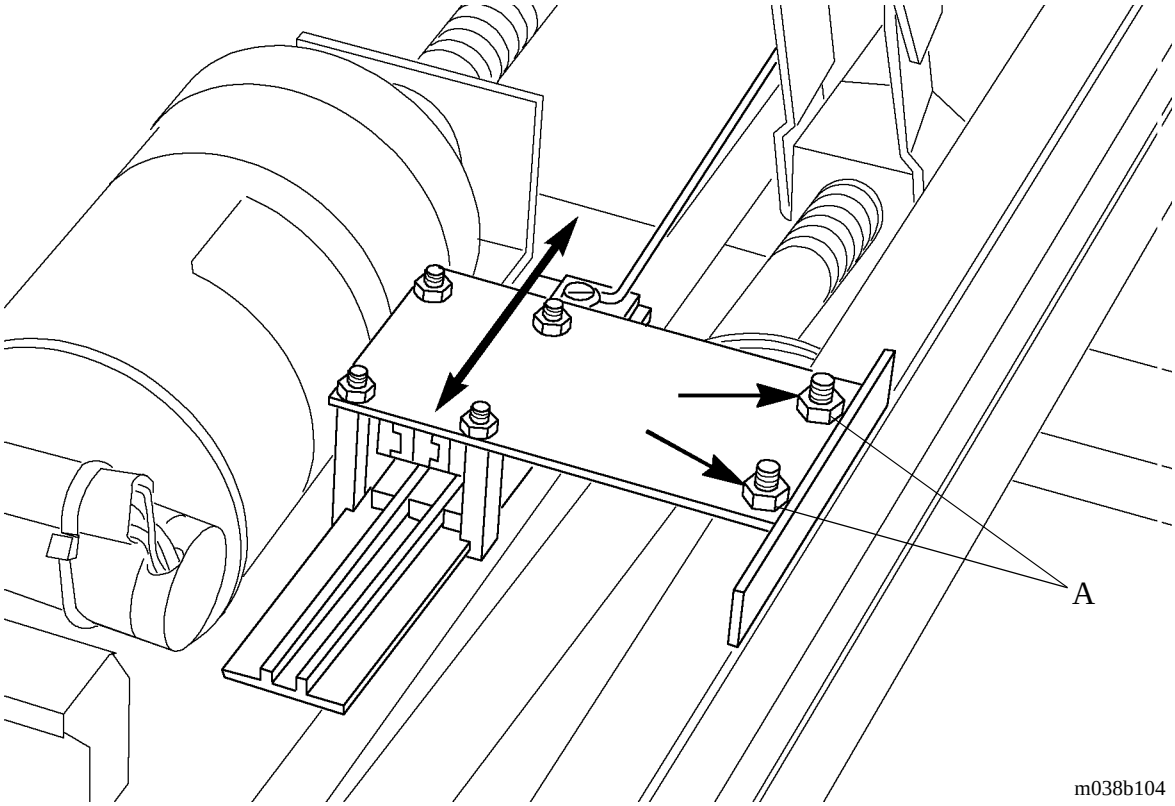

6. Slide the entire head limit switch package either towards the head end or the foot end until the down function of the head motor shuts off. Ensure the studs on the bottom of the head section slightly touch the upper frame.

7. Tighten the screws or nuts (A).
8. Check to see if the head section operates properly.
9. Run the head section to the high position. Ensure the motor shuts off prior to the drive screw meeting its maximum mechanical limits.

4.37 Hilow Limit Switch Adjustment

There is no hilow limit switch adjustment on P8400 model beds. The P8500 model beds have two limit switches that can be adjusted, hilow up and hilow down.

The hilow up, hilow down, Trendelenburg, and Reverse Trendelenburg limit switches are located underneath the intermediate frame, near the foot end of the bed, in separate plastic holders. The hilow up and Reverse Trendelenburg limit switches are housed in the holder nearest the head end of the bed. These limit switches cannot be adjusted independently from each other. If the hilow up limit switch is in adjustment, then the Reverse Trendelenburg limit switch is in adjustment. The hilow down and Trendelenburg limit switches are housed in the other holder. The hilow down and Trendelenburg limit switches cannot be adjusted independently from each other. If the hilow down limit switch is in adjustment, then the Trendelenburg limit switch is in adjustment.

Follow the instructions for the appropriate hilow limit switch.

4.38 Hilow Up Limit Switch Adjustment (P8500 Models Only)

Tools required: Phillips head screwdriver

1. Follow steps 2 through 5 of the section “Motor Cover” on page 4-22.

2. Loosen the two screws (A) that secure the hilow up/Reverse Trendelenburg holder (see figure 4-48 on page 4-86).

Figure 4-48. Hilow Up Limit Switch Location

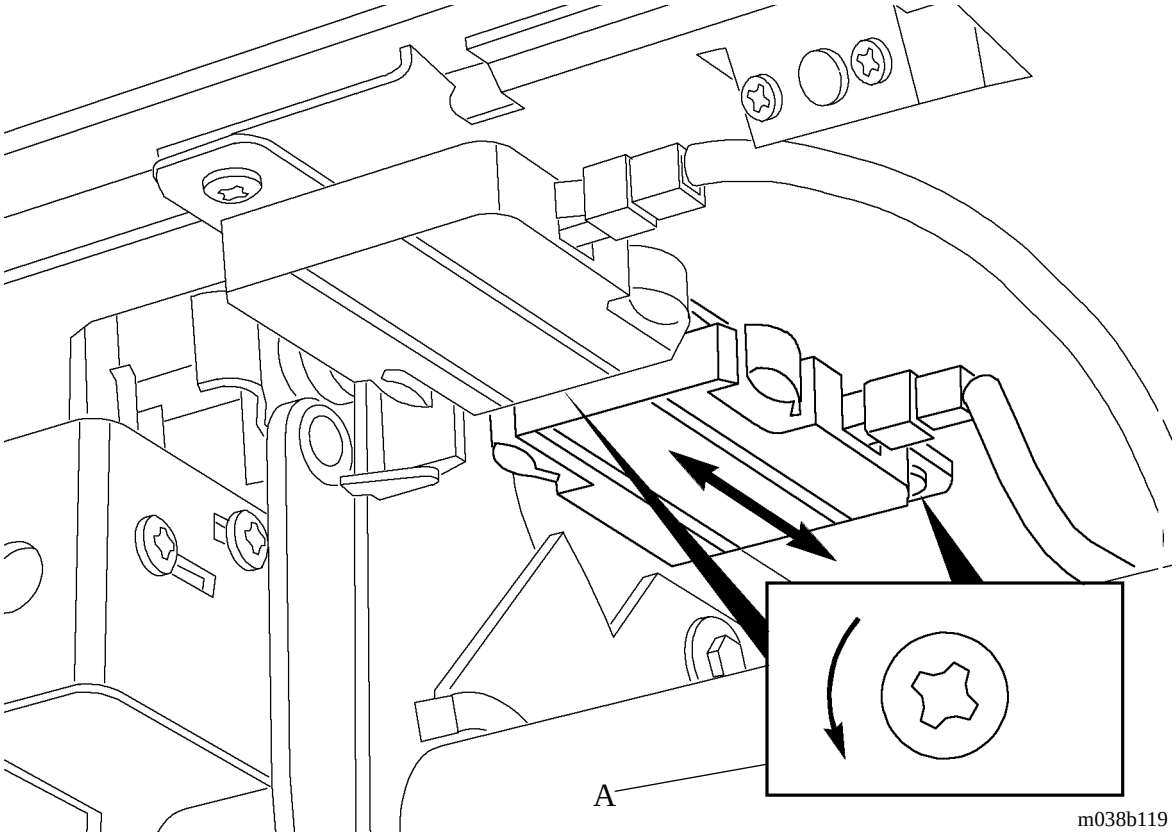

3. Slide the hilow up/Reverse Trendelenburg holder back and forth while running the hilow motor up so that the motor shuts off when there is 5/8" (+ 1/8"/- 0) (1.59 cm), dimension (B), between the hilow drive nut and the end of the threaded portion of the hilow drive screw (see figure 4-49 on page 4-87).

Figure 4-49. Hilow Up/Reverse Trendelenburg Holder

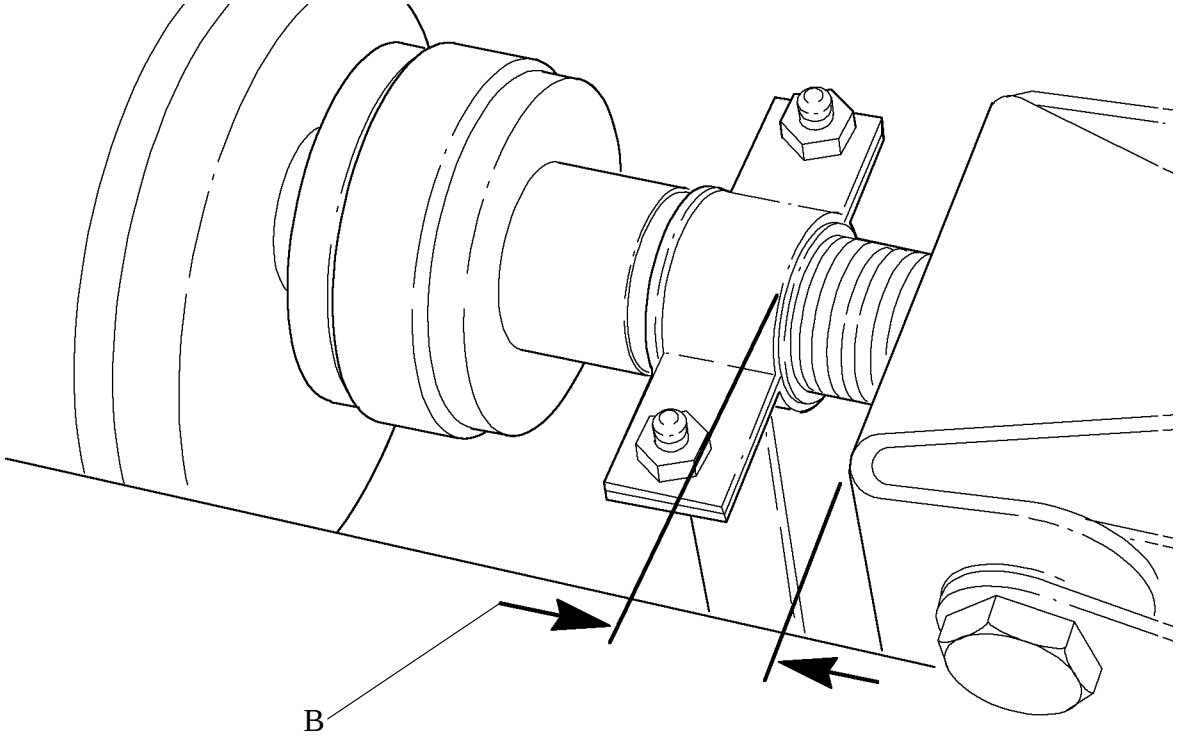

m038b120

NOTE:
This adjustment assures proper alignment for the Trendelenburg hook engagement.

4. Check the hilow up limit to see if it operates properly.

5. Ensure the bed goes into the Trendelenburg position after the adjustments have been made.

4.39 Hilow Down Limit Switch Adjustment (P8500 Models Only)

Tools required: Phillips head screwdriver

1. Follow steps 2 through 5 of the section “Motor Cover” on page 4-22.
2. Use the hilow function, and raise the hilow of the bed 6" (15.2 cm).
3. Loosen the two screws (A) that secure the hilow down/Trendelenburg holder to the bed (see figure 4-50 on page 4-88).

Figure 4-50. Hilow Down Limit Switch Location

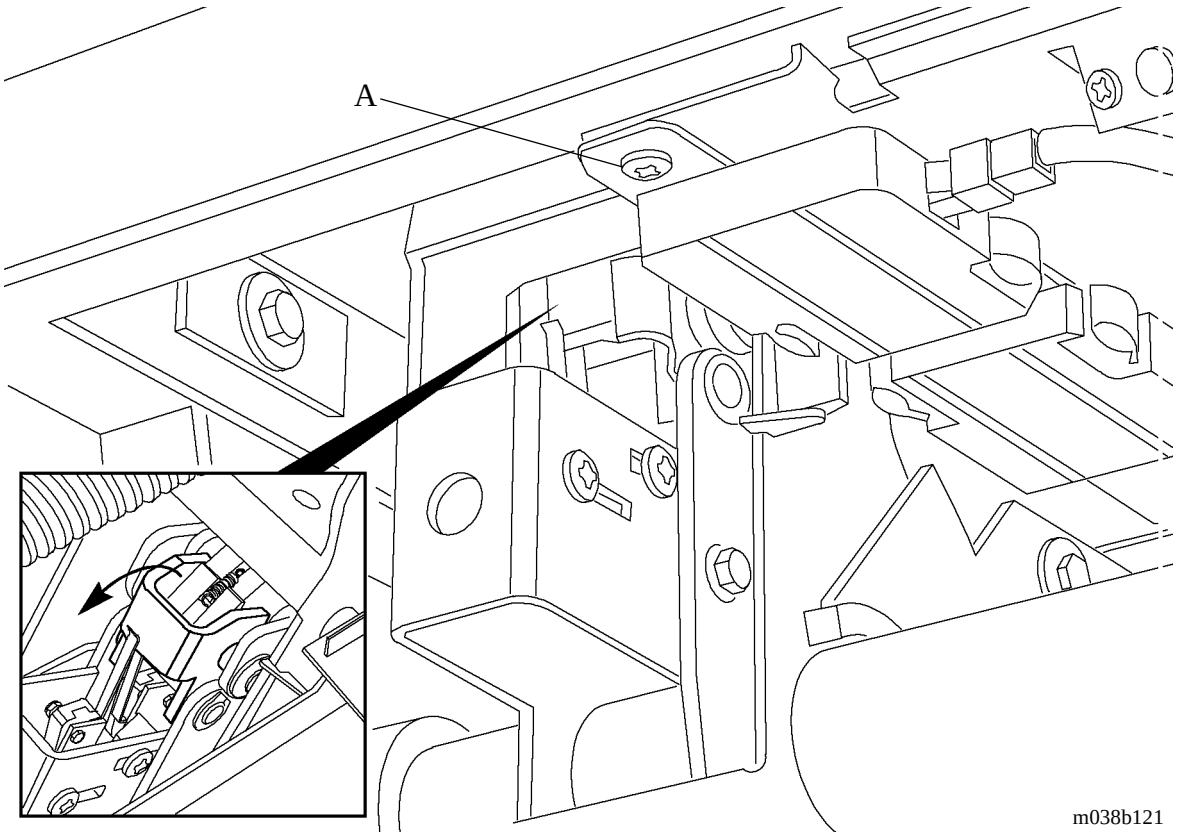

4. Slide the holder as far toward the foot end of the bed as the slots allow.
5. Use the hilow function, and lower the bed until the double lock begins to release when pulled toward the foot end of the bed. Tap the hilow down switch until there is no friction on the double lock.
6. Ensure the lift arms do not crash into the bed frame as a result of mechanical down limit switch failure.
7. Tighten the two screws (A) securing the holder.

8. Check the hilow down limit switch to see if it operates properly.
9. Check the Reverse Trendelenburg function to ensure it operates properly.

4.40 Trendelenburg Limit Switch Adjustment (P8500 Models Only)

See the section “Hilow Down Limit Switch Adjustment (P8500 Models Only)” on page 4-88.

4.41 Reverse Trendelenburg Limit Switch Adjustment (P8500 Models Only)

See the section “Hilow Up Limit Switch Adjustment (P8500 Models Only)” on page 4-86.

4.42 Caster Adjustment

Tools required: T25 torx head screwdriver
5/32" allen wrench

There are two steer casters involved in the adjustment of the locking base system. The foot end caster on the left side of the bed is a brake/steer caster and controls half of the brake feature. The head end caster on the right side of the bed controls the other half of the brake feature. The remaining two casters are basic swivel casters. Both the brake/steer and brake casters must be adjusted. The proper steps of adjustment are as follows:

1. Remove the plastic leg covers (A) over both the brake/steer and the brake casters (see figure 4-51 on page 4-92).

Figure 4-51. Caster Adjustment

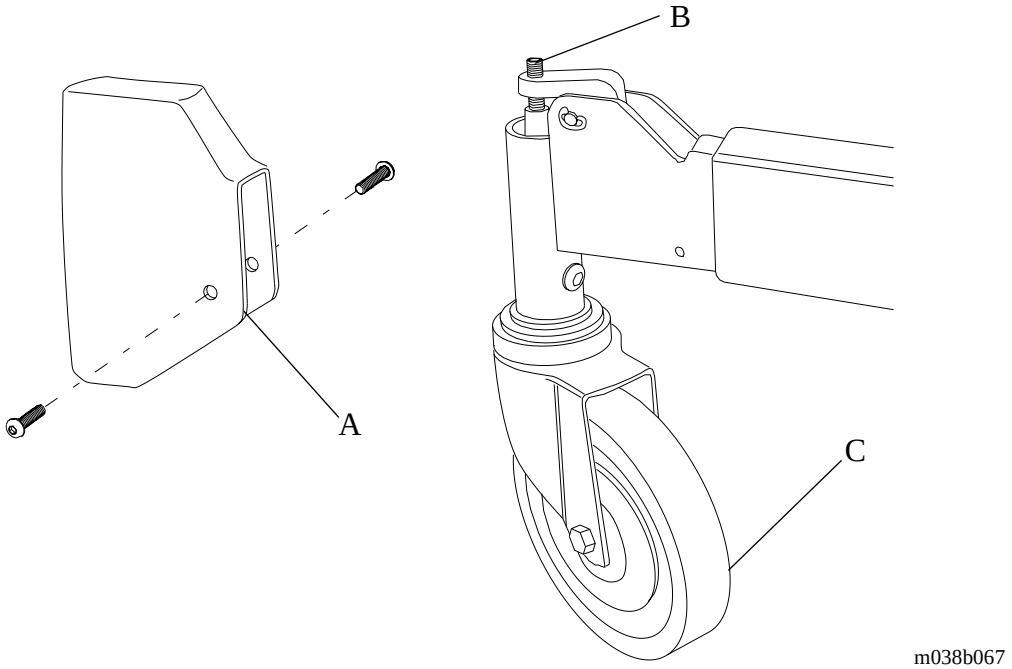

2. Place the brake/steer pedal in the steer position.

3. Locate the setscrews (B) above the casters (C).

4. Turn the setscrew clockwise for the brake/steer caster until it swivels freely. Turn the setscrew a half turn counterclockwise.

5. Place the brake/steer pedal in the brake position.

6. Turn the setscrew counterclockwise for the head brake caster until light brake occurs. Turn the setscrew two additional turns clockwise.

7. Check both casters for proper operation in all positions.

8. Assemble the plastic leg covers.

If the brakes seem to slip after adjustment, there may be floor wax buildup on the tire tread. Periodically clean the tread with the same cleaning solution used to clean the bed.

CAUTION:
Do not use solutions such as turpentine, paint or lacquer thinner, etc. This will deteriorate the caster life and performance.

4.43 Siderails—Hard To Rotate Up Or Down

Tools required: Vise grip or crescent wrench

1. Raise the head section or foot section to the extreme “up” position.

2. If the strap (A) is bent, use a crescent wrench or vise grip to straighten it (see figure 4-52 on page 4-94).

Figure 4-52. Siderails

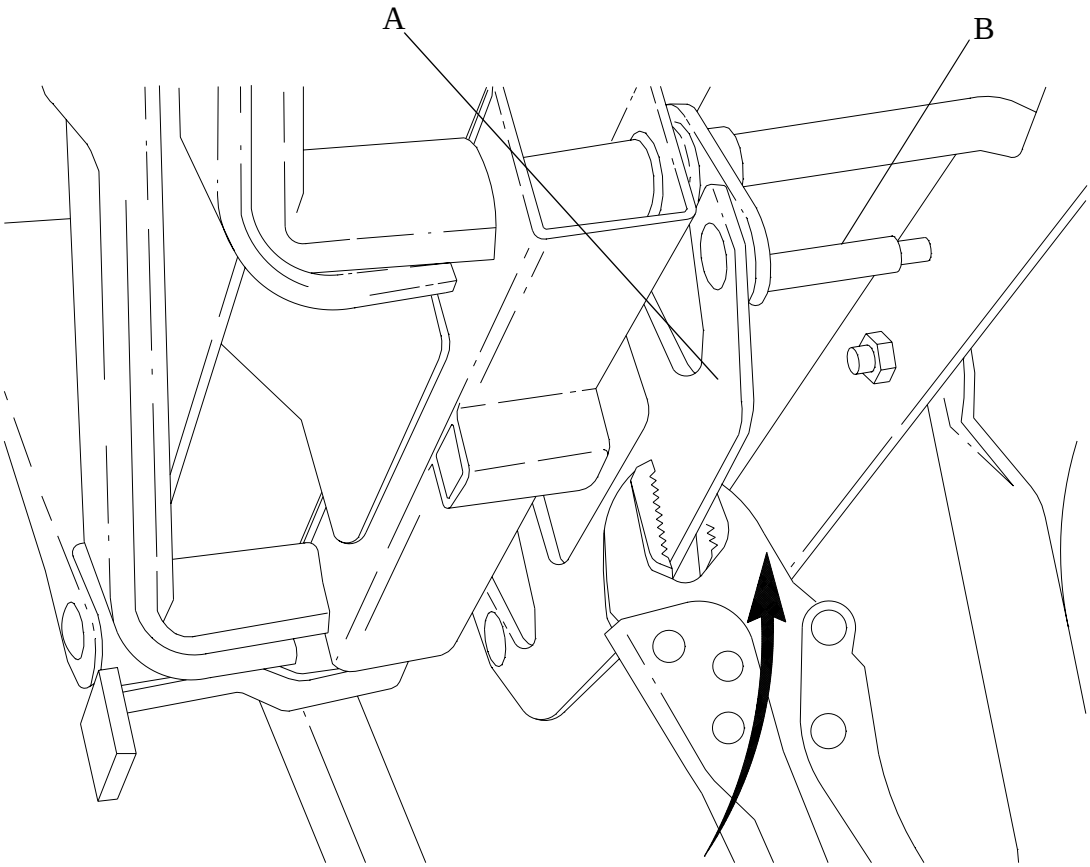

m038b070

3. Make sure the slide rods (B) (black in color) are parallel.

4. Clean and lubricate.

4.44 Siderails—Frozen

Tools required: None

1. Raise the siderail to the up position, or remove the siderail from the bed completely.

2. Apply grease to grease ports (A) (see figure 4-53 on page 4-95).

Figure 4-53. Siderail Lubrication Points

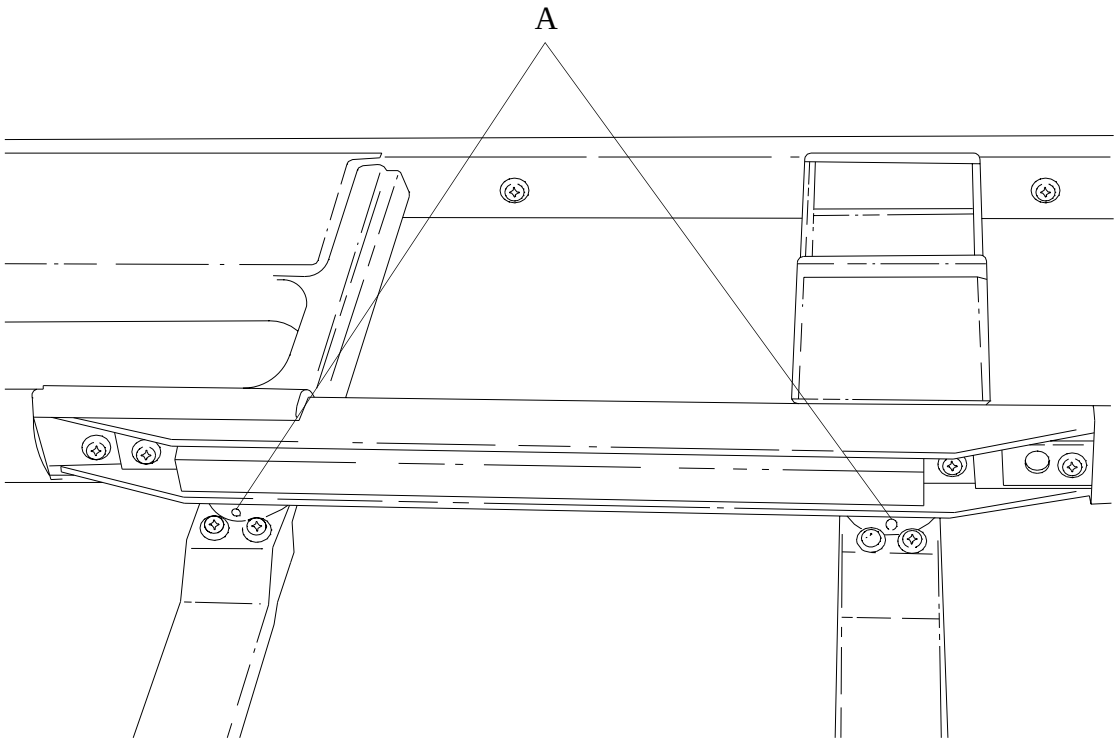

m038b071

NOTES:

Chapter 5
Parts List

Chapter Contents

Warranty . . . . . 5 - 3
Ordering Service Parts . . . . . 5 - 5
Exchange Policy . . . . . 5 - 7
In-Warranty Exchanges . . . . . 5 - 7
Out-of-Warranty Exchanges . . . . . 5 - 7
Recommended Spare Parts List . . . . . 5 - 8
Base—P/N 49210COMM . . . . . 5 - 14
Intermediate Frame Assembly . . . . . 5 - 18
Trendelenburg Assembly (P8500 Models Only) . . . . . 5 - 22
CPR Module—M45785 (P8400 Models Only) . . . . . 5 - 26
CPR Module—M45785 (P8400 Models Only) . . . . . 5 - 28
Nightlight Module—M45782-02 (P8400 Models Only) . . . . . 5 - 32
Sleep Surface Module . . . . . 5 - 34
Pendant Control Assembly—P729A . . . . . 5 - 38
Mattress—P923CD and P923ED . . . . . 5 - 40
Dynamic Sleep Surface—M5038 (P8400 Models)/M5039 (P8500 Models) . . . . 5 - 42
Head and Foot Panel Assemblies—P4069A4/P4048B/P4069A5/P4059 . . . . . 5 - 46
Electrical—P/N 49207COMM . . . . . 5 - 48
Footrail Module—M45873-01 . . . . . 5 - 52
Footrail Module—M45873-04 . . . . . 5 - 54
Headrail Module—49211 . . . . . 5 - 56
Headrail Module . . . . . 5 - 64
Headrail Module (Bed Functions Only) . . . . . 5 - 68

5

Nurse Control Panel—P/N 44135-03/04 . . . . . 5 - 72

Control Box Assembly—P/N 44680-01 . . . . . 5 - 74

Head Motor Without CPR and Drive Unit Assemblies
(P8400 Models Only) . . . . . 5 - 76

Head Motor and Drive Unit Assemblies with CPR
(P8500 Models Only) . . . . . 5 - 80

Knee Motor and Drive Unit Assemblies. . . . . 5 - 84

Hilow Motor and Drive Unit Assemblies . . . . . 5 - 88

P.C. Board Assembly—Integrated Air Support System Board P/N 44047-01 . . 5 - 92

P.C. Board Component Layout—Nightlight with Scale P/N 43200-01
(P8400 Models Only) . . . . . 5 - 96

P.C. Board Component Layout—Nightlight P.C. Board P/N—33577
(P8500 Models Only) . . . . . 5 - 98

P.C. Board Component Layout—Nightlight Assembly P/N 39613-02
(P8500 Models Only) . . . . . 5 - 100

P.C. Board Component Layout—Bed Exit P.C. Board P/N 44482-01 . . . . . 5 - 102

P.C. Board Component Layout—Control Board Assembly P/N 45701
(P8400 Models Only) . . . . . 5 - 104

P.C. Board Component Layout—Control Board Assembly P/N 45789
(P8500 Models Only) . . . . . 5 - 108

P.C. Board Component Layout—Interface Board P/N 44578 . . . . . 5 - 112

5

Warranty

HILL-ROM® COMPANY, INC.
LIMITED WARRANTY

Hill-Rom Company, Inc. (Hill-Rom) has a long tradition of providing superior products and service to our customer. Our goal is “Total Customer Satisfaction”. In that spirit, Hill-Rom is proud to offer the following warranty.

GENERAL WARRANTY (APPLICABLE UNLESS A SPECIFIC WARRANTY IS LISTED)

Hill-Rom warrants to the original purchaser that its products and replacement parts shall be free from defects in material and workmanship for a period of one (1) year from date of delivery. Hill-Rom’s obligation under this warranty is expressly limited to supplying replacement parts and/or service for, or replacing, at its option, any product which is, in the sole discretion of Hill-Rom, found to be defective. In addition to the foregoing one year warranty, Hill-Rom warrants to the original purchaser that the frame and welds on its products will be free from structural defects for the life of the product. Any product upgrade or modification initiated by Hill-Rom does not affect the original product warranty.

SPECIFIC WARRANTIES

MATTRESS WARRANTIES

Hill-Rom warrants to the original purchaser that its mattress product shall be free from defects in material and workmanship for a period of two (2) years from date of delivery. However, electro mechanical mattress components (compressors, valves, printed circuit boards, hoses, and couplers) are covered by the general one (1) year warranty.

EXPENDABLES WARRANTIES

A sixty (60) day limited warranty from date of delivery applies to expendable parts such as cushions, coverlets, software diskettes, locator badge batteries, dome light incandescent bulbs, overhead fluorescent tubes, heating elements, temperature probes, filter sheets, and microspheres. This warranty is limited to replacement of the parts covered.

TO OBTAIN PARTS AND SERVICE

In the United States, call Hill-Rom Technical Support Department at (800) 445-3720, Monday through Friday. In Canada, call Hill-Rom Technical Support Department at (800) 267-2337, Monday through Friday. Outside the United States and Canada, call your authorized Hill-Rom Distributor. In order to expedite service, we request you furnish the following information: customer identification number, product model number, serial number, and description of problem. A qualified specialist will provide, via telephone (United States and Canada), or FAX (Outside the United States and Canada), troubleshooting assistance for facility personnel and provide necessary parts to make repairs. If troubleshooting determines the need for on-site technical service, a qualified service representative will be dispatched. Replacement of non-technical items will be the responsibility of the customer. If requested by Hill-Rom, products or parts for which a warranty claim is made shall be returned prepaid to Hill-Rom’s factory.

OUT OF WARRANTY EXCHANGE POLICY

After the expiration of the original warranty, upon request, Hill-Rom will ship as a replacement, components such as selected: motors and printed circuit boards, for like units returned to Hill-Rom by the original purchaser at a substantial savings. Please call Hill-Rom Technical Support Department for current pricing.

PARTS AVAILABILITY POLICY

Hill-Rom will offer parts for new and remanufactured products for ten (10) years from date of sale; for communications products for five (5) years from date of sale.

Note: Some original component parts and assemblies may not be available; functional equivalents may be substituted.

THE FOREGOING WARRANTIES ARE EXCLUSIVE AND IN LIEU OF ALL OTHER EXPRESS WARRANTIES AND IMPLIED WARRANTIES, INCLUDING BUT NOT LIMITED TO, THE IMPLIED WARRANTIES OF MERCHANTABILITY AND FITNESS OF PURPOSE. HILL-ROM’S OBLIGATION UNDER THESE WARRANTIES SHALL NOT INCLUDE ANY LIABILITY FOR LOSS OF PROFITS, DIRECT, INDIRECT OR CONSEQUENTIAL DAMAGES OR DELAYS. Some states, provinces, or countries do not allow the exclusion or limitation of incidental or consequential damages, so the above exclusion or limitation may not apply. Any improper or negligent use, any alterations or repairs not in accordance with Hill-Rom’s manuals or performed by others in such manner as in Hill-Rom’s sole judgment affects the product materially and adversely, shall void these warranties. These warranties do not cover failures due to misuse, abuse, neglect, or lack of routine maintenance. No employee or representative of Hill-Rom is authorized to change these warranties in any way or grant any other warranty unless in writing and signed by a Hill-Rom officer. These warranties provide specific legal rights; but, there may be other available rights, which vary from state to state, province to province, or country to country.

Revised April 17, 1997

NOTES:

5

Ordering Service Parts

Use the parts lists in this service manual to identify the part numbers you require.

Call your Technical Customer Support Specialist at the Hill-Rom Technical Support Department—phone (800) 445-3720. To help expedite the processing of your parts order, please have your six-digit customer account number, purchase order number, product number, and serial number available for the Technical Customer Support Specialist when you call.

NOTE:
You will find the model and serial number on label (A) at the foot end (B) of the Retractable bed, on the left side of the intermediate frame (C) (see figure 5-1 on page 5-5).

Figure 5-1. Location of Identification Label

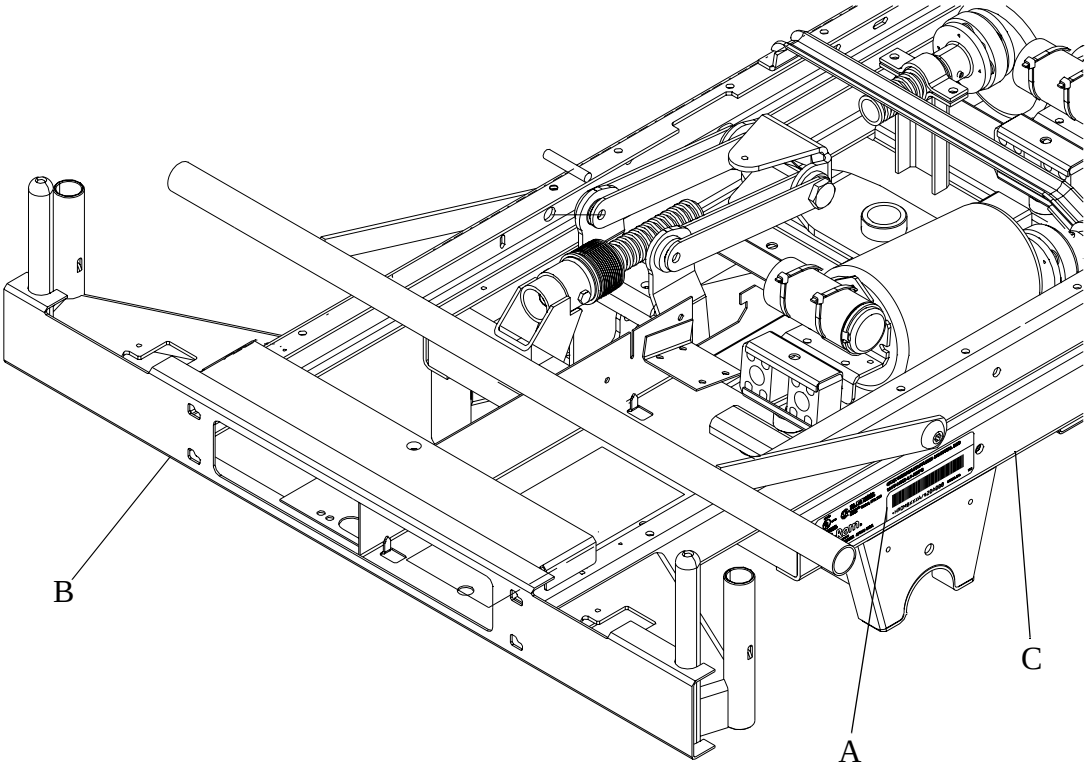

m038b062

For your convenience, Hill-Rom provides a telefax number to promptly order parts, request part prices and availability, or to follow up on a service order. The telefax number is (812) 934-8472.

We suggest a minimum of $40.00 when placing orders for service parts. This will help prevent an increase in the cost of processing your service order.

Terms:

- Net 30 days.
- F.O.B. Batesville, Indiana.
- Shipping charges are prepaid and added to the invoice.
- All service orders are shipped UPS ground, unless you specifically request an alternative method.

Address all inquiries to:

Hill-Rom Company
1069 State Route 46 E
Batesville, Indiana 47006-9167
Attention: Technical Support—Parts

Address all return goods to:

Hill-Rom Company
Distribution Center Door D23
County Road 300E
Batesville, Indiana 47006-9167
Attention: Service Stores

NOTE:
To eliminate possible delays or incorrect billings, **do not** return any items without a Return Material Authorization (RMA) number. A Return Material Authorization packet is included with each order when a return is requested. This packet includes an RMA number, instructions, and a shipping label. If misplaced, obtain an RMA number by phoning the Hill-Rom Technical Support Department at (800) 445-3720.

Exchange Policy

The following are Hill-Rom's policies for in-warranty and out-of-warranty exchanges.

In-Warranty Exchanges

Hill-Rom will request that parts/products be returned for inspection in some cases. When this occurs, you are expected to return parts/products within 30 days. If you fail to return the inoperative parts/products within the 30 day period, Hill-Rom will invoice your facility for the full selling price of the parts/products.

NOTE:
The preceding billing procedure **only** pertains to parts/products that Hill-Rom requests to be returned.

In some cases, the invoice sent with the parts will show the full selling price of the parts. This is for Hill-Rom's internal use only and should not be confused with the price you will actually pay.

Please do not return any parts without an RMA number. Hill-Rom will include a Return Material Authorization packet with the parts/products shipment when parts/products have been requested to be returned. If misplaced, obtain an RMA number by phoning the Hill-Rom Technical Support Department at (800) 445-3720.

Out-of-Warranty Exchanges

You are expected to return the inoperative parts/product to Hill-Rom within 30 days. Hill-Rom will include a Return Material Authorization packet with the parts/products shipment. If misplaced, obtain an RMA number by phoning the Hill-Rom Technical Support Department at (800) 445-3720. If you fail to return the equipment within 30 days, Hill-Rom will invoice your facility for **the difference between the exchange price and the new price of the part**.

Recommended Spare Parts List

Below is a listing of recommended spare parts for the Retractable beds. The quantities are adequate for servicing 25 or more beds.

Table 5-1. Recommended Spare Parts List

Part Number	Quantity	Description
19595S (8485)	2	Switch cam assembly—head
19596S (8485)	2	Switch cam assembly—knee
49208-07B (8485)	1	Hilow motor assembly
49208-06 (8485)	1	Knee motor assembly
36250 (8485)	1	Coupling assembly

Choose the following additional parts based on the model bed that you have.

Table 5-2. Recommended Additional Spare Parts List

Part Number	Quantity	Description
49208-07A (8485)	1	Head motor assembly (P8500 models and P8400 models with CPR only)
45789 (8485)	1	Control board assembly (P8500 models only)
45701-01 (8485)	1	Control board assembly (P8400 models only)
49208-08 (8485)	1	Head motor assembly (P8400 models without CPR)

5

The following is a listing of recommended on hand spare parts for beds that have the integrated air support system.

Table 5-3. Integrated Air Support System

Part Number	Quantity	Description
44047-01 (8485)	2	P.C. board assembly
SA7097 (8485)	2	Ticking—P923CD/ED
38187 (8485)	2	Quick coupling—0.125 male
38189 (8485)	2	Quick coupling—0.250 male
39024 (8485)	2	Quick coupling—0.125 female
39027 (8485)	2	Quick coupling—0.250 female

The following is a listing of recommended on hand spare parts for beds that have the night light.

Table 5-4. Night Light Options

Part Number	Quantity	Description
45782-02 (8485)	1	Night light assembly (P8400 models only)
40217-02 (8485)	1	Night light assembly (P8500 models only/new style)
33577 (8485)	1	Night light assembly (P8500 models only/old style)

The following is a listing of additional spare parts for bed siderails that include bed functions, nurse call, and entertainment.

Table 5-5. Bed Siderails

Part Number	Quantity	Description
44639-02 (8485)	1	Bed function switch assembly—rh
44639-01 (8485)	1	Bed function switch assembly—lh
44637-04 (8485)§	1	Nurse call assembly—rh
44637-03 (8485)§	1	Nurse call assembly—lh
28328 (8485)§	1	Lighting insert blank
44632-04 (8485)§	2	Communication housing assembly—rh

The following is a listing of additional spare parts for bed siderails that include bed functions, nurse call, entertainment, and lighting.

Table 5-6. Bed Siderails

Part Number	Quantity	Description
44639-02 (8485)	1	Bed function switch assembly—rh
44639-01 (8485)	1	Bed function switch assembly—lh
44637-04 (8485)§	1	Nurse call assembly—rh
44637-03 (8485)§	1	Nurse call assembly—lh
44632-04 (8485)§	1	Communication housing assembly—rh

§ Specify dash number if product color is:

-48 Light neutral (off-white)

-33 Taupe (brown)

The following is a listing of additional spare parts for bed siderails that include bed functions, nurse call, entertainment, and bed exit.

Table 5-7. Bed Siderails

Part Number	Quantity	Description
44639-02 (8485)	1	Bed function switch assembly—rh
44639-01 (8485)	1	Bed function switch assembly—lh
44637-04 (8485)§	1	Nurse call assembly—rh
44637-03 (8485)§	1	Nurse call assembly—lh
28328 (8485)§	1	Lighting insert blank
44632-04 (8485)§	1	Communication housing assembly—rh
44632-05 (8485)§	1	Communication housing assembly—lh

The following is a listing of additional spare parts for bed siderails that include bed functions, nurse call, entertainment, and bed exit.

Table 5-8. Bed Siderails

Part Number	Quantity	Description
44639-02 (8485)	1	Bed function switch assembly—rh
44639-01 (8485)	1	Bed function switch assembly—lh
44637-04 (8485)§	1	Nurse call assembly—rh
44637-03 (8485)§	1	Nurse call assembly—lh
28328 (8485)§	1	Lighting insert blank
44632-04 (8485)§	1	Communication housing assembly—rh
44632-05 (8485)§	1	Communication housing assembly—lh

§ Specify dash number if product color is:

-48 Light neutral (off-white)

-33 Taupe (brown)

The following is a listing of additional spare parts for bed siderails that include bed functions, nurse call, and bed exit.

Table 5-9. Bed Siderails

Part Number	Quantity	Description
44639-02 (8485)	1	Bed function switch assembly—rh
44639-01 (8485)	1	Bed function switch assembly—lh
44637-04 (8485)§	1	Nurse call assembly—rh
44637-03 (8485)§	1	Nurse call assembly—lh
28328 (8485)§	1	Lighting insert blank
34454 (8485)§	1	Communication housing blank—rh
44632-07 (8485)§	1	Communication housing assembly—lh

The following is a listing of additional spare parts for bed siderails that include bed functions only.

Table 5-10. Bed Siderails

Part Number	Quantity	Description
44639-02 (8485)	1	Bed function switch assembly—rh
44639-01 (8485)	1	Bed function switch assembly—lh
31273 (8485)§	1	Nurse call insert blank
31274 (8485)§	1	Nurse call insert blank
28328 (8485)§	1	Lighting insert blank
34454 (8485)§	2	Communication housing blank

§ Specify dash number if product color is:

-48 Light neutral (off-white)

-33 Taupe (brown)

NOTES:

Base—P/N 49210COMM

Figure 5-2. Base—P/N 49210COMM

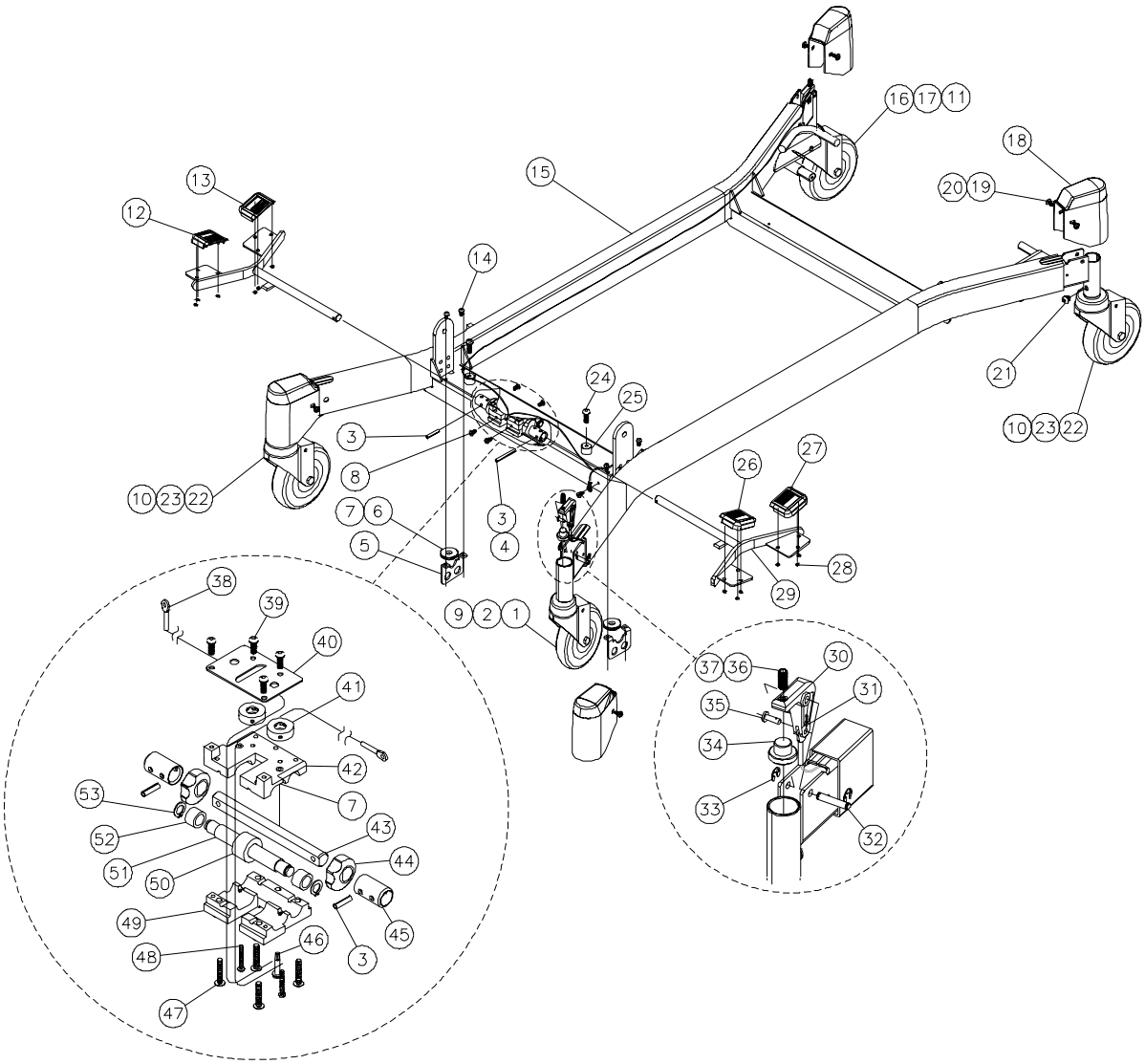

m038b159

5

Table 5-11. Base—P/N 49210COMM

Item Number	Part Number	Quantity	Description
1	45084-56 (8485)	1	Brake/steer caster (5") urethane
2	45084-46 (8485)	1	Brake/steer caster (4")
3	9685 (8485)	1	Roll pin
4	34325 (8485)	1	Roll pin (8500 only)
5	18944 (8485)	2	Pedal bracket
6	18864 (8485)	2	Sheave
7	18919 (8485)	As required	Lithium grease
8	43389 (8485)	4	Hilow torx hilow screw
9	43843 (8485)§	1	Brake/steer caster (5") rubber
10	43841 (8485)§	2	Caster, swivel (5") rubber
11	43842 (8485)§	1	Caster, brake caster (5") rubber
12	34371 (8485)	1	Steer pedal rh
13	92V450 (8485)	1	Brake pedal—rh, red
14	43878 (8485)	4	Torx button head screw
15	34322 (8485)§	1	Base assembly
16	45084-54 (8485)	1	Caster, brake caster (5") urethane
17	45084-44 (8485)	1	Caster, brake caster (4")
18	31113 (8485)§	4	Leg cover
19	4759 (8485)	8	Screw
20	18921 (8485)	8	Screw
21	32572 (8485)	4	Screw
22	45084-50 (8485)	2	Caster, swivel (5") urethane
23	45084-40 (8485)	2	Caster, swivel (4")
24	42143 (8485)	2	Screw
25	40797 (8485)	2	Nylon stud
26	34369 (8485)	1	Steer pedal lh

§ Specify dash number if product color is:

-48 Light neutral (off-white)

-33 Taupe (brown)

Item Number	Part Number	Quantity	Description
27	92V451 (8485)	1	Brake pedal—lh, red
28	17291 (8485)	12	Pushnut
29	32427 (8485)§	2	Pedal assembly
30	34715 (8485)	2	Rocker arm assembly
31	11094 (8485)	2	Cotter pin
32	18862 (8485)	2	Pin
33	18890 (8485)	4	Tru-arc ring
34	31218 (8485)	2	Spacer
35	757 (8485)	2	Connector pin
36	32425 (8485)	2	Setscrew
37	9011811 (8485)	2	Setscrew
38	35175 (8485)	1	Cable assembly
39	42142 (8485)	4	Pan head screw
40	34516 (8485)	1	Stiffener plate
41	18887 (8485)	2	Bearing
42	SA1157 (8485)	1	Block top, adapter screw
43	33360 (8485)	1	Cam shaft
44	43805 (8485)	2	Brake/steer cam
45	18859 (8485)	2	Coupling
46	43879 (8485)	1	Torx button head screw
47	42140 (8485)	4	Screw
48	42141 (8485)	2	Hilow screw
49	42247 (8485)	1	Mechanism block—bottom
50	18863 (8485)	1	Roller
51	43854 (8485)	1	Follower shaft

§ Specify dash number if product color is:

-48 Light neutral (off-white)

-33 Taupe (brown)

Item Number	Part Number	Quantity	Description
52	43844 (8485)	2	Bearing
53	12220 (8485)	2	Retainer ring

Intermediate Frame Assembly

Figure 5-3. Intermediate Frame Assembly

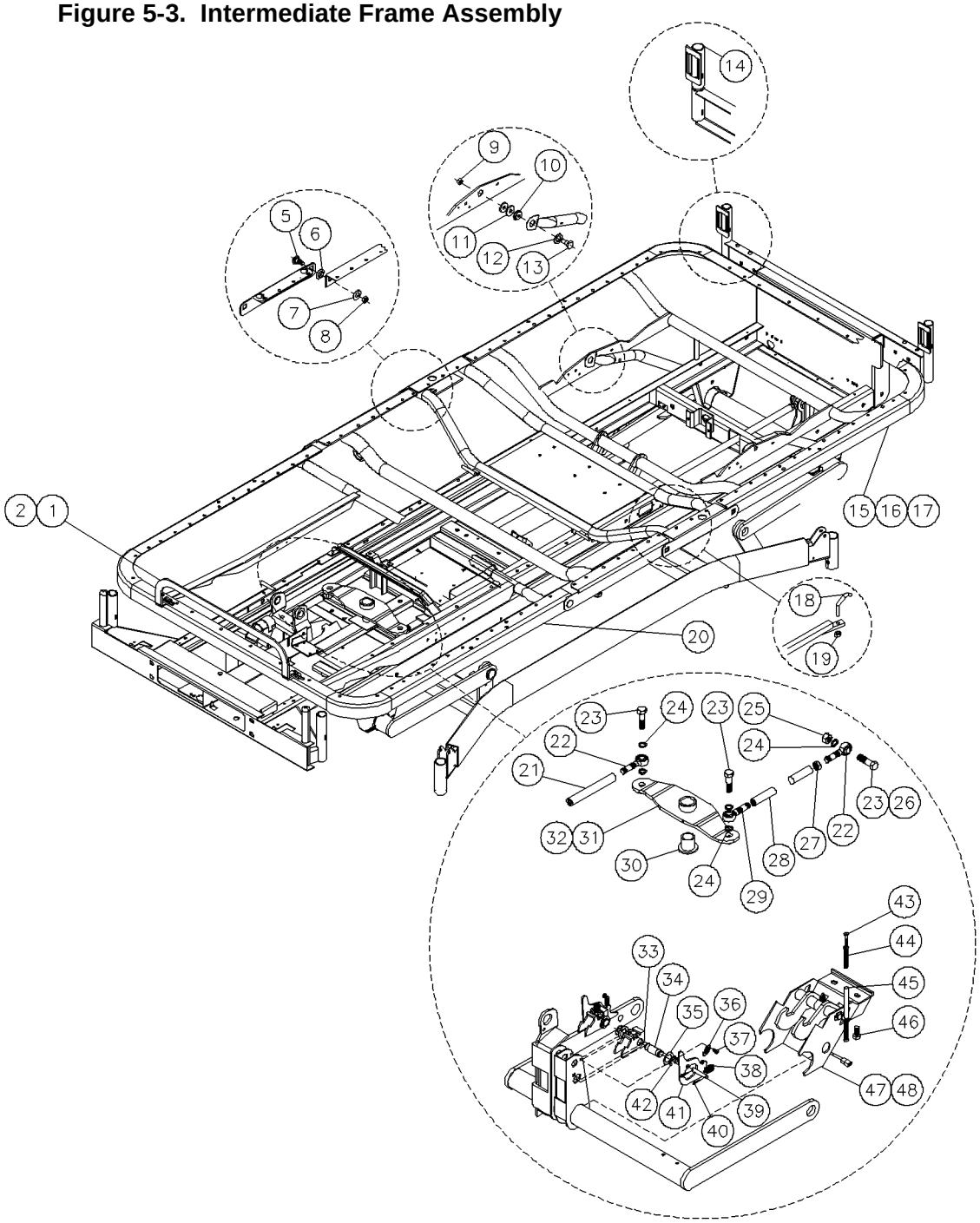

m038b163

5

Table 5-12. Intermediate Frame Assembly

Item Number	Part Number	Quantity	Description
1	39901 (8485)	1	Mattress stop (8500)
2	31185 (8485)	1	Mattress stop (8400)
3			
4			
5	10016 (8485)	4	Shoulder bolt
6	4630 (8485)	4	Oilite bushing
7	4540 (8485)	4	Washer
8	90234 22 (8485)	4	Locknut
9	831 (8485)	2	Locknut
10	19280 (8485)	2	Bushing
11	19918 (8485)	4	Washer
12	10902 (8485)	2	Washer
13	19277 (8485)	2	Shoulder screw
14	48894 (8485)	2	I.V. socket extension
15	46741 (8485)	1	Short head section assembly
16	31840 (8485)	1	NR head section assembly (8500)
17	34481 (8485)	1	Head section assembly (8400)
18	40905 (8485)	1	Link
19	41335 (8485)	1	Nut
20	34493 (8485)	1	Foot and knee section assembly
21	19320 (8485)	1	Tie rod
22	19516 (8485)	2	Rod end rh
23	90021-25 (8485)	2	Hex head machine bolt
24	19905 (8485)	3	Washer
25	2332 (8485)	1	Stop nut
26	19316 (8485)	1	Bolt
27	19766 (8485)	1	Nut
28	19317 (8485)	1	Tie rod long
29	19515 (8485)	1	Rod end lh
30	19281 (8485)	1	Oilite Bushing
31	19309 (8485)	1	Pivot plate assembly (8400)

Item Number	Part Number	Quantity	Description
32	35362 (8485)	1	Pivot plate assembly (8500)
33	19235 (8485)	2	Secondary hook
34	19405 (8485)	2	Pin
35	12860 (8485)	4	Washer
36	22610 (8485)	2	Spring
37	4759 (8485)	2	Screw
38	19604 (8485)	2	Spring
39	19404 (8485)	2	Pin
40	20517 (8485)	4	Cotter pin
41	22603 (8485)	2	Catch
42	19678 (8485)	4	Retaining ring
43	20515 (8485)	1	Screw
44	25669 (8485)	1	Spring
45	20513 (8485)	1	Link
46	90016 12 (8485)	2	Bolt
47	88V027 (8485)	1	Trendelenburg box assembly (8400)
48	35966 (8485)	1	NR Tendelenburg box assembly (8500)

NOTES:

Trendelenburg Assembly (P8500 Models Only)

Figure 5-4. Trendelenburg Assembly (P8500 Models Only)

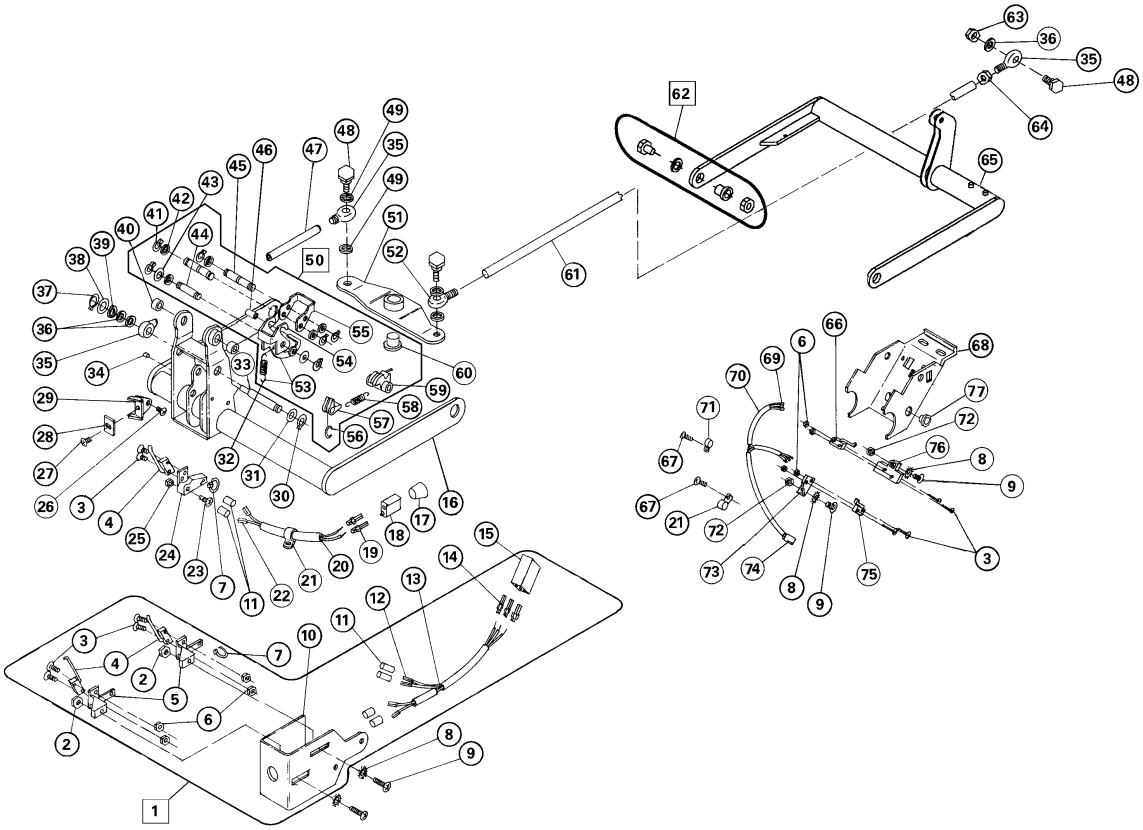

m038030

5

Table 5-13. Trendelenburg Assembly (P8500 Models Only)

Item Number	Part Number	Quantity	Description
1	35960 (8485)§	1	Reverse Trendelenburg switch assembly
2	90133-11 (8485)	2	Nut
3	19555 (8485)	10	Screw
4	40723 (8485)	3	Logic switch
5	35965 (8485)	2	Reverse Trendelenburg mounting block
6	20605 (8485)	8	Locknut
7	14450 (8485)	2	Small cable tie
8	23208 (8485)	3	Lockwasher
9	752 (8485)	4	Screw truss head
10	35944 (8485)	1	Reverse Trendelenburg switch housing
11	14845 (8485)	6	Shrink tubing
12	26068 (8485)	4	Terminal
13	35953 (8485)	1	Reverse Trendelenburg and latch safety cable
14	22153 (8485)	3	Male pin
15	30931 (8485)	1	Plug housing—3 circuit
16	40903 (8485)§	1	Lift arm assembly—foot
17	35060 (8485)	1	Shrink tube
18	30927 (8485)	1	Receptacle housing
19	22154 (8485)	2	Female pin
20	35062 (8485)	1	Latch cable
21	14451 (8485)	2	Cable clamp
22	34307 (8485)	2	Terminal
23	10866 (8485)	1	Screw
24	35056 (8485)	1	Switch mounting block
25	755 (8485)	1	Locknut

§ Specify dash number if product color is:

-48 Light neutral (off-white)

-33 Taupe (brown)

Item Number	Part Number	Quantity	Description
26	23119 (8485)	1	Screw
27	20268 (8485)	1	Screw
28	35101 (8485)	1	Slide
29	35102 (8485)	1	Holder
30	34670 (8485)	1	Retaining ring
31	34679 (8485)	1	Nylon washer
32	86V164 (8485)	1	Spring
33	36214 (8485)	1	Drive pin
34	21913 (8485)	1	Screw, hex head
35	19516 (8485)	3	Rod end—rh
36	19905 (8485)	3	Washer
37	34669 (8485)	1	Retaining ring
38	34678 (8485)	1	Washer
39	34665 (8485)	1	Curved spring washer
40	20832 (8485)	2	Sleeve bearing
41	12220 (8485)	6	Tru-arc ring
42	34663 (8485)	6	Washer
43	34664 (8485)	2	Nylon washer
44	34661 (8485)	1	Lock pin
45	34660 (8485)	2	Pilot/pivot pin
46	36247 (8485)	1	Sleeve cap
47	19320 (8485)	1	Tie rod—short
48	90021-25 (8485)	3	Bolt
49	19905 (8485)	4	Washer
50	SA1244 (8485)	1	Pilot link fix kit
51	35362 (8485)	1	Pivot plate
52	19515 (8485)	1	Rod end—lh
53	SA1252 (8485)	1	Clip and lock assembly, spring
54	36167 (8485)	1	Clip and lock assembly
55	35580 (8485)	1	Pilot link
56	34668 (8485)	1	Retaining ring
57	33916 (8485)	1	Safety

Item Number	Part Number	Quantity	Description
58	34667 (8485)	1	Safety spring
59	35055 (8485)	1	Safety yoke
60	19281 (8485)	1	Oilite bushing
61	19317 (8485)§	1	Rod—long
62	SA1458 (8485)	2	Bushing, bolt, nut, and washer kit
63	2332 (8485)	1	Stop nut
64	19766 (8485)	1	Nut
65	SA1540 (8485)§	1	Lift arm and bolt
66	19512 (8485)	1	Switch
67	4759 (8485)	2	Screw
68	35954-33 (8485)	1	Trendelenburg box and support plate
69	22154 (8485)	6	Female pin
70	35955 (8485)	1	Trendelenburg hook and safety
71	17292 (8485)	1	Cable clamp
72	90133-11 (8485)	1	Nut
73	35964 (8485)	1	Switch mounting bracket
74	30926 (8485)	1	Receptacle housing
75	35943 (8485)	1	Switch
76	30926 (8485)	1	Receptacle housing
77	35943 (8485)	1	Switch

§ Specify dash number if product color is:

-48 Light neutral (off-white)

-33 Taupe (brown)

CPR Module—M45785 (P8400 Models Only)

Figure 5-5. CPR Module—M45785 (P8400 Models Only)

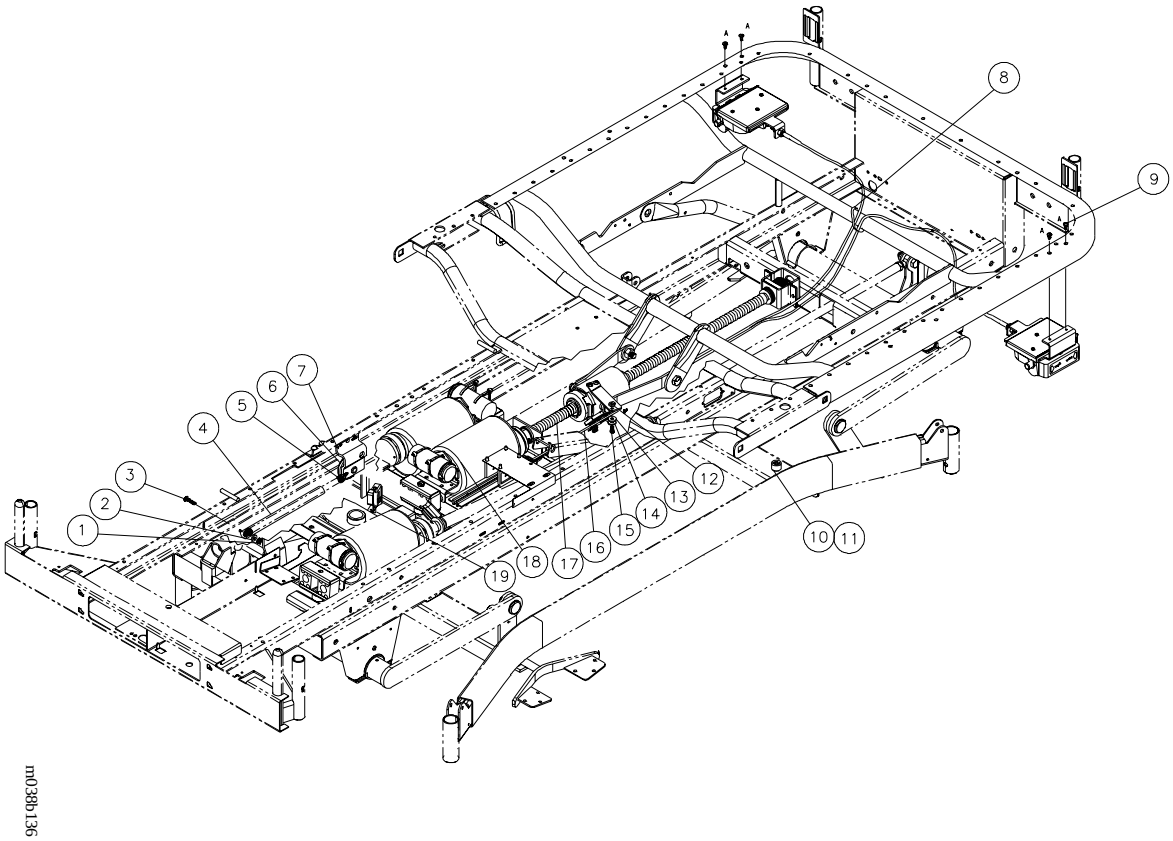

5

Table 5-14. CPR Module—M45785 (P8400 Models Only)

Item Number	Part Number	Quantity	Description
1	28837 (8485)	1	Hex nut
2	10714 (8485)	1	New style washer
3	18920 (8485)	1	Screw
4	34806 (8485)	1	Tube
5	34805 (8485)	1	Extension spring
6	34922 (8485)	1	Roller
7	44075 (8485)	1	Roller bracket assembly
8	19124 (8485)	1	Large cable tie
9	44489 (8485)	4	Six lobe pan head screw
10	40797 (8485)	4	Nylon stud
11	42143 (8485)	4	Screw
12	755 (8485)	1	Locknut
13	29290 (8485)	1	Rubber washer
14	9525 (8485)	1	Washer
15	14399 (8485)	1	Shoulder bolt
16	22847 (8485)	1	Rod
17	45785-ROUT (8485)	1	Head flat screw assembly
18	4920807A (8485)	1	Head motor with CPR
19	25835 (8485)	1	Sleeve

CPR Module—M45785 (P8400 Models Only)

Figure 5-6. CPR Module—M45785 (P8400 Models Only)

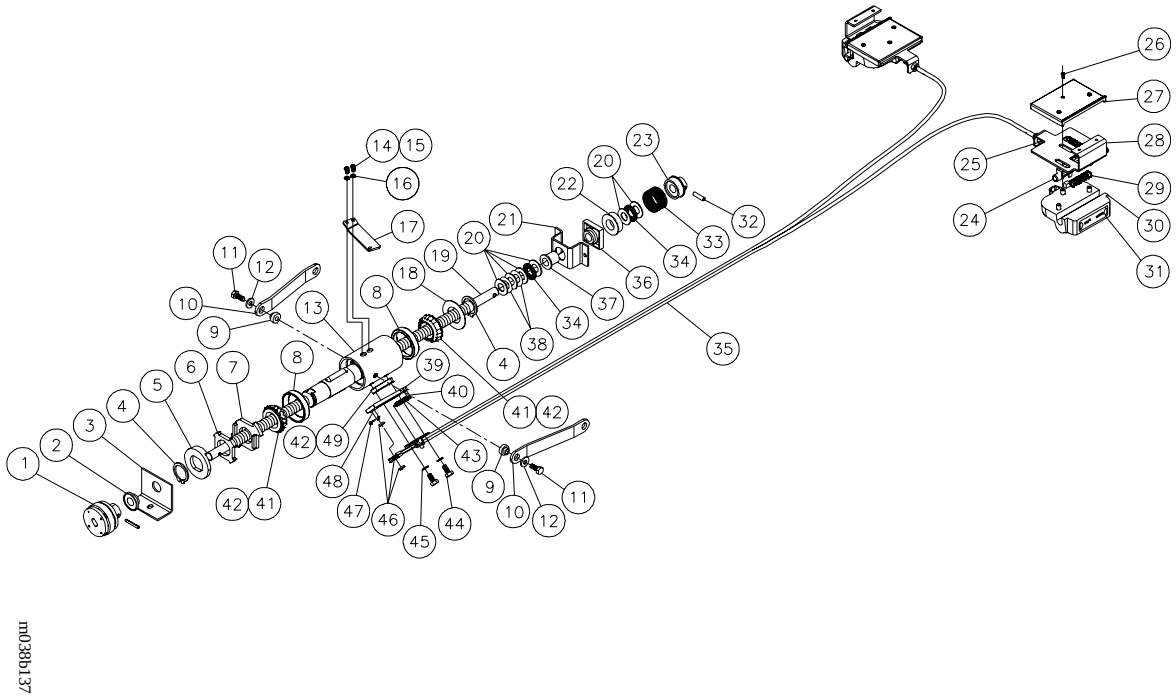

5

Table 5-15. CPR Module—M45785 (P8400 Models Only)

Item Number	Part Number	Quantity	Description
1	36250 (8485)	1	Coupling assembly
2	34613 (8485)	1	Bearing
3	33294 (8485)	1	Head screw bracket
4	34326 (8485)	2	Retaining ring
5	33611 (8485)	1	Hub
6	33613 (8485)	1	Lock pad
7	35504 (8485)	1	Lock hub
8	38069 (8485)	2	Bearing cup
9	33615 (8485)	2	Spacer
10	33621 (8485)	2	Head strap
11	90332-12 (8485)	2	Bolt
12	35667 (8485)	2	Washer
13	38122 (8485)	1	Bearing housing
15	15463 (8485)	2	Bolt
16	23208 (8485)	4	Lockwasher
17	33617 (8485)	1	Limit switch bracket
18	33622 (8485)	1	Bearing spacer
19	42513 (8485)	1	Head flat ball screw
20	11579 (8485)	6	Thrust washer
21	33279 (8485)	1	Head screw bracket
22	37948 (8485)	1	Floating brake drum
23	33316 (8485)	1	Fixed brake lock
24	43317 (8485)	2	Button, CPR release
25	37232 (8485)	2	Hex nut
26	43389 (8485)	10	Hilow torx screw
27	43319 (8485)	2	Top cover—CPR release
28	43320 (8485)	2	Mounting plate—CPR release
29	34418 (8485)	4	Compression spring
30	43318 (8485)	2	Handle—CPR release
31	43338 (8485)	2	Label—CPR release
32	12434 (8485)	1	Roll pin

Item Number	Part Number	Quantity	Description
33	28082 (8485)	1	Brake spring
34	11578 (8485)	2	Thrust bearing
35	45713 (8485)	1	CPR release cable assembly
36	33280 (8485)	1	Bearing end
37	42212 (8485)	1	Bushing
38	31556 (8485)	2	Wave washer
39	33836 (8485)	1	Latch
40	34638 (8485)	1	Groove pin
41	38070 (8485)	2	Bearing cone
42	SA3351(8485)	As required	Lithium grease
43	33618 (8485)	1	Spring
44	90332-10 (8485)	2	Bolt
45	42066 (8485)	2	Safety washer
46	10714 (8485)	3	New style washer
47	20517 (8485)	1	Cotter pin
48	45784 (8485)	1	Stud grooved pin
49	33835 (8485)	1	Latch guide

NOTES:

Nightlight Module—M45782-02 (P8400 Models Only)

Figure 5-7. Nightlight Module—M45782-02 (P8400 Models Only)

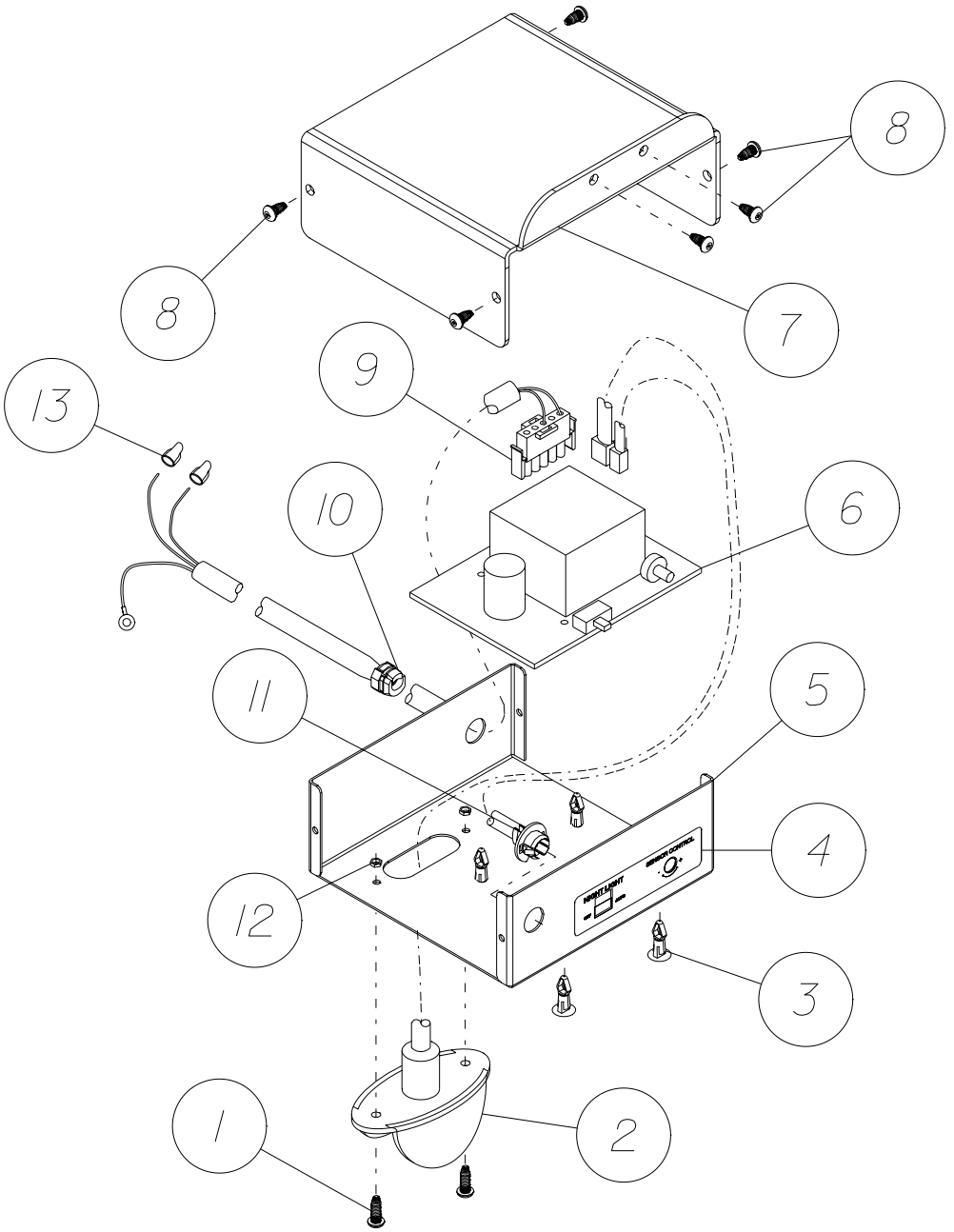

m038b012

Table 5-16. Nightlight Module—M45782-02 (P8400 Models Only)

Item Number	Part Number	Quantity	Description
1	43879 (8485)	2	Torx button head screw
2	43166 (8485)	1	Nightlight assembly
3	39763-02 (8485)	4	Standoff
4	43412 (8485)	1	Nightlight label
5	45779-48 (8485)	1	Nightlight bottom cover
6	43200-01 (8485)	1	Nightlight with scale
7	45780-48 (8485)	1	Nightlight top cover
8	43878 (8485)	6	Torx button head screw
9	45925-02 (8485)	1	Nightlight jumper cable
10	22988 (8485)	1	Strain relief
11	43671-01 (8485)	1	Nightlight sensor and cable assembly
12	28837 (8485)	2	Hex nut
13	32741 (8485)	2	Wire joint

Sleep Surface Module

Figure 5-8. Sleep Surface Module

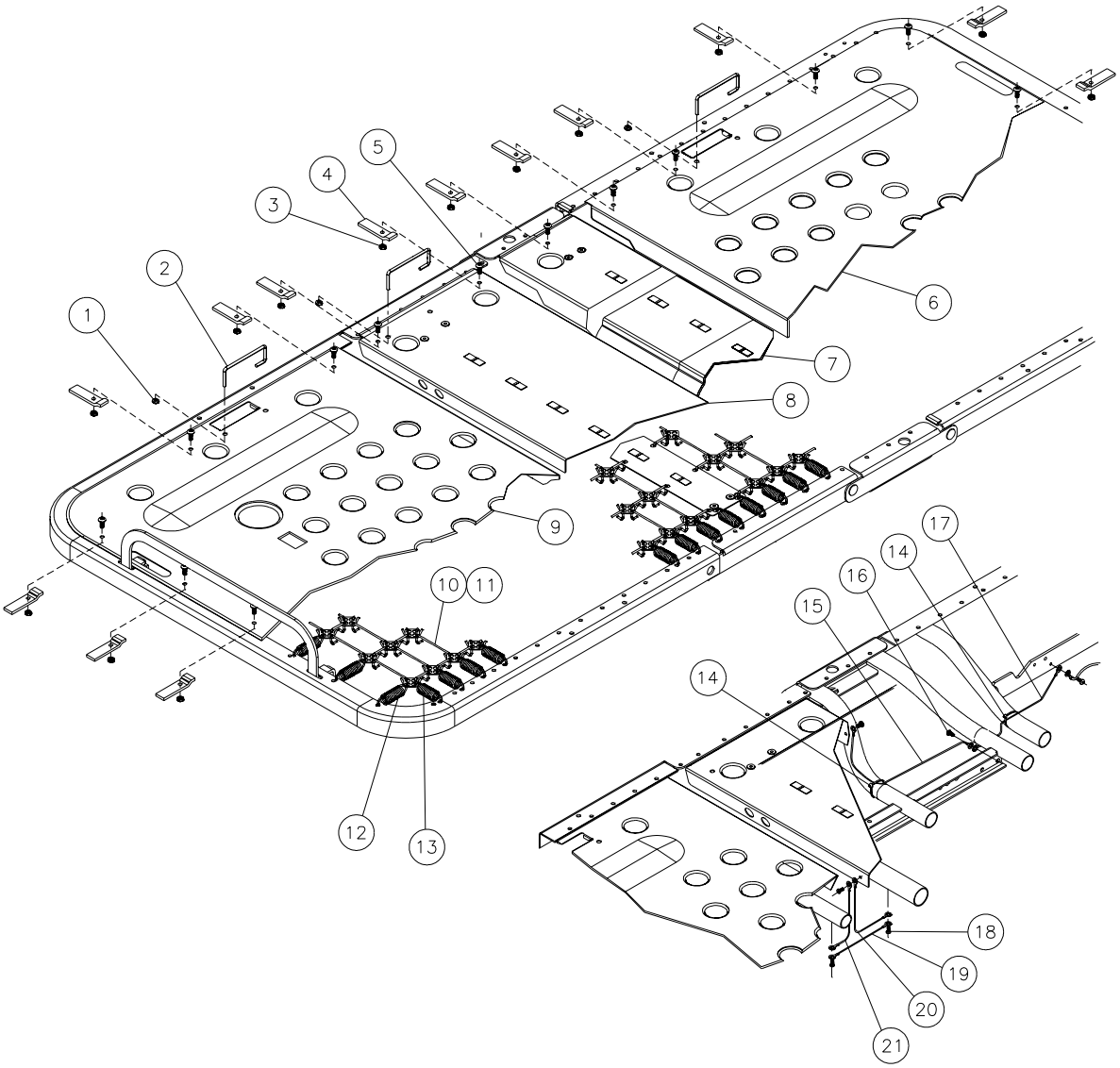

m038b146

5

Table 5-17. Sleep Surface Module

Item Number	Part Number	Quantity	Description
1	755 (8485)	6	Locknut
2	20544 (8485)	6	Restraint bracket
3	20802 (8485)	25	Keps nut
4	20223 (8485)	25	Lock
5	43880 (8485)	25	Torx pan head screw
6	38221-33 or 3822 0148 (8485)	1	Head panel
7	45886 (8485)§	1	Seat pan
8	38223-33 or 382230148 (8485)	1	Knee pan
9	38222-33 or 382220248 (8485)	1	Foot panel
10	12084WSpl (8485)	1	Fabric assembly
11	34338 (8485)	1	Fabric assembly—bed exit
12	34531 (8485)	21	Helical spring
13	34532 (8485)	71	Helical spring
14	19124 (8485)	2	Large cable tie
15	4565818 (8485)*	1	Ground strap assembly
16	4759 (8485)	1	Screw
17	4565807 (8485)*	1	Ground strap assembly
18	43878 (8485)	4 or 3	Torx button head screw
19	4565817 (8485)*	1	Ground strap assembly

§ Specify dash number if product color is:

-48 Light neutral (off-white)

-33 Taupe (brown)

NOTE:
*There may be vintage beds that these ground strap assemblies are not used on.

Item Number	Part Number	Quantity	Description
20	4565805 (8485)*	1	Ground strap assembly
21	4565806 (8485)*	1	Ground strap assembly

NOTE:
*There may be vintage beds that these ground strap assemblies are not used on.

NOTES:

Pendant Control Assembly—P729A

Figure 5-9. Pendant Control Assembly—P729A

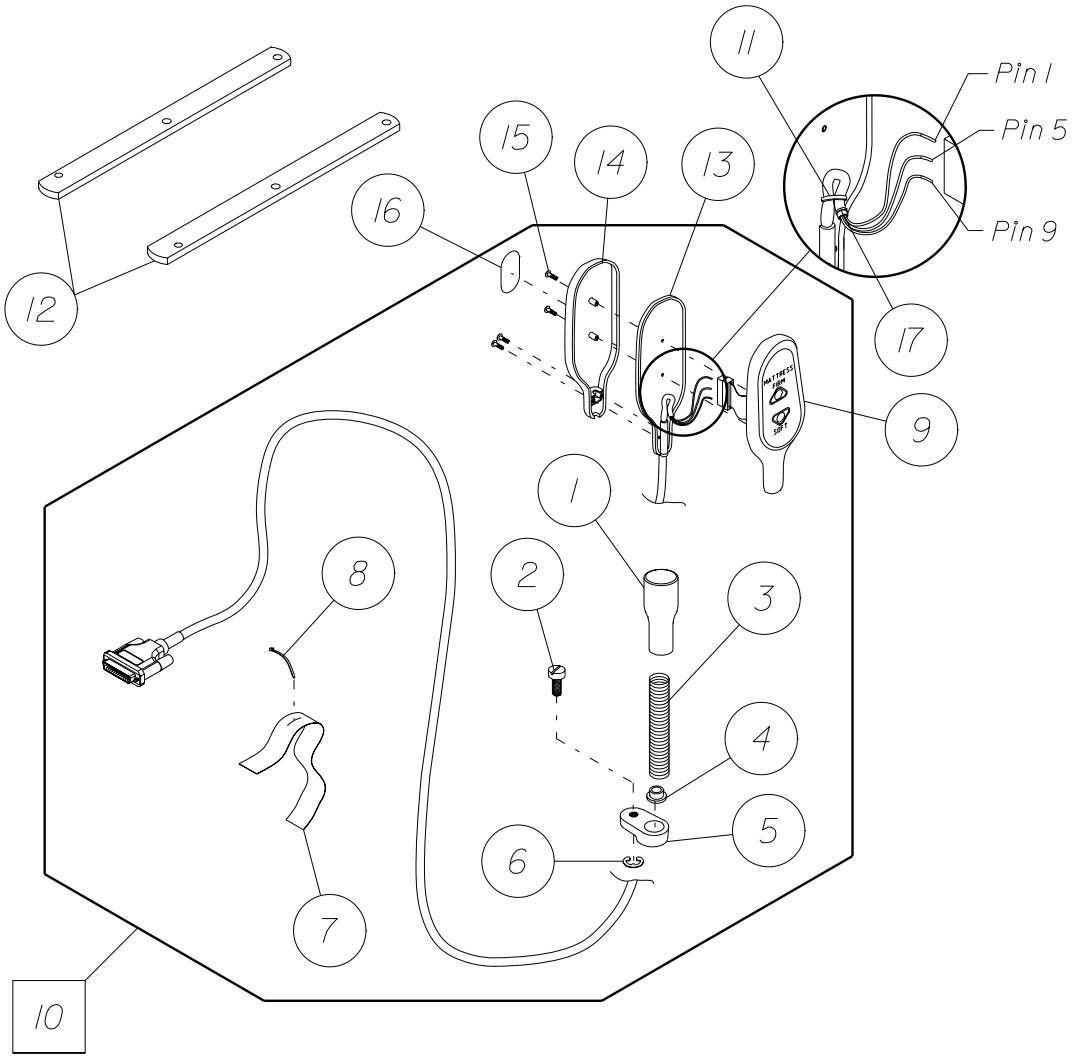

m038b032

Table 5-18. Pendant Control Assembly—P729

Pin Number	Function	Wire Color
1	Soft	Black
5	Common	White
9	Firm	Red

Table 5-19. Pendant Control Assembly—P729A

Item Number	Part Number	Quantity	Description
1	SA4519 (8485)	1	Pendant holder top
2	SA7087 (8485)	1	Thumbscrew
3	SA4516 (8485)	1	Pendant sleeve
4	SA7089 (8485)	1	Rubber grommet
5	SA7088 (8485)	1	Pendant holder
6	SA7091(8485)	1	C-ring
7	43615 (8485)	1	Velcro strap
8	19124 (8485)	1	Large cable tie
9	SA7346 (8485)	1	Pendant control—front
10	P729 (8485)	1	Pendant control assembly
11	SA7347 (8485)	1	Cable tie
12	44566 (8485)§	2	Pendant mount
13	SA7337 (8485)	1	Compression boot
14	SA7338 (8485)	1	Pendant control—back
15	SA7339 (8485)	4	Screw
16	SA7340 (8485)	1	Label
17	SA7341 (8485)	1	Cable tie

§ Specify dash number if product color is:

-48 Light neutral (off-white)

-33 Taupe (brown)

Mattress—P923CD and P923ED

Table 5-20. Mattress—P923CD and P923ED

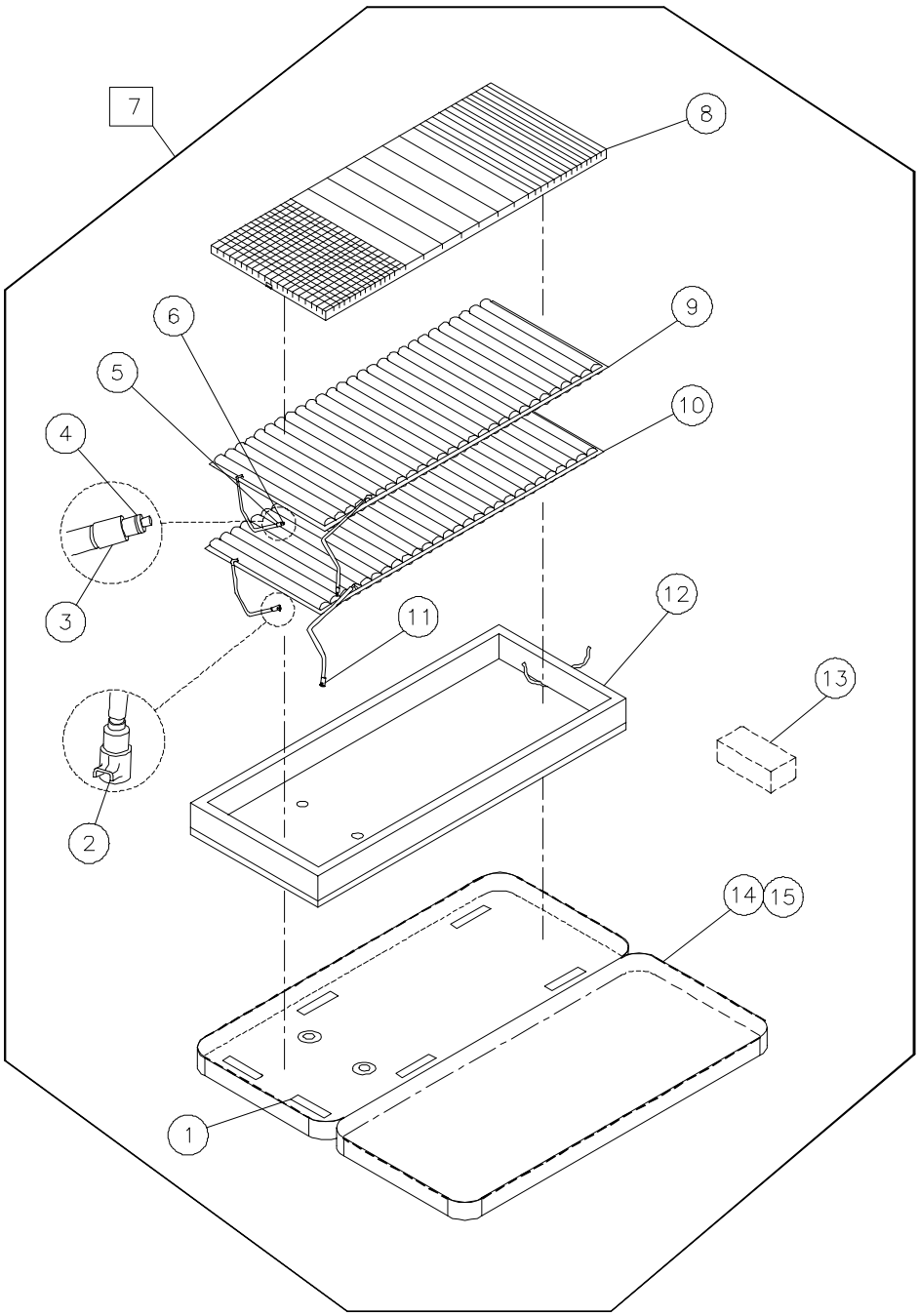

m038b009

Table 5-21. Mattress—P923CD and P923ED

Item Number	Part Number	Quantity	Description
1	SA4589 (8485)	6	Magnet
2	SA4462 (8485)	1	Female coupling—sleep surface
3	SA4461 (8485)	1	Male coupling—sleep surface
4	SA4584 (8485)	1	Large O-ring
5	SA4463 (8485)	1	Male coupling—sleep surface
6	SA4583 (8485)	1	Small O-ring
7	923CD or 923ED (8485)	1	Mattress
8	SA4908 (8485)	1	Top foam
9	SA4449 (8485)	1	Top bladder assembly
10	SA4450 (8485)	1	Bottom bladder assembly
11	SA4464 (8485)	1	Female coupling—sleep surface
12	SA4839 (8485)	1	Bottom foam
13	SA4927 (8485)	1	Mattress liner
14	SA7099 (8485)	1	Top foam and ticking
15	SA8612 (8485)	1	Mattress ticking without liner

Dynamic Sleep Surface—M5038 (P8400 Models)/M5039 (P8500 Models)

Figure 5-10. Dynamic Sleep Surface—M5038 (P8400 Models)/M5039 (P8500 Models)

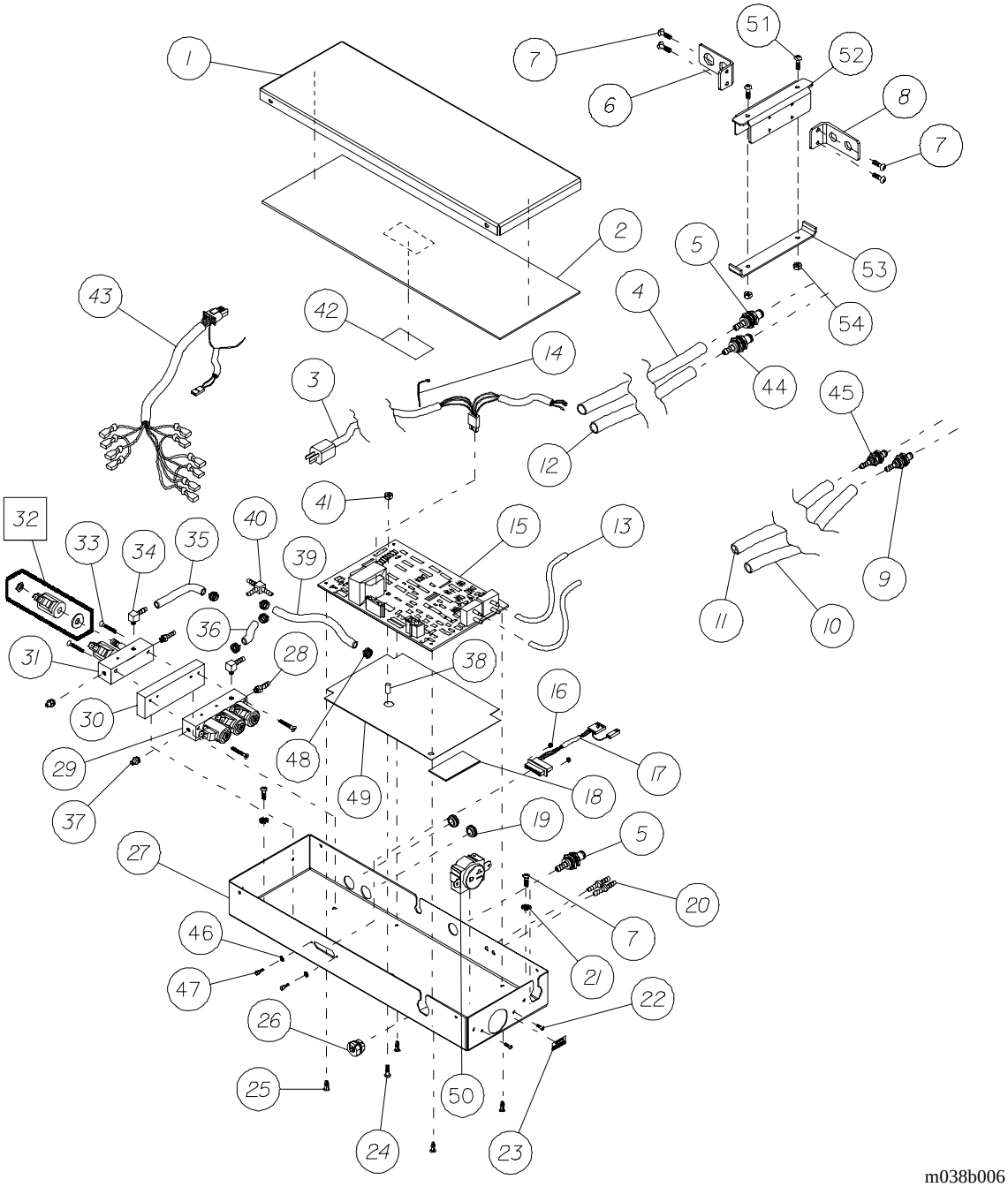

5

Table 5-22. Air Surface Module—M5038 (P8400 Models)/M5039 (P8500 Models)

Item Number	Part Number	Quantity	Description
1	44549 (8485)§	1	Manifold cover
2	44616 (8485)	1	Cover insulator
3	44610-01 (8485)	1	Power cable assembly
4	38197-03 (8485)	1	Fill tube—red
5	38189 (8485)	2	Quick coupling—(large) male
6	44568 (8485)	1	Coupling bracket
7	18921 (8485)	6	Screw
8	44567 (8485)	1	Coupling bracket
9	38187 (8485)	1	Quick coupling—(small) male
10	42734-05 (8485)	1	Sense hose—red
11	42734-06 (8485)	1	Sense hose—blue
12	38197-04 (8485)	1	Fill tube—blue
13	44527 (8485)	2	Flex hose
14	19124 (8485)	1	Large cable tie
15	44047-01 (8485)	1	P.C. board assembly
16	28965 (8485)	2	Nut
17	44622 (8485)	1	Pendant cable assembly
18	44693 (8485)	1	Mylar insulator
19	42743-03 (8485)	2	Grommet
20	42741 (8485)	2	Hose splice
21	23208 (8485)	2	Lockwasher
22	4577 (8485)	2	Screw
23	44618 (8485)	1	Caution label
24	18920 (8485)	1	Screw
25	39763-01 (8485)	4	Standoff

§ Specify dash number if product color is:

-48 Light neutral (off-white)

-33 Taupe (brown)

Item Number	Part Number	Quantity	Description
26	16145 (8485)	1	Strain relief
27	44548 (8485)§	1	Manifold box
28	38288 (8485)	2	Straight fitting
29	44612 (8485)	1	Valve manifold—upper
30	44550 (8485)	1	Manifold bracket
31	44613 (8485)	1	Valve manifold—lower
32	SA4475 (8485)	5	Solenoid
33	28619 (8485)	4	Screw
34	38287 (8485)	2	Elbow—90 degrees
35	42731-06 (8485)	1	Solenoid hose—lower inlet
36	42731-05 (8485)	1	Solenoid hose—upper inlet
37	38289 (8485)	2	Relief valve
38	44724 (8485)	1	Standoff spacer
39	42731-04 (8485)	1	Solenoid hose—compression inlet
40	39507 (8485)	1	Connector tee
41	28837 (8485)	1	Hex nut
42	22247 (8485)	1	Caution label
43	44611 (8485)	1	Manifold wire assembly
44	39024 (8485)	1	Quick coupling—(large) female
45	39027 (8485)	1	Quick coupling—(small) female
46	28970 (8485)	2	Lockwasher
47	42006 (8485)	2	Screw lock
48	38296 (8485)	5	Hose clamp
49	44101 (8485)	1	Insulator—air control box
50	44725 (8485)	1	Outlet, single 15 amp

§ Specify dash number if product color is:

-48 Light neutral (off-white)

-33 Taupe (brown)

Item Number	Part Number	Quantity	Description
51	21230 (8485)	2	Screw
52	44546 (8485)	1	Connector clamp
53	44545 (8485)	1	Connector clamp
54	15250 (8485)	2	Locknut

Head and Foot Panel Assemblies—P4069A4/P4048B/P4069A5/P4059

Figure 5-11. Head and Foot Panel Assemblies—P4069A4/P4048B/P4069A5/P4059

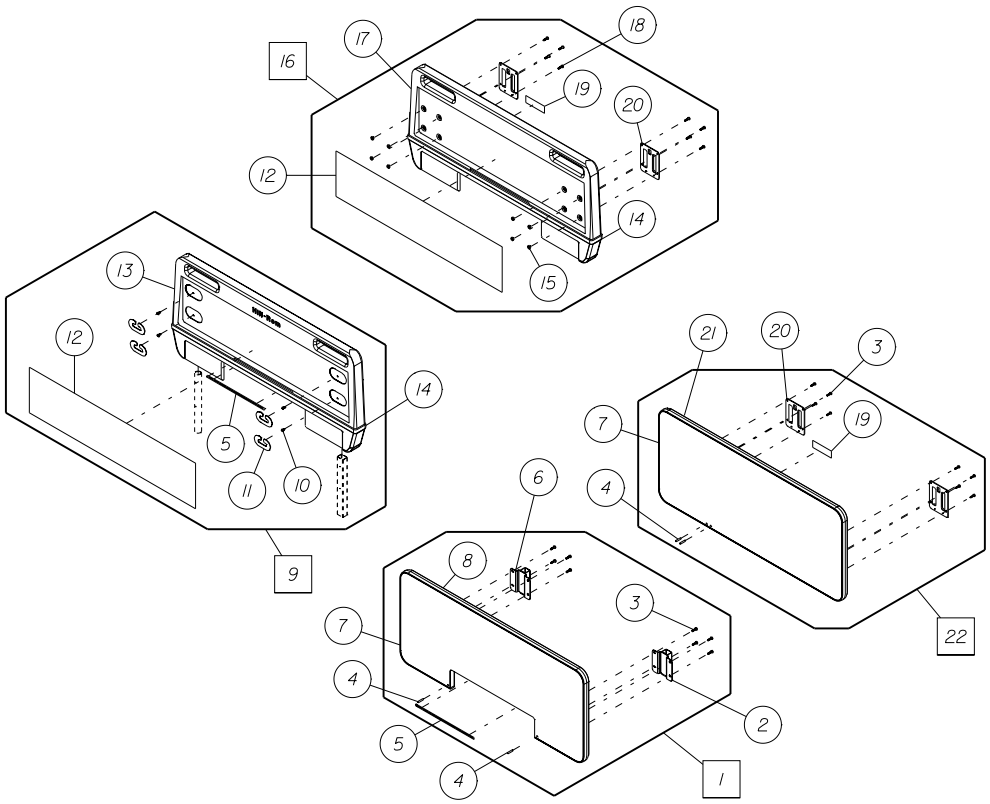

m038b011

Table 5-23. Head and Foot Panel Assemblies—P4069A4/P4048B/P4069A5/P4059

Item Number	Part Number	Quantity	Description
1	4069A5 (8485)*	1	Foot panel assembly
2	44317-01 (8485)	1	Support tube assembly
3	31773 (8485)	8	Screw
4	31907 (8485)	2	Headless pin
5	40310-01 (8485)	1	Caution label
6	44317-02 (8485)	1	Support tube assembly
7	43149 (8485)	1	Trim
8	44318 (8485)*	1	Foot panel cutout
9	4059 (8485)*	1	Foot panel assembly
10	43878 (8485)	1	Torx button head screw
11	43408 (8485)	4	Cover plate
12	34807 (8485)*	1 or 2	H.P.L. insert
13	43115 (8485)§	1	Foot panel
14	43117-33 (8485)	1	Bumper
15	39427 (8485)	8	Nut
16	4048B (8485)*	1	Head/foot panel assembly
17	38151 (8485)	1	Bed panel assembly
18	17290 (8485)	8	Mounting screw
19	34813 (8485)	1	Label
20	39153 (8485)	2	Panel bracket—4 hole
21	112416 (8485)*	1	Foot panel
22	4069A4 (8485)*	1	Head panel assembly

* Specify high pressure laminate color.

§ Specify dash number if product color is:

-48 Light neutral (off-white)

-33 Taupe (brown)

Electrical—P/N 49207COMM

Figure 5-12. Electrical—P/N 49207COMM

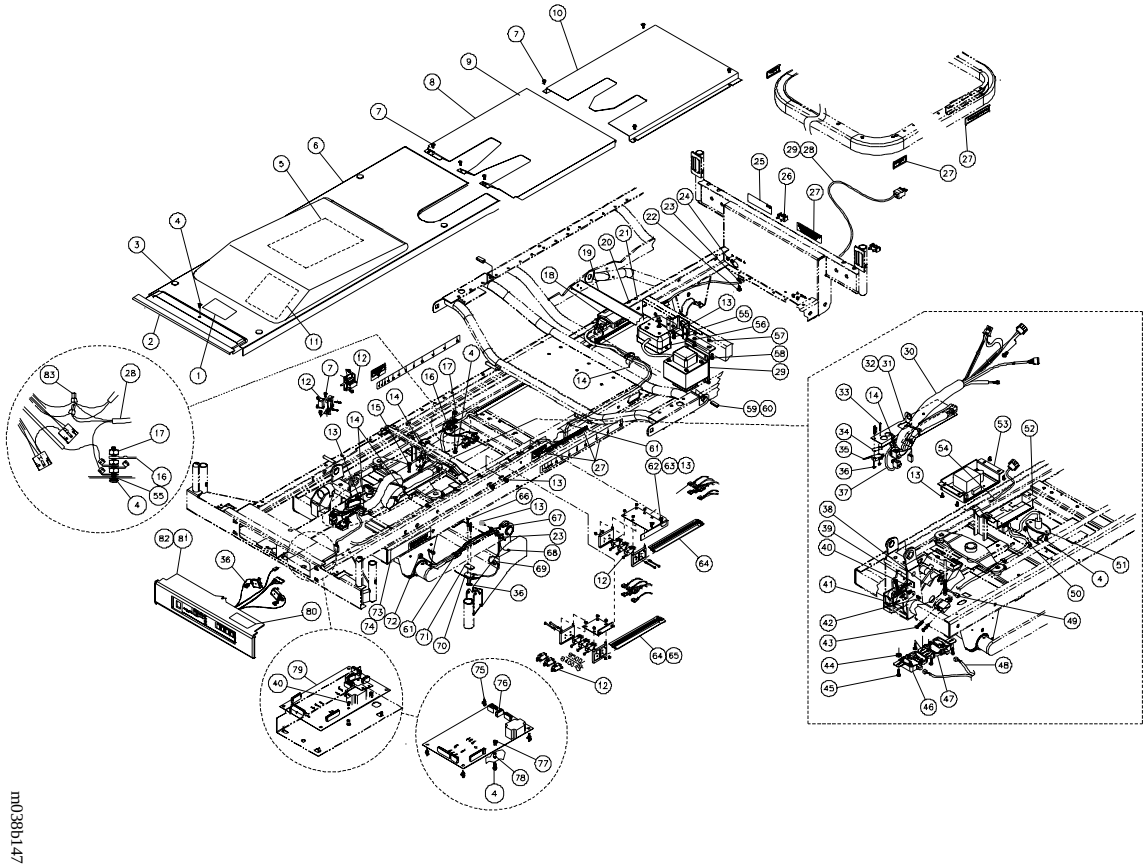

5

Table 5-24. Electrical—P/N 49207COMM

Item Number	Part Number	Quantity	Description
1	22247 (8485)	1	Caution label
2	33354 (8485)	1	Foot cover gasket
3	44064 (8485)	4	Stop bumper
4	43879 (8485)	2	Torx button head screw
5	45926 (8485)	1	Wiring diagram
6	33352 (8485)§	1	Top cover foot
7	4759 (8485)	7	Screw
8	33856 (8485)	1	Sliding cover
9	22646 (8485)	3	Felt pad
10	19539 (8485)	1	Stationary cover assembly
11	49771 (8485)	1	Insulator
12	19512 (8485)	2	Switch
13	43878 (8485)	3	Torx button head screw
14	19124 (8485)	5	Large cable tie
15	4739 (8485)	1	Bolt
16	36114 (8485)	1	Cable tie with hole
17	28837 (8485)	3	Hex nut
18	45896 (8485)	1	Bed control cable assembly
19	45669 (8485)§	1	Testport bracket
20	42006 (8485)	2	Screw lock
21	28967 (8485)	2	Screw
22	18252 (8485)	1	Screw
23	25200 (8485)	1	Speed clamp
24	29788 (8485)	4	Twist nut
25	39364 (8485)	1	Caution, label

§ Specify dash number if product color is:

-48 Light neutral (off-white)

-33 Taupe (brown)

Item Number	Part Number	Quantity	Description
26	21341 (8485)	2	Cord holder
27	45729 (8485)	1	Label group Retracting
28	4067001 (8485)	1	Cord set assembly
29	95V095 (8485)	1	Power cord with transformer assembly
30	45918 (8485)	1	Power limit cable assembly
31	38261 (8485)	1	Limit cable bracket
32	20532 (8485)	1	Bracket
33	19555 (8485)	2	Screw
34	22251 (8485)	1	Insulator
35	20534 (8485)	1	Switch
36	20605 (8485)	2	Locknut
37	45992 (8485)	1	P8400 limit cable assembly
38	35055 (8485)	1	Safety yoke
39	35101 (8485)	1	Slide
40	20268 (8485)	1	Screw
41	35960 (8485)	1	Reverse Trendelenburg switch assembly
42	90230 08 (8485)	1	Bolt
43	26452 (8485)	2	Screw
44	10714 (8485)	1	New style washer
45	23119 (8485)	4	Screw
46	35950 (8485)	1	Low/Trendelenburg limit assembly
47	35949 (8485)	1	Hi/Reverse Trendelenburg limit assembly
48	35951 (8485)	1	Hook/latch cable
49	31700 (8485)	1	Trendelenburg connector assembly
50	37244 (8485)	4	Wire tie—push mount
51	34417 (8485)	1	Nightlight cable assembly
52	33577 (8485)	1	Nightlight P.C. board (old style)
53	40217 02 (8485)	1	Nightlight P.C. board (new style)
54	34376 (8485)	1	Nightlight power cable assembly
55	23208 (8485)	2	Lockwasher
56	4434401 (8485)	1	Label transformer 220 V
57	4435 (8485)	2	Locknut

Item Number	Part Number	Quantity	Description
58	90018-10 (8485)	2	Hex head bolt
59	47106 (8485)	2	U channel extrusion
60	47550 (8485)	As required	Adhesive
61	14450 (8485)	5	Small cable tie
62	46733 (8485)	2	Speed nut
63	90055-10 (8485)	2	Screw
64	34537 (8485)	1	Switch cam
65	19558 (8485)	1	Switch cam
66	34402 (8485)	2	Screw
67	27873 (8485)	1	Cable clamp
68	4565818 (8485)	1	Ground strap assembly
69	32037 (8485)	1	Strain relief
70	35063 (8485)	1	Switch
71	34401 (8485)	2	Spacer
72	34311 (8485)	1	Bushing
73	4590504 (8485)	1	Label UL/CSA (8500)
74	4590503 (8485)	1	Label UL/CSA (8400)
75	36973-2 (8485)	4	Standoff
76	4570101 (8485)	1	Control board assembly (8400)
77	28837 (8485)	1	Hex nut
78	43328 (8485)	1	Standoff
79	45789 (8485)	1	Control board assembly (8500)
80	34763 (8485)	1	Label
81	44135-04 (8485)	1	Nurse control panel (8500)
82	44135-03 (8485)	1	Nurse control panel (8400)
83	32741 (8485)	2	Wire joint

Footrail Module—M45873-01

Figure 5-13. Footrail Module—M45873-01

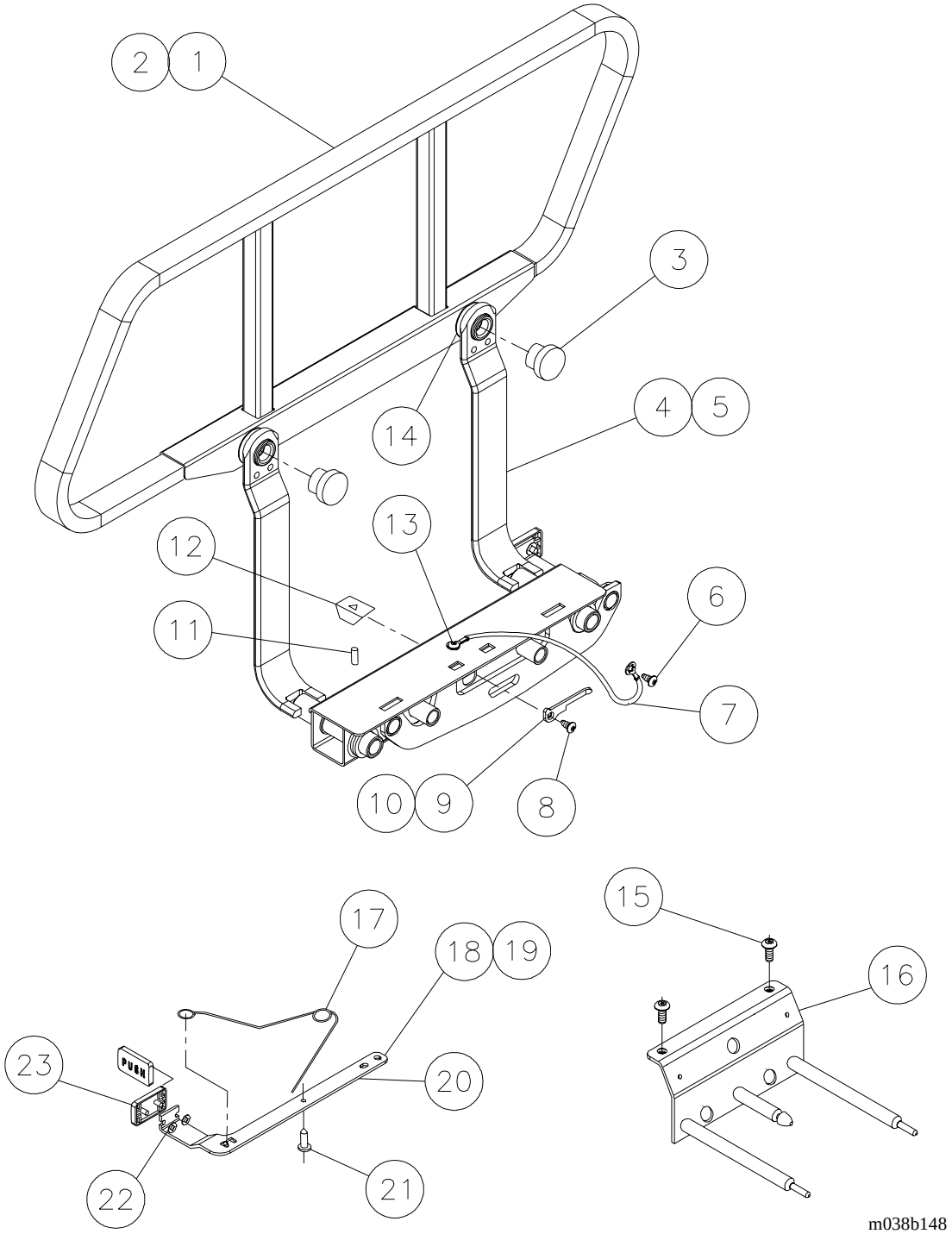

5

Table 5-25. Footrail Module—M45873-01

Item Number	Part Number	Quantity	Description
1	41391 (8485)§	1	Foot siderail assembly—rh
2	41392 (8485)§	1	Foot siderail assembly—lh
3	29457 (8485)§	4	Hole plug
4	41389 (8485)§	1	Foot siderail frame assembly—lh
5	41390 (8485)	1	Foot siderail frame assembly—rh
6	4759 (8485)	2	Screw
7	4565806 (8485)	2	Ground strap assembly
8	35072 (8485)	2	Shoulder screw
9	39713 (8485)	1	Key latch (lh)
10	39714 (8485)	1	Key latch (rh)
11	44328 (8485)	2	Spiral pin
12	26078 (8485)	2	Latch block
13	90037-02 (8485)	2	Screw
14	SA3351 (8485)	As required	Lithium grease
15	43880 (8485)	4	Torx pan head screw
16	23485 (8485)	2	Slide bracket assembly
17	35261 (8485)	2	Spring
18	39414 (8485)	1	Release arm assembly—rh
19	39415 (8485)	1	Release arm assembly—lh
20	39412 (8485)	2	Release arm
21	37387 (8485)	2	Shoulder screw
22	17291 (8485)	4	Pushnut
23	19562 (8485)	2	Latch cover

§ Specify dash number if product color is:

-48 Light neutral (off-white)

-33 Taupe (brown)

Footrail Module—M45873-04

Figure 5-14. Footrail Module—M45873-04

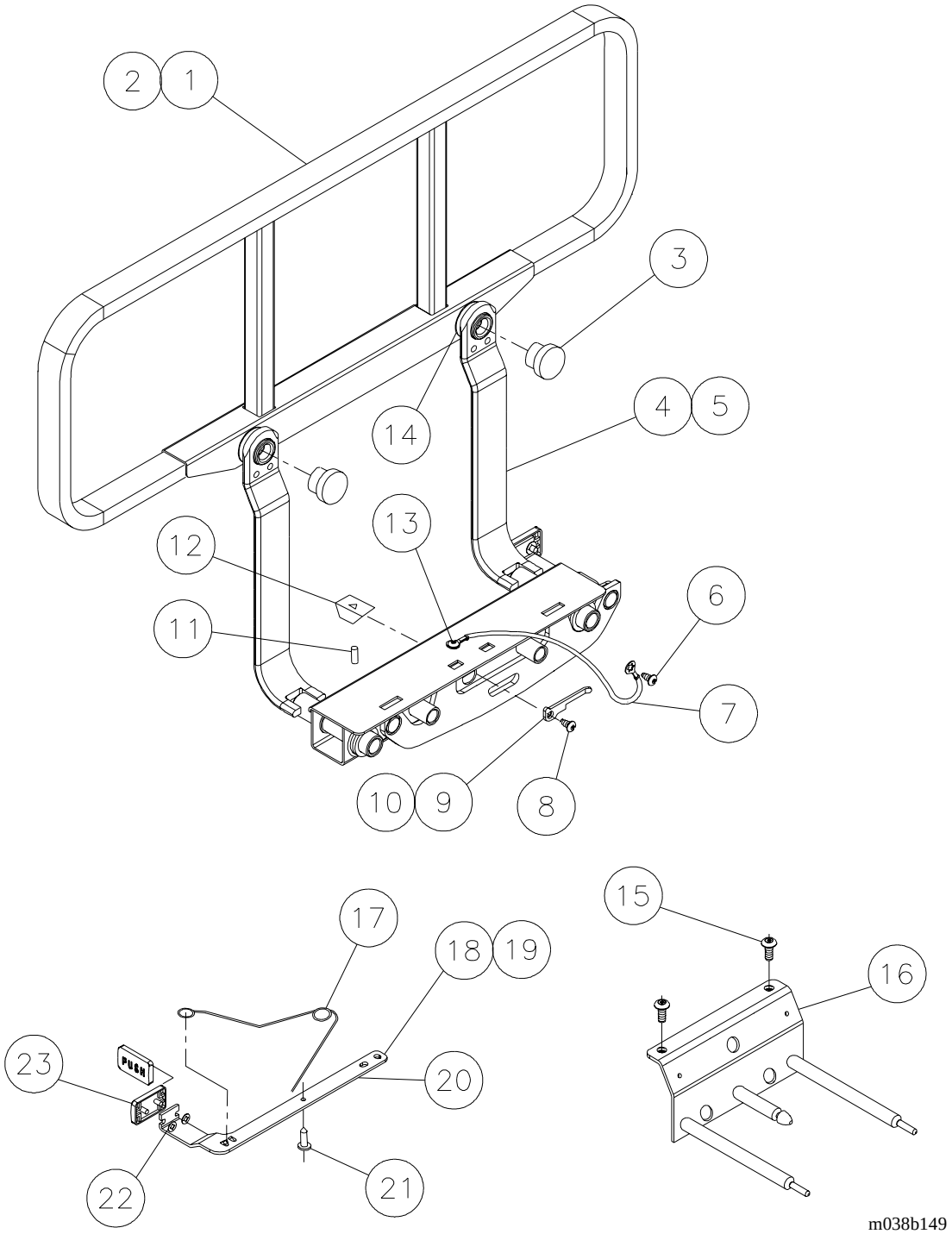

5

Table 5-26. Footrail Module—M45873-04

Item Number	Part Number	Quantity	Description
1	31226 (8485)	1	Siderail rh
2	31227 (8485)	1	Siderail lh
3	29457 (8485)§	4	Hole plug
4	3613733 (8485)	1	Siderail frame assembly—lh
5	36136-33 (8485)	1	Siderail frame assembly—rh
6	4759 (8485)	2	Screw
7	4565806 (8485)	2	Ground strap assembly
8	35072 (8485)	2	Shoulder screw
9	39713 (8485)	1	Key latch (lh)
10	39714 (8485)	1	Key latch (rh)
11	44328 (8485)	2	Spiral pin
12	26078 (8485)	2	Latch block
13	90037-02 (8485)	2	Screw
14	SA3351 (8485)	As required	Lithium grease
15	43880 (8485)	4	Torx pan head screw
16	23485 (8485)	2	Slide bracket assembly
17	35261 (8485)	2	Spring
18	39414 (8485)	1	Release arm assembly—rh
19	39415 (8485)	1	Release arm assembly—lh
20	39412 (8485)	2	Release arm
21	37387 (8485)	2	Shoulder screw
22	17291 (8485)	4	Pushnut
23	19562 (8485)	2	Latch cover

§ Specify dash number if product color is:

-48 Light neutral (off-white)

-33 Taupe (brown)

Headrail Module—49211

Figure 5-15. Headrail Module—49211

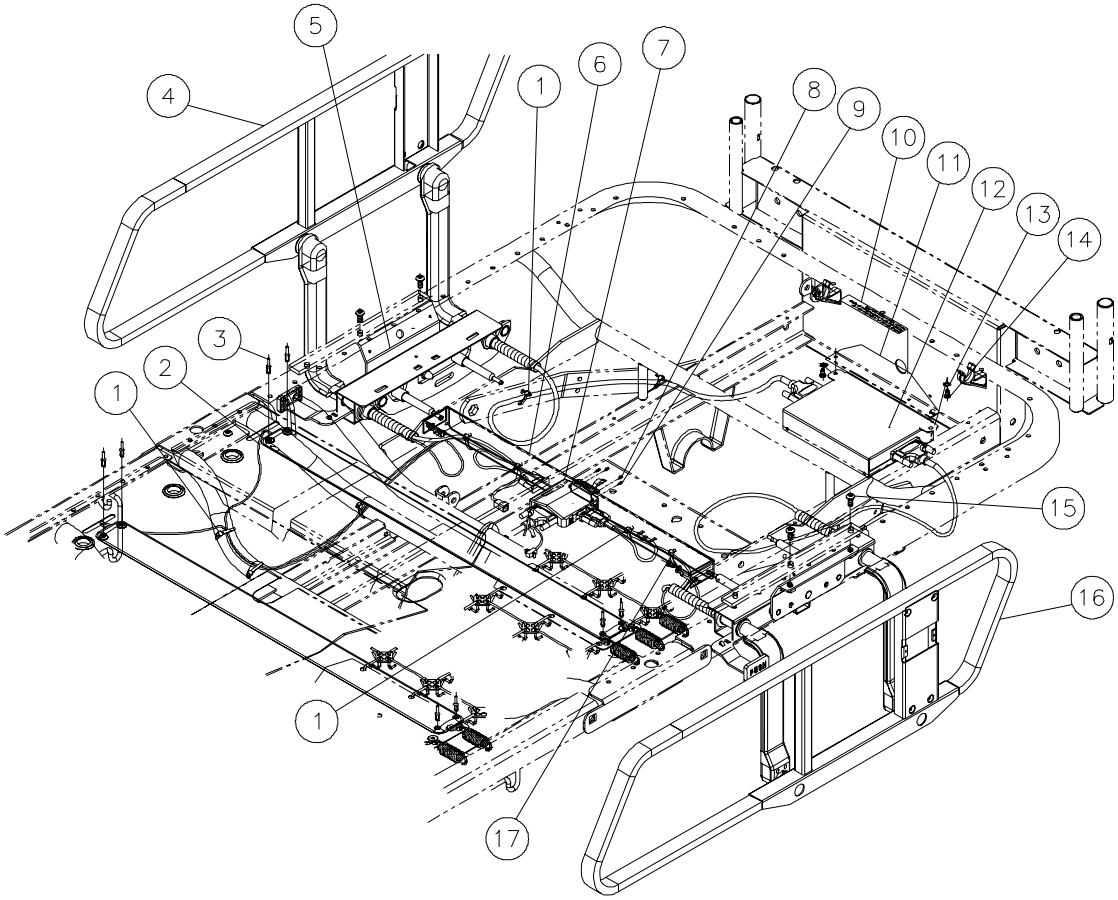

m038b164

5

Table 5-27. Headrail Module Assembly—Option 51 (Bed Functions, and Nurse Call)

Item Number	Part Number	Quantity	Description
1	19124 (8485)	11	Cable tie
2	Not required	0	Not required
3	Not required	0	Not required
4	60597 06 (8485)	1	Headrail—rh
5	23485 (8485)	2	Slide bracket assembly
6	45669 (8485)	1	Testport cable bracket
7	45896 (8485)	1	Testport cable assembly
8	28967 (8485)	2	Screw
9	28968 (8485)	2	Testport cable screw
10	34778 (8485)	1	Label (speaker damage)
11	38181 (8485)	1	Protector plate
12	45591 (8485)	1	J-box assembly
13	15907 (8485)	2	Lockwasher
14	18252 (8485)	2	Torx screw
15	43880 (8485)	4	Torx screw
16	60597 23 (8485)	1	Headrail—lh
17	10886 or 18252 or 18291 (vintage specific)	2	Screw

Table 5-28. Headrail Module Assembly—Option 52 (Bed Functions, Nurse Call, and Entertainment)

Item Number	Part Number	Quantity	Description
1	19124 (8485)	11	Cable tie
2	Not required	0	Not required
3	Not required	0	Not required
4	60597 02 (8485)	1	Headrail—rh
5	23485 (8485)	2	Slide bracket assembly
6	45669 (8485)	1	Testport cable bracket
7	45896 (8485)	1	Testport cable assembly

Item Number	Part Number	Quantity	Description
8	28967 (8485)	2	Screw
9	28968 (8485)	2	Testport cable screw
10	34778 (8485)	1	Label (speaker damage)
11	38181 (8485)	1	Protector plate
12	45591 (8485)	1	J-box assembly
13	15907 (8485)	2	Lockwasher
14	18252 (8485)	2	Torx screw
15	43880 (8485)	4	Torx screw
16	60597 01 (8485)	1	Headrail—lh
17	10886 or 18252 or 18291 (vintage specific)	2	Screw

Table 5-29. Headrail Module Assembly—Option 53 (Bed Functions, Nurse Call, Entertainment, and Lighting)

Item Number	Part Number	Quantity	Description
1	19124 (8485)	11	Cable tie
2	Not required	0	Not required
3	Not required	0	Not required
4	60597 04 (8485)	1	Headrail—rh
5	23485 (8485)	2	Slide bracket assembly
6	45669 (8485)	1	Testport cable bracket
7	45896 (8485)	1	Testport cable assembly
8	28967 (8485)	2	Screw
9	28968 (8485)	2	Testport cable screw
10	34778 (8485)	1	Label (speaker damage)
11	38181 (8485)	1	Protector plate
12	45591 (8485)	1	J-box assembly
13	15907 (8485)	2	Lockwasher
14	18252 (8485)	2	Torx screw
15	43880 (8485)	4	Torx screw
16	60597 03 (8485)	1	Headrail—lh

Item Number	Part Number	Quantity	Description
17	10886 or 18252 or 18291 (vintage specific)	2	Screw

Table 5-30. Headrail Module Assembly—Option 54 (Bed Functions, Nurse Call, Entertainment, and Bed Exit)

Item Number	Part Number	Quantity	Description
1	19124 (8485)	14	Cable tie
2	34400 (8485)	1	Tape switch assembly
3	36790 (8485)	8	Drive rivet
4	60597 02 (8485)	1	Headrail—rh
5	23485 (8485)	2	Slide bracket assembly
6	45669 (8485)	1	Testport cable bracket
7	45896 (8485)	1	Testport cable assembly
8	28967 (8485)	2	Screw
9	28968 (8485)	2	Testport cable screw
10	34778 (8485)	1	Label (speaker damage)
11	38181 (8485)	1	Protector plate
12	45591 (8485)	1	J-box assembly
13	15907 (8485)	2	Lockwasher
14	18252 (8485)	2	Torx screw
15	43880 (8485)	4	Torx screw
16	60597 05 (8485)	1	Headrail—lh
17	10886 or 18252 or 18291 (vintage specific)	2	Screw

Table 5-31. Headrail Module Assembly—Option 55 (Bed Functions, Nurse Call, Entertainment, Bed Exit, and Lighting)

Item Number	Part Number	Quantity	Description
1	19124 (8485)	14	Cable tie

Item Number	Part Number	Quantity	Description
2	34400 (8485)	1	Tape switch assembly
3	36790 (8485)	8	Drive rivet
4	60597 04 (8485)	1	Headrail—rh
5	23485 (8485)	2	Slide bracket assembly
6	45669 (8485)	1	Testport cable bracket
7	45896 (8485)	1	Testport cable assembly
8	28967 (8485)	2	Screw
9	28968 (8485)	2	Testport cable screw
10	34778 (8485)	1	Label (speaker damage)
11	38181 (8485)	1	Protector plate
12	45591 (8485)	1	J-box assembly
13	15907 (8485)	2	Lockwasher
14	18252 (8485)	2	Torx screw
15	43880 (8485)	4	Torx screw
16	60597 07 (8485)	1	Headrail—lh
17	10886 or 18252 or 18291 (vintage specific)	2	Screw

5

Table 5-32. Headrail Module Assembly—Option 56 (Bed Functions, Nurse Call, and Bed Exit)

Item Number	Part Number	Quantity	Description
1	19124 (8485)	14	Cable tie
2	34400 (8485)	1	Tape switch assembly
3	36790 (8485)	8	Drive rivet
4	60597 06 (8485)	1	Headrail—rh
5	23485 (8485)	2	Slide bracket assembly
6	45669 (8485)	1	Testport cable bracket
7	45896 (8485)	1	Testport cable assembly
8	28967 (8485)	2	Screw
9	28968 (8485)	2	Testport cable screw
10	34778 (8485)	1	Label (speaker damage)

Item Number	Part Number	Quantity	Description
11	38181 (8485)	1	Protector plate
12	45591 (8485)	1	J-box assembly
13	15907 (8485)	2	Lockwasher
14	18252 (8485)	2	Torx screw
15	43880 (8485)	4	Torx screw
16	60597 09 (8485)	1	Headrail—lh
17	10886 or 18252 or 18291 (vintage specific)	2	Screw

Table 5-33. Headrail Module Assembly—Option 59 (Bed Functions and Future Options)

Item Number	Part Number	Quantity	Description
1	19124 (8485)	5	Cable tie
2	Not required	0	Not required
3	Not required	0	Not required
4	60597 08 (8485)	1	Headrail—rh
5	23485 (8485)	2	Slide bracket assembly
6	45669 (8485)	1	Testport cable bracket
7	45896 (8485)	1	Testport cable assembly
8	28967 (8485)	2	Screw
9	28968 (8485)	2	Testport cable screw
10	Not required	0	Not required
11	Not required	0	Not required
12	Not required	0	Not required
13	Not required	0	Not required
14	Not required	0	Not required
15	43880 (8485)	4	Torx screw
16	60597 11 (8485)	1	Headrail—lh

Item Number	Part Number	Quantity	Description
17	10886 or 18252 or 18291 (vintage specific)	2	Screw

NOTES:

Headrail Module

Figure 5-16. Headrail Module

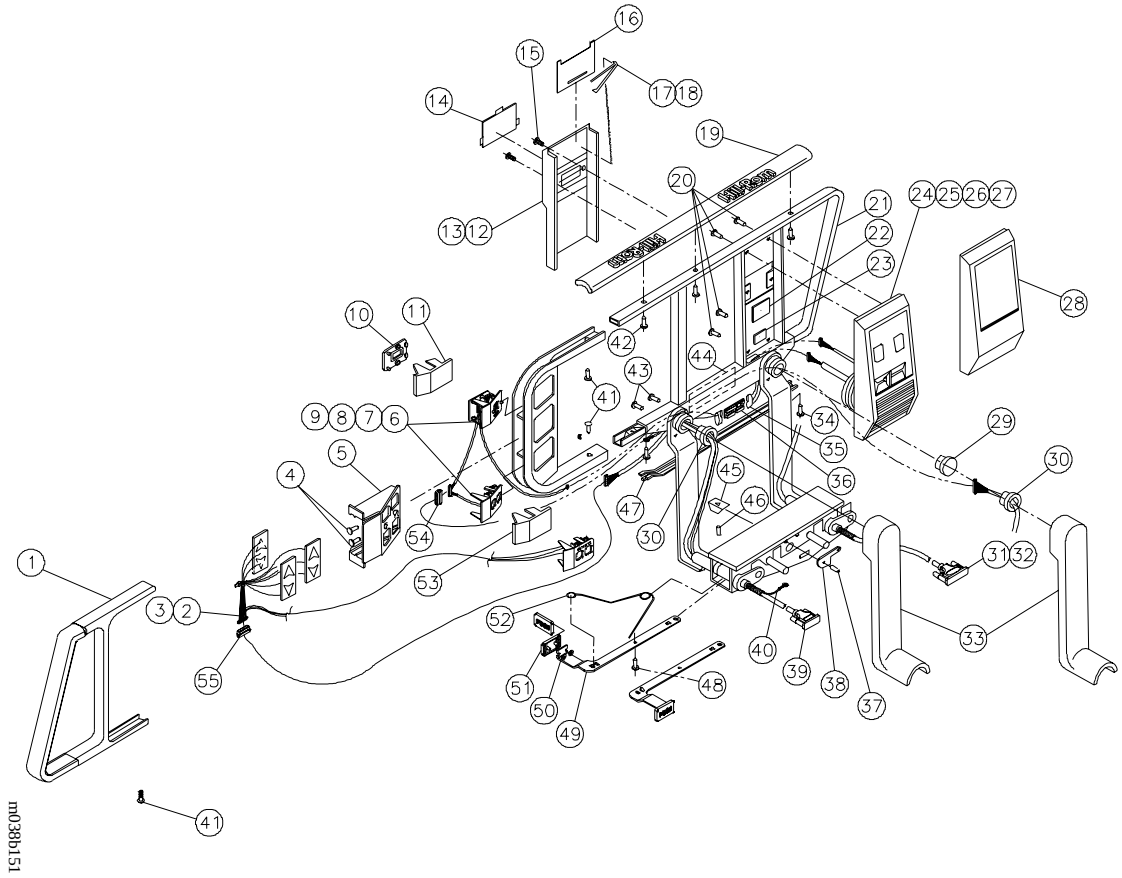

5

Table 5-34. Headrail Module

Item Number	Part Number	Quantity	Description
1	40747 (8485)§	1	Siderail extender assembly
2	44639-01 (8485)	1	Bed function switch assembly—lh
3	44639-02 (8485)	1	Bed function switch assembly—rh
4	18516 (8485)	2	Screw, round head
5	31664 (8485)§ 31663 (8485)§	1 1	Head and knee insert—lh Head and knee insert—rh
6	44637-03 (8485)§	1	Nurse call assembly—lh
7	44637-04 (8485)§	1	Nurse call assembly—rh
8	44637-01 (8485)§	1	Nurse call assembly—lh
9	44637-02 (8485)§	1	Nurse call assembly—rh
10	31273 (8485)	1	Nurse call insert—blank
11	31274 (8485)	1	Nurse call insert—blank
12	44606-01 (8485)§	1	Right-hand communication housing back
13	44465-01 (8485)§	1	Left-hand communication housing back
14	34408 (8485)§§	1	Cover plate
15	34457 (8485)	2	Screw

§ Specify dash number if product color is:

-48 Light neutral (off-white)

-33 Taupe (brown)

§§ Specify dash number if product color is:

-48 Light neutral (off-white)

-55 Black (for taupe or brown products)

5

Item Number	Part Number	Quantity	Description
16	38513 or 38513-55 (8485)	1	Sliding door
17	34409 (8485)	1	Spring
18	25329 (8485)	As required	Adhesive
19	32612 (8485)§	1	Top cane
20	34684 (8485)	4	Screw
21	41372 (8485)§ 41371 (8485)§	1 1	Siderail frame assembly—rh Siderail frame assembly—lh
22	40721 (8485)	1	Sound dampening spacer
23	28579 (8485)	0.0833 LFT	Tape
24	4463204 (8485) 4463204 (8485)	1 1	Communication housing assembly—rh Communication housing assembly—lh
25	44632 05 (8485)	1	Communication housing assembly—lh
26	44632 05 (8485)	1	Communication housing assembly—lh
27	44632 07 (8485)	1	Communication housing assembly—lh
28	34454 (8485)§	1	Communication housing blank
29	29457 (8485)§	1	Hole plug
30	28717 (8485)	1	Bushing
31	44555-03 (8485)	1	25 conductor communication cable—lh
32	44555-04 (8485)	1	25 conductor communication cable—rh
33	19833 (8485)§	1	Wire cover
34	90166-01 (8485)	2	Screw
35	90002-06 (8485)	1	Tubing blank
36	44578 (8485)	1	Interface board
37	35072 (8485)	1	Shoulder screw

§ Specify dash number if product color is:

-48 Light neutral (off-white)

-33 Taupe (brown)

Item Number	Part Number	Quantity	Description
38	39713 (8485) 39714 (8485)	1 1	Key latch (lh) Key latch (rh)
39	44554-03 (8485) 44554-04 (8485)	1 1	15 conductor function cable—lh 15 conductor function cable—rh
40	28867 (8485)	1	Ground strap assembly
41	18921 (8485)	3	Screw
42	90188-08 (8485)	3	Hilow thread forming screw
43	90166-01 (8485)	2	Screw
44	41696-01 (8485)	1	Warning/caution label
45	26078 (8485)	1	Latch block
46	44328 (8485)	1	Spiral pin
47	28816 (8485)	1	Bottom cover
48	37387 (8485)	1	Shoulder screw
49	39412 (8485)	1	Release arm
50	17291 (8485)	2	Pushnut
51	19562 (8485)	1	Latch cover
52	35261 (8485)	1	Spring
53	28328 (8485)§	1	Lighting insert blank
54	44678-11 (8485)	1	Transition connector
55	44678-12 (8485)	1	Transition connector

§ Specify dash number if product color is:

-48 Light neutral (off-white)

-33 Taupe (brown)

Headrail Module (Bed Functions Only)

Figure 5-17. Headrail Module (Bed Functions Only)

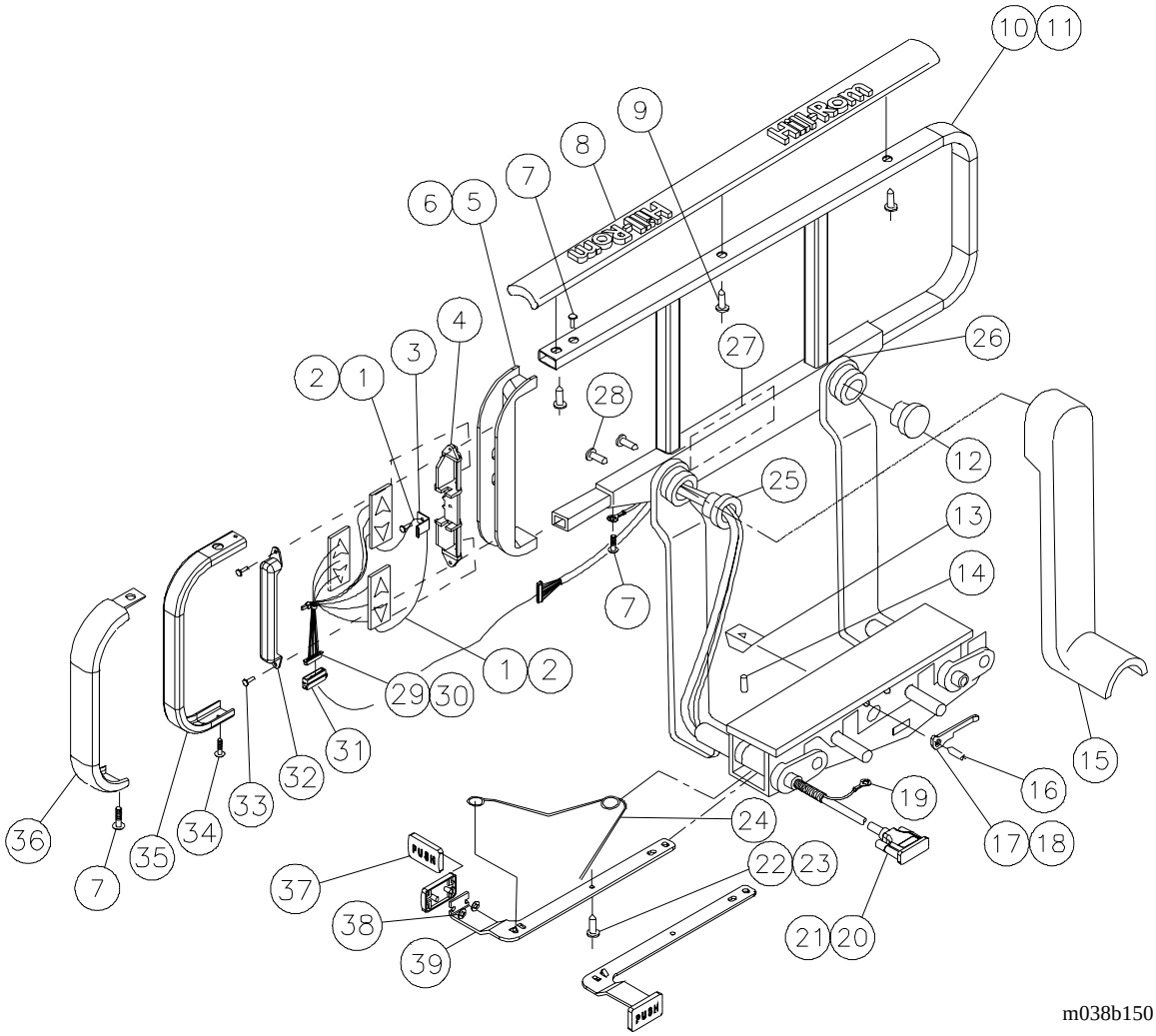

5

Table 5-35. Headrail Module (Bed Functions Only)

Item Number	Part Number	Quantity	Description
1	29765 (8485)	2	Ground wire—switch
2	22602 (8485)	As required	Solder
3	29738 (8485)	1	Ground bracket
4	19837 (8485)	1	Switch mounting bracket
5	27726 (8485)	1	Switch housing—lh
6	27728 (8485)	1	Switch housing—rh
7	393 (8485)	3	Screw
8	32613 (8485)§	1	Top cane cover
9	20268 (8485)	1	Screw
10	36132 (8485)	1	Siderail frame assembly—lh
11	36133 (8485)	1	Siderail frame assembly—rh
12	29457 (8485)§	1	Hole plug
13	26078 (8485)	1	Latch block
14	142 (8485)	1	Roll pin
15	19833 (8485)§	1	Wire cover
16	35072 (8485)	1	Shoulder screw
17	39713 (8485)	1	Key latch (lh)
18	39714 (8485)	1	Key latch (rh)
19	28867 (8485)	1	Ground strap assembly
20	44554-01 (8485)	1	15 conductor function cable—lh
21	44554-02 (8485)	1	15 conductor function cable—rh
22	SA4841 (8485)	As required	Red Loctite
23	37387 (8485)	1	Shoulder screw
24	35261 (8485)	1	Spring
25	28717 (8485)	1	Bushing

§ Specify dash number if product color is:

-48 Light neutral (off-white)

-33 Taupe (brown)

Item Number	Part Number	Quantity	Description
26	SA3351 (8485)	As required	Lithium grease
27	41696-02 (8485)	1	Warning label/caution
28	90166-01 (8485)	2	Screw
29	44639-01 (8485)	1	Bed function switch assembly—lh
30	44639-02 (8485)	1	Bed function switch assembly—rh
31	44678-12 (8485)	1	Transition connector
32	29727 (8485)	1	Switch cover
33	31027 (8485)	3	Screw, pan head
34	4759 (8485)	1	Screw
35	29786 (8485)	1	Channel
36	19835 (8485)§	1	Cane end cover
37	19562 (8485)	1	Latch cover
38	17291 (8485)	2	Pushnut
39	39412 (8485)	1	Release arm

§ Specify dash number if product color is:

-48 Light neutral (off-white)

-33 Taupe (brown)

NOTES:

Nurse Control Panel—P/N 44135-03/04

Figure 5-18. Nurse Control Panel—P/N 44135-03/04

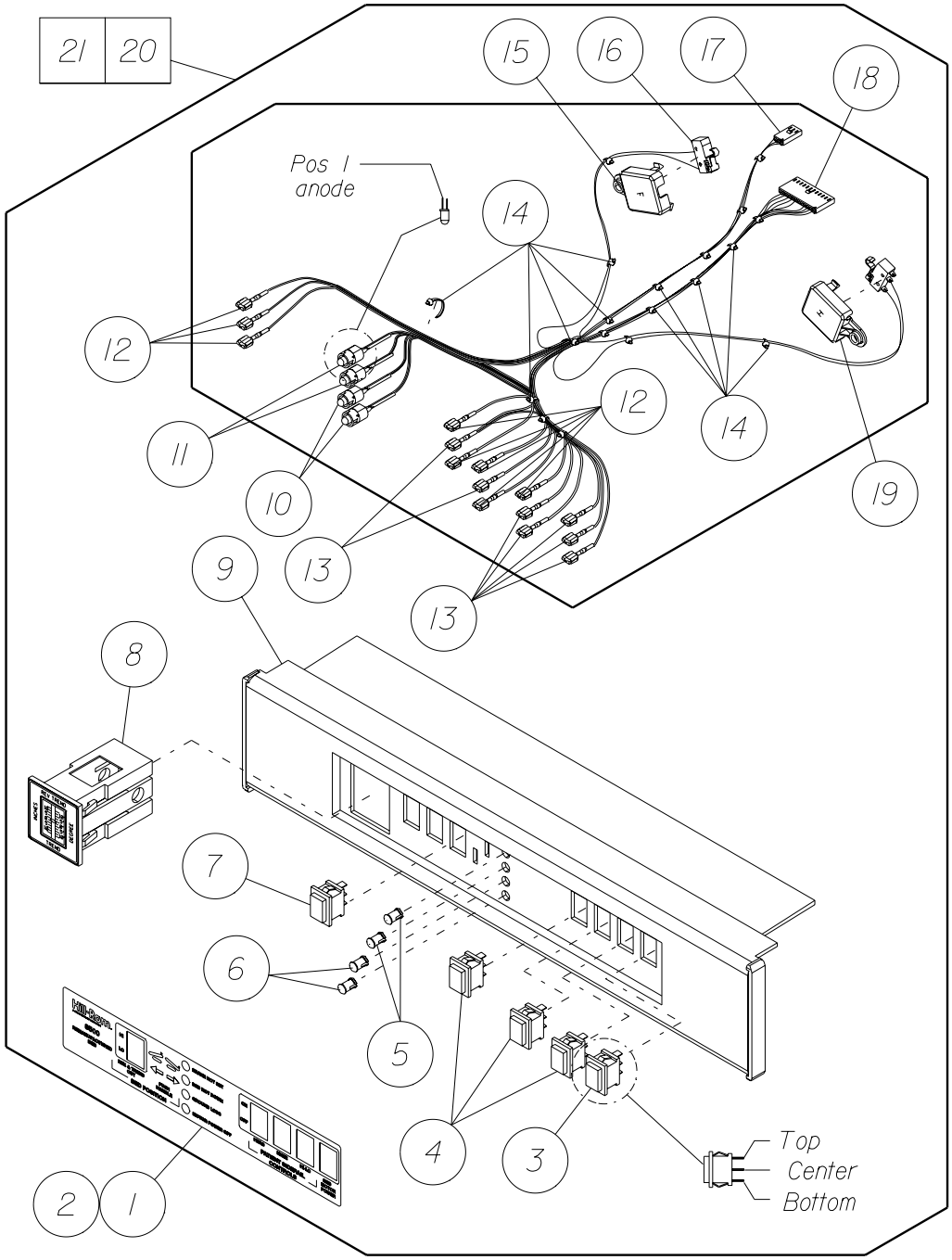

m038b027

5

Table 5-36. Nurse Control Panel—P/N 44135-03/04

Item Number	Part Number	Quantity	Description
1	43716-02 (8485)	1	Nurse panel label 8400
2	43716-03 (8485)	1	Nurse panel label 8500
3	30433-02 (8485)	1	Rocker switch, 2 position, red
4	30433-01 (8485)	3	Rocker switch 2 position black
5	30428-02 (8485)	2	Yellow LED lens
6	30428-01 (8485)	2	Red LED lens
7	30432 (8485)	1	Rocker switch—3 position— black
8	43714 (8485)	1	Vertical face Trendelenburg indicator
9	43713 (8485)§	1	Nurse control panel facade
10	30500 (8485)	2	LED, red
11	30500-01 (8485)	2	Yellow LED
12	30984 (8485)	8	Fast-on terminal
13	43388 (8485)	7	Amp terminal
14	14450 (8485)	21	Small cable tie
15	48833 (8485)	1	Foot hilow low limit housing
16	43384 (8485)	2	Limit switch
17	30955-03 (8485)	1	Contact housing
18	30955-14 (8485)	1	Contact housing
19	48832 (8485)	1	Head hilow low limit housing
20	44135-03 (8485)§	1	Nurse control panel (8400)
21	44135-04 (8485)§	1	Nurse control panel (8500)

§ Specify dash number if product color is:

-48 Light neutral (off-white)

-33 Taupe (brown)

5

Control Box Assembly—P/N 44680-01

Figure 5-19. Control Box Assembly—P/N 44680-01

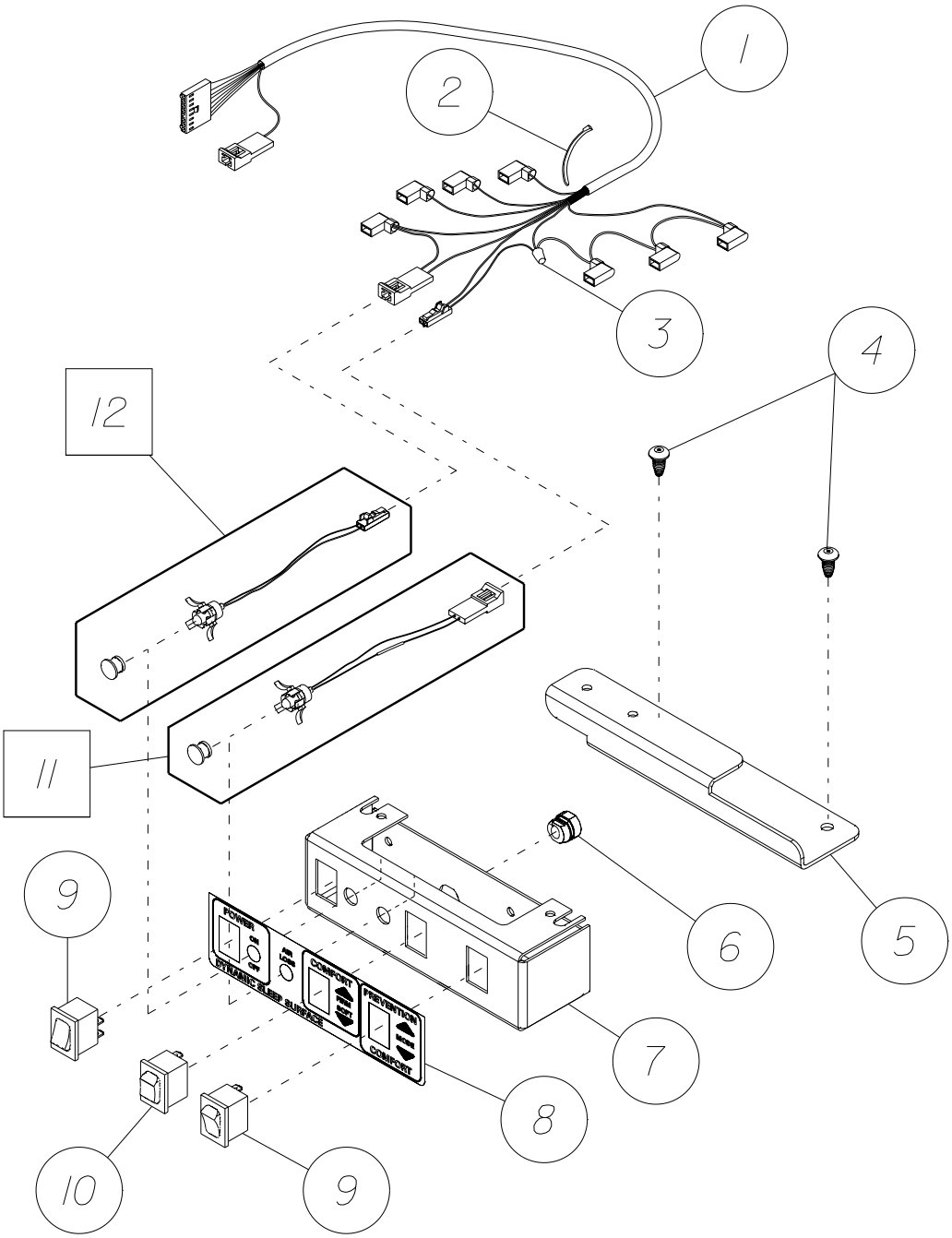

m038b023

Table 5-37. Control Box Assembly—P/N 44680-01

Item Number	Part Number	Quantity	Description
1	44624-01 (8485)	1	Air system control cable
2	14450 (8485)	1	Small cable tie
3	15408 (8485)	1	Wire nut
4	43878 (8485)	2	Torx button head screw
5	44691 (8485)	1	Control box bracket
6	34844 (8485)	1	Strain relief
7	44542-48 (8485)§	1	Control box
8	44630 (8485)	1	Air mattress label
9	41437-02 (8485)	2	Rocker switch
10	42742-01 (8485)	1	Rocker switch—momentary
11	42782 (8485)	1	Complete LED assembly (yellow)
12	44694 (8485)	1	Complete LED assembly—red

§ Specify dash number if product color is:

-48 Light neutral (off-white)

-33 Taupe (brown)

5

Head Motor Without CPR and Drive Unit Assemblies (P8400 Models Only)

Figure 5-20. Head Motor Without CPR and Drive Unit Assemblies (P8400 Models Only)

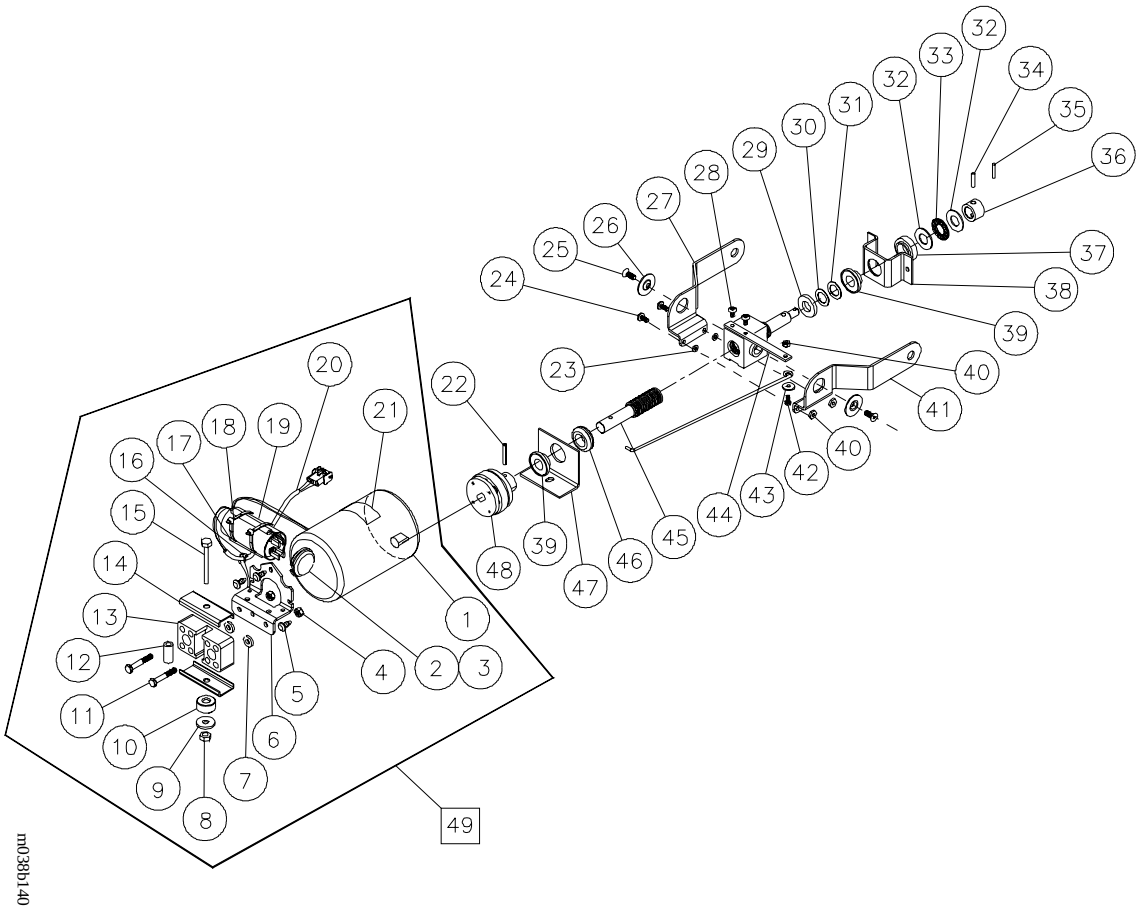

5

Table 5-38. Head Motor Without CPR and Drive Unit Assemblies (P8400 Models Only)

Item Number	Part Number	Quantity	Description
1	2792401 (8485)	1	Head motor 8400
2	33871 (8485)	1	End cap
3	15942 (8485)	As required	Electrical tape
4	4435 (8485)	2	Locknut
5	9936 (8485)	2	Hex bolt
6	28265 (8485)	1	Motor bracket
7	25283 (8485)	2	Washer
8	831 (8485)	1	Locknut
9	19918 (8485)	1	Washer
10	29414 (8485)	1	Spacer
11	90018-32 (8485)	2	Cap screw
12	29411 (8485)	1	Spacer
13	36249 (8485)	1	Rear motor mount assembly
14	29389 (8485)	2	Motor mount channel
15	29422 (8485)	1	Cap screw
16	14450 (8485)	1	Small cable tie
17	38260 (8485)	1	Foam tape
18	19124 (8485)	2	Large cable tie
19	30146 (8485)	1	Capacitor
20	48782 (8485)	1	Cable assembly head motor/capacitor
21	34812 (8485)	1	Caution label
22	3517 (8485)	1	Spring pin
23	15244 (8485)	2	Fiber washer
24	9712 (8485)	2	Screw
25	4390 (8485)	2	Screw
26	4432 (8485)	2	Washer
27	19307 (8485)	1	Head drive arm rh
28	18921 (8485)	2	Screw
29	19326 (8485)	1	Spacer
30	12860 (8485)	As required	Shim washer (thick)
31	12859 (8485)	As required	Shim (thin)

Item Number	Part Number	Quantity	Description
32	11579 (8485)	1	Thrust washer
33	11578 (8485)	1	Thrust bearing
34	12434 (8485)	1	Roll pin
35	19636 (8485)	1	Slotted spring pin
36	12223 (8485)	1	Collar
37	31567 (8485)	1	Head screw bushing
38	19271 (8485)	1	Head screw mounting bracket
39	34613 (8485)	2	Bearing
40	755 (8485)	3	Locknut
41	19308 (8485)	1	Head drive arm lh
42	14399 (8485)	1	Shoulder bolt
43	9525 (8485)	1	Washer
44	19679 (8485)	1	Limit bracket
45	31576 (8485)	1	Head screw and nut assembly
46	19278 (8485)	1	Grommet
47	20526 (8485)	1	Head screw bracket
48	36250 (8485)	1	Coupling assembly
49	3434001 (8485)	1	Motor assembly

NOTES:

Head Motor and Drive Unit Assemblies with CPR (P8500 Models Only)

Figure 5-21. Head Motor and Drive Unit Assemblies with CPR (P8500 Models Only)

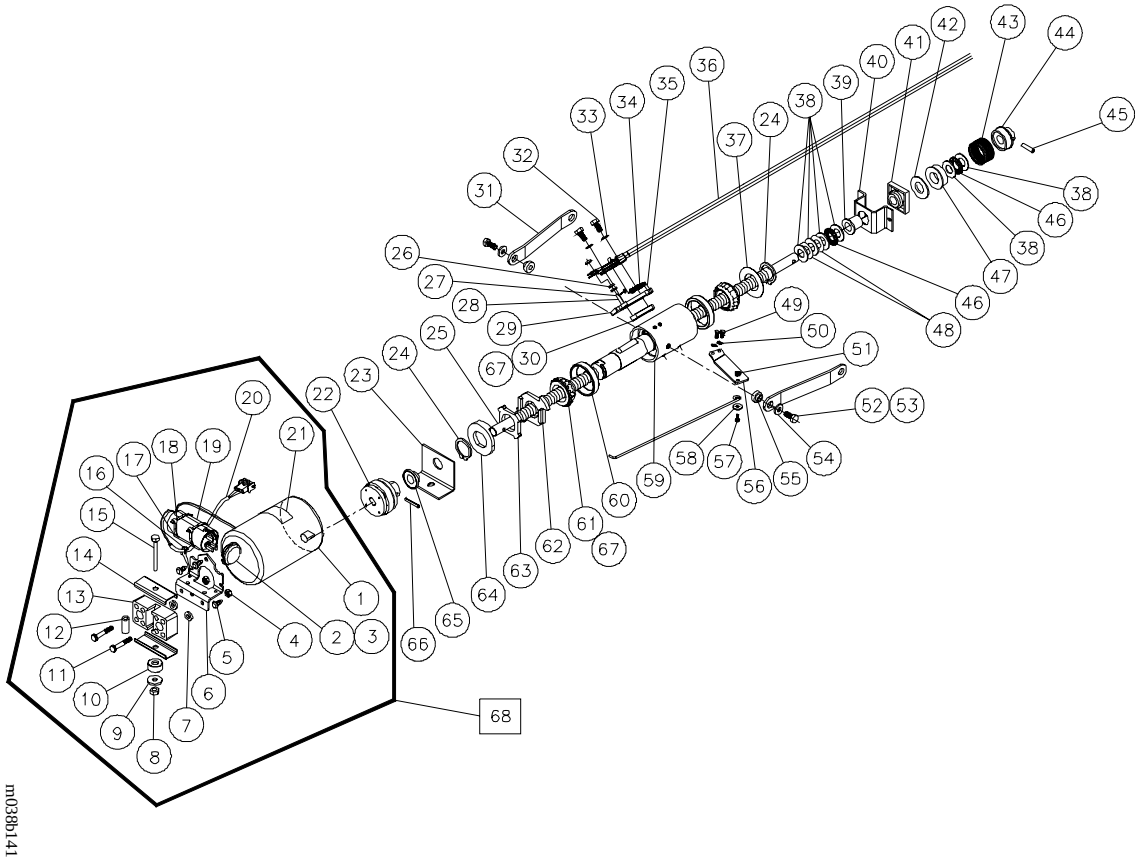

5

Table 5-39. Head Motor and Drive Unit Assemblies with CPR (P8500 Models Only)

Item Number	Part Number	Quantity	Description
1	35000S (8485)	1	Universal motor assembly
2	33871 (8485)	1	End cap
3	15942 (8485)	As required	Electrical tape
4	4435 (8485)	2	Locknut
5	16042 (8485)	3	Sims screw
6	28265 (8485)	1	Motor bracket
7	25283 (8485)	2	Washer
8	831 (8485)	1	Locknut
9	19918 (8485)	1	Washer
10	29414 (8485)	1	Spacer
11	90018-32 (8485)	2	Cap screw
12	29411 (8485)	1	Spacer
13	36249 (8485)	1	Rear motor mount assembly
14	29389 (8485)	2	Motor mount channel
15	29422 (8485)	1	Cap screw
16	14450 (8485)	1	Small cable tie
17	38260 (8485)	1	Foam tape
18	19124 (8485)	2	Large cable tie
19	30146 (8485)	1	Capacitor
20	34467 (8485)	1	Cable assembly universal motor capacitor
21	34812 (8485)	1	Caution label
22	36250 (8485)	1	Coupling assembly
23	33294 (8485)	1	Head screw bracket
24	34326 (8485)	2	Retaining ring
25	42513 (8485)	1	Head flat ball screw
26	10714 (8485)	2	New style washer
27	20517 (8485)	1	Cotter pin
28	34639 (8485)	1	Pin
29	33836 (8485)	1	Latch
30	33835 (8485)	1	Latch guide
31	33621 (8485)	2	Head strap

Item Number	Part Number	Quantity	Description
32	90332-10 (8485)	2	Bolt
33	42066 (8485)	2	Safety washer
34	33618 (8485)	1	Spring
35	34638 (8485)	1	Groove pin
36	33565 (8485)	1	Cable assembly
37	33622 (8485)	1	Bearing spacer
38	11579 (8485)	6	Thrust washer
39	42212 (8485)	2	Bushing
40	33279 (8485)	1	Head screw bracket
41	33280 (8485)	1	Bearing end
42	42119 (8485)	1	Brake pad
43	28082 (8485)	1	Brake spring
44	33316 (8485)	1	Fixed brake block
45	12434 (8485)	1	Roll pin
46	11578 (8485)	2	Thrust bearing
47	37948 (8485)	1	Floating brake drum
48	31556 (8485)	2	Wave washer
49	15463 (8485)	2	Bolt
50	23208 (8485)	2	Lockwasher
51	755 (8485)	1	Locknut
52	90332-10 (8485)	2	Bolt
53	SA4841 (8485)	As required	Red loctite
54	35667 (8485)	2	Washer
55	33615 (8485)	2	Spacer
56	33617 (8485)	1	Limit switch bracket
57	14399 (8485)	1	Shoulder bolt
58	9525 (8485)	1	Washer
59	38122 (8485)	1	Bearing housing
60	38069 (8485)	2	Bearing cup
61	38070 (8485)	2	Bearing cone
62	35504 (8485)	1	Lock hub
63	33613 (8485)	1	Lock pad

Item Number	Part Number	Quantity	Description
64	33611 (8485)	1	Hub
65	34613 (8485)	1	Bearing
66	3517 (8485)	1	Spring pin
67	SA3351 (8485)	As required	Lithium grease
68	34340 (8485)	1	Motor assembly

Knee Motor and Drive Unit Assemblies

Figure 5-22. Knee Motor and Drive Unit Assemblies

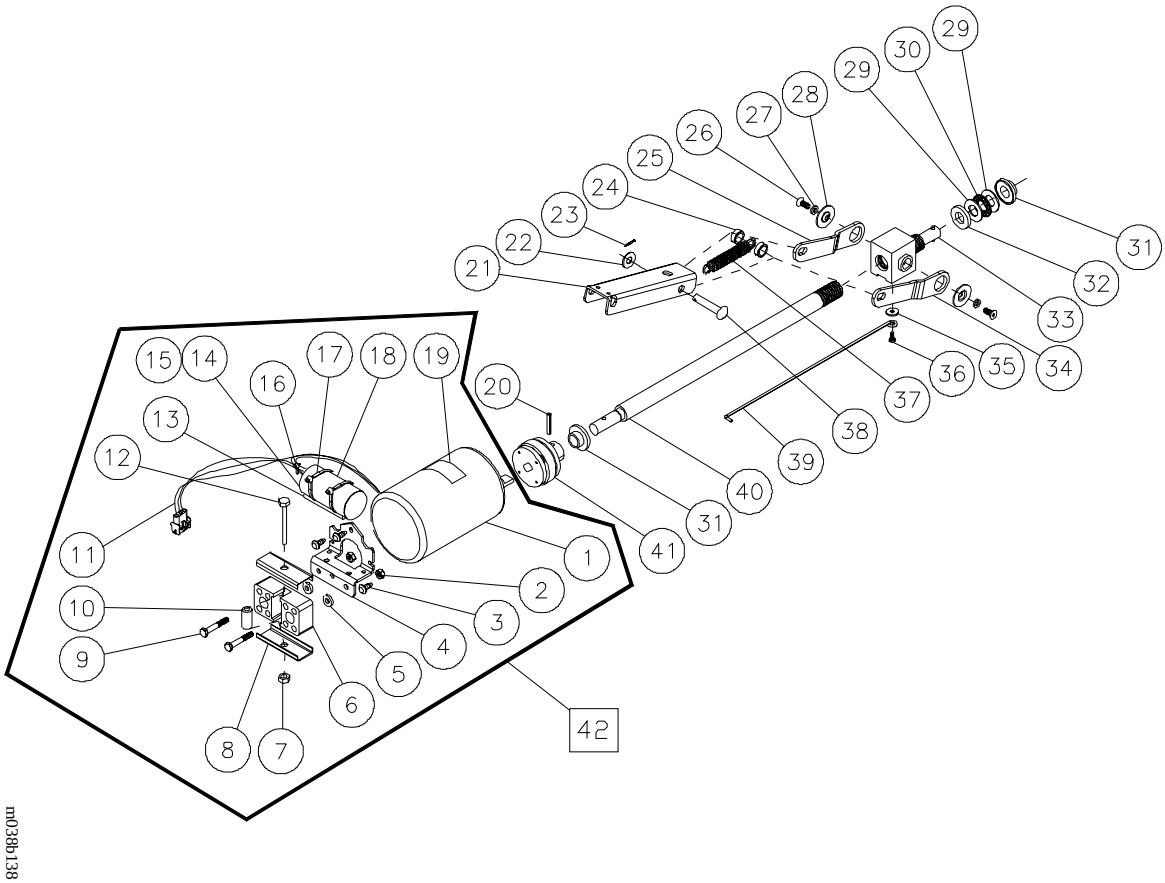

5

Table 5-40. Knee Motor and Drive Unit Assemblies

Item Number	Part Number	Quantity	Description
1	35000S (8485)	1	Universal motor assembly
2	4435 (8485)	2	Locknut
3	16042 (8485)	3	Sims screw
4	28265 (8485)	1	Motor bracket
5	25283 (8485)	2	Washer
6	36249 (8485)	1	Rear motor mount assembly
7	831 (8485)	1	Locknut
8	29389 (8485)	2	Mount motor channel
9	90018-32 (8485)	2	Cap screw
10	29411 (8485)	1	Spacer
11	34467 (8485)	1	Cable assembly universal motor capacitor
12	90016 40 (8485)	1	Hex head machine bolt
13	38260 (8485)	1	Foam tape
14	33871 (8485)	1	End cap
15	15942 (8485)	As required	Electrical tape
16	14450 (8485)	1	Small cable tie
17	19124 (8485)	2	Large cable tie
18	30146 (8485)	1	Capacitor
19	34812 (8485)	1	Caution label
20	3517 (8485)	1	Spring pin
21	31915 (8485)	1	Knee lift channel
22	4540 (8485)	1	Washer
23	10426 (8485)	1	Cotter pin
24	29895 (8485)	2	Spacer
25	19819 (8485)	1	Knee lift arm rh
26	4390 (8485)	2	Screw
27	22659 (8485)	2	Lockwasher
28	4432 (8485)	2	Washer
29	11579 (8485)	2	Thrust washer
30	11578 (8485)	1	Thrust bearing
31	34613 (8485)	2	Bearing

Item Number	Part Number	Quantity	Description
32	19326 (8485)	1	Spacer
33	128 (8485)	1	Roll pin
34	19820 (8485)	1	Knee lift arm—lh
35	9525 (8485)	1	Washer
36	14399 (8485)	1	Shoulder bolt
37	19822 (8485)	1	Spring
38	4453 (8485)	1	Pin
39	22847 (8485)	1	Rod
40	34544 (8485)	1	Knee screw and nut
41	36250 (8485)	1	Coupling assembly
42	34341 (8485)	1	Motor assembly

NOTES:

Hilow Motor and Drive Unit Assemblies

Figure 5-23. Hilow Motor and Drive Unit Assemblies

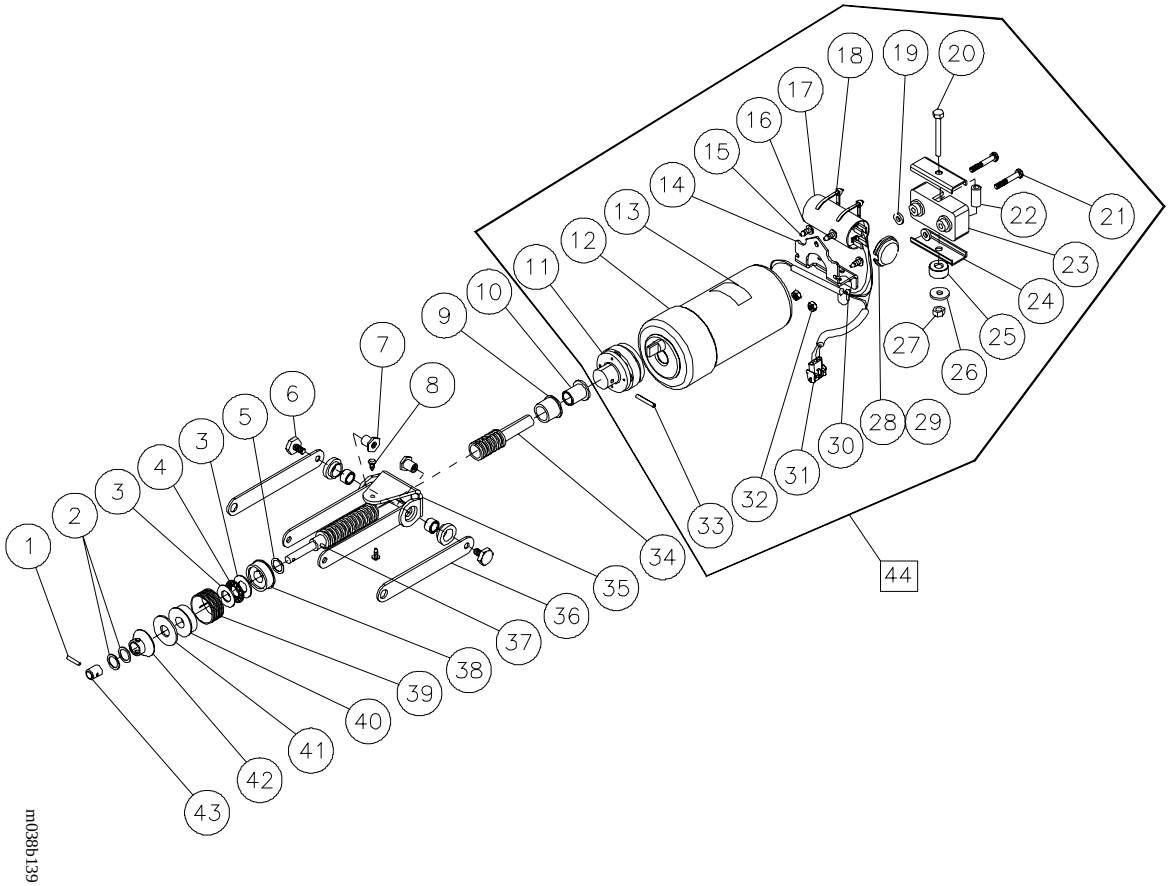

5

Table 5-41. Hilow Motor and Drive Unit Assemblies

Item Number	Part Number	Quantity	Description
1	19636 (8485)	1	Slotted spring pin
2	1101 (8485)	2	Gear shim washer
3	11579 (8485)	2	Thrust washer
4	11578 (8485)	1	Thrust bearing
5	11876 (8485)	1	Washer
6	19224 (8485)	2	Bolt
7	19225 (8485)	2	Shoulder nut
8	90052 02 (8485)	2	Screw
9	20230 (8485)	1	Grommet
10	18873 (8485)	1	Bushing
11	36250 (8485)	1	Coupling assembly
12	35000S (8485)	1	Universal motor assembly
13	34812 (8485)	1	Caution label
14	28265 (8485)	1	Motor bracket
15	16042 (8485)	3	Sims screw
16	38260 (8485)	1	Foam tape
17	30147 (8485) or 30148 (8485) or 30149 (8485) or 40435 (8485)	1	Capacitor (capacitors and caps are vintage specific)
18	19124 (8485)	2	Large cable tie
19	25283 (8485)	2	Washer
20	29422 (8485)	1	Cap screw
21	90018 32 (8485)	2	Cap screw
22	29411 (8485)	1	Spacer
23	36249 (8485)	1	Rear motor mount assembly
24	29389 (8485)	2	Motor mount channel
25	29414 (8485)	1	Spacer
26	19918 (8485)	1	Washer
27	831 (8485)	1	Locknut
28	33871 (8485)	1	End cap
29	15942 (8485)	As required	Electrical tape

Item Number	Part Number	Quantity	Description
30	14450 (8485)	1	Small cable tie
31	34467 (8485)	1	Cable assembly universal motor capacitor
32	4435 (8485)	2	Locknut
33	3517 (8485)	1	Spring pin
34	18407 (8485)	1	Hilow screw
35	20834 (8485)	1	Drive nut trunnion assembly
36	19223 (8485)	4	Hilow link
37	128 (8485)	1	Roll pin
38	28080 (8485)	1	Fixed brake drum
39	28082 (8485)	1	Brake spring
40	28081 (8485)	1	Floating brake drum
41	19917 (8485)	1	Brake washer
42	19594 (8485)	1	Brake block assembly
43	19409 (8485)	1	Collar
44	34342 (8485)	1	Motor assembly

NOTES:

P.C. Board Assembly—Integrated Air Support System Board P/N 44047-01

Figure 5-24. P.C. Board Assembly—Integrated Air Support System Board P/N 44047-01

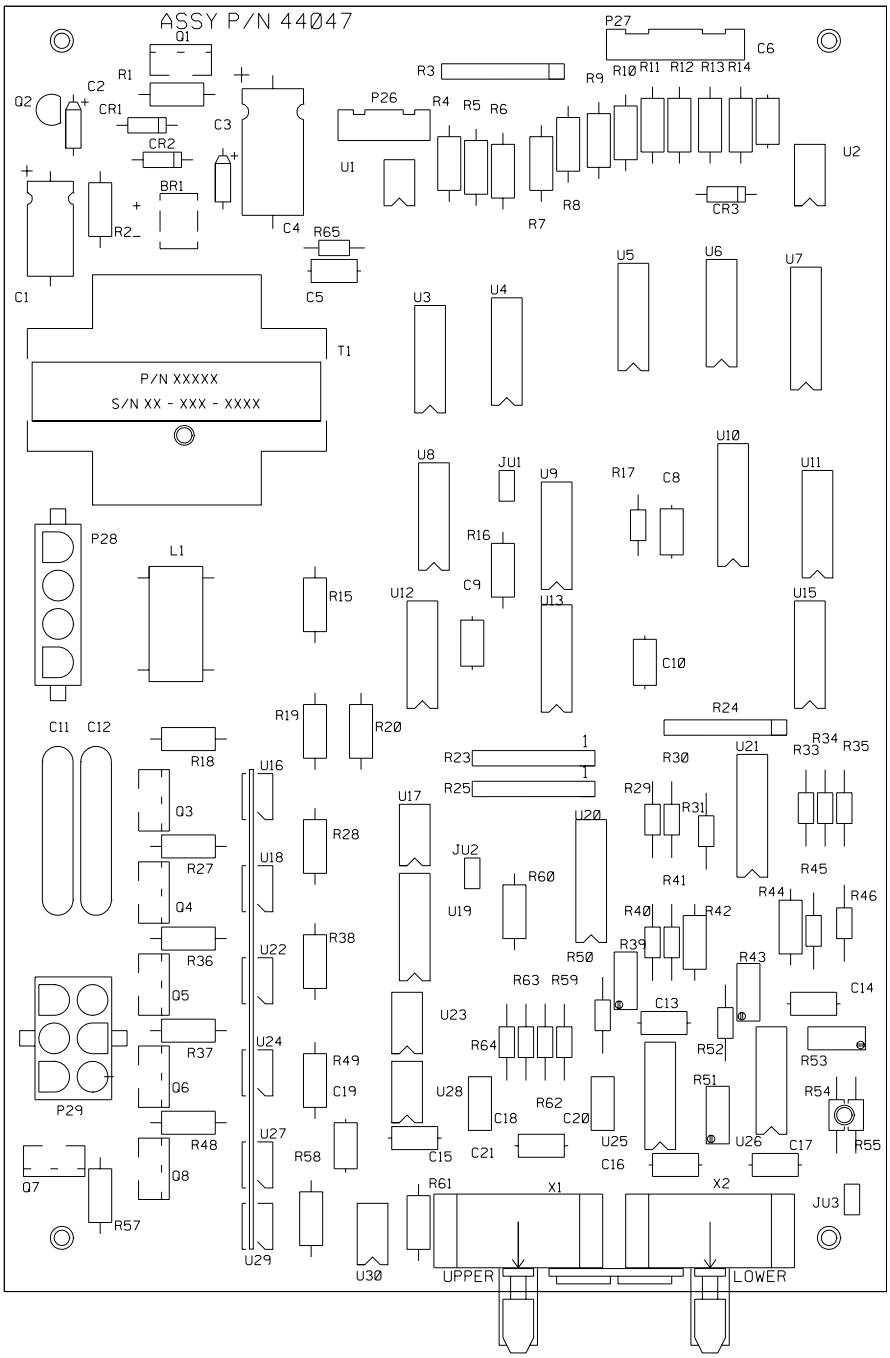

m038b037

Table 5-42. P.C. Board Assembly—Integrated Air Support System Board P/N 44047-01

Component Symbol	Part Number	Description
BR1	30205 (8485)	Diode assembly
C1	30108 (8485)	Capacitor
C2, C3	30144-105 (8485)	Capacitor
C4	30107 (8485)	Capacitor—ASIC board
C5, C6, C10, C10, C13 through C17	30109-104K (8485)	Capacitor
C8	30109-334K (8485)	Capacitor
C9, C19, C21	30109-224K (8485)	Capacitor
C11, C12	30103 (8485)	Capacitor
C18, C20	30101-474K (8485)	Capacitor
CR1 through CR3	30201-4003B (8485)	Diode silicon
JU1 through JU3	30982-2 (8485)	Jumper
L1	30610 (8485)	Toroid assembly
P26	30956-05 (8485)	Connector
P27	30934 (8485)	Connector
P28	30925 (8485)	Socket header
P29	30921 (8485)	Header—6 pin circuit
Q1	30315-9 (8485)	Volt regulator
Q2	30316-7 (8485)	Volt regulator—5V
Q3, Q4	90003-02 (8485)	Triac
Q5 through Q8	30323-02-9 (8485)	Triac
R1, R2	30014 (8485)	Resistor
R3	30012-222 (8485)	Resistor
R4	30007-271 (8485)	Resistor
R5 through R10, R12, R42, R44	30007-104 (8485)	Resistor
R11, R16	30007-275 (8485)	Resistor
R13, R14	30007-221 (8485)	Resistor
R15	30007-106 (8485)	Resistor
R17	30006-475 (8485)	Resistor

Component Symbol	Part Number	Description
R18, R27, R36, R37, R48, R57	30013-181 (8485)	Resistor
R19, R20, R28, R38, R49, R58	30007-181 (8485)	Resistor
R23	30018-273 (8485)	Resistor
R24	30012-103 (8485)	Resistor
R25	30018-105 (8485)	Resistor
R29	30019-1240B (8485)	Resistor
R30	30019-2740B (8485)	Resistor
R31	30019-2210B (8485)	Resistor
R33	30019-3481B (8485)	Resistor
R34	30019-1101B (8485)	Resistor
R35	30019-5491B (8485)	Resistor
R39, R43	30054-101 (8485)	Potentiometer
R40	30019-1581B (8485)	Resistor
R41	30019-2801B (8485)	Resistor
R45, R46	30019-1004B (8485)	Resistor
R50	30019-2000B (8485)	Resistor
R51, R53	30054-104 (8485)	Potentiometer
R52	30019-1000B (8485)	Resistor
R54	30019-1003B (8485)	Resistor
R55	30019-1503B (8485)	Resistor
R59, R62 through R64	30019-1004B (8485)	Resistor
R60, R61	30007-225 (8485)	Resistor
T1	30606 (8485)	Power transformer
U1	30419 (8485)	Integrated circuit
U2, U17, U23, U28	30405-40107 (8485)	Integrated circuit
U3, U4, U12	30400-4081B (8485)	Integrated circuit
U5, U8	30400-4071B (8485)	Integrated circuit
U6	30400-4073B (8485)	Integrated circuit
U7	30410-4049B (8485)	Integrated circuit
U9	30400-4093B (8485)	Integrated circuit
U10	30410-4040B (8485)	Integrated circuit

Component Symbol	Part Number	Description
U11	30400-4024B (8485)	Integrated circuit
U13	30400-40106 (8485)	Integrated circuit
U15	30400-4013B (8485)	Integrated circuit
U16	30420-3010 (8485)	Integrated circuit
U19	30400-4012B (8485)	Integrated circuit
U20, U21	30403-LP365 (8485)	Integrated circuit
U25, U26	30402-101HP (8485)	Integrated circuit
U30	30406-1458 (8485)	Integrated circuit
X1, X2	30710 (8485)	Transducer

P.C. Board Component Layout—Nightlight with Scale P/N 43200-01 (P8400 Models Only)

Figure 5-25. P.C. Board Component Layout—Nightlight with Scale P/N 43200-01 (P8400 Models Only)

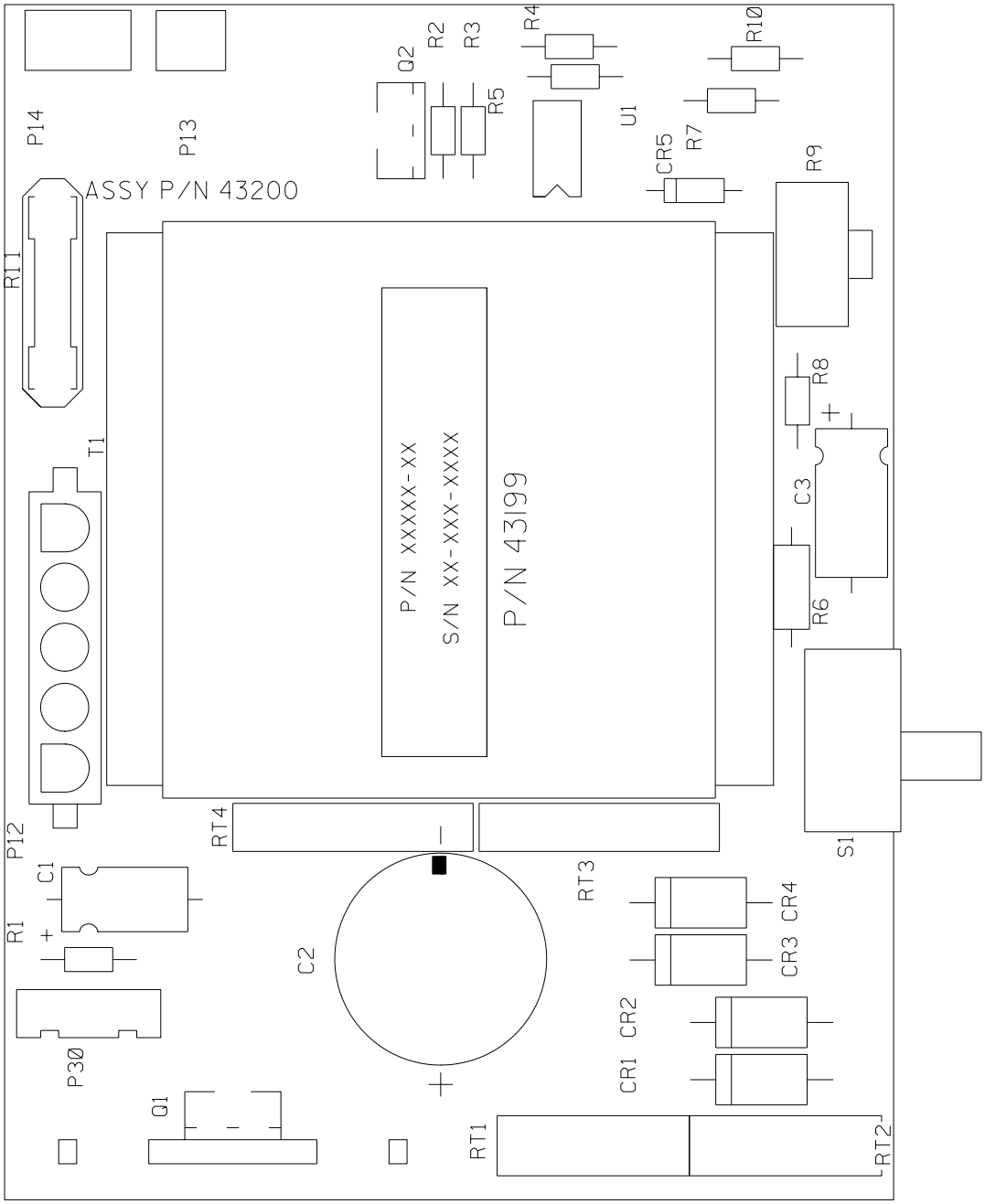

m038b040

Table 5-43. P.C. Board Component Layout—Nightlight with Scale P/N 43200-01 (P8400 Models Only)

Component Symbol	Part Number	Description
C1	30127 (8485)	Capacitor
C2	43669-478 (8485)	Capacitor
C3	30108 (8485)	Capacitor
CR1 through CR4	30210-5401B (8485)	Diode
CR5	30201-4003B (8485)	Diode silicon
P12	42835-05 (8485)	Connector
P13	30995-02 (8485)	Connector header post
P14	30995-03A (8485)	Connector header post
P30	30956-05 (8485)	Connector
Q1	39616 (8485)	Regulator assembly
Q2	30323-01 (8485)	Triac
R2	30006-472 (8485)	Resistor
R3	30006-152 (8485)	Resistor
R4	30006-105 (8485)	Resistor
R5, R7, R8	30006-153 (8485)	Resistor
R6	30007-101 (8485)	Resistor
R9	30051 (8485)	Potentiometer
R10	30006-224 (8485)	Resistor
R11	30016 (8485)	Resistor
RT1, RT2	43821-02 (8485)	PTC polyswitch
RT3, RT4	44227-01 (8485)	PTC thermistor
S1	30808 (8485)	Switch, nightlight
T1	43197 (8485)	Transformer
U1	30406-741C (8485)	Integrated circuit

P.C. Board Component Layout—Nightlight P.C. Board P/N—33577 (P8500 Models Only)

Figure 5-26. P.C. Board Component Layout—Nightlight P.C. Board P/N—33577 (P8500 Models Only)

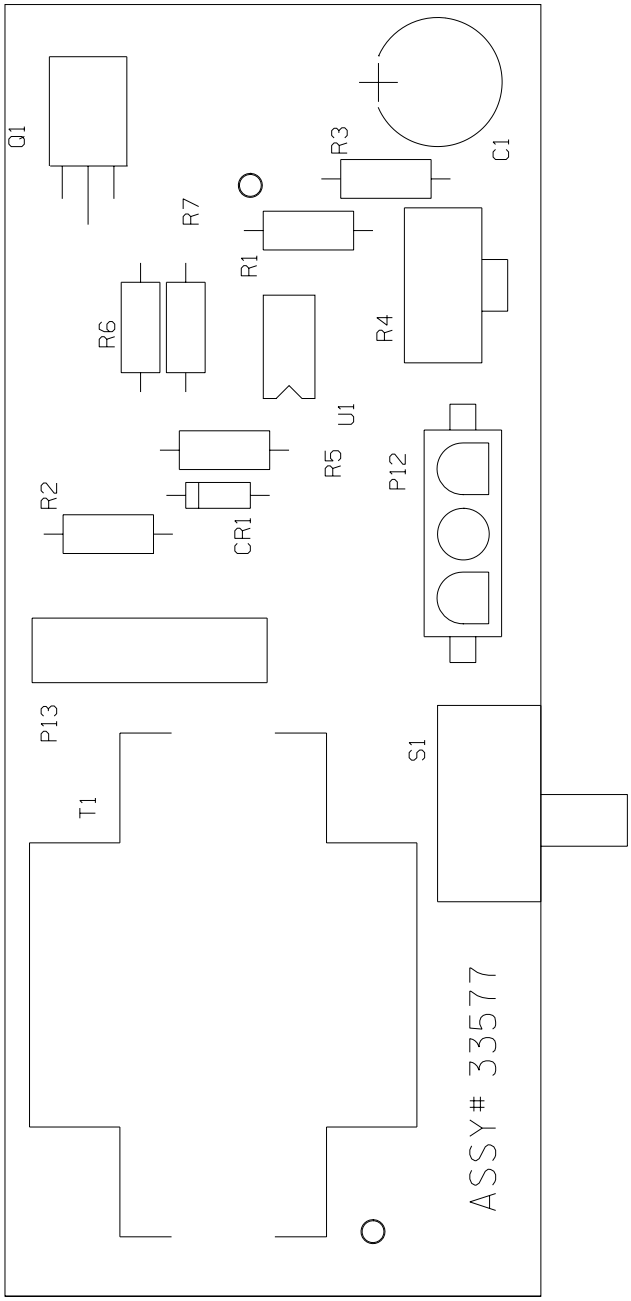

m038b042

Table 5-44. P.C. Board Component Layout—Nightlight P.C. Board P/N—33577 (P8500 Models Only)

Component Symbol	Part Number	Description
C1	27313 (8485)	Capacitor
CR1	30201-4003B (8485)	Diode silicon
P12	30905 (8485)	Connector
P13	30995-06A (8485)	Connector header post
Q1	30323-01 (8485)	Triac
R1, R3	30007-2735B (8485)	Resistor
R2	30007-1015B (8485)	Resistor
R4	30051 (8485)	Potentiometer
R5	30007-6835B (8485)	Resistor
R6	30007-1525B (8485)	Resistor
R7	30007-4725B (8485)	Resistor
S1	30808 (8485)	Switch, nightlight
T1	30605 (8485)	Transformer
U1	30406-741C (8485)	Integrated circuit

P.C. Board Component Layout—Nightlight Assembly P/N 39613-02 (P8500 Models Only)

Figure 5-27. P.C. Board Component Layout—Nightlight Assembly P/N 39613-02 (P8500 Models Only)

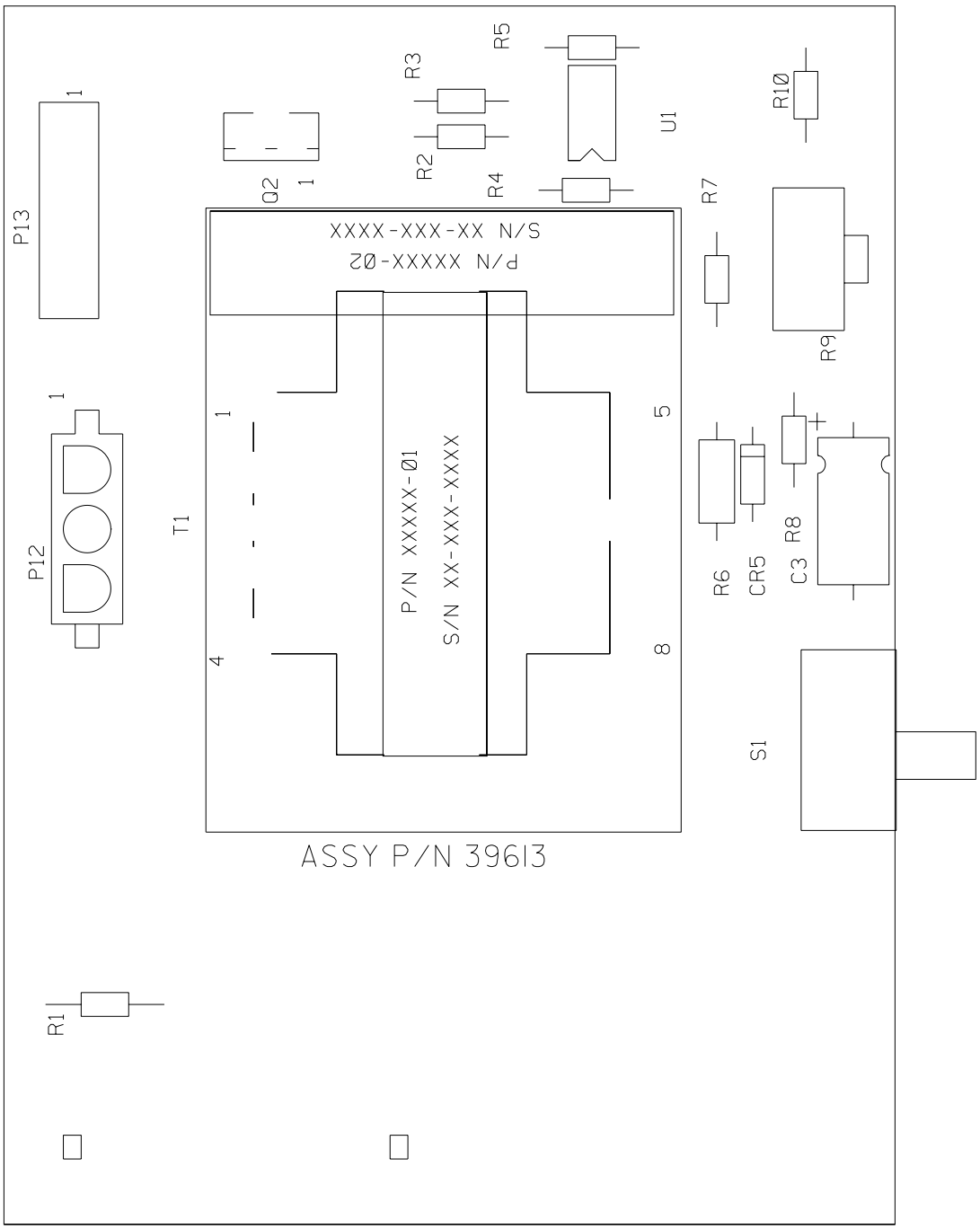

m038b044

Table 5-45. P.C. Board Component Layout—Nightlight Assembly P/N 39613-02 (P8500 Models Only)

Component Symbol	Part Number	Description
C3	30108 (8485)	Capacitor
CR5	30201-4003B (8485)	Diode silicon
P12	30905 (8485)	Connector
P13	30995-06A (8485)	Connector header post
Q2	30323-01 (8485)	Triac
R2	30006-472 (8485)	Resistor
R3	30006-152 (8485)	Resistor
R4	30006-105 (8485)	Resistor
R5, R7, R8	30006-153 (8485)	Resistor
R6	30007-101 (8485)	Resistor
R9	30051 (8485)	Potentiometer
R10	30006-224 (8485)	Resistor
S1	30808 (8485)	Switch, nightlight
T1	30605 (8485)	Transformer
U1	30406-741C (8485)	Integrated circuit

P.C. Board Component Layout—Bed Exit P.C. Board P/N 44482-01

Figure 5-28. P.C. Board Component Layout—Bed Exit P.C. Board P/N 44482-01

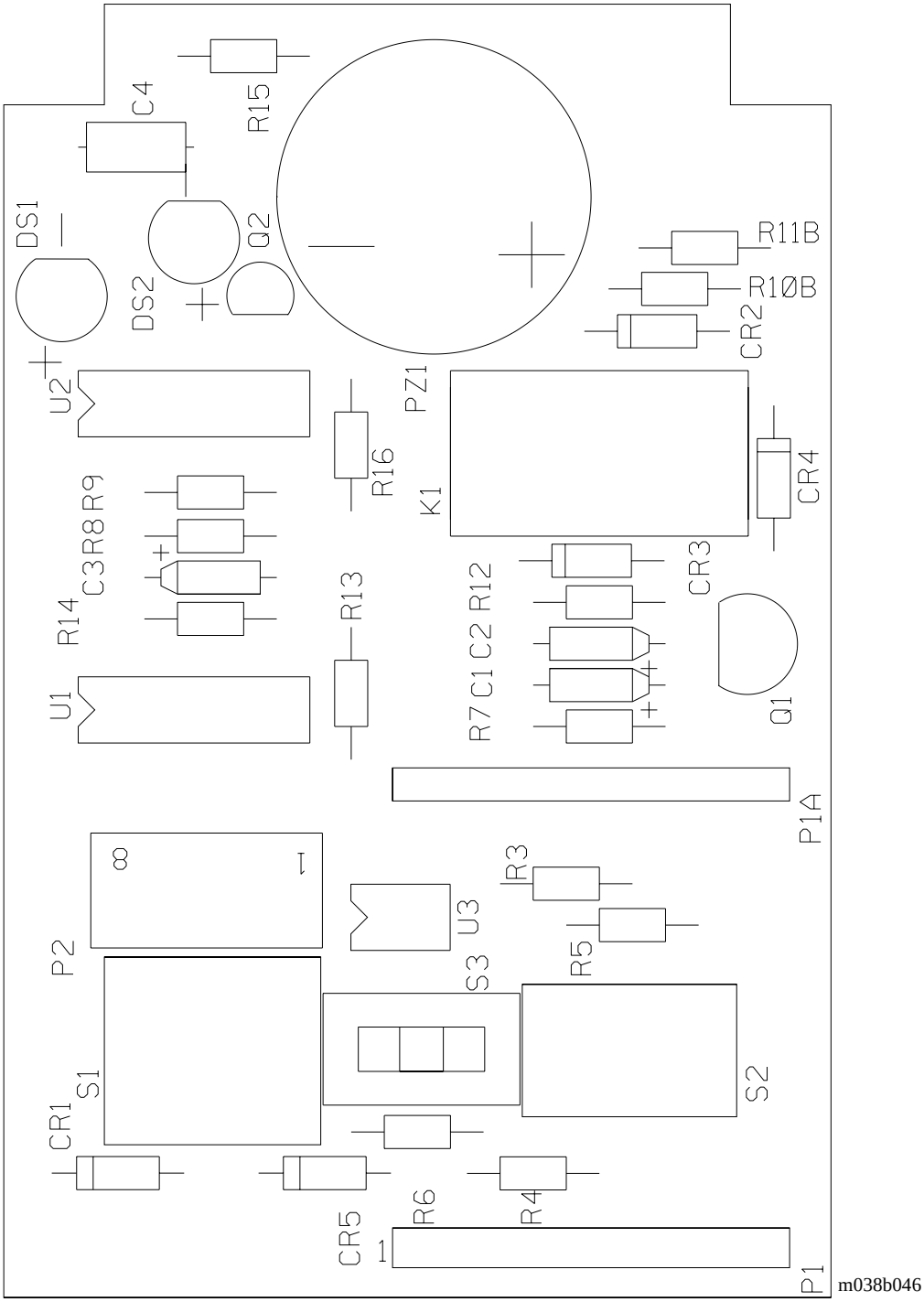

Table 5-46. P.C. Board Component Layout—Bed Exit P.C. Board P/N 44482—01

Component Symbol	Part Number	Description
C2, C3	30144-105 (8485)	Capacitor
C4	30109-104K (8485)	Capacitor
CR1 through CR5	30201-4003B (8485)	Diode silicon
DS1, DS2	30500 (8485)	LED, red
K1	30700 (8485)	Relay
P1, P1A	44479 (8485)	Connector
P2	44478-08 (8485)	Connector
PZ1	30117 (8485)	Piezo
Q1	30300-3906A (8485)	Transistor
Q2	30300-3904A (8485)	Transistor
R3, R7, R12	30006-102 (8485)	Resistor
R4, R8	30006-105 (8485)	Resistor
R5, R6	30006-225 (8485)	Resistor
R9, R10B, R11B	30016 (8485)	Resistor
R13	30006-275 (8485)	Resistor
R14	30006-475 (8485)	Resistor
R15	30006-391 (8485)	Resistor
R16	30006-472 (8485)	Resistor
S1	30811 (8485)	Switch
S2	30812 (8485)	Switch
S3	44492 (8485)	Switch
U1, U2	30400-4093B (8485)	Integrated circuit
U3	30419 (8485)	Integrated circuit

P.C. Board Component Layout—Control Board Assembly P/N 45701 (P8400 Models Only)

Figure 5-29. P.C. Board Component Layout—Control Board Assembly P/N 45701 (P8400 Models Only)

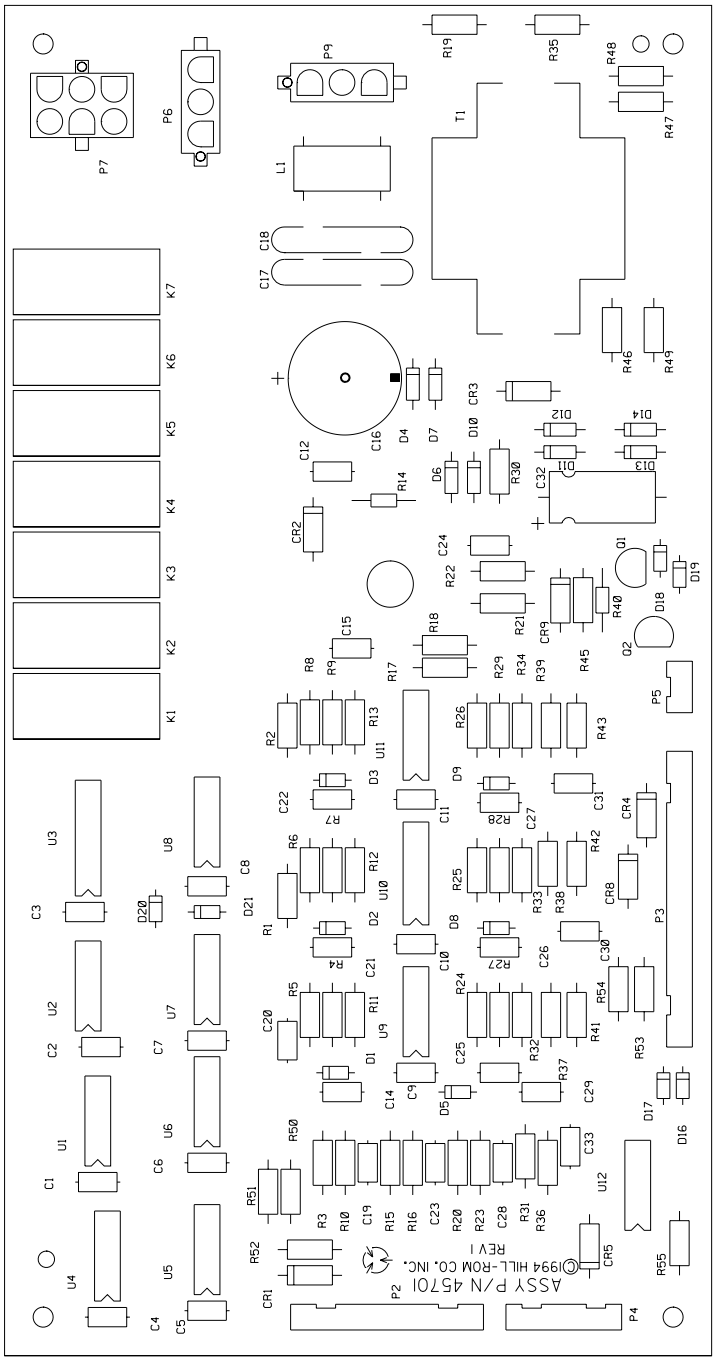

m038b048

5

Table 5-47. P.C. Board Component Layout—Control Board Assembly P/N 45701 (P8400 Models Only)

Component Symbol	Part Number	Description
C1 through C12, C24	30109-104K (8485)	Capacitor
C14, C15, C19 through C22, C25 through C31, C33	30109-683K (8485)	Capacitor
C16	43669-478 (8485)	Capacitor
C17, C18	30103 (8485)	Capacitor
C23	30109-334K (8485)	Capacitor
C32	30107 (8485)	Capacitor—ASIC board
CR1, through CR5, CR8, CR9	30214-180A (8485)	Tranzorb
D1 through D3, D5, D8, D9, D18	30200-4148B (8485)	Diode silicon
D4, D6, D7, D10 through D14, D16, D17, D19 through D21	30201-4003B (8485)	Diode silicon
K1 through K7	30702 (8485)	Relay
L1	30610 (8485)	Toroid assembly
P2	30935 (8485)	Connector
P3	30936 (8485)	Connector
P4	30934 (8485)	Connector
P5	30932 (8485)	Connector
P6	43145-03 (8485)	Connector
P7	42836-06 (8485)	Connector
P9	30905 (8485)	Connector
Q1	27321 (8485)	Transistor JFET
Q2	30300-3906A (8485)	Transistor
R1, R3, R4, R7, R9, R11 through R13, R15, R17, R20, R24 through R29, R31, R37 through R39, R53 through R55	30007-474 (8485)	Resistor
R2, R5, R6, R8, R10, R16, R18, R23, R32 through R34, R36, R41 through R43, R51	30007-472 (8485)	Resistor

Component Symbol	Part Number	Description
R14, R40	30016 (8485)	Resistor
R19	30007-106 (8485)	Resistor
R21, R45	30007-103 (8485)	Resistor
R22	30007-182 (8485)	Resistor
R30	30007-221 (8485)	Resistor
R35, R47, R48	30007-275 (8485)	Resistor
R46, R49	27316 (8485)	Resistor
R50, R52	30007-102 (8485)	Resistor
T1	30606 (8485)	Power transformer
U1	30400-40106 (8485)	Integrated circuit
U2	30400-4072B (8485)	Integrated circuit
U3	30414-2804A (8485)	Integrated circuit
U4	30400-4093B (8485)	Integrated circuit
U5	30400-4001B (8485)	Integrated circuit
U6, U7, U9, U11, U12	30400-4081B (8485)	Integrated circuit
U8	30400-4071B (8485)	Integrated circuit
U10	30410-4049B (8485)	Integrated circuit

NOTES:

P.C. Board Component Layout—Control Board Assembly P/N 45789 (P8500 Models Only)

Figure 5-30. P.C. Board Component Layout—Control Board Assembly P/N 45789 (P8500 Models Only)

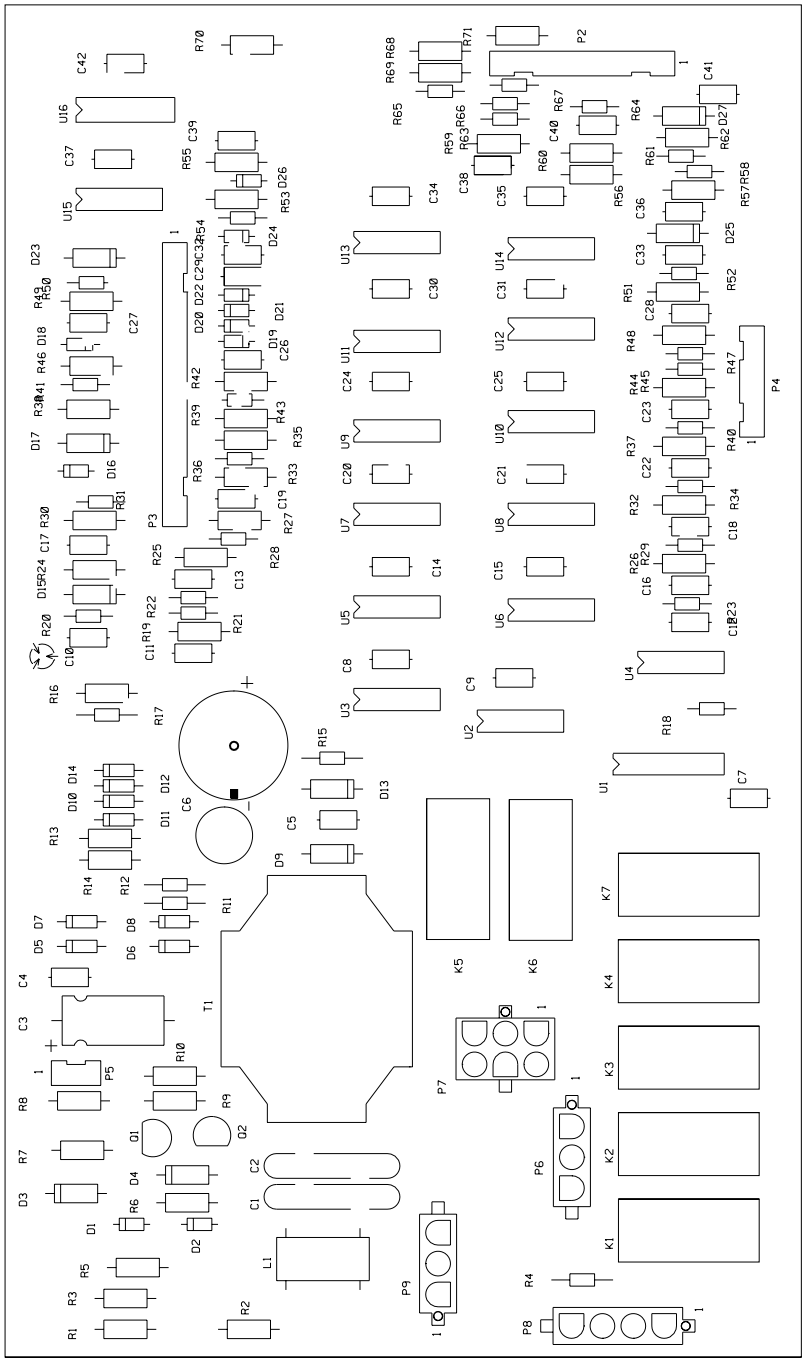

m038b054

5

Table 5-48. P.C. Board Component Layout—Control Board Assembly P/N 45789 (P8500 Models Only)

Component Symbol	Part Number	Description
C1, C2	30103 (8485)	Capacitor
C3	30107 (8485)	Capacitor—ASIC board
C4, C5, C7 through C9, C12, C14, C15, C20, C21, C24, C25, C30, C31, C34, C35, C37, C42	30109-104K (8485)	Capacitor
C6	43669-478 (8485)	Capacitor
C10, C11, C13, C17, C19, C22, C23, C26 through C29, C32, C33, C36, C38 through C41	30109-683K (8485)	Capacitor
C16, C18	30109-334K (8485)	Capacitor
D1, D16, D18, D19, D22, D24, D26	30200-4148B (8485)	Diode silicon
D2, D5 through D8, D10 through D12, D14, D20, D21	30201-4003B (8485)	Diode silicon
D3, D4, D9, D13, D15, D17, D23, D25, D27	30214-180A (8485)	Tranzorb
K1 through K7	30702 (8485)	Relay
L1	30610 (8485)	Toroid assembly
P2	30935 (8485)	Connector
P3	30936 (8485)	Connector
P4	30934 (8485)	Connector
P5	30932 (8485)	Connector
P6	43145-03 (8485)	Connector
P7	42836-06 (8485)	Connector
P8	43145-04 (8485)	Connector
P9	30905 (8485)	Connector
Q1	30300-3906A (8485)	Transistor
Q2	27321 (8485)	Transistor JFET
R1, R3, R5	30007-275 (8485)	Resistor
R2	30007-106 (8485)	Resistor
R4, R11, R12, R15, R17	30016 (8485)	Resistor

Component Symbol	Part Number	Description
R6, R10	30007-103 (8485)	Resistor
R7	30007-4715B (8485)	Resistor
R8	30014 (8485)	Resistor
R9	30007-182 (8485)	Resistor
R13, R14	27316 (8485)	Resistor
R16	30007-221 (8485)	Resistor
R18, R23	30006-102 (8485)	Resistor
R19, R24 through R27, R30, R32, R33, R35, R37 through R39, R42, R44, R46, R48, R49, R51, R53, R55 through R57, R59, R60, R62, R68 through R71	30007-474 (8485)	Resistor
R20 through R22, R28, R29, R31, R34, R36, R40, R41, R43, R45, R47, R50, R52, R54, R58, R61, R63 through R67	30006-472 (8485)	Resistor
T1	30606 (8485)	Power transformer
U1	30414-2804A (8485)	Integrated circuit
U2, U3, U11	30400-4073B (8485)	Integrated circuit
U4	30400-4072B (8485)	Integrated circuit
U5, U8, U9, U14, U15	30400-4081B (8485)	Integrated circuit
U6, U10	30400-4001B (8485)	Integrated circuit
U7, U13	30400-4071B (8485)	Integrated circuit
U12	30400-4075B (8485)	Integrated circuit
U16	30410-4049B (8485)	Integrated circuit

NOTES:

P.C. Board Component Layout—Interface Board P/N 44578

Figure 5-31. P.C. Board Component Layout—Interface Board P/N 44578

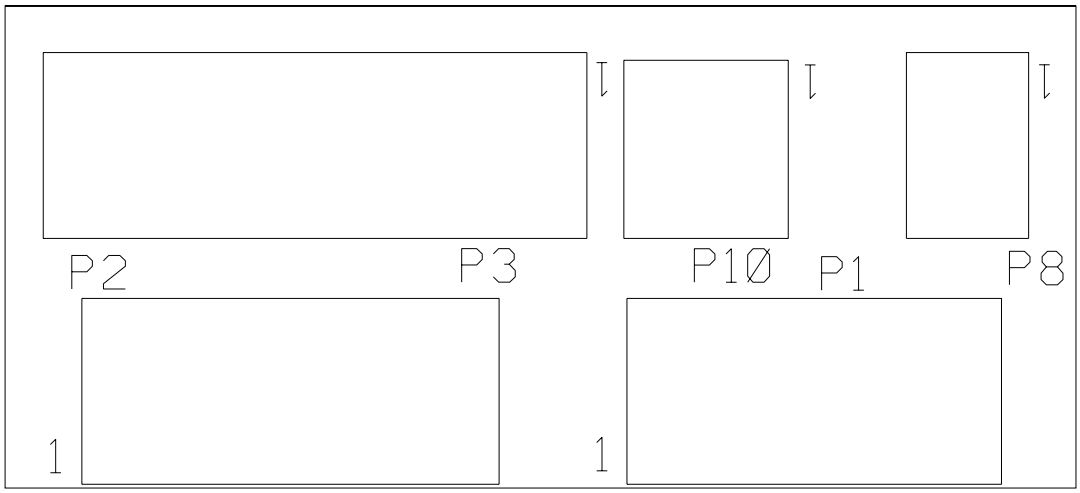

m038b058

Table 5-49. P.C. Board Component Layout—Interface Board P/N 44578

Component Symbol	Part Number	Description
P1	44478-08 (8485)	Connector
P2	44478-09 (8485)	Connector
P3	44478-12 (8485)	Connector
P8	44478-02 (8485)	Connector
P10	44478-03 (8485)	Connector

5

Chapter 6
General Procedures

Chapter Contents

Cleaning and Care . . . . . 6 - 3
- Steam Cleaning . . . . . 6 - 3
- Suggestions for Easy Maintenance . . . . . 6 - 3
- Hard to Clean Spots . . . . . 6 - 3
- Disinfection . . . . . 6 - 3

Lubrication Requirements . . . . . 6 - 4
Preventive Maintenance . . . . . 6 - 5
- Preventive Maintenance Schedule . . . . . 6 - 6
- Preventative Maintenance Checklist . . . . . 6 - 8

Tool and Supply Requirements . . . . . 6 - 9
Extraction Tools . . . . . 6 - 10

6

NOTES:

Cleaning and Care

WARNING:
Unplug the bed from its power source during service or cleaning. Refer to the service manual or in-service manual for additional precautions.

Steam Cleaning

Do not use any steam cleaning device on the Retractable bed. The excessive moisture involved can damage mechanisms and components in the Retractable bed. Clean the bed with a lightly dampened cloth and ordinary disinfectants.

Suggestions for Easy Maintenance

Use neutral soap suds and lukewarm water to remove soil or stains for a fresh new appearance. Use a cloth rinsed with clean water and dry.

Hard to Clean Spots

Use standard household cleaners and/or a soft bristle brush to remove troublesome spots or stains that will not come out easily. Heavy dried-on soil and excreta may first require soaking to loosen.

NOTE:
Do not use harsh cleaners, solvents, or detergents.

Disinfection

Dilute disinfectants and/or germicides as specified on the manufacturer’s label.

NOTE:
Use only those solutions recommended by the manufacturer.

Lubrication Requirements

Hill-Rom uses oilite bearings and bushings in several places throughout the Retractable bed. Oilite bearings and bushings have pores that retain oil giving them a self-lubricating quality. This self-lubricating quality is neutralized if you use any lubricant containing silicone on them or anywhere else on the bed.

CAUTION:
Do not use any lubricant containing silicone anywhere on the Retractable bed.

The following lubricants can be safely used on the Retractable bed:

- P/N 8252 M-1 penetrating oil (small bottle - use on oilite bushings and bearings)
- P/N SA3351 red lithium grease (small tube - use on drive screws)
- P/N SA3352 gear grease (small tube - use on motor gears only)
- P/N SA0646 Teflon spray lubricant (dry) (aerosol spray can - use anywhere else bed needs lubrication)

Preventive Maintenance

The Retractable bed must have an effective maintenance program. We recommend that you perform preventive maintenance and testing for Joint Commission on Accreditation of Healthcare Organizations (JCAHO) annually. This not only meets JCAHO requirements, but will help to ensure a long and productive life for the Retractable bed. This will help minimize downtime due to excessive wear failures.

The preventive maintenance schedule that follows is intended to guide a technician through a normal preventive maintenance procedure on the Hill-Rom Retractable bed. Check each item on the schedule, and make any necessary adjustments during the maintenance process.

The preventive maintenance schedule is intended to be used in conjunction with the preventive maintenance checklist following it. This checklist is designed to keep a running history of problems and subsequent repair costs for one individual Retractable bed. However, the facility can modify this checklist or invent another to fit their needs. Keeping close records and maintaining the Retractable bed and its accessories are two good ways of reducing downtime and at the same time, keeping the nursing staff happy and efficient.

WARNING:
Only facility-authorized maintenance personnel should perform preventive maintenance on the Retractable Bed. Preventive maintenance performed by unauthorized personnel could result in personal injury or equipment damage.

Preventive Maintenance Schedule

Table 6-1. Preventative Maintenance Schedule

Function	Procedure
Head limits	Run the head function to the upper and lower limits to ensure proper function of the limit switches.
Knee limits	Run the knee function to the upper and lower limits to ensure proper function of the limit switches.
Hilow limits	Run the hilow function to the upper and lower limits to ensure proper function of the limit switches. Some vintage P8400 beds are equipped with a spherical spacer to prevent the bed from crashing during operation. Inspect the spacer for cracks, wear, etc. Replace if necessary.
Contour limit	When the head section is activated from the flat position, the knee will raise to 15° to form a contour position. This function is defeated by the knee lockout switch.
Trendelenburg limits	Run the bed into both Trendelenburg and Reverse Trendelenburg to check the limits. Check the degree indicator for accuracy.
Drive screws	Inspect, clean, and lubricate the head, knee, and hilow drives.
Hilow brake spring	The hilow brake spring requires periodic cleaning. Grease and other lubricants find their way to the brake surface. This can cause the hilow to slip.
Lockout switches	Test each lockout individually to ensure proper operation.
Brake and steer	Test the brakes to determine if the bed moves when the brake is activated. Adjust if required. Inspect the steer activation, and adjust if required.
Caster tires	Check caster tires for cuts, wear, tread, etc. Replace if necessary.
Siderail controls	Test the switches in the siderails for proper operation. Also check for momentary operation at this time.
Siderail frame	Test the siderail for proper latching. Adjust if required.
Pivot points	Lubricate all pivot points on the bed.
Power cord and plug	Check the cord and plug for cuts, nicks, or breaks. Replace if required.

Function	Procedure
Motor capacitors	Check the capacitors to make sure they are not weak or defective. Replace if required.
CPR release	Test the CPR release for proper operation.
Night light	Check to make sure the night light functions properly. Adjust the sensitivity if required.
Bed exit system	Check that the bed exit system works properly and that it places the appropriate call when activated.
Head and foot panels	Check the aesthetics.
Overall appearance	Touch up the paint where necessary. Inspect the labels and replace them if necessary. Check the general aesthetics.
LED indicators	Check all LEDs to ensure proper operation.
Communications	Inspect and test the communication junction box. Test all SideCom Communication System features for proper function. Inspect the communication cable, including the male and female pins in the plug.
Integrated air support system	Check the mattress for punctures, cuts, or tears. Check the air compressor unit. Check all hose connections and O-rings to prevent air leaks. Test the “Excessive Air Loss” feature.
Electrical test	Test the bed for electrical leakage.

Preventative Maintenance Checklist

Table 6-2. Preventive Maintenance Checklist

Date																							**Function**
Hill-Rom Company Inc.	**Manufacturer**																						Head limits
																							Knee limits
																							Hilow limits
																							Contour limit
																							Trendelenburg limits
																							Drive screws
																							Hilow brake spring
																							Lockout switches
	Model Number																						Brake and steer
																							Caster tires
																							Siderail controls
																							Siderail frame
																							Pivot points
																							Power cord and plug
																							Motor capacitors
																							CPR release
	Serial Number																						Night light
																							Bed exit system
																							Head and foot panels
																							Overall appearance
																							LED indicators
																							Communications
																							Integrated air support
																							Electrical test
	Total Cost for This Page																						Labor Time:
																							Repair Cost:
																							Inspected By:
																							Legend L=Lube C=Clean A=Adjust R=Repair or Replace O=Okay N=Not Applicable Remarks:

6

Tool and Supply Requirements

The following tools are required to service the Retractable Bed:

- Phillips head screwdriver
- Standard screwdriver
- T25 torx head screwdriver
- 9/16" wrench
- 5/8" wrench
- 1/2" wrench
- 3/8" wrench
- 3/4" wrench
- 11/16" wrench
- Torque wrench
- 5/32" allen wrench
- Crescent wrench
- Vise grip
- 1/2" socket and ratchet
- 1/4" nut driver
- 3/8" nut driver
- Punch
- Hammer
- External retaining ring pliers
- Pliers
- 30 watt maximum solder iron

Extraction Tools

Figure 6-1 on page 6-10 illustrates the five extraction tools used by Hill-Rom. The part numbers are located beside the extraction tool along with a brief description of where the tool is most commonly used. See the section “Ordering Service Parts” on page 5-5 for information on ordering parts.

Figure 6-1. Extraction Tools

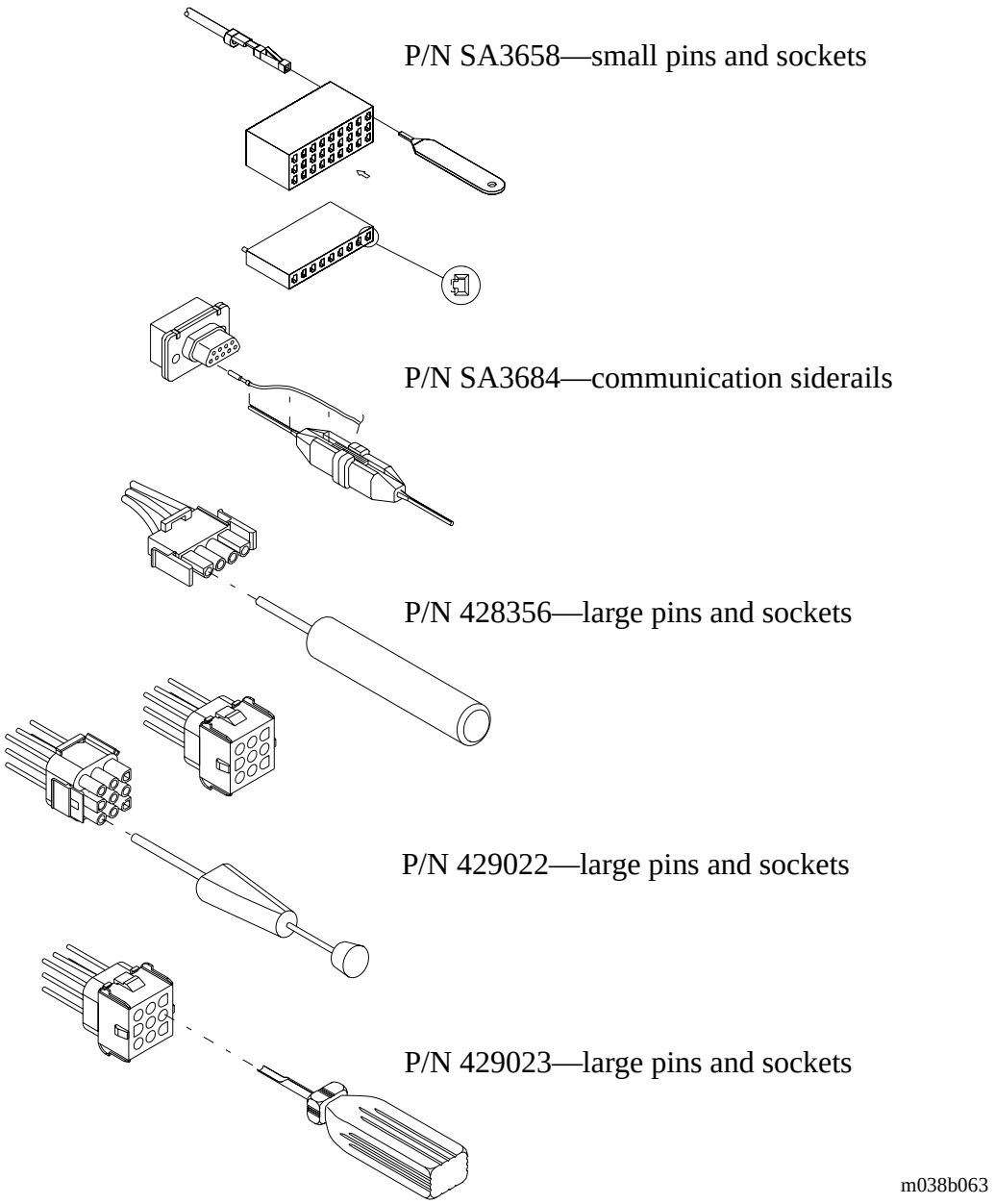

6

Chapter 7
Accessories

Chapter Contents

Siderail Option ID . . . . . 7 - 3
Accessories . . . . . 7 - 4
Fracture Frame Adapter Socket—P847B/P847C . . . . . 7 - 5
Installation . . . . . 7 - 5
Removal . . . . . 7 - 5
Roller Bumper Assembly—P818C08 . . . . . 7 - 6
Installation . . . . . 7 - 6
Removal . . . . . 7 - 7
Cane Bumper Assembly—P284B-33 . . . . . 7 - 8
Installation . . . . . 7 - 8
Removal . . . . . 7 - 9
Trapeze Support Assembly—P844 (P8400 Models Only) . . . . . 7 - 10
Installation . . . . . 7 - 10
Removal . . . . . 7 - 11
Trapeze Support Assembly—P844A-48 or P844A-33 (P8500 Models Only) . . . 7 - 12
Installation . . . . . 7 - 12
Removal . . . . . 7 - 13
Bed Extender Assembly—P9913A . . . . . 7 - 14
Installation . . . . . 7 - 14
Removal . . . . . 7 - 15

NOTES:

Siderail Option ID

Hill-Rom offers basic siderail options with the Retractable bed. See table 7-1 on page 7-3 for the siderail options.

Table 7-1. Siderail Option ID

Siderail Option	Description
52	Bed functions, nurse call, and entertainment
53	Bed functions, nurse call, entertainment, and lighting
54	Bed functions, nurse call, entertainment, and bed exit
55	Bed functions, nurse call, entertainment, bed exit, and lighting
56	Bed functions, nurse call, and bed exit
59	Bed functions and future options
50	Bed functions and no future options.

Accessories

Table 7-2. Accessories List

Part Number	Description
P818C08	Roller bumpers
P5038	Dynamic Sleep Surface upgrade kit (P8400 models only)
P5039	Dynamic Sleep Surface upgrade kit (P8500 models only)
P4069A-4B	Head panel assembly (wooden)
P4069A-5B	Foot panel assembly (wooden)
P4048B-01*	Head panel assembly (blow molded)
P4059*	Foot panel assembly (blow molded)
P2217	IV rod
P923CD	Mattress complete (air)
P923ED	Flame retardant mattress (air)
P806B	SureRest III mattress
P806C	SureRest III mattress (flame retardant)
P844	Trapeze support (P8400 models only)
P844A§	Trapeze support (P8500 models only)
P9913A	Bed extender
P847B	Fracture frame adapter set—3/4" pin
P847C	Fracture frame adapter set—1/2" pin
P49502	Patient phone
P855C1	Siderail pads—head and foot
P855C1H	Siderail pads—head only

* Specify high pressure laminate color.

§ Specify dash number if product color is:

-48 Light neutral (off-white)

-33 Taupe (brown)

7.1 Fracture Frame Adapter Socket—P847B/P847C

Hill-Rom has two different fracture frame adapter socket sets available to handle most fracture frame equipment. The model P847B sockets have a 3/4" inside diameter, while the P847C sockets have a 1/2" inside diameter. Please specify which size is needed when ordering.

Installation

Tools required: None

1. Insert the short adapter tubes (A) into the available IV sockets at the head end of the bed (see figure 7-1 on page 7-5).

Figure 7-1. Fracture Frame Adapter Socket Installation—P847B/P847C

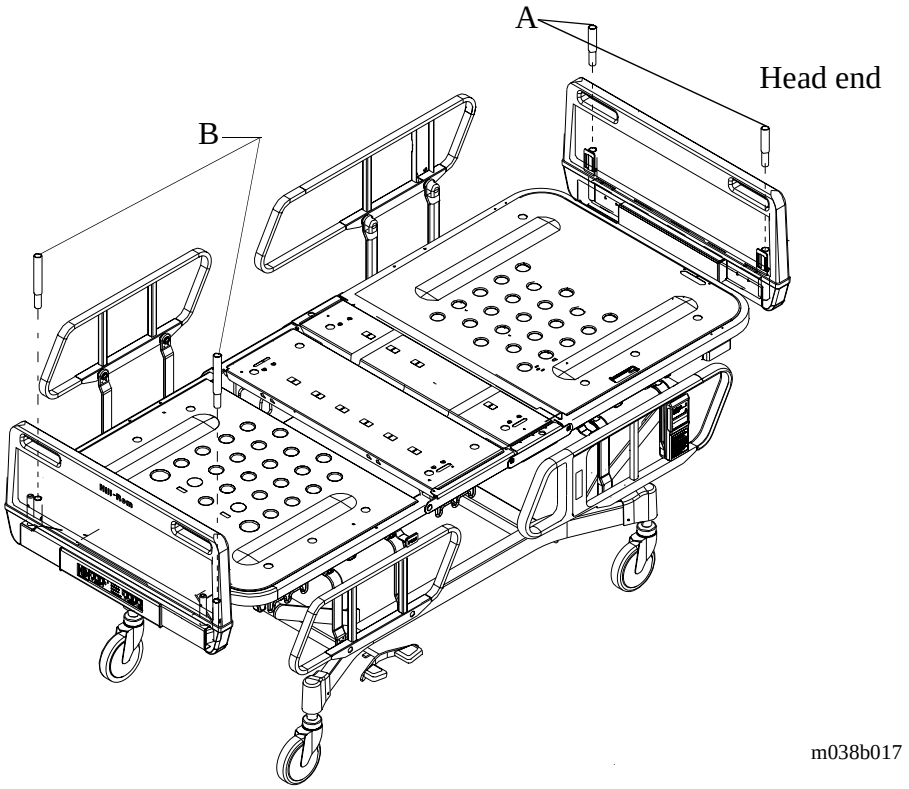

2. Insert the long adapter tubes (B) into the available IV sockets at the foot end of the bed.

Removal

Reverse the installation procedure for removal of the fracture frame adapter sockets.

7.2 Roller Bumper Assembly—P818C08

Hill-Rom provides two different docking and wall protection features. The bed can be equipped with either Enviro-Care docking bumpers or wall protecting roller bumpers. (Can be retrofitted as desired.)

Installation

Tools required: Crescent wrench

Using the crescent wrench, install the two bolts (A) to secure the roller bumper (B) to the bed frame (C) (see figure 7-2 on page 7-6).

Figure 7-2. Roller Bumper Assembly—P818C08

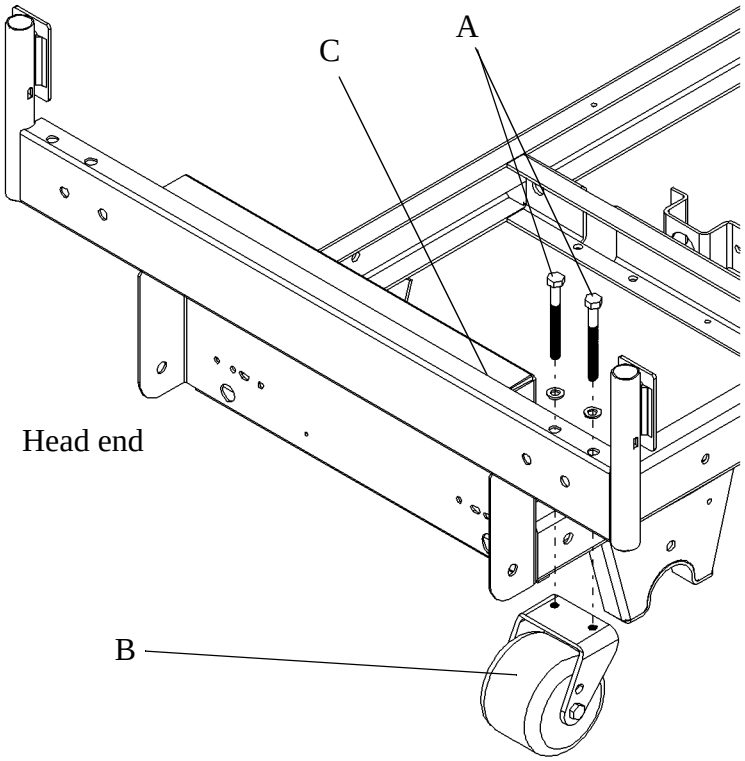

NOTE:
Use only one pair of bumpers per bed. Use either top or bottom mounted bumpers.

NOTE:
Use P818C08 bottom/top mount roller bumpers for light neutral (off-white) beds and for taupe (brown) beds.

Removal

Reverse the installation procedure for removal of the roller bumper assembly.

7.3 Cane Bumper Assembly—P284B-33

Installation

Tools required: Crescent wrench

1. Insert the cane bumper (A) into hole (B) located on the base frame (C) at the head end of the bed (see figure 7-3 on page 7-8).

Figure 7-3. Cane Bumper Assembly—P284B-33

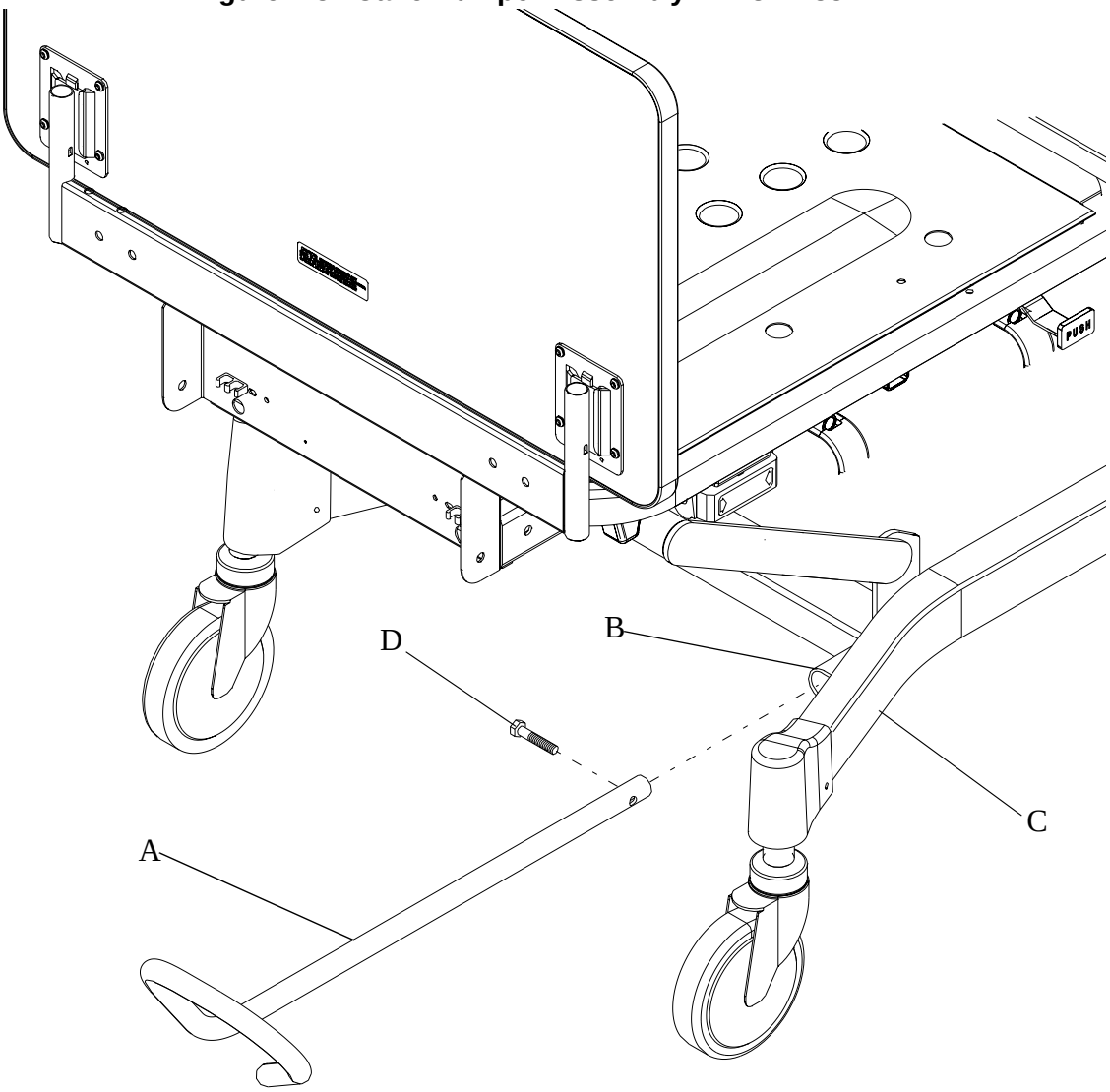

m038b019

2. Using the crescent wrench, install bolt (D) to secure the cane bumper (A) to the main frame of the bed.

CAUTION:
To prevent tripping, bend in the cane bumper to be in the upward position. Failure to do so could result in personal injury or equipment damage.

Removal

Reverse the installation procedures for removal of the cane bumper assembly.

7.4 Trapeze Support Assembly—P844 (P8400 Models Only)

The trapeze support assembly can be secured only to the head end of the main frame.

Installation

Tools required:	1/2" socket	Drive ratchet
	1/4" socket	1/4" wrench

1. Remove the hole plugs (A) from lower frame at end of bed to which the trapeze bracket is to be installed (see figure 7-4 on page 7-10).

Figure 7-4. Trapeze Support Assembly—P844 (P8400 Models Only)

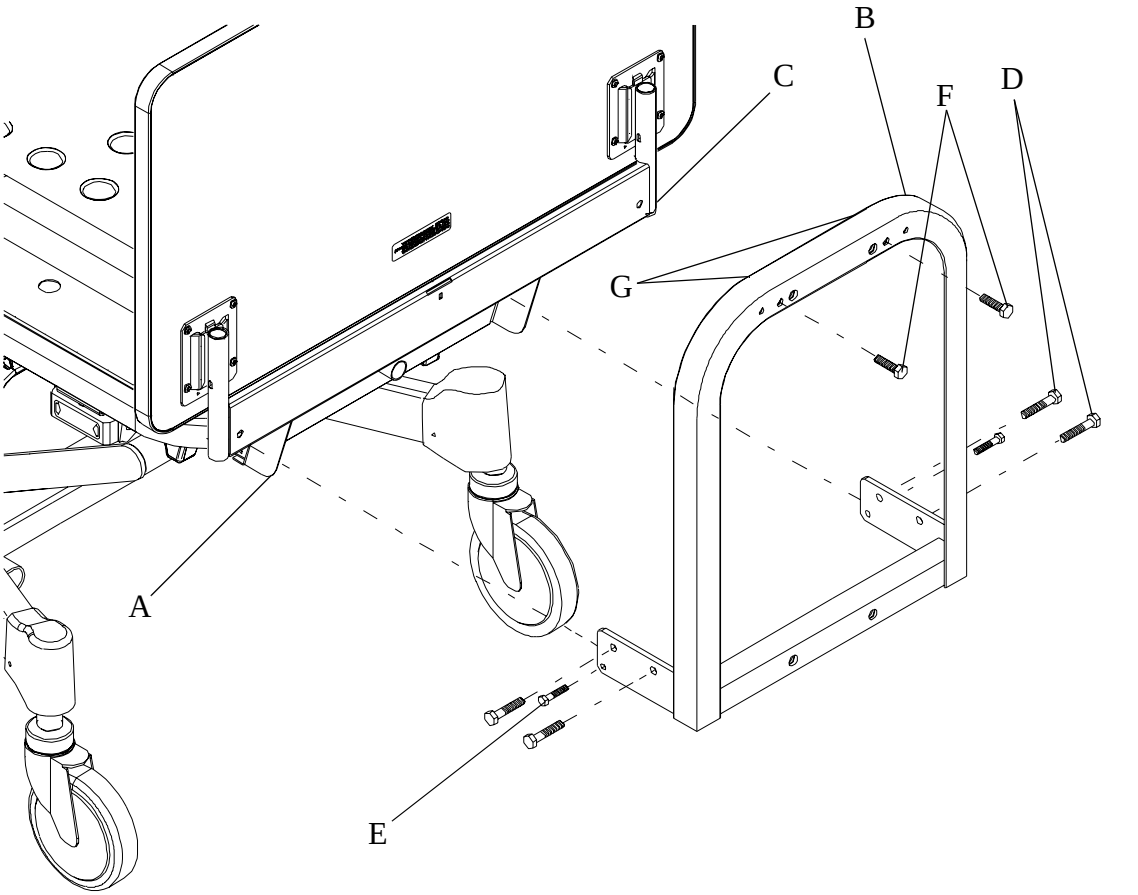

2. Position the trapeze bracket (B) assembly to the main frame (C).

3. Using the drive ratchet and 1/2" socket, install the screws (D) to secure the trapeze bracket (B) to the main frame (C) of the bed.

4. Using the drive ratchet and 1/4" socket, install the screws (E) to secure the trapeze bracket (B) to the main frame (C) of the bed.

5. Use 1/4-20 screws (F) and locknuts (G) to prevent side slippage of trapeze used.

Removal

Reverse the installation procedures to remove the trapeze support assembly.

7.5 Trapeze Support Assembly—P844A-48 or P844A-33 (P8500 Models Only)

The trapeze support assembly can be secured only to the head end of the main frame.

Installation

Tools required:	3/8" socket	Drive ratchet
	1/4" socket	1/4" wrench

1. Remove the hole plugs (A) from lower frame at end of bed to which the trapeze bracket is to be installed (see figure 7-5 on page 7-12).

Figure 7-5. Trapeze Support Assembly Instructions—P844A-48 or P844A-33 (P8500 Models Only)

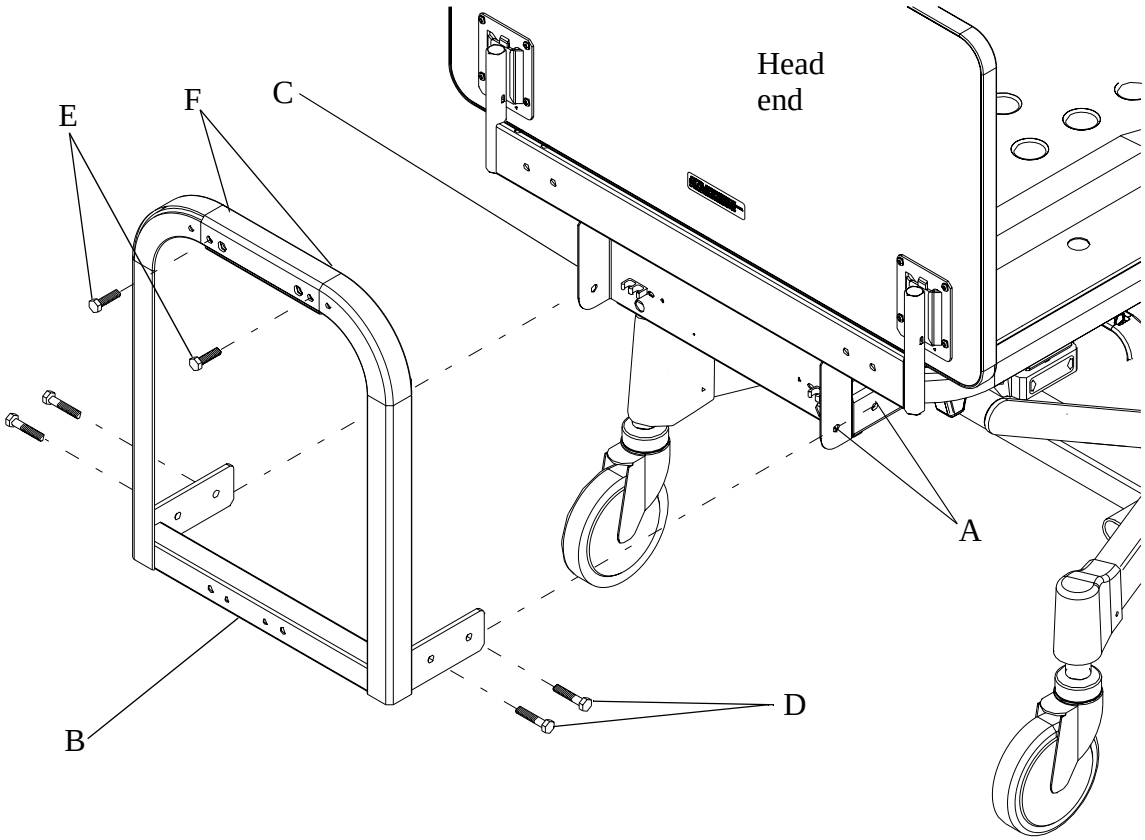

2. Position the trapeze bracket (B) assembly to the main frame (C).

3. Using the drive ratchet and 3/8" socket, install the screws (D) to secure the trapeze bracket (B) to the main frame (C) of the bed.

4. Use 1/4-20 screws (E) and locknuts (F) to prevent side slippage of the trapeze used.

Removal

Reverse the installation procedures to remove the trapeze support assembly.

7.6 Bed Extender Assembly—P9913A

The bed extender assembles to the foot end of the bed and allows taller residents to keep their feet on the bed. The foot panel must be removed to install the bed extender.

Installation

Tools required: None

1. Lift the bed foot end panel vertically, and remove it from the bed.

2. Lift the foot section (A) manually into the first notch of the foot rack (see figure 7-6 on page 7-14).

Figure 7-6. Bed Extender Assembly—P9913A

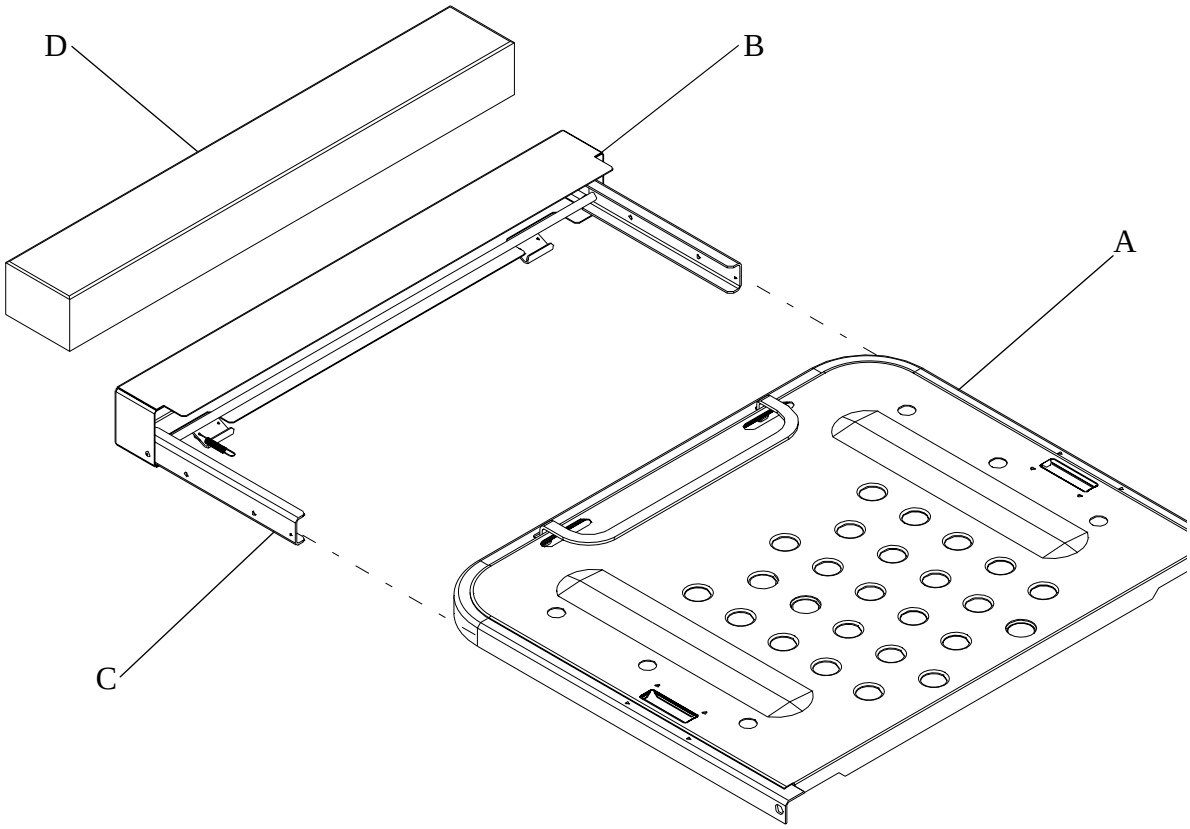

3. Fold down the mattress stop on the foot section (A) of the bed.

4. Attach the bed extender (B) by sliding the channels (C) over the end of the foot section (A) of the bed.
5. Push the bed extender (B) until it locks into place.
6. Remove the foot section (A) from the first notch of the foot rack, and lower the foot section down.
7. Place the bed extender pad (D) onto the frame with the magnets down.
8. Assemble the foot end panel to the bed.

Removal

Reverse the installation procedures for removal of the bed extender assembly.

NOTES:

Schematic Wiring Diagram—Bed Wiring Diagram P/N 45926

Back to Chapter 3

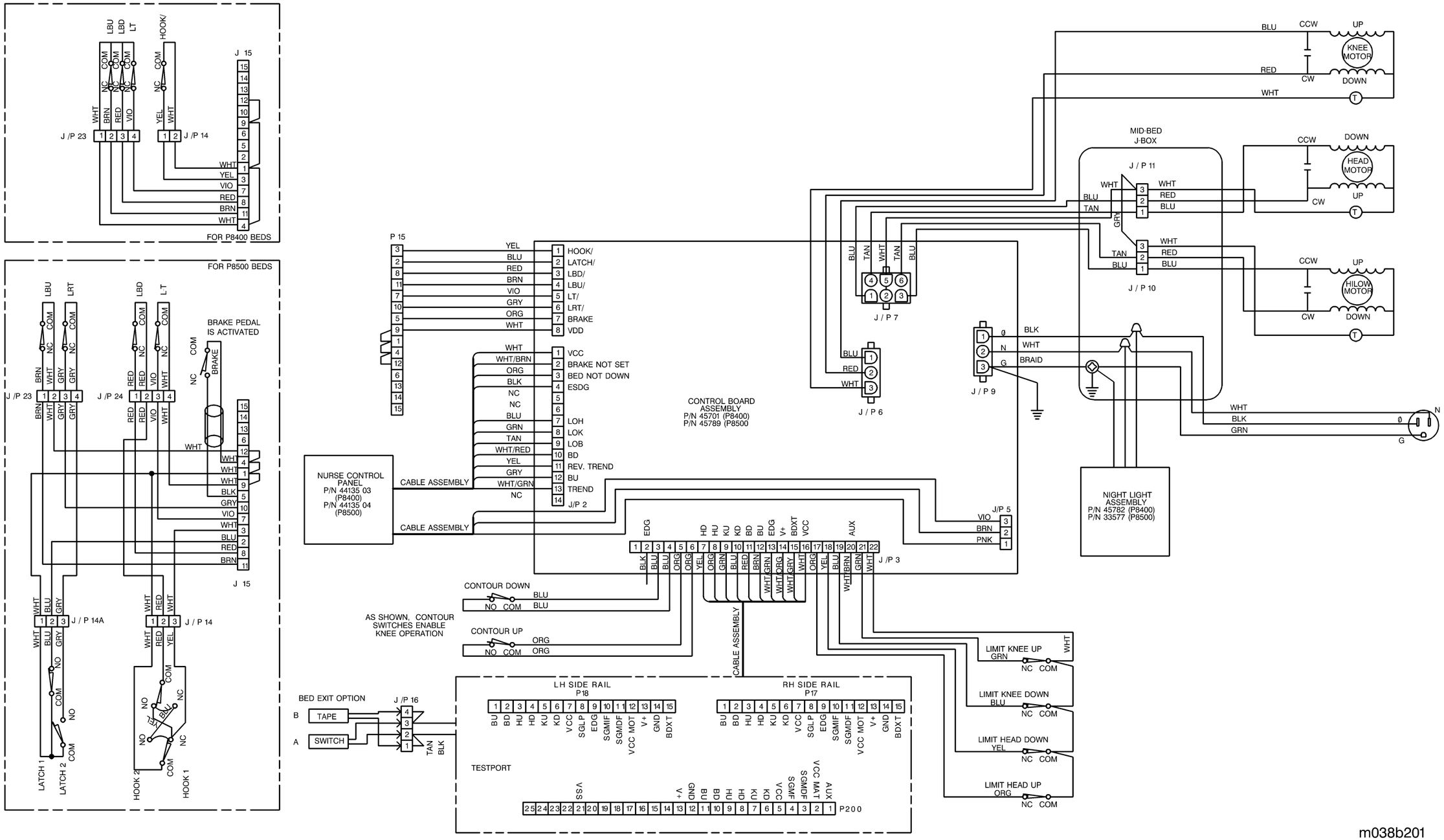

m038b201

Schematic Wiring Diagram—Integrated Air Support System Board P/N 44047-01

Back to Chapter 3

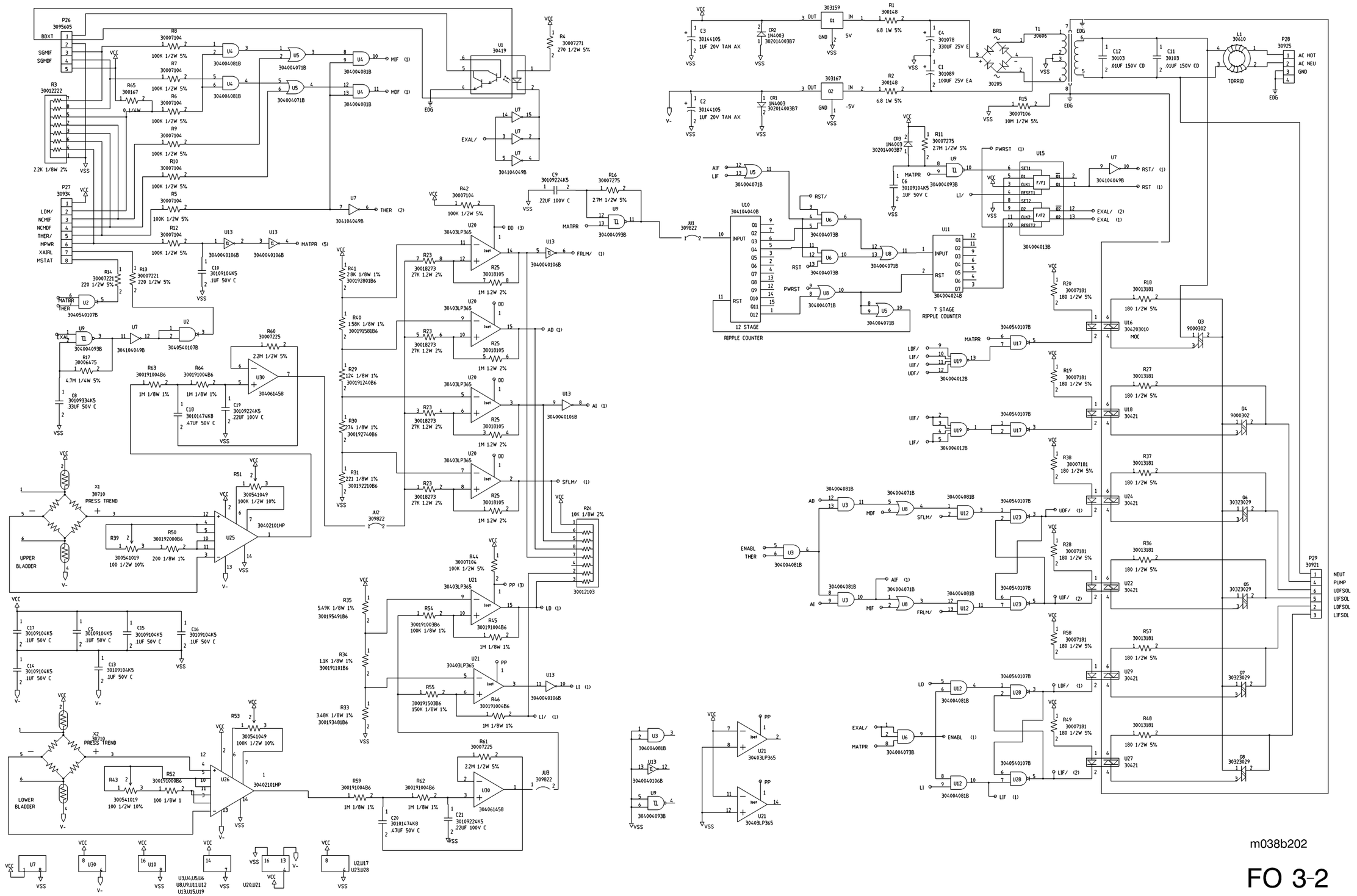

m038b202

Schematic Wiring Diagram—Control Board P/N 45701-01 (P8400 Models Only)

Back to Chapter 3

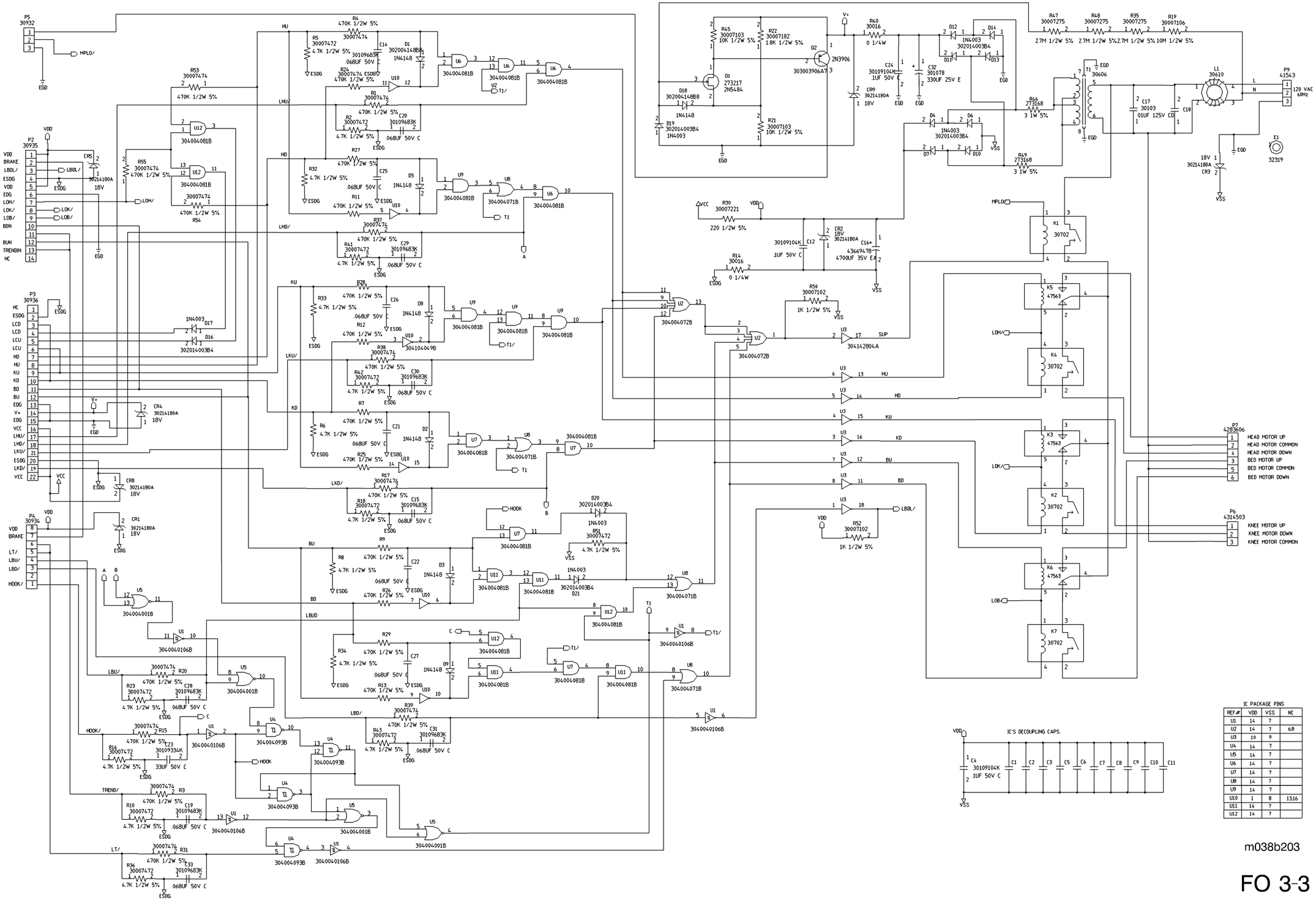

REF.#	VDD	VSS	NC
U1	14	7	
U2	14	7	6,8
U3	10	9	
U4	14	7	
U5	14	7	
U6	14	7	
U7	14	7	
U8	14	7	
U9	14	7	
U10	1	8	13,16
U11	14	7	
U12	14	7	

Schematic Wiring Diagram—Control Board P/N 45789 (P8500 Models Only)

Back to Chapter 3

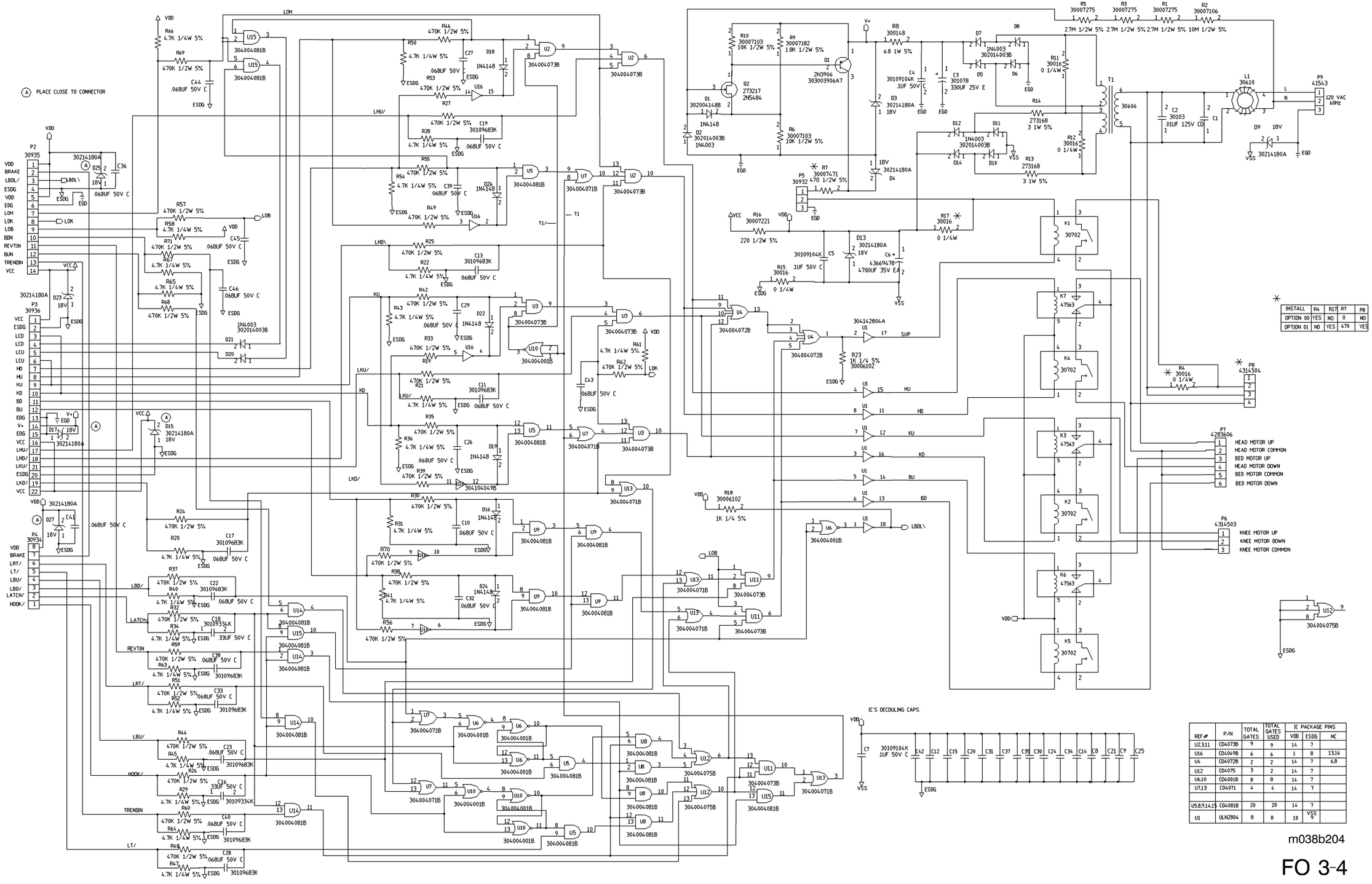

INSTALL	R4	R17	R7	P8
OPTION 00	YES	NO	0	NO
OPTION 01	NO	YES	470	YES

REF #	P/N	TOTAL GATES	TOTAL GATES USED	IC PACKAGE PINS VDD	ESDG	NC
U2,3,11	CD4073B	9	9	14	7	
U16	CD4049B	6	6	1	8	13,16
U4	CD4072B	2	2	14	7	6,8
U12	CD4075	3	2	14	7	
U6,10	CD4001B	8	8	14	7	
U7,13	CD4071	4	4	14	7	
U5,8,9,14,15	CD4081B	20	20	14	7	
U1	ULN2804	8	8	10	VSS 9	

m038b204