GE Healthcare

Technical Publications

Direction 2173225−100

Revision 20

AMX−4+ Service (Model 2169360, 2236420 & 2275938 Series)

Copyright© 1996, 1997, 1999, 2000, 2002 and 2004 By General Electric Co.
All Rights Reserved

THIS PAGE INTENTIONALLY LEFT BLANK.

Languages

ПРЕДУПРЕЖДЕНИЕ (BG)	Това упътване за работа е налично само на английски език. • Ако доставчикът на услугата на клиента изиска друг език, задължение на клиента е да осигури превод. • Не използвайте оборудването, преди да сте се консултирали и разбрали упътването за работа. • Неспазването на това предупреждение може да доведе до нараняване на доставчика на услугата, оператора или пациента в резултат на токов удар, механична или друга опасност.
警告 (ZH-CN)	本维修手册仅提供英文版本。 딇 t 如果客户的维修服务人员需要非英文版本，则客户需自行提供翻译服务。 딇 t 未详细阅读和完全理解本维修手册之前，不得进行维修。 딇 t 忽略本警告可能对维修服务人员、操作人员或患者造成电击、机械伤害或其他形式的伤害。
警告 (ZH-HK)	本服務手冊僅提供英文版本。 딇 t 倘若客戶的服務供應商需要英文以外之服務手冊，客戶有責任提供翻譯服務。 딇 t 除非已參閱本服務手冊及明白其內容，否則切勿嘗試維修設備。 딇 t 不遵從本警告或會令服務供應商、網絡供應商或病人受到觸電、機械性或其他的危險。
警告 (ZH-TW)	本維修手冊僅有英文版。 딇 t 若客戶的維修廠商需要英文版以外的語言，應由客戶自行提供翻譯服務。 딇 t 請勿試圖維修本設備，除非 您已查閱並瞭解本維修手冊。 딇 t 若未留意本警告，可能導致維修廠商、操作員或病患因觸電、機械或其他危險而受傷。
UPOZORENJE (HR)	Ovaj servisni priru?nik dostupan je na engleskom jeziku. • Ako davatelj usluge klijenta treba neki drugi jezik, klijent je dužan osigurati prijevod. • Ne pokušavajte servisirati opremu ako niste u potpunosti pro?itali i razumjeli ovaj servisni priru?nik. • Zanemarite li ovo upozorenje, može do?i do ozljede davatelja usluge, operatera ili pacijenta uslijed strujnog udara, mehani?kih ili drugih rizika.
VÝSTRAHA (CS)	Tento provozní návod existuje pouze v anglickém jazyce. • V případě, že externí služba zákazníkům potřebuje návod v jiném jazyce, je zajištění překladu do odpovídajícího jazyka úkolem zákazníka. • Nesnažte se o údržbu tohoto zařízení, aniž byste si přečetli tento provozní návod a pochopili jeho obsah. • V případě nedodržování této výstrahy může dojít k poranění pracovníka prodejního servisu, obslužného personálu nebo pacientů vlivem elektrického proudu, respektive vlivem mechanických či jiných rizik.

ADVARSEL (DA)	Denne servicemanual findes kun på engelsk. • Hvis en kundes tekniker har brug for et andet sprog end engelsk, er det kundens ansvar at sørge for oversættelse. • Forsøg ikke at servicere udstyret uden at læse og forstå denne servicemanual. • Manglende overholdelse af denne advarsel kan medføre skade på grund af elektrisk stød, mekanisk eller anden fare for teknikeren, operatøren eller patienten.
WAARSCHUWING (NL)	Deze onderhoudshandleiding is enkel in het Engels verkrijgbaar. • Als het onderhoudspersoneel een andere taal vereist, dan is de klant verantwoordelijk voor de vertaling ervan. • Probeer de apparatuur niet te onderhouden alvorens deze onderhoudshandleiding werd geraadpleegd en begrepen is. • Indien deze waarschuwing niet wordt opgevolgd, zou het onderhoudspersoneel, de operator of een patiënt gewond kunnen raken als gevolg van een elektrische schok, mechanische of andere gevaren.
WARNING (EN)	This service manual is available in English only. • If a customer's service provider requires a language other than english, it is the customer's responsibility to provide translation services. • Do not attempt to service the equipment unless this service manual has been consulted and is understood. • Failure to heed this warning may result in injury to the service provider, operator or patient from electric shock, mechanical or other hazards.
HOIATUS (ET)	See teenindusjuhend on saadaval ainult inglise keeles • Kui klienditeeninduse osutaja nõuab juhendit inglise keelest erinevas keeles, vastutab klient tõlketeenuse osutamise eest. • Ärge üritage seadmeid teenindada enne eelnevalt käesoleva teenindusjuhendiga tutvumist ja sellest aru saamist. • Käesoleva hoiatuse eiramine võib põhjustada teenuseosutaja, operaatori või patsiendi vigastamist elektrilöögi, mehaanilise või muu ohu tagajärjel.
VAROITUS (FI)	Tämä huolto-ohje on saatavilla vain englanniksi. • Jos asiakkaan huoltohenkilöstö vaatii muuta kuin englanninkielistä materiaalia, tarvittavan käännöksen hankkiminen on asiakkaan vastuulla. • Älä yritä korjata laitteistoa ennen kuin olet varmasti lukenut ja ymmärtänyt tämän huolto-ohjeen. • Mikäli tätä varoitusta ei noudateta, seurauksena voi olla huoltohenkilöstön, laitteiston käyttäjän tai potilaan vahingoittuminen sähköiskun, mekaanisen vian tai muun vaaratilanteen vuoksi.
ATTENTION (FR)	Ce manuel d'installation et de maintenance est disponible uniquement en anglais. • Si le technicien d'un client a besoin de ce manuel dans une langue autre que l'anglais, il incombe au client de le faire traduire. • Ne pas tenter d'intervenir sur les équipements tant que ce manuel d'installation et de maintenance n'a pas été consulté et compris. • Le non-respect de cet avertissement peut entraîner chez le technicien, l'opérateur ou le patient des blessures dues à des dangers électriques, mécaniques ou autres.

WARNUNG (DE)	Diese Serviceanleitung existiert nur in englischer Sprache. • Falls ein fremder Kundendienst eine andere Sprache benötigt, ist es Aufgabe des Kunden für eine entsprechende Übersetzung zu sorgen. • Versuchen Sie nicht diese Anlage zu warten, ohne diese Serviceanleitung gelesen und verstanden zu haben. • Wird diese Warnung nicht beachtet, so kann es zu Verletzungen des Kundendiensttechnikers, des Bedieners oder des Patienten durch Stromschläge, mechanische oder sonstige Gefahren kommen.
ΠΡΟΕΙΔΟΠΟΙΗΣΗ (EL)	Το παρόν εγχειρίδιο σέρβις διατίθεται μόνο στα αγγλικά. • Εάν ο τεχνικός σέρβις ενός πελάτη απαιτεί το παρόν εγχειρίδιο σε γλώσσα εκτός των αγγλικών, αποτελεί ευθύνη του πελάτη να παρέχει τις υπηρεσίες μετάφρασης. • Μην επιχειρήσετε την εκτέλεση εργασιών σέρβις στον εξοπλισμό αν δεν έχετε συμβουλευτεί και κατανοήσει το παρόν εγχειρίδιο σέρβις. • Αν δεν προσέξετε την προειδοποίηση αυτή, ενδέχεται να προκληθεί τραυματισμός στον τεχνικό σέρβις, στο χειριστή ή στον ασθενή από ηλεκτροπληξία, μηχανικούς ή άλλους κινδύνους.
FIGYELMEZTETÉS (HU)	Ezen karbantartási kézikönyv kizárólag angol nyelven érhető el. • Ha a vevő szolgáltatója angoltól eltérő nyelvre tart igényt, akkor a vevő felelőssége a fordítás elkészíttetése. • Ne próbálja elkezdeni használni a berendezést, amíg a karbantartási kézikönyvben leírtakat nem értelmezték. • Ezen figyelmeztetés figyelmen kívül hagyása a szolgáltató, működtető vagy a beteg áramütés, mechanikai vagy egyéb veszélyhelyzet miatti sérülését eredményezheti.
AÐVÖRUN (IS)	Þessi þjónustuhandbók er aðeins fáanleg á ensku. • Ef að þjónustuveitandi viðskiptamanns þarfnast annas tungumáls en ensku, er það skylda viðskiptamanns að skaffa tungumálaþjónustu. • Reynið ekki að afgreiða tækið nema að þessi þjónustuhandbók hefur verið skoðuð og skilin. • Brot á sinna þessari aðvörun getur leitt til meiðsla á þjónustuveitanda, stjórnanda eða sjúklings frá raflosti, vélrænu eða öðrum áhættum.
AVVERTENZA (IT)	Il presente manuale di manutenzione è disponibile soltanto in lingua inglese. • Se un addetto alla manutenzione richiede il manuale in una lingua diversa, il cliente è tenuto a provvedere direttamente alla traduzione. • Procedere alla manutenzione dell'apparecchiatura solo dopo aver consultato il presente manuale ed averne compreso il contenuto. • Il mancato rispetto della presente avvertenza potrebbe causare lesioni all'addetto alla manutenzione, all'operatore o ai pazienti provocate da scosse elettriche, urti meccanici o altri rischi.
警告 (JA)	このサービスマニュアルには英語版しかありません。 ・ サービスを担当される業者が英語以外の言語を要求される場合、翻訳作業はその業者の責任で行うものとさせていただきます。 ・ このサービスマニュアルを熟読し理解せずに、装置のサービスを行わないでください。 ・ この警告に従わない場合、サービスを担当される方、操作員あるいは患者さんが、感電や機械的又はその他の危険により負傷する可能性があります。

경고 (KO)	본 서비스 매뉴얼은 영어로만 이용하실 수 있습니다 . • 고객의 서비스 제공자가 영어 이외의 언어를 요구할 경우 , 번역 서비스를 제공하는 것은 고객의 책임입니다 . • 본 서비스 매뉴얼을 참조하여 숙지하지 않은 이상 해당 장비를 수리하려고 시도하지 마십시오 . 본 경고 사항에 유의하지 않으면 전기 쇼크 , 기계적 위험 , 또는 기타 위험으로 인해 서비스 제공자 , 사용자 또는 환자에게 부상을 입힐 수 있습니다 .
BRDINJUMS (LV)	Šī apkopes rokasgrāmata ir pieejama tikai angļu valodā. • Ja klienta apkopes sniedzējam nepieciešama informācija citā valodā, klienta pienākums ir nodrošināt tulkojumu. • Neveiciet aprīkojuma apkopi bez apkopes rokasgrāmatas izlasīšanas un saprašanas. • Šī brīdinājuma neievērošanas rezultātā var rasties elektriskās strāvas trieciena, mehānisku vai citu faktoru izraisītu traumu risks apkopes sniedzējam, operatoram vai pacientam.
ĮSPĖJIMAS (LT)	Šis eksploatavimo vadovas yra tik anglų kalba. • Jei kliento paslaugų tiekėjas reikalauja vadovo kita kalba – ne anglų, suteikti vertimo paslaugas privalo klientas. • Nemėginkite atlikti įrangos techninės priežiūros, jei neperskaitėte ar nesupratote šio eksploatavimo vadovo. • Jei nepaisysite šio įspėjimo, galimi paslaugų tiekėjo, operatoriaus ar paciento sužalojimai dėl elektros šoko, mechaninių ar kitų pavojų.
ADVARSEL (NO)	Denne servicehåndboken finnes bare på engelsk. • Hvis kundens serviceleverandør har bruk for et annet språk, er det kundens ansvar å sørge for oversettelse. • Ikke forsøk å reparere utstyret uten at denne servicehåndboken er lest og forstått. • Manglende hensyn til denne advarselen kan føre til at serviceleverandøren, operatøren eller pasienten skades på grunn av elektrisk støt, mekaniske eller andre farer.
OSTRZEŻENIE (PL)	Niniejszy podręcznik serwisowy dostępny jest jedynie w języku angielskim. • Jeśli serwisant klienta wymaga języka innego niż angielski, zapewnienie usługi tłumaczenia jest obowiązkiem klienta. • Nie próbować serwisować urządzenia bez zapoznania się z niniejszym podręcznikiem serwisowym i zrozumienia go. • Niezastosowanie się do tego ostrzeżenia może doprowadzić do obrażeń serwisanta, operatora lub pacjenta w wyniku porażenia prądem elektrycznym, zagrożenia mechanicznego bądź innego.
ATENÇÃO (PT-BR	Este manual de assistência técnica encontra-se disponível unicamente em inglês. • Se outro serviço de assistência técnica solicitar a tradução deste manual, caberá ao cliente fornecer os serviços de tradução. • Não tente reparar o equipamento sem ter consultado e compreendido este manual de assistência técnica. • A não observância deste aviso pode ocasionar ferimentos no técnico, operador ou paciente decorrentes de choques elétricos, mecânicos ou outros.

ATENÇÃO (PT-PT)	Este manual de assistência técnica só se encontra disponível em inglês. • Se qualquer outro serviço de assistência técnica solicitar este manual noutro idioma, é da responsabilidade do cliente fornecer os serviços de tradução. • Não tente reparar o equipamento sem ter consultado e compreendido este manual de assistência técnica. • O não cumprimento deste aviso pode colocar em perigo a segurança do técnico, do operador ou do paciente devido a choques eléctricos, mecânicos ou outros.
ATENȚIE (RO)	Acest manual de service este disponibil doar în limba engleză. • Dacă un furnizor de servicii pentru clienți necesită o altă limbă decât cea engleză, este de datoria clientului să furnizeze o traducere. • Nu încercați să reparați echipamentul decât ulterior consultării şi înțelegerii acestui manual de service. • Ignorarea acestui avertisment ar putea duce la rănirea depanatorului, operatorului sau pacientului în urma pericolelor de electrocutare, mecanice sau de altă natură.
ОСТОРОЖНО! (RU)	Данное руководство по техническому обслуживанию представлено только на английском языке. • Если сервисному персоналу клиента необходимо руководство не на английском, а на каком-то другом языке, клиенту следует самостоятельно обеспечить перевод. • Перед техническим обслуживанием оборудования обязательно обратитесь к данному руководству и поймите изложенные в нем сведения. • Несоблюдение требований данного предупреждения может привести к тому, что специалист по техобслуживанию, оператор или пациент получит удар электрическим током, механическую травму или другое повреждение.
UPOZORENJE (SR)	Ovo servisno uputstvo je dostupno samo na engleskom jeziku. • Ako klijentov serviser zahteva neki drugi jezik, klijent je du?an da obezbedi prevodila?ke usluge. • Ne poku?avajte da opravite ure?aj ako niste pro?itali i razumeli ovo servisno uputstvo. • Zanemarivanje ovog upozorenja mo?e dovesti do povre?ivanja servisera, rukovaoca ili pacijenta usled strujnog udara ili mehani?kih i drugih opasnosti.
UPOZORNENIE (SK)	Tento návod na obsluhu je k dispozícii len v angličtine. • Ak zákazníkov poskytovateľ služieb vyžaduje iný jazyk ako angličtinu, poskytnutie prekladateľských služieb je zodpovednos″ou zákazníka. • Nepokúšajte sa o obsluhu zariadenia, kým si neprečítate návod na obluhu a neporozumiete mu. • Zanedbanie tohto upozornenia môže spôsobi″ zranenie poskytovateľa služieb, obsluhujúcej osoby alebo pacienta elektrickým prúdom, mechanické alebo iné ohrozenie.

ATENCION (ES)	Este manual de servicio sólo existe en inglés. • Si el encargado de mantenimiento de un cliente necesita un idioma que no sea el inglés, el cliente deberá encargarse de la traducción del manual. • No se deberá dar servicio técnico al equipo, sin haber consultado y comprendido este manual de servicio. • La no observancia del presente aviso puede dar lugar a que el proveedor de servicios, el operador o el paciente sufran lesiones provocadas por causas eléctricas, mecánicas o de otra naturaleza.
VARNING (SV)	Den här servicehandboken finns bara tillgänglig på engelska. . • Om en kunds servicetekniker har behov av ett annat språk än engelska, ansvarar kunden för att tillhandahålla översättningstjänster. • Försök inte utföra service på utrustningen om du inte har läst och förstår den här servicehandboken. • Om du inte tar hänsyn till den här varningen kan det resultera i skador på serviceteknikern, operatören eller patienten till följd av elektriska stötar, mekaniska faror eller andra faror.
DIKKAT (TR)	Bu servis kılavuzunun sadece ingilizcesi mevcuttur. • Eğer müşteri teknisyeni bu kılavuzu ingilizce dışında bir başka lisandan talep ederse, bunu tercüme ettirmek müşteriye düşer. • Servis kılavuzunu okuyup anlamadan ekipmanlara müdahale etmeyiniz. • Bu uyarıya uyulmaması, elektrik, mekanik veya diğer tehlikelerden dolayı teknisyen, operatör veya hastanın yaralanmasına yol açabilir.

IMPORTANT! . . . X-RAY PROTECTION

X-ray equipment if not properly used may cause injury. Accordingly, the instructions herein contained should be thoroughly read and understood by everyone who will use the equipment before you attempt to place this equipment in operation. The General Electric Company, Medical Systems Group, will be glad to assist and cooperate in placing this equipment in use.

Although this apparatus incorporates a high degree of protection against x-radiation other than the useful beam, no practical design of equipment can provide complete protection. Nor can any practical design compel the operator to take adequate precautions to prevent the possibility of any persons carelessly exposing themselves or others to radiation.

It is important that everyone having anything to do with x-radiation be properly trained and fully acquainted with the recommendations of the National Council on Radiation Protection and Measurements as published in NCRP Reports available from NCRP Publications, 7910 Woodmont Avenue, Room 1016, Bethesda, Maryland 20814, and of the International Commission on Radiation Protection, and take adequate steps to protect against injury.

The equipment is sold with the understanding that the General Electric Company, GE Healthcare Group, its agents, and representatives have no responsibility for injury or damage which may result from improper use of the equipment.

Various protective material and devices are available. It is urged that such materials or devices be used.

CERTIFIED ELECTRICAL CONTRACTOR STATEMENT

All electrical installations that are preliminary to positioning of the equipment at the site prepared for the equipment shall be performed by licensed electrical contractors. In addition, electrical feeds into the Power Distribution Unit shall be performed by licensed electrical contractors. Other connections between pieces of electrical equipment, calibrations, and testing shall be performed by qualified GE Healthcare personnel. The products involved (and the accompanying electrical installations) are highly sophisticated, and special engineering competence is required. In performing all electrical work on these products, GE will use its own specially trained field engineers. All of GE's electrical work on these products will comply with the requirements of the applicable electrical codes.

The purchaser of GE equipment shall only utilize qualified personnel (i.e., GE's field engineers, personnel of third-party service companies with equivalent training, or licensed electricians) to perform electrical servicing on the equipment.

DAMAGE IN TRANSPORTATION

DAMAGE IN TRANSPORTATION

All packages should be closely examined at time of delivery. If damage is apparent, have notation "Damage in Shipment" written on all copies of the freight or express bill before delivery is accepted or "signed for" by a General Electric representative or a hospital receiving agent. Whether noted or concealed, damage MUST be reported to the carrier immediately upon discovery, or in any event, within 14 days after receipt, and the contents and containers held for inspection by the carrier. A transportation company will not pay a claim for damage if an inspection is not requested within this 14−day period.

To file a report:

- Call 1−800−548−3366 and use option 8.
- Fill out a report on http://egems.med.ge.com/edq/home.jsp
- Contact your local service coordinator for more information on this process.

Rev. June 13, 2006

LITHIUM BATTERY CAUTIONARY STATEMENTS

⚠ CAUTION

Danger of explosion if battery is incorrectly replaced. Replace only with the same or equivalent type recommended by the manufacturer. Discard used batteries according to the manufacturer's instructions.

⚠ CAUTION

Il y a danger d'explosion s'il y a replacement incorrect de la batterie. Remplacer uniquement avec une batterie du même type ou d'un type recommandé par le constructeur. Mettre au rébut les batteries usagées conformément aux instructions du fab

TECHNICAL MANUAL UPDATES

When operating or servicing GE Healthcare products, please contact your GE representative for the latest revision of product documentation. Product documentation may also be available on−line at the GE Healthcare support documentation library.

REVISION HISTORY

REV	DATE	REASON FOR CHANGE
A	Nov. 6 1996	Initial Draft.
0	Dec. 13, 1996	Initial release.
1	Mar. 7, 1997	Made cable drape illustration changes, brake relay illustration changes; updated battery installation illustrration.
2	June 24, 1997	Modified vertical arm latch switch to new style, added latch wiring diagram in Section 9.
3	Aug. 14, 1997	High Impact Inspection.
4	Apr. 12, 1999	Added AMX−4+ Model 2236420 Series.
5	Nov. 8, 2000	Added AMX−4+ Model 2275938 Series.
6	Sept. 10, 2002	Added NOTE to section 4−2 about Loctite and cleaning screw holes.
7	Oct. 21, 2004	Added model 46−270615P3 collimator information to replacement procedures.
8	May 14, 2007	Added text “or equivalent service tool“ to certain service tool references.
9	Feb. 14, 2008	Added Sections in Chapter 5 on installation of warning labels.
10	Mar. 25, 2008	Updated Section 6−6 “Install Batteries”.
11	June 23, 2008	Added battery cable leads note above Section 6−1. Resolves PQR 13148025.
12	21NOV2008	Added note in Section 2.2, following step 1−iii, about ordering filtration cup.
13	05OCT2009	Updated collimator PM procedures to make use of torque tool kit. Resolves iTrak Reports 13085327 and 13155649.
14	04DEC2009	Added LOTO procedure as Section 1.
15	01JUN2010	Added Collimator Tool Kit (5340328) to the Tools and Materials list on page 2. Reference GEHC Am Service CAPA #5.
16	20OCT2010	Changed label kit part number from 5268993 to 5407496 in Section 6−6. Updated Section 6−9 − Top Cover X−ray Warning Label; changed label kit part number from 5268993 to 5407496 in step 1, added step 3 and related illustration to install Canadian X−ray warning label. To comply with Canadian RED Act.
17	13OCT2011	Updated Sections 5−3−1, 5−3−2, 5−3−6, 5−4−7 and 5−6−2 to include steps to apply Loctite 242 to fastener threads. Refer to TrackWise #4071941.
18	14DEC2011	Added Section 12 regarding safety contactor replacement. Refer to CAPA 3519016.
19	04MAY2012	Updated Sections 5−3, 5−3−1, 5−3−2, 5−3−3 and 5−3−4 to modify counterweight and safety replacement/adjustment procedures. Refer to CAPA 4798150.
20	04SEP2012	Added new Section 12 − Hand Switch Cleaning & Disinfecting Instructions. Added new Section 13 − Periodic Maintenance Procedure for Hand Switch. Refer to CAPA 5970812. Added text to front material on how to obtain most recent revisions of technical manuals. Satisfies FDA recommendation.

LIST OF EFFECTIVE PAGES

PAGE NUMBER	REVISION NUMBER	PAGE NUMBER	REVISION NUMBER	PAGE NUMBER	REVISION NUMBER
All	20				

TABLE OF CONTENTS

SECTION 1 − LOCK−OUT TAG−OUT (LOTO) 5

SECTION 2 − SERVICING THE COLLIMATOR 6
2-1 Collimator Removal 6
2-2 Collimator Interface and Port Plates Check 7
2-3 Collimator Installation 9
2-4 Tape Measure Replacement 9
2-5 Field Lamp Replacement 10
2-6 Light Field Adjustment 10
2-6-1 Adjustment Method 1 11
2-6-2 Adjustment Method 2 13
2-7 Crosshair Window Adjustment 15
2-8 Field Light Switch Replacement 15
2-9 Field Size Pointer Replacement 15
2-10 Front Panel Replacement (Medys collimator) 16
2-11 Brake Switch Replacement 17

SECTION 3 − SERVICING THE X−RAY TUBE 19
3-1 X−Ray Tube Removal 19
3-2 X−Ray Tube Installation 20

SECTION 4 − SERVICING THE HORIZONTAL ARM 22
4-1 Yoke Assembly Removal 22
4-2 Yoke Assembly Installation 23
4-3 Yoke Mounting Plate Assembly Removal 23
4-4 Yoke Mounting Plate Assembly Installation 25
4-5 Horizontal Arm Assembly Removal 26
4-6 Horizontal Arm Assembly Installation 27
4-7 Horizontal Arm Brake and Cable Assembly Removal 28
4-8 Horizontal Arm Brake and Cable Assembly Installation 28
4-9 Horizontal Arm Brake Cable Removal 30
4-10 Horizontal Arm Brake Cable Installation 30
4-11 Horizontal Arm Brake Removal 31
4-12 Horizontal Arm Brake Installation 31

SECTION 5 − SERVICING THE VERTICAL COLUMN 32
5-1 Remove Vertical Column Assembly 32
5-2 Install Vertical Column Assembly 33
5-3 Counterweight Cables 34
5-3-1 Main Cable 35
5-3-2 Safety Cable 37
5-3-3 Reassemble Unit 37
5-3-4 Vertical Column Cable Tension 37
5-3-5 Remove Follower Cable 38
5-3-6 Install Follower Cable 40
5-4 Upper Brake, Pulley, and Bearings 40
5-4-1 Disconnect Brake 40
5-4-2 Remove Upper Pulley and Brake 40
5-4-3 Replace Upper Pulley and Bearings 41
5-4-4 Install Upper Pulley, Bearings and Brake 42
5-4-5 Connect Brake 43

TABLE OF CONTENTS

5-4-6 Remove Upper Pulley, Bearings and Brake (Alternate) 43
5-4-7 Install Upper Pulley, Bearings and Brake (Alternate) 43
5-5 Counterweight 44
5-5-1 Remove Counterweight 44
5-5-2 Install Counterweight 45
5-5-3 Counterweight Balancing 45
5-6 Carriage Assembly 46
5-6-1 Remove Carriage 46
5-6-2 Install Carriage 46
5-6-3 Remove Carriage Bearings 47
5-6-4 Install Carriage Bearings 47
5-7 Lower Brake Removal 48
5-8 Lower Bearings and Baseplate Removal 48
5-9 Lower Brake and Bearings Installation 49
5-10 Column Base Removal 49
5-11 Column Base Installation 50
5-12 Lower Pulley and Bearings Removal 50
5-13 Lower Pulley and Bearings Installation 50
5-14 Column Support Assembly Removal 51
5-15 Column Support Assembly Installation 51

SECTION 6 − SERVICING THE CASSETTE DRAWER, COVERS, HORIZONTAL ARM LATCH AND HANDSWITCH 52
6-1 Cassette Drawer Removal 52
6-2 Cassette Drawer Installation 52
6-3 Cassette Drawer IEC Finger Pinch Label Installation 52
6-4 Side Covers Removal 53
6-5 Side Cover Installation 53
6-6 Battery Charging Warning Label 54
6-7 Top Cover Removal 54
6-8 Top Cover Installation 55
6-9 Top Cover X−ray Warning Label 56
6-10 Remove Latch Assembly and Components (Hall Effect Switch) 56
6-11 Install Latch Assembly and Components (Hall Effect Switch) 58
6-12 Remove And Install Hand Switch Cable 59
6-13 Install Hand Switch 59

SECTION 7 − SERVICING THE BATTERIES 61
7-1 Remove Battery Cover 61
7-2 Disconnect Battery Sense Harness (If Required) 62
7-3 Disconnect and Remove Batteries 62
7-4 Disconnect and Remove Battery Test Terminal Strip 65
7-5 Continue Battery Disconnection/Removal 65
7-6 Install Panasonic Batteries with Sense Board 2334738−2 65

SECTION 8 − SERVICING THE BASE ASSEMBLY 76
8-1 Front Bumper 76
8-1-1 Remove Pads 76
8-1-2 Install Pads 77
8-1-3 Bumper Switch Removal 77
8-1-4 Bumper Switch Installation 77
8-1-5 Bumper Bearings Removal 78

TABLE OF CONTENTS

8-1-6 Bumper Bearings Installation 78
8-2 Raise Unit for Service 79
8-2-1 Raise Rear Wheels 79
8-2-2 Lower Rear Wheels 79
8-2-3 Raise Front Wheels 80
8-2-4 Lower Front Wheels 81
8-3 Remove Drive Wheels 81
8-4 Install Drive Wheels 82
8-5 Remove Motor and Brake 83
8-6 Install Motor and Brake 84
8-7 Remove Caster Wheel 85
8-8 Install Caster Wheel 85

SECTION 9 − SERVICING THE DRIVE HANDLE ASSEMBLY 86
9-1 Handle Sensor Removal 86
9-2 Handle Sensor Installation 87
9-3 Handle Drive Enable Switch Removal 88
9-4 Handle Drive Enable Switch Installation 88

SECTION 10 − SERVICING THE HIGH VOLTAGE TRANSFORMER 90
10-1 High Voltage Transformer Removal 90
10-2 High Voltage Transformer Installation 91

SECTION 11 − SERVICING THE POWER CORD, REEL ASSEMBLY, CABLE ROUTING 92
11-1 Cord/Cord Reel Removal 92
11-1-1 Cord Reel Removal (Domestic Models) 92
11-1-2 Cord Reel Removal (IEC Models) 92
11-2 Cord/Cord Reel Installation 93
11-2-1 Cord Reel Installation (Domestic Models) 93
11-2-2 Cord Reel Installation (IEC Models) 93
11-3 Horizontal Arm and Vertical Column Cable Routing 93
11-3-1 Cathode Cable 94
11-3-2 Anode Cable 96
11-3-3 Collimator Cable 97
11-3-4 Stator Cable 101
11-3-5 Horizontal Arm Brake Cable 102
11-3-6 Control Cable 102
11-3-7 Vertical Column Brake Cable 103

SECTION 12 − HAND SWITCH CLEANING & DISINFECTING INSTRUCTIONS 104

SECTION 13 − PERIODIC MAINTENANCE PROCEDURE FOR HAND SWITCH 104

SECTION 14 − SERVICING SAFETY CONTACTOR ON THE X−RAY CONTROL MODULE 105

THIS PAGE INTENTIONALLY LEFT BLANK.

AMX−4+ SERVICE

Indentification

See Illustration 1. The AMX−4+ is identified by Model Number on the rating plate located on the top cover. Model part and catalog numbers are identified in Table 1. This direction contains instructions for performing mechanical maintenance on these Units.

TABLE 1
AMX−4+ MODELS

Description	Part number	catalog number	Part number	catalog number
domestic	2169360−7	a0659f	2236420−7 & 2275938−7	A0659JF
domestic, aec	2169360−8	a0659fa	2236420−8 & 2275938−8	A0659JG
domestic, tech switch	2169360−9	a0659fc	2236420−9 & 2275938−9	A0659JH
domestic, aec, tech switch	2169360−10	a0659fb	2236420−10 & 2275938−10	A0659JJ
iec, emc	2169360	a0659a	2236420 & 2275938	A0659J
iec, emc, aec	2169360−2	a0659aa	2236420−2 & 2275938−2	A0659JA
iec, emc, tech switch	2169360−3	a0659ab	2236420−3 & 2275938−3	A0659JB
iec, emc, aec, tech switch	2169360−4	a0659ac	2236420−4 & 2275938−4	A0659JC
japan	2169360−5	a0659c	2236420−5 & 2275938−5	A0659JD
japan short column	2169360−6	a0659d	2236420−6 & 2275938−6	A0659JE

ILLUSTRATION 1
AMX−4+ IDENTIFICATION

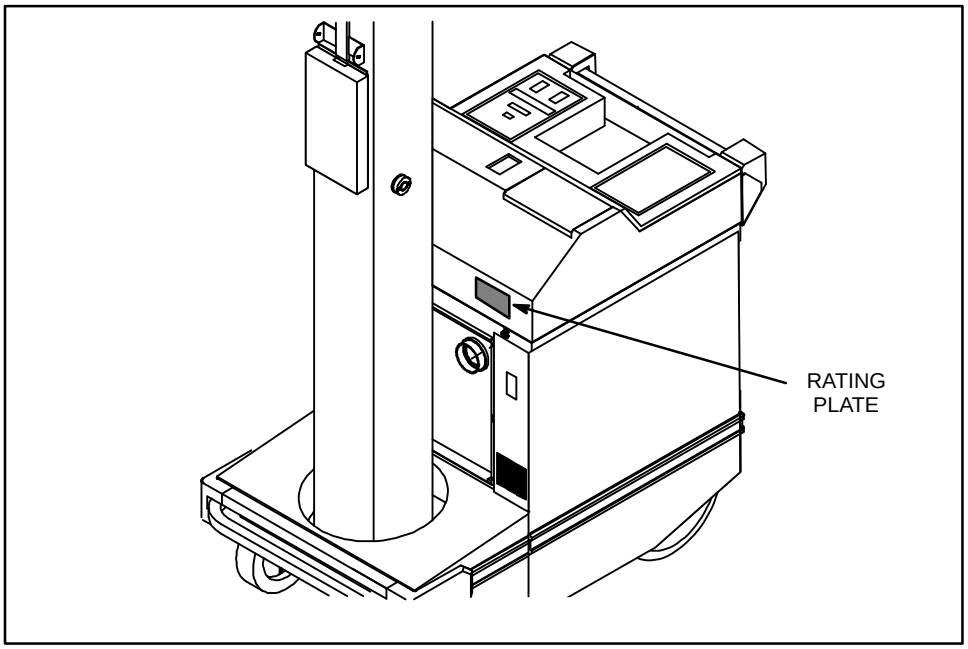

The instructions cover the removal, installation, and adjustment of the field serviceable assemblies and parts comprising the unit. Illustrations are provided as a supplement to the procedures to assist the service technician in understanding the relationship of the parts involved.

Definition of Terms

The front end of the unit is defined as the end containing the vertical column and bumper assembly. Left and right sides are determined by standing at the rear (handle end) of the unit, facing the unit.

Tools and Materials

A list of tools required to perform the service adjustment procedures is given below. With the exception of the vertical column lifting tool and floor jack, the tools listed are part of the standard complement of tools supplied in the service technician's tool kit.

Tools

- Vertical column lifting tool (46−303362P1)
- AMX−4 Series Lifting Jack (46−302966P1)
- Counterweight Lifting Tool (46−303491G1)
- Collimator Tool Kit (5340328)
- HHS Field Test Kit (46−177372G1)
- Torque Wrench 2−36 pound−inches/0.23 4.1 Newton−meters (46−282782P1)
- Torque Wrench Kit (46−268445G1)
- H/V Cable Spanner Wrench (507A935G1)

Materials

- Loctite sealant type 242 (46−170686P2 10 cc bottle) and 290 (46−170687P2 50cc bottle)
- Bearing grease − Lithium (Fiske 630−A−A) or equal
- Silicone insulating compound (46−125224P3 3 oz. tube)
- Diala AX Dielectric Insulating Oil (T0552G 1 gallon)
- Electrical tape
- Cotton rags
- Cotton swabs

Periodic Inspection

Periodic inspection instructions for various assemblies of the AMX−4+ are listed in the maintenance schedule given in Direction 2173227−100, *AMX−4+ Periodic Maintenance*. All deficiencies uncovered during inspection should be corrected before further use of the equipment.

Removal and Installation Procedure Index

A list of AMX−4+ assemblies for which removal and installation procedures are provided in the following index. The index lists the section in which the procedure is presented, the name of the assembly, and the number of the paragraph that contains the removal or installation procedure.

SECTION TITLE	ASSEMBLY NAME	REMOVAL PARAGRAPH	INSTALLATION PARAGRAPH
Section 2 Servicing the Collimator Assembly	Collimator Assembly	2−1	2−2
Section 3 Servicing the X−ray Tube Assembly	X−Ray Tube Assembly	3−1	3−2
Section 4 Servicing the Horizontal Arm Assembly	Yoke Assembly	4−1	4−2
	Yoke Mounting Plate Assembly	4−3	4−4
	Horizontal Arm Assembly	4−5	4−6
	Brake − Cable Assembly	4−7	4−8
	Cable Assembly	4−9	4−10
	Brake Assembly	4−11	4−12
Section 5 Servicing the Vertical Column Assembly	Vertical Column	5−1	5−2
	Cables	5−3	5−4
	Upper Pulley and Brake Assembly	5−5	5−6
	Counterweights	5−7	5−8
	Upper Brake Assembly	5−9	5−10
	Upper Pulley and Bearings	5−11	5−12
	Carriage Assembly	5−13	5−14
	Carriage Bearings	5−15	5−16
	Lower Brake and Bearings	5−17	5−18
	Column Base	5−19	5−20
	Lower Pulley and Bearings	5−21	5−22
	Column Support	5−23	5−24
Section 6 Servicing the Trim Covers	Cassette Drawer	6−1	6−2
	Side Covers	6−3	6−4
	Top Cover	6−5	6−6
Section 7 Servicing the Base Assembly	Gates Battery	7−1	7−2
	Bumper Assembly	7−3	7−4
	Bumper Switch	7−5	7−6
	Bumper Bearings	7−7	7−8
	Motor and Brake	7−9	7−10
	Drive Wheel	7−11	7−12
	Caster Wheel	7−13	7−14
Section 8 Servicing the Handle Assembly	Sensor Assembly	8−1	8−2
	Drive Enable Switch	8−3	8−4
Section 9 Servicing the High Voltage Transformer	Transformer	9−1	9−2
Section 10 Servicing the Latch Assembly and Cable Routing	Latch Assembly (Hall Effect Switch)	10−1	10−2
	Cord/Cord Reel	10−3	10−4
	Cord Reel	10−5−2	10−5
	Cable Routing		10−5−1
	Cathode Cable		10−5−2
	Anode Cable		10−5−3
	Collimator Cable		10−5−4
	Stator Cable		10−5−5
	Horizontal Arm Brake Cable		10−5−6
	Control Cable		10−5−7
	Vertical Column Brake Cable		

THIS PAGE INTENTIONALLY LEFT BLANK.

SECTION 1 − LOCK−OUT TAG−OUT (LOTO)

LOTO Procedure for “Electrical” Power

Name of Equipment: AMX −4+	
Step	**Lockout/Tagout Procedure**
1	Prepare for shutdown of equipment by making sure you know where the system circuit breaker and AC power plug is located, and have: − A pair of safety glasses − Voltage meter − Approved AC power plug locking device − Multiple locking device if more than one lock is to be applied, and enough personal LOTO locks and tags for everyone in the group.
2	Notify affected personnel working in the area that lockout/tagout is being performed.
3	Shut down the AMX−4+ system by turning the keyswitch to **OFF**.
4	Place the system main circuit breaker to the **OFF** position.
5	Locate an approved AC power plug locking device and place on the AC power plug.
6	Attach personal LOTO lock and tag to the AC Power Plug locking device.
7	Wait 3 minutes for discharge of capacitors.
8	Remove the left side of the cover.
9	Locate the Main Chassis Ground Lug or Lugs (some models have two lugs) on the lower left side just above the battery compartment access panel. Remove all wires connected to the ground lugs and individually tape each one to ensure each cannot make contact with any other lug or any other item or device.
10	Make sure the system will not turn on by turning the keyswitch **ON** in the upper left corner on the console and looking for lights on the right side of the console. Turn the keyswitch to **OFF** after verifying the system does not power up.
11	Make sure the voltage meter is working properly by testing it on a known live voltage (like a wall outlet).
12	Verify electrical power has been removed by using a voltmeter and testing for voltage between the main circuit breaker switch upper power connection and the main chassis ground lug located on the lower left side just above the battery compartment access panel.
13	Service/repair system.
14	Notify affected personnel that LOTO devices are being removed and equipment will be re−energized.
15	Verify the area is safe to re−energize the equipment.
16	Ensure any safety guards or devices have been reinstalled.
17	Return system functions to their normal **OFF** state.
18	Locate the Main Chassis Ground Lug or Lugs (some models have two lugs) on the lower left side just above the battery compartment access panel. Remove tape and reconnect to the chassis ground lugs.
19	Remove personal LOTO lock and tag.
20	Communicate to everyone in the area that the system is about to be re−energized.
21	Place the main system circuit breaker to the **ON** position.
22	Turn on the system by turning the key switch in the upper left corner on the console to the **ON** position and test it for proper operation.

SECTION 2 − SERVICING THE COLLIMATOR

This section provides procedures covering the removal and installation of the collimator. It also provides procedures for replacing and aligning the field lamp, aligning the crosshairs, and replacing the brake and field lamp switches.

2-1 Collimator Removal

1. Close collimator blades.
2. Rotate X−ray tube and collimator assembly so collimator crosshair window is facing upward.
3. Place the horizontal arm assembly in park position on top cover of unit.

⚠ CAUTION

Potential for sudden and unexpected arm motion: Secure the horizontal arm before removing components from the arm. Removing weight allows the counterweight to descend rapidly and the arm to ascend rapidly possibly causing damage to the unit and personal injury. Use Counterweight Lift Tool 46−303491G1 or equivalent service tool.

4. Shut off power by turning the main circuit breaker to the OFF position.
5. Remove two screws in bottom of terminal box located on back of vertical column and lift off cover. See Illustration 2−1.
6. Disconnect collimator cable leads from terminal block. Record and tag leads.
7. Remove Heyco bushing and cable through bottom of terminal box.

ILLUSTRATION 2−1
TERMINAL BOX AND COLLIMATOR CABLE ROUTING

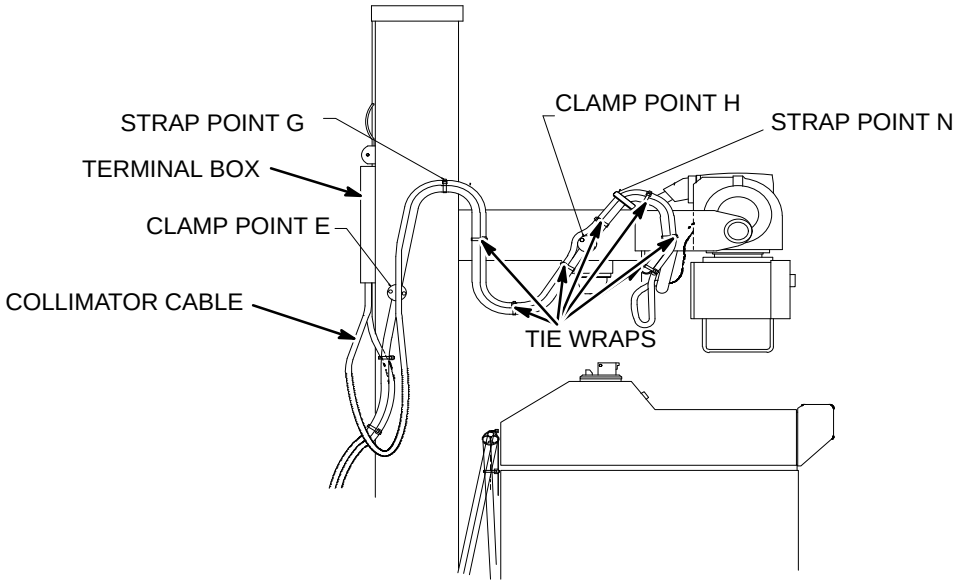

8. Cut ty−raps securing collimator cable to cathode cable and remove from Strap Points G and N, and Clamp Points E and H.
9. Remove three 10−24 × 0.75 hex socket head cap screws securing collimator assembly to X−ray tube. See Illustration 2−2.
10. Remove collimator from interface plate.

ILLUSTRATION 2−2
COLLIMATOR

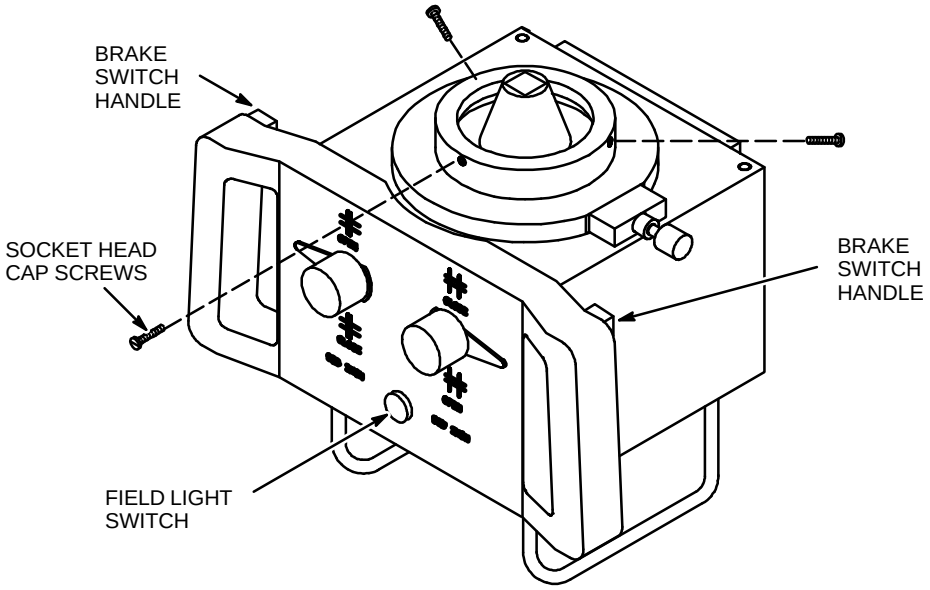

2-2 Collimator Interface and Port Plates Check

Note: The collimator interface plate for every new and reloaded tube from the GE Reload Facility is factory aligned and should not be disturbed. If plate alignment is altered, the plate will have to be re−aligned in the field.

1. Close collimator blades.
2. Rotate X−ray tube and collimator assembly so collimator crosshair window is facing upward.
3. Place the horizontal arm assembly in park position on top cover of unit.

⚠ CAUTION

Potential for sudden and unexpected arm motion: Secure the horizontal arm before removing components from the arm. Removing weight allows the counterweight to descend rapidly and the arm to ascend rapidly possibly causing damage to the unit and personal injury. Use Counterweight Lift Tool 46−303491G1 or equivalent service tool.

4. Shut off power by turning the main circuit breaker to the OFF position.
5. Remove three 10−24 × 0.75 inch hex socket head cap screws securing collimator assembly to X−ray tube. See Illustration 2−2.

ILLUSTRATION 2−3
PORT AND COLLIMATOR INTERFACE PLATE INSTALLATION

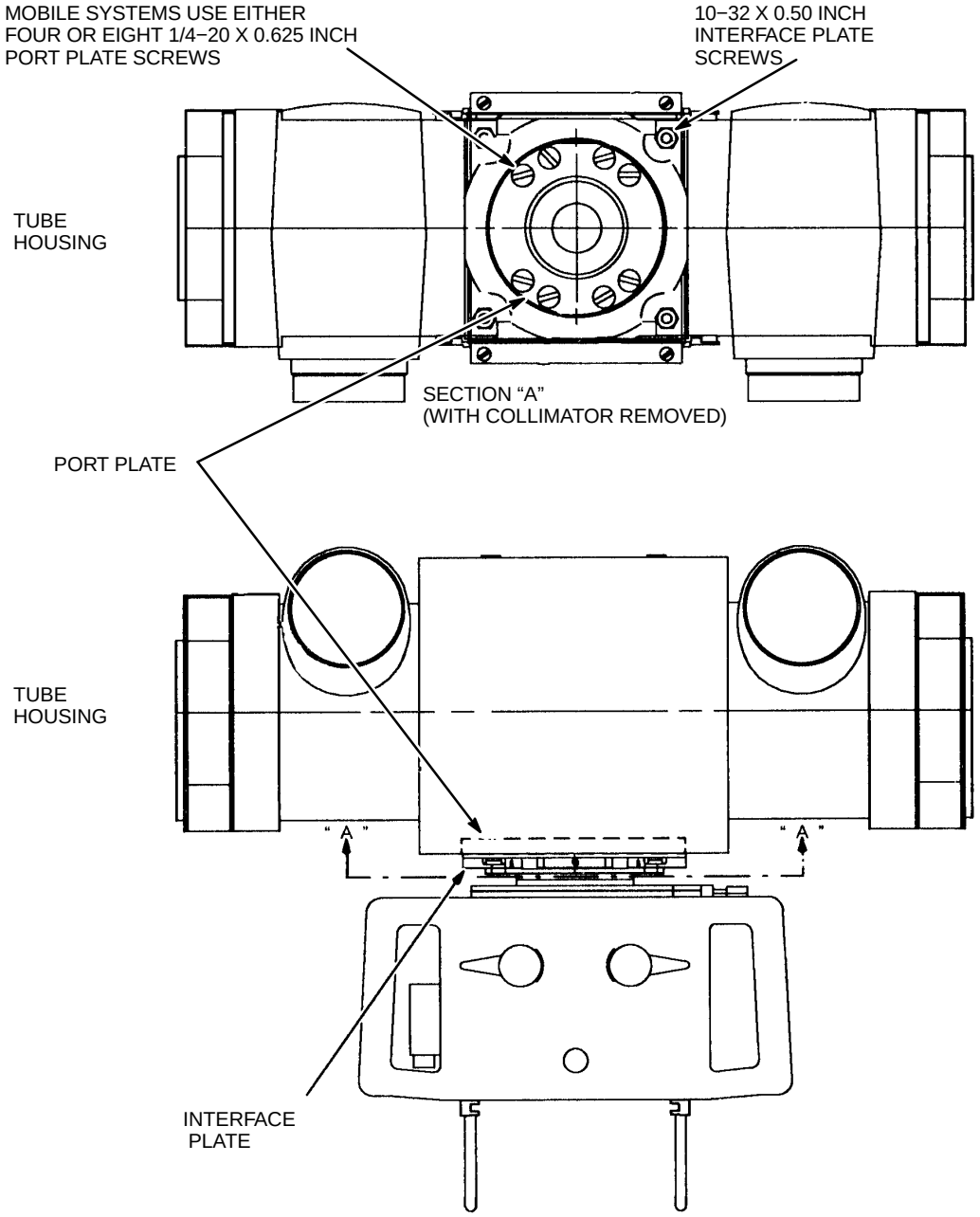

6. Remove collimator from interface plate. See Illustration 2−3.
7. Carefully place collimator and cables on horizontal arm.
8. Check that each X−ray port plate screw is securely fastened in place.
9. If any port plate screw is loose, unscrew it until it touches the interface plate.

NOTICE

Do not remove collimator interface plate. This plate is factory aligned and should not be disturbed. (However, if any of the interface plate screws are loose, re-torque them to 32−40 pound−inches (3.6−4.5 N−m)).

10. Tighten the port plate screw to 45−50 pound−inches (5.1− 5.6 N−m) using tools in Collimator Service kit P/N 5340328.

11. Turn collimator upside down and insert cone into the tube port interface plate. Align mounting screw holes.
12. Attach collimator assembly to tube port interface plate with three 10−24 × 0.75 inch hex socket head cap screws. Torque to 50−60 pound−inches (5.6−6.8 N−m).

2-3 Collimator Installation

1. Disconnect power from the unit by switching the main circuit breaker to the OFF position.
2. Horizontal arm assembly is in parked position on top cover of unit (or counterweight is secured)
3. X−ray tube is facing upward.

NOTICE

Equipment Damage: Do not bump the cone when handling the collimator, especially when mounting it on the tube. It is made of lead and damages easily.

NOTICE

For systems manufactured On or After June 10th, 2006 there is an additional 1.2 mm Aluminum filtration cup addedto the X−Ray Tube. This cup must be present and installed to meet regulatory HVL requirements. Likewise is this cup is provided with a replacement tube it must be removed for systems manufactured before June 10th, 2006. Reference the system rating plate affixed to the AMX Unit.

4. Turn collimator upside down and insert cone into the tube port interface plate. Align mounting screw holes.
5. Attach collimator assembly to tube port interface plate with three 10−24 × 0.75 inch hex socket head cap screws. Torque to 50−60 pound−inches (5.6−6.8 N−m).
6. Route collimator cable along the cathode cable to strap point on side of the column. Secure collimator cable in place with ty−raps to the cathode cable. See Illustration 2−1.
7. Drape the cable from the side of the column to the terminal box on the back of the column. Insert the cable with a Heyco bushing up through the bottom of the terminal box.
8. Connect collimator cable leads to terminal block in accordance with connection data recorded and tagged on leads.
9. Position back cover on terminal box and secure with two screws.
10. Rotate X−ray tube and collimator assembly to a port down position.

Note: If the collimator being installed is a replacement, perform “Beam Quality (Half Value Layer)” in Direction 2173227−100 *AMX−4+ Periodic Maintenance*. Also perform “Functional Test − Manual Rad Collimator Version” in Tab 6 of Direction 46−013894, *System Field Test for HHS*.

2-4 Tape Measure Replacement

Note: This procedure is for the **Micro Medical Systems** collimator (46−270615P2) only. For the **Medys** collimator (46−270615P3), the tape measure is not a replaceable part.

1. Remove the two (2) Phillips screws (M3x6) which attach the old tape measure to the left−side collimator cover.
2. Install the new tape measure and tighten the screws:
   - For a HRT X−ray tube (46−155750G804), use the upper mounting holes of the tape measure.
   - For an Orion X−ray tube (2185226), use the lower mounting holes of the tape measure.

2-5 Field Lamp Replacement

1. Disconnect power from the unit by switching the main circuit breaker to the OFF position.
2. Remove the rear cover on the collimator by removing four metric Phillips head screws holding it in place. Remove the cover.
3. Close the collimator blades. This makes it easier to reach the lamp for removal and replacement.

NOTICE

Potential for equipment damage (field lamp): Field lamp should never be touched with bare fingers since chemicals on skin will damage lamp and reduce its useful life. Always use gloves, tissue or soft cloth when handling lamp. If the outside of the lamp becomes contaminated, clean with a soft cloth dampened in water. Wipe dry after cleaning.

4. Carefully remove the lamp by pulling it straight back and out of its receptacle. Replace it with a new lamp. Refer to renewal parts listing for correct lamp. See Illustration 2−4.
5. Whenever a lamp is replaced, the light field intensity must be checked. Refer to the HHS Collimator Test section of Direction 46−013894 (System Field Test for HHS).
6. Whenever a lamp is replaced, the light field and X−ray field sizes must be checked to be certain the difference between them does not exceed a specified maximum tolerance. Refer to Section 2-6, *Light Field Adjustment,* to make these measurements and any necessary adjustments.

ILLUSTRATION 2−4
FIELD LAMP REPLACEMENT

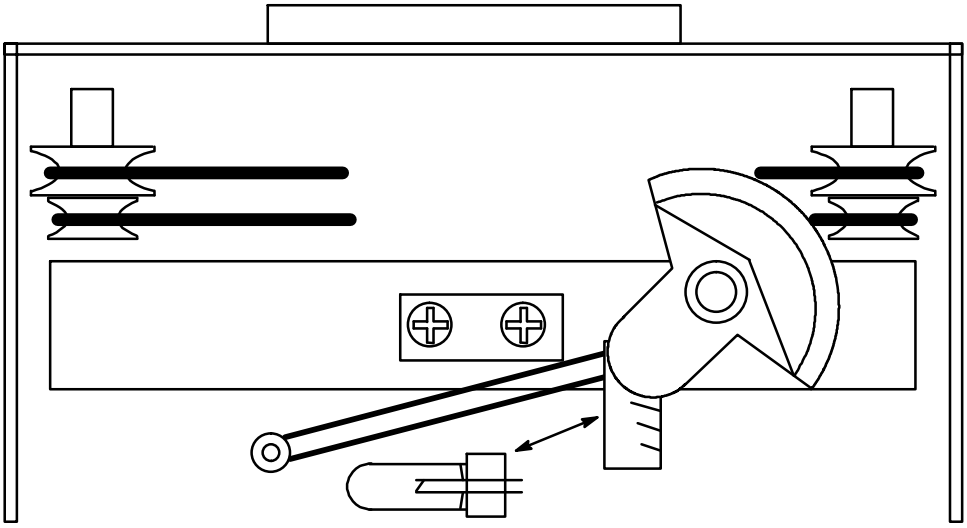

2-6 Light Field Adjustment

The X−ray field and light field must be properly aligned to meet HHS requirements. Two methods for accomplishing this are given below.

Method 1, Section 2-6-1 is only used if the “Light Field to X−Ray Field Test Pattern,” 46−198466P1, from an HHS Field Test Kit, 46−177372G1, is available.

Method 2, Section 2-6-2, uses lead strips to indicate the light field areas.

2-6-1 Adjustment Method 1

1. Place loaded cassette (14 × 17 inches suggested) on floor directly beneath collimator.
2. Adjust the collimator so that it is parallel to the cassette.
3. Set SID to 40 inches.
4. Place light field to X−ray field test pattern on top of cassette.
5. Turn on field lamp.
6. Adjust collimator blades so light field exactly covers the 8 × 10 inch (20.32 x 25.4 cm) rectangle on the test pattern. See Illustration 2−5.

ILLUSTRATION 2−5
APPEARANCE OF X−RAY FIELD AND LIGHT FIELD ALIGNMENT ON EXPOSED FILM USING TEST PATTERN

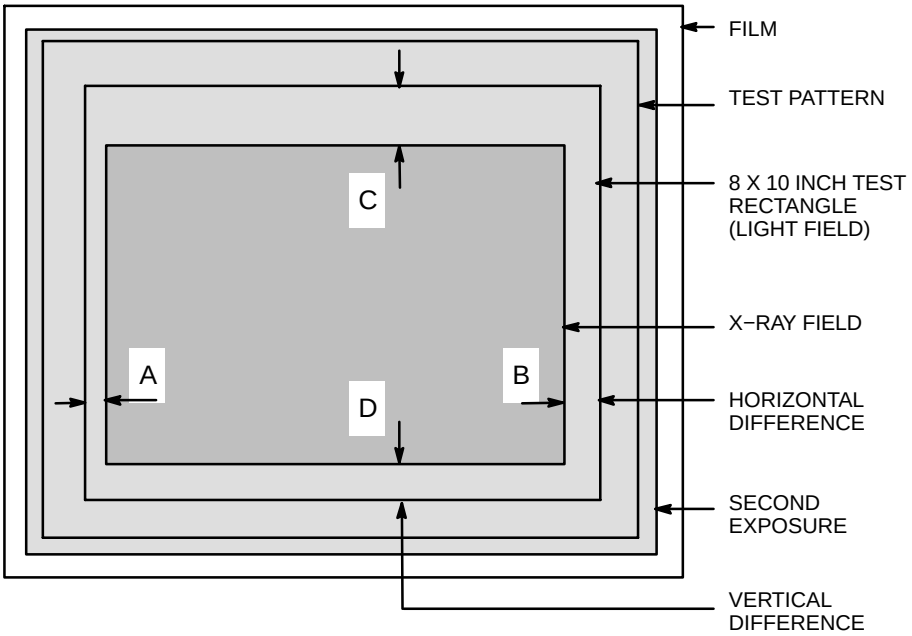

7. Expose film.
   > 60 kVp, 2 mAs.
   > Do not disturb the cassette and pattern because a second exposure is to be made.
8. Open collimator blades wide enough to include test pattern.
9. Expose film a second time and develop the film.
   > 60 kVp, 2 mAs.
   > This exposure should include the 8×10 inch rectangle. Refer to Illustration 2−5. If the rectangle does not show, reload the cassette and repeat steps 1 through 8 but open the collimator blades in step 7 wider than last time.
10. Measure and record the horizontal A & B distances, in inches, between the X−ray field and the light field. See Illustration 2−5.
11. Measure and record the vertical C & D distances, in inches, between the X−ray field and the light field. See Illustration 2−5.

12. The total of the horizontal differences as well as the total of the vertical differences must each be less than 1.8% of the SID:
    > A + B < 1.8% SID = A + B < 0.018 × 40 inches = A + B < 0.72 inches
    > C + D < 1.8% SID = C + D < 0.018 × 40 inches = C + D < 0.72 inches

If the above requirements are met, go to step 18. If they are not met, proceed with the following steps.

Note: Ideally, the X−ray field and the light field should coincide but this is rarely the case. The best compromise is to move the light field so the X−ray field is centered within it. Usually the light field area will be larger than the X−ray area. The size and location of the light field can be adjusted by moving the bulb.

13. To place the two fields as close to coincidence as possible, only the light field area is moved. The light field area adjustment is made by repositioning the field lamp housing.
14. Loosen the two Phillips head adjustment screws located in the back of the collimator. See Illustration 2−6.

ILLUSTRATION 2−6
FIELD LAMP ADJUSTMENT

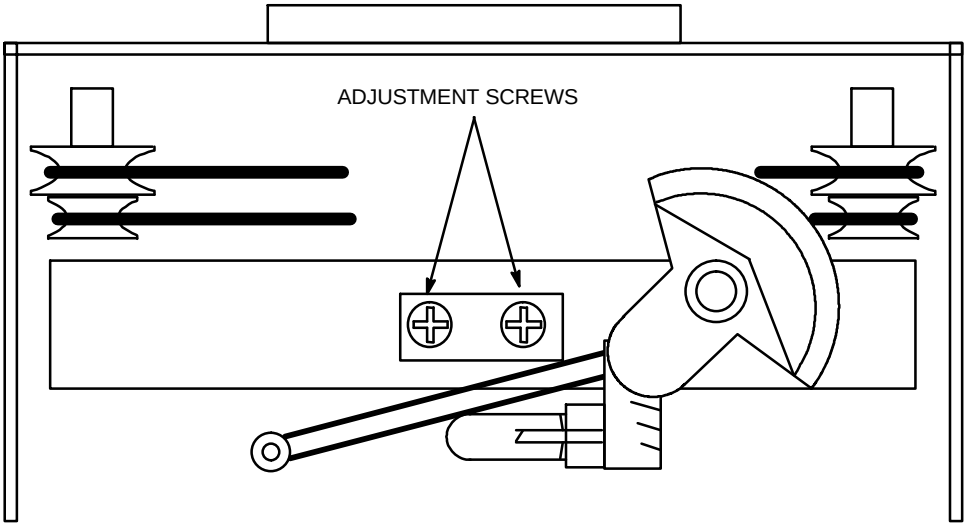

15. Examine the last exposure and determine which direction to move the field lamp to best position it around the X−ray field.
16. Turn on the field lamp.

⚠ CAUTION **Bright light might cause temporary blindness: Components are hot in the high energy field lamp adjustment area. Do not look directly at the field lamp.**

17. The field lamp adjustment area will be hot, so use a metal tool to move the bracket when repositioning the light field area on the film cassette.
18. When the light field area has been repositioned equal distant around the X−ray field, tighten the adjustment screws. Alternately tightening the two screws will help prevent the bracket from slipping out of place.
19. Repeat steps 1 through 16 until the “percentage of SID” requirements are obtained.

Note: If the percentage of SID requirement cannot be obtained, the light field is either too large or in rare instances too small. In this case the collimator will have to be returned to the factory.

20. Replace the back cover and fasten it in place with four metric Phillips head screws.
21. After any adjustment to the field light area, the collimator crosshair window position should be checked and corrected if necessary. Refer to Section 2−7.

2-6-2 Adjustment Method 2

1. Place loaded cassette (14 × 17 inches (35.56 x 43.18 cm) suggested) on floor directly beneath collimator.
2. Set SID to 40 inches.
3. Set collimator for 8 × 10 inches.
4. Turn on field lamp.
5. Place lead strips at each corner of light field to indicate size of field. See Illustration 2−7 .
6. Expose film. Do not move film cassette.
   > 60 kVp, 2 mAs.
7. Open collimator blades.
8. Expose film a second time and develop the film.
   > 60 kVp, 2 mAs.

Note: This exposure should include the lead strips marking the corners of the light field. See Illustration 2−7. If the lead strips do not show, reload the cassette and repeat steps 1 though 8 but open the collimator blades in step 7 far enough to include the lead strips.

ILLUSTRATION 2−7
APPEARANCE OF X−RAY FIELD AND LIGHT FIELD ALIGNMENT ON EXPOSED FILM USING LEAD STRIPS

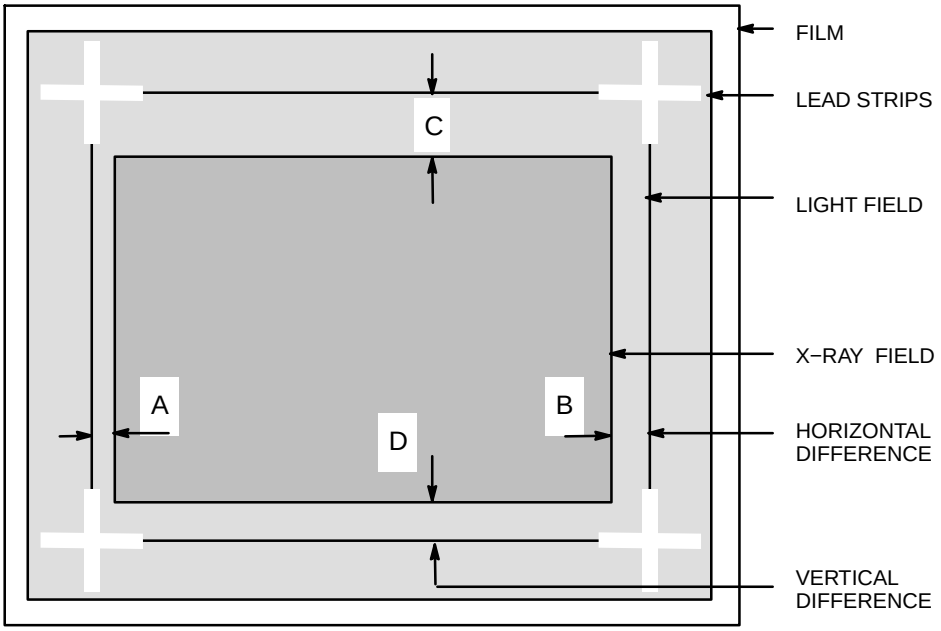

9. Measure and record the horizontal A & B distances, in inches, between the X−ray field and the light field. See Illustration 2−7.

10. Measure and record the vertical C & D distances, in inches, between the X−ray field and the light field. See Illustration 2−7.
11. The total of the horizontal differences as well as the total of the vertical differences must each be less than 1.8% of the SID:

    > A + B < 1.8% SID = A + B <0 .018 × 40 inches = A + B < 0.72 inches

    > C + D < 1.8% SID = C + D <0 .018 × 40 inches = C + D < 0.72 inches

    If the above requirements are met, go to step 18. If they are not met, proceed with the following steps.

Note: Ideally, the X−ray field and the light field should coincide but this is rarely the case. The best compromise is to move the light field so the X−ray field is centered within it. Usually the light field area will be larger than the X−ray area.

12. To place the two fields as close to coincidence as possible, only the light field area is moved. The light field area adjustment is made by repositioning the field lamp housing.
13. Loosen the two Phillips head adjustment screws located in the back of the collimator. See Illustration 2−8.
14. Examine the last exposure and determine which direction to move the field lamp to best position light field around the X−ray field.
15. Turn on the field lamp.

ILLUSTRATION 2−8
FIELD LAMP ADJUSTMENT

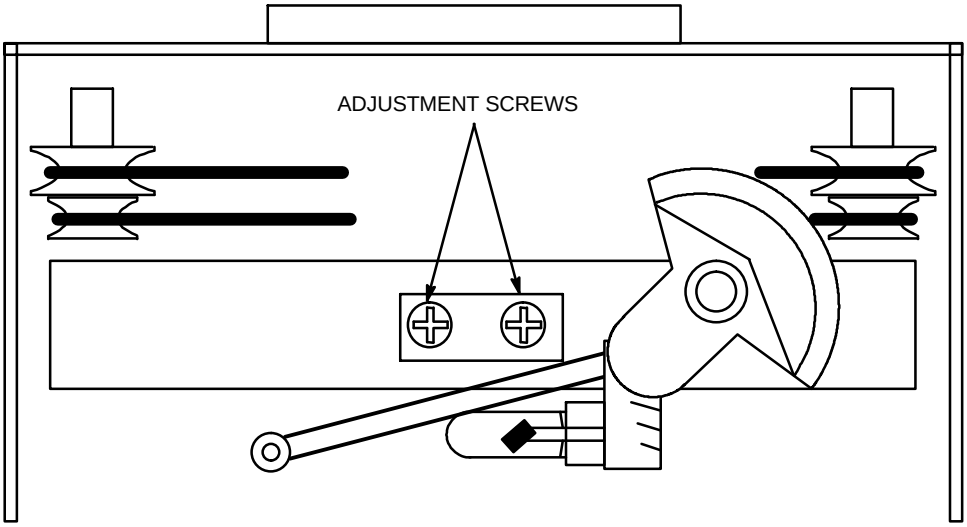

⚠ CAUTION

Bright light might cause temporary blindness: Components are hot in the high energy field lamp adjustment area. Do not look directly at the field lamp.

16. The field lamp adjustment area will be hot so use a metal tool to move the bracket when repositioning the light field area on the film cassette.
17. When the light field area has been repositioned equidistant around the X−ray field, tighten the adjustment screws. Alternately tightening the two screws will help prevent the bracket from slipping out of place.
18. Repeat steps 1 through 16 until the percentage of SID requirements are obtained.

Note: If the percentage of SID requirement cannot be obtained, the light field is either too large or in rare instances too small. In this case the collimator will have to be returned to the factory.

19. Replace the back cover and fasten it in place with four metric Phillips head screws.
20. After any adjustment to the field light area, the collimator crosshair window position should be checked and corrected if necessary. Refer to Section 2-7.

2-7 Crosshair Window Adjustment

1. After any adjustment to the field light area the collimator crosshair window position should be checked and corrected if necessary.
2. Place Light Field to X−Ray Field Test Pattern, 46−198466P1, directly under the collimator. If the test pattern is not available use a sheet of rectangular paper and draw a cross extending from exact center to each edge and parallel to the sides of the sheet.
3. Turn on field lamp and adjust collimator blades so edges of light field are coincident with the rectangle on the test pattern or the sides of the paper sheet. This may involve moving the test pattern or paper sheet.
4. Check the window crosshairs. The crosshairs must be within 1/4 inch of the pattern centerlines or cross (including the width of the crosshair shadow) over the entire length of the crosshairs.
5. If the window crosshairs are not properly aligned, go to step 7. If the window crosshairs are properly aligned, do not perform steps 7 through 9.
6. Loosen the four screws retaining the crosshair window in the bottom or exit side of the collimator.
7. Gently slide the window until the crosshairs are aligned with the test pattern centerlines or the cross on the paper.
8. Tighten the four screws retaining the crosshair window.

2-8 Field Light Switch Replacement

Note: This procedure is for the **Micro Medical Systems** collimator (46−270615P2) only. For the **Medys** collimator (46−270615P3), the field light switch is not a replaceable part.

1. Place horizontal arm in lock position.
2. Shut off power by turning the main circuit breaker to the OFF position.
3. Use a small screwdriver and very carefully pry the field light switch out of the collimator control panel. The switch press fits into the panel and will easily snap out of the panel. A short length of two wires will be attached to the switch. Use care not to scratch the panel during this procedure. See Illustration 2−2.
4. Unsolder the two wires.
5. Resolder two wires to the terminals on new replacement switch.
6. Carefully insert the switch and wires into the panel and press into place.

2-9 Field Size Pointer Replacement

Note: This procedure is for the **Micro Medical Systems** collimator (46−270615P2) only. For the **Medys** collimator (46−270615P3), the field size pointers are replaceable parts.

1. Use a 2 mm hex wrench to loosen the two (2) M4 setscrews that attach the knob to the shaft. Slide the knob off of the shaft.

2. Use a 1.5 mm hex wrench to loosen the two (2) M3 setscrews that attach the pointer to the shaft. Slide the pointer off of the shaft.
3. Slide the new pointer onto the shaft and lightly tighten the two set screws. Perform the following steps to correctly align the pointer:
   a. Place a loaded 12 inch x 14 inch cassette (or phosphor tool − 2120565) on the floor and center it to the collimator light field.
   b. Use the tape measure to position the collimator/X−ray tube at a 40 inch SID.
   c. Adjust the collimator so that the pointers are set for a 10 inch x 10 inch field.

WARNING **POTENTIAL EXISTS FOR EXPOSURE TO IONIZING RADIATION. USE A LEAD APRON OR STAND BEHIND LEAD SHIELDING DURING EXPOSURE.**

   d. Select 60kVp, 4−5 mAs (or follow exposure instructions on phosphor tool) and make an exposure.
   e. Measure the exposed area size on the developed film (or read from the phosphor tool).
   f. Verify that the indicated field size (as shown by the pointer) matches the actual exposed area size within 1.7% SID (0.68 inches).
   g. If necessary, loosen pointer setscrews, adjust pointer to match the measured size, then tighten the setscrews. Take another exposure to verify that the indicated field size (as shown by the pointer) matches the actual exposed area size within 1.7% SID (0.68 inches). Repeat this step until the specification is met.
   h. Install the knob onto the shaft and tighten the two setscrews.

2-10 Front Panel Replacement (Medys collimator)

Note: This procedure is for the **Micro Medical Systems** collimator (46−270615P2) only. For the **Medys** collimator (46−270615P3), the front panel is not a replaceable part.

1. Shut off power by turning the main circuit breaker to the OFF position.
2. Close the collimator blades.
3. Rotate the X−ray tube and collimator assembly so the collimator cross−hair window is facing upward.
4. Place horizontal arm in lock position.
5. Place the horizontal arm assembly in park position on the top cover of the unit.

CAUTION **Potential for sudden and unexpected arm motion: Secure the horizontal arm before removing components from the arm. Removing weight allows the counterweight to descend rapidly and the arm to ascend rapidly possibly causing damage to the unit and personal injury. Use Counterweight Lift Tool 46−303491G1 or equivalent service tool.**

6. Disassembly:
   a. Use a 2 mm hex wrench to loosen the two (2) M4 setscrews that attach the knob to the shaft. Slide the knob off of the shaft.
   b. Use a 1.5 mm hex wrench to loosen the two (2) M3 setscrews that attach the pointer to the shaft. Slide the pointer off of the shaft.
   c. Remove the rear cover on the collimator by removing four metric Phillips head screws holding it in place. Remove the rear cover.

d. Remove the two (2) Phillips screws (M3x6) which attach the old tape measure to the left−side collimator cover. Remove the tape measure.

e. Remove the four (4) screws M3x6 (Phillips) fastening the lateral cover to the top of the central body.

f. Remove the two (2) screws M3x6 (Phillips) fastening the lateral cover to the rear of the central body.

g. Remove the lateral cover by pulling it towards the rear of the collimator.

h. Unscrew the six (6) screws M3x6 (Phillips) fastening the front panel to the left and right sides of the central body, but **do not remove the front panel yet**.

Note: The screws are secured with thread fastener and may require additional effort to unscrew them.

i. Carefully examine the routing for the wires that are connected to the front panel so that you will be able to duplicate the routing when the new front panel is attached to the central body. If the cable routing is not correct, the front panel is difficult to install.

j. Carefully pull out the front panel. **Remember; the front panel is still linked to the central body by means of the switches connector.**

k. Disconnect the switches connector and remove the front panel.

7. Install the new front panel (reverse the disassembly sequence). If the new front panel does not line up with the six (6) mounting holes in the central body, make sure that the cable routing is the same as noted in step i (above).
8. Final Checks − When the new front panel is assembled with its knobs and pointers, perform the following checks and adjustments:
   a. Light Field adjustment (see Section 2-6 in this manual).
   b. Cross hair Window adjustment (see Section 2-7 in this manual).
   c. Field Size Indicator adjustment (see Section 2-9 in this manual).

2-11 Brake Switch Replacement

Note: This procedure is for the **Micro Medical Systems** collimator (46−270615P2) only. For the **Medys** collimator (46−270615P3), the brake switch is not a replaceable part.

1. Place horizontal arm in lock position.
2. Shut off power by turning the main circuit breaker to the OFF position.
3. To prevent parts from falling out of the collimator handles when opening them, rotate the X−ray tube to position the back side of the collimator handles pointing upward.
4. Select the switch to be replaced and remove the two Phillips head screws from the switch retaining plate. Remove the plate.
5. Lift off the switch button and button return spring.
6. Pull the switch from the handle.
7. Unsolder the two wires.
8. Solder the two wires onto the new replacement switch.
9. Place the new switch in the same position as the switch which was replaced.
10. Replace the button return spring and the switch button.
11. Replace the switch retaining plate. Install and tighten the two Phillips head screws.
12. Test the switch to be sure that it activates/deactivates, and does not stick in the ON position.

ILLUSTRATION 2−9
BRAKE SWITCH REPLACEMENT

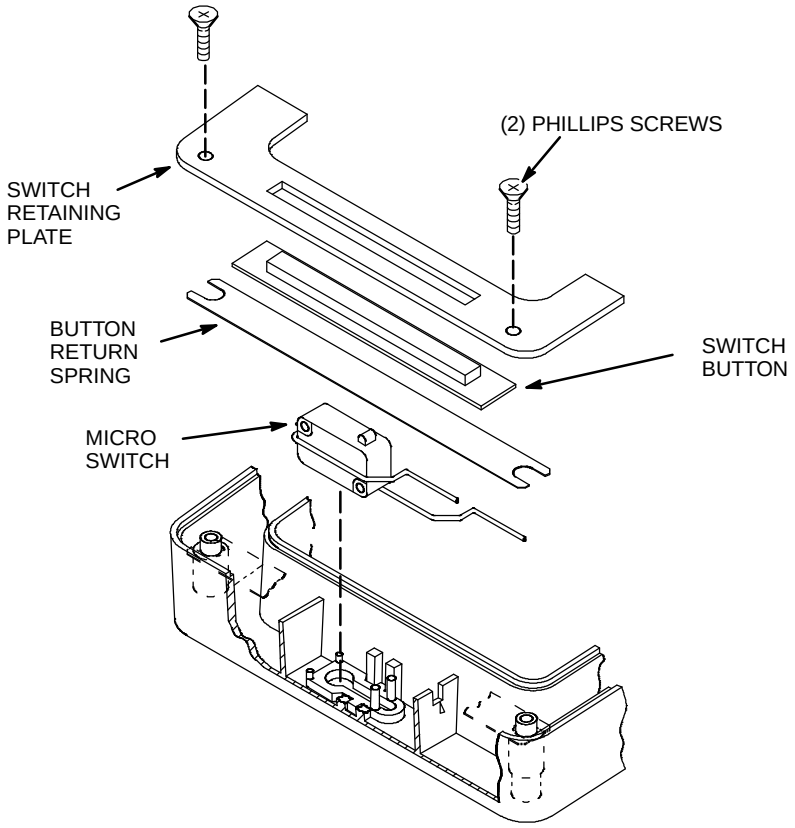

SECTION 3 − SERVICING THE X−RAY TUBE

This section provides procedures covering the removal and installation of the X−ray tube.

3-1 X−Ray Tube Removal

⚠ CAUTION

Secure the horizontal arm before removing components from the arm. Removing weight allows the counterweight to descend rapidly and the arm to ascend rapidly possibly causing damage to the unit and personal injury. Use the Counterweight Lift Tool 46−303491G1 or equivalent service tool.

1. Remove collimator from X−ray tube. Refer to Section 2-1, steps 1 through 10 for removal instructions.
2. Disconnect anode and cathode High Voltage cable connectors from X−ray tube. See Illustration 3−1.

ILLUSTRATION 3−1
X−RAY TUBE ASSEMBLY

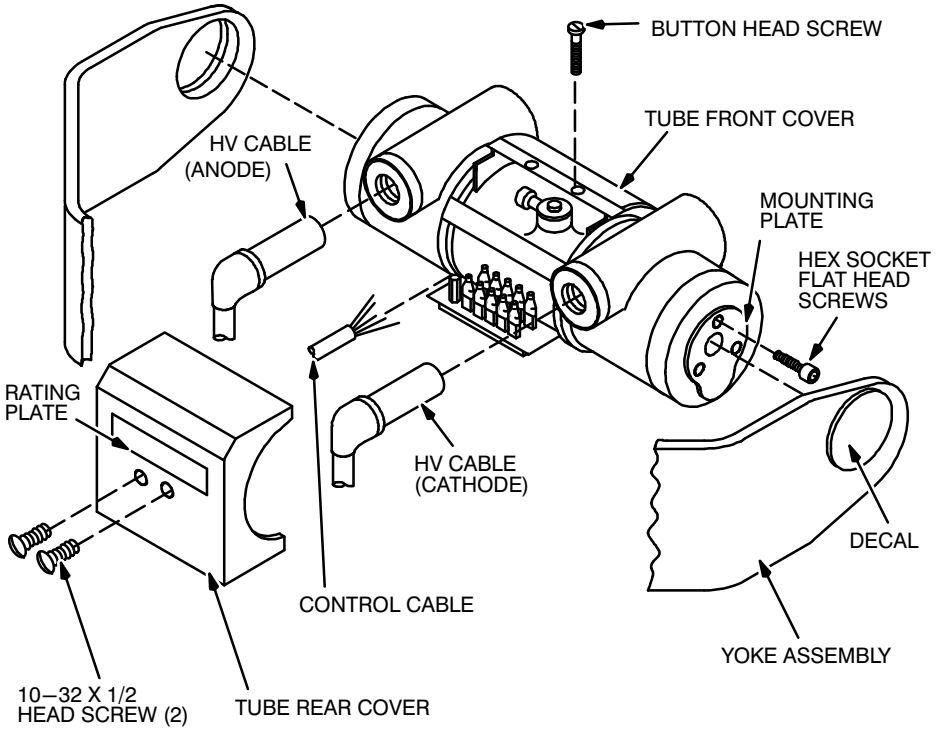

3. Remove four button head screws securing top and rear of back cover to X−ray tube and lift off cover.
4. Disconnect control cable leads from terminal block on tube cable bracket. Record and tag lead connections.
5. Remove cable clamp securing control cable to cable bracket by removing three socket head cap screws.
6. Support the X−ray tube and remove the three hex socket flat head screws securing each end of the tube to mounting plates on the yoke assembly.
7. Remove X−ray tube assembly from yoke assembly

3-2 X−Ray Tube Installation

NOTICE

For Tube Change there is an additional 1.2 mm Aluminum cup added to the X−Ray Tube. This cup must be present and retained for systems manufactured On or After June 10th, 2006. Likewise this cup if provided with the replacement tube must be removed for systems manufactured before June 10th, 2006. Reference the system rating plate affixed to the AMX unit.

1. For systems manufactured On or After June 10th, 2006 an additional 1.2 mm Aluminum filtration cup is added to the X−Ray Tube. The presence of this cup is easily identified as you cannot see the glass tube port. The cup is retained by clipping onto the Collimator mounting plate.
   i. Carefully remove filtration cup from original tube.
   ii. Carefully insert filtration cup onto replacement tube. Ensure cup is secure.
   iii. Install new filtration label, part # 5179736, next to the system rating plate.

Note: In the event the filtration cup is missing or unavailable for transfer from the old tube, order part number 5180389. This kit contains a label and a new filtration cup.

2. Support X−ray tube assembly in a position between mounting plates on yoke assembly. See Illustration 3−1.
3. Attach each end of tube to mounting plates with three hex socket flat head screws. Torque to 50 pound−inches (5.6 N−m).
4. Position control cable in tube cable bracket. Replace cable clamp and secure in place using three socket head cap screws.
5. Connect control cable leads to terminal block on tube cable bracket in accordance with connection data recorded and tagged on leads.

Note: If installing a new tube, use color code and match leads.

6. Position back cover on X−ray tube assembly and secure to tube with four 10−32 × 1/2 inch button head screws.
7. Cover anode and cathode HV connectors with Silicone Insulating Compound, 46−125224P3. Refer to Direction 46−013288 *Bleeder, High Voltage, Dual Type*.
8. Insert anode and cathode connectors into X−ray tube and secure firmly in place.
9. Check that tube rotates smoothly in yoke assembly when rotated forward and backward between detent positions on yoke mounting plates.
10. Install collimator on X−ray tube. Refer to Section 2-3, steps 1 through 9.
11. If a new tube is installed, the field light must be checked for proper positioning. Refer to Section 2-6, *Adjusting the Field Light,* for this procedure.

Note: If the tube being installed is a replacement, perform “Beam Quality (Half Value Layer)” in Direction 2173227−100 *AMX−4+ Periodic Maintenance*.

SECTION 4 − SERVICING THE HORIZONTAL ARM

This section provides procedures covering the removal and installation of the field serviceable assemblies and parts comprising the horizontal arm assembly.

4-1 Yoke Assembly Removal

⚠ CAUTION

Secure the horizontal arm before removing components from the arm. Removing weight allows the counterweight to descend rapidly and the arm to ascend rapidly possibly causing damage to the unit and personal injury. Use Counterweight Lift Tool 46−303491G1 or equivalent service tool.

1. Remove the collimator. Refer to Section 2.
2. Remove the X−ray tube. Refer to Section 3.

⚠ WARNING

POTENTIAL FOR EYE INJURY: WEAR EYE PROTECTION WHEN REMOVING THE YOKE ASSEMBLY, SOME PARTS ARE SPRING LOADED AND MAY CAUSE INJURY.

3. Holding cover in place, remove four capscrews securing cover to end of horizontal arm shaft. A spring loaded detent positioning assembly is retained by the cover. Reach behind the cover, hold the detent assembly in place and carefully remove cover. See Illustration 4−1.

ILLUSTRATION 4−1
YOKE ASSEMBLY

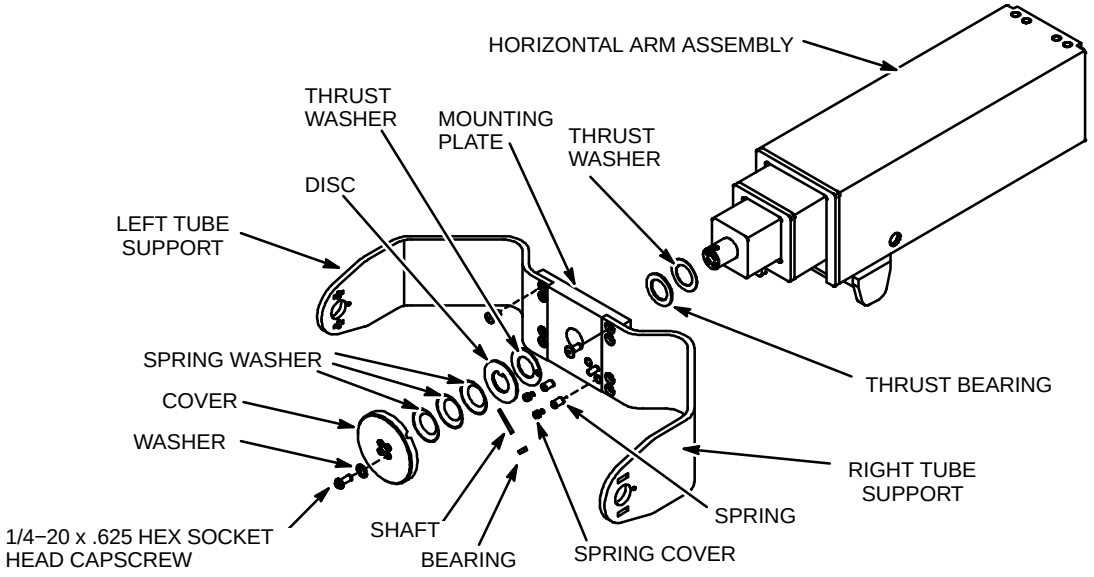

4. Carefully remove the detent assembly consisting of two spring covers, two springs and one shaft with one bearing from recessed location in yoke mounting plate.
5. Slide three spring washers, disk, thrust washer and yoke mounting plate from the shaft on horizontal arm.
6. Remove thrust bearing and thrust washer from horizontal arm shaft.

4-2 Yoke Assembly Installation

WARNING

EYE INJURY! WEAR EYE PROTECTION WHEN REMOVING THE YOKE ASSEMBLY, SOME PARTS ARE SPRING LOADED AND MAY CAUSE INJURY.

1. Lubricate thrust bearing with small amount of lithium (Fiske 630−A−A or equal) grease.
2. Install thrust washer and thrust bearing on horizontal arm shaft. See Illustration 4−1.
3. Place yoke mounting plate with tube supports on horizontal arm shaft.
4. Slide thrust washer, disk, and three spring washers onto horizontal arm. (Concave side of spring washer facing you)
5. Place two springs and spring covers into recessed position in face of mounting plate.
6. Place shaft with bearing on the two springs and carefully install cover over end of horizontal arm shaft.
7. Hold cover in place on horizontal arm shaft to prevent detent assembly from springing loose and secure with four capscrews.
8. Install the X−ray tube. Refer to Section 3.
9. Install the collimator. Refer to Section 2.

4-3 Yoke Mounting Plate Assembly Removal

1. Remove collimator. Refer to Section 2.
2. Remove the X−ray tube. Refer to Section 3.

Right Mounting Plate Assembly (See Illustration 4−2)

3. Remove decal from cover on end of right tube support to access the cover mounting screws.
4. Remove four screws holding cover to mounting plate shaft.
5. Remove cover, two spring washers, two thrust washers and thrust bearing from mounting plate shaft.
6. Slide shaft, disk, and mounting plate from right tube support.
7. Remove two small bearings and their shaft from right tube support.
8. Remove four screws holding shaft and disk to mounting plate.
9. Remove shaft and disk from mounting plate.

ILLUSTRATION 4−2
RIGHT MOUNTING PLATE ASSEMBLY

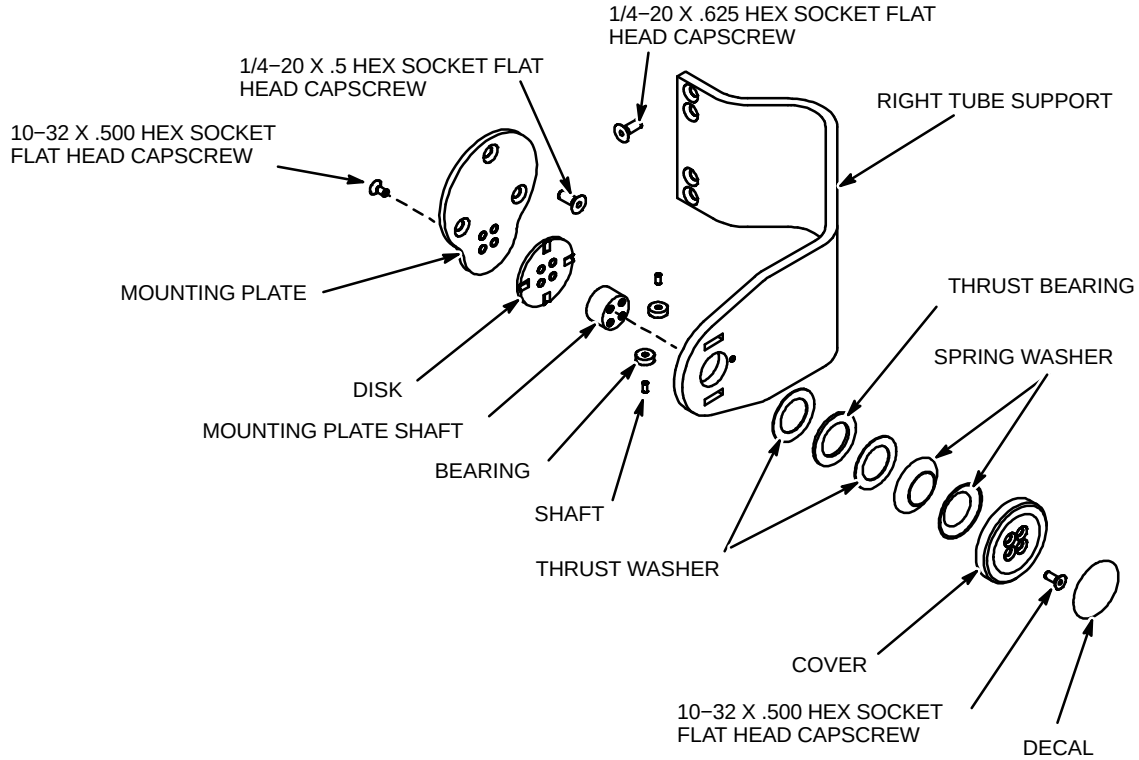

Left Mounting Plate Assembly (See Illustration 4−3)

10. Remove decal from cover on end of left tube support to access the cover mounting screws.
11. Remove four screws holding cover to mounting plate shaft.
12. Remove two spring washers, disk and thrust washer from mounting plate shaft.
13. Slide shaft, thrust washer, dowel pin, disk, and mounting plate from left tube support.
14. Remove thrust washer and dowel pin from shaft.
15. Remove four screws holding shaft and disk to mounting plate.
16. Remove shaft and disk from mounting plate.
17. Remove eight hex socket flat head capscrews holding right and left tube support arms to mounting plate.
18. Remove tube supports.

ILLUSTRATION 4−3
LEFT MOUNTING PLATE ASSEMBLY

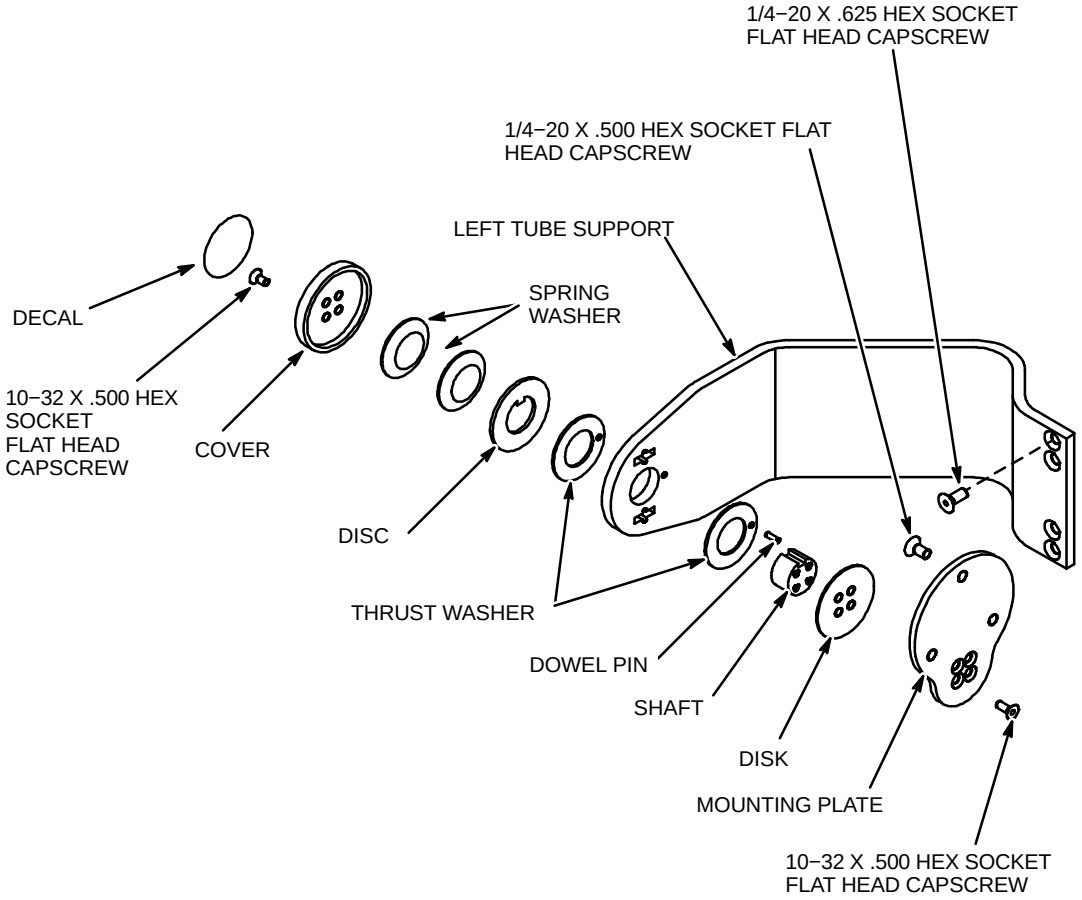

4-4 Yoke Mounting Plate Assembly Installation

Right Mounting Plate Assembly

1. See Illustration 4−2. Place mounting plate shaft and disk on mounting plate.
2. Secure shaft and disk to mounting plate with four capscrews.
3. Replace two small bearings and their shaft in right tube support.
4. Slide mounting plate shaft with disk and mounting plate into right tube support.
5. Replace two thrust washers and thrust bearing, two spring washers and cover on mounting plate shaft. (Spring washers, concave side facing out)
6. Secure cover to mounting plate shaft with four capscrews.
7. Replace decal on cover.

Left Mounting Plate

8. See Illustration 4−3. Place mounting plate shaft and disk on mounting plate.
9. Secure shaft and disc to mounting plate with four capscrews.
10. Replace washer and dowel pin on mounting plate shaft.
11. Slide mounting plate shaft with washer, dowel pin, disk and mounting plate into left tube support.

12. Replace washer, disk and two spring washers on mounting plate shaft. (Spring washers, concave side facing out)
13. Secure cover to mounting plate shaft with four capscrews.
14. Replace decal on cover.
15. Install the X−ray tube. Refer to Section 3.
16. Install the collimator. Refer to Section 2.

4-5 Horizontal Arm Assembly Removal

⚠ CAUTION

Equipment Damage! Secure the carriage before removing components from the arm. Removing weight allows the arm to ascend rapidly possibly causing damage to the unit and personal injury.

1. Check that the carriage is securely held in place, and that the horizontal arm cannot move upward.
2. Support the X−ray tube and collimator using chain hoist or other suitable equipment.
3. Remove the eight hex socket flat head screws that hold the yoke with tube head and collimator to the mounting plate on the horizontal arm. See Illustration 4−4.

ILLUSTRATION 4−4
REMOVAL AND REMOUNTING OF X-RAY TUBE AND COLLIMATOR ASSEMBLY

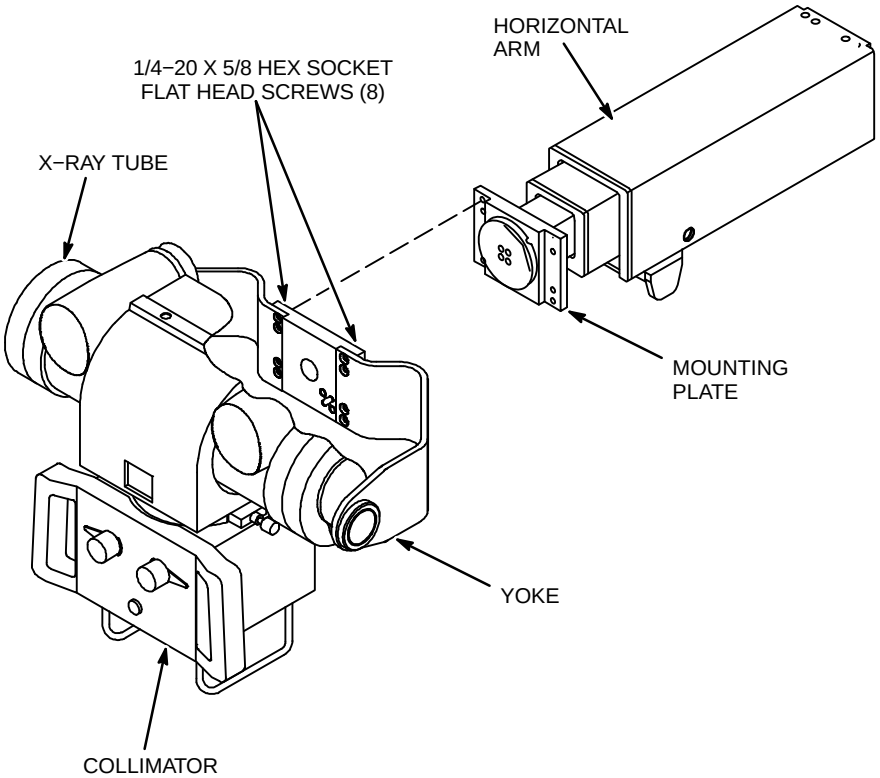

4. Lower tube and collimator gently to the floor.
5. Remove seven screws securing horizontal arm assembly to carriage in vertical column. See Illustration 4−5. Discard screws.
6. Remove horizontal arm from carriage.

ILLUSTRATION 4−5
HORIZONTAL ARM MOUNTING

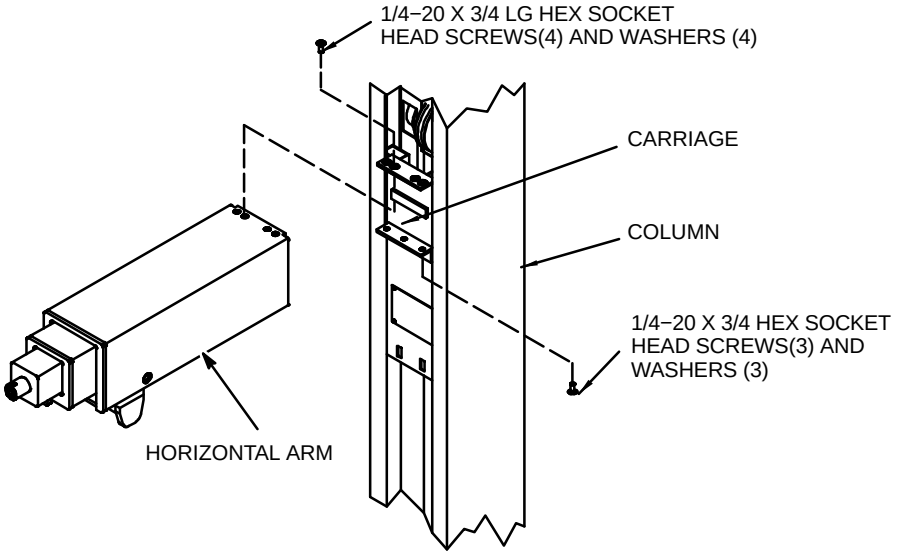

4-6 Horizontal Arm Assembly Installation

Note: The counterweight must be at the bottom of the column or otherwise immobilized.

1. Mount horizontal arm assembly on carriage assembly flanges. See Illustration 4−5.
2. While supporting the arm, secure it firmly in place with six mounting screws. Torque to 110 pound−inches (12.3 N−m).
3. Route brake cable along the anode cable to strap point on side of the column. Secure brake cable to the anode cable with ty−raps.
4. Drape the cable from the side of the column to the terminal box on the back of the column. Insert the brake cable with a Heyco bushing up through the bottom of the terminal box.
5. Connect brake cable leads to terminal block in accordance with connection data recorded and tagged on leads.
6. Position back cover on terminal box and secure with two screws.

⚠ CAUTION

The horizontal arm must be secured before installing components on the arm. Do not rely on latch alone to hold it in place. With weight removed from the arm, the counterweight can descend rapidly and the arm ascend rapidly possibly causing damage to the unit and personal injury. Use Counterweight Lift Tool 46−303491G1 or equivalent service tool.

7. Firmly grasp the horizontal arm and using your weight to counterbalance the counterweight, approximately 75 pounds (34 kg), carefully move it down to the top of the unit and into parked position. Do not rely on latch alone to hold the arm in place. Check that the arm is locked down before slowly removing your weight and releasing it.
8. Re-mount the X−ray tube and collimator assembly per Illustration 4−4.
9. Check that the arm moves freely up and down the column.

4-7 Horizontal Arm Brake and Cable Assembly Removal

1. Remove horizontal arm assembly. Refer to Section 4-5.
2. Position horizontal arm assembly with latch block up.
3. Extend Horizontal Arm until clearance hole on underside is exposed.
4. Remove cable clamp. See Illustration 4−6.
5. Disconnect Brake Cable connection.
6. Remove the two stop block capscrews securing the brake and cable assembly to the end of the outer tube. See Illustration 4−6.

ILLUSTRATION 4−6
HORIZONTAL ARM OUTER, CENTER AND INNER TUBES

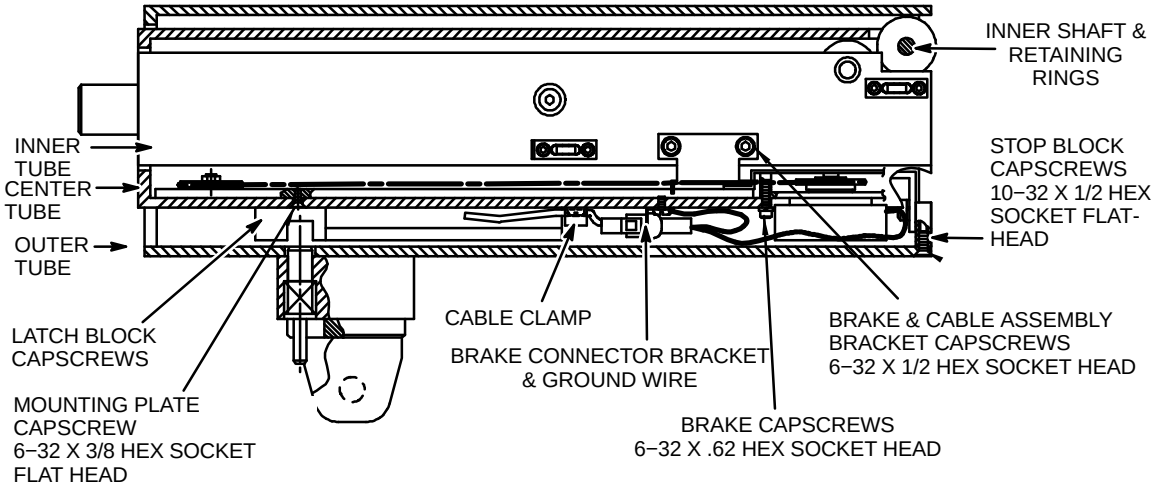

7. Return arm to upright position.
8. Slide the center and inner tubes from the outer tube.
9. Place center and inner tubes in upside down position.
10. Remove four screws holding latch block to center tube. Remove block. This provides access to the mounting plate holding screw. See Illustration 4−6.
11. Remove mounting plate capscrew holding brake and cable assembly to the center tube.
12. Remove the two brake capscrews holding the brake & cable assembly to the rear of the center tube.
13. Remove two or three screws (depends on unit you have) holding the connector bracket and ground wire to the center tube.
14. Remove two retaining rings from inner shaft on center tube. Slide shaft out permitting removal of two spacers and two bearings.
15. Carefully slide the brake and cable assembly, and the inner tube from the center tube.
16. Remove two capscrews holding the brake and cable assembly bracket to the inner tube.
17. Remove brake and cable assembly from inner tube.

4-8 Horizontal Arm Brake and Cable Assembly Installation

1. Mount the brake and cable assembly on the inner tube.
2. Secure the brake and cable assembly bracket to the inner tube with two capscrews. See Illustration 4−6.
3. Carefully slide the brake and cable assembly, and the inner tube into the center tube.
4. Replace the inner shaft, two spacers and two bearings. Secure with two retaining rings.

5. Place center and inner tubes in an upside down position.
6. Replace the two brake capscrews securing the brake & cable assembly to the rear of the center tube.
7. Secure the connector bracket and ground wire to the center tube with two or three screws (depends on unit you have).
8. Replace mounting plate capscrew holding brake and cable assembly to the center tube.
9. Replace the latch block and secure it with four screws to center tube.
10. Place the outer tube in an upside down position.
11. Slide the center and inner tubes into the outer tube.
12. Replace the two stop block capscrews and secure the brake and cable assembly to the end of the outer tube.
13. Connect Brake Cable.
14. Extend Horizontal Arm until clearance hole on underside is exposed.
15. Replace cable clamp.
16. Return arm to upright position.
17. Replace horizontal arm assembly. Refer to Section 4-6.

4-9 Horizontal Arm Brake Cable Removal

1. Remove horizontal arm brake and cable assembly. Refer to Section 4−7.
2. Remove cable clip from bar support assembly by removing one machine screw. See Illustration 4−7.

ILLUSTRATION 4−7
BRAKE AND CABLE ASSEMBLY

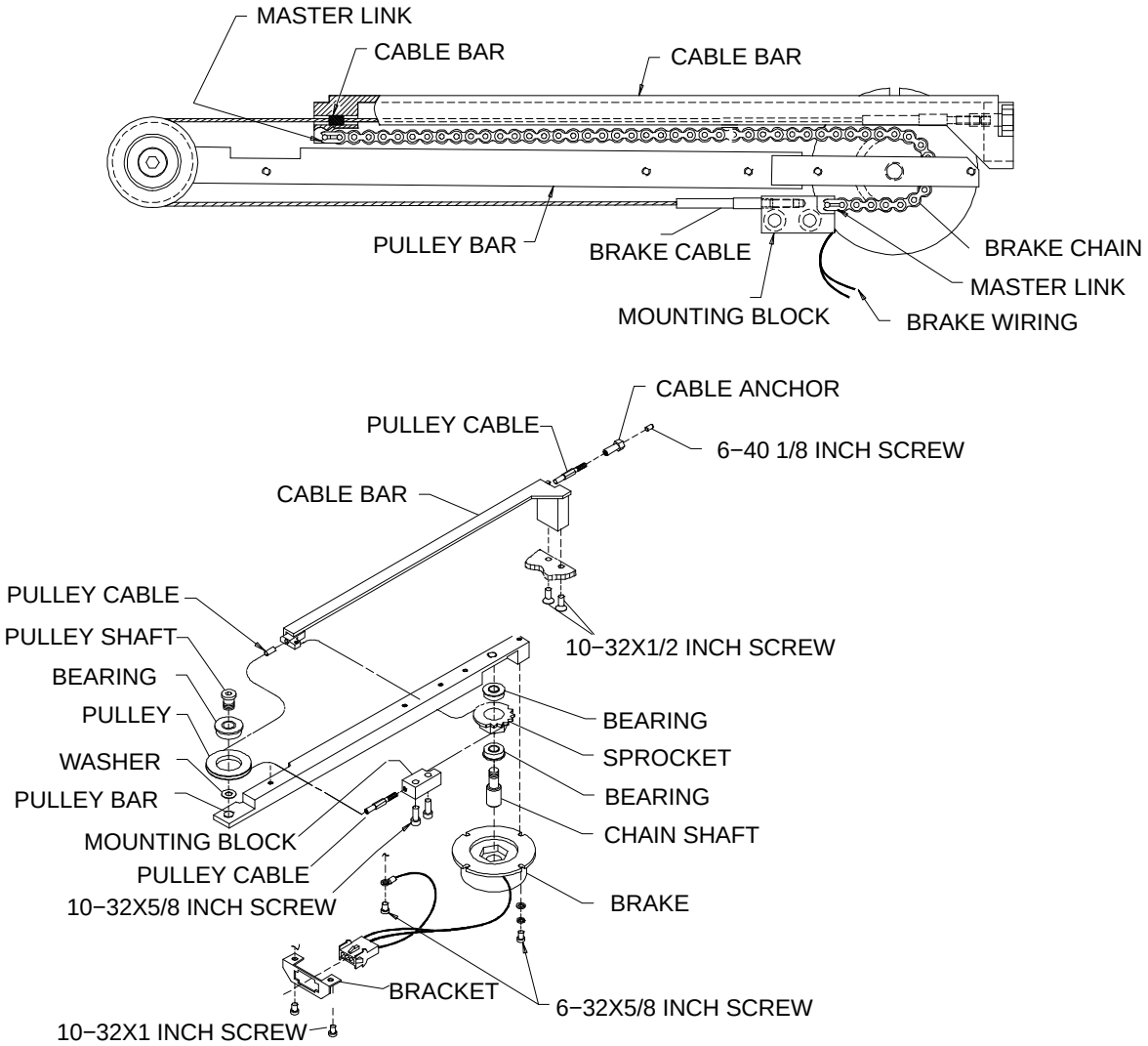

3. Remove anchor nut from brake cable by turning counterclockwise. This nut has been secured with set screws and Loctite.
4. Remove cable anchor end from bar support.
5. Slide ball end of cable from slot in cable bracket and remove from path around pulley end on mounting plate.
6. Remove the brake cable from brake and cable assembly.

4-10 Horizontal Arm Brake Cable Installation

1. Slide ball end of brake cable into slot in cable bracket on end of chain on brake and cable assembly. See Illustration 4−7.
2. Route anchor end of cable around pulley on end of mounting plate to opposite end of support bar and insert in slot.

3. Replace anchor nut on cable end and take up slack by turning nut clockwise. Do not overtighten.
4. Replace cable clip, with brake cable in place, on bar support assembly and secure with one machine screw.
5. Check that the cable and chain move freely.
6. Loctite the anchor nut.
7. Install horizontal arm brake and cable assembly. Refer to Section 4−8.

4-11 Horizontal Arm Brake Removal

1. Remove horizontal arm brake and cable assembly. Refer to Section 4−7.
2. Disconnect brake electrical cable connectors to remove from connector bracket.
3. Loosen remaining capscrew holding brake to mounting plate. See Illustration 4−7.
4. Slide brake off brake sprocket shaft.

4-12 Horizontal Arm Brake Installation

1. Slide brake onto brake sprocket shaft.
2. Secure brake with single capscrew in end of mounting plate. See Illustration 4−7.
3. Position brake electrical cable connectors in connector bracket and reconnect.
4. Install horizontal arm brake and cable assembly. Refer to Section 4−8.

SECTION 5 − SERVICING THE VERTICAL COLUMN

This section provides procedures covering the removal and installation of the field serviceable assemblies subassemblies and parts comprising the vertical column assembly.

5-1 Remove Vertical Column Assembly

1. Remove x−ray tube, collimator, and horizontal arm assemblies per Section 4−5.
2. Disconnect control cable leads from terminal block. Record and tag leads. See Illustration 5−1.
3. Remove Heyco bushing and cable through bottom of terminal box.
4. Clear all cables and wires from the column area.
5. Remove vertical column cap by removing two hex socket button head capscrews. See Illustration 5−1.
6. Attach lifting tool (46−303362P1 or equivalent service tool) to top of column with 2 screws.
7. Attach chain hoist to lifting tool (46−303362P1 or equivalent service tool) and take up slack. The chain hoist must be capable of lifting a seven foot (2.1 meter), 175 lb. (80 kg) column a minimum of two feet (61 cm), preferably 4 feet (122 cm).

ILLUSTRATION 5−1
COLUMN TRIM COVER REMOVAL

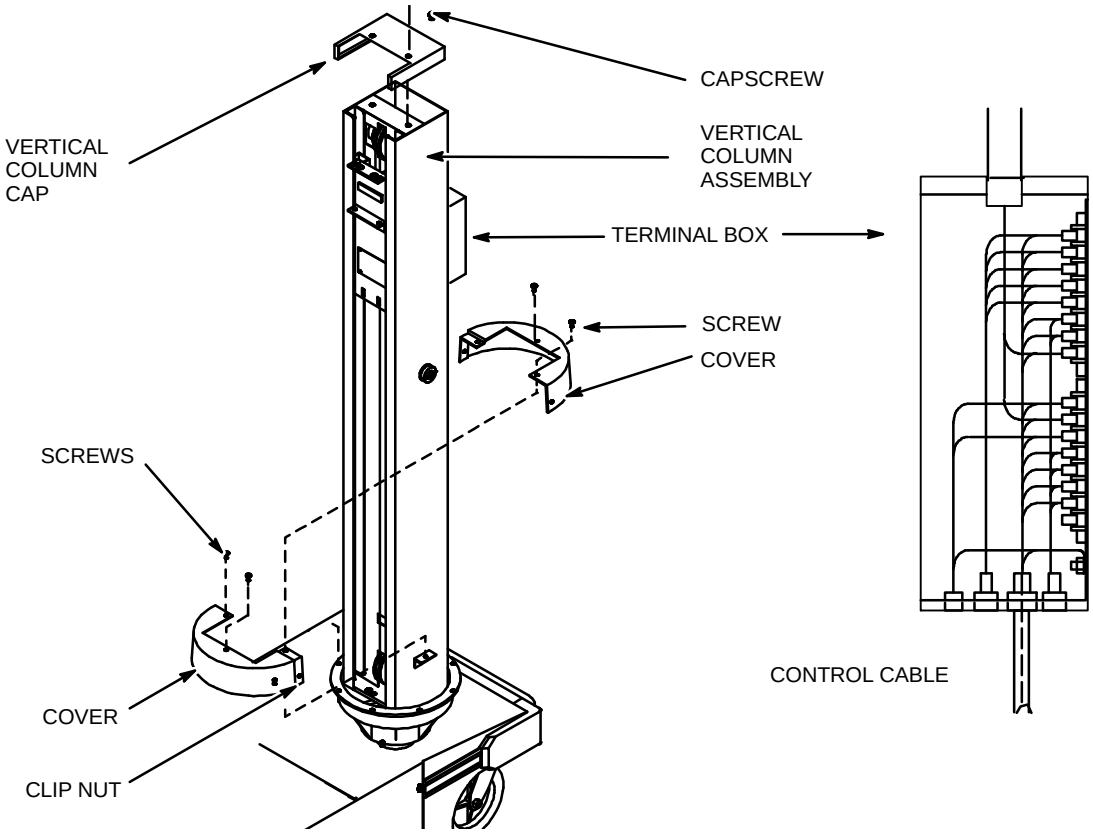

8. Remove trim cover from bottom of vertical column by removing three screws, two clip nuts and two binding head screws. See Illustration 5−1.
9. Remove 5 bearing plate screws and washers securing column to the column support base.

10. Remove two screws securing brake cable cover and disconnect the lower brake connectors. See Illustration 5−2.
11. Move brake cable connectors and cover away from column support base.
12. Break loose the column support bearing from the column support base by jacking the column out using three 1/4−20 screws thru the base plate and against the support base.
13. Lift the column and bearing plate out of the base.
14. Lower the column onto the floor or a table capable of supporting its weight. Carriage side must be upwards.
15. Remove the chain hoist and lifting tool.

ILLUSTRATION 5−2
VERTICAL COLUMN REMOVAL

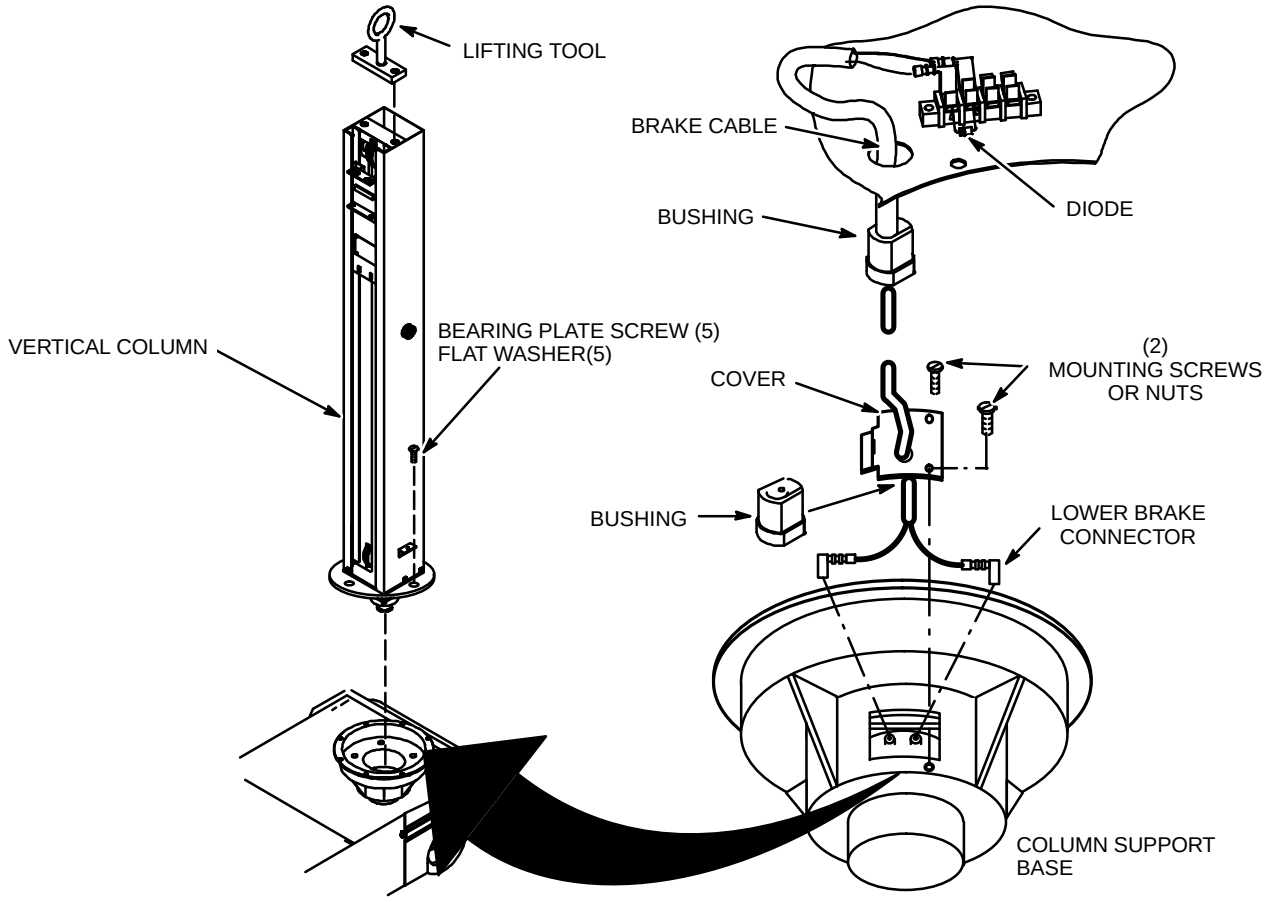

5-2 Install Vertical Column Assembly

1. Attach lifting tool (46−303362P1 or equivalent service tool) to top of pulley and brake assembly with two capscrews. See Illustration 5−2.
2. Attach chain hoist to lifting tool.

Note: Make sure screw holes are clean of oil, grease or debris.

3. Lower the column into the base. Carefully seat the bearing plate in the base with the mounting holes lined up and the lower brake connectors opposite the opening in the base. See Illustration 5−2.
4. Apply Loctite 242 (medium strength) to threads of five new column bearing plate capscrews.

Note: Torque cap screws to 100 pound−inches (11.3 N−m).

5. Install five new capscrews and five new flat washers and secure bearing plate to the column support base. See Illustration 5−2.
6. Connect brake connectors to brake. See Illustration 5−2.
7. Secure cover on column support base with two screws.
8. Replace trim cover at base of column. Refer to Section 6.
9. Insert control cable with Heyco bushing through bottom of terminal box located on back of vertical column. See Illustration 5−1.
10. Connect control cable leads to terminal block as recorded on tags.
11. Remove the chain hoist and lifting tool.
12. Replace trim cover on top of vertical column and secure with two hex socket button head capscrews. Refer to Section 6.
13. Replace horizontal arm. Refer to Section 4-6.
14. Then continue in Section 3-2 to remount x−ray tube and Section 2-3 to remount collimator assembly.
15. Check counterweight balancing. Refer to Section 5-5-3.

5-3 Counterweight Cables

Note: The follower cable should be replaced only if it shows signs of wear or deterioration, and can only be removed using the procedure in Sections 5-3-5 and 5-3-6.

The main and safety cable should be replaced periodically as defined in the Planned Maintenance section of the Operator Manual, or where elsewhere directed.

⚠ CAUTION

This procedure requires that the FE work at the top of the vertical column. Ensure proper safety precautions are taken against falls or loss of balance.

This procedure can result in dropping the counterweight to the bottom of the column if done incorrectly. If this occurs use the procedure in Sections 5-3-5 and 5-3-6 to replace the cables and reattach the counterweight.

1. Set the main power circuit breaker to OFF.
2. Position horizontal arm and tube at least 90 degrees out of park, so that it can be positioned at lowest possible position.
3. Raise horizontal arm to a comfortable working height.
4. Remove column cap.
5. Remove four binding head screws holding cover plate on the carriage assembly. See Illustration 5−3.

ILLUSTRATION 5−3
CABLE REPLACEMENT

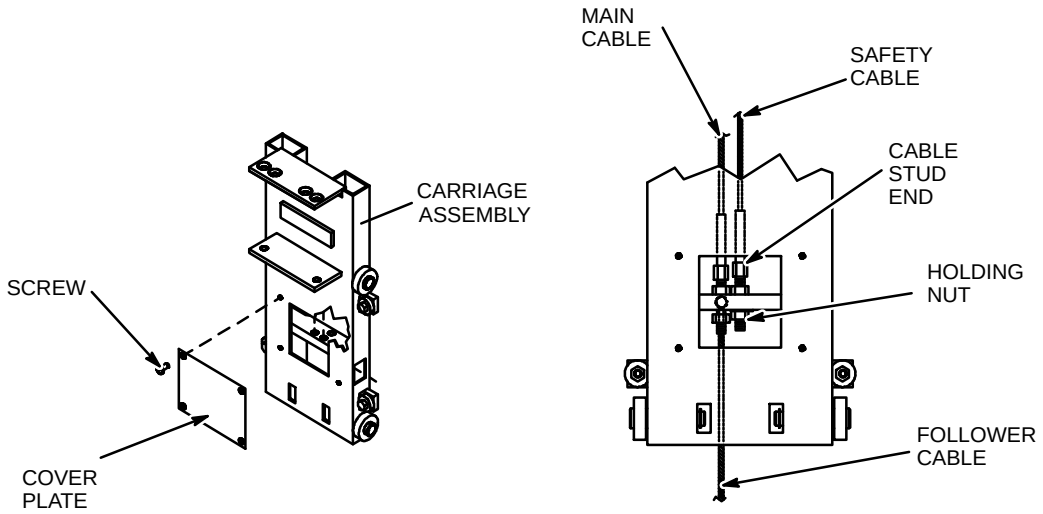

5-3-1 Main Cable

Note: Note the approximate position of the holding nuts on the main and safety cables before removal. Use this as a reference when reinstalling.

1. Loosen jam nut on top of stud end of main cable. Main cable is in front of follower and to the left of safety cables.

⚠ CAUTION **Sudden and unexpected motion can occur: After next step the counterweight is held only by the safety cable.**

2. Remove holding nut on bottom of stud end of main cable.
3. Remove cable stud from carriage cable mounting strut and remove jam nut from main cable.
4. Move horizontal arm to bottom of column. This raises the counterweight to the top of the column.

ILLUSTRATION 5−4
COUNTERWEIGHT AND CABLES

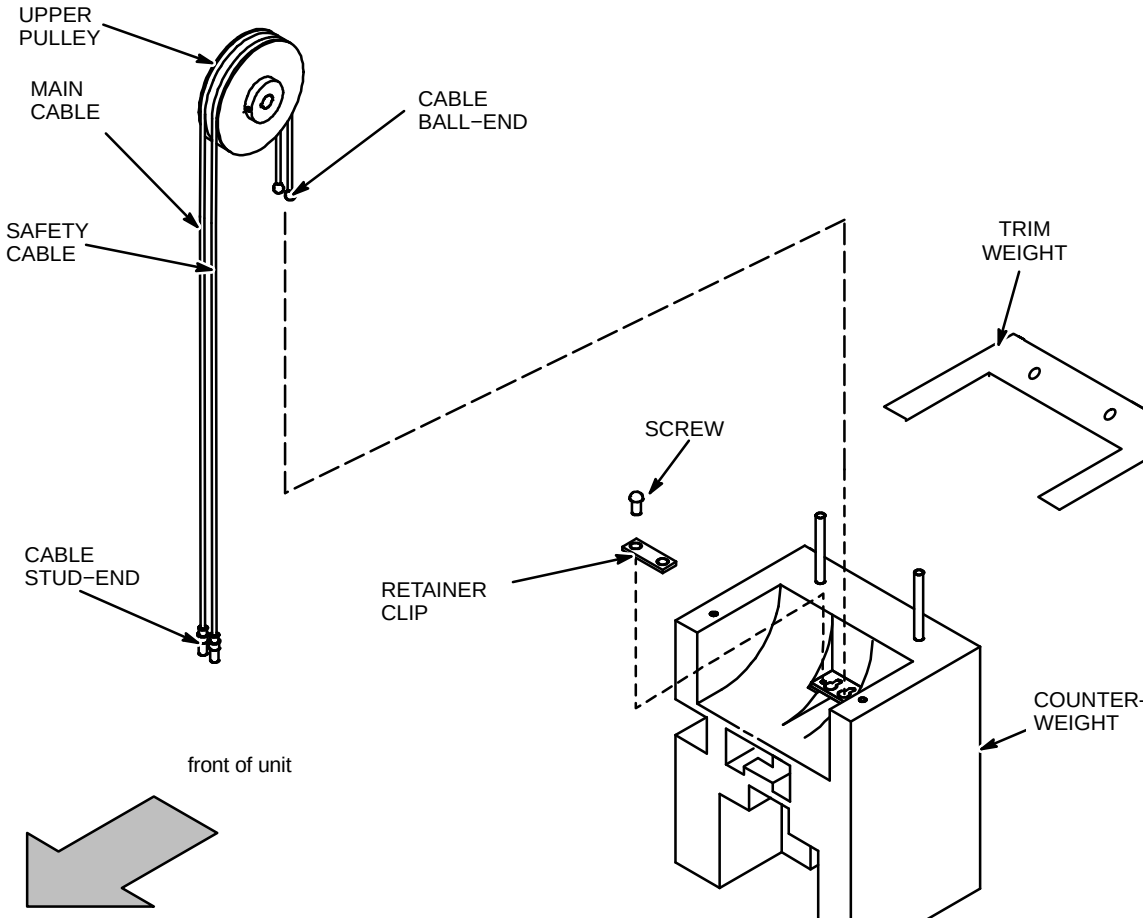

5. Use 1/4 in. slotted screwdriver to remove screw holding cable retainer clip on the main cable side of counterweight; loosen other screw and move the retainer clip so that the main keyhole slot is accessible.

Note: The positioning is awkward and the screw can be easily dropped.

6. Push main cable ball end out from counterweight keyhole slot.
7. Pull main cable ball end through top of column.
8. Remove old cable.
9. Push new main cable ball end through top of column over top of upper pulley and then into counterweight keyhole slot.
10. Place cable retainer clip back in position and tighten/insert screws.
11. Thread new main cable through back of carriage.
12. Raise vertical arm to comfortable working height.
13. Apply Loctite 242 to the entire length of threads on the cable stud. Install jam nut on cable stud.
14. Install cable stud through carriage horizontal bar and install holding nut.
15. Adjust tension of the main cable until the follower cable tension is in accordance with Section 5−3−4. Tighten main cable holding nut (main cable jam nut is tightened down after safety cable replacement).

Note: Do not allow cables to twist while setting tension.

5-3-2 Safety Cable

1. Loosen jam nut on top of stud end of safety cable.

⚠ CAUTION **After next step the counterweight safety mechanism is temporarily inactive until the new safety cable is installed.**

2. Remove holding nut on bottom of stud end of safety cable.
3. Remove cable stud from carriage cable mounting strut and remove jam nut from safety cable.
4. Move horizontal arm to bottom of column. This raises the counterweight to the top of the column.
5. Use 1/4 in. slotted screwdriver to remove screw holding cable retainer clip on the safety cable side of counterweight; loosen other screw and move the retainer clip so that the safety keyhole slot is accessible.

Note: The positioning is awkward and the screw can be easily dropped.

6. Push safety cable ball end out from counterweight groove.
7. Pull safety cable ball end through top of column.
8. Remove old safety cable from column.
9. Push new safety cable ball end through top of column over top of upper pulley and then into counterweight keyhole slot.
10. Place cable retainer clip back in position and tighten/insert screws.
11. Thread new safety cable through back of carriage.
12. Raise vertical arm to comfortable working height.
13. Apply Loctite 242 to the entire length of threads on the cable stud. Install jam nut on cable stud.
14. Install cable stud through carriage horizontal strut and install holding nut.
15. Adjust tension of the safety cable until its tension is in accordance with Section 5−3−4 (may need to also readjust main cable tension as well). Tighten safety and main cable holding nuts, then safety cable jam nut, and finally the main cable jam nut.

Note: Do not allow cables to twist while setting tension. Ensure the Loctite 242 was properly used on both the main and the safety cable studs, and that both jam nuts are tight.

5-3-3 Reassemble Unit

1. Move horizontal arm through full range of motion, ensuring that it moves smoothly with equal force throughout its range. Ensure that both cables run smoothly through upper pulley.
2. Replace carriage access plate and four binding head screws.
3. Install column cap.

5-3-4 Vertical Column Cable Tension

Tension in the vertical column cables can be measured two ways: when the column is horizontal (as when replacing the counterweight) or vertical (as when replacing the main and safety cables). Table 5−1 lists the tension values required for the different attitudes.

TABLE 5−1
VERTICAL COLUMN TENSION

COLUMN ATTITUDE	CABLE TENSION		
	MAIN	SAFETY	FOLLOWER
HORIZONTAL	60 LB (27 KG)	5−10 LB (2.3−4.5 KG)	N/A
VERTICAL	N/A	45 − 50 LB (20.4 − 22.7 KG))	10−15 LB (4.5−6.8 KG)
N/A − Not applicable; value not measured			

5-3-5 Remove Follower Cable

If replacement of follower cable is required, all three cables should be replaced to ensure that the periodic maintenance time interval specified for replacement of the cables remains the same.

Note: Use this procedure for follower cable service, or in the event the procedure in Section 5-3 cannot be successfully performed.

1. Remove vertical column from unit. Refer to Section 5−1. Vertical Column removal is necessary in order to replace a follower cable.
2. Remove cover plate form the carriage assembly by removing four binding head screws holding it in place. See Illustration 5−5.

ILLUSTRATION 5−5
CABLE REPLACEMENT

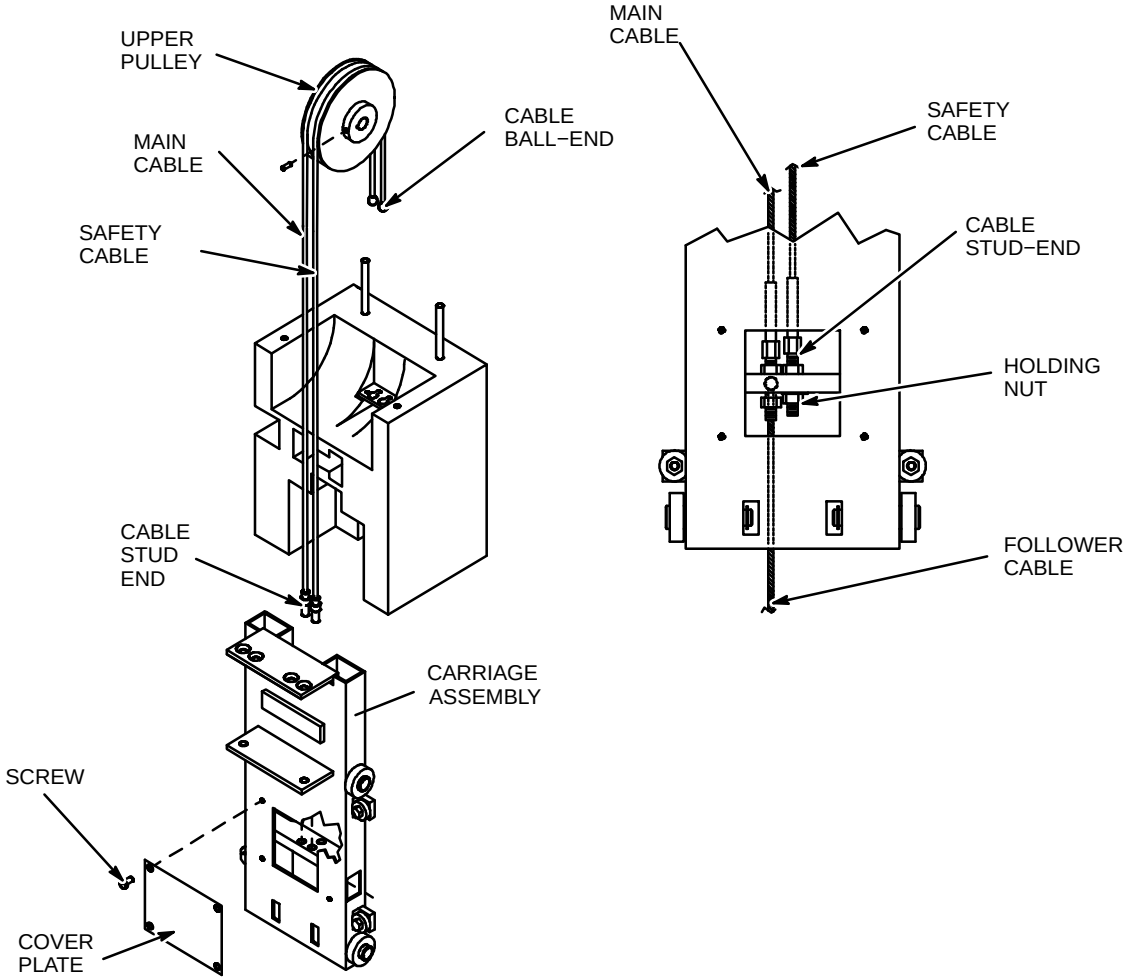

3. Move carriage near to bottom of column. This also brings counterweight to top of column where it can be removed.
4. Loosen locking nuts on top of stud ends of main and safety cables.
5. Remove holding nuts on bottom of stud ends of main and safety cables.
6. Remove cable studs from carriage cable mounting strut.
7. Push ball end of follower cable out of slot in carriage cable mounting strut.
8. Move carriage toward top of column until ball end of follower cable is exposed. Move ball end of cable to bottom of column.
9. Remove follower cable from lower pulley and leave inside bottom of column.
10. Remove pulley and brake assembly. Refer to Section 5−4.
11. Remove counterweight from top end of column. Refer to Section 5−5.

Note: At this point all three cables are detached from the counterweight and can be removed from the vertical column assembly.

12. Remove main, safety and follower cables.

5-3-6 Install Follower Cable

1. Install counterweight assembly. Refer to Section 5-5.
2. Install upper pulley and brake assembly. Refer to Section 5-4-4.
3. Reach in the bottom of the column, retrieve the follower cable (see Illustration 5−5) and position it around the lower pulley.
4. Place the ball end of the follower cable in the small square cut−out in the column.
5. Align the carriage cable mounting strut over the base end of the follower cable.
6. Place ball end of follower cable in slot on carriage cable mounting strut.
7. Apply Loctite 242 to the entire length of the follower cable stud threads.
8. Replace top locking nuts on stud ends of main and safety cables.
9. Insert main safety cable studs into carriage cable mounting strut holes.
10. Replace holding nuts on bottom of stud ends of main and safety cables. Do not tighten at this time.
11. Make certain all the cables are still in their pulley grooves. (Follower cable is on right side as you look at it.)
12. Tighten the main cable until there is no slack in the follower cable.
13. Set follower cable to tension value found in Section 5-3-4. Apply Loctite 242 and tighten main cable jam nut.
14. Re−apply Loctite 242 if necessary and tighten jam nuts.
15. Check that the carriage moves freely up and down the column.
16. Replace cover plate on the carriage assembly and secure with four binding head screws. See Illustration 5−5.
17. Move carriage to top of column. This moves counterweight to bottom of column.
18. Install vertical column. Refer to Section 5-2.

5-4 Upper Brake, Pulley, and Bearings

5-4-1 Disconnect Brake

1. Remove the vertical column. Refer to Section 5-1.
2. Tag either the main or safety cable. This will eliminate confusion when securing them in their correct positions on the carriage mounting strut.
3. Detach the main and safety cables from the carriage cable mounting strut. Refer to Section 5-3.
4. Remove two screws in the bottom of terminal box located on back of vertical column and lift off cover.
5. Disconnect upper brake cable leads from terminal block. (It is important to tag and record terminal points, otherwise there is a possibility of blowing internal diode in brake if leads are improperly installed.)
6. Remove brake cable from terminal box and channel on back of column.

5-4-2 Remove Upper Pulley and Brake

1. Remove capscrews securing pulley and brake assembly to top of column. See Illustration 5−6.
2. Remove Heyco bushing from column where brake cable enters pulley and brake assembly. Bushing extends into pulley and brake casting.

ILLUSTRATION 5−6
UPPER PULLEY AND BRAKE ASSEMBLY

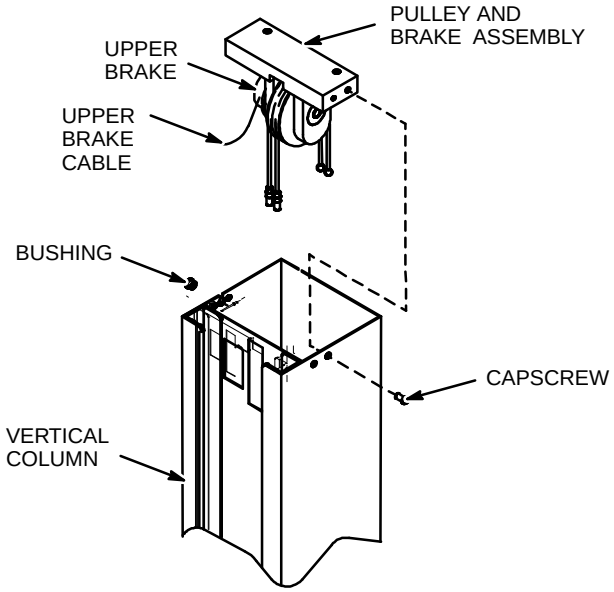

3. Slowly withdraw pulley and brake assembly from top of column while sliding the brake cable through slot in top of column. These must be done together or the brake cable will be severed.
4. Pull main and safety cables from the column.
5. Remove the nuts from the stud ends of both cables.
6. Remove each cable from the pulley and brake assembly by first lifting it from its pulley groove, moving it to the side of the pulley and then pulling it free. The ball ends of these cables still remain attached to counterweight.
7. Remove the pulley and brake assembly.

5-4-3 Replace Upper Pulley and Bearings

1. Remove upper pulley and brake. Refer to Sections 5-4-1 and 5-4-2.
2. Place a tag on either the main cable or safety cable. This will aid in re-installing them later in their correct positions.
3. Remove pulley set screws. See Illustration 5−7.

ILLUSTRATION 5−7
UPPER BRAKE AND PULLEY

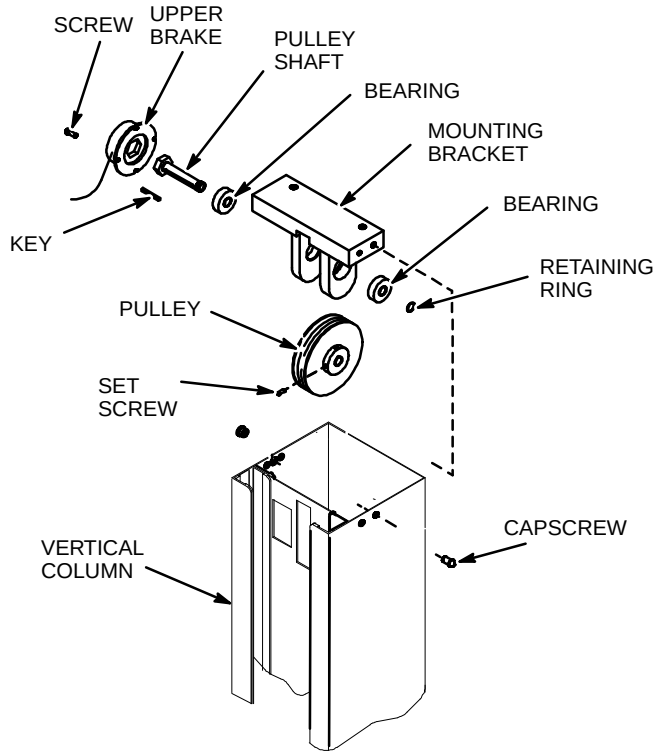

4. Remove retaining ring from end of pulley shaft.
5. Remove pulley shaft bearing, key, pulley and cables from mounting bracket.
6. Remove bearing from mounting bracket.
7. Place bearing on pulley shaft and insert key.
8. Place pulley in position in the mounting bracket.
9. Insert pulley shaft, bearing and key into mounting bracket and through pulley.
10. Place bearing in mounting bracket on end of pulley shaft.
11. Place retaining ring on end of pulley shaft.
12. Replace pulley set screws and secure firmly.

5-4-4 Install Upper Pulley, Bearings and Brake

1. Place pulley and brake assembly near upper end of vertical column. See Illustration 5−6.
2. Remove the nuts from the stud ends of main and safety cables.
3. Insert each cable into pulley and brake assembly along the side of the pulley then lift it into its assigned pulley groove. The ball ends of these cables are attached to the counterweight.
4. Insert main and safety cables into the column through slot provided.
5. Check that the brake cable is exiting pulley and brake assembly through hole in casting.
6. Replace pulley and brake assembly in top of column while sliding the brake cable through slot in top of column. This must be done together or the brake cable may be damaged.
7. Replace the Heyco bushing in column where brake cable passes through column and enters pulley and brake assembly. Bushing extends into pulley and brake casting.

Note: Torque cap screws to 50−70 pound−inches (5.6 to 7.8 N−m).

8. Apply Loctite and replace cap screws securing pulley and brake assembly to top of column.

5-4-5 Connect Brake

1. Insert brake cable through top of channel on back of column and down into terminal box.
2. Connect upper brake cable leads to terminal block. See Illustration 5−2.
3. Replace terminal box cover located on back of vertical column and secure with two screws.
4. Install main and safety cables on the carriage cable mounting strut. Refer to Section 5−2.
5. Install vertical column. Refer to Section 5-4.

5-4-6 Remove Upper Pulley, Bearings and Brake (Alternate)

Note: This procedure can be used to replace the brake without removing the vertical column

1. Remove horizontal arm. Refer to Section 4-5. It is not necessary to remove yoke from arm.
2. Disconnect upper brake. Refer to Section 5-4-1.
3. Disconnect main and safety cables from carriage. Refer to Section 5-6.
4. Move carriage to bottom of column.
5. Remove four capscrews securing pulley and brake assembly to top of column.
6. Remove the Heyco bushing in column where brake cable passes through column and enters pulley and brake assembly. Bushing extends into pulley and brake casting.
7. Remove pulley and brake assembly from top of column while sliding the brake cable through slot in top of column. This must be done together or the brake cable may be damaged.
8. Remove screws holding upper brake to the mounting bracket.

5-4-7 Install Upper Pulley, Bearings and Brake (Alternate)

Note: This procedure can be used in conjunction with Section 5-4-6.

1. Insert screws holding upper brake to the pulley and brake assembly casting and secure in place.
2. Check that the brake cable is exiting pulley and brake assembly through hole in casting.
3. Replace pulley and brake assembly in top of column while sliding the brake cable through slot in top of column. This must be done together or the brake cable may be damaged.
4. Replace the Heyco bushing in column where brake cable passes through column and enters pulley and brake assembly. Bushing extends into pulley and brake casting.

Note: Torque cap screws to 50−70 pound−inches (5.6 to 7.8 N−m).

5. Apply Loctite and replace capscrews securing pulley and brake assembly to top of column.
6. Connect brake. Refer to Section 5-4-5.
7. Apply Loctite 242 to the entire thread length of each cable stud.
8. Move carriage to top of column and insert main and safety cables in carriage cable mounting strut. See Illustration 5−8.

ILLUSTRATION 5−8
CARRIAGE ASSEMBLY

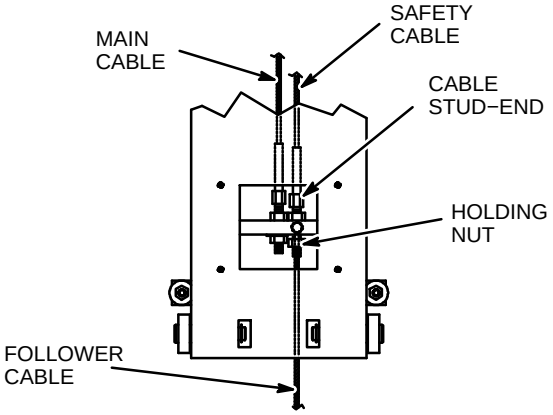

9. Tighten the main and safety cable stud end nuts and lock in place with the holding nuts.
10. Set cable tension in accordance with Section 5-3-4. Tighten cable jam nuts.
11. Replace cover plate on the carriage assembly and secure with four binding head screws. See Illustration 5−5.
12. Replace horizontal arm with yoke. Refer to Section 4-6.

5-5 Counterweight

5-5-1 Remove Counterweight

1. Remove vertical column. Refer to Section 5-1.
2. Remove the main, safety and follower cables. Refer to Section 5-3.
3. Remove upper pulley and brake assembly. Refer to Section 5-4.

⚠ WARNING

PERSONAL INJURY! THE COUNTERWEIGHT WEIGHS APPROXIMATELY 100 POUNDS (45 KG). USE THE PROPER SAFETY PRECAUTIONS WHEN HANDLING THE COUNTERWEIGHTS.

4. Slide counterweight from vertical column.
5. Remove top cable retainer clip from counterweight assembly by removing two slotted hex washer head screws. See Illustration 5−9.

ILLUSTRATION 5−9
COUNTERWEIGHT

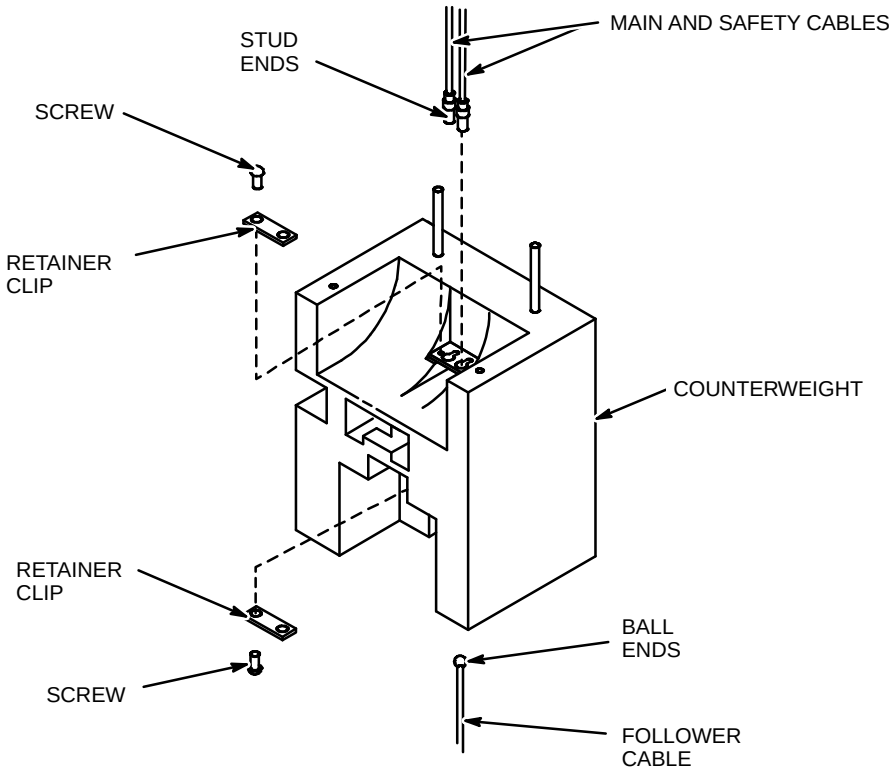

6. Remove main and safety cables from counterweight assembly by dislodging ball ends of cables from retaining notch in counterweight.
7. Remove bottom follower cable retainer clip from counterweight assembly by removing two slotted hex washer head capscrews.
8. Remove follower cable form counterweight assembly by dislodging ball end of cable from retaining notch in counterweight.

5-5-2 Install Counterweight

1. Replace main and safety cables in counterweight assembly by inserting ball ends of cables into retaining notch in top of counterweight. See Illustration 5−9.
2. Replace cable retainer clip in top of counterweight assembly and secure with two slotted hex washer capscrews.
3. Place follower cable ball end into retaining notch in bottom of counterweight. The follower cable must be installed on the right side to function properly.
4. Replace follower cable retainer clip in bottom of counterweight assembly and secure with two slotted hex washer head capscrews.
5. Slide follower cable down inside of vertical column as far as possible.
6. Slide counterweight assembly into vertical column.
7. Check counterweight balancing. Refer to Section 5-5-3.

5-5-3 Counterweight Balancing

Note: The column assembly trim cover must be removed from top of column assembly as shown in Section 5-1.

1. Secure the collimator hand switch closed with a ty-wrap or piece of tape to energize the vertical column brake (as well as all other brakes and latch solenoid).
2. With all hardware in place, check the force required to move the tube/arm assembly upward and downward. If the force needed to move it up is equal to the force needed to move it down, the vertical column is balanced. Proceed to Step 5.
3. If the vertical moving forces are unequal, eight oz. (0.23 kg) counterweights (part number 46−279784P1) should be added or removed (approximately four are installed at the factory).
   a. Move the tube/arm to its lowest possible position. This will raise the counterpoise mass and counterweight to the top of the vertical column where the counterweight can be accessed.
   b. Loosen and remove the two locknuts and washers that hold the counterweights to the counterpoise.
   c. Add or remove counterweights as required,
   d. Replace the washers and locknuts, and tighten locknuts.
4. Repeat Step 2. If the moving forces are equal, proceed to Step 5. If they are still unequal, repeat Step 3.
5. Replace trim cover on top of vertical column and secure with two hex socket button head capscrews.

5-6 Carriage Assembly

5-6-1 Remove Carriage

1. Remove upper pulley and brake assembly. Refer to Section 5-4.
2. Remove follower cable end from carriage strut by loosening its holding nut. See Illustration 5−10.
3. Slide carriage to top of column and remove it.

ILLUSTRATION 5−10
CARRIAGE ASSEMBLY

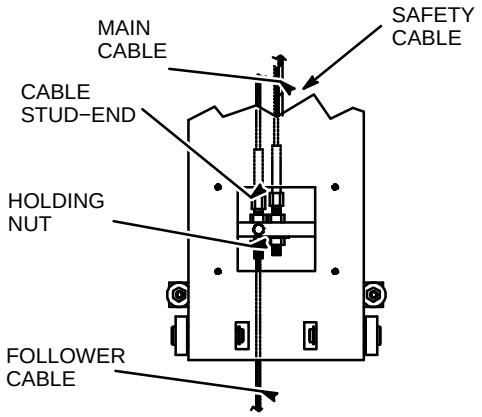

5-6-2 Install Carriage

1. Slide carriage assembly into top of column. Check that horizontal arm mounting plate is at top of carriage.
2. Install pulley and brake assembly. Refer to Section 5-4-4.
3. Apply Loctite 242 to the entire length of the follower cable stud threads.
4. Place follower cable end into carriage strut and secure in place by tightening its holding nut. See Illustration 5−10.

5-6-3 Remove Carriage Bearings

1. Remove carriage assembly. Refer to Section 5-6-1.
2. Remove four hex head shoulder bolts securing four forward facing bearings to side flanges on carriage. See Illustration 5−11.
3. Remove carriage side facing bearing shoulder bolts and bearings from carriage.

ILLUSTRATION 5−11
CARRIAGE BEARINGS

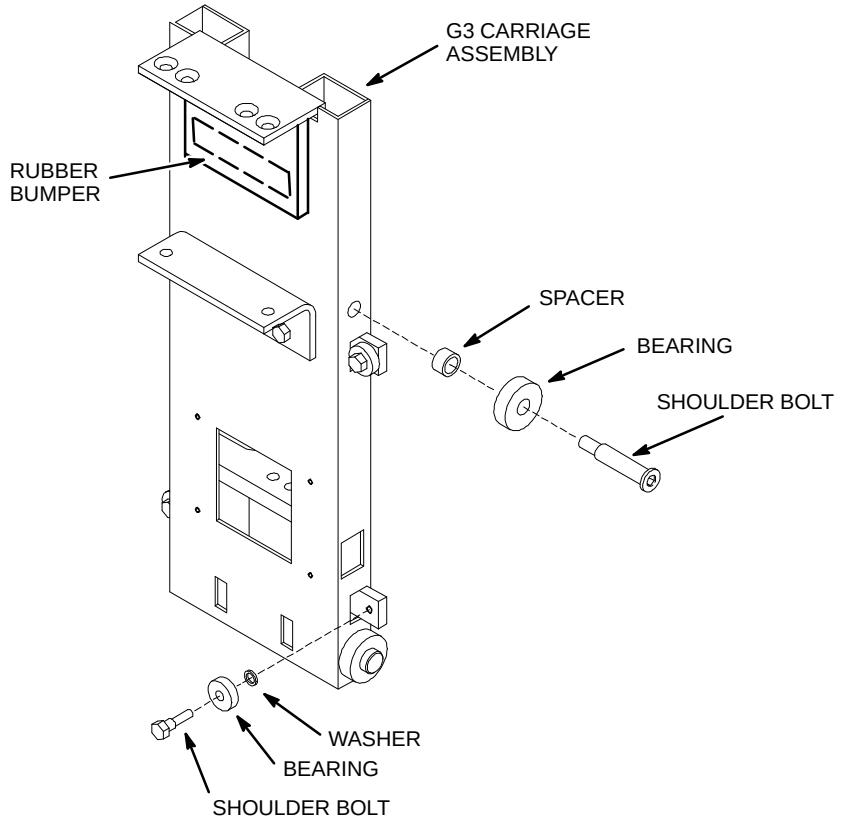

5-6-4 Install Carriage Bearings

1. Lubricate bearings if necessary.
2. Attach four forward facing bearings to carriage mounting flanges with hex head shoulder bolts. See Illustration 5−11. Apply Loctite and torque to 40−60 pound−inches (4.5 to 6.7 N−m)
3. Install side facing bearings at mounting locations on each side of carriage with shoulder bolts.
4. Install carriage assembly in vertical column assembly. Refer to Section 5-6-2.

5-7 Lower Brake Removal

1. Remove vertical column. Refer to Section 5-1.
2. Remove retaining ring from bottom of column base shaft. See Illustration 5−12.

ILLUSTRATION 5−12
LOWER BRAKE AND BEARINGS

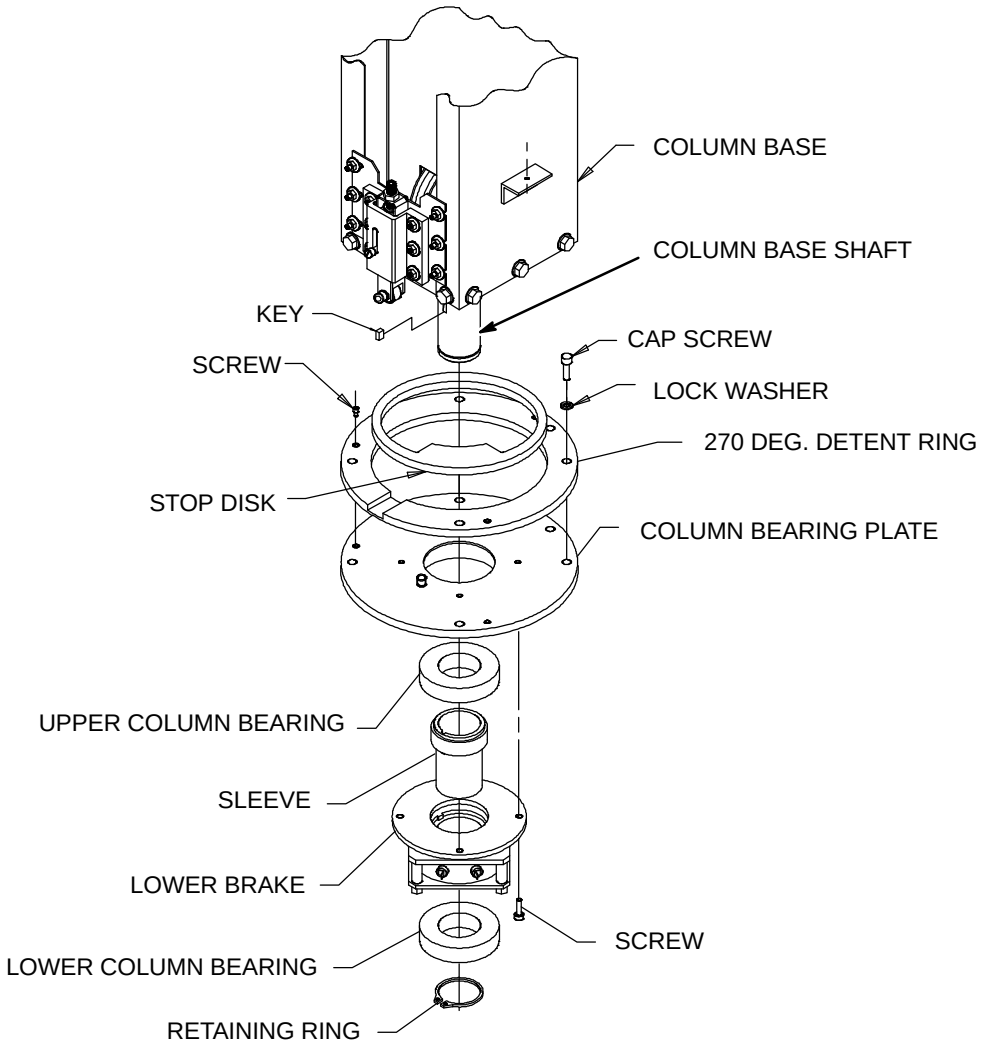

3. Pull lower column bearing from column base shaft.
4. Remove screws and washers securing lower brake to column bearing plate.
5. Remove lower brake from column base shaft.

5-8 Lower Bearings and Baseplate Removal

1. Remove vertical column. Refer to Section 5-1.
2. Remove lower brake. Refer to Section 5-7.
3. Remove sleeve and key from column base shaft.
4. Remove upper column bearing and column bearing plate from column base shaft.

Note: It is not normally necessary to take the column bearing plate apart, but the stop disk can come out of its position in the detent ring.

5-9 Lower Brake and Bearings Installation

Note: Install stop disk in column bearing plate if it has come out.

1. Install upper column bearing in column bearing plate. See Illustration 5−12.
2. Place column bearing plate on column base shaft. Ensure that column bearing plate sits flat on bottom of column.
3. Install sleeve and key on column base shaft.
4. Place lower brake on column base shaft.
5. Secure lower brake to bearing plate with screws and washers. Torque to 40−60 pound−inches (4.5 to 6.7 N−m).
6. Slide lower bearing on column base shaft and secure with retaining ring.
7. Install vertical column assembly. Refer to Section 5-2.

5-10 Column Base Removal

1. Remove vertical column assembly. Refer to Section 5-1.
2. Remove follower cable. Refer to Section 5-3-5.
3. Remove lower brake and bearings. Refer to Section 5-9.
4. Remove hex head bolt and flat washers securing column base assembly to vertical column. See Illustration 5−13.

ILLUSTRATION 5−13
COLUMN BASE

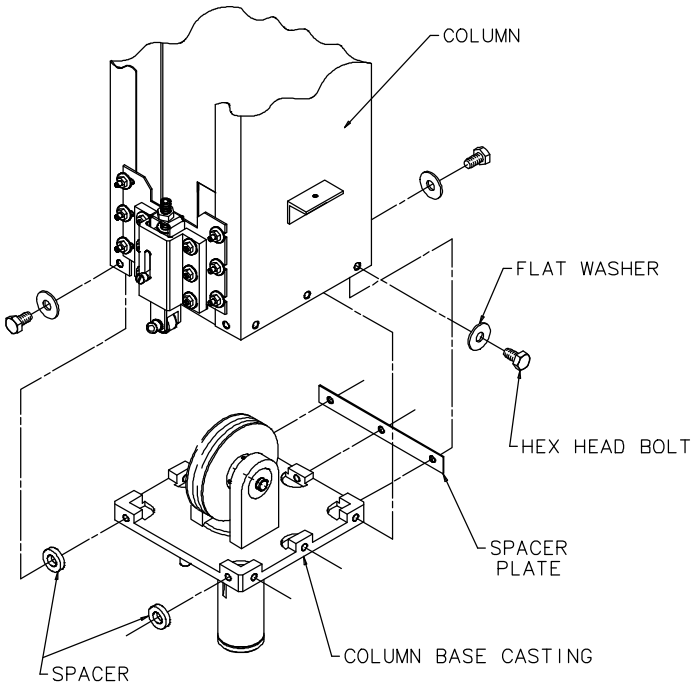

5. Pull column base assembly and spacers from vertical column.

5-11 Column Base Installation

1. Insert column base assembly into vertical column. Line up holes with those in vertical column. See Illustration 5−13.
2. Position spacers so that holes line up with column base and column.
3. Apply Loctite to the hex head bolts. Secure column base assembly to vertical column with bolts and flat washers. Torque bolts to 30−35 pound−feet (41 to 47 N−m).
4. Install lower brake and bearings. Refer to Section 5-9.
5. Install follower cable. Refer to Section 5-3-6.
6. Install vertical column assembly. Refer to Section 5-2.

5-12 Lower Pulley and Bearings Removal

1. Remove column base. Refer to Section 5-10.
2. Loosen two set screws on pulley hub. See Illustration 5−14.

ILLUSTRATION 5−14
LOWER PULLEY AND BEARINGS

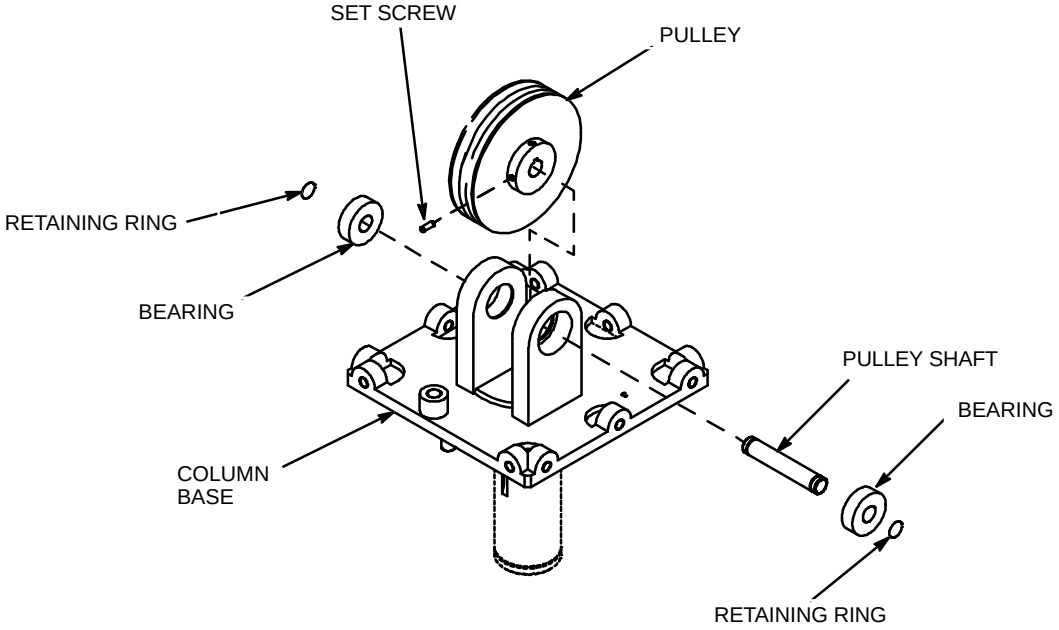

3. Remove external retaining rings from pulley ends of pulley shaft.
4. Pull out shaft and remove pulley.
5. Remove bearings from column base casting.

5-13 Lower Pulley and Bearings Installation

1. Insert bearings in bearing seats in column base casting. See Illustration 5−14.
2. Push pulley shaft through left bearing. Slide pulley on shaft with pulley hub toward right bearing.
3. Insert pulley shaft in right bearing and secure shaft with one external retaining ring in groove on each end of shaft.
4. Tighten two set screws on pulley hub.
5. Install column base. Refer to Section 5-2.

5-14 Column Support Assembly Removal

1. Remove vertical column assembly. Refer to Section 5-1.
2. From beneath the bare assembly, remove capscrews and washers securing column support to bottom of base assembly. See Illustration 5−15.

ILLUSTRATION 5−15
COLUMN SUPPORT ASSEMBLY

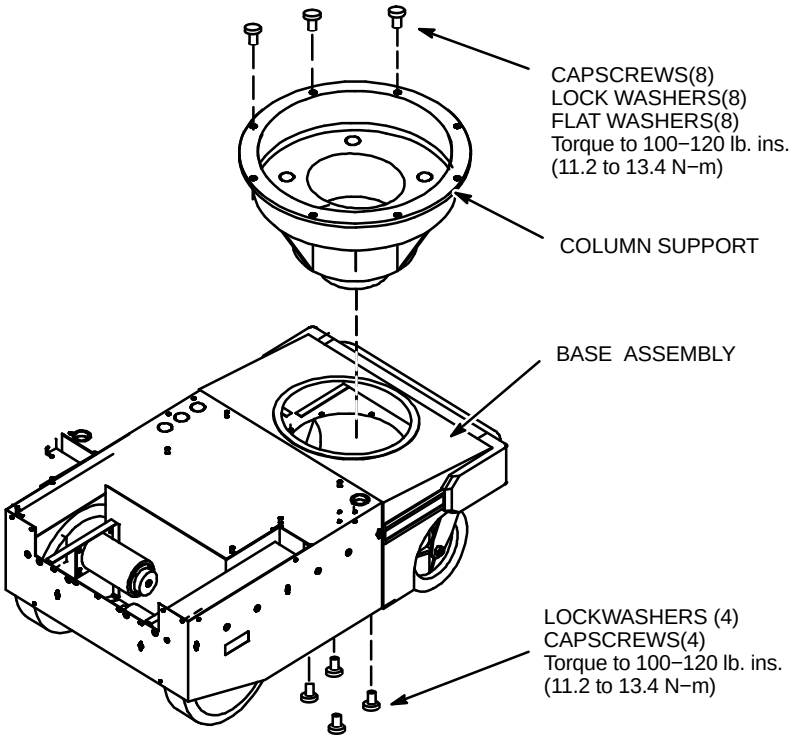

3. Remove hex head capscrews, lockwashers and flat washers securing the column support to the base assembly.
4. Remove column support from base assembly.

5-15 Column Support Assembly Installation

1. Place column support in base assembly. Orient opening in side of column support so it is opposite terminal board in base assembly. Line up mounting holes. See Illustration 5−15.
2. Secure the column support to the base assembly with hex head capscrews, lockwashers and flat washers. Torque to 100−120 pound−inches (11.2 to 13.4 N−m).
3. Secure bottom of column support to bottom of front tongue in base assembly with cap screws and washers. Torque to 100−120 pound−inches (11.2 to 13.4 N−m).
4. Install vertical column assembly. Refer to Section 5-2.

SECTION 6 − SERVICING THE CASSETTE DRAWER, COVERS, HORIZONTAL ARM LATCH AND HANDSWITCH

This section provides procedures covering the removal and installation of trim covers.

6-1 Cassette Drawer Removal

1. Remove rear cover from unit by removing two screws securing it to base assembly. See Illustration 6−1.
2. Remove five binding head screws and flat washers securing cassette drawer hinge to base assembly.
3. Pull cassette drawer to open position. It is retained by magnetic catch. Lift drawer up and out of base assembly.

ILLUSTRATION 6−1
CASSETTE DRAWER

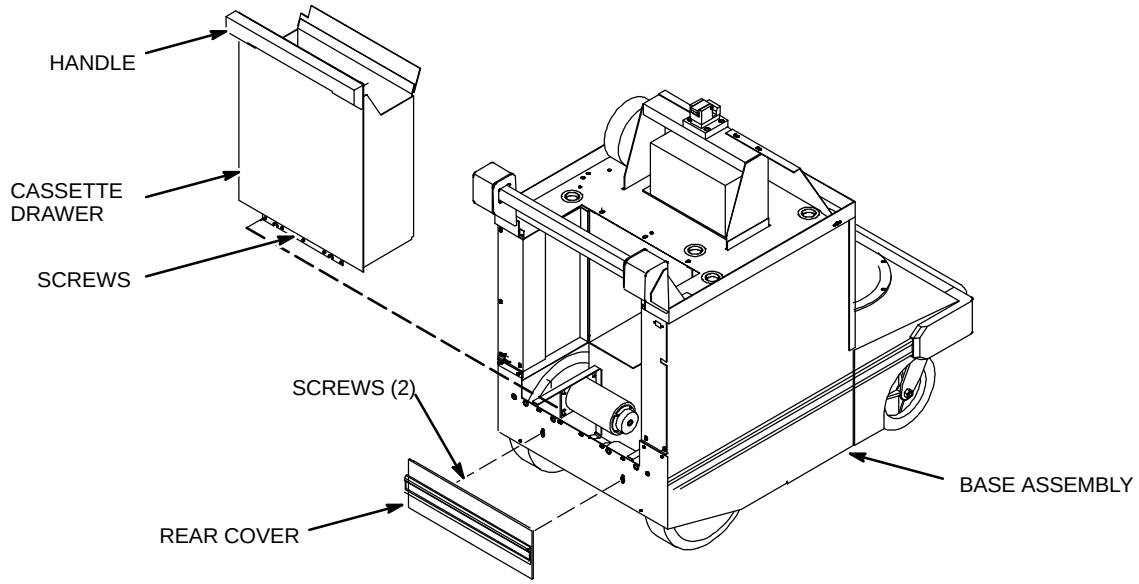

6-2 Cassette Drawer Installation

1. Place cassette drawer in position on base assembly.
2. Attach cassette drawer hinge to base with five binding head screws and flat washers.
3. Install rear cover to base assembly with two screws.
4. Close cassette drawer. Magnetic catch will hold it in its place.

6-3 Cassette Drawer IEC Finger Pinch Label Installation

1. If replacing the cassette drawer, please ensure you have ordered a replacement warning label (part number 5291366) for the drawer handle.
2. Attach the label to the handle of the cassette drawer.

6-4 Side Covers Removal

Note: This procedure covers the removal of both the right and left trim covers.

1. Turn power off by turning circuit breaker OFF.
2. Remove front cover from unit by pulling corners of cover from ball stud retainer sockets on mainframe. See Illustration 6−2.
3. Remove rear cover by removing two screws retaining it on base assembly.
4. Disconnect hand switch on right side trim cover.
5. Remove two 4−40 x 3/8 inch binding head screws and one 6−32 x 1/2 inch black oxide binding head screw holding each cover to base and mainframe assemblies.
6. Pull covers loose from five ball stud retaining sockets and carefully remove from unit.

ILLUSTRATION 6−2
SIDE COVERS

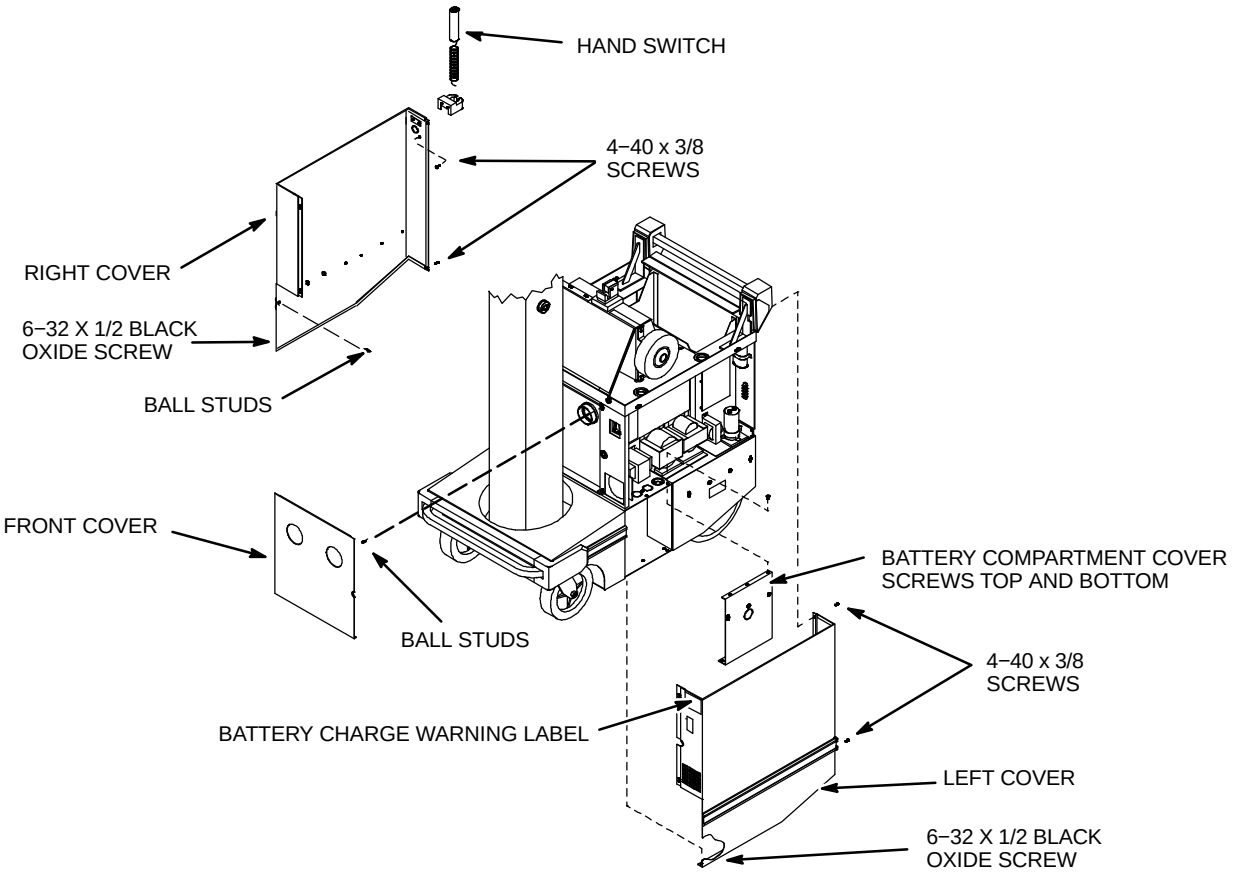

6-5 Side Cover Installation

1. Turn power off by turning circuit breaker OFF.

Note: This procedure covers the installation of both the right and left trim covers.

2. Install side covers by first pressing the five ball studs into retainer sockets on base and mainframe assemblies. See Illustration 6−2.

3. Secure each side cover to base and mainframe assemblies with two 4−40 x 3/8 inch binding head screws and one 6−32 x 1/2 inch black oxide binding head screw.
4. Connect handswitch on right side trim cover.
5. Install rear cover with two screws.
6. Install front cover on unit by pressing ball studs on corners of cover into retainer sockets.

6-6 Battery Charging Warning Label

1. If replacing the side covers, or performing a new installation in a non−English speaking country, please ensure you have ordered a replacement warning label for the side cover:
   > Order 46−279022P1 for English or
   > Order 5407496 for all other languages

Note: If this is a new installation, the label is provided in a kit with the system.

2. Place the label as shown in Illustration 6−2.

6-7 Top Cover Removal

1. Move horizontal arm to top of column.
2. Turn power off by turning circuit breaker OFF.
3. Open cassette drawer, reach up into top cover and rotate two spring latches to release cover from the mainframe.
4. Remove three hex socket capscrews holding collar to horizontal arm latch and lift off collar and spacer beneath it. See Illustration 6−3.

ILLUSTRATION 6−3
TOP COVER

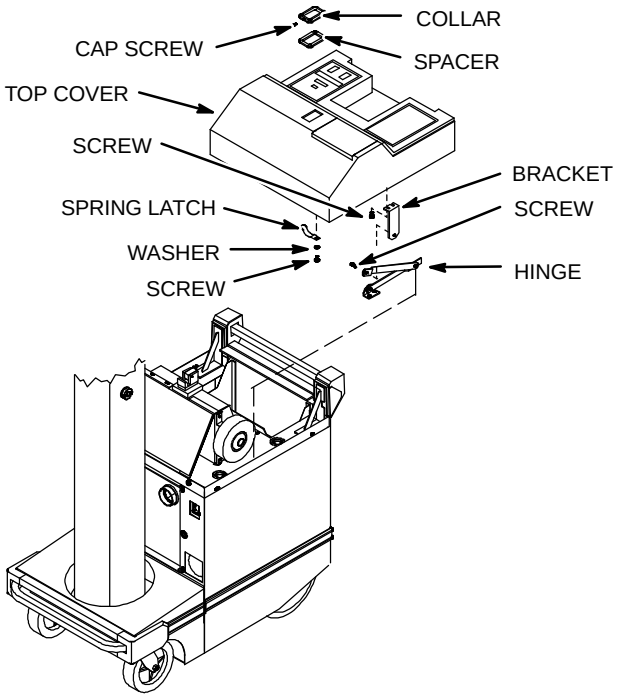

5. Lift top cover straight up until right and left hinges lock in vertical position.

Note: With top cover extended on hinges, the cover can be tilted toward the front or rear of the unit to provide access to either area for servicing. If complete removal of the cover is necessary then continue with steps 5 through 9.

6. Disconnect wires from key switch assembly.
7. Disconnect ribbon cable from display at printed wire board.
8. Remove the shouldered screws holding the right and left hinges to the top cover brackets.
9. Remove the top cover.

6-8 Top Cover Installation

1. Move horizontal arm to top of column.
2. Turn power off by turning circuit breaker OFF.
3. Extend right and left hinges from mainframe to vertical position. See Illustration 6−3.
4. Lift top cover and position brackets on hinges.
5. Secure top cover brackets to right and left hinges with two shouldered screws.
6. Connect ribbon cable from display to printed wire board.
7. Connect wires to key switch assembly.
8. Carefully lower cover into position on top of mainframe.
9. Open cassette drawer, reach up into top cover and rotate two spring latches to lock cover to mainframe.
10. Place spacer and collar on horizontal arm latch and secure collar in place with three hex socket capscrews.

6-9 Top Cover X−ray Warning Label

1. If replacing the top cover, or performing a new installation in a non−English speaking country, please ensure you have ordered a replacement warning label for the top cover (kit part number 5407496).

Note: If this is a new installation, the label is provided in a kit with the system.

2. Place the label on the top cover over the existing English label.
3. For systems installed in Canada, attach the additional X−ray warning label (5407273) to the top cover as shown in Illustration 5−16.

ILLUSTRATION 5−16
APPLY CANADIAN X−RAY WARNING LABEL 5407273

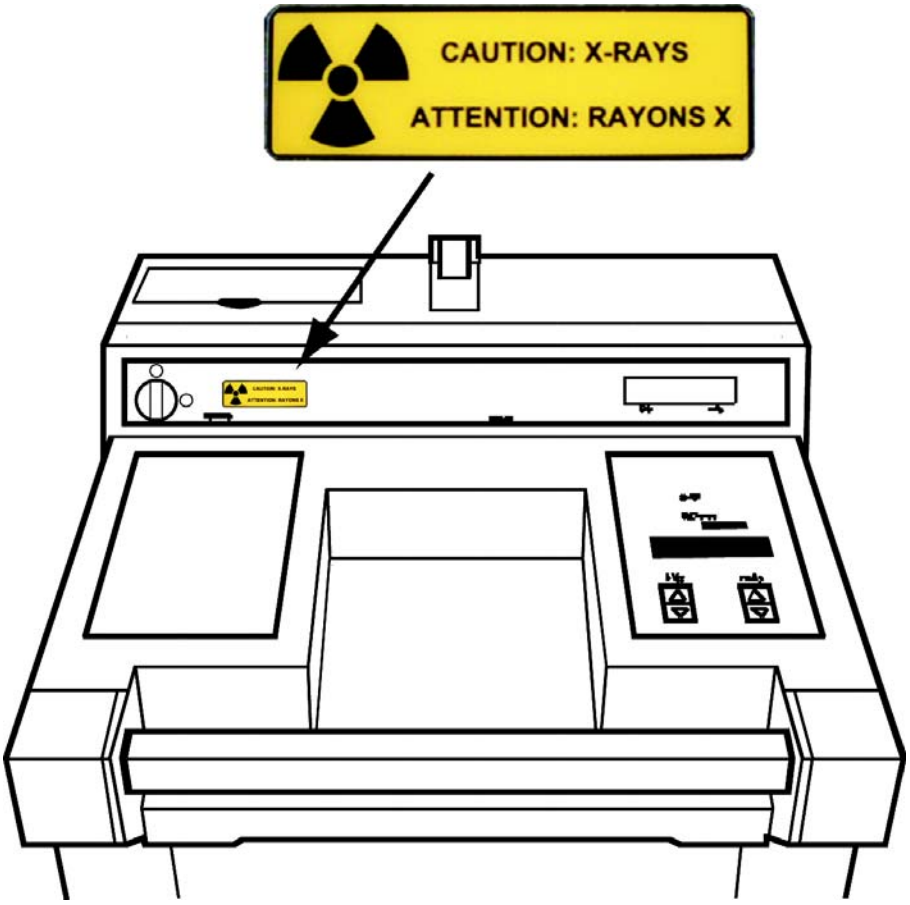

6-10 Remove Latch Assembly and Components (Hall Effect Switch)

1. Move horizontal arm out of the way.
2. Shut power off by turning circuit breaker OFF.
3. Open top cover. Refer to Section 6-7.

Note: If you need more access to terminal strip, you may remove four hex nuts attaching low voltage power supply to mainframe and slide power supply backward out of mainframe housing. See Illustration 6−4.

ILLUSTRATION 6−4
LATCH ASSEMBLY (HALL EFFECT LATCH SWITCH)

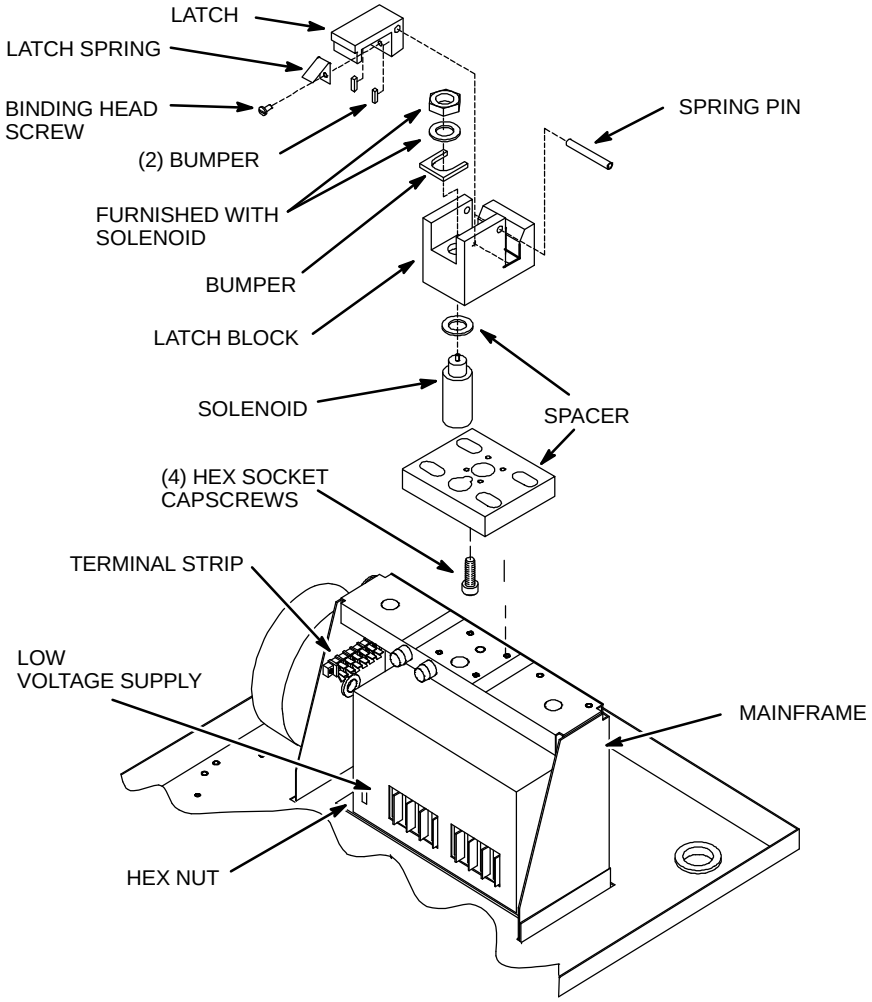

4. Disconnect leads from terminal strip (see Illustration 6−5):
   > Sensor Board: three leads to quick disconnect connectors. (#1, #2 and #3).
   > Solenoid: two leads to terminal strip. Tag and label terminals. Must reconnect properly on #3 & #4 or will blow diode in solenoid.

ILLUSTRATION 6−5
LATCH WIRING

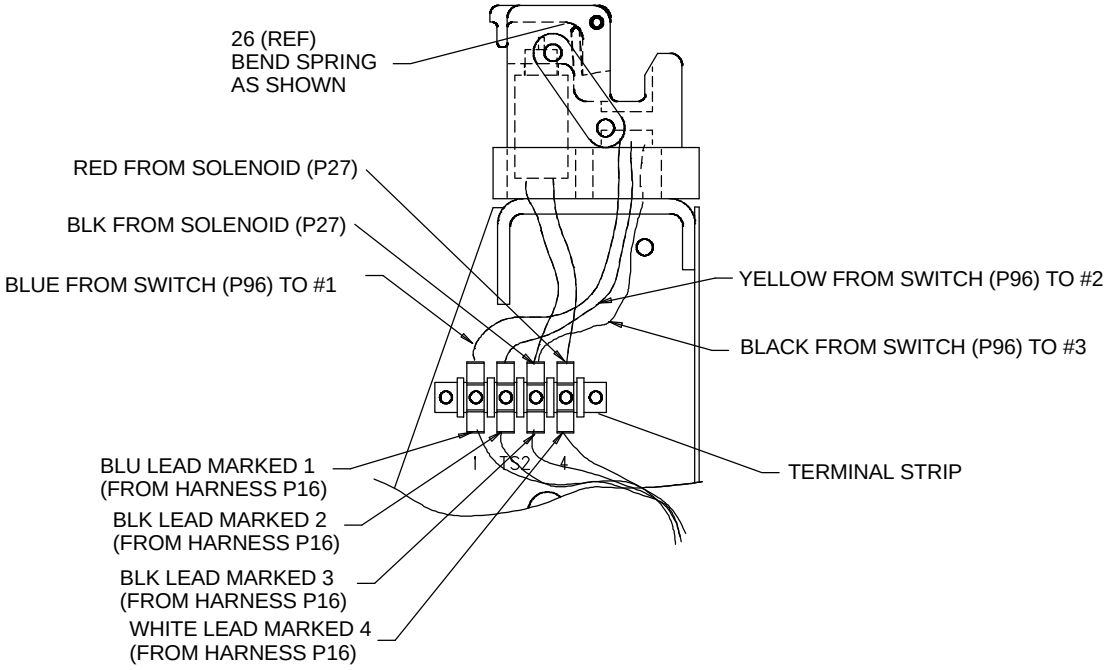

5. Remove latch assembly from mainframe by removing four hex socket head capscrews.
6. Remove latch block from spacer by removing four hex socket head capscrews.
7. Push spring pin out of latch block.
8. Remove latch.
9. Remove latch spring by removing binding head screw.
10. Remove hex nut from top of solenoid.
11. Remove solenoid from recess in latch block.
12. Remove the two flat head screws in side of latch base.

NOTICE

Use care to avoid electrostatic discharge damage to the Hall effect sensor circuit board.

13. Remove the cover and the Hall effect sensor circuit board.

6-11 Install Latch Assembly and Components (Hall Effect Switch)

1. Shut off power by turning circuit breaker OFF.
2. Install solenoid in recess in latch block. See Illustration 6−4.
3. Install hex nut on top of solenoid.

NOTICE

Use care to avoid electrostatic discharge damage to the Hall effect sensor circuit board.

4. Install Hall effect sensor circuit board and cover with two flat head screws.
5. Attach latch spring to latch with binding head screw.
6. Install latch in latch block.
7. Insert spring pin in latch block to retain latch in position.

8. Install latch block on spacer and fasten with four hex socket head capscrews.
9. Install latch assembly on mainframe and fasten with four hex socket head capscrews.
10. Connect leads from latch assembly:
    > Hall Effect Sensor Board: three leads to terminal strip #1, #2 and #3.
    > Solenoid: two leads to terminal strip in accordance with labels on terminals.
11. If you moved low voltage power supply out of the way in Section 6-10, slide power supply onto mainframe housing and fasten with four hex nuts.
12. Close top cover. Refer to Section 6-8.

6-12 Remove And Install Hand Switch Cable

To remove the hand switch cable

1. Disconnect the cable from the connector on the body of the AMX−4+.
2. Remove the 6−32 screw securing the cable clamp, then remove the clamp and star washer.

To install the hand switch cable, perform the above steps in reverse order. Be sure to align the cable to the cover as indicated in Illustration 6−6.

ILLUSTRATION 6−6
HAND SWITCH CABLE

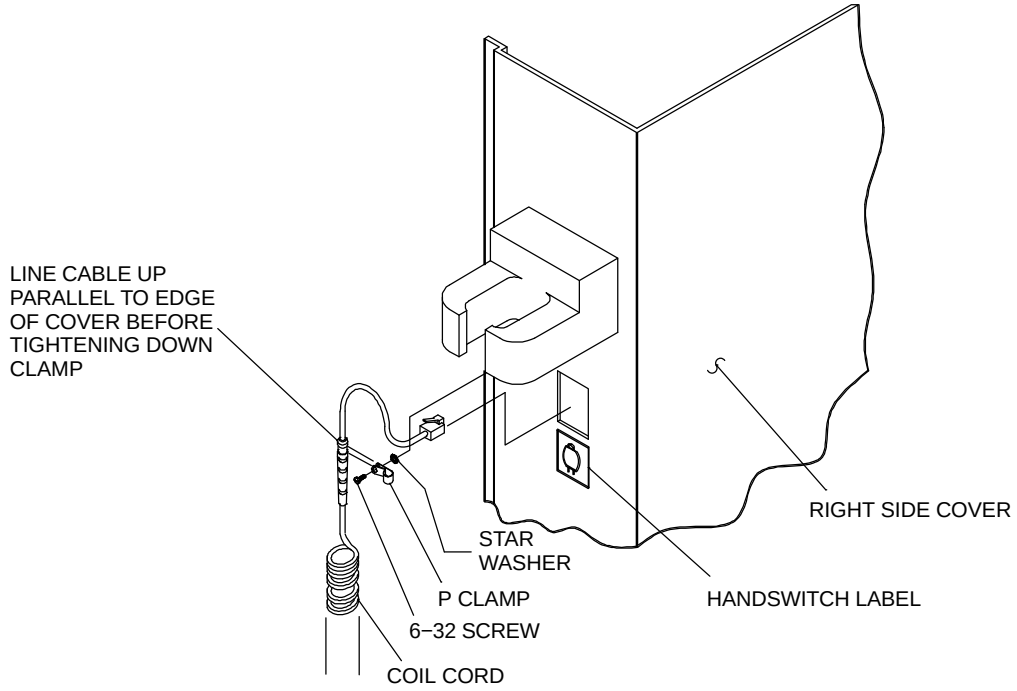

6-13 Install Hand Switch

1. Plug end of coil cord into X−Ray Hand Switch. See Illustration 6−7.
2. Place X−Ray Hand Switch on support bracket.

ILLUSTRATION 6−7
X−RAY HAND SWITCH

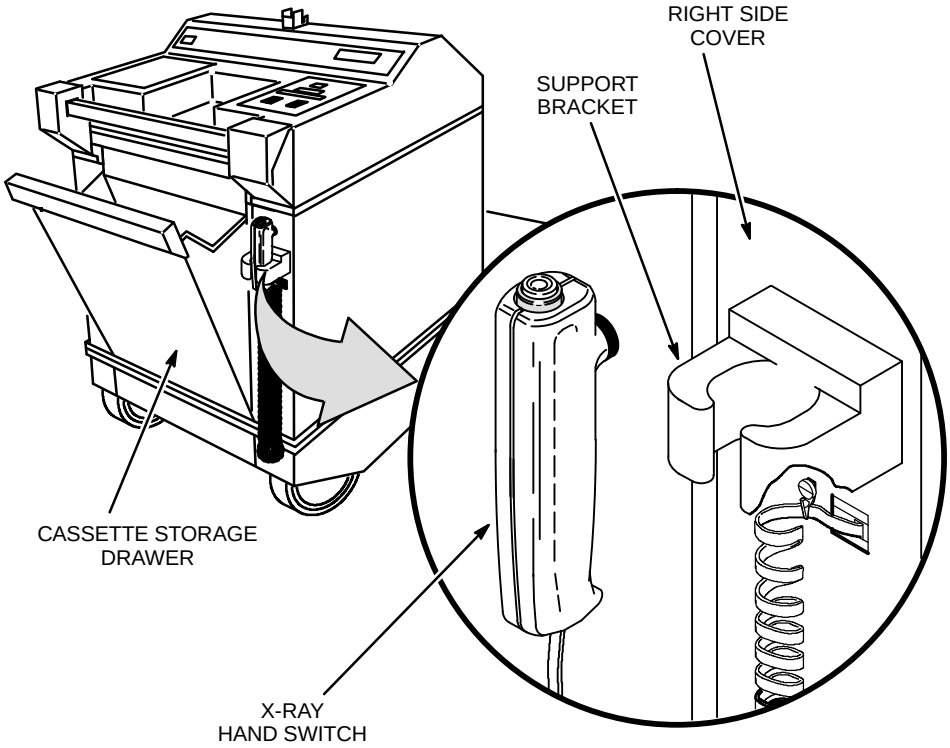

SECTION 7 − SERVICING THE BATTERIES

WARNING

PERSONAL INJURY ! REMOVE ALL JEWELRY AND RINGS WHEN HANDLING THE BATTERIES OR REACHING IN THE BATTERY COMPARTMENT. USE EXTREME CAUTION, HIGH AMPERAGE AND VOLTAGE IS PRESENT. USE INSULATED TOOLS FOR WORKING ON BATTERIES. WEAR SAFETY GLASSES.

During removal:

- References to the right and left sides of battery compartment are relative to the view shown in Illustration 7−1.
- Cable numbers (#s) indicated in Illustration 7−3 and in this instruction are marked on the parts.
- Insulator numbers are shown for convenience in description, but are not marked on the parts.
- There are no Insulators #3 and #7.
- Battery numbers may or may not be marked on batteries. Mark batteries with numbers if desired.
- Disconnect cables only in the order instructed, and only when instructed.
- Don't remove paper backing from any insulating separator pad.

Note: Some battery cable leads may not have boots as referred to in the following procedure.

7-1 Remove Battery Cover

1. Place the unit on a level floor. Extend the horizontal arm and rotate it to the front end (vertical column end) of the unit. See Illustration 7−1.

Note: Distribution of weight is necessary to remove the battery compartment cover.

ILLUSTRATION 7−1
BATTERY COMPARTMENT ACCESS

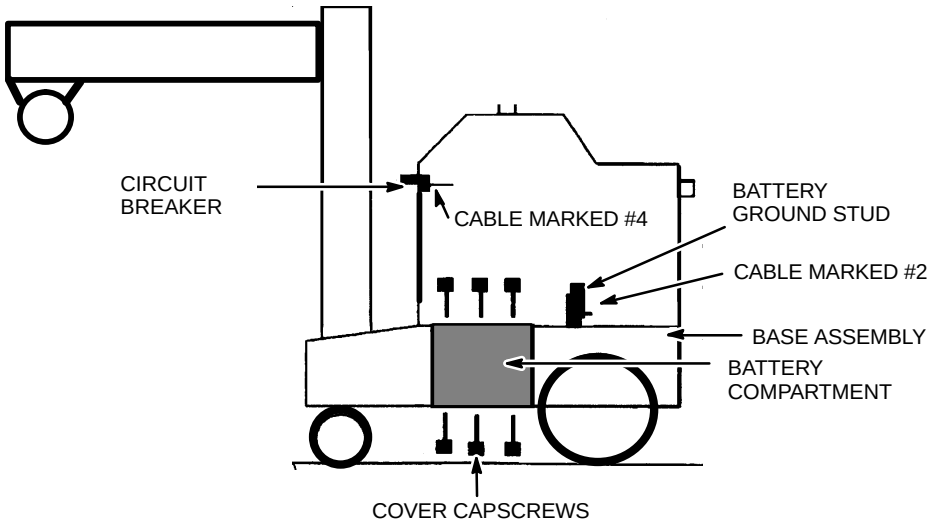

2. Verify that AMX key switch is OFF, circuit breaker is OFF, and charger cord is unplugged.
3. Remove battery ground cable marked #2 from the ground stud. Tape to ensure it does not short. SEPARATE IT FROM ALL OTHER CABLES.

Note: All battery lead connectors must be insulated to prevent electrical contact with the frame or other battery terminals.

4. Tape cable marked #5 separately from ALL other cables.
5. Remove all remaining cables from ground stud. See Illustration 7−1. Tape each cable separately. Keep ALL cables separate.
6. Remove battery lead cable marked #4 from terminal on Circuit Breaker in AMX1 A3 Module. Be certain boot covers the connector and it cannot short out. Tape connector to ensure it will not short.
7. Remove battery compartment cover capscrews and cover.
8. Remove insulator board from compartment entrance.

7-2 Disconnect Battery Sense Harness (If Required)

1. If unit has a battery sense harness, disconnect harness from J11 of the battery test terminal strip. See Illustration 7−2.
2. Disconnect sense leads from J9 and J10 on left hand side of the battery test terminal strip.

ILLUSTRATION 7−2
SENSE LEADS ON BATTERY TEST TERMINAL STRIP (46−321370G1)

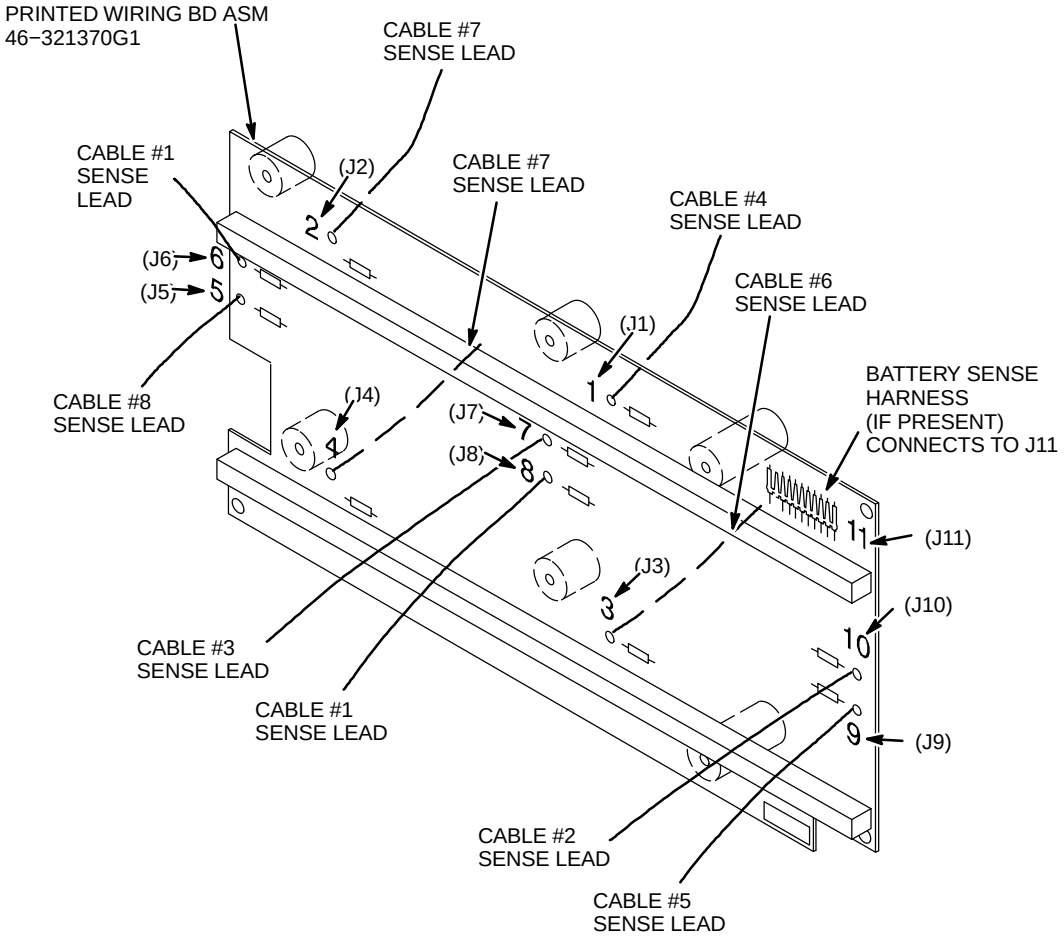

7-3 Disconnect and Remove Batteries

1. Disconnect Cable #2 from Battery #9 (−) and slide boot over cable terminal. See Illustration 7−3.

2. Disconnect Cable #5 from Battery #9 (+), and slide boot over cable terminal.
3. Remove Battery #9, Insulator #8, and Insulator #1 in front of Batteries #7 and #8.
4. Disconnect sense leads from J7 and J8 on left side of battery test terminal strip.
5. Disconnect Cable #3 from Battery #7 (+) and slide boot over cable terminal.
6. Disconnect Cable #5 from Battery #8 (−) and slide boot over cable terminal.
7. Disconnect one of the Cable #1s from Battery #7 (−) and Battery #8 (+), and slide a boot over each cable terminal.
8. Remove Batteries #7 and #8 and the separator pad between them.
9. Remove the remaining Insulator #1.

ILLUSTRATION 7−3
BATTERY CONNECTIONS

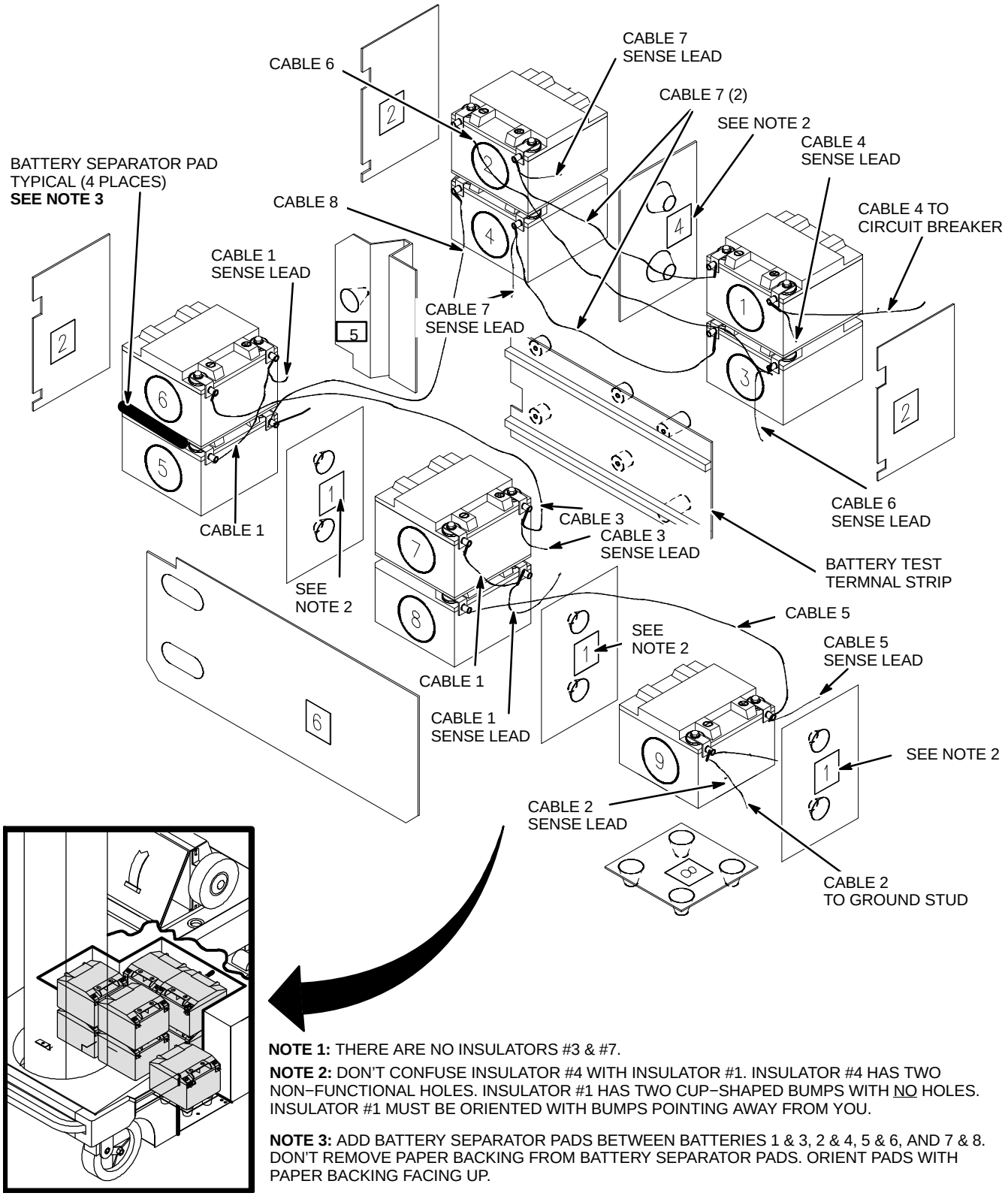

NOTE 1: THERE ARE NO INSULATORS #3 & #7.

NOTE 2: DON'T CONFUSE INSULATOR #4 WITH INSULATOR #1. INSULATOR #4 HAS TWO NON−FUNCTIONAL HOLES. INSULATOR #1 HAS TWO CUP−SHAPED BUMPS WITH NO HOLES. INSULATOR #1 MUST BE ORIENTED WITH BUMPS POINTING AWAY FROM YOU.

NOTE 3: ADD BATTERY SEPARATOR PADS BETWEEN BATTERIES 1 & 3, 2 & 4, 5 & 6, AND 7 & 8. DON'T REMOVE PAPER BACKING FROM BATTERY SEPARATOR PADS. ORIENT PADS WITH PAPER BACKING FACING UP.

7-4 Disconnect and Remove Battery Test Terminal Strip

1. Disconnect sense leads from J5 and J6 on left side of battery test terminal strip, and J1, J2, J3 and J4 from right side.
2. Remove battery test terminal strip from battery compartment.

7-5 Continue Battery Disconnection/Removal

1. Disconnect Cable #8 from Battery #5 (+) and slide boot over cable terminal.
2. Disconnect Cable #3 from Battery #6 (−) and slide boot over cable terminal.
3. Disconnect remaining Cable #1 from Battery #6(+) and Battery #5 (−) and slide boot over each cable terminal.
4. Remove Batteries #5 and #6 and the separator pad between them.
5. Remove Insulator #5, #6, and Insulator #2 behind Batteries #5 and #6.
6. Disconnect Cable #4 from Terminal #4 of circuit breaker in AMX1 A3 and slide boot over cable terminal. Disconnect other end of Cable #4 from Battery #1 (+) and slide boot over cable terminal.
7. Disconnect Cable #8 from Battery #4 (−) and slide boot over cable terminal.
8. Disconnect one of the Cable #7s from Battery #1 (−) and Battery #2 (+) and slide a boot over each cable terminal.
9. Disconnect the other Cable #7 from Battery #3 (−) and Battery #4 (+) and slide a boot over each cable terminal.
10. Disconnect Cable #6 from Battery #2 (−) and Battery #3 (+) and slide a boot over each cable terminal.
11. Remove Insulator #4 and the two remaining Insulator #2s.
12. Remove the four remaining batteries and battery separator pads.

7-6 Install Panasonic Batteries with Sense Board 2334738−2

WARNING

PERSONAL INJURY ! REMOVE ALL JEWELRY AND RINGS WHEN HANDLING THE BATTERIES OR REACHING IN THE BATTERY COMPARTMENT. USE EXTREME CAUTION, HIGH AMPERAGE AND VOLTAGE IS PRESENT. USE INSULATED TOOLS FOR WORKING ON BATTERIES.

WARNING

EQUIPMENT DAMAGE!
DO NOT MIX AND MATCH HAWKER AND PANASONIC BATTERIES BECAUSE OF IMPEDANCE DIFFERENCES BETWEEN THE TWO DIFFERENT TYPES OF BATTERIES.

Note: During installation:

- Before starting to install batteries, be sure that the AMX key switch is OFF, that the circuit breaker is OFF, and the charger cord is unplugged.
- Make all battery connections as shown in Illustrations 7−4 and 7−5 using the hardware shown.

- Reference to the right and left sides of battery compartment are relative to the view shown in Illustration 7−1.
- Cable numbers (#s) indicated in Illustration 7−5 and in this instruction are marked on the parts.
- Insulator numbers are shown for convenience in description, but are not marked on the parts.
- There are no Insulators #3 and #7.
- Battery #s are not marked on batteries.
- Be sure that battery compartment top and bottom insulation from the previous set of batteries is in place.
- Connect cables only in the order instructed, and only when instructed.
- Apply 45−50 pound−inches (5.1−5.6 N−m) torque to ALL battery connections.
- Place insulation boots over ends of each cable that has a boot.
- Don’t remove paper backing from any insulating separator pad. Orient insulator pads with paper backing facing up.

1. Do not install install terminal plates on each battery. See Illustration 7−4.

WARNING

EQUIPMENT DAMAGE!
DO NOT MIX AND MATCH HAWKER AND PANASONIC BATTERIES BECAUSE OF IMPEDANCE DIFFERENCES BETWEEN THE TWO DIFFERENT TYPES OF BATTERIES.

WARNING

EQUIPMENT DAMAGE!
MAKE SURE TO INSTALL BATTERIES AS PICTURED WITH THE POSTS ON THE BOTTOM. THIS ENSURES THAT THE BATTERY POLARITY IS CORRECT.

2. Position Batteries #2 & #3 (see Illustration 7−5) in the battery compartment stacked one on top of the other, with a battery separator pad between them.

3. Install Label #1 between Battery #2 (−) and Batery #3 (+) and route as shown in Illustration 7−5. Connect Brown sense wire under Lead #1 and connect to Battery #2 (−) as shown.

4. Install Lead #1 to Battery #2 (+) and tighten with Lead pointing UP.

5. Install another Lead #1 to Battery #3 (−) and tighten with Lead pointing DOWN.

WARNING

MAKE SURE LEAD #1 TO BATTERY #2 (+) AND LEAD #1 TO BATTERY #3 (−) DO NOT TOUCH.

ILLUSTRATION 7−4
INSTALLATION OF TERMINALS ON PANASONIC BATTERIES (2278932)

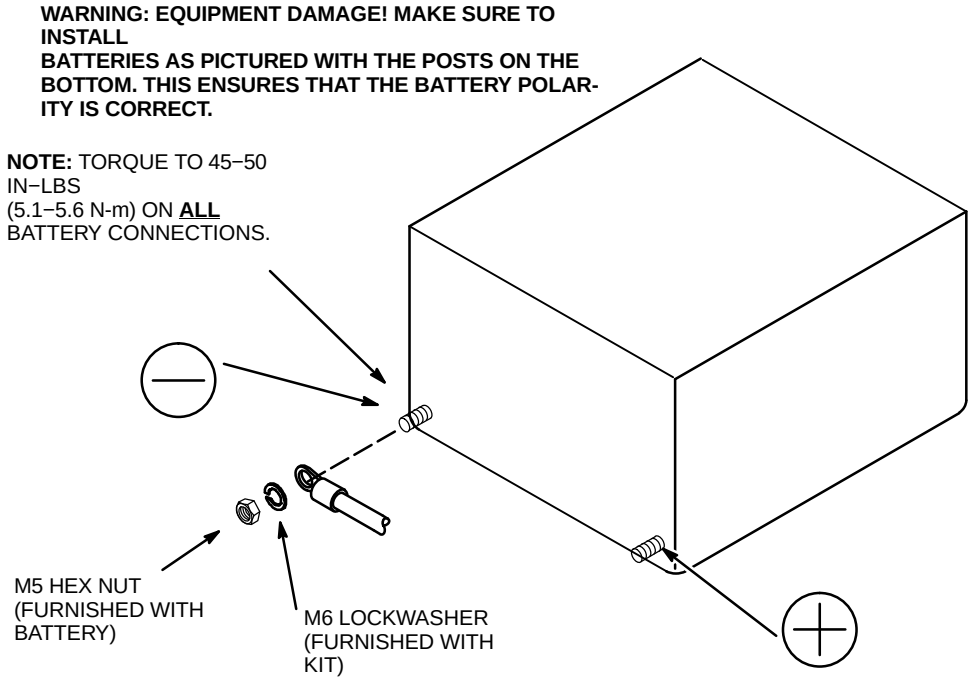

ILLUSTRATION 7−5
INSTALLATION OF BATTERIES IN BATTERY COMPARTMENT WITH SENSE BOARD 2334738−2

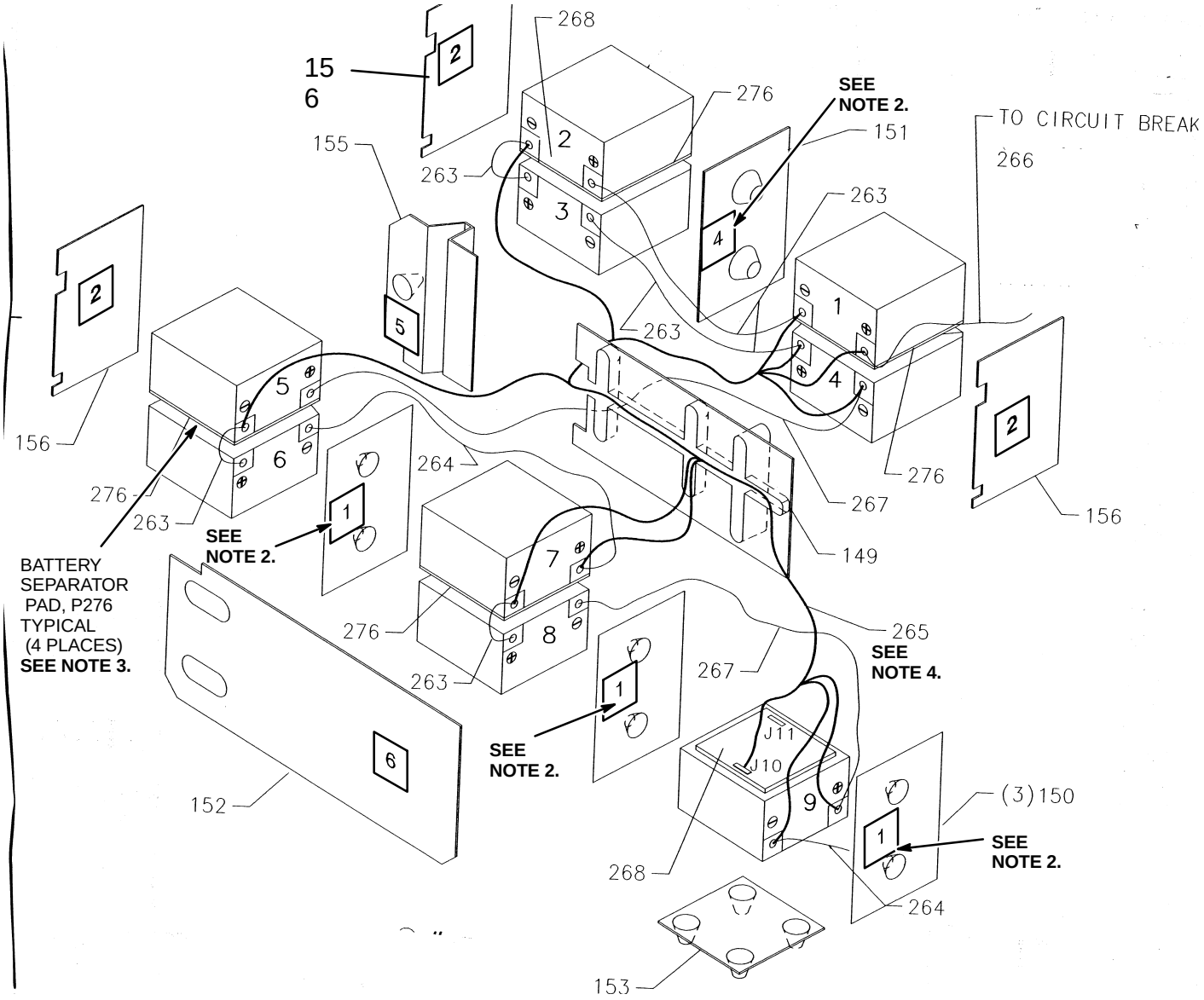

NOTE 1: THERE ARE NO INSULATORS #3 & #7

NOTE 2: DON'T CONFUSE INSULATOR #4 WITH THE INSULATOR #1'S. INSULATOR #4 HAS TWO NON-FUNCTIONAL HOLES. INSULATOR #1'S EACH HAVE TWO FULL CUP−SHAPED BUMPS WITH NO HOLES. THE INSULATOR #1'S MUST BE ORIENTED WITH BUMPS POINTING AWAY FROM YOU.

NOTE 3: ADD BATTERY SEPARATOR PADS BETWEEN BATTERIES 1 & 3, 2 & 4, 5 & 6, AND 7 & 8 WITH RUBBER SIDE DOWN AND PAPER SIDE UP. **DO NOT** REMOVE PAPER.

NOTE 4: CABLE #5 STAYS BEHIND SPACER 1 AND GETS ROUTED ALONG THE SIDE OF PLASTIC SPACER TO BATTERY #9 (+) TERMINAL.

Mark#	Part#	Lead#	Qty.	Length
263	2337894	1	5	7 inches
267	2337894−2	2	2	12 inches
264	2337894−3	3	2	14.5 inches
266	2337894−4	4	1	22 inches

ILLUSTRATION 7−6
INSTALLATION OF BATTERIES IN BATTERY COMPARTMENT WITH SENSE BOARD 2334738−2

s

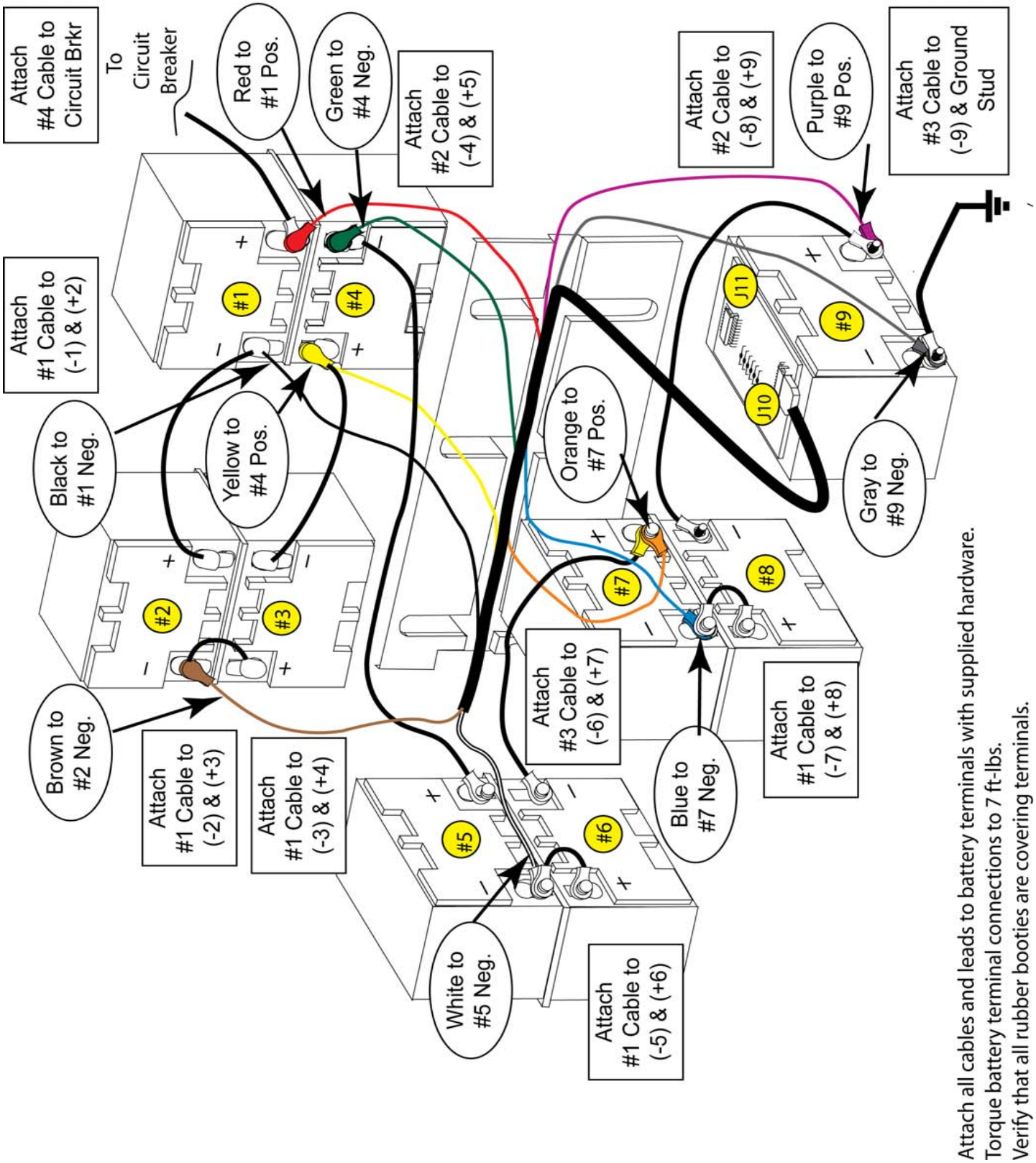

Attach all cables and leads to battery terminals with supplied hardware.
Torque battery terminal connections to 7 ft-lbs.
Verify that all rubber booties are covering terminals.

6. Put both batteries into position in back right side of compartment.

7. Position Batteries #1 & #4 in the compartment stacked one on top of the other, with a separator pad between them (see Illustration 7−5). Push both batteries into position alongside Batteries #2 & #3.

WARNING

EQUIPMENT DAMAGE!
DO NOT MIX AND MATCH HAWKER AND PANASONIC BATTERIES BECAUSE OF IMPEDANCE DIFFERENCES BETWEEN THE TWO DIFFERENT TYPES OF BATTERIES.

Note: Don't confuse Insulator #4 with the Insulator #1. Insulator #4 has two non-functional holes. Insulator #1s have two full cup−shaped bumps with no holes.

8. Install Insulator #4 between Batteries #2 & #3 and Batteries #1 & #4. Install an Insulator #2 next to Batteries #1 & #4, and another Insulator #2 next to Batteries #2 & #3.

9. Connect sense harness wires to batteries #1 and #4 as follows:

Color	Battery	Polarity
Black	1	−
Yellow	4	+
Red	1	+
Green	4	−

Route sense harness in channel between top and bottom batteries.

10. Connect end of Lead #1 Battery #2 (+) to Battery #1 (−). Tighten hardware.

11. Connect end of Lead # 1 Battery #3 (−) to Battery #4 (+). Tighten hardware.

12. Connect end of Cable #4 Battery #1 (+), and slide a boot over this terminal. Route Cable #4 through grommet in hole in top of battery compartment, connect it to the top terminal (LINE) on circuit breaker in AMX1 A3, and slide boot over terminal.

13. Install Insulator #5, Insulator #6, and the remaining Insulator #2.

14. Position Batteries #5 & #6 in compartment, one on top of the other with a separator pad between them.

15. Connect one Cable #1 end to Battery #6 (+), and other end to Battery #5 (−). Tighten Battery #6 (+). Leave nut off of Battery #5 (−) for now.

16. Connect Lead #3 to Battery #6 (−).

17. Connect Lead #2 to Battery #5 (+).

CAUTION

Do not touch Lead #2 and Lead #3. Tape ends for safety.

18. Push Batteries #5 & #6 to rear of battery compartment. Dress sense harness up and out of the way.

19. Connect free end of Cable #2 to Battery #4 (−) and tighten hardware. Slide boots over each terminal.

Note: Cable #2 must route in channel between top and bottom batteries #1, 2, 3, 4, along with sense harness.

20. Connect white harness under cable #1 to Battery #5 (−) and tighten hardware.

21. Place the plastic spacer board into battery compartment as shown in Illustration 7−5. Make sure bumpers on board touch batteries without pinching wires. Wires should be routed in channel between top and bottom batteries #1, 2, 3, 4.

22. Install an Insulator #1 in front of Batteries #5 & #6 as shown in Illustration 7−5, with cup−shaped bumps pointing away from you. Route free end of Cable #3 and sense harness between center channel of plastic spacer.

Note: Taping cables helps keep cables in channel.

23. Position Batteries #7 & #8 in compartment stacked one on top of the other with a separator pad between them.

WARNING

EQUIPMENT DAMAGE!
DO NOT MIX AND MATCH HAWKER AND PANASONIC BATTERIES BECAUSE OF IMPEDANCE DIFFERENCES BETWEEN THE TWO DIFFERENT TYPES OF BATTERIES.

24. Connect one end of Cable #1 to Battery #8 (+) and tighten. Connect other end to Battery #7 (−) leaving nut off or loose. Connect end of Cable #2 Battery #8 (−), and slide a boot over terminal.

25. Push Batteries #7 & #8 back into position, as shown, while holding Cable #3 and harness between center channel of plastic spacer.

26. Connect free end of Cable #3 from Battery #6 [−] to Battery #7 (+) along with sense wire Orange #7 (+), tighten and slide a boot over terminal.

27. Connect sense wire Blue #7 (−) to Battery #7 (−) and tighten nut.

28. Install another Insulator #1 between Batteries #7 & #8 and Battery #9, with cup−shaped bumps pointing away from you. Route free end of Cable #2 and harness to battery #9 between channel of plastic spacer.

29. Install Insulator #8 as shown.

30. Position Battery #9 on top of Insulator #8.

WARNING

EQUIPMENT DAMAGE!
DO NOT MIX AND MATCH HAWKER AND PANASONIC BATTERIES BECAUSE OF IMPEDANCE DIFFERENCES BETWEEN THE TWO DIFFERENT TYPES OF BATTERIES.

31. Connect free end of Cable #2 from Battery #8 [−] to Battery #9 (+), connect sense wire #9 (+) Purple, tighten nut and slide a boot over terminal. Route cable behind Insulator #1 and along plastic spacer.

32. Connect one end of Cable #3 to Battery #9 (−), and connect sense wire #9 (−) Gray, tighten nut and slide a boot over cable terminal. Route other end of Cable #3 through grommet in hole in top of battery compartment. Tape other end of Cable #3.

Note: **Do NOT connect Cable #3 to ground stud yet.**

33. Connect AMX harness to J11 (output) and new battery harness to J1−10 (input) at Battery Sense board connectors. Remove adhesive tape from feet of Sense circuit board and place board on top of battery #9.

34. Measure the battery voltage between top circuit breaker terminal (LINE) with Cable #4 connected (battery positive) and the unconnected end of Cable #3 (battery negative). It should measure between 111 and 118 volts DC, depending on state of charge of the batteries.

35. **(Applicable to Kit 46−329314G5 ONLY.)**

    Route the terminal block cable through the unit and mount the terminal block as follows:

    a. Open top cover of AMX−4.

    b. Route connector end of furnished terminal block cable through grommets in chassis as shown in Illustration 7−7.

    c. Drill two holes 0.140 inches (9/64 inch) diameter, 2.65 inches apart, and attach terminal block using hardware as shown in Illustration 7−7.

    d. Secure terminal block cable to existing harness using furnished Ty−rap straps. Connect other end of cable to the test terminal board connector J11.

Note: The terminal block is a test point, and is only connected to the harness.

    e. Measure the individual battery voltages across terminals of terminal block. Position 1 to Position 2 of terminal block measures Battery #1, Position 2 to Position 3 measures Battery #2, and so forth. Voltage of each battery should be greater than 12.0 Volts. The actual value will depend upon battery state of charge.

ILLUSTRATION 7−7
INSTALLATION OF BATTERY TEST HARNESS IN AMX−4 UNIT
(APPLICABLE TO KIT 46−329314G5 ONLY.)

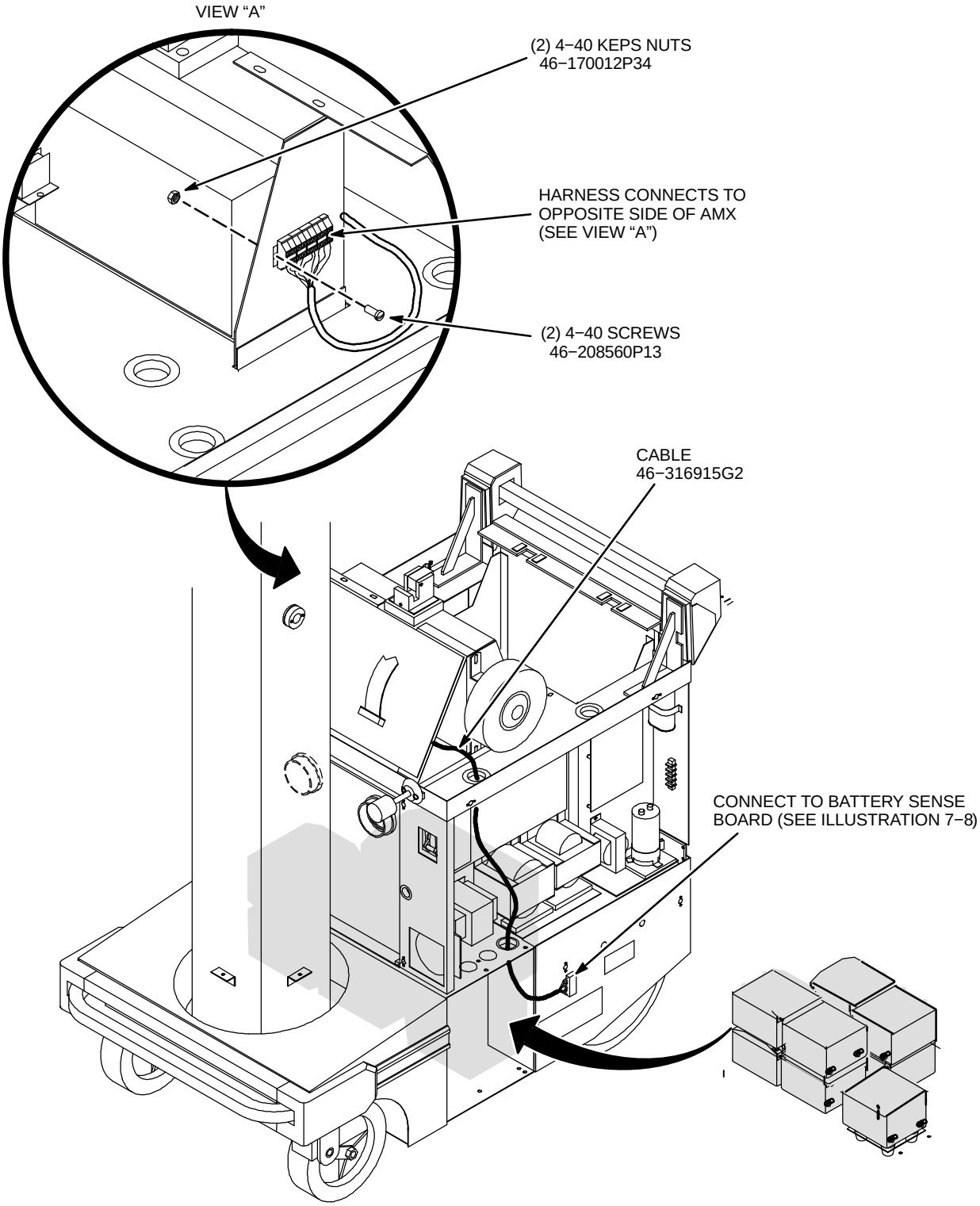

ILLUSTRATION 7−8
BATTERY SENSE BOARD, 2334738−2

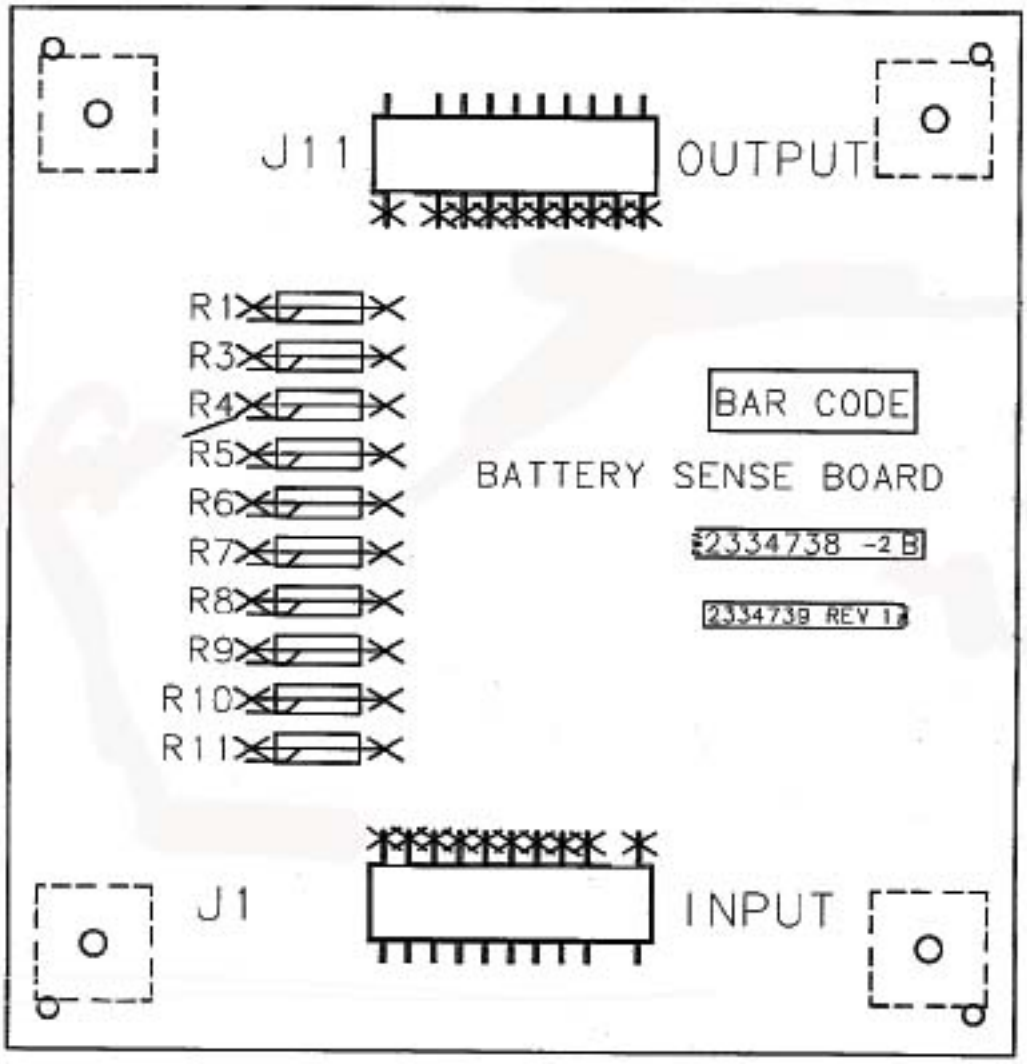

36. Place the unit on a level floor. Extend the horizontal arm and rotate it to the front end of the AMX (vertical−column end). Distribution of weight is necessary in installing the battery−compartment cover. See Illustration 7−9.

ILLUSTRATION 7−9
AMX BATTERY COMPARTMENT COVER INSTALLATION

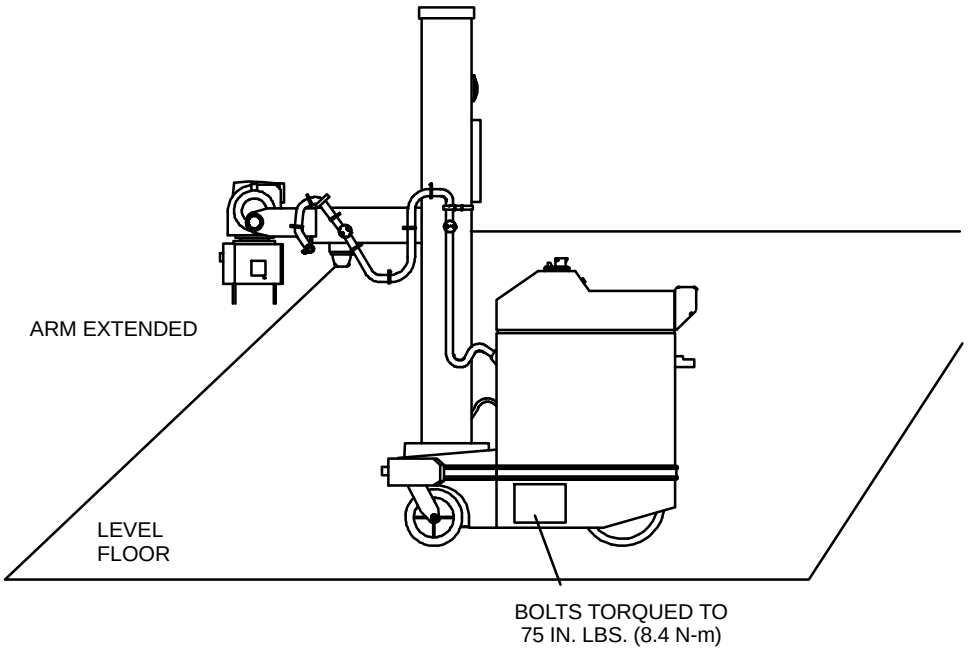

37. Place the remaining Insulator #1 in the compartment opening with cup−shaped bumps pointing away from you, as shown is Illustration 7−5.

38. Install battery compartment cover. Torque six capscrews to 75 inch pounds (8.4 Newton-meters), as shown in Illustration 7−9. Install the two metal plates (if applicable) that correct over−size mounting holes.

CAUTION

The battery compartment cover is an integral part of the Base Assembly. All six bolts must be in place and torqued to 75 pound inches (8.4 Newton-meters) or the Base Assembly can be warped or cracked.

39. Remove tape from free end of Cable #3.

40. Connect Cable #3 to ground stud using flat washer and nut.

SECTION 8 − SERVICING THE BASE ASSEMBLY

8-1 Front Bumper

This avoids damage to the front bumper when jacking up the AMX unit.

8-1-1 Remove Pads

1. Remove the 10−32 x 1.25 inch bolts from each pad and remove the corner pads. See Illustration 8−1.
2. Remove the 10−32 x 1.25 inch bolts and flat washers securing the front bumper and remove the middle piece of the front bumper.

ILLUSTRATION 8−1
REMOVAL OF BUMPER ASSEMBLY

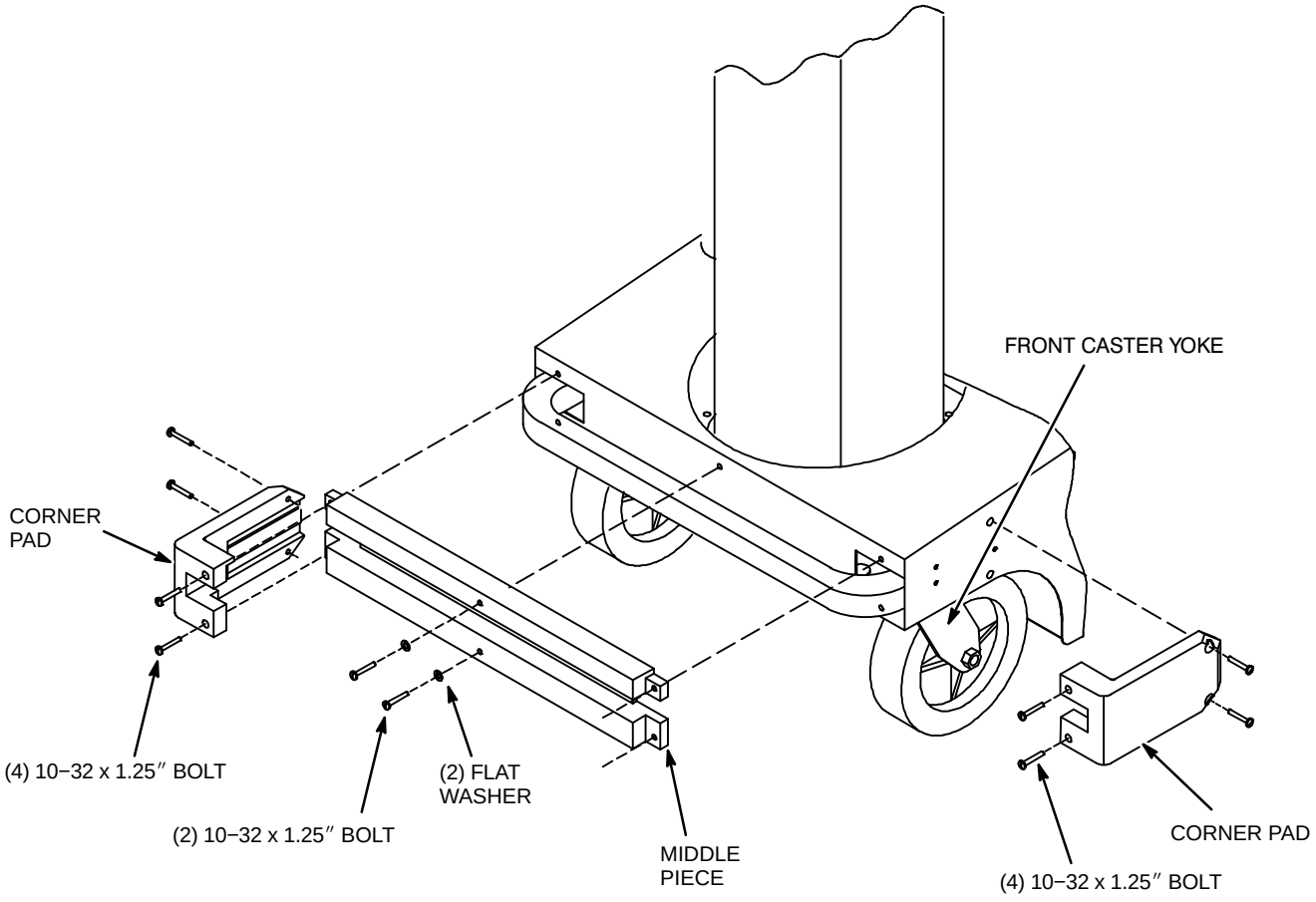

8-1-2 Install Pads

1. Install the middle piece of the front bumper using 10−32 x 1.25 inch bolts and flat washers. See Illustration 8−1.
2. Install each of the two corner pads with 10−32 x 1.25 inch bolts for each pad.

8-1-3 Bumper Switch Removal

1. Remove pads. Refer to Section 8-1-1.
2. Remove actuator bracket to release tension on switch actuator. See Illustration 8−2.
3. Remove two binding head screws holding switch on end of bumper track.
4. Remove switch from bumper assembly.

ILLUSTRATION 8−2
BUMPER SWITCH

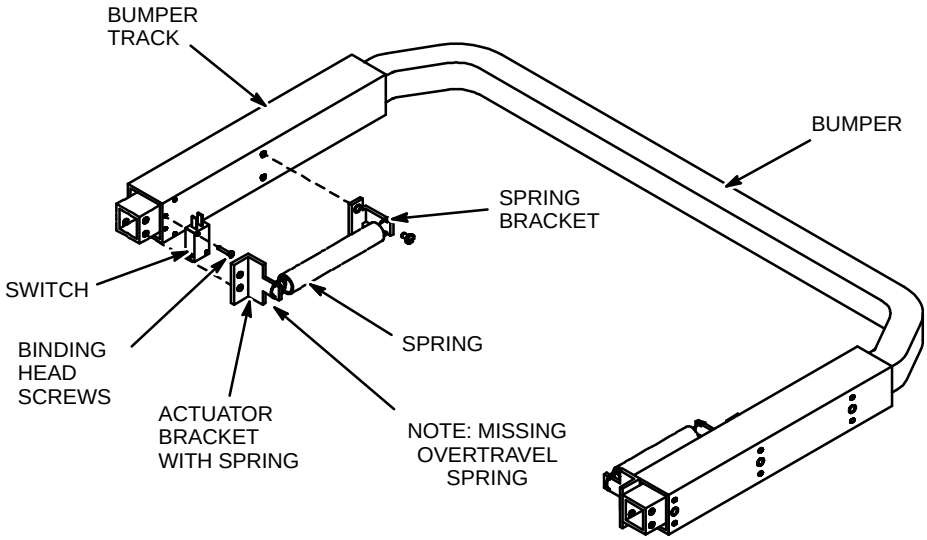

8-1-4 Bumper Switch Installation

1. Shut off power.
2. Install switch on end of bumper track and secure with binding head screws. See Illustration 8−2.
3. Install actuator bracket to place tension on switch actuator.
4. Verify that bumper switch is activated by spring tension on switch actuator bracket.
5. Install bumper assembly.

8-1-5 Bumper Bearings Removal

Note: This procedure covers the removal of any one or more of the eight bearings comprising the bumper assembly.

1. Remove the bumper pads. Refer to Section 8-1-1.
2. Remove the bumper switches. Refer to Section 8-1-3.
3. Remove spring from between actuator bracket and spring bracket to release tension on switch actuator. See Illustration 8−2.
4. Remove switch actuator bracket by removing binding head screws and hex nuts.
5. Slide track from end of bumper assembly to expose bearings.
6. Remove bearing from mounting slot in bumper by removing hex head screw, spacer and shaft.

8-1-6 Bumper Bearings Installation

Note: This procedure covers the removal of any one or more of the eight bearings comprising the bumper assembly.

1. Install bearing in bumper assembly mounting slot and secure with one hex head screw, spacer and shaft. See Illustration 8−3.

ILLUSTRATION 8−3
BUMPER BEARINGS

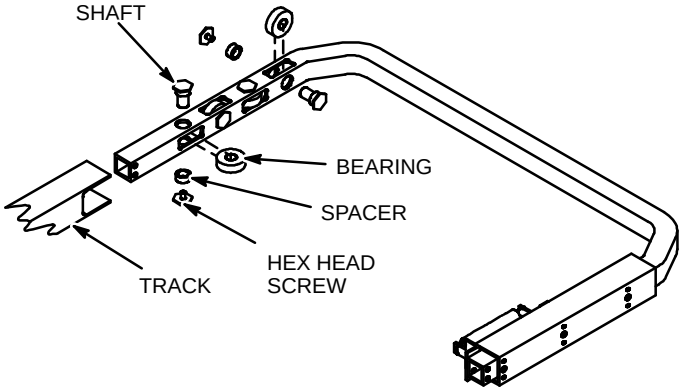

2. Slide track into end of bumper assembly.
3. Install switch actuator bracket and secure with two binding head screws and hex nuts.
4. Install spring between actuator bracket and spring bracket.
5. Verify that bumper switch is activated by spring tension on switch actuator bracket.
6. Install the bumper assembly.

8-2 Raise Unit for Service

Lifting can be done with:

- Automotive floor jack (minimum 1200 lbs. (550 kg) capacity).
- Lever (2 × 4 inches, palette lever) (5 cm × 10 cm).
- Chain hoist.
- AMX−4 Series lifting jack, 46−302966P1 or equivalent service tool.

It is STRONGLY RECOMMENDED that the unit be lifted using the AMX−4 Series lifting jack. This instruction is based on the use of this tool.

Get the AMX−4 lifting jack (or equivalent service tool) and note the two lips on the front of the jack. See Illustration 8−4.

ILLUSTRATION 8−4
AMX−4 LIFTING JACK 46−302966P1

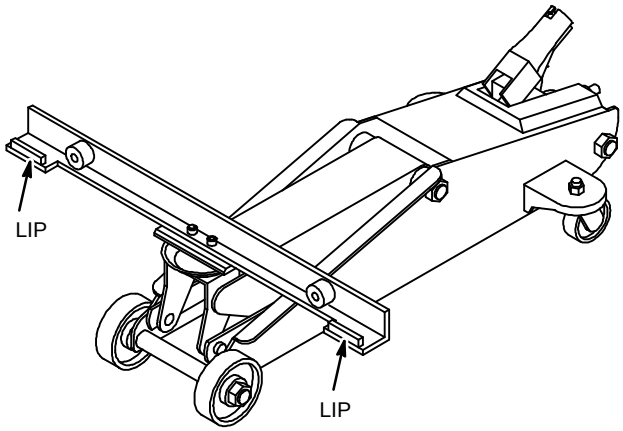

8-2-1 Raise Rear Wheels

1. Rotate front wheel caster toward rear, otherwise unit will be unstable when rear of unit is raised.
2. Block the front wheel and lift drive wheel end of base assembly approximately 10 inches (25 cm) and place it on blocks.
3. Place blocks under wheel being removed to prevent it from falling when axle supports are removed.

8-2-2 Lower Rear Wheels

1. Put the jack under the rear of the AMX unit USING THE TWO LIPS ON THE FRONT OF THE JACK, and lift the AMX unit enough to remove the wood block(s).
2. Lower the AMX unit and remove the jack.

8-2-3 Raise Front Wheels

1. Remove front bumper pads. Refer to Section 8-1-1.
2. Put the jack under the front of the AMX unit. See Illustration 8−5.

ILLUSTRATION 8−5
AMX−4 UNIT WITH JACK IN PLACE (FRONT)

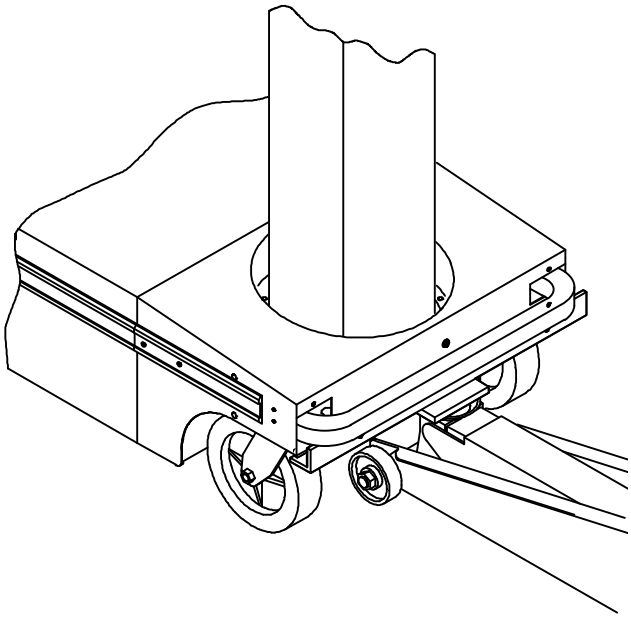

Note: Ensure that the two lips on the front of the jack retain the front of the base in to prevent the unit from falling off the jack.

3. Lift the AMX unit high enough to put the wood block (one 4x4 inch or two 2x4 inch) under the AMX unit as shown in Illustration 8−6. Be sure that the block(s) is (are) centered under the front battery box wall, and be sure that the block(s) extend(s) out at least 2 inches (5 cm) on each side of AMX unit.

ILLUSTRATION 8−6
AMX−4 UNIT SUPPORTED BY WOOD BLOCK (FRONT)

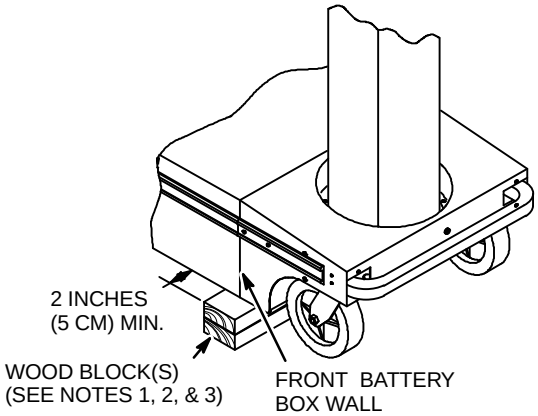

NOTE 1: IF TWO BLOCKS ARE USED, ORIENT BLOCKS FOR MAXIMUM STABILITY.

NOTE 2: CENTER BLOCK(S) WITH FRONT BATTERY BOX WALL.

NOTE 3: LOCATE WOOD BLOCK(S) SO THAT BLOCK(S) STICKS OUT AT LEAST 2 INCHES (5 CM) BEYOND EACH SIDE OF THE AMX UNIT.

8-2-4 Lower Front Wheels

1. Put the jack under the front of the AMX unit USING THE TWO LIPS ON THE FRONT OF THE JACK, and lift the AMX unit enough to remove the wood block(s).
2. Lower the AMX unit and remove the jack.

8-3 Remove Drive Wheels

The following procedure covers removal of either the right or left drive wheel. The wheel mounting support is welded to the side of the base assembly with the notch in the lower surface of the support. All wheels have caliper assemblies.

1. Place the horizontal arm in park position.
2. Remove trim covers. See Section 6.
3. Remove motor and brake assembly. Refer to Section 8-5.

⚠ WARNING

PERSONAL INJURY! WHEN LIFTING THE BACK OF THE UNIT IT CAN BECOME UNSTABLE AND TIP OVER. USE EXTREME CAUTION WHEN PERFORMING THIS OPERATION.

4. Lift the rear of the unit. See Section 8-2.
5. Loosen the four locknuts and flat washers holding the wheel support angle to the base assembly. See Illustration 8−7.
6. Slide the support angle with its wheel block to the side and off of the wheel axle. The mounting holes in the support angle are slotted for this purpose.
7. Leave the drive belt on the axle pulley.
8. Remove the wheel and caliper through the bottom of the base assembly.
9. Remove the four hex socket head capscrews and lockwashers from the top of the wheel mounting support which secure the wheel and caliper assembly to the base assembly.
10. Carefully remove the wheel and caliper assembly through the bottom of the base assembly.

ILLUSTRATION 8−7
DRIVE WHEEL ASSEMBLY

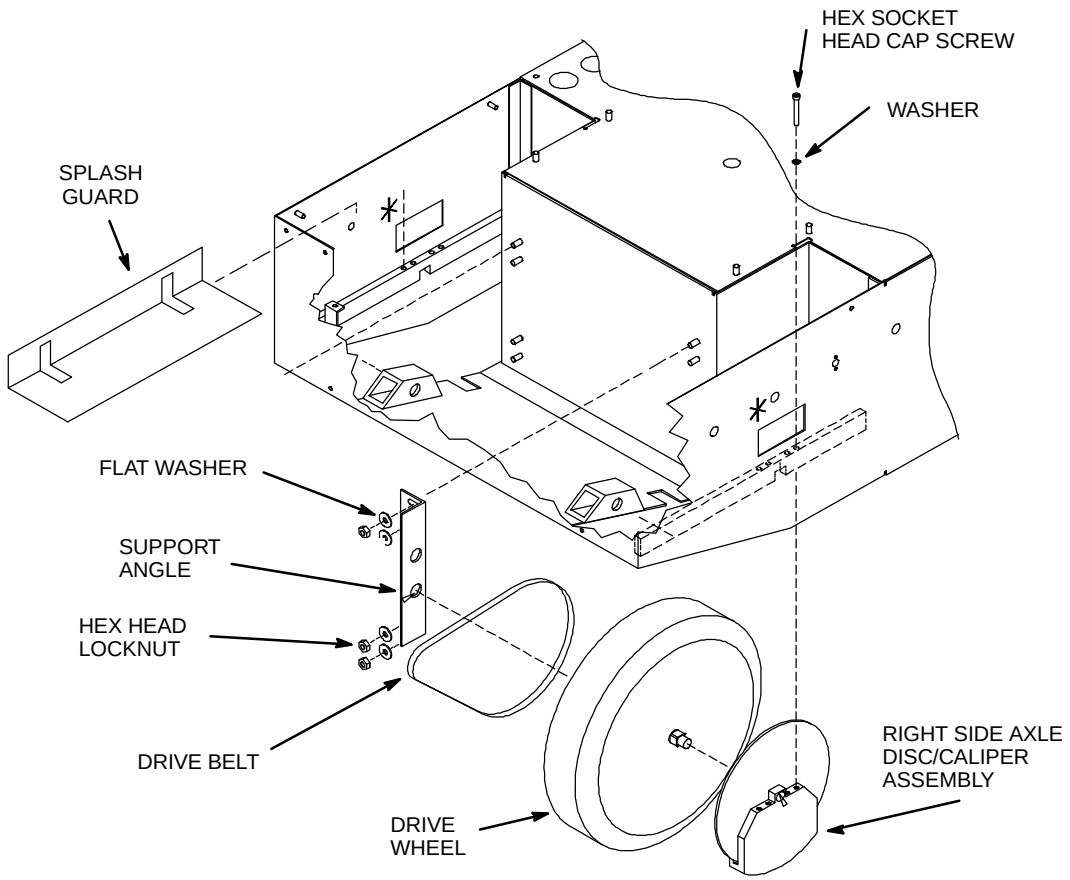

8-4 Install Drive Wheels

Note: This procedure covers the installation of either the right or left drive wheel.

⚠ WARNING **PERSONAL INJURY! THE UNIT CAN BE UNSTABLE WHEN ON BLOCKS AND TIP OVER. USE EXTREME CAUTION WHEN PERFORMING THIS OPERATION.**

Note: Apply light coat of grease (Lubriplate Fiske 630−A−A) to each end of axle.

1. The unit is on blocks approximately 10 inches (25 cm) above the floor.
2. Place the caliper assembly on the wheel axle.
3. Install the drive belt on the drive wheel pulley.
4. Lift the drive wheel through the bottom of the base assembly and into position in the notch in the bottom of the wheel mounting support. See Illustration 8−7.
5. Attach the wheel and caliper assembly to the wheel mounting support with four hex socket head capscrews. Do not tighten in place.
6. Slide the support angle with its wheel block onto the wheel axle as far as it will go.
7. Tighten the four locknuts and flat washers holding the wheel support angle to the base assembly. Torque to 50−70 pound−inches (5.6 to 7.8 N−m).

8. Secure the wheel and caliper assembly to the wheel mounting support. Torque to 40−60 pound−inches (4.5 to 6.7 N−m).
9. Install splash guard and secure with two lock nuts.
10. Install the motor and brake assembly. Refer to Section 8-6.
11. Lower the unit to the floor.

8-5 Remove Motor and Brake

Note: This procedure covers the removal of either the right or left motor and brake assembly.

1. Move unit to a flat, level surface.
2. Shut off power.
3. Remove cassette drawer from unit. Refer to Section 6-1.
4. Disconnect motor and brake wire connectors from motor control panel. See Illustration 8−8.

ILLUSTRATION 8−8
MOTOR AND BRAKE WIRING

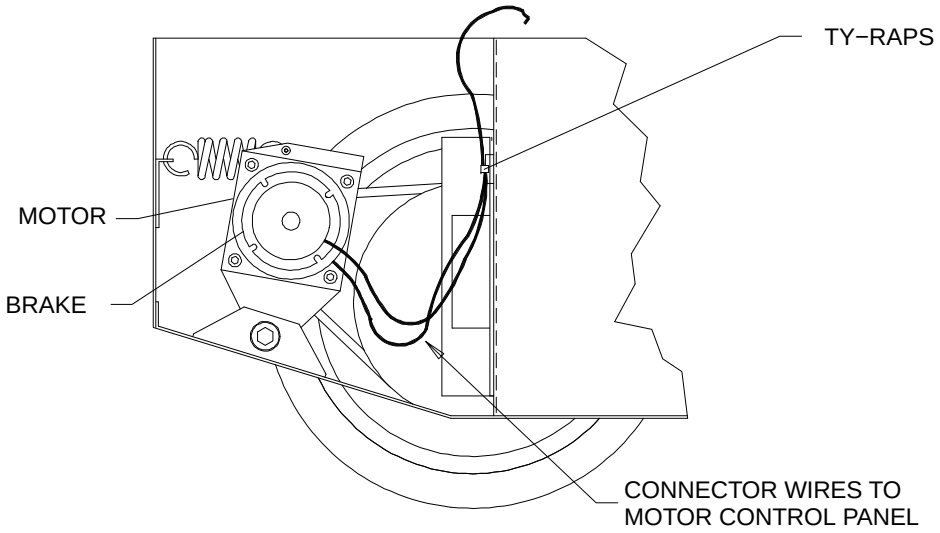

5. Carefully remove spring between base assembly and spring pin on motor mount plate. See Illustration 8−9.
6. Remove nut and bolt holding motor mount to base.
7. Remove drive belt from motor pulley.
8. Remove motor and brake assembly.
9. Remove capscrews and washers holding motor to motor mount plate.
10. Remove binding head screws attaching brake to motor.

ILLUSTRATION 8−9
MOTOR & BRAKE ASSEMBLY

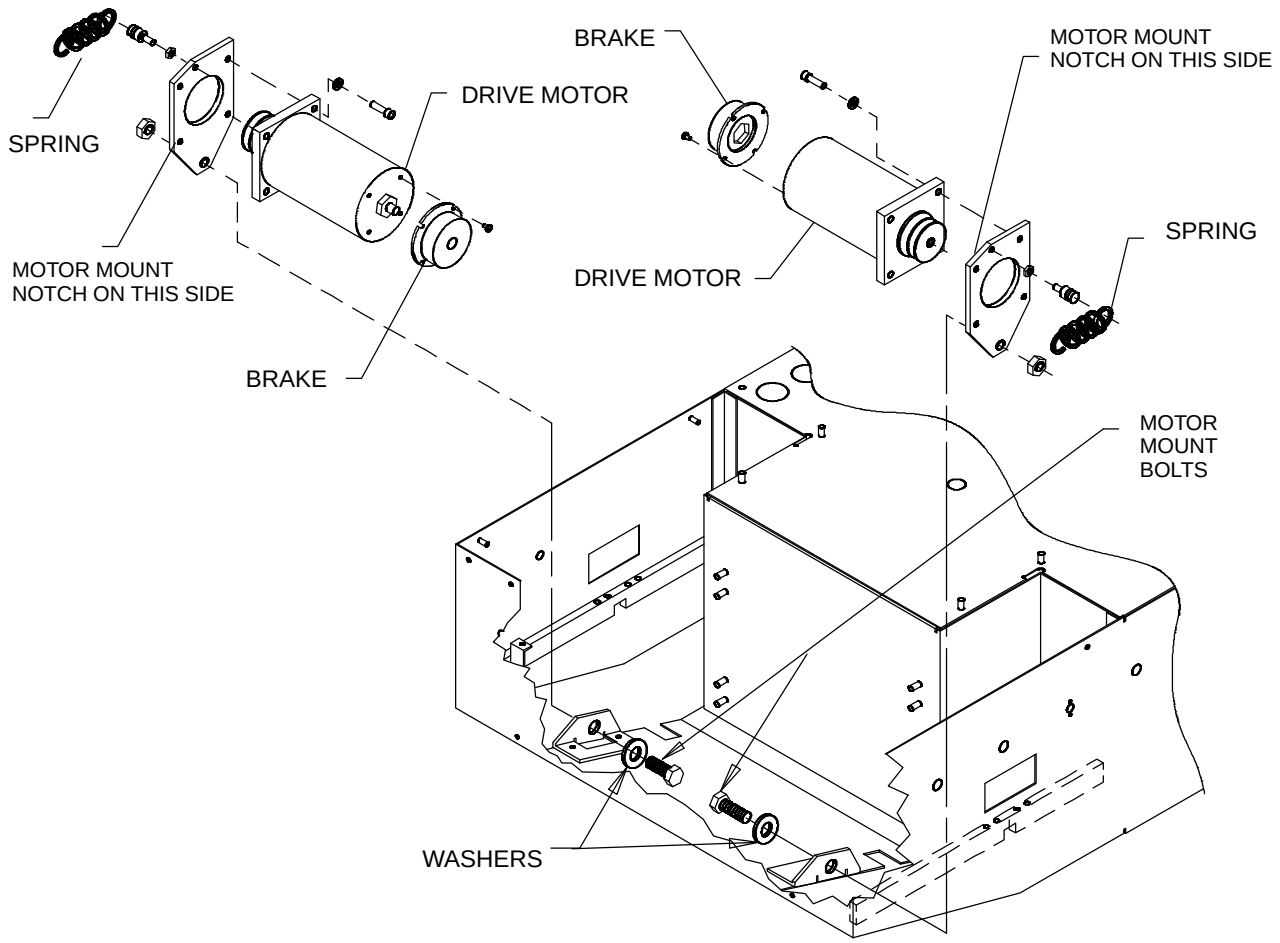

8-6 Install Motor and Brake

Note: This procedure covers the installation of either the right or left motor and brake assembly.

1. Shut off power.
2. Install brake on motor and secure with binding head screws. Be certain brake is oriented on motor (wires in position to be connected to motor control panel). See Illustration 8−8.
3. Install motor on mounting plate and attach with hex socket head capscrews and washers.

Note: Motor mounting plate must be oriented with the plate corner bevel toward the rear. If the Spring Pin was removed from the mounting plate, replace it and check that it does not rub on the wheel. See Illustration 8−9.

4. Install motor and brake assembly in the base assembly.
5. Attach motor mount to base with nut and motor mount bolt and tighten finger tight
6. Place drive belt in position on motor pulley.
7. Carefully install spring between base assembly and motor and spring pin on motor mount plate. This places tension on the drive belt.
8. Tighten motor mount nut, ensuring the belt tension is not offset by tightening. Torque to 50−60 foot−pounds (67.8 − 81.3 N−m).

9. Connect motor and brake wire connectors to motor control panel and replace ty−rap.:
   J1 − Left Motor J2 − Right Motor

Note: Use caution when installing brake connector. Connector is keyed but can be forced on in reverse direction causing brake and possibly printed wire board damage.

10. Install cassette drawer in frame. Refer to Section 6-2.

8-7 Remove Caster Wheel

1. Remove front bumper. See Section 8-1.
2. Lift front of unit. See Section 8-2.
3. Remove the four nuts and caster. See Illustration 8−10.

ILLUSTRATION 8−10
CASTER REMOVAL/INSTALLATION TYPICAL (RIGHT CASTER SHOWN)

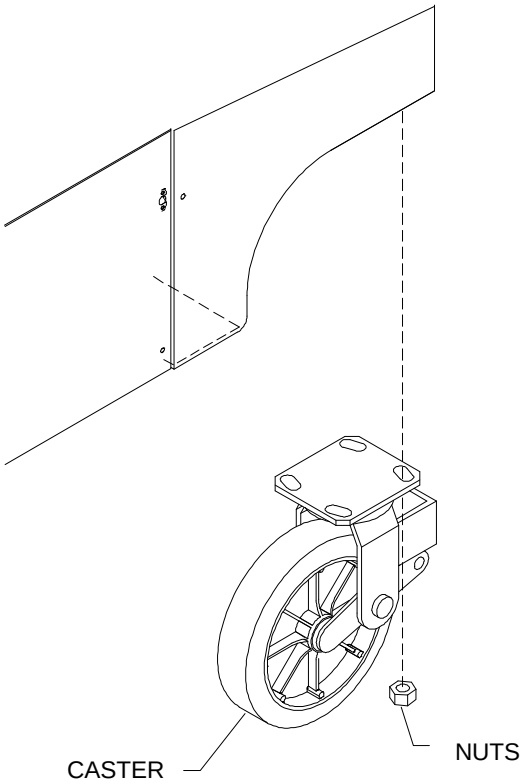

8-8 Install Caster Wheel

1. Install a new caster.
2. Apply Loctite 242 to stud threads and install the four nuts. See Illustration 8−10.
3. Tighten the nuts to 15 to 25 pound−feet (20.5 to 34 N−m).
4. Lower unit. See Section 8-2.
5. Install front bumper. See Section 8-1-2.

SECTION 9 − SERVICING THE DRIVE HANDLE ASSEMBLY

This section provides procedures covering the removal and installation of field serviceable parts in the handle assembly.

9-1 Handle Sensor Removal

Note: This procedure covers removal of either the right or left sensor from the handle assembly.

1. Open top cover and place in position to easily access the handle assembly. Refer to Section 6-7.
2. Disconnect connector at each end of handle assembly. See Illustration 9−1
3. Cut the two ty−raps holding wires to the angle support bracket at each end of the Handle Assembly.
4. Remove handle assembly by removing eight hex flange head capscrews securing it to the two support brackets. See Illustration 9−1.

ILLUSTRATION 9−1
DRIVE HANDLE SUPPORT BRACKET

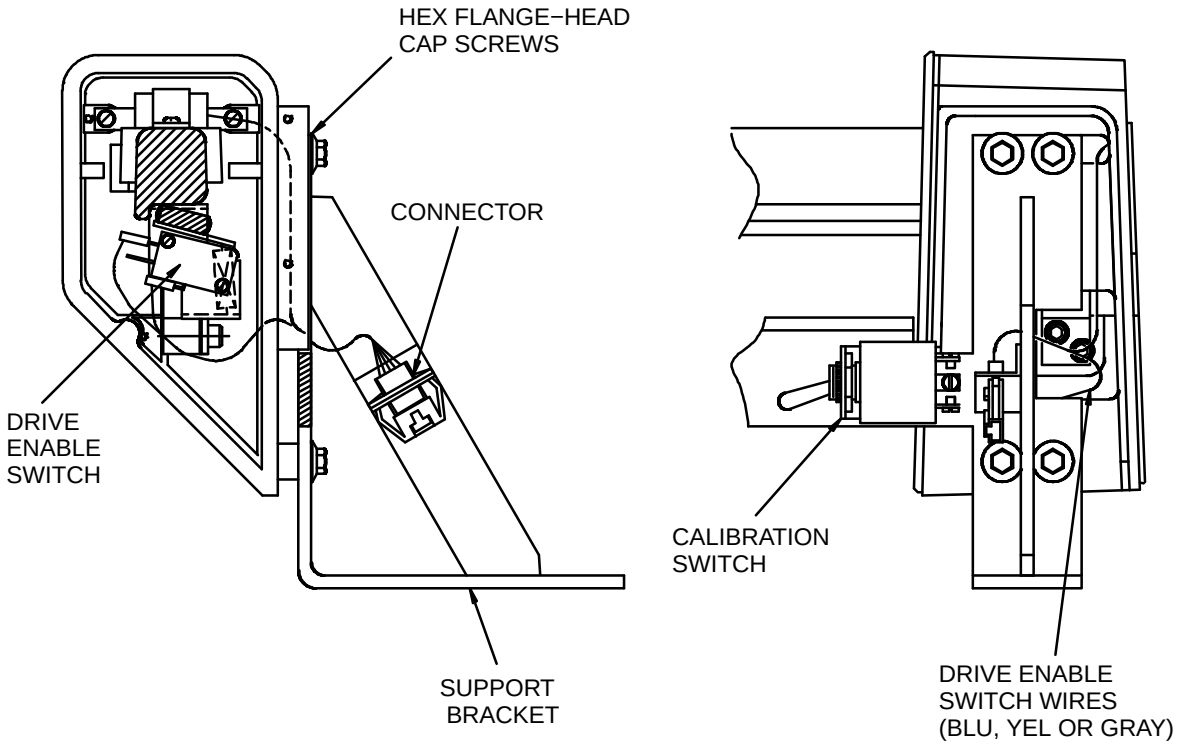

5. Disconnect sensor leads (red, white and black − positions 3, 4 & 5 in connector) from connector. See Illustration 9−2.

ILLUSTRATION 9−2
DRIVE HANDLE SENSOR LEADS

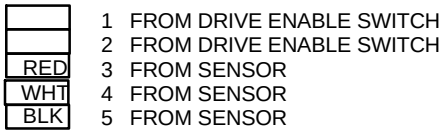

WIRING SIDE MALE

6. Detach end cap from end casting by removing four hex socket button head capscrews. See Illustration 9−3.

ILLUSTRATION 9−3
HANDLE ASSEMBLY

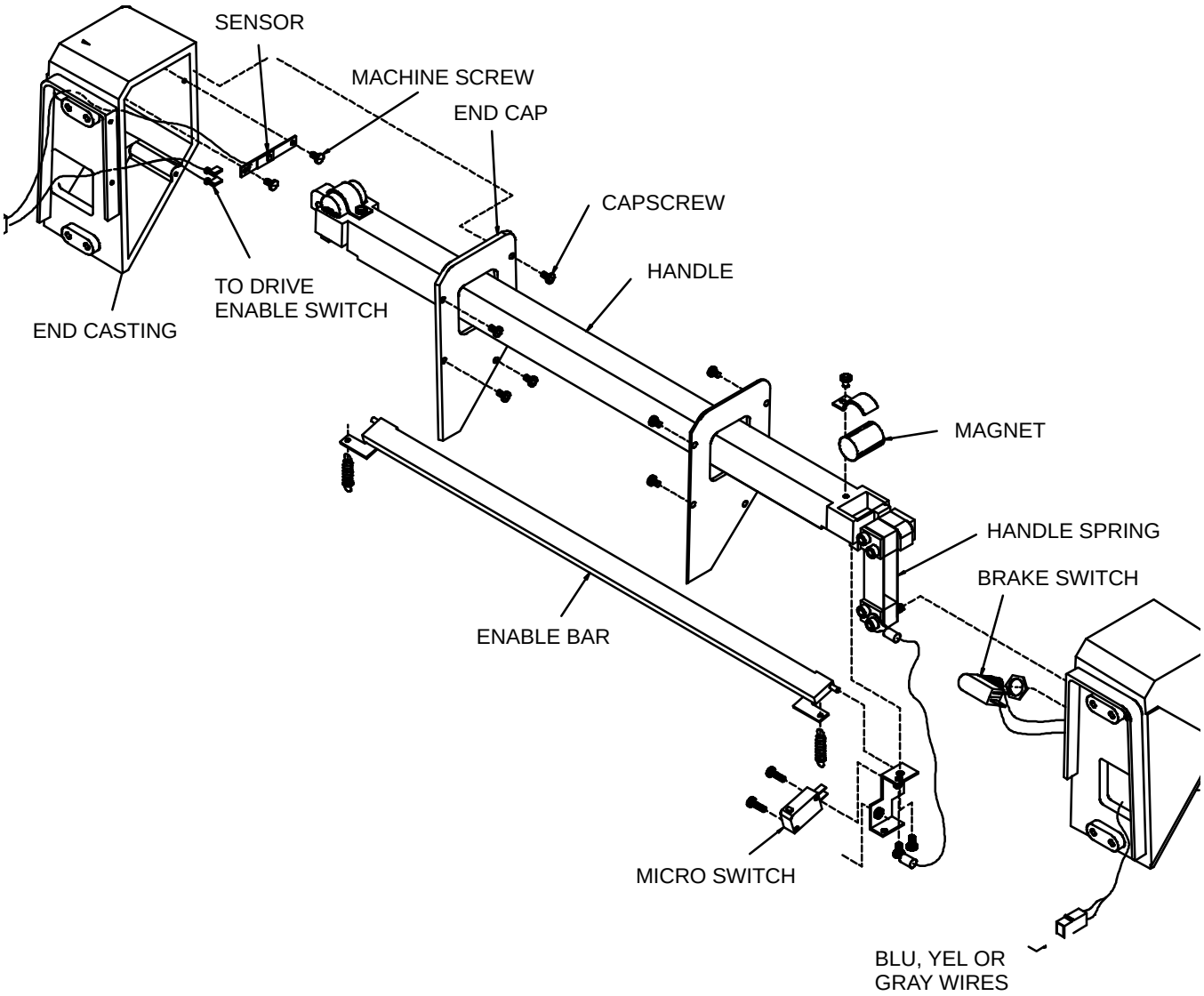

7. Slide end cap along handle away from end casting.
8. Remove end casting from handle assembly by removing two hex socket head capscrews securing it to handle springs. Be careful not to damage sensor and drive enable switch leads.
9. Remove two binding head capscrews securing sensor to standoff posts inside the end casting.
10. Pull sensor leads through back of end casting and remove sensor.

9-2 Handle Sensor Installation

Note: This procedure covers installation of either the right or left sensor in the handle assembly.

1. Position sensor on standoff posts inside end casting and secure with two binding head capscrews. See Illustration 9−3.
2. Feed sensor leads through back end of casting to the connector.

3. Position handle assembly in end casting and secure handle springs to casting with two hex socket head capscrews. Be careful not to damage sensor and drive enable switch leads.
4. Slide end cap along handle and position on end casting.
5. Secure end cap on end casting with four hex socket button head capscrews.
6. Connect sensor leads (red, white and black − positions 3, 4 & 5 in connector) to connector). See Illustration 9−2.
7. Fasten handle assembly to two support brackets with eight hex flange head capscrews. See Illustration 9−1.
8. Connect connectors at each end of handle assembly.
9. Connect ground wire, located at left end of handle, to mainframe.
10. Attach wires to the handle assembly angle support bracket with ty−raps.
11. Close top cover. Refer to Section 6-8.

9-3 Handle Drive Enable Switch Removal

Note: This procedure covers removal of either the right or left enable switch from the handle assembly.

1. Open top cover and place in position to easily access the handle assembly. Refer to Section 6-7.
2. Cut ty−raps holding drive enable switch leads to end casting angle support bracket. See Illustration 9−1.
3. Free the drive enable switch leads from the other wires. (blue, yellow or gray − positions 1 & 2 in connector) See Illustration 9−2.
4. Disconnect drive enable switch leads from connector.
5. Remove end cap from end casting by removing four hex socket button head capscrews. See Illustration 9−3.
6. Slide end cap along handle away from end casting to allow access to drive enable switch.
7. Pull switch leads through back of end casting.
8. See Illustration 9−4 for the drive enable microswitch.
9. Remove two screws securing drive enable microswitch to bracket, and remove this microswitch.

ILLUSTRATION 9−4
DRIVE ENABLE MICROSWITCH

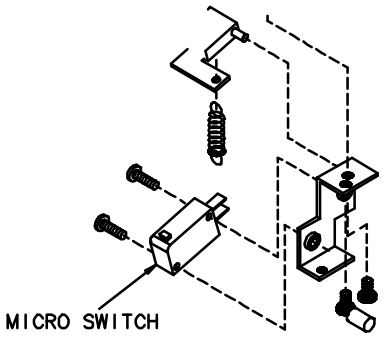

9-4 Handle Drive Enable Switch Installation

Note: This procedure covers installation of either the right or left drive enable switch in the handle assembly.

1. See Illustrations 9−1 through 9−4 for the drive enable microswitch.

2. Place the drive enable microswitch on its bracket and secure it in place with two screws.
3. Feed drive enable switch leads through back of end casting to connector.
4. Slide end cap along handle into position on end casting.
5. Secure end cap to end casting with four hex socket button head capscrews.
6. Connect drive enable switch leads (blue, yellow or gray) to connector (positions 1 & 2 in connector). See Illustration 9−2.
7. Secure enable switch leads and other leads to end casting support bracket with a ty−rap. See Illustration 9−1.
8. Close top cover. Refer to Section 6-8.

SECTION 10 − SERVICING THE HIGH VOLTAGE TRANSFORMER

This section provides procedures covering the removal and installation of the high voltage transformer.

10-1 High Voltage Transformer Removal

1. Shut power off by turning the circuit breaker OFF.
2. Remove front cover by carefully pulling cover from four ball stud retainer sockets.
3. Disconnect anode and cathode cables from high voltage transformer.
4. Remove two cap screws holding rear cover on base assembly and remove cover.
5. Remove cassette drawer. Refer to Section 6-1.
6. Remove cassette drawer magnetic strip lock by removing three binding head screws and flat washers.
7. Remove high voltage transformer terminal cover by removing two binding head screws and washers. See Illustration 10−1.

ILLUSTRATION 10−1
HIGH VOLTAGE TRANSFORMER

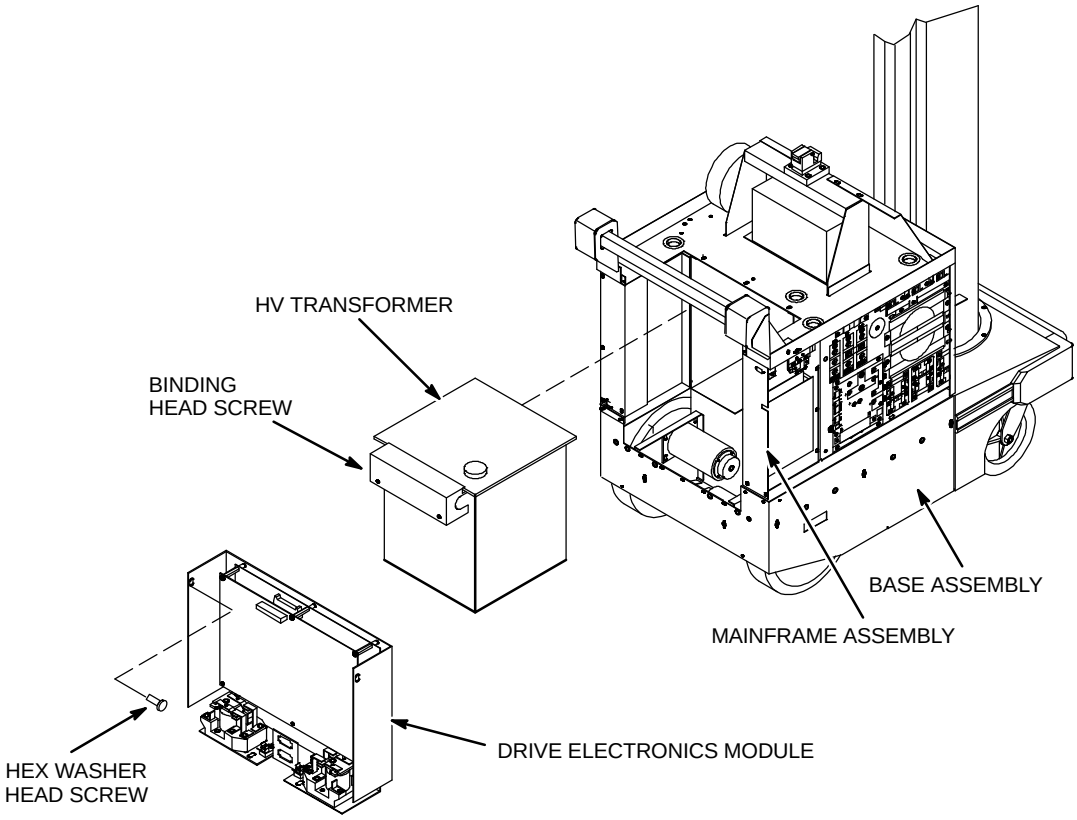

8. Tag and label all leads on terminal
9. Disconnect all leads from terminal.
10. Tag and label all connections to Drive Electronics Module Assembly.
11. Disconnect all connections to Drive Electronics Module Assembly.
12. Remove Drive Electronics Assembly by removing four hex washer head screws securing it to mainframe.

WARNING

PERSONAL INJURY! HIGH VOLTAGE TRANSFORMER WEIGHS APPROXIMATELY 100 LBS (45KG). USE CAUTION WHEN MOVING IT.

Note: Before sliding high voltage transformer to rear of unit, move cable harness out of way of transformer cap.

13. Use two people to remove high voltage transformer.
14. While one person pushes transformer from front of unit, second person guides transformer out back of unit until it rests on rear edge of base assembly.
15. Use two people to lift transformer out of unit.

10-2 High Voltage Transformer Installation

1. Shut power off by turning circuit breaker OFF.
2. Use two people to install transformer.

WARNING

PERSONAL INJURY! HIGH VOLTAGE TRANSFORMER WEIGHS APPROXIMATELY 100 LBS (45KG). USE CAUTION WHEN MOVING IT.

3. Lift transformer and place front side on edge of opening into mainframe Rest the terminal side of transformer on rear edge of base assembly.

Note: Before sliding high voltage transformer into unit:
- Check oil level
- Check vent is open
- Set spark gap to 0.01 inches (.25 millimeters)
- Move cable harness out of way of transformer cap.

4. While one person pushes transformer from back of unit, second person guides transformer into unit until it contacts transformer restraint plate.
5. Install Drive Electronics Module Assembly and secure it to mainframe with four hex washer head screws.
6. Connect all connections to Drive Electronics Module Assembly in accordance with tagged and labeled instructions on connectors.
7. Connect all leads to transformer terminal in accordance with tagged and labeled instructions on leads.
8. Remove all tags.
9. Install high voltage transformer terminal cover and secure in place with two binding head screws and washers.
10. Install cassette drawer magnetic strip lock and secure with three binding head screws and flat washers.
11. Install cassette drawer. Refer to Section 6-2.
12. Install rear cover and secure with two flat head cap screws.
13. Connect anode and cathode cables to high voltage transformer.
14. Install front cover with two flat head capscrews.

SECTION 11 − SERVICING THE POWER CORD, REEL ASSEMBLY, CABLE ROUTING

This section covers the removal and installation of the main power cord reel, and the horizontal arm/vertical column cable routing.

11-1 Cord/Cord Reel Removal

11-1-1 Cord Reel Removal (Domestic Models)

1. Shut power off by turning circuit breaker OFF.
2. Open top cover. Refer to Section 6-7.
3. Remove four hex nuts attaching low voltage power supply to mainframe and slide it backward out of mainframe housing. See Illustration 11−1.
4. Disconnect cord reel leads from F1, F2 and ground stud.
5. Remove two internal hex cap screws retaining grommet in cut−out in mainframe and remove cable and grommet.
6. Remove two hex washer head screws and lock nuts holding cord reel to side of low voltage power supply housing.
7. Lift off cord reel pulling leads through grommet in low voltage power supply housing.

ILLUSTRATION 11−1
CORD REEL REMOVAL/INSTALLATION

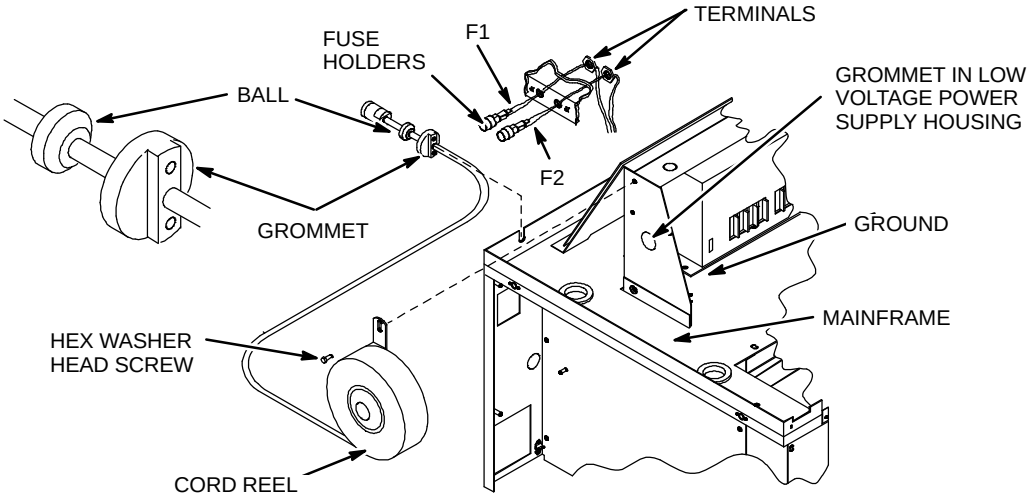

11-1-2 Cord Reel Removal (IEC Models)

1. Shut power off by turning circuit breaker OFF.
2. Open top cover. Refer to Section 6-7.
3. Disconnect cord reel leads at main terminal block. See Illustration 11−2.
4. Remove two internal hex cap screws retaining grommet in cut−out in mainframe and remove cable and grommet.
5. Remove two hex washer head screws and lock nuts holding cord reel to side of low voltage power supply housing.
6. Loosen screw in strain relief bracket located behind cord reel.

7. Lift off cord reel pulling leads through strain relief bracket.

ILLUSTRATION 11−2
CORD REEL REMOVAL/INSTALLATION

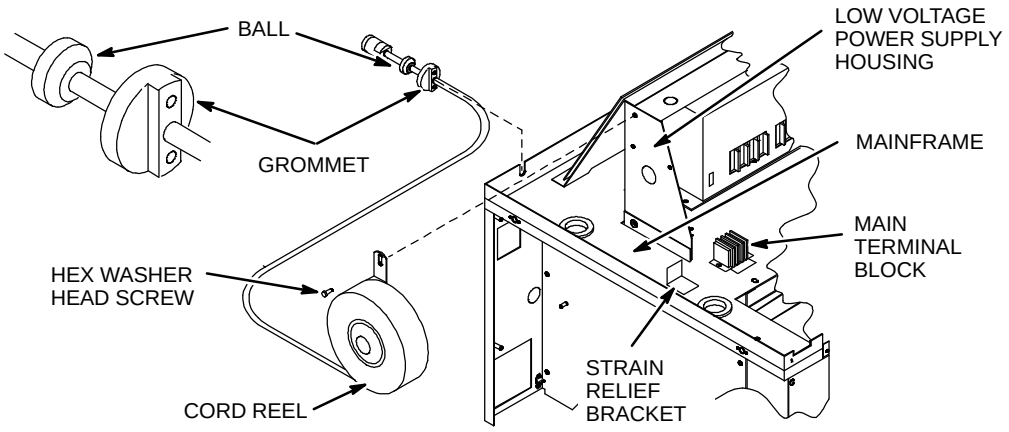

11-2 Cord/Cord Reel Installation

11-2-1 Cord Reel Installation (Domestic Models)

1. Shut power off by turning circuit breaker OFF.
2. Feed cord reel leads through grommet in low voltage power supply housing. See Illustration 11−1.
3. Install cord reel on side of low voltage power supply housing and secure with two hex washer head screws and lock nuts.
4. Install cable grommet in cut−out in mainframe with two cap screws.
5. Connect three leads from cord reel to F1 (Black), F2 (White) and ground stud (Green).
6. Slide low voltage power supply into mainframe housing and fasten with four hex nuts.
7. Close top cover. Refer to Section 6-7.

11-2-2 Cord Reel Installation (IEC Models)

1. Shut power off by turning circuit breaker OFF.
2. Feed cord reel leads through strain relief bracket and tighten bracket retaining screw. See Illustration 11−2.
3. Install cord reel on side of low voltage power supply housing and secure with two hex washer head screws and lock nuts.
4. Install cable grommet in cut−out in mainframe with two cap screws.
5. Connect three leads from cord reel to main terminal block. Use color code as identified by tag adjacent to terminal block.
6. Close top cover. Refer to Section 6-7.

11-3 Horizontal Arm and Vertical Column Cable Routing

There are seven cables mounted on the horizontal arm and column. These must be carefully routed and mounted in order for the equipment to be operated with maximum flexibility and to prevent binding or jamming of cables which would restrict positioning the X−ray tube.

Cables:

- Cathode − X−ray tube to transformer located in base of unit.

- Anode − X−ray tube to transformer located in base of unit.
- Collimator − Collimator to terminal box located on vertical column assembly
- X−ray Control − X−ray tube to terminal box
- Horizontal Arm Brake − Horizontal arm to terminal box
- Control − Terminal box to base unit
- Upper Column Brake − Upper brake to terminal box

When connecting the anode or cathode cables to the tube or transformer, see Direction 2196272−100, *High Voltage Cable Installation and Troubleshooting Procedures*.

11-3-1 Cathode Cable

1. The cathode cable starts at the tube cathode connector, runs through the yoke, crosses underneath the opposite side of the yoke to clamp point “K.” See Illustration 11−3.

ILLUSTRATION 11−3
CATHODE CABLE ROUTING FROM TUBE TO FIRST CLAMP

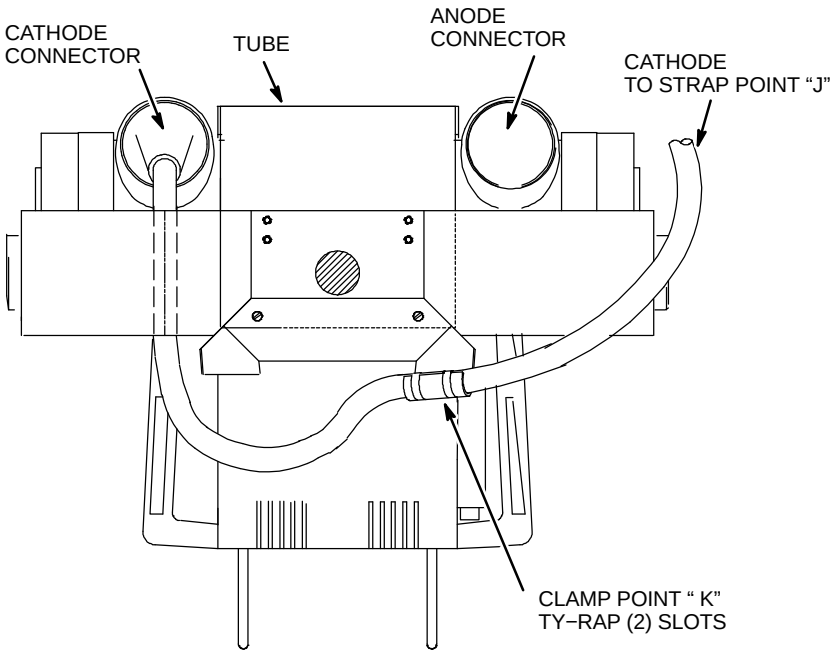

2. From clamp “K” the cable continues to strap point “M” and then to clamp point “H.” See Illustration 11−4.

ILLUSTRATION 11−4
CATHODE CABLE ROUTING FROM TUBE

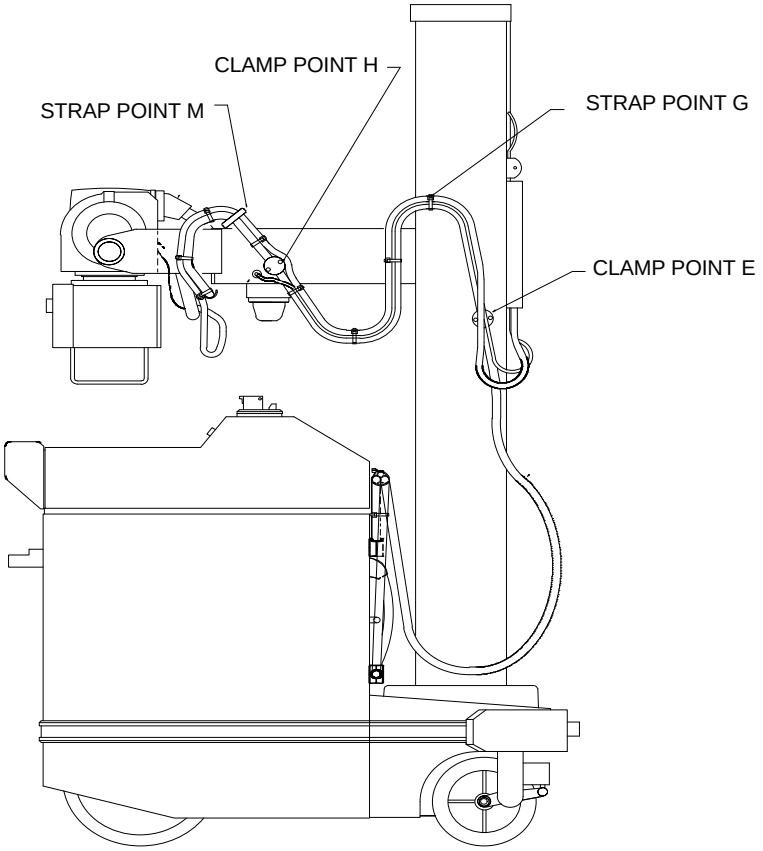

3. The cathode cable continues from clamp point “H” and strap point “G,” to clamp point “E” to the front panel in a figure−eight configuration, and then terminates at the transformer in the base of the unit.
   > The distances are referenced in Illustration 11−5.

ILLUSTRATION 11−5
CATHODE CABLE

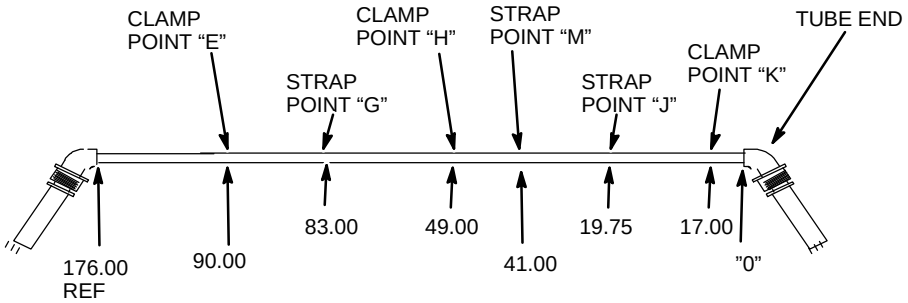

Note: Strap point “J” is installed with collimator cable.

11-3-2 Anode Cable

1. The anode cable starts at the tube anode connector, runs through the yoke crosses underneath to the opposite side of the yoke to clamp point “D.” See Illustration 11−6.

ILLUSTRATION 11−6
ANODE CABLE ROUTING FROM TUBE

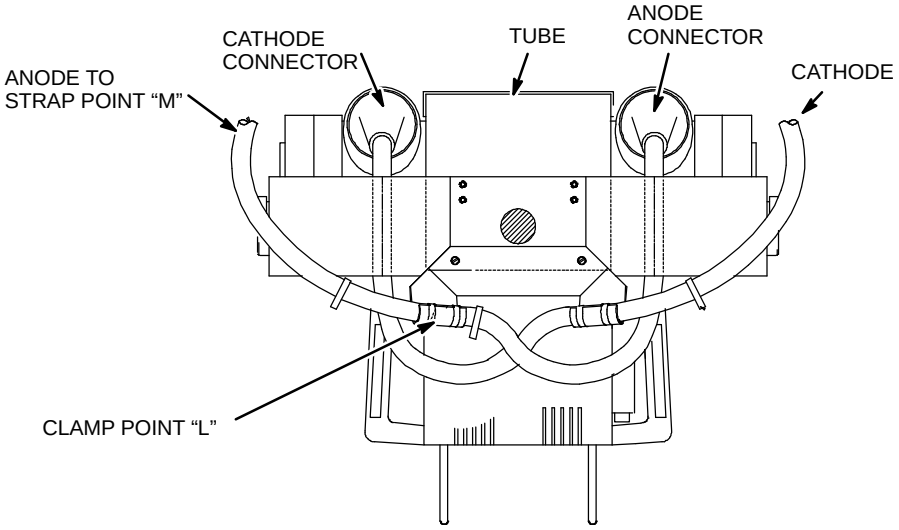

2. From clamp point “L” the cable continues to strap point “N” and clamp point “D.” See Illustration 11−7.

ILLUSTRATION 11−7
ANODE CABLE ROUTING FROM FIRST CLAMP TO TRANSFORMER

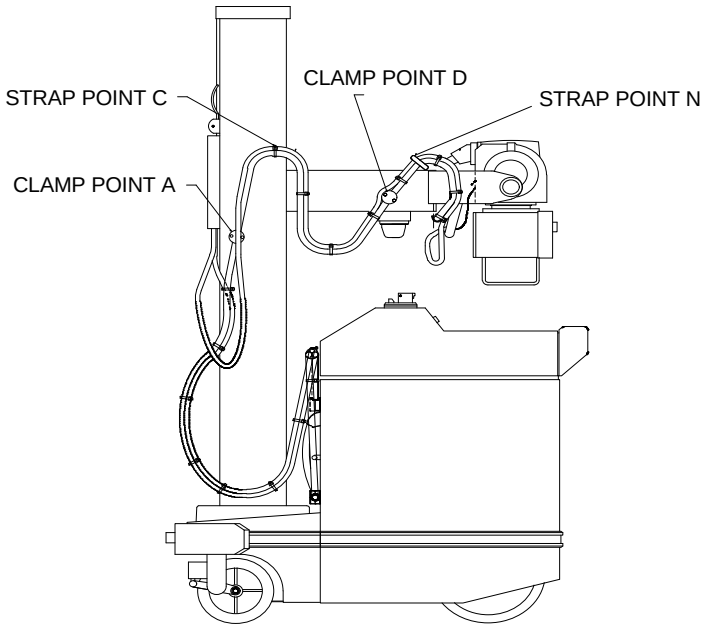

> The distance from the tube to each clamp and strap point is shown in Illustration 11−8.

ILLUSTRATION 11−8
ANODE CABLE

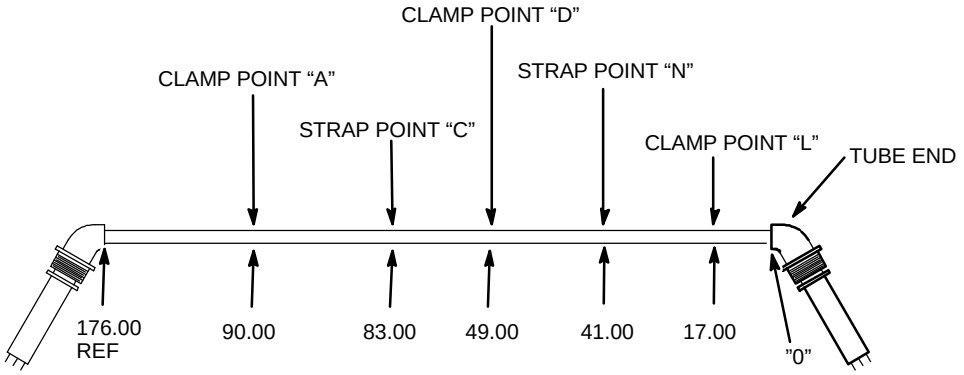

3. The anode cable continues from clamp point “D” to strap point “C,” to point “A” and then to the front panel in a figure−eight configuration, then terminates at the transformer in the base of the unit.

11-3-3 Collimator Cable

1. The collimator cable starts at the collimator, passes over the anode cable and goes to strap point “J” where it is joined to the cathode cable. There is a large loop of cable before reaching strap point “J” as shown in Illustration 11−9.

ILLUSTRATION 11−9
COLLIMATOR CABLE ROUTE TO FIRST STRAP

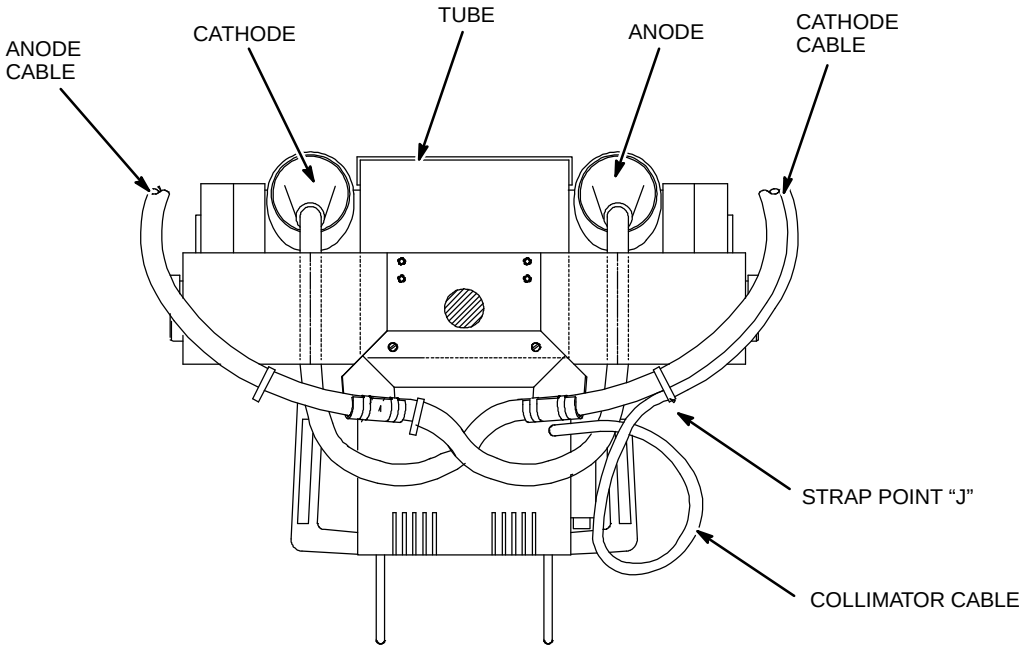

2. Continue routing and ty-rapping the collimator cable along the cathode cable to strap point “C.” See Illustration 11−10.

ILLUSTRATION 11−10
CATHODE AND COLLIMATOR CABLES

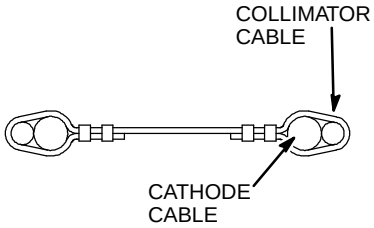

3. There is a large loop of collimator cable immediately after strap point “C.” See Illustration 11−11.

ILLUSTRATION 11−11
COLLIMATOR CABLE ROUTE ON CATHODE CABLE

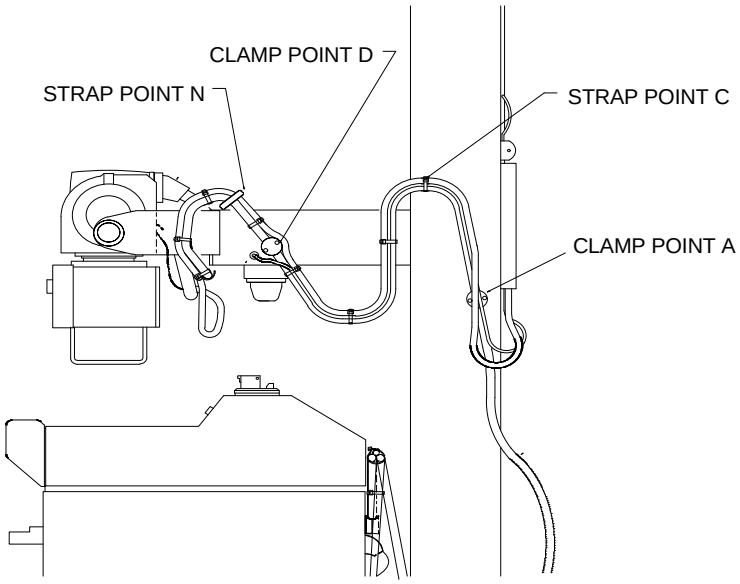

4. The collimator cable goes from strap point “C” directly into the vertical column assembly terminal box where it is connected to terminal strip AMX3 A1 TS1. See Illustration 11−12 and Table 11−1.

ILLUSTRATION 11−12
COLUMN TERMINAL STRIP AMX3 A1 TS1

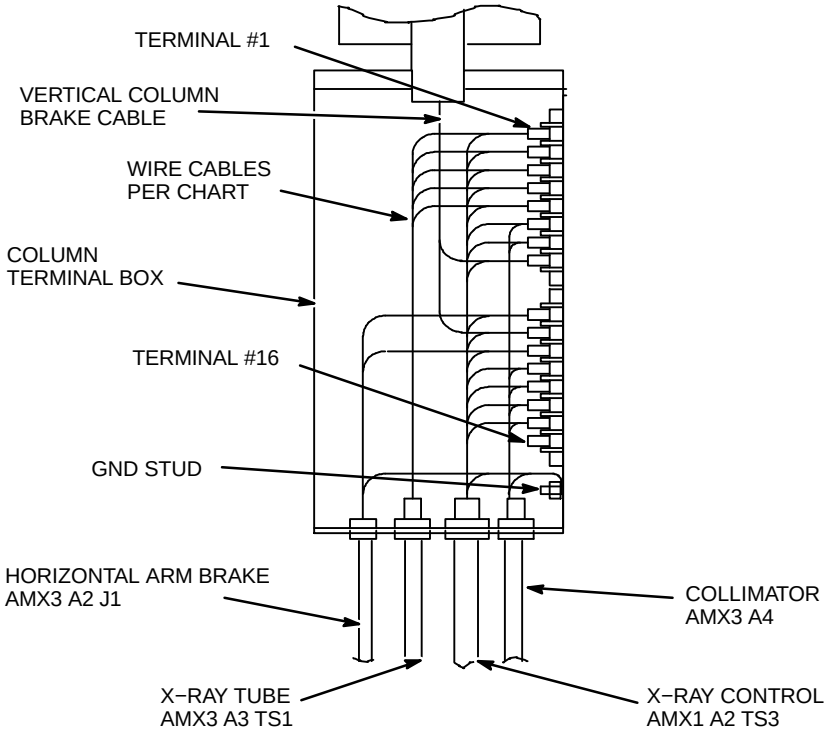

TABLE 11−1
AMX3 A1 TS1 CONNECTIONS

Terminal No.	Signal Name	FROM		TO		
		AMX1 A2 TS3	Color	Color	Terminal	
1	**ROTOR PHASE2**	3	BLK	BLK	AMX3 A3 TS1-5	X−RAY TUBE
2	**ROTOR COMN**	4	WHT	WHT	AMX3 A3 TS1-3	X-RAY TUBE
3	**ROTOR PHASE 1**	5	GRN	GRN	AMX3 A3 TS1-4	X-RAY TUBE
4	**X-RAY PRES SW**	6	WHT/ORN	BLU	AMX3 A3 TS1-1	X-RAY TUBE
5	**X-RAY PRES SW RTN**	7	GRY	RED	AMX3 A3 TS1-2	X-RAY TUBE
6	**FIELD LIGHT SW**	8	WHT/BRN	WHT	AMX3 A4	COLLIMATOR
7	**FIELD LIGHT SW RTN**	9	WHT/RED	YEL	AMX3 A4	COLLIMATOR
8	**+12VDC LOCKS**	10	WHT/BLK	RED	AMX3 BRK2	COLUMN LOCK
9	− JUMPER FROM 8 −			RED	AMX3 A2 J1	TUBE ARM LOCK
10	**−BATT**	11	VIO	BLK	AMX3 BRK2	COLUMN LOCK RTN
11	− JUMPER FROM 10 −			BLK	AMX3 A2 J1	TUBE ARM LOCK RTN
12	**PWR GND**	12	YEL	ORN	AMX3 A4	COLLIMATOR
13	**+24VDC**	13	BLU	GRN	AMX3 A4	COLLIMATOR
14	**FIELD LIGHT**	14	BRN	RED/BLK	AMX3 A4	COLLIMATOR
15	**FIELD LIGHT RTN**	15	ORN	BRN/BLU	AMX3 A4	COLLIMATOR
16	NOT USED					

Terminal No.	Signal Name	AMX1 A2 TS3	Color	Color	Terminal	
GND STUD		BASE GND STUD	GRN/YEL	GRN/YEL	AMX3 A2 J1	TUBE ARM GND
				GRN/YEL	AMX3 A4	COLLIMATOR GND

11-3-4 Stator Cable

1. The stator cable starts at the tube, passes under the cathode cable and joins the anode cable just before clamp “L.” There is a large loop of cable before reaching clamp point “L.” The cables are ty−rapped on each side of clamp point “L” as shown in Illustration 11−13.

ILLUSTRATION 11−13
STATOR CABLE ROUTE TO FIRST TY−RAP

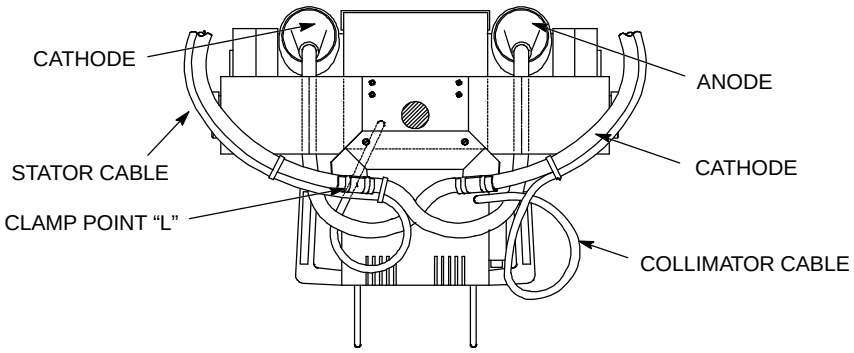

2. The stator cable follows the anode cable from clamp point “L” to strap point “M” with two ty−raps in between. See Illustration 11−14.

ILLUSTRATION 11−14
STATOR CABLE ROUTE ON ANODE CABLE

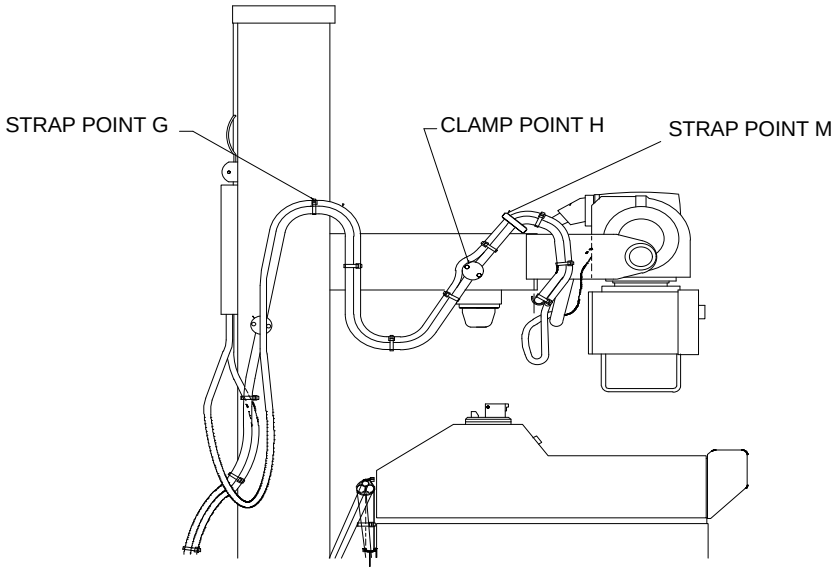

3. Continue routing and ty-rapping the collimator cable along the anode cable to strap point “G.” See Illustration 11−15.

ILLUSTRATION 11−15
ANODE AND STATOR CABLES

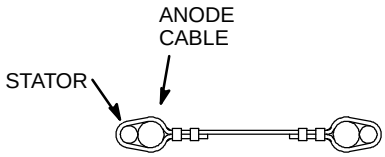

4. The horizontal arm brake cable is also picked up and retained until strap point “G.” See Illustration 11−14.

5. There is a large loop after strap point “G” before the cable enters the bottom of the vertical column assembly terminal box and is connected to the terminal strip AMX# A1 TS1. See Illustration 11−12 and Table 11−1.

11-3-5 Horizontal Arm Brake Cable

1. The horizontal arm brake cable exits the left side of the horizontal arm outer tube and is ty−rapped to the bottom of the anode cable just below clamp point “H.” See Illustration 11−16.

ILLUSTRATION 11−16
HORIZONTAL ARM BRAKE ROUTING

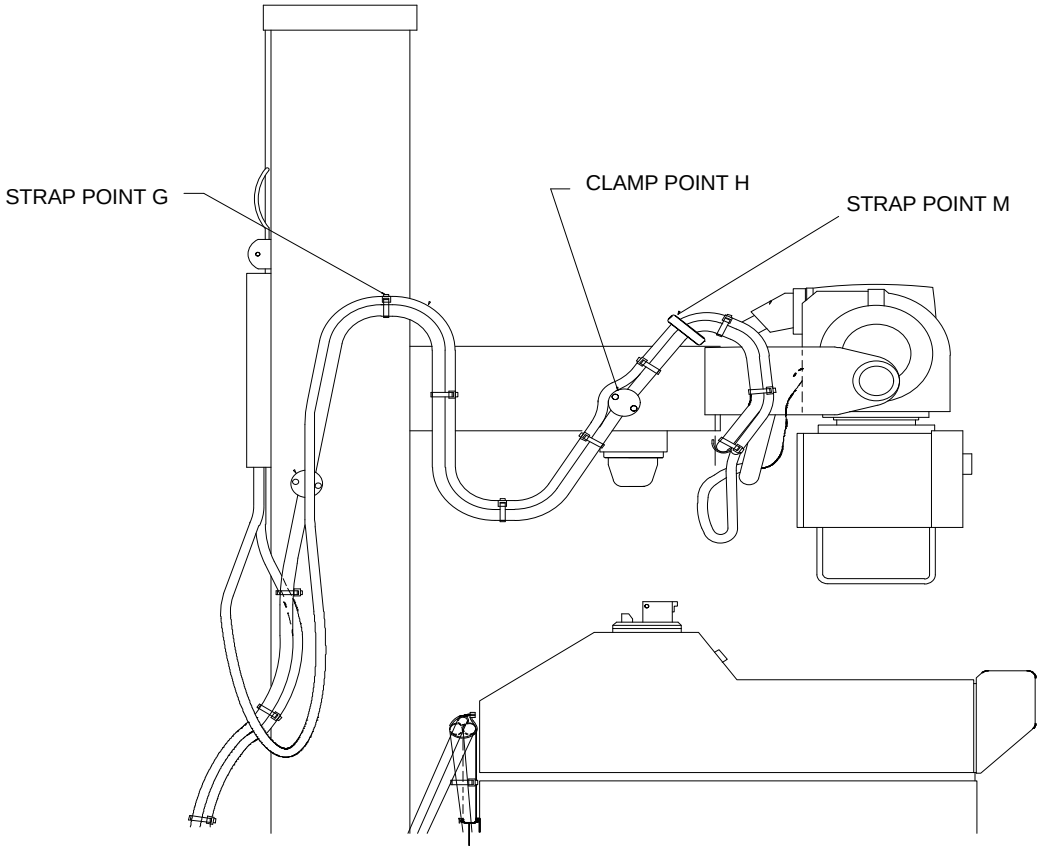

2. The cable continues from near clamp point “H” and is ty−rapped to the anode and stator cables at the locations shown in Illustration 11−16 until reaching strap point “G”.
3. There is a large loop after strap point “G” before the cable enters the bottom of the vertical column assembly terminal box and is connected to the terminal strip AMX3 A1 TS1. See Illustration 11−12 and Table 11−1.

11-3-6 Control Cable

The control cable exits the bottom of the terminal box on the rear of the vertical column assembly, passes beneath the anode cable and connects directly into the unit just below the anode and cathode cables. The cable is loosely draped to accommodate arm and column movements. See Illustration 11−17.

ILLUSTRATION 11−17
CONTROL CABLE ROUTING

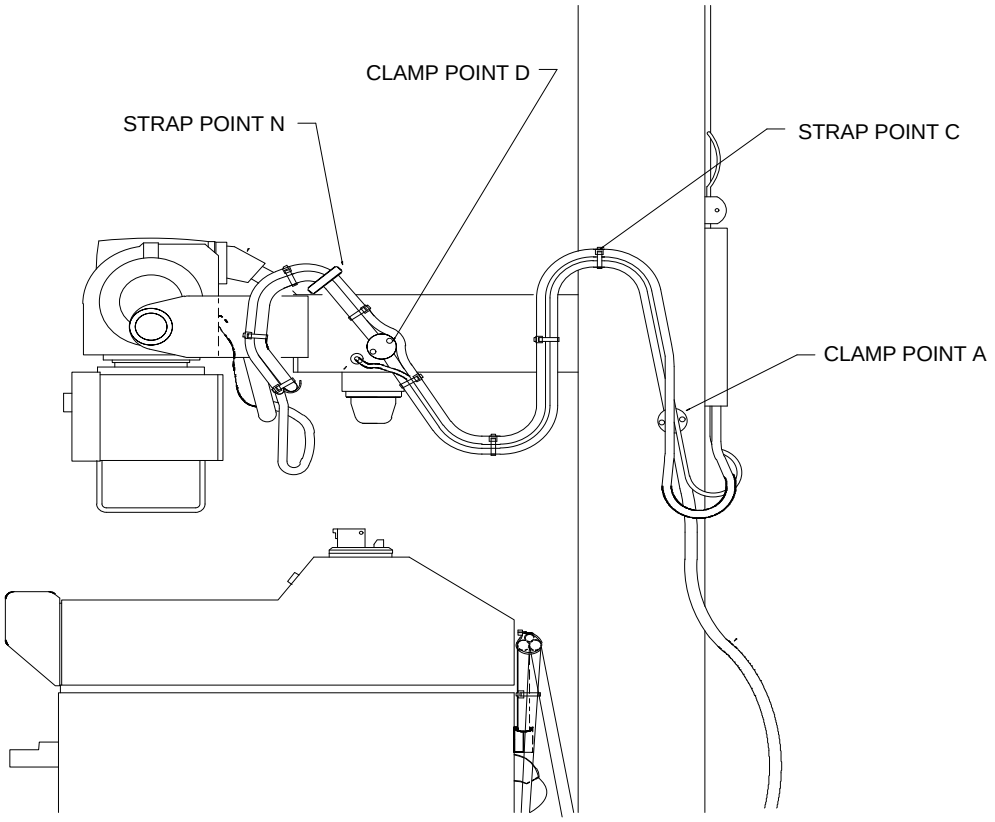

11-3-7 Vertical Column Brake Cable

1. The vertical column brake cable exits the side of the vertical column assembly and is routed to a channel on the rear of the column. See Illustration 11−18.

ILLUSTRATION 11−18
UPPER BRAKE CABLE ROUTE ON COLUMN

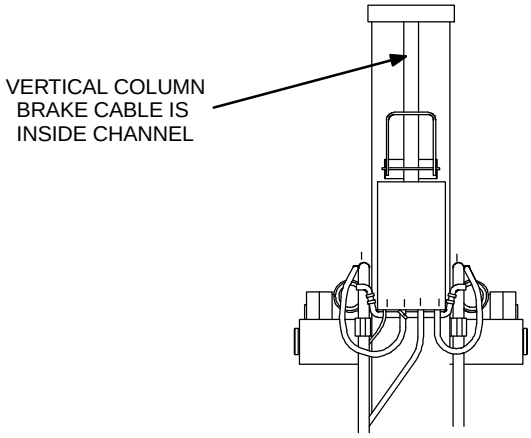

2. The brake cable enters the channel at the top of the vertical column assembly and continues down into the top of the terminal box and is connected to the terminal strip AMX3 A1 TS1. See Illustration 11−12 and Table 11−1.

SECTION 12 − HAND SWITCH CLEANING & DISINFECTING INSTRUCTIONS

SAFETY PRECAUTIONS − Before you begin:

- Disconnect the hand switch cord from the body of the hand switch before performing the maintenance / cleaning procedures
- Never use solvents or flammable solutions to clean the hand switch
- Never use dripping cloth (or) immerse hand switch in water or cleaning solutions

INSTRUCTION: Use a cloth moistened in warm soapy water (use mild soap) to clean the hand switch.

APPROVED CLEANERS:
The cleaners listed below are approved to clean the hand switch:

- Bleach − 50 % mix with water (5−8% household Bleach)
- Glutaraldehyde <5%
- Polyethylene Glycol <20% (tested as Cidex Plus 28)
- Isopropyl Alcohol 70% concentration
- Hydrogen Peroxide 15−40% concentration

CAUTION: Never use cleaners or solvents of any kind if you are uncertain of the nature of the cleaning agent. The hand switch should be cleaned using EPA cleared and EPA registered high−level disinfecting agents.

SECTION 13 − PERIODIC MAINTENANCE PROCEDURE FOR HAND SWITCH

Disconnect the cord from the body of the hand switch before performing the maintenance procedures.

Visual check:

- Inspect the cord for nicks, cuts or severe pinching of the cord sheath and inspect the cord for exposed wires at the RJ 11 connector due to sheath damage. If any of these conditions are observed, replace the cord.
- Inspect the hand switch for accumulation of dirt, contrast material, damage to the plastic housing or loosening in the plastic housing.

Functional check:

- Repeatedly press the hand switch buttons (Exposure/Prepare button and Collimator button) to check that the switch moves smoothly from inactive to active positions.
- Replace the hand switch if the buttons motion is not smooth or buttons getting stuck.

NOTE: The hand switch MUST be replaced at least once in every 3 years.

SECTION 14 − SERVICING THE SAFETY CONTACTOR ON THE X−RAY CONTROL MODULE

The replacement part for the safety contactor will come preassembled in the kit 5421992 with the copper straps installed in the correct orientation.

WARNING

Warning: It is essential to safety that the location of the copper straps on the contactor not be changed!

WARNING

Warning: It is essential to safety that the leads for the contactor be connected as shown in the picture below!

If either of the above warnings is not followed, there is an increased risk of shorting the batteries across the contactor resulting in a fire.

ILLUSTRATION 11−19
SAFETY CONTACTOR CONNECTIONS

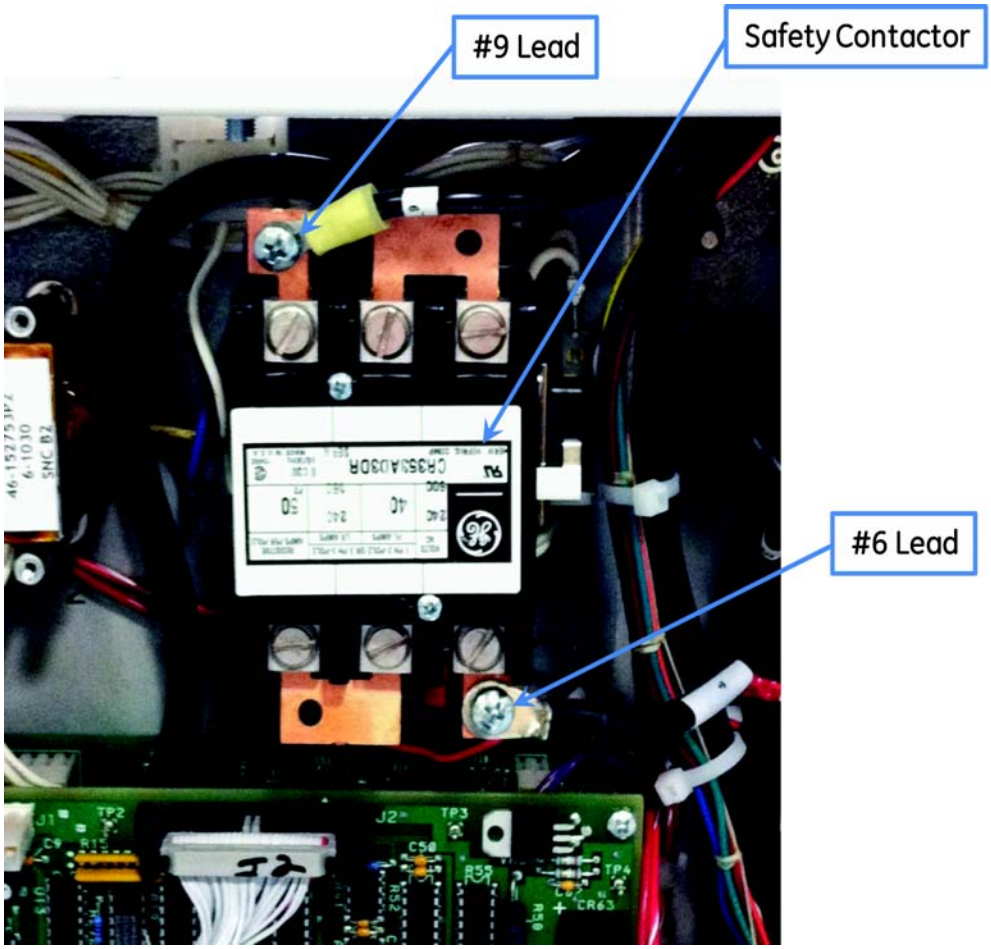

GE Healthcare

GE Healthcare: Telex 3797371
P.O. Box 414, Milwaukee, Wisconsin 53201 U.S.A.
(Asia, Pacific, Latin America, North America)

GE Healthcare — Europe: Telex 698626
283, rue de la Miniére, B.P. 34, 78533 Buc Cedex
France