GE Medical Systems

Technical Publications

P9030FB
Revision 1

RT6000 / RT6800 Service Manual

Copyright© 1989 By General Electric Company

Operating Documentation

LIST OF EFFECTIVE PAGES

REVISION	DATE
REV 0	December 29, 1989
REV 1	September 28,1990

PAGE	REV
Title page	1
GE Logo page	–
A	1
i to ii	0
iii to v	1
vi	0
vii to ix	1
INTRODUCTION	
i	0
1–1	0
PREINSTALLATION	
i	0
2–1 to 2–3	0
2–4	t
2–5	0
2–6 to 2–7	1
2–8 to 2–9	0
INSTALLATION	
i	0
3–1 to 3–11	0
FUNCTIONAL CHECKS	
i to ii	0
4–1 to 4–24	0
4–25	1
4–26 to 4–43	0
THEORY	
i to ii	1
5–1 to 5–5	0
5–6 to 5–67	1
SERVICE ADJUSTMENTS	
i	0
6–1 to 6–5	0
SCHEMATICS	
i	0
7–1 to 7–5	1
DIAGNOSTICS	
i	0
8–1	0
RENEWAL PARTS	
i	1
9–1 to 9–59	1
PERIODIC MAINTENANCE	
i	0
10–1	0

TABLE OF CONTENTS

SECTION	TITLE	PAGE
TABLE OF CONTENTS		i
LIST OF ILLUSTRATIONS		vii
LIST OF TABLES		VIII

CHAPTER 1 – INTRODUCTION

1–1	SERVICE MANUAL CONTENTS	1–1

CHAPTER 2 – PREINSTALLATION

2–1	FORWARD	2–1
2–2	GENERAL DESCRIPTION	2–1
	2–2–1 Ultrasound Imaging	2–1
	2–2–2 Doppler Feature	2–1
	2–2–3 Imaging Functions	2–1
2–3	ELECTRICAL SPECIFICATIONS	2–3
	2–3–1 Power Supply	2–3
	2–3–2 Leakage Current	2–3
	2–3–3 Power Line Requirements	2–3
	2–3–4 Transient Protection	2–3
	2–3–5 Facility Power Receptacle	2–4
2–4	PHYSICAL SPECIFICATIONS	2–4
	2–4–1 Operating Conditions	2–4
	2–4–2 Shipping and Storage Requirements	2–6
2–5	RECOMMENDED ULTRASOUND ROOM LAYOUT	2–6
	2–5–1 Optional Desirable Ultrasound Room Facilities	2–7
	2–5–2 Floor Loading	2–7
	2–5–3 Recommended and Alternate Ultrasound Console Floor Plans	2–7

CHAPTER 3 – INSTALLATION

3–1	INTRODUCTION	3–1
3–2	AVERAGE INSTALLATION TIME	3–1
3–3	WARNINGS	3–1

SECTION TITLE PAGE

CHAPTER 3 – INSTALLATION (Continued)

3–4 EQUIPMENT INSPECTION/DAMAGE REPORTING 3–5
3–4–1 U.S. Operations 3–5
3–4–2 International Operations 3–6
3–4–3 Claim Procedure 3–6

3–5 UNPACKING RT 6000/RT 6800 COMPONENTS 3–6
3–5–1 Normal Unpacking Procedure 3–6

3–6 ASSEMBLING THE RT 6000/RT 6800 3–7

3–7 MOVING THE RT 6000/RT 6800 3–7
3–7–1 Moving the RT 6000/RT 6800 To Another Room 3–7
3–7–2 Transporting the RT 6000/RT 6800 3–8

3–8 ELECTRICAL SAFETY TESTS 3–8
3–8–1 Leakage Current 3–8
3–8–2 Ground Continuity 3–8
3–8–3 Facility Power Wiring Test 3–8
3–8–4 Transducer Source Leakage Current 3–9
3–8–5 Chassis Source Leakage Current Test 3–10
3–8–6 Ground Continuity Test 3–11

CHAPTER 4 – FUNCTIONAL CHECKS

4–1 INTRODUCTION 4–1
4–1–1 Required Equipment 4–1

4–2 FUNCTIONAL CHECK PROCEDURES 4–1
4–2–1 Power Up Check 4–1
4–2–2 Acoustic Power (%) Potentiometer 4–2
4–2–3 Sector Angle Switch 4–2
4–2–4 Frame Averaging 4–3
4–2–5 Illumination Control 4–3
4–2–6 ECG Off/On Control (Units W/ECG Option Only) 4–3
4–2–7 ECG Units: ECG Gain . . . . . 4~
4–2–8 ECG Units: Sync 1/Sync 2 Controls 4–4
4–2–9 ECG Units: ECG Video/SCR Position Potentiometers 4–6
4–2–10 PCG Units: PCG Off/On Switch: PCG Gain Pot 4–7
4–2–11 PCG Units: PCG Gain/Filter checks 4–8
4–2–12 Auxiliary Option Units Only: AUX1 Controls 4–9
4–2–13 Auxiliary Option Units Only: AUX2 Controls 4–10
4–2–14 Gen Meas and Gen Calc Controls 4–10
4–2–15 L, R, Proc Controls 4–11
4–2–16 Mic Control (Perform if headphones available) 4–15
4–2–17 Display Block 4–15

SECTION TITLE PAGE

CHAPTER 4 – FUNCTIONAL CHECKS (Continued)

4–2 FUNCTIONAL CHECK PROCEDURES (Contineud)
4–2–18 Image Block 4–15
4–2–19 Time Gain Compensation (TGC) Controls 4–16
4–2–20 Auto Control 4–17
4–2–21 Mode Controls 4–17
4–2–22 Program Control 4–18
4–2–23 Sweep Speed, Pause, Update, Freeze Controls 4–18
4–2–24 Circ/Area: Distance/Depth Controls 4–19
4–2–25 Doppler Units: Doppler Controls 4–19
4–2–26 VTR (VCR) Equipped Units Only: Front panel VTR Controls 4–22
4–2–27 SCR (LSR) Equipped Units Only: SCR Controls 4–22
4–2–28 Date Change Test 4–23
4–2–29 Time Change Check 4–23
4–2–30 Hospital Name Check 4–24
4–2–31 Polaroid Equipped Units Only: Film Development Beep Time Check . . 4–24
4–2–32 System Parameter Test 4–25
4–2–33 Transducer Parameter Display Test 4–25
4–2–34 Abbreviation Display Test 4–25
4–2–35 Echo Level Measurement (in Traced Area) Test 4–25
4–2–36 Echo Level Measurement (Within 3 mm Box) Test 4–26
4–2–37 Echo Level Histogram (For Traced Area) Test 4–26
4–2–38 Echo Level Histogram (3 mm Box: Histogram) Test 4–27
4–2–39 Gray Background Level Test 4–28
4–2–40 2D Gray Background Level Control Test 4–28
4–2–41 M—mode Gray Background Level Control Test 4–28
4–2–42 Doppler Units: Doppler Gray Background Level Control Test 4–29
4–2–43 Help Menu Test 4–29
4–2–44 2D Image Invert Control Test 4–30
4–2–45 Doppler Units: Doppler Image Invert Control Test 4–30
4–2–46 M—mode Image Inversion Test 4–31
4–2–47 SCR Equipped Units Only: SCR PRINT (Comments on Stripchart) Test 4–31
4–2–48 SCR Equipped Units Only: SCR PRINT (“FREEZE” KEY) Test 4–32
4–2–49 SCR Equipped Units Only: SCR PRINT (Page Print after Strip Chart Recording) Test 4–32
4–2–50 VCR Equipped Units Only: VCR Search Speed Test 4–32
4–2–51 2D Image Size Test 4–33
4–2–52 SECTOR/PRGM Test 4–33
4–2–53 Acoustic Power Display Test 4–34
4–2–54 Error Display Time Test 4–34
4–2–55 Doppler Units: Doppler Frequency Marker Test 4–35
4–2–56 2D Transducer Parameter Test 4–35
4–2–57 M—Mode Parameter Preset Test 4–35
4–2–58 Doppler Units: Doppler Parameter Preset Test 4–36

SECTION TITLE PAGE

CHAPTER 4 – FUNCTIONAL CHECKS (Continued)

4–2 FUNCTIONAL CHECK PROCEDURES (Continued)
4–2–59 Dotted Line Between Measurement Cursors Test 4–37
4–2–60 Register Abbreviations Test 4–37
4–2–61 Register Footswitch Test 4–37
4–2–62 35 mm Polaroid/35 mm Equipped Units Only: Register Record by Polaroid/35 mm Test 4–38
4–2–63 Pattern Package Test 4–38
4–2–64 M—Mode Peak Hold Control Test 4–39
4–2–65 2D Edge Enhancement Test 4–39
4–2–66 M—Mode Edge Enhancement Test 4–40
4–2–67 SCR Equipped Units Only: SCR Edge Enhancement Test 4–40
4–2–68 2D Echo Limiter Test: (Phantom Required) 4–41
4–2–69 M—Mode Echo Limiter Test 4–41
4–2–70 2D Grayscale Mapping Test 4–42
4–2–71 M—Mode Grayscale Mapping Test 4–42

CHAPTER 5–THEORY

5–1 INTRODUCTION 5–1
5–1–1 Cardiographic Scanner 5–1
5–1–2 Scanning Functions 5–1

5–2 PRINCIPLES OF ULTRASOUND IMAGING 5–1
5–2–1 Ultrasound Wave Travel 5–1
5–2–2 Reflection 5–1
5–2–3 Ultrasound Display Types 5–2
5–2–4 Beam Focusing 5–4
5–2–5 Echo Signal Processing 5–4
5–2–6 Time Gain Compensation (TGC)/Time Frequency Compensation (TFC) 5–4
5–2–7 Doppler Operation 5–4
5–2–8 Optional Color Flow Operation 5–5

5–3 RT 6000/RT 6800 SYSTEM DESCRIPTION 5–8
5–3–1 RT 6000/RT 6800 Card Cage 5–9
5–3–2 System Block Diagram 5–10

5–4 PC BOARD ASSY DESCRIPTIONS 5–14
5–4–1 Transmitter (TRA) Assy 5–15
5–4–2 High Voltage Power Supply Assy 5–15
5–4–3 Primary Delay Sum (PDS) Assy 5–17
5–4–4 Continuous Dynamic Aperture & Focus (CDAF) Assy 5–18
5–4–5 Crosspoint Switch (XPSW) Assy 5–19
5–4–6 Logarithmic Amplifier (LOG) Assy 5–20
5–4–7 Color Scan Converter Controller (CSCC) Assy 5–23

SECTION TITLE PAGE

CHAPTER 5 – THEORY (Continued)

5–4 PC BOARD ASSY DESCRIPTIONS (Continued) 5–14
5–4–8 Frame Memory 3 (FM3) Assy 5–28
5–4–9 Color Video (CVDO) Assy 5–29
5–4–10 Master Controller (MST) Assy 5–34
5–4–11 Input/Output Processor (IOP) Assy 5–38
5–4–12 Input/Output Connector (I/O CONN) Assy 5–41
5–4–13 Real Time Controller (RTC) 5–42
5–4–14 Color Doppler (CDOP) Assy (Optional) 5–44
5–4–15 Audio Assy 5–47
5–4–16 Fast Fourier Transform (FFT) Assy 5–50
5–4–17 Physiological Signal Isolation Amplifier (PSIA) 5–52
5–4–18 Physiological Signal Scale Amplifier 2 (PSSA2) Assy 5–54
5–4–19 Waveform Display 2 (WD2) Assy 5–56
5–4–20 Recorder Scan Converter (RSC) Assy 5–57
5–4–21 Video Tape Recorder Playback (VTR PB) Assy 5–62
5–4–22 Connector (CONN) Assy 5–66

CHAPTER 6 – SERVICE ADJUSTMENTS

6–1 INTRODUCTION 6–1

6–2 POWER SUPPLY ADJUSTMENTS 6–1
6–2–1 Power Supply Access 6–1
6–2–2 5 V, 30 A Power Supply PS0 Adjustment 6–3
6–2–3 5 V, 30 A Power Supply PS1 Adjustment 6–3
6–2–4 5 V,10 A Power Supply PS2 Adjustment 6–4
6–2–5 15 V, 4 A Power Supply PS3 Adjustment 6–4
6–2–6 —15 V, 4 A Power Supply PS4 Adjustment 6–5
6–2–7 —5 V, 20 A Power Supply PS5 Adjustment 6–5
6–2–8 12 V, 2.5 A Power Supply PS6 Adjustment 6–5

CHAPTER 7 – SCHEMATICS

7–1 OPERATOR CONSOLE ASSY (RT 6000/RT 6800) 7–1

CHAPTER 8 – DIAGNOSTICS

8–1 INTRODUCTION 8–1
8–1–1 Test Patterns 8–1

8–2 PROCEDURE 8–1

SECTION TITLE PAGE

CHAPTER 9 RENEWAL PARTS

RT 6000/RT 6800 . . . . . 9−1
OPERATOR CSL ASSY . . . . . 9−2
VIDEO DISPLAY MONITOR ASSY . 9−27
CROSS REFERENCE . . . . . 9−31
T3 NUMBERS . . . . . 9−33

CHAPTER 10 − PERIODIC MAINTENANCE

10−1 INTRODUCTION . . . . . 10−1
10−1−1 Periodic Maintenance . 10−1
10−1−2 Reference Chapters . . . 10−1

10−2 PERIODIC MAINTENANCE PROCEDURE . . . . . 10−1

LIST OF ILLUSTRATIONS

SECTION		TITLE	PAGE
		CHAPTER 2 – PREINSTALLATION	
2–2	2–1	RT 6000/RT 6800 PICTORIAL VIEW	2–2
2–4	2–2	RT 6000/RT 6800 DIMENSIONS	2–5
2–5	2–3	RECOMMENDED ULTRASOUND FLOOR PLAN	2–8
	2–4	ALTERNATE, SPACE SAVING ULTRASOUND FLOOR PLAN	2–9
		CHAPTER 4 – FUNCTIONAL CHECKS	
4–2	4–1	SUB PANEL	4–2
	4–2	SECTOR PATTERN	4–2
	4–3	ECG PATTERN–1	4–4
	4–4	ECG PATTERN–2	4–5
	4–5	SYNC 1	4–5
	4–6	SYNC 1 AND SYNC 2	4–6
	4–7	PCG TEST SIGNAL	4–8
	4–8	AUX1/AUX2 TEST PATTERN	4–10
	4–9a	CARDIAC PATTERNS–1	4–12
	4–9b	CARDIAC PATTERNS–2	4–13
	4–10	CARDIAC PATTERN–3	4–14
	4–11	PROC CONTROL	4–14
		CHAPTER 5 – THEORY	
5–1	5–1	ILLUSTRATION	5–3
	5–2	COLOR FLOW MAPPING SUBSYSTEM	5–6 to 5–7
	5–3	RT 6000/RT 6800 MAJOR COMPONENTS	5–8

LIST OF ILLUSTRATIONS (Continued)

SECTION		TITLE	PAGE

CHAPTER 5 — THEORY (Continued)

5−1	5−4	RT 6000/RT 6800 SYSTEM BLOCK DIAGRAM	5−12 to 5−13
	5−5	TRANSMITTER ASSEMBLY BLOCK DIAGRAM	5−15
	5−6	HIGH VOLTAGE (HV) POWER SUPPLY BLOCK DIAGRAM	5−16
	5−7	PRIMARY DELAY SUM (PDS) ASSY BLOCK DIAGRAM	5−17
	5−8	CDAF ASSY BLOCK DIAGRAM	5−19
	5−9	CROSSPOINT SWITCH (XPSW) ASSY BLOCK DIAGRAM	5−20
	5−10	LOGARITHMIC AMPLIFIER (LOG) BLOCK DIAGRAM	5−22
	5−11	CSCC ASSY BLOCK DIAGRAM	5−24 to 5−25
	5−12	CBFM ASSY BLOCK DIAGRAM	5−27
	5−13	FRAME MEMORY 3 (FM3) BLOCK DIAGRAM	5−29
	5−14	CVDO ASSY BLOCK DIAGRAM	5−32 to 5−33
	5−15	MASTER CONTROLLER (MST) ASSY BLOCK DIAGRAM	5−36 to 5−37
	5−16	IOP ASSY BLOCK DIAGRAM	5−40
	5−17	I/O CONNECTOR ASSY BLOCK DIAGRAM	5−41
	5−18	RTC ASSY BLOCK DIAGRAM	5−43
	5−19	COLOR DOPPLER ASSY BLOCK DIAGRAM	5−46
	5−20	AUDIO ASSY BLOCK DIAGRAM	5−48 to 5−49
	5−21	FAST FOURIER TRANSFORM (FFT) ASSY BLOCK DIAGRAM	5−51
	5−22	PSIA ASSY BLOCK DIAGRAM	5−53
	5−23	PSSA2 ASSY BLOCK DIAGRAM	5−55
	5−24	WAVEFORM DISPLAY 2 (WD2) ASSY BLOCK DIAGRAM	5−57
	5−25	RECORDER SCAN CONVERTER (RSC) ASSY BLOCK DIAGRAM	5−60 to 5−61
	5−26	VTR PB ASSY BLOCK DIAGRAM	5−64 to 5−65
	5−27	CONNECTOR (CONN) ASSY BLOCK DIAGRAM	5−67

CHAPTER 6 − SERVICE ADJUSTMENTS

6−2	6−1a	POWER SUPPLY COVER REMOVAL	6−2
	6−1b	LOCATION OF RT 6000/RT 6800 POWER SUPPLIES	6−2
	6−2	RT 6000/RT 6800 POWER SUPPLIES (RIGHTHAND SIDE VIEW)	6−3
	6−3	RT 6000/RT 6800 POWER SUPPLY (REAR VIEW)	6−4
	6−4	RT 6000/RT 6800 POWER SUPPLIES (LEFTHAND SIDE VIEW)	6−5

LIST OF TABLES

SECTION		TITLE	PAGE
CHAPTER 2 – PREINSTALLATION			
2–4	2–1	SHIPPING REQUIREMENTS	2–6
2–5	2–2	ULTRASOUND ROOM REQUIREMENTS	2–6
CHAPTER 3 – INSTALLATION			
3–3	3–1	RT 6000/RT 6800 INSTALLATION CHECKLIST	3–1
3–4	3–2	DOMESTIC SHIPPING DAMAGE REPORTING	3–5
3–8	3–3	TRANSDUCER SOURCE LEAKAGE CURRENT TEST	3–9
	3–4	CHASSIS SOURCE LEAKAGE CURRENT TEST	3–10
CHAPTER 5 – THEORY			
5–3	5–1	PC BOARD LOCATIONS	5–9
	5–2	RT 6000/RT 6800 SUBSYSTEMS	5–10

1 – 1 SERVICE MANUAL CONTENTS

This manual provides service information on the RT 6000/RT 6800 Echocardiographic Ultrasound Scanning System. It contains the following chapters:

1. **Chapter 2, Preinstallation:** Contains physical and electrical requirements that should be considered prior to installation;
2. **Chapter 3, Installation:** Contains a complete RT6000/RT6800 installation procedure with installation checklist;
3. **Chapter 4, Functional Checks:** Contains functional checks that should be performed as part of the installation, or as required during servicing and periodic maintenance;
4. **Chapter 5, Theory of Operation:** Contains functional explanations of the RT 6000/RT 6800 electronics;
5. **Chapter 6, Service Adjustments:** Contains adjustment procedures for all field adjustable RT 6000/RT 6800 potentiometers and other adjustable elements;
6. **Chapter 7, Schematics:** Contains copies of the RT 6000/RT 6800 schematics;
7. **Chapter 8, Diagnostics:** Contains troubleshooting information for the analog and digital sections of the RT 6000/RT6800;
8. **Chapter 9, Parts List:** Contains a complete list of replacement parts for the RT 6000/RT 6800;
9. **Chapter 10, Periodic Maintenance:** Provides periodic maintenance procedures for the RT 6000/RT 6800.

2–1 FORWARD

This chapter describes various general electrical, operational, and environmental considerations that should be considered before installing the RT 6000/RT 6800 Ultrasound Unit.

2–2 GENERAL DESCRIPTION

The RT 6000/RT 6800 is an echocardiographic ultrasound scanner designed to aid the physician in diagnosing cardiovascular diseases. See Illustration 2—1 for a pictorial view of the machine.

2–2–1 Ultrasound Imaging

RT 6000/RT 6800 allows the physician to “see into” the patient’s body, using high frequency ultrasound imaging. When the physician places the transduceron a patient’s skin, acoustic pulses are transmitted into the body, reflected, and returned to the transducer. These returns, called echoes, are processed, amplified, and projected on a video monitor to form an image of the area scanned in the patient’s body. (A video tape recorder, Page Printer and Cinevision are available as options for permanently recording the image).

2–2–2 Doppler Feature

The Doppler feature permits the physician to analyze blood flow velocity, pressure, heart valve leakage, and other cardiac parameters by focusing the transducer beam on an area of blood flow. It then determines the amplitude and frequency shifts of the returning echoes and correlates these to blood volume, flow velocity and flow direction.

2–2–3 Imaging Functions

All necessary imaging functions are performed by the RT 6000/RT 6800 console and its transducers. The console front panel contains operator controls for optimizing the image and a keyboard for entering data onto the image. Selected key LEDs illuminate when their respective key is pressed. Unacceptable keyboard entries trigger a beeper alarm. In addition, a graphics controller central processing unit automatically superimposes certain machine parameters over the edges of the image.

2−2−3 Imaging Functions (continued)

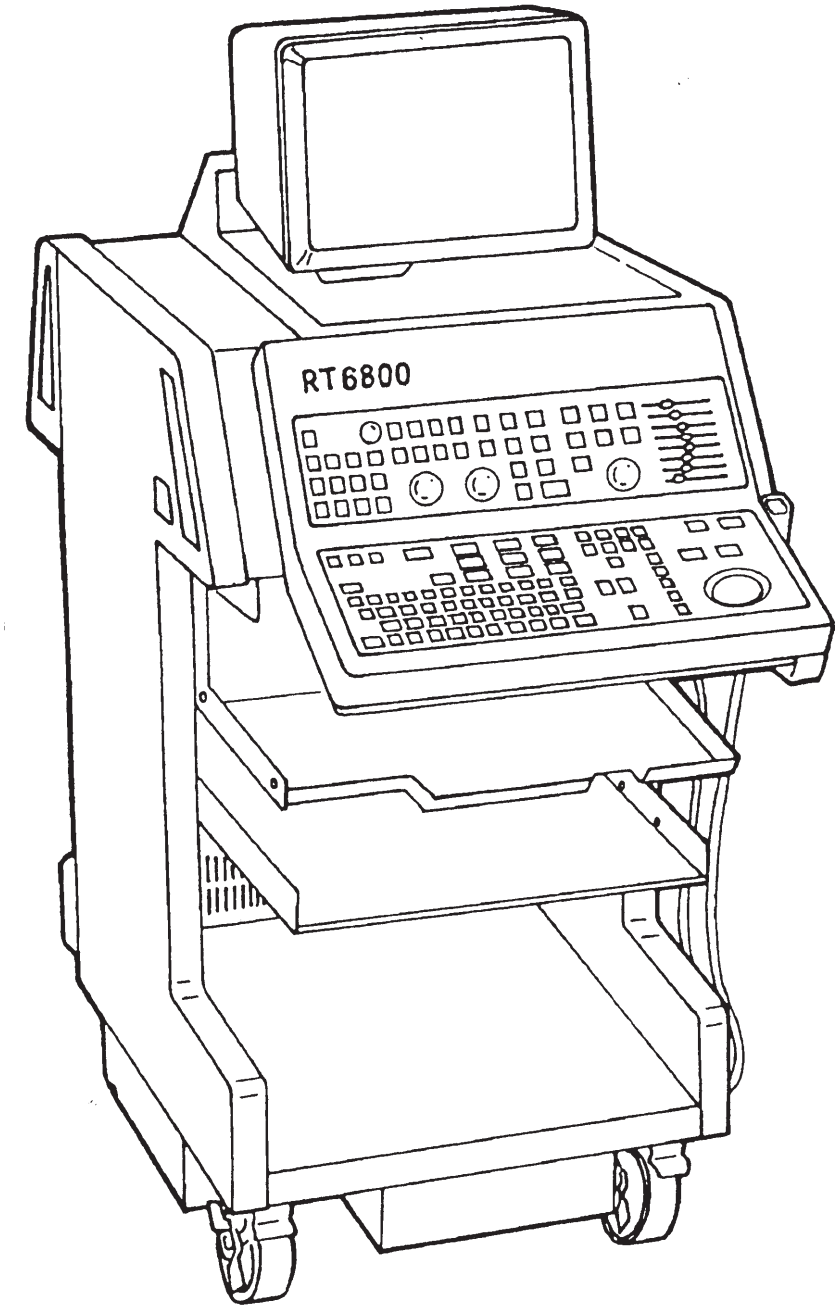

RT 6000/RT 6800 PICTORIAL VIEW
ILLUSTRATION 2−1

2–3 ELECTRICAL SPECIFICATIONS

Electrical conduit, junction boxes, outlets, circuit breakers, and switches should be in place before installing the RT 6000/RT 6800 Console.

2–3–1 Power Supply

The RT 6000/RT 6800 operates on 115 or 220 VAC, single phase, 48 to 63 Hz power. Maximum current consumption is 14 amps at 115 VAC, and 7 amps at 220 VAC. The 115 VAC main circuit breaker is rated at 15A; the 220 VAC version at 10A. Voltage setup is performed in the factory, because different rear panels containing different power cables and circuit breakers are used for the 115 VAC and 220 VAC versions.

2–3–2 Leakage Current

Total ground leakage from any exposed conductive surface to ground is less than 100 microamps (For UL 544). Total ground leakage is less than 500 microamps (For 220V). Patient leakage current is less than 10 microamps. (These parameters are checked during installation). The RT 6000/RT 6800 is classified as Class I, type BF equipment in accordance with IEC—601—1.

2–3–3 Power Line Requirements

The following power line parameters should be monitored for one week before installation. We recommend that you use a Dranetz Model 605—3 Power Line Monitor with option 101:

PARAMETER	:	LIMITS
Voltage Range	: U.S.	: 103–127 VAC
	: Europe	: 206–254 VAC
	: Far East	: 90–110 VAC
Line Frequency	: All applications	: 50/60Hz (+/– 2Hz)
Power Transients	: Less than 25 % of nominal peak voltage for less than 1 millisecond for any type of transient, including line frequency, synchronous, asynchronous, or aperiodic transients.	
Decaying Oscillation	: Less than 15 % of peak voltage for less than 1 millisecond.	

2–3–4 Transient Protection

If testing indicates excessive transients occur, we recommend you use a transient suppressor, such as the Isolatrol Model LAI—115 made by Control Concept Corporation.

2–3–5 Facillty Power Receptacle

A separate poweroutletwith a 15 amp circuit breaker for 115 VAC units, or a 10 amp circuit breaker for 220 VAC units, is recommended. The specific power receptacle used depends on your country's power line standards.

For U.S. applications, use an Underwriters Laboratory (UL) approved receptacle, such as the Hubbell 8300 three—wire grounded type. For Canadian applications, the receptacle should be approved by the Canadian Standards Association (CSA). For other countries, the receptacle should have International Electrotechnical Commission (IEC) approval.

2–4 PHYSICAL SPECIFICATIONS

The RT 6000/RT 6800 (excluding accessories) weighs 441 Ibs (200 kg). Refer to Illustration 2—2 for dimensions.

2–4–1 OperatIng Conditions

The RT 6000/RT 6800 is designed to operate within a temperature range of 50 degrees F to 104 degrees F (10 degrees C to 40 degrees C), and a relative humidity range of 10% to 85%. (Non–condensing).

Patient Comfort

Despite permissible operating temperature and humidity tolerances, we recommend that ambient room temperature be maintained between 68 and 79 degrees F (20 to 26 degrees C), Humidity should be maintained between 50% and 70% for patient comfort during ultrasound scanning.

Electromagnetic Interference (EMI)

In general, the maximum EMI noise Field Strength Intensity should be no more than 100 dB uV/m within the 10 kHz to 100 MHz frequency range, as measured three meters from the RT 6000/RT 6800. If there is reason for concern, we recommend that you measure EMI using a spectrum analyzer.

1. EMI sources should be located and their effects minimized. These noise sources include microwave ovens, certain types of electronic surgical equipment, and digital equipment such as desk top computers and terminals, gel warmers, and AM radio broadcast sources.

2. Keep the RT 6000/RT 6800 at least 15 feet (approximately five meters) away from the above noise sources; preferably in another room since wood or plaster walls, doors, floors, and ceilings provide some EMI shielding. Special EMI shielding may be required to eliminate noise problems caused by high frequency, high powered radio or video broadcast signals.

2–4–1 Operating Conditions (continued)

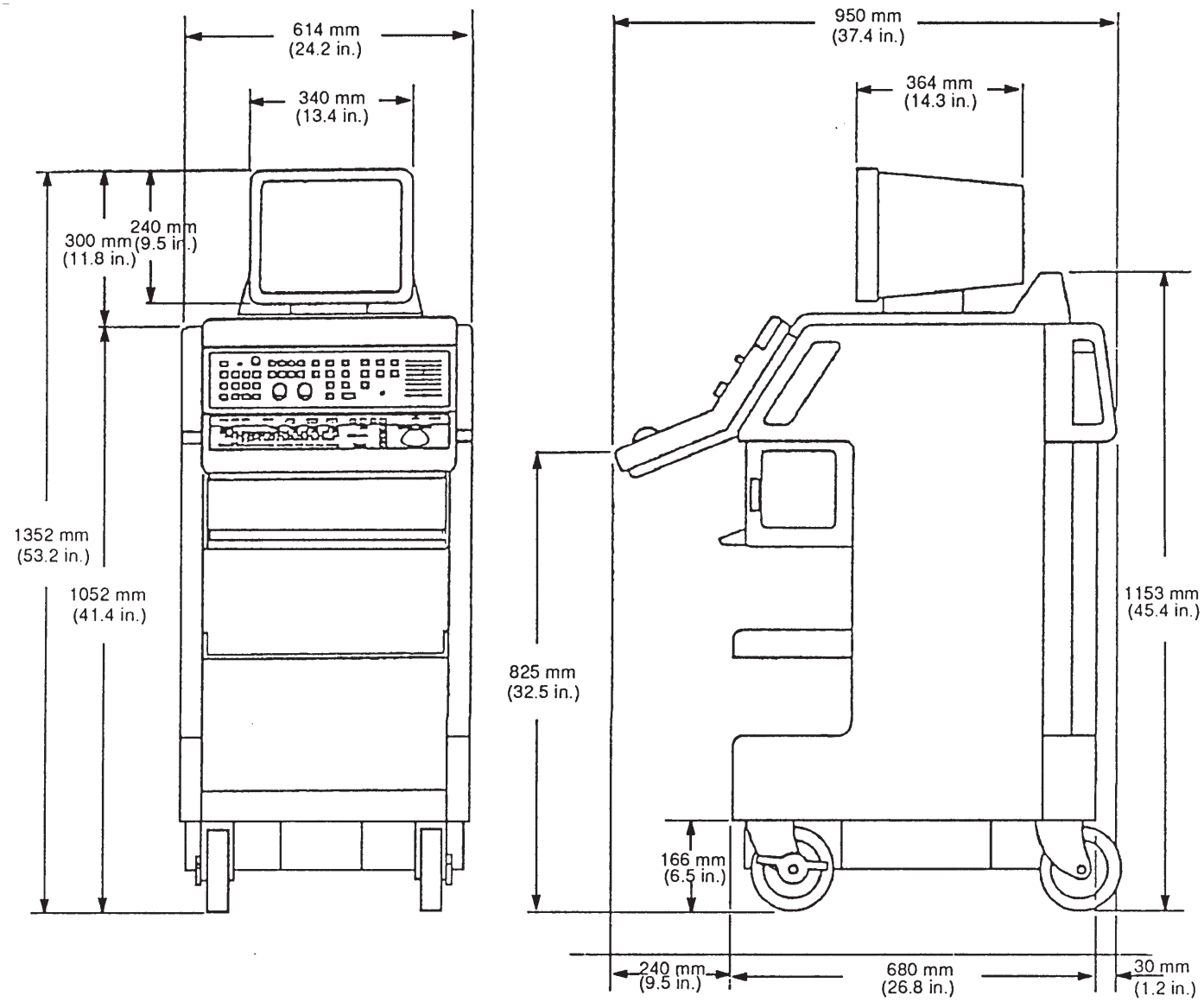

RT 6000/RT 6800 DIMENSIONS
ILLUSTRATION 2–2

2–4–2 Shipping and Storage Requirements

The RT 6000/RT 6800 excluding PROBES is shipped in a single container. Shipping weight is approximately 463 lbs (250 kg). The size of the container is 43 in. x 30.5 in. x 55.5 in. (109 cm x 77 cm x 141 cm). The container can pass through a standard door having a 30 in. x 60 in. (76 cm x 152 cm) opening. Table 2—1 provides a summary of temperature, altitude, and humidity tolerances for shipping, installation, and operation:

TABLE 2–1
SHIPPING REQUIREMENTS

PARAMETER	STORAGE	SHIPPING	INSTALLATION	OPERATION
TEMPERATURE (DEG.C) (DEG.F)	–4.4 to 60 –40 to 140	–4.4 to 60 –40 to 140	15.6 to 60 60 to 140	15.6 to 25 60 to 77
MAX. ALTITUDE (M) (FT)	2700 8000	(50~1060mbar)	2700 8000	1200 4000
HUMIDITY (%)	10 to 85	10 to 85	10 to 85	20 to 80

2–5 RECOMMENDED ULTRASOUND ROOM LAYOUT

Table 2—2 provides the requirements for an ultrasound room:

TABLE 2–2
ULTRASOUND ROOM REQUIREMENTS

MIN. FLOOR AREA	130 SQ FT (12 SQ M)
POWER SOURCE	115VAC, 60HZ or 220VAC, 50HZ, SINGLE PHASE
CURRENT RATING	15A (115V) ; 10A (220V) CIRCUIT BREAKER
RADIATION SHIELDING	NONE REQUIRED for ULTRASOUND ENERGY
TEMPERATURE	68–79 DEG F (20–26 DEG. C) for PATIENT COMFORT
HUMIDITY	50% to 70% for PATIENT COMFORT
HEAT DISSIPATION	1000 BTU/Hr for RT6000/RT6800 ; 300 BTU/Hr per PERSON
FLOOR LOADING	480kg/m² ~ 640kg/m²

2–5–1 Optional Desirable Ultrasound Room Facilities

These facilities are:

1. Lab sink with hot and cold water;
2. Emergency oxygen supply;
3. Dimmer control for overhead lights;
4. Film viewer;
5. Film and linen storage;
6. Medical equipment storage;
7. Hospital grade equipment electrical outlet;
8. Power outlets for auxiliary equipment;
9. Document storage area for operating and service manuals;
10. Nearby waiting room, dressing room, lavatory;
11. Trash bin.

2–5–2 Floor Loading

The floor must be capable of supporting the RT 6000/RT 6800 Console, which weighs 441 lbs to 586 lbs, depending on options added. The floor load is calculated from the floor space taken up by the RT6000/RT6800, which is approximately 0.418 m^2. The floor load is approximately 480 $kg/m^2 \sim 640$ kg/m^2.

2–5–3 Recommended and Alternate Ultrasound Console Floor Plans

Illustration 2–3 provides a recommended standard floor plan for ultrasound equipment, while Illustration 2–4 provides an alternate, space saving floor plan for corner placement of ultrasound equipment.

2–5–3 Recommended and Alternate Ultrasound Console Floor Plans (continued)

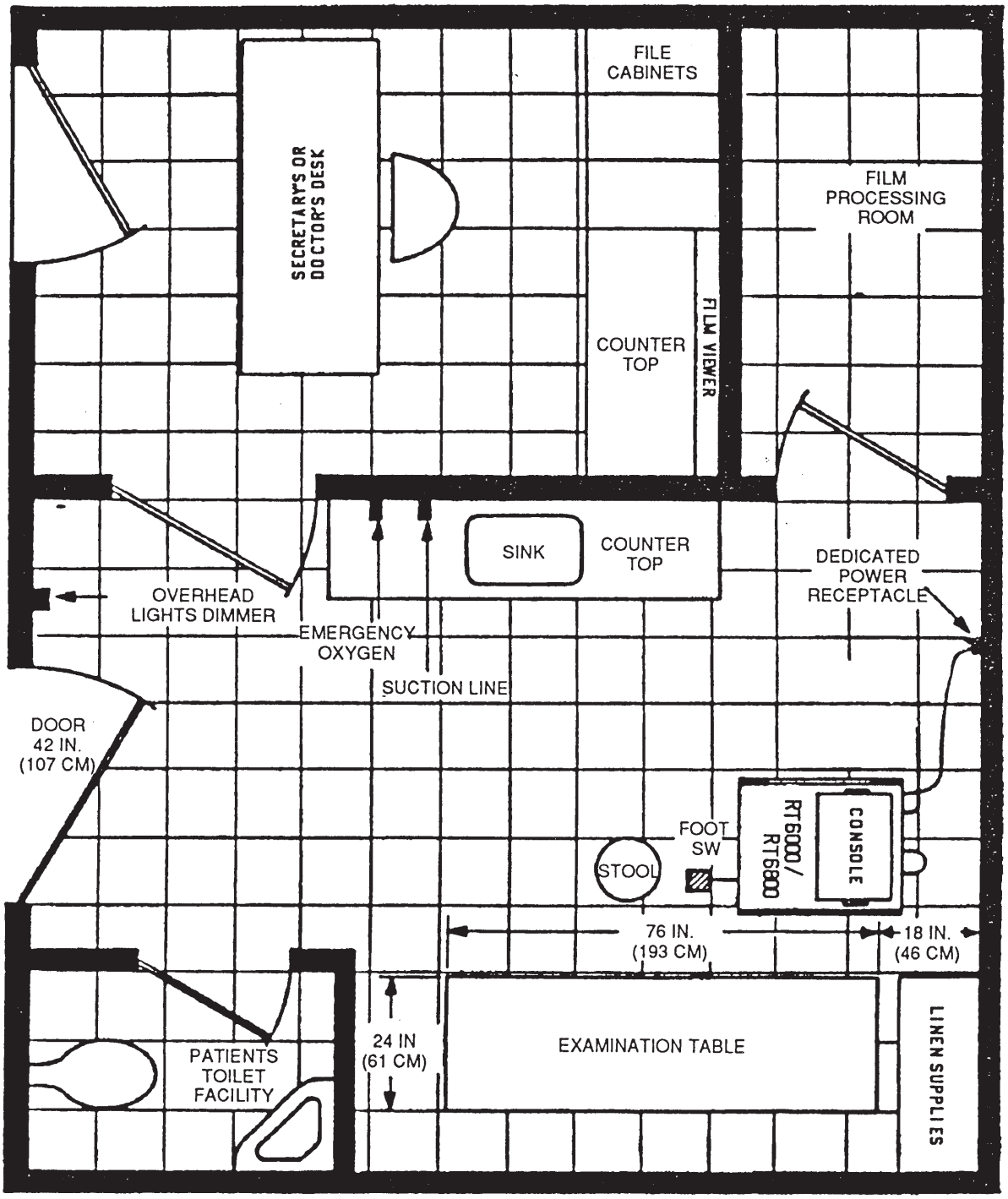

Scale : Each Square Equals One Square Foot

RECOMMENDED ULTRASOUND FLOOR PLAN
ILLUSTRATION 2–3

2–5–3 Recommended and Alternate Ultrasound Console Floor Plans (continued)

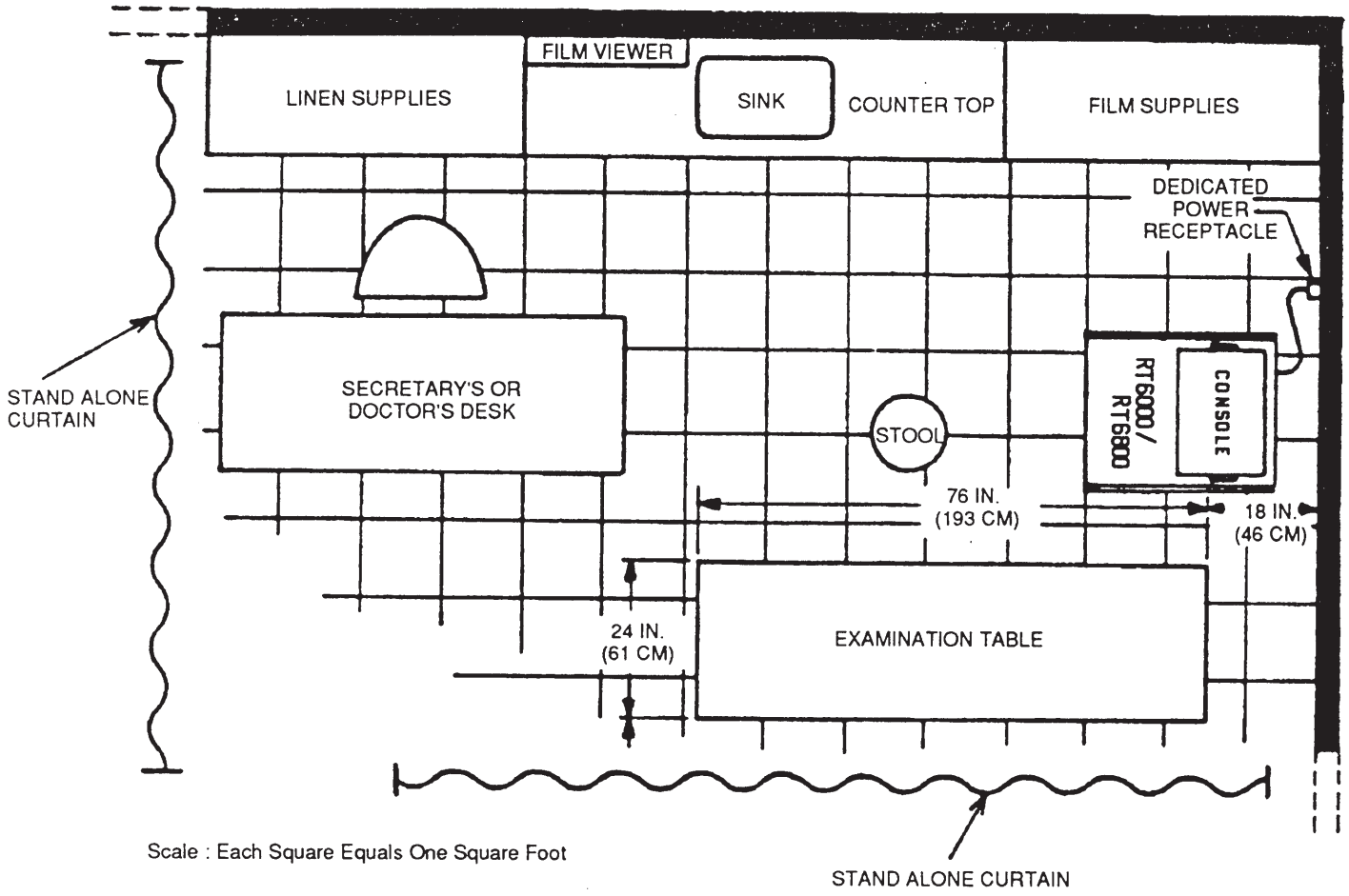

ALTERNATE, SPACE SAVING ULTRASOUND FLOOR PLAN
ILLUSTRATION 2—4

3–1 INTRODUCTION

This chapter contains many of the procedures required to install the RT 6000/RT 6800 Console. The Functional Checks chapter contains the remaining installation procedures. All these procedures are included in Table 3—1, the RT 6000/RT 6800 Installation Checklist. Use this checklist to check off each installation step. This ensures a thorough installation and functional checkout of the unit.

3–2 AVERAGE INSTALLATION TIME

The RT 6000/RT 6800 has been designed to be installed and checked out by an experienced service technician in approximately four hours. RT 6000/RT 6800 Consoles with optional equipment may take slightly longer.

3–3 WARNINGS

1. Since the RT 6000/RT 6800 weighs approximately 507 lbs (230 kg) without options, preferably two people should unpack it. Two people are also preferable for installing bulky items, such as the optional strip chart recorder.

2. The operator manual should be fully read and understood before operating the RT 6000/RT 6800 and kept nearby for quick reference.

3. Although the ultrasound energy transmitted from the RT 6000/RT 6800 transducer is within AIUM/NEMA standards, unnecessary exposure should be avoided. Only trained personnel should operate the RT 6000/RT 6800.

4. To prevent electrical shock, the RT 6000/RT 6800 should be connected to a properly grounded power receptacle. Do not use a three prong to two prong adaptor. This defeats safety grounding.

5. The RT 6000/RT 6800 has no operator serviceable components. To prevent shock, do not remove any covers or panels. Should problems or malfunctions occur, unplug the power cord. Only qualified service personnel should carry out servicing and troubleshooting.

TABLE 3–1
RT 6000/RT 6800 INSTALLATION CHECKLIST

	PROCEDURES	PARAGRAPH	INITIALS
1.	OBSERVE WARNINGS	3–3	_____
2.	INSPECT RT 6000/RT 6800 FOR SHIPPING DAMAGE	3–4	_____
3.	UNPACK RT 6000/RT 6800 COMPONENTS	3–5	_____
4.	ASSEMBLE THE RT 6000/RT 6800	3–6	_____
5.	PERFORM ELECTRICAL SAFETY TESTS	3–8	_____
6.	PERFORM THE FOLLOWING FUNCTIONAL CHECKS (SEE CHAPTER 4 FOR PROCEDURES)		

(Continued)

3–3 WARNINGS (continued)

TABLE 3–1 (Continued)
RT 6000/RT 6800 INSTALLATION CHECKLIST

	PROCEDURES	PARAGRAPH	INITIALS
HARDKEY TESTS			
6–1	POWER UP CHECK	4–2–1	_____
6–2	ACOUSTIC POWER, SECTOR ANGLE, FRAME AVERAGING, ILLUMINATION CHECKS.	4–2–2 ~ 5	_____
6–3	ECG GAIN/ SYNC 1/SYNC 2 TIME GATED UPDATE(S)/CHECKS	4–2–6 ~ 8	_____
6–4	ECG VIDEO/SCR POTS CHECKS	4–2–9	_____
6–5	PCG OFF/ON SW; PCG GAIN POT CHECKS (PCG OPTION)	4–2–10, 11	_____
6–6	AUX1 /AUX 2 CONTROLS CHECKS (AUX. OPTION)	4–2–12, 13	_____
6–7	GEN MEAS, GEN CALC CONTROLS CHECKS	4–2–14	_____
6–8	L,R, PROC CONTROLS CHECKS	4–2–15	_____
6–9	MIC CONTROL CHECK	4–2–16	_____
6–10	DISPLAY BLOCK	4–2–17	_____
6–11	IMAGE BLOCK	4–2–18	_____
6–12	TGC CONTROLS CHECK	4–2–19	_____
6–13	AUTO CONTROL CHECK	4–2–20	_____
6–14	MODE CONTROLS CHECKS	4–2–21	_____
6–15	PROGRAM CONTROL CHECK	4–2–22	_____
6–16	SWEEP SPEED, PAUSE, UPDATE, FREEZE CONTROLS CHECKS	4–2–23	_____
6–17	CIRC/AREA: DISTANCE/DEPTH CHECKS	4–2–24	_____
6–18	DOPPLER MODE CONTROLS CHECKS	4–2–25	_____
6–19	AUDIO VOLUME CONTROL CHECK	4–2–25	_____
6–20	VEL SCALE, SVL, SVS, PHASE, BASELINE CHECKS	4–2–25	_____

(Continued)

3–3 WARNINGS (continued)

TABLE 3–1 (Continued)
RT 6000/RT 6800 INSTALLATION CHECKLIST

	PROCEDURES	PARAGRAPH	INITIALS
6–21	SPEC INVT, SPEC TRACE CHECKS	4–2–25	_____
6–22	DOPPLER MODE GAIN CHECK	4–2–25	_____
6–23	TIME, VELOCITY CONTROLS CHECK	4–2–25	_____
6–24	VCR (VTR) CHECK	4–2–26	_____
6–25	SCR (LSR) CHECK	4–2–27	_____
6–26	MISC. BLUE KEY TESTS	4–2–27	_____
SOFTKEY TESTS			
7–0	DATE, TIME CHANGE TESTS	4–2–28, 29	_____
7–1	HOSPITAL NAME TEST	4–2–30	_____
7–2	POLAROID EQUIPPED UNITS ONLY: FILM DEVELOPMENT BEEP TIME TEST:	4–2–31	_____
7–3	SYSTEM, TRANSDUCER, ABBREVIATION PARAMETER DISPLAY TESTS	4–2–32 ~ 34	_____
7–4	ECHO LEVEL TESTS MEASUREMENT (CIRCUMFERENCE) TEST	4–2–35 ~ 38	_____
7–5	GRAY BACKGROUND LEVEL TEST	4–2–39	_____
7–6	2D GRAY BACKGROUND LEVEL CONTROL TEST	4–2–40	_____
7–7	M–MODE, DOPPLER GRAY BACKGROUND LEVEL CONTROL TESTS	4–2–41, 42	_____
7–8	2D, DOPPLER, M–MODE IMAGE INVERT TESTS	4–2–44 ~ 46	_____
7–9	SCR EQUIPPED UNITS ONLY: SCR PRINT (COMMENTS ON STRIP RECORDING) TEST	4–2–47	_____
7–10	SCR EQUIPPED UNITS ONLY: SCR PRINT TESTS	4–2–48, 49	_____

(Continued)

3–3 WARNINGS (continued)

TABLE 3–1 (Continued)
RT 6000/RT 6800 INSTALLATION CHECKLIST

	PROCEDURES	PARAGRAPH	INITIALS
7–11	VCR EQUIPPED UNITS ONLY: VCR SEARCH SPEED TEST	4–2–50	_____
7–12	2D IMAGE SIZE TEST	4–2–51	_____
7–13	SECTOR PRGM TEST	4–2–52	_____
7–14	ACOUSTIC POWER DISPLAY TEST	4–2–53	_____
7–15	ERROR DISPLAY TIME TEST	4–2–54	_____
7–16	DOPPLER UNITS ONLY: DOPPLER FREQUENCY MARKER TEST	4–2–55	_____
7–17	2D TRANSDUCER PARAMETER TEST	4–2–56	_____
7–18	M–MODE PARAMETER PRESET TEST	4–2–57	_____
7–19	DOPPLER UNITS ONLY: DOPPLER PARAMETER PRESET TEST	4–2–58	_____
7–20	DOTTED LINE BETWEEN MEASUREMENT CURSORS TEST	4–2–59	_____
7–21	REGISTER TESTS	4–2–60, 61	_____
7–22	35MM POLAROID/35MM EQUIPPED UNITS ONLY: REGISTER RECORD BY POLAROID/35MM TEST	4–2–62	_____
7–23	PATTERN PACKAGE TEST	4–2–63	_____
7–24	M–MODE PEAK HOLD TEST	4–2–64	_____
7–25	2D, M–MODE, SCR EDGE ENHANCEMENT TESTS	4–2–65 ~ 67	_____
7–26	2D, M–MODE ECHO LIMITER TESTS	4–2–68, 69	_____
7–27	2D, M–MODE GRAYSCALE MAPPING TESTS	4–2–70, 71	_____

3–4 EQUIPMENT INSPECTION/DAMAGE REPORTING

3–4–1 U.S. Operations

All packages and crates should be carefully examined for damage, shortages, etc. upon delivery. Table 3—2 describes reporting procedures for various types of shipping problems:

TABLE 3–2
DOMESTIC SHIPPING DAMAGE REPORTING

IF UNIT	PLEASE TAKE THE FOLLOWING ACTION:
IS VISIBLY DAMAGED	A. NOTE THAT PRODUCT WAS DAMAGED ON BOTH COPIES OF THE DELIVERY RECEIPT.
	B. HAVE DRIVER SIGN DAMAGE NOTATION, USING HIS FULL SIGNATURE. REQUEST INSPECTION BY CARRIER, WHICH MAY BE WAIVED
	C. AFTER RECEIVING RETURN GOODS AUTHORIZATION, RETURN ALL DAMAGED MERCHANDISE, FREIGHT CHARGES COLLECT, TO G.E. MEDICAL SYSTEMS, DIGITAL BOARD REPAIR, 430 W. GRANGEAVE., MILWAUKEE, WI 53201 VIAORIGINAL CARRIER. INCLUDE RETURNED GOODS AUTHORIZATION NUMBER.
HAS CONCEALED DAMAGE	A. NOTIFY CARRIER IMMEDIATELY. REQUEST INSPECTION WITHIN 15 DAY LIMIT IMPOSED BY CARRIER REGULATIONS.
	B. RETAIN ALL PACKING MATERIAL UNTIL AFTER INSPECTION AND YOU HAVE THE INSPECTION REPORT. THIS IS REQUIRED BY TARIFF REGULATIONS TO VALIDATE A CLAIM.
	C. NOTIFY THE G.E. DISTRICT SALES OFFICE INITIATING SHIPMENT. THEY WILL OBTAIN A RETURN GOODS AUTHORIZATION.
	D. RETURN ALL DAMAGED MERCHANDISE, FREIGHT CHARGES COLLECT, TO G.E. MEDICAL SYSTEMS, DIGITAL BOARD REPAIR, 430 GRANGE AVE., MILWAUKEE, WI 53201.
FAILS TO ARRIVE, WRONG PRODUCT, OR QUANTITY IS WRONG	CALL G.E. DISTRICT SALES OFFICE INITIATING ORDER. FOLLOW THEIR INSTRUCTIONS.
HAS UNITED PARCEL SERVICE (UPS) VISIBLE DAMAGE	DO NOT ACCEPT THE SHIPMENT. HAVE UPS RETURN IT TO SENDER.
HAS UPS CONCEALED DAMAGE OR LOSS	CONTACT G.E. DISTRICT SALES OFFICE ORIGINATING SHIPMENT; FOLLOW THEIR INSTRUCTIONS. THEY WILL OBTAIN A RETURNED GOODS AUTHORIZATION AND ARRANGE TO HAVE UPS RETURN THE MERCHANDISE UNDER A G.E. SHIPPING NUMBER. (THIS NUMBER APPEARS ON THE METER STRIP ATTACHED TO THE CRATE OR PACKAGE).

3–4–2 International Operations

Upon receipt of a shipment, inspect each package WITHOUT unpacking it. Note any damage or loss directly on the shipment Bill of Lading or on the carrier's delivery receipt. IMMEDIATELY write a letter to the carrier to demonstrate your intent to file a claim of loss or damage. Then contact your insurance agency. If the shipment is insured by a General Electric Company policy, submit your claim to:

March and McLennon, Inc.
Air (or Marine, if applicable) Cargo Department
1221 Avenue of the Americas
New York, New York 10020
U.S.A.

3–4–3 Claim Procedure

The consignee/customer bears the responsibility for filing a timely claim for damages. Typically, a claim must be filed with the insurance company and carrier within seven days of delivery. Questions regarding the application of this procedure to your particular shipment may be referred to the Manager, Export Control, Milwaukee, Wisconsin, Phone (414) 544—3574.

3–5 UNPACKING RT 6000/RT 6800 COMPONENTS

Note:
Check the shipping container for special instructions. Verify that the container is intact. In some cases a secondary container may be used. If so, ask the carrier for unpacking instructions.

3–5–1 Normal Unpacking Procedure

1. Leaving bottoms of containers intact, cut the band straps.
2. Pull box up and off of the RT 6000/RT 6800 Console.
3. Remove protective packing material; save for future shipments, if required.
4. Pull out ramp and place next to box. Preferably with a helper, carefully roll the RT 6000/RT 6800 off its shipping platform.

CAUTION

Be prepared for a surge as the RT 6000/RT 6800 rumbles off its shipping platform.

3–6 ASSEMBLING THE RT 6000/RT 6800

1. Remove the monitor from its shipping container.
2. Loosen the monitor mounting pin attached to the base slider on the console, and remove the base slider cover by removing its rear screw.
3. Place the monitor on the base slider, and connect the monitor molex plug to matching molex receptacle. Then push the plug into the monitor cover.
4. Install the base slider cover by using the rear screw removed on Step 2. Tighten the monitor mounting pin securely.
5. Locate, remove, and unpack the transducers located in the separate container.
6. Gain access to the transducer receptacles located at the rear of the shelf just under the keyboard as follows:
   a. Press the large white release button on the lefthand side (as seen from front) of the RT 6000/RT 6800.
   b. Then, carefully pull the entire keyboard towards the front as far as it will go.
   c. Slide keyboard to the left until the two transducer receptacles are accessible.
7. Connect the B—Mode transducer to the lefthand transducer receptacle as follows:
   a. Ensure transducer twist lock lever points towards the 2 o'clock position.
   b. Install transducer connector on the receptacle guide pin until it touches the receptacle mating surface.
   c. Twist the transducer twist lock lever to the 6 o'clock position to lock it in place. Twist the lever to the 2 o'clock position to disconnect the transducer.

Note:

It is not necessary to turn off RT 6000/RT 6800 power to connect or disconnect a transducer.

8. Connect the RT6000/RT6800 power cable to a hospital grade power receptacle of the proper voltage. Never use a three–to–two prong adapter; this defeats the safety ground.

3–7 MOVING THE RT 6000/RT 6800

3–7–1 Moving the RT 6000/RT 6800 to Another Room

In general, a single adult can move the RT 6000/RT 6800 along an even surface with no steep grades. At least two people should move the machine when large humps, grooves, or grades will be encountered. (It is better to pull from the rear rather than push from the front of the unit). Before moving, store all loose parts in the unit. Wrap transducers in soft cloth or foam to prevent damage.

3–7–2 Transporting the RT 6000/RT 6800

All shipping should be done by General Electric representatives, or their assignees. Follow the instructions in paragraph 3–7–1, with the following additional precautions:

1. The original packaging should be used when reshipping the unit. General Electric representatives or assignees shall repackage the console before shipment.

2. Carefully load the RT 6000/RT 6800 aboard the van. Use four straps to secure the unit and prevent lateral movement. Set the unit over the van's center of gravity. **Do not lay the unit down for shipment!**

3. Prevent shock by driving at 45—55 mph on paved roads. Avoid unpaved roads and drive carefully at road and railroad crossings.

4. Repeat the installation procedure, completing the installation checklist, at the new site.

3–8 ELECTRICAL SAFETY TESTS

The following tests are performed at the factory and should be performed on site at the hospital. These tests are: facility power wiring test, system leakage current test, and the ground continuity test. All measurements are made with a Microguard Model MG—5 Microammeter built by Bio—Design, Inc.

3–8–1 Leakage Current

Leakage current is the current which could flow through a patient or operator if there is a system fault. Transducers and exposed console surfaces are tested.

3–8–2 Ground Continuity

Ground continuity should be checked between the AC power supply and different points on the RT 6000/RT 6800 Console. A continuous ground ensures electrical safety if there are wiring faults.

3–8–3 Facility Power Wiring Test

1. Check the batteries in the Microguard tester by moving its selector switch to "Batt—", then to "Batt+". The meter needle should move over the box labeled "Batt" for both switch positions if the batteries are good.

2. Set the tester power switch to the OFF position; move the selector switch to "Outlet Test".

3. Connect the Microguard power cord into the three wire, hospital grade AC power receptacle to be used by the RT 6000/RT 6800. The meter indicates wiring conditions in the five colored arcs at the bottom of the scale. Correct any indicated wiring problems before installing the RT 6000/RT 6800.

3–8–4 Transducer Source Leakage Current

1. Turn off the Microguard tester and the RT 6000/RT 6800.
2. Plug the RT 6000/RT 6800 power plug into the Microguard tester; connect the tester to the AC power receptacle tested in secton 3—8—3(3).
3. Set the tester's Selector switch to 200. This position provides a full scale meter reading of 200 microamps.
4. Set the tester's "Patient Lead Selector" switch to the "All Other Tests" position.
5. Set the tester's "Input" switch to the "Red Probe Only" position.
6. Apply GEL to transducer lens.
7. Wrap the transducertightly in aluminum foil. Ensure foil makes good contact with the transducer's acoustic aperture.
8. Turn on RT 6000/RT 6800 power.
9. Suspend the transducer by the cable or place it on an insulating surface.
10. After waiting for scanning to begin, press the red probe of the Microguard tester against the aluminum foil on the transducer; record the ammeter reading.
11. Record ammeter reading made under the test conditions specified in Table 3—3. This test passes when all readings measure less than 10 microamps.

CAUTION

Do not touch the console when the Microguard Tester "Ground Switch" is open.

TABLE 3–3
TRANSDUCER SOURCE LEAKAGE CURRENT TEST

RT 6000/RT 6800 CONSOLE POWER	MICROGUARD TESTER POWER SWITCH POS.	TESTER GROUND SWITCH POS.	READING
ON	NORM	OPEN	_____
ON	NORM	CLOSED	_____
ON	REV	OPEN	_____
ON	REV	CLOSED	_____
OFF	NORM	OPEN	_____
OFF	NORM	CLOSED	_____
OFF	REV	OPEN	_____
OFF	REV	CLOSED	_____

3–8–4 Transducer Source Leakage Current (continued)

11. Repeat this test for all transducers that will be used. These readings must be maintained as part of the installation record.

3–8–5 Chassis Source Leakage Current Test

1. Leave the Microguard tester and console connected as described above. Locate the following test points:

   a. Monitor Housing Screw

   b. Rear Panel Connector

   c. Any Castor

2. Make current readings at these test points using the red probe of the Microguard tester. Record readings for the test conditions specified in Table 3—4. This test passes when all readings measure less than 100 microamps. Retain these readings as part of the installation record.

TABLE 3–4
CHASSIS SOURCE LEAKAGE CURRENT TEST

RT 6000/RT 6800 CONSOLE	SWITCH POS.	TESTER POWER SWITCH POS.	TESTER GROUND READING TP1 TP2 TP3
ON	NORM	OPEN	————
ON	NORM	CLOSED	————
ON	REV	OPEN	————
ON	REV	CLOSED	————
OFF	NORM	OPEN	————
OFF	NORM	CLOSED	————
OFF	REV	OPEN	————
OFF	REV	CLOSED	————

3. Disconnect the Microguard Tester from the AC outlet. Disconnect the RT 6000/RT 6800 power plug from the Microguard Tester.

3–8–6 Ground Continuity Test

1. Set Microguard Tester Input switch to “Red and Black Probes” position.
2. Set tester’s Patient Lead switch to “All Other Tests” position.
3. Plug the black tester probe into the jacket next to the red probe lead.
4. Short the red and black probes together to calibrate zero ohms. (Use “Zero Ohms” adjustment beneath the selector switch).
5. Measure the resistance from the ground (round) prong of the power plug to the following test points; record below. This test passes when all readings measure less than 100 milliohms. This completes the electrical safety tests.

		READING
1.	TEST POINT 1 : MONITOR HOUSING	_____
2.	TEST POINT 2 : REAR PANEL CONNECTOR	_____
3.	TEST POINT 3 : ANY CASTOR WHEEL SUPPORT	_____

4–1 INTRODUCTION

This chapter provides procedures for quickly checking major functions of the RT 6000/RT 6800 Console. It is one of the three service chapters in this manual. The other service chapters are: Chapter 6, Service Adjustments, and Chapter 8, Diagnostics.

Note:
These procedures form part of the Installation Checklist found at the beginning of Chapter 3 and should be performed during installation.

However, you should also use these proceduresas basic checks when service is required. In this case, use this chapter's Table of Contents to locate and exercise the function related to the service complaint. Should the functional test fail, refer to Chapter 8, Diagnostics.

4–1–1 Required Equipment

To perform these tests, you'll need the following items:

a. Any sector transducer and a CW Transducer for optional Doppler equipped consoles.

b. Phantom (We recommend the Model 413 Phantom manufactured by RMI, which was used in this procedure. However, any echo block or phantom with defined reference points will be adequate).

c. Water bottle. (Water is used as the coupling medium on the phantom surface).

Note:
Turn off all optional equipment such as a strip chart recorder or video tape recorder before proceeding.

4–2 FUNCTIONAL CHECK PROCEDURES

4–2–1 Power Up Check

OperatorAction	Verifiable RT 6000/RT 6800 Action
a. Connect the transducer to lefthand probe connector beneath keyboard. (To reach connector, press white button on lefthand side of console; slide keyboard toward front of unit. Then rotate keyboard to left).	
b. Lift up RT 6000/RT 6800 top panel cover located above the Function, Doppler, Display, and Image controls.	
c. Turn on Power toggle switch (located on left side of console).	One or more beeps occur. B—mode display shown in Illustration 4—2 appears.Display parameters in upper righthandcorner of CRT reads: DF:16 G:50 DR:54 REJ: AVG:.

4–2–2 Acoustic Power (%) Potentiometer

Operator Action	Verifiable RT 6000/RT 6800 Action
a. Type <CONTROL> OA 1 to check acoustic power function. (if already on, press <CONTROL> ; if off, press <ENTER>).	
b. In top panel, rotate Acoustic Power (%) Pot from (off) position to 6,25,56 and 100% positions.	As pot is rotated, AP:00, AP:6, AP:25, AP:56, then AP:100 appear on monitor.

4–2–3 Sector Angle Switch

Operator Action	Verifiable RT 6000/RT 6800 Action
a. Switch Sector Angle switch between 60 % and 90 % positions.	Sector Image narrows when sector switch is in 60% position; widens when switch is in 90 % position.

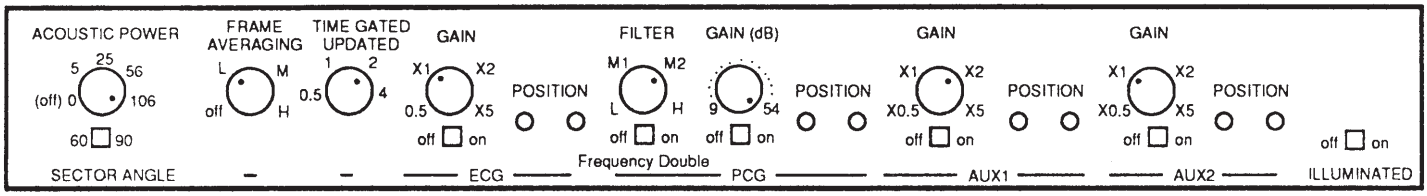

SUB PANEL
ILLUSTRATION 4–1

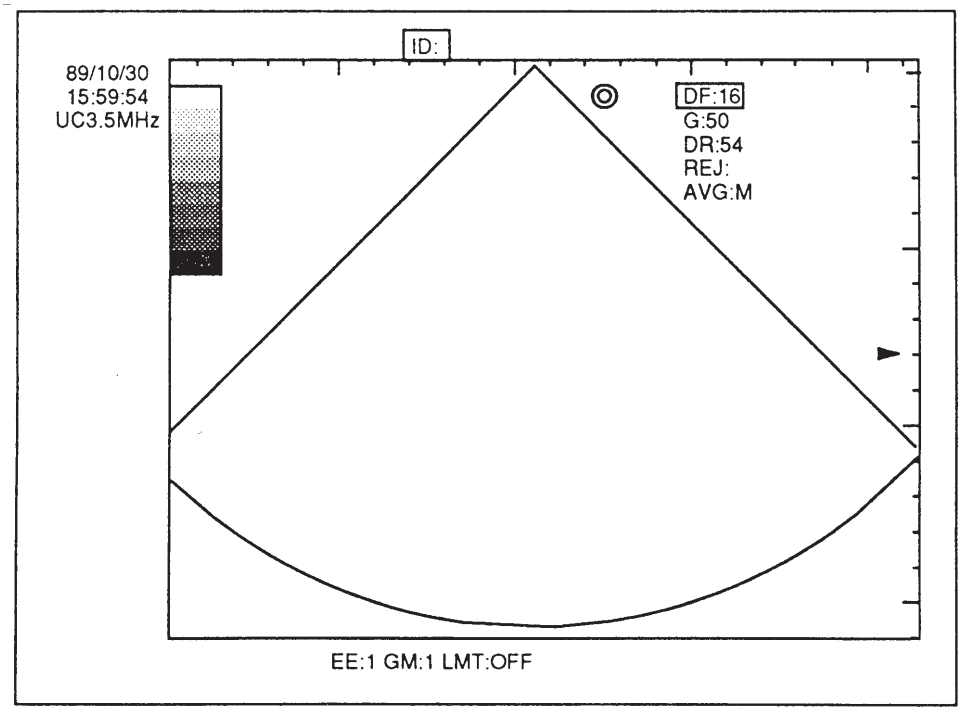

SECTOR PATTERN
ILLUSTRATION 4–2

4–2–4 Frame Averaging

Operator Action	Verifiable RT 6000/RT 6800 Action
a. Scan phantom with transducer. Select B—mode operation.	
b. Set gain to 80 dB; dynamic range to 54dB.	
c. Switch Frame Averaging pot from Off to H (High) positions.	Image becomes smoother as frame averaging increases.
d. Press Auto key to return to Gain and dynamic range default settings.	

4–2–5 Illumination Control

Operator Action	Verifiable RT 6000/RT 6800 Action
a. On top control panel, turn Illumination switch off and on.	Front panel and TGC control lamps in slider pots turn off and on.

4–2–6 ECG Off/On Control (Units W/ECG Option Only)

Operator Action	Verifiable RT 6000/RT 6800 Action
a. Press B/M key to select M—mode. Then press Prgm key to display full size M—mode display.	
b. Remove the rear panel and fan assy to access connector CN136 on the rear edge of the PSSA2 Assy.	
c. Connect the special test cable (YMS P/N P9500RS) to the ECG, PCG, AUX1 and AUX2 jacks below the keyboard.	
d. Connect other end of test cable to CN1 36, PSSA2 Assy.	
e. Type <CONTROL> S <SHIFT> ! <ENTER> to enter service mode.	
f. Type <CONTROL> SGB <ENTER>.	
g. Turn ECG switch ON.	Verify simulated QRST Trace is similar to that shown in Illustration 4—3.

4–2–7 ECG Units: ECG Gain

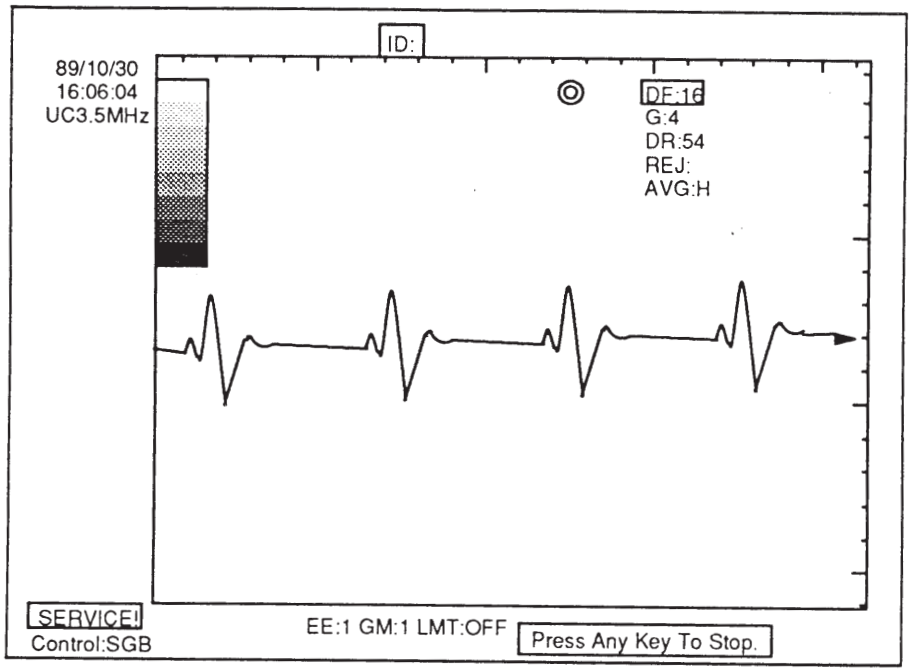

ECG PATTERN–1
ILLUSTRATION 4–3

Operator Action	Verifiable RT 6000/RT 6800 Action
a. Vary ECG Gain from x0.5 to x5, using ECG Gain pot.	Verify QRST trace amplitude increases as shown by comparing Illustration 4—3 and 4—4.
b. Decrease ECG Gain to x2.	
c. Turn RT 6000/RT 6800 off and on.	

4–2–8 ECG Units: Sync 1/Sync 2 Controls

Operator Action	Verifiable RT 6000/RT 6800 Action
a. Press Sync 1 key on keyboard.	Sync 1 :xx appears.
b. Rotate trackball to **left** until Sync 1:0 appears on display. This aligns ECG marker with the R portion of cardiac waveform.	
c. Rotate trackball to **right** until R peak is reached.	Verify Sync 1 reads Sync 1:1000, indicating 1 second has elapsed between R peaks. (See Illustration 4–5).
d. Rotate trackball to **right** until Sync 1:1999 appears on display. Now, marker is located 1999 msec after the R portion of cardiac waveform.	
e. Rotate trackball to left until Sync 1:0 appears.	
f. Press Sync 2 on keyboard. Rotate trackball to **right.**	

4–2–8 ECG Units: Sync 1/Sync 2 Controls (continued)

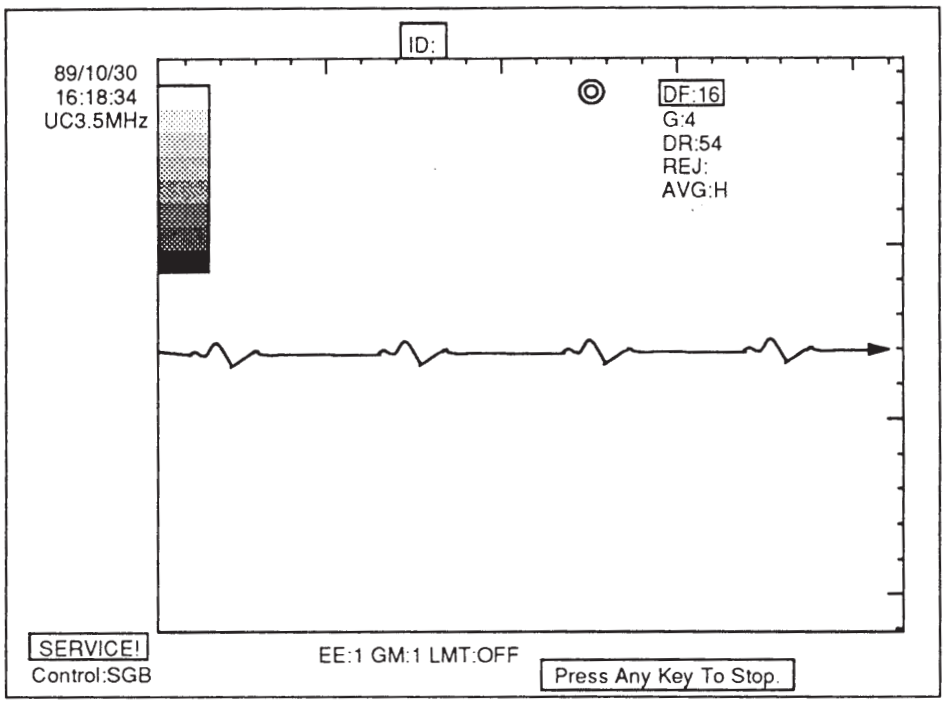

ECG PATTERN–2
ILLUSTRATION 4–4

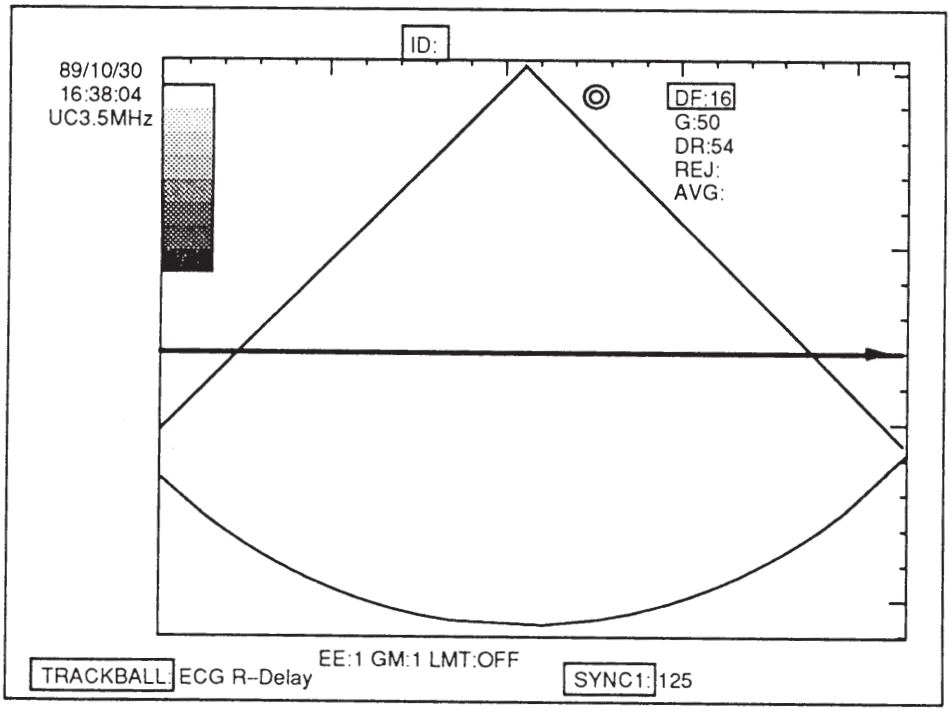

SYNC 1
ILLUSTRATION 4–5

4–2–8 ECG Units: Sync 1/Sync 2 Controls (continued)

Operator Action	Verifiable RT 6000/RT 6800 Action
	1. Verify dotted marker appears as shown in Illustration 4—6.
	2. Verify Sync 2:xx (time in msec) appears after Sync 1:0.

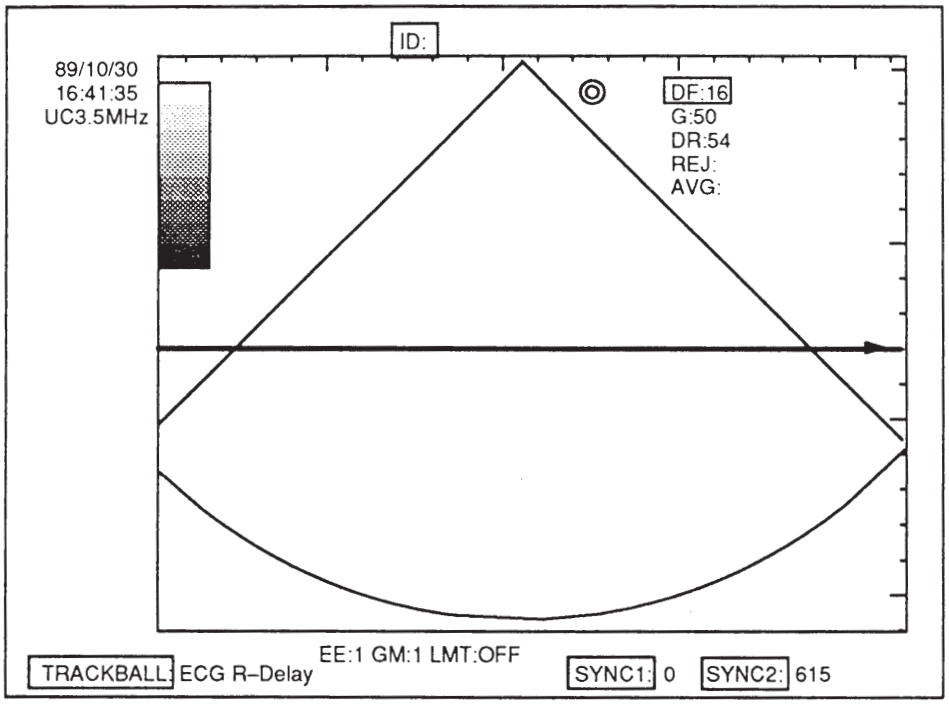

SYNC 1 AND SYNC 2
ILLUSTRATION 4–6

4–2–9 ECG Units: ECG Video/SCR Position Potentiometers

Operator Action	Verifiable RT 6000/RT 6800 Action
a. While watching monitor, rotate ECG Position pot in both directions.	ECG trace moves up and down on screen.
SCR (LSR) Equipped Units Only:	
b. On SCR, set SPEED pot to EXT position.	
c. Press Strip key on keyboard. Rotate SCR's ECG Position pot while monitoring the SCR strip chart.	Verify ECG trace moves from side to side on strip chart.

4–2–9 ECG Units: ECG Video/SCR Position Potentiometers (continued)

Operator Action	Verifiable RT 6000/RT 6800 Action
d. Press Strip key again to stop strip charting.	
e. Press <CONTROL> key twice to exit program.	

4–2–10 PCG Units: PCG Off/On Switch: PCG Gain Pot

Operator Action	Verifiable RT 6000/RT 6800 Action
a. Press B/M key to select M—mode.	
b. Press Prgm key.	Full size M—mode display appears.
c. If not done, remove the rear panel and fan assy to access connector CN136 on the rear edge of the PSSA2 Assy in card cage.	
d. If not done, connect the special test cable (YMS P/N P9500R5) to the ECG, PCG, AUX1 and AUX2 jacks below the keyboard.	
e. If not done, connect other end of test cable to CN136, PSSA2 Assy.	
f. If necessary, type <CONTROL> S <SHIFT> <ENTER> to enter service mode.	
g. Type <CONTROL> SGC <ENTER>.	
h. Turn PCG switch ON.	Verify PCG simulated signal is similar to that shown in Illustration 4—7. Note that adjacent waveforms have opposite phases.
i. Using stop watch, verify each similar phase waveform occurs once per second. Approximately 0.4 seconds should elapse between peaks of opposing phase waveforms.	

4–2–10 PCG Units: PCG Off/On Switch: PCG Gain Pot (continued)

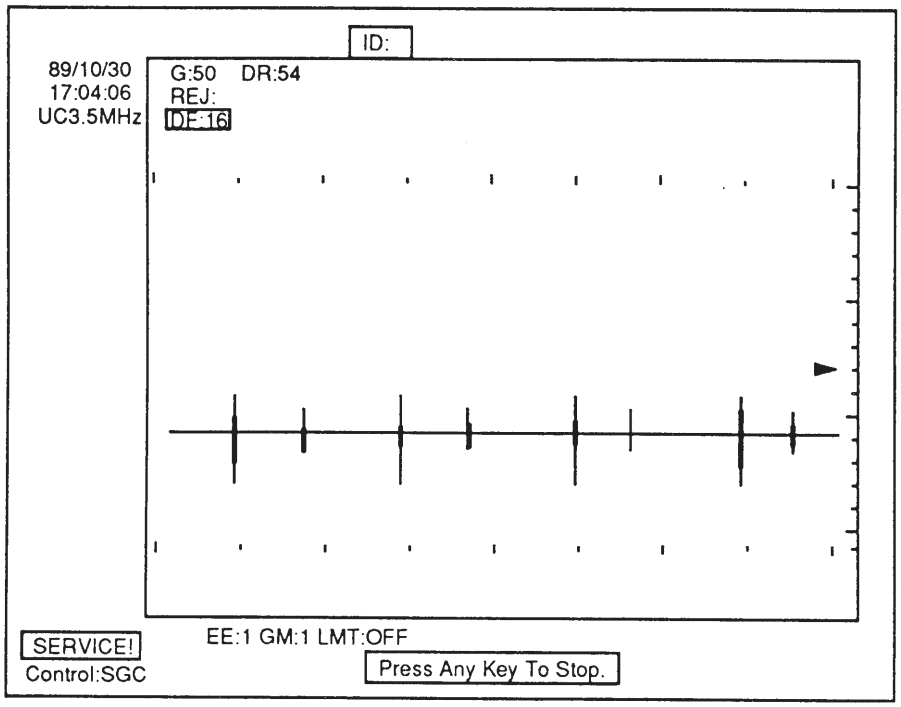

PCG TEST SIGNAL
ILLUSTRATION 4–7

4–2–11 PCG Units: PCG Gain/Filter checks

Operator Action	Verifiable RT 6000/RT 6800 Action
a. Rotate PCG Gain pot to ensure gain circuit works.	
b. Rotate FILTER pot from L to H.	Waveform compresses as low frequency cutoff is increased.
c. Plug in headphones below keyboard. Switch Frequency Double switch ON.	Verify PCG frequency increases.
d. Rotate PCG Position pot.	Verify PCG trace moves up and down on the monitor.
SCR (LSR) Equipped Units Only:	
e. Press Strip key on keyboard. Rotate SCR's PCG Position pot while monitoring the SCR strip chart.	Verify PCG trace moves from side to side on strip chart.
f. Press Strip key again to stop strip charting.	
g. Press <CONTROL> key twice to exit program.	

4–2–12 Auxiliary Option Units Only: AUX1 Controls

Operator Action	Verifiable RT 6000/RT 6800 Action
a. Press B/M key to select M mode. Then press Prgm key to display full size M mode display.	
b. Set depth for 12cm.	
c. If not done, remove the rear panel and fan assy to access connector CN 136 on the rear edge of the PSSA2 Assy.	
d. If not done, connect the special test cable (YMS P/N P9500RS) to the ECG, PCG, AUX1 and AUX2 jacks below the keyboard.	
e. If not done, connect other end of test cable to CN136, PSSA2 Assy.	
f. If not done, type <CONTROL>S<SHIFT>!<ENTER> to enter service mode.	
g. Type SGD <ENTER> for AUX1 display; SGE <ENTER> for AUX2 display.	
h. Switch AUX1 switch ON.	Verify sinewave appears as shown in Illustration 4—8.
i. Rotate Monitor's AUX1 Position pot.	Verify AUX1 trace moves up and down on monitor.
j. Press Strip key on keyboard. Rotate SCR's AUX1 Position pot while monitoring the SCR strip chart.	Verify AUX1 or AUX 2 trace moves from side to side on strip chart.
k. Press Strip key again to stop strip charting.	
l. Press <CONTROL> twice to Exit.	

4–2–13 Auxiliary Option Units Only: AUX2 Controls

Operator Action	Verifiable RT 6000/RT 6800 Action

Repeat paragraph 4—2—12, steps a through k.

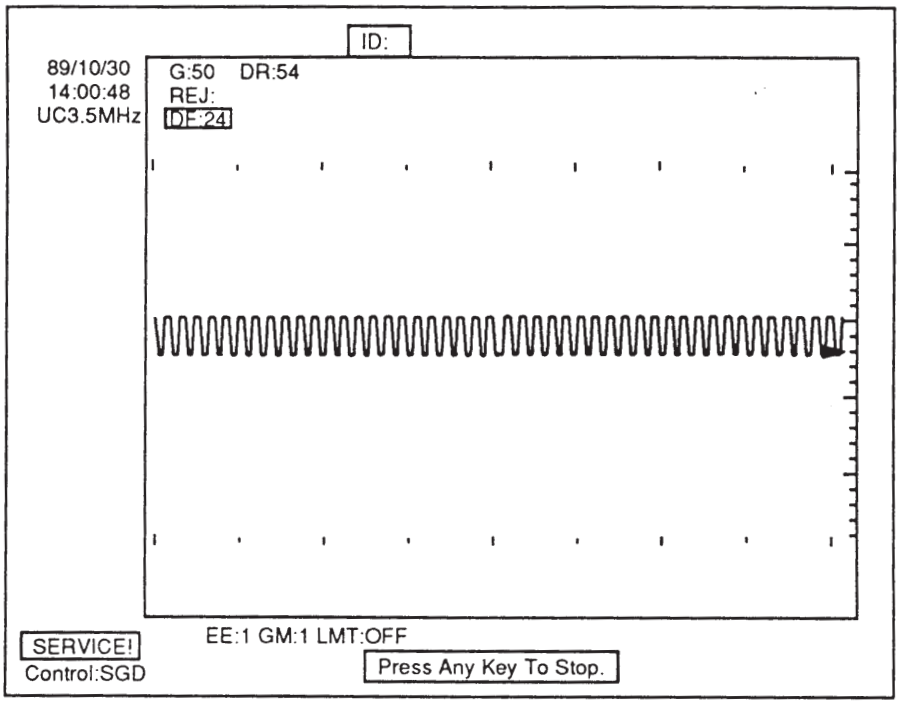

AUX1/AUX 2 TEST PATTERN
ILLUSTRATION 4–8

4–2–14 Gen Meas and Gen Caic Controls

Operator Action	Verifiable RT 6000/RT 6800 Action
a. Press Gen Meas key in Function block.	Gen Meas key LED lights; General Measurements display appears: GENERIC MEAS: SET PATIENT IDENTIFICATION ID AGE : yrs HEIGHT : cm WEIGHT : kg SEX
b. Press ENTER KEY	ENTER is highlighted.
c. Rotate trackball left to right.	Highlight moves in submenu at bottom of General Measurements display.
d. Press blue New Patient key, left side, lower panel.	General Measurements display disappears.

4−2−15 L, R, Proc Controls

Operator Action	Verifiable RT 6000/RT 6800 Action
a. Press dual channel B—mode key.	Dual —mode sector displays appear.
b. Press L key in Patterns block, middle panel.	L key LED lights; in default mode, a cardiac pattern menu is displayed on left side of screen. **Cardiac Menu:** Ptrn:PLAX PSX−MV PSX−PP PSX−AV AP−4CH AP−2CH SSN SC—4CH
c. Rotate trackball left to right.	Patterns occur one at a time as each pattern is highlighted. (See Illustration 4−9a/b for cardiac patterns).
d. Press New Patient key.	Last pattern and the submenu are erased.
e. Press dual channel B—mode key two times.	
f. Press R key in Patterns block, middle panel.	R key LED lights; cardiac patterns display appears.
g. Rotate trackball left to right.	Seven displays occur one at a time under righthand sector as each pattern is highlighted. (See Illustration 4−10 for typical display)
h. Press New Patient key.	Cardiac display disappears; single B—mode image returns.
i. Press Proc key in Patterns block, middle panel.	Proc key LED lights; A—F submenu appears at bottom of screen. (See Illustration 4−11).
j. Rotate trackball left to right.	Image darkens as highlighter moves from A to D in submenu; image brightens as highlighter moves from D—F.
k. Press New Patient key.	Default B—mode image reappears.

4–2–15 L, R, Proc Controls (continued)

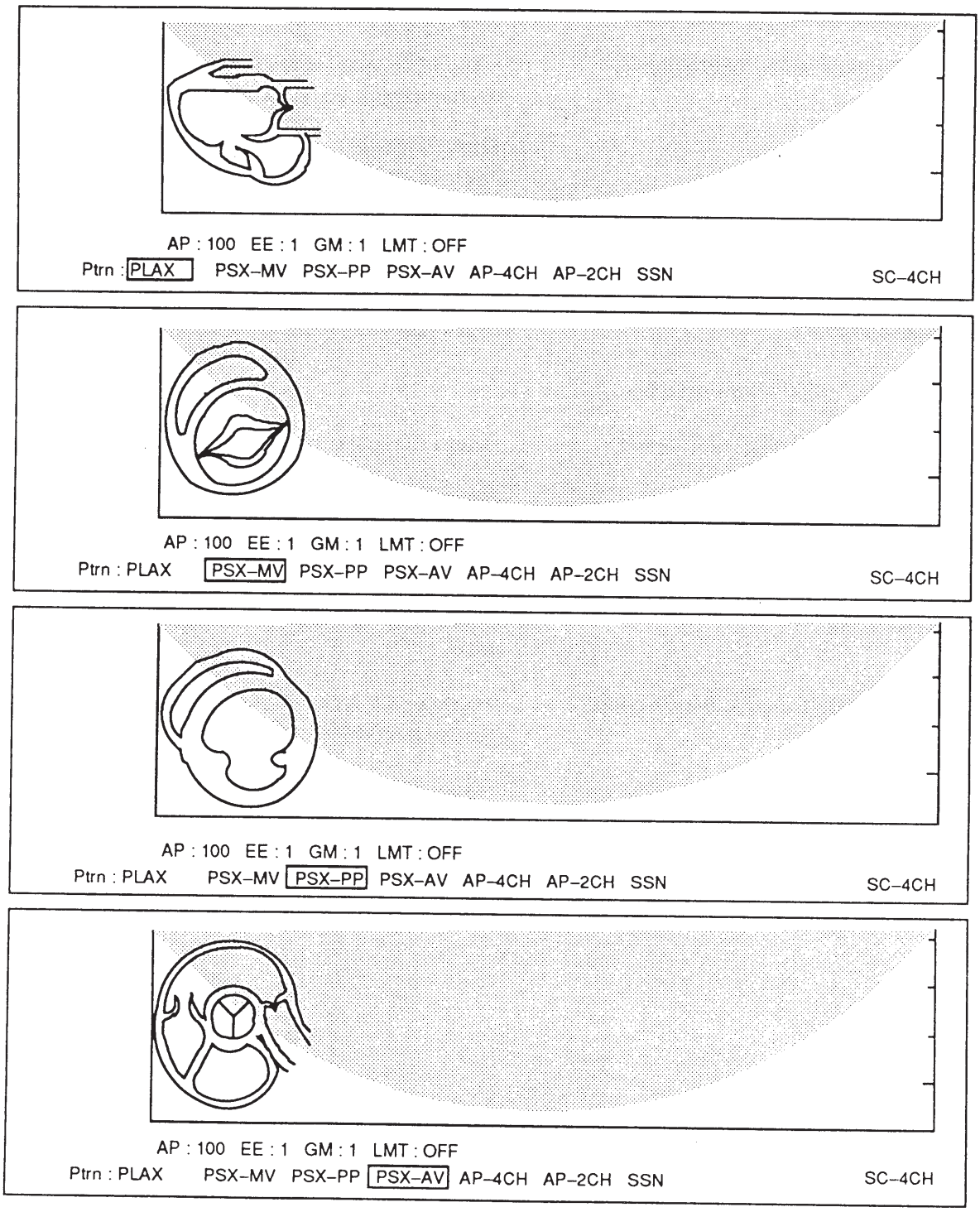

CARDIAC PATTERNS–1
ILLUSTRATION 4–9a

4–2–15 L, R, Proc Controls (continued)

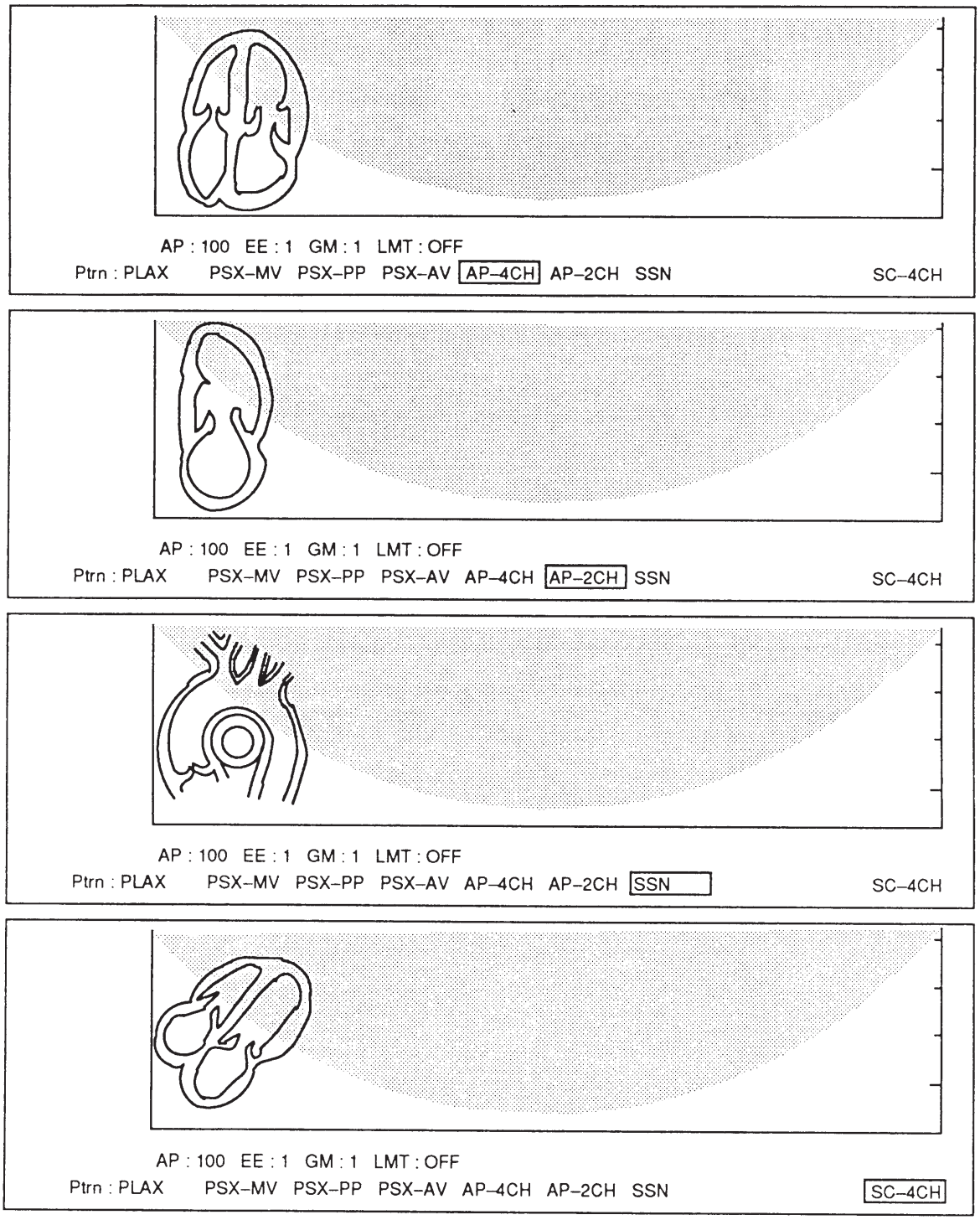

CARDIAC PATTERNS–2
ILLUSTRATION 4–9b

4–2–15 L, R, Proc Controls (continued)

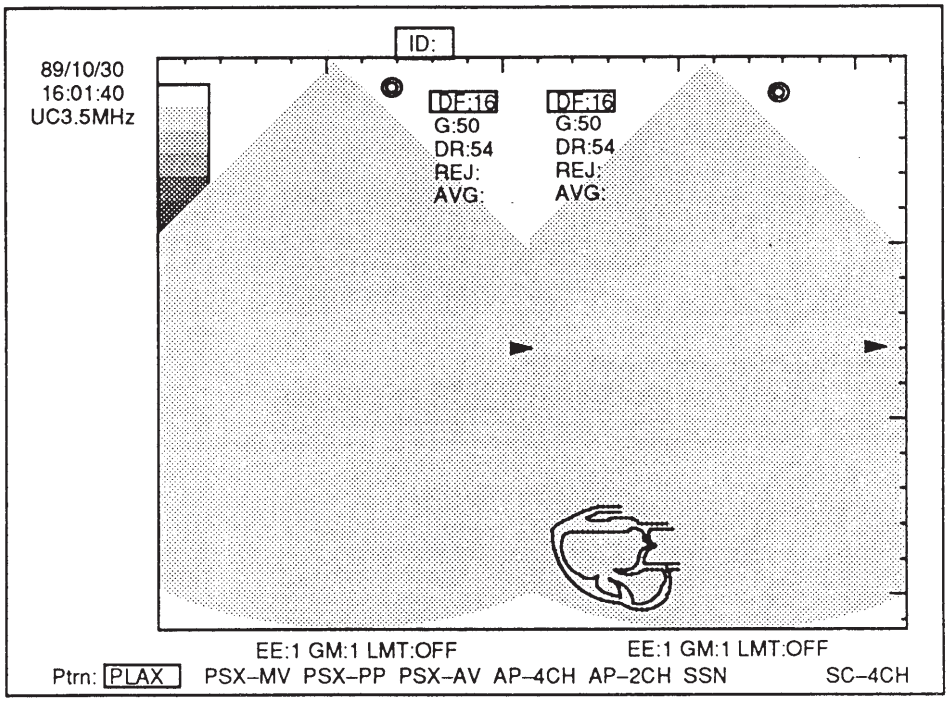

CARDIAC PATTERN–3
ILLUSTRATION 4–10

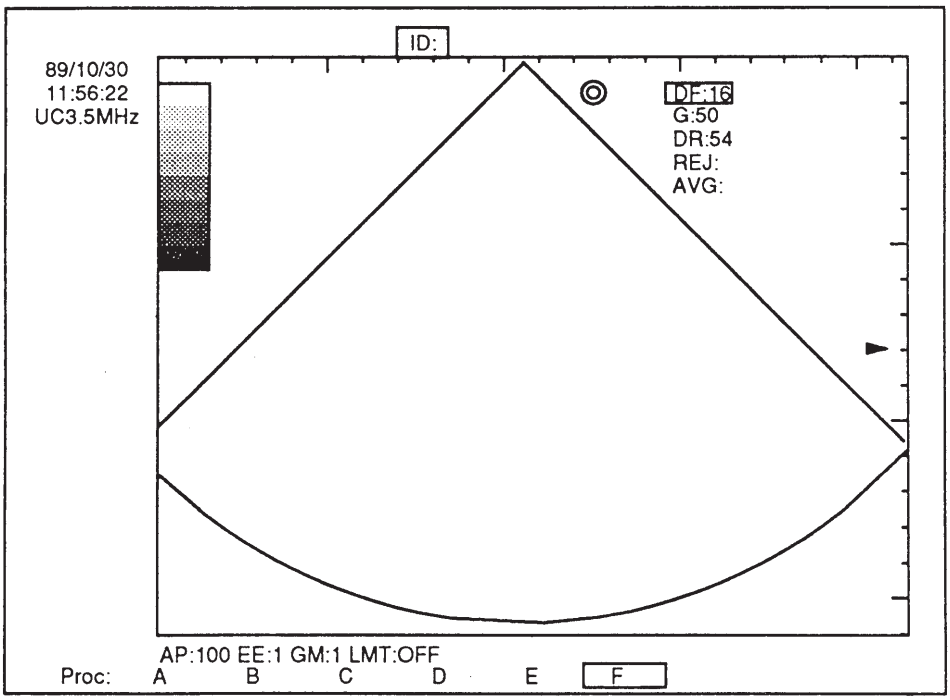

PROC CONTROL
ILLUSTRATION 4–11

4–2–16 Mic Control (Perform if headphones available)

Operator Action	Verifiable RT 6000/RT 6800 Action
a. Plug headphones into Headphone jack in recess behind keyboard. Put them on.	
b. Press On/Off key, middle panel, so its LED lights	.Speak into Mic hole. You should hear your voice through headphones.
c. Press On/Off key again to turn off microphone.	

4–2–17 Display Block

Focus, Depth, Invt, and Rvs Controls

Operator Action	Verifiable RT 6000/RT 6800 Action
a. Turn power off, then on; set image gain for GAIN: 90 display.	B—mode image appears.
b. Press transducer on Phantom. Repeatedly press Focus key	Focus Mark on righthand side of CRT moves up to 1 cm mark. Focus area at 1 cm is brighter.
c. Press transducer on Phantom.	
d. Repeatedly press Focus key.	Focus Mark moves down to 8 cm mark. Focus area at 8cm is brighter.
e. Press Auto pushbutton.	
f. Press Invt key in Display block once.	Invt key LED lights; B—mode image turns upside down.
g. Press Invt key again.	Invt key LED turns off; B—mode image returns to upright position.
h. While scanning phantom, press Rvs key in Display block.	Rvs key LED lights; image reverses.
i. Press Rvs key again.	Rvs key LED turns off; image returns to normal.

4–2–18 Image Block

Gain, Dynamic Range, and Rejection

Operator Action	Verifiable RT 6000/RT 6800 Action
a. Press the B/M—mode key in the Mode block, lower panel.	B/M—mode display appears.
b. b. Press the B—mode key in the Image block, middle panel.	B—mode key LED lights. Sector scan appears.

4–2–18 Image Block (continued)

Gain, Dynamic Range, and Rejection

	Operator Action	Verifiable RT 6000/RT 6800 Action
c.	Turn Gain potentiometer clockwise.	B—mode image brightens; G: gain indicator increases to 100 maximum.(100dB). Beeper sounds when G:100 exceeded.
d.	Turn Gain potentiometer counter clockwise.	B—mode image darkens to black; G: gain indicator decreases to 0 minimum. Beeper sounds when G:0 exceeded.
e.	Press the B/M—mode key in the image block.	M key LED lights.
f.	Turn Gain potentiometer clockwise.	M—mode image brightens; G: gain indicator increases to 100 maximum.(100dB). Beeper sounds when G:100 exceeded.
g.	Turn Gain potentiometer counter clockwise.	M—mode image darkens to black; G: gain indicator decreases to 0 minimum. Beeper sounds if G:0 exceeded in negative direction.
h.	Press Auto pushbutton.	B—mode image, default settings are restored.
i.	Press the Dynamic Range ▲ key continuously.	Whole image becomes softer and brighter. DR: dynamic range indicator increases to DR:72 (72 dB) maximum.
j.	Press the Dynamic Range key continuously.	Whole image becomes sharper and darker. DR: dynamic range indicator decreases to DR :30, (30 dB) minimum.
k.	Press the Auto pushbutton.	B—mode image, default settings are restored.
l.	Press the Rejection ▲ key in Image block, middle panel.	Image rejection increases (screen darkens). REJ: rejection indicator increases to REJ: H (High) maximum.
m.	Press the Rejection ▼ key.	Image rejection decreases (screen brightens). REJ:rejection indicator decreases to REJ: L (Low) minimum.

4–2–19 Time Gain Compensation (TGC) Controls

	Operator Action	Verifiable RT 6000/RT 6800 Action
a.	Press the B—mode key.	
b.	Slide any TGC control to the right.	Image in corresponding focal zone band on display brightens.

4–2–19 Time Gain Compensation (TGC) Controls (continued)

Operator Action	Verifiable RT 6000/RT 6800 Action
c. Slide same TGC control to the left.	Image in corresponding focal zone band on display darkens.
d. Repeat steps b and c, sliding each TGC control right and left.	Corresponding focal zone band should brighten and darken.
e. Press Depth ▲ and ▼ keys to change focus depth from 4 cm minimum to 24 cm maximum. At each depth setting, move TGC controls to ensure they brighten or darken the selected depth area.	

4–2–20 Auto Control

Operator Action	Verifiable RT 6000/RT 6800 Action
a. Switch POWER off, then on.	Auto LED illuminates; default image control settings are: G50, DR54, REJ:xx, AVG:xx, DF:16.
b. Press either Dynamic Range key once.	Auto LED turns off; unit is in manual mode.

4–2–21 Mode Controls

Operator Action	Verifiable RT 6000/RT 6800 Action
a. Press B—mode key.	B—mode key LED illuminates; B—mode sector scan is displayed.
b. Press Dual B—mode key.	Half sized B—mode image is displayed on left side of CRT; Lefthand Dual B—mode key LED lights.
c. Press the Dual B—mode key again. Scan phantom with probe.	Real time righthand B—mode image appears; lefthand image freezes. Righthand Dual B—mode key LED lights; lefthand LED turns off.
d. Press the B/M—mode key.	B—mode appears at left; M—mode at right side of CRT. B/M key LED lights.
e. Move the trackball.	B—mode depth cursor line should sweep across B—mode display.
f. Press the B/M1/M2 key.	B—mode image appears on left; M1 and M2 M—modes appear on right side of CRT. M1 LED lights.
g. Move the trackball.	Coarse dotted line moves. This is the M1 M—mode sampling cursor.

4–2–22 Program Control

Operator Action	Verifiable RT 6000/RT 6800 Action
a. Press the B/M—mode key.	B/M—mode display appears.
b. Press the B—mode/Program key.	B—mode is replaced by enlarged M—mode display.
c. Press the B—mode/Program key again.	B/M—mode display reappears.
d. Press the B/PD—mode key.	B/PD—mode display appears. (B—mode on left, Pulse Doppler mode on right).
e. Press the B/M/PD—mode key.	B/M/PD—mode display appears. (B—mode on left, M—mode in upper right, PD—mode in ,lower right).
f. Press the B/M1/M2—mode key.	B/M1/M2—mode display appears. (B—mode on left, M1—mode in upper right, M2—mode in, lower right).

4–2–23 Sweep Speed, Pause, Update, Freeze Controls

Operator Action	Verifiable RT 6000/RT 6800 Action
a. Press the B/M—mode key.	B/M—mode display appears.
b. Turn Gain potentiometer clock–wise to increase gain to 80 dB (G:80 on display).	
c. Locate Sweep Speed key in Sweep Speed block, lower panel.	
d. Press Sweep Speed key three times slowly to select Fast, Medium and Slow sweep speeds	M—mode sweep rate should change accordingly. Corresponding Fast, Medium, or Slow LED lights.
e. If available, turn on the Strip Chart Recorder (SCR). Then press the Fast, Medium, and Slow Sweep Speed Keys.	
f. Turn off SCR.	Printing Paper speed of SCR should change accordingly.
g. Press the B/M—mode key. Move probe on Phantom.	B—mode appears on left. M—mode appears on right.
h. Press Pause key.	B—mode only freezes.
i. Press Pause key again.	B—mode image moves.
j. Press B—mode key.	B—mode display appears.
k. Press Freeze key while moving transducer on Phantom.	B—mode display freezes.
l. Press Freeze key again.	B—mode display moves.

4–2–24 Circ/Area: Distance/Depth Controls.

Operator Action	Verifiable RT 6000/RT 6800 Action
a. Press Circ/Area key.	CIRC + cm and crosshairs appear.
b. Press Set key; draw circle using trackball.	Readout of circle perimeter in cm is displayed.
c. Put + mark in the circle and press End key.	This terminates measurement.
d. Press Off key.	CIRC + cm and circle are erased.
e. Press Dist/Depth key in Measurement block, lower panel.	DIST + cm and crosshairs appear.
f. Press Set key; draw line using trackball.	Straight dotted line and readout of line length (depth) in cm is displayed.
g. Press End key.	This terminates measurement.
h. Press Off key.	DIST + cm and dotted line are erased.

4–2–25 Doppler Units: Doppler Controls

Doppler Mode Controls

Operator Action	Verifiable RT 6000/RT 6800 Action
a. Press the B/PD—mode key in Mode block, lower panel.	B—mode image appears on left; PD—mode image on right. B/PD—mode key LED lights. A sampling cursor line with volume indicator appears in B—mode image.
b. Move the trackball up and down.	Volume indicator moves along cursor line. SVD: measurement beneath B—mode image changes.
c. Move the trackball left to right.	Cursor line sweeps across B—mode display.
d. Press the B/M/D—mode key in Mode block,	B—mode image appears on left; lower panel.M—mode image over D—mode image at right. A sampling cursor with volume indicator appears in B—mode image.
e. Move the trackball up and down.	Volume indicator moves along cursor line.
f. Move the trackball left to right.	Cursor line sweeps across B—mode display. SVD: measurement beneath B—mode image changes.
g. Connect a Continuous Wave Doppler (CWD) transducer to the round CW transducer connector.	
h. Connect a second transducer to the righthand transducer connector.	

4–2–25 Doppler Units: Doppler Controls (continued)

Doppler Mode Controls

	Operator Action	Verifiable RT 6000/RT 6800 Action
i.	Press 1/2 key in Probe block, right side of lower panel.	LED beside “2” lights; B—mode from righthand probe appears.
j.	Press the Single CWD key in Probe block, lower panel.	Single CWD LED lights; CW doppler display appears.
k.	Press the Single CWD key again.	Single CWD LED turns off; LED beside “2” on 1/2 key lights; B—mode is reselected.
l.	Press 1/2 key to select probe 1.	LED beside “1” lights; B—mode from lefthand probe appears.

Doppler Units: Audio Volume Control

a.	Ensure that the Display Intensity potentiometer is turned halfway up.	
b.	Press B/PD—mode key.	B/PD—mode display appears.
c.	Turn Audio Volume potentiometer clockwise and counterclockwise.	Sound increases when pot is turned clockwise; decreases when pot turned counterclockwise.

Doppler Units: Vel Scale, SVL, SVS, Phase, Baseline Keys

a.	Press B/PD—mode key. Ensure probe 1 is selected.(LED lighted beside “1” on 1/2 key).	B—mode/Pulse Doppler mode display occurs.
b.	Press Vel Scale key in Doppler block, middle panel.	Vel Scale key LED lights.
c.	Turn the large unmarked potentiometer Doppler controls counterclockwise.	F and R overlays on PD display decrease next to the in value.
d.	Turn the unmarked potentiometer clockwise.	F and R overlays increase in value.
e.	Press SVL (Sample Volume Length) key in Doppler block, middle panel.	SVL key LED lights.
f.	Turn unmarked potentiometer counterclockwise.	SVL parameter decreases.
g.	Turn unmarked potentiometer counterclockwise.	SVL parameter increases.
h.	Press Baseline key in Doppler block, middle panel.	Baseline key LED lights. Baseline appears at bottom of PD image.
i.	Turn unmarked potentiometer clockwise, one notch at a time.	Baseline rises in approx. 2 cm increments to top of mode display.

4—2—25 Doppler Units: Doppler Controls (continued)

Doppler Units: Spec Invt: Spec Trace Controls

Operator Action	Verifiable RT 6000/RT 6800 Action
a. Move baseline up 1/3 screen with the unmarked potentiometer.	Baseline key LED lights. Baseline appears at bottom of D—mode image.
b. Press Spec Invt key in Doppler block, middle panel.	Spec Invt key LED. lights; PD image inverts as evidenced by inverted baseline.
c. Press Spec Invt key again.	Spec Invt key LED turns off; PD image and baseline return to non—inverted positions.

Doppler Units: Doppler Mode Gain

a. Turn Gain potentiometer clockwise.	PD—mode image brightens; G: gain reading increases.
b. Turn Gain potentiometer counterclockwise.	PD—mode image darkens to black; G: gain reading decreases.

Doppler Units: Time, Vel Controls

a. Press Time key in Measurement block, lower panel.	Time key LED lights; “TIM + MS” appears to left of B—mode display.
b. Press Set key in Measurement block; rotate trackball.	1. Timeline appears. Time is measured in msec from point where Set key was pressed. 2. Time changes in MS display as trackball moves.
c. Press End and Off keys.	Time measurement is erased.
d. Press Vel key in Measurement block; lower panel.	Vel key LED lights; VELO + appears to left of B—mode display.
e. Press Set key in Measurement block; rotate trackball.	1. Timeline appears. Time is measured in msec from point where Set key was pressed. 2. Time changes in VELO display as trackball moves.
f. Press End and Off keys.	Measurement is erased.
g. Press blue New Patient key, right side of lower keyboard.	B—mode image reappears.

4−2−26 VTR (VCR) Equipped Units Only: Front panel VTR Controls

VCR Record Controls

Operator Action	Verifiable RT 6000/RT 6800 Action
a. Turn on VTR.	
b. Press RESET key on VTR.	Video tape counter resets to 0:00:00 (hrs:mins:secs).
c. Insert blank VHS Videocassette into VTR.	
d. Press REC key on VTR: record 30 seconds of the ultrasound image on the monitor. Scan a phantom to obtain movement.	
e. Press REW key on VTR. Rewind tape until tape counter reads 0:00:00.	

VCR Playback Controls

a. Press Play key on lower panel.	After several seconds, VTR image is displayed on monitor.
b. Press Pause key on lower RT 6000/RT 6800 panel.	Video image freezes.
c. Press Pause key again.	Tape playing resumes.
d. Press Play key.	Video image is replaced by current ultrasound image.

Units w/VCRs Only: VCR Rewind, Fast Forward, Counter Reset Controls

a. While holding down unmarked blue key, type K.	Verify tape is rewinding.
b. Press unmarked blue key again.	Verify tape stops.
c. While holding down unmarked blue key, type K.	Verify tape moves fast forward.
d. Press unmarked blue key again.	Verify tape stops.
e. While holding down unmarked blue key, type a period.	Verify tape counter resets to all zeroes.

4−2−27 SCR (LSR) Equipped Units Only: SCR Controls

Operator Action	Verifiable RT 6000/RT 6800 Action
a. Press SCR PWR rocker switch to turn on Strip Chart Recorder.	
b. Press Page key on RT 6000/RT 6800 lower panel.	Page key LED lights; SCR outputs a few feet of paper with current screen image, then stops.

4–2–27 SCR (LSR) EquippedUnits Only: SCR Controls (continued)

Operator Action	Verifiable RT 6000/RT 6800 Action
c. Press Strip key on RT 6000/RT 6800 lower panel.	Strip key LED lights; SCR continuously feeds paper with current screen image.
d. Press Strip key again.	Strip Chart recording stops.
e. Turn off SCR.	

Misc, Blue Key Tests

a. While holding down unmarked blue key, type A.	Analog curve appears.
b. While holding down unmarked blue key, type A again.	Verify analog curve disappears.
c. While holding down unmarked blue key, type D.	Verify whitescale overlay disappears, leaving sector display and grayscale.
d. While holding down unmarked blue key, type D again.	Verify whitescale overlay reappears.
e. While holding down unmarked blue key, type H.	Verify Blue Key Help Menu appears.
f. Press **ENTER** key.	Verify B—mode image reappears.

4–2–28 Date Change Test

Operator Action	Verifiable RT 6000/RT 6800 Action
a. Press **CONTROL, C** and **D** keys. H:Hospital Name) [Ent] = **D**	Display = Change (D:Date F:Film T:Time
b. Press **ENTER** key.	Display = Change Date = (MM/DD/YY)
c. Type in current date.	
d. Press **ENTER** key.	The date will be displayed in the upper left corner of the screen.
e. Turn RT 6000/RT 6800 off and on.	Date entered will still be displayed.

4–2–29 Time Change Check

Operator Action	Verifiable RT 6000/RT 6800 Action
a. Press **CONTROL, C** and **T** keys.	Display = Change (D:Date F:Film T:Time H:Hospital Name) [Ent] = **T**
b. Press **ENTER** key.	Display = Change Time (HH/MM) [Ent] =

4—2—29 Time Change Check (continued)

Operator Action	Verifiable RT 6000/RT 6800 Action
c. Enter hours (1—24), a slash and minutes (1—59). You must enter two digits for the hours and two digits for the minutes.	For example: “04/45”
d. Press **ENTER** key.	Counting commences from the new time now dis–played in the upper left corner of the screen.
e. Turn RT 6000/RT 6800 off and on.	Time entered will still be displayed.

4–2–30 Hospital Name Check

Operator Action	Verifiable RT 6000/RT 6800 Action
a. Press **CONTROL, C** and **H** keys.	Display = Change (D:Date F:Film T:Time H :Hospital Name) [Ent] = **H**
b. Press **ENTER** key.	Display = Change Hospital Name (26) [Ent] =
c. Enter hospital or doctor’s name (up to 26 alphanumeric characters)	The name is displayed.
d. Press **ENTER** key.	The name will be displayed in the upper left comer of the screen.
e. Turn RT 6000/RT 6800 off and on.	Hospital and doctor entered will still be displayed.

4–2–31 Polaroid Equipped Units Only: Film Development Beep Time Check

Operator Action	Verifiable RT 6000/RT 6800 Action
a. Press **CONTROL, C** and **F** keys.	Display = Change (D:Date F:Film T:Time H:Hospital Name) [Ent] = **F**
b. Press **ENTER** key.	Display = Change Film Beep (0:off 1:30 2:45 3:60) [Ent] =
c. Type a 2; then type **ENTER** key.	The 45 second development period is entered into memory. This is the development time default setting.
d. Press the Camera key. Monitor the time lapse between hearing the shutter trip and hearing the beep.	Development period should equal 45 seconds.

4−2−32 System Parameter Test

Operator Action	Verifiable RT 6000/RT 6800 Action
a. Press **CONTROL, D** and **S** keys.	Display = Display Parameter (S:System X:Xducer A:Abbr [Ent] = **S**
b. Press **ENTER** key.	System parameters are displayed.
c. Press any key to Exit.	Screen returns to previous scan.

4−2−33 Transducer Parameter Display Test

Operator Action	Verifiable RT 6000/RT 6800 Action
a. Press **CONTROL, D** and **X** keys.	Display = Display Parameter (S:System X:Xducer A:Abbr [Ent] = **X**
b. Press **ENTER** key. the image screen.	The transducer parameters will be displayed on
c. Press **ENTER** key to Exit.	Screen returns to previous scan.

4−2−34 Abbreviation Display Test

Operator Action	Verifiable RT 6000/RT 6800 Action
a. Press **CONTROL, D** and **A** keys.	Display = Display Parameter (S:System X:Xducer A:Abbr [Ent] = **A**
b. Press **ENTER** key.	The abbreviation list is displayed.
c. Press any key to Exit.	Screen returns to previous scan.

4−2−35 Echo Level Measurement (In Traced Area) Test

Operator Action	Verifiable RT 6000/RT 6800 Action
a. Press Freeze key.	Image freezes.
b. Press **CONTROL, E** and **0** (zero) keys.	Display = Keys. Echo level (0:Free 1:3 2:6 3:12 H:Histo) [Ent] = **0**
c. Press **ENTER** key.	The measurement cursor appears on the screen.
d. Position the cursor using the trackball.	
e. Press **SET** key.	The cursor will turn into a dot.
f. Use the trackball to trace the circumference of any object. Ensure the beginning and end of the outline meet (or slightly overlap).	Circumference is traced on the screen.

4—2—35 Echo Level Measurement (In Traced Area) Test (continued)

Operator Action	Verifiable RT 6000/RT 6800 Action
g. Press **SET** key.	
h. Use trackball to move cursor anywhere inside the traced area.	
i. Press **END** key. The area is highlighted for moment.	The Area result is displayed at the left (cm^2) and a the echo level is displayed inside the traced area.
j. Press **OFF** key.	Echo level data is erased.

4–2–36 Echo Level Measurement (Within 3 mm Box) Test

This control function allows you to measure the gray level within one of the three echo sample box sizes (3,6, or 12 mm).

Operator Action	Verifiable RT 6000/RT 6800 Action
a. Freeze the image.	
b. Press **CONTROL, E** key.	Display = Echo level (0:Free 1:3 2:6 3:12 H:Histo) [Ent] = _
c. Type in 1.	
d. Press **ENTER** key.	The selected 3 mm box cursor will appear on the image screen.
e. Position the box cursor in any area.	
f. Press **END** key.	The box will be highlighted briefly. The echo level will be displayed beside the box cursor.
g. Press **OFF** key.	Echo level overlays are erased.

4–2–37 Echo Level Histogram (For Traced Area) Test

This function allows you to measure the echo level within a traced area and display a histogram.

Operator Action	Verifiable RT 6000/RT 6800 Action
a. Freeze the image.	
b. Press **CONTROL, E, H** and **0** (zero) keys.	Display = Echo Histogram (0:Free 1:32:63:12) [Ent] = **0**
c. Press **ENTER** key.	The measurement cursor appears.
d. Use the trackball to move the cursor to the desired position.	
e. Press **SET** key.	Measurement cursor changes into a dot (out–line cursor)

4—2—37 Echo Level HIstogram (For Traced Area) Test (continued)

Operator Action	Verifiable RT 6000/RT 6800 Action
f. Use the trackball to trace the circumference of an object. Ensure the beginning and end of the outline meet or slightly overlap.	The outline is displayed on screen as you trace.
g. Press **SET** key.	Measurement cursor is displayed at the edge of the outline.
h. Use the trackball to move the cursor anywhere inside the traced area.	
i. Press **END** key.	Area is displayed, **H** appears outside the trace, and a histogram is displayed on the right of the screen along with the mean, mode and percent of mode.
j. Press **OFF** key.	Histogram display is erased.

Mean : Average gray level.

Mode : The gray level occurring most frequently.

Percent of mode : A higher percent of mode means that the gray level is narrowly dispersed throughout the histogram sample; a lower percent means the gray level has a wider dispersion.

4−2−38 Echo Level Nistogram (3 mm Box: Histogram) Test

This control function allows you to measure the gray level within a 3,6, or 12 mm box, using a histogram.

Operator Action	Verifiable RT 6000/RT 6800 Action
a. Freeze the image.	
b. Press **CONTROL, E** and **H** keys.	Display = Echo Histgram (0:Free 1:3 2:6 3:12) [Ent] =
c. Type in a 1.	Display=(0:Free 1:32:63:12) [Ent]=**1**
d. Press **ENTER** key.	A 3 mm box appears.
e. Position the box cursor on the area of interest.	
f. Press **END** key.	The box will be highlighted. The echo level value will be displayed by the box cursor. A histogram is displayed on the right of the screen along with the mean, mode and percent of mode.
g. Press **OFF** key to erace measurement.	The following will be erased: Cursors, Traces/Out−lines, Results and Histogram.
h. Press Freeze key to unfreeze image.	

4−2−39 Gray Background Level Test

This control function allows you to make the screen background lighter or darker. Note that there is only one background adjustment for all of the image formats (2D, M—mode and Doppler).

Operator Action	Verifiable RT 6000/RT 6800 Action
a. Press **CONTROL, G** and **O** (alpha) keys.	Display = Gray Background (O:Outer I:Inner) [Ent]=**O**_
b. Press **ENTER** key.	Display = Gray Value Outer (0 to 63) [Set_up = 0] [Ent] = _
c. Type in 63.	
d. Press **ENTER** key.	The background behind the image becomes white.
e. Press **CONTROL, G, O** (alpha) and **ENTER** keys.	
f. Press **0** (zero), **ENTER**.	Background becomes black0.

4−2−40 2D Gray Background Level Control Test

This control function allows you to lighten or darken the 2D sector image display without affecting the background. A 0 setting results in darkest gray; 63 results in lightest gray.

Operator Action	Verifiable RT 6000/RT 6800 Action
a. Press **CONTROL, G, I** and **B** keys.	Display = Gray Background Inner (B:2D M:M D:Q) [Ent] = **B**_
b. Press **ENTER** key.	Display = Gray Value Inner for 2D (0 to 63) [Set−Up = 45] [Ent] = _ The current value will be displayed (in this example “45”).
c. Type in a 63 to obtain brightest value.	
d. Press ENTER key.	The B—mode display becomes white.
e. Turn RT 6000/RT 6800 off, then on.	The B—mode display becomes darker (default grayscale setting = 0).

4−2−41 M—mode Gray Background Level Control Test

This control function allows you to adjust the M—mode image display making it lighter or darker. To adjust the background of the image screen, use the Control GO function.

Operator Action	Verifiable RT 6000/RT 6800 Action
a. Press B/M—mode key.	B/M—mode appears.

4—2—41 M—mode Gray Background Level Control Test (continued)

Operator Action	Verifiable RT 6000/RT 6800 Action
b. Press **CONTROL, G, I** and M keys.	Display = Gray Background Inner (B:2D M:M D:Q) [Ent] = **M**_
c. Press **ENTER** key.	Display = Gray Value Inner for M (0 to 63) [Set_Up = 45] [Ent] = _
d. Type in a 63 to obtain brightest value.	The current value will be displayed (in this example “45”).
e. Press **ENTER** key.	The M—mode display becomes white.
f. Turn RT 6000/RT 6800 off, then on.	The M—mode display becomes darker (default grayscale setting = 0).

4−2−42 Doppler Units: Doppler Gray Background Level Control Test

This control function allows you to lighten or darken the Doppler (Q−mode) image.

Operator Action	Verifiable RT 6000/RT 6800 Action
a. Press B/PD key.	B mode/Pulse Doppler display appears.
b. Press **CONTROL, G, I** and **D** keys.	Display = Gray Background Inner (B:2D M:M D:Q) [Ent] = **Q**_
c. Press **ENTER** key.	Display = Gray Value Inner for Q (0 to 63) [Set_Up = 45] [Ent] = _ The current value will be displayed (in this example “45”).
d. Type in a 63 to obtain brightest value.	
e. Press **ENTER** key.	The Doppler image becomes white.
f. Turn power switch off, then on.	Display reverts to default brightness setting.

4−2−43 Help Menu−Test

Operator Action	Verifiable RT 6000/RT 6800 Action
a. Type **CONTROL, H** and **ENTER** keys.	The Help menu, listing all to the softkey codes and their functions, is displayed.
b. Type any softkey to Exit.	Previous display reappears.

4–2–44 2D Image Invert Control Test

This control function allows you to invert the 2D image, displaying it as White on a Black background or Black on a White background.

Operator Action	Verifiable RT 6000/RT 6800 Action
a. Press B—mode key.	B—mode image appears.
b. Press **CONTROL, I** and **B** keys.	Display = Image/2D Invert (1 :W/B 2:B/W) [Ent]=_ The current selection will be highlighted.
c. Type 2.	Display = Image/2D Invert (1 :W/B 2:B/W) [Ent] = **2**
d. Press **ENTER** key.	The image screen will invert to black on white background. (Image looks white).
e. Type **CONTROL, I, B** and **1**.	The image screen will return to white on black background. (Image looks dark gray).
f. Press **ENTER** key.	

4–2–45 Doppler Units: Doppler Image Invert Control Test

This control function allows you to invert the Doppler image, displaying it as White on a Black background or Black on a White background.

Operator Action	Verifiable RT 6000/RT 6800 Action
a. Select an image display format that includes Doppler.	
b. Press **CONTROL, I** and **D** keys.	Display = Image/Q Invert (1:W/B 2:B/W) [Ent] = Q The current selection will be highlighted.
c. Type in “2”.	Display = Image/2D Invert (1:W/B 2:B/W) [Ent] = **2**
d. Press **ENTER** key.	The image screen will invert to black on white background.
e. Type **CONTROL, I, D** and **1** keys.	Display = Image/Q Invert(1:W/B 2:B/W) [Ent]=**1**
f. Press **ENTER** key.	The image screen will return to white on black background.

4–2–46 M—mode Image Inversion Test

This control function allows you to invert the M—mode image, displaying it as White on a Black background or Black on a White background.

	Operator Action	Verifiable RT 6000/RT 6800 Action
a.	Press the B/M—mode key.	Combination B—mode/M—mode appears.
b.	Press **CONTROL, I** and **M** keys.	Display = Image/M Invert (1:W/B 2:B/W)[Ent]= **M** The current selection will be highlighted.
c.	Type the 2 key.	Display = Image/M Invert (1:W/B 2:B/W) [Ent] = **2**
d.	Press **ENTER** key.	The image screen will invert to black on a white background.
e.	Type **CONTROL, I, M** and **1** keys.	Display = Image/M Invert (1:W/B 2:B/W) [Ent] = **1**
f.	Press **ENTER** key.	The image screen will return to white on a black background.

4–2–47 SCR Equipped Units Only: SCR PRINT (Comments on Stripchart) Test

When this function is “on”, comments (including the date, hospital name, time and system settings) will be printed at the end of a stripchart.

	Operator Action	Verifiable RT 6000/RT 6800 Action
a.	Press **CONTROL, J** key.	Display = LSR (C:Character P:Page On Frz S:Page on Stp N = Narrow) = _
b.	Press **C** key.	Display = LSR Character Print On/Off [Ent] Depending on the last selection, either “On” or “Off” will be highlighted.
c.	Press **ENTER** key. If “Off” was highlighted, proceed to step d; otherwise repeat steps a–c above.	
d.	Press SCR Power switch to ON position.	
e.	Press B/M—mode key on RT 6000/RT 6800.	Combination B—mode/M—mode image appears.
f.	Press Strip key on RT 6000/RT 6800. Wait 10 seconds.	SCR prints stripchart.
g.	Press Strip key again.	Stripchart stops with date, hospital, machine settings, etc. printed at top.
h.	Press **CONTROL, J, C** and **ENTER** keys.	Comment function is disabled.

4–2–48 SCR Equipped Units Only: SCR PRINT ("FREEZE" KEY) Test

Turning on this function causes the SCR to make a page print each time you freeze the ultrasound image.

Operator Action	Verifiable RT 6000/RT 6800 Action
a. Press **CONTROL, J** and **P** keys.	Display = SCR Page Print When System Frozen On/Off [Ent] =_ The current selection will be highlighted.
b. Press **ENTER** key. If "Off" was highlighted proceed to step c; otherwise repeat step a. to enable function.	
c. Press Freeze key on RT 6000/RT 6800.	Image freezes; SCR prints page print, then stops.
d. Press Freeze key again.	Image unfreezes.
e. Press **CONTROL, J, P** and **ENTER** keys.	Page printing on image freezing is disabled.

4–2–49 SCR Equipped Units Only: SCR PRINT (Page Print after Strip Chart Recording) Test

When this function is "on", a single page print will be printed after a stripchart recording (M—mode or Doppler mode) is completed.

Operator Action	Verifiable RT 6000/RT 6800 Action
a. Press **CONTROL, J** and **S** keys.	Display = SCR Page Print When Chart Drive Stopped On/Off [Ent] = **S** The current selection will be highlighted.
b. Press **ENTER** key. If "Off" was highlighted, proceed to step c. Otherwise, repeat steps a and b to enable function.	
c. Press Strip key on RT 6000/RT 6800, wait five seconds.	Strip chart streams from SCR.
d. Press Strip key again.	Strip charting stops, page print appears, paper stops.
e. Press SCR power switch to turn off SCR.	

4–2–50 VCR Equipped Units Only: VCR Search Speed Test

This control function allows you to program the blue key on the RT 6000/RT 6800 front panel to search the videotape in the VCR at one of four speeds selected by the operator.

Operator Action	Verifiable RT 6000/RT 6800 Action
a. Turn on the VCR; load a tape.	
b. Press **CONTROL, K** key.	Display = VCR Seach Speed (1 :x1 2:x2 3:x6 4:x10) [Ent]=_ The current selection is highlighted.

4—2–50 VCR Equipped Units Only: VCR Search Speed Test (continued)

Operator Action	Verifiable RT 6000/RT 6800 Action
c. Type a 1.	Display = VCR Seach Speed (1:x1 2:x2 3:x6 4:x10) [Ent] = _ The 1:x1 selection is highlighted.
d. Press the **ENTER** key.	The x1 realtime VCR search speed is enabled.
e. Press the unmarked blue key on RT 6000/RT 6800 front panel.	
f. Press the **L** key on RT 6000/RT 6800.	Tape searches backward at normal speed. (As seen on monitor).
g. Press the Stop key, then press the R key on the RT 6000/RT 6800.	Tape searches backward at normal speed.
h. Repeat steps b through g, substituting 2, 3 and 4 for 1 in step c. This selects the x2, x6 and x10 search speeds, respectively.	

4–2–51 2D Image Size Test

This control function changes the size of the 2D image on the screen during B/M—mode.

Operator Action	Verifiable RT 6000/RT 6800 Action
a. Press the B—mode key on RT 6000/RT 6800.	2D (B—mode) sector image appears on screen.
b. Press **CONTROL** and **M** keys.	Display= 2D Size Program (1:2/32:1/33:3/2–1/3) [Ent] =_ The current selection is highlighted.
c. Type a 2.	Display= 2D Size Program (1:2/3 2:1/3 3:3/2~1/3) [Ent]=**2** The 2:1/3 selection is highlighted.
d. Press **ENTER** key.	New 2D size factor is entered into memory.

4–2–52 SECTOR/PRGM Test

Operator Action	Verifiable RT 6000/RT 6800 Action
a. Press the B/M—mode key.	B—mode display fills one third of screen. M—mode display fills two thirds of screen.
b. Press the Sector/Program key on RT 6000/RT 6800.	Full size M—mode image appears.
c. Press the Sector/Program key again.	1/3 B—mode image; 2/3 M—mode image appears.

4–2–52 SECTOR/PRGM Test (continued)

Operator Action	Verifiable RT 6000/RT 6800 Action
d. Press the Sector/Program key again.	Full size M—mode image reappears.
e. Turn RT 6000/RT 6800 power off, then on.	Sector/Program operation is disabled. B—mode image appears.

4–2–53 Acoustic Power Display Test

This control function allows you to display the Acoustic Power level on the image screen. Note that Acoustic Power toggle returns to its default on or off condition on powerdown.

Operator Action	Verifiable RT 6000/RT 6800 Action
a. Press **CONTROL, O** and **A 1,** keys.	Display = **Acoustic Power Display (0:Off 1:On) [Ent]=** The current selection is highlighted.
b. Press **ENTER** key.	Depending on the last selection, the Acoustic Power will be on (displayed) or off (not displayed). Display = AP:xx EE:xx GM:xx LMT:xx
c. On upper panel, turn Acoustic Power pot clockwise, then counterclockwise.	AP:xx in display increases to 100 (dB); decreases to 0 (dB)

4–2–54 Error Display Time Test

Various error messages are displayed when the wrong key is pressed, etc. This control function allows you to set the length of time these messages are displayed on the screen.

Operator Action	Verifiable RT 6000/RT 6800 Action
a. Press **CONTROL, O** and **E** keys.	Display = Change Error Display Time (0:Off :3 2:5 3:7) [Ent] = _ The current selection is highlighted.
b. Type a 2 for a five second error display.	
c. Press **ENTER** key.	The error display time is entered into memory.
d. If RT6000/RT6800 is equipped with a VCR, turn VCR power off via its power switch. Otherwise, continue to next step.	
e. Press Play key on RT 6000/RT 6800 . Verify error message is displayed for five seconds.	Error message is displayed.
f. If RT6000/RT6800 is equipped with a VCR, turn VCR power back on.	

4–2–55 Doppler Units: Doppler Frequency Marker Test

This control function allows you to display the frequency marker on the Doppler Waveform.

Operator Action	Verifiable RT 6000/RT 6800 Action
a. If not connected, connect a doppler probe to the RT 6000/RT 6800; press the B—mode/PD key.	Combination B—mode/Pulse Doppler image appears.
b. Press **CONTROL, O** (alpha) & **F 1** keys.	Display = Frequency Marker (0:Off 1 :On) [Ent] = The current selection is highlighted.
c. Press **ENTER** key.	Doppler frequency is displayed. Verify doppler fre quency is displayed in lower left corner of doppler display.
d. Press **CONTROL, O, F 0** and **ENTER** keys.	Doppler frequency display disappears.

4–2–56 2D Transducer Parameter Test

This control function programs the system settings for each transducer in 2D mode. It also programs the **AUTO** Key for recalling these settings.

Operator Action	Verifiable RT 6000/RT 6800 Action
a. Press the B—mode key.	B—mode (2D) image is displayed.
b. Press the Dynamic Range ▲ key until DR: 60 is displayed on the CRT.	
c. Press **CONTROL, P** and **B** keys.	Display = Preset Xducer Parameter (B:2B M:M D:D) [Ent]= **B**
d. Press **ENTER** key.	The current B—mode (2D) image parameter of 60 dB dynamic range FOR SELECTED PROBE ONLY is entered into memory.
e. Turn RT 6000/RT 6800 off, then on.	The new default dynamic range setting should read DR: 60.

4–2–57 M—Mode Parameter Preset Test

This control function programs the system settings for each transducer in—M mode. This also programs the **AUTO** key for recalling these settings.

Operator Action	Verifiable RT 6000/RT 6800 Action
a. Press B/M—mode key.	B—mode/M—mode images appear.
b. Set Dynamic Range for 60 dB as displayed on CRT.	
c. Press **CONTROL, P** and **M** keys.	Display = Preset Xducer Parameter (B:B M:M D:D) [Ent] = **M**

4–2—57 M—Mode Parameter Preset Test (continued)

Operator Action	Verifiable RT 6000/RT 6800 Action
d. Press **ENTER** key.	The current M—mode parameter of 60 dB dynamic range FOR SELECTED PROBE is entered into memory.
e. Turn RT 6000/RT 6800 off, then on. Select B/M—mode.	The default dynamic range setting on CRT should equal 60 dB FOR SELECTED ATTACHED PROBE ONLY.
f. Press the Dynamic Range ▼ key to select 54 dB dynamic range as displayed on the CRT.	
g. Press **CONTROL, P** and **M** keys.	Display = Preset Xducer Parameter (B:B M:M D:D) [Ent] = **B**
h. Press **ENTER** key.	The current B—mode (2D sector) image parameters are entered into memory FOR SELECTED PROBE ONLY.
i. Turn RT 6000/RT 6800 off, then on. Select B/M—mode.	The default dynamic range setting on CRT should equal 60 dB FOR SELECTED PROBE ONLY.

4–2–58 Doppler Units: Doppler Parameter Preset Test

Operator Action	Verifiable RT 6000/RT 6800 Action

Use this control function to program the system settings for each Doppler transducer in 2D mode. This also programs the AUTO key for recalling these settings.

a. Press the B/PD—mode key.	B—mode/Pulse Doppler mode display appears.
b. b. Press the **SVL** key. Use the unmarked pot in the Doppler controls to set the sample volume length to 7 mm, or **SVL**:7. (The sample box changes size as you turn the unmarked pot).	
c. Press the Wall Filter key. Adjust the unmarked pot in the Doppler controls for a 400 Hz cutoff frequency (WF:400).	
d. Press **CONTROL, P** and **D** keys.	Display = Preset Xducer Parameter (B:B M:M D:D) [Ent] = **D**
e. Press **ENTER** key.	The current Doppler mode image parameters are entered into memory FOR SELECTED PROBE ONLY.
f. Turn RT 6000/RT 6800 off, then on. Press B/PD—mode key.	The default settings = previously programmed **AUTO** key settings.

4−2−59 Dotted Line Between Measurement Cursors Test

Operator Action	Verifiable RT 6000/RT 6800 Action
a. Press **CONTROL Q** and **1** keys.	Display = Dot Line Display (0:Off 1 :On) [Ent] = _ The current selection is highlighted.
b. Press **ENTER** key.	
c. Operate trackball.	Dots should appear as trackball is rotated.
d. Press **CONTROL, Q1** and **ENTER** keys to turn off dot line display function.	

4−2−60 Register Abbreviations Test

Use this control function to program in any abbreviations. Once you have done this, you can use the COMMENT function to display them on the screen.

Operator Action	Verifiable RT 6000/RT 6800 Action
a. Press **CONTROL, R** and **A** keys.	
b. Press **ENTER** key.	Display = Reg./Abbreviation (Cap./Abbr.) [Ent] = **A**
c. Type abbreviation. For example: *S/Stenosis.*	
d. Press **ENTER** key.	The word *S/Stenosis* appears.
e. Press **CONTROL** key.	The word *S/Stenosis* appears.
f. Press **COMMENT** key, then hold down the **SHIFT** key and press **S.**	The word *S/Stenosis* appears.

4−2−61 Register Footswitch Test

Use this control function to program the footswitch to activate the FREEZE function, play the VCR or operate the SCR.

Operator Action	Verifiable RT 6000/RT 6800 Action
a. Press **CONTROL, R** and **F** keys.	Display = Reg./Foot SW. (1:Freeze 2:VCR P. 3:SCR DRV.) The current selection is highlighted.
b. If 1:Freeze is not highlighted, type a 1. Otherwise, proceed to step c.	
c. Press **ENTER** key.	Freeze footswitch fucntion is enabled.
d. Scan a phantom in any mode.	

4−2−61 Register Footswitch Test (continued)

Operator Action	Verifiable RT 6000/RT 6800 Action
e. Press footswitch one time.	Image freezes.
f. Press footswitch again.	Image becomes real time again.

4−2−62 35 mm Polaroid/35 mm Equipped Units Only: Register Record by Polaroid/35 mm Test

This control functions permits footswitch control of recording by Polaroid camera (using 667 Polaroid film) or 35 mm camera.

Operator Action	Verifiable RT 6000/RT 6800 Action
a. Press **R, G** and **ENTER** keys.	Display = Reg./Rec Gamma (1:Polaroid 667 2:35 mm Film) [Ent] = _ The current selection is highlighted.
b. Type a 1, if unit is Polaroid—equipped; a 2 if it is 35 mm−equipped.	
c. Press **ENTER** key.	
d. Press footswitch.	A click is heard, indicating the camera shutter has operated.

4−2−63 Pattern Package Test

This control function programs in either the Cardiac or Body Pattern Package. Then use the Land R keys along with the trackball to select the patterns to be displayed on the image screen.

Operator Action	Verifiable RT 6000/RT 6800 Action
a. Press CONTROL, R and J keys.	Display = Reg./Pattern Package (1 :Cardiac 2:Body) [Ent]=_ The current selection is highlighted.
b. Type a 2.	Body pattern package is selected.
c. Press **ENTER** key.	Body pattern package is entered into memory.
d. Press **CONTROL** key.	**CONTROL LED** lump goes off.
e. Press dual B−mode key twice.	Dual B−mode display appears.
f. Press **L** in Pattens block of keys.	Menu appears on left side of screen. Menu reads: Supine, R. OBLQ, L. OBLQ, Left, Neck, R Neck, L Neck, Man.
g. Press B—mode key.	B−mode display appears.

4—2—63 Pattern Package Test (continued)

Operator Action	Verifiable RT 6000/RT 6800 Action
h. Press dual B—mode key twice.	Dual B—mode display appears.
i. Press **R** in Pattens block of keys.	Menu appears on right side of screen. Menu reads: Supine, R. OBLQ, L. OBLQ, Left, Neck, R Neck, L Neck, Man.
j. Rotate trackball to display the eight body patterns.	
k. Repeat steps a through j. Type a 1 to select the standard cardiac pattern package. (This is the default patterns display).	

4−2−64 M−Mode Peak Hold Control Test

Use this control function to prevent blurring of a fast moving object such as a heart valve during two−channel M—mode display.

Operator Action	Verifiable RT 6000/RT 6800 Action
a. Press B/M—mode key.	B—mode/M—mode appears.
b. Press **CONTROL, W** and **1**.	Display = M—mode Peak Hold (0:Off 1 :On) [Ent] =_ The current selection is highlighted.
c. Press **ENTER** key.	If Peak Hold is toggled on.
d. Press **W, 0** and **ENTER** to disable the M—mode peak hold function.	

4−2−65 2D Edge Enhancement Test

Operator Action	Verifiable RT 6000/RT 6800 Action
a. Press B—mode key.	B—mode image appears.
b. Press **CONTROL, X** and **B** keys.	Display = Image Edge Enhancement for B (1 to 6) [ENT]=_
c. Type in a number 6(1 = no (0 dB) edge enhancement 6 = greatest (6 dB) edge enhancement)	
d. Press **ENTER** key.	Six dB edge enhancement factor is entered into memory.
e. Observe edge enhanced 2D (B—mode) image.	Image should appear sharper, more defined.

4–2–66 M—Mode Edge Enhancement Test

Operator Action	Verifiable RT 6000/RT 6800 Action
a. Press B/M key; then press the B—mode/Prog. key until only M—mode display appears.	
b. Observe M—mode display as you scan a phantom.	
c. Press **X** and **M** keys.	Display = Image Edge Enhancement for M (1 to 6) [Ent]=_
d. Type in a 6.	1 = no edge enhancement 6 = greatest edge enhancement
e. Press **ENTER** key.	Display = **Control_** Six dB edge enhancement factor is entered into memory.
f. Observe M—mode display as you scan a phantom with a probe.	Image should appear sharper, more defined than before change.

4–2–67 SCR Equipped Units Only: SCR Edge Enhancement Test

Operator Action	Verifiable RT 6000/RT 6800 Action
a. Turn on SCR power. Press **STRIP** key on RT 6000/RT 6800 lower panel as you scan a Phantom with a probe.	
b. After 10 seconds, press **STRIP** key again. Tear off strip for later comparison.	
c. Press **CONTROL, X** and **L** keys.	Display = Image Edge Enhancement for SCR (1 to 6) [Ent]=_
d. Type in a 6.	1 = no edge enhancement 6 = greater edge enhancement
e. Press **ENTER** key.	Six dB edge enhancement factor is entered into memory.
f. Press **STRIP** key as you scan a Phantom with a probe. Press it again after 10 seconds. Compare stripcharts.	New stripchart should be sharper and have more contrast than old stripchart.

5–1 INTRODUCTION

The RT 6000/RT 6800 is an ultrasound cardiac scanner. Cardiac imaging is done with a narrow beam, narrow aperture transducer, while a wide aperture beam is used for imaging the abdominal region. Wide aperture scanning is also suitable for imaging circulatory organs, embryos, neonates and the kidneys.

5–1–1 Cardiographic Scanner

The RT 6000/RT 6800 Cardiographic Scanner is equipped with a sophisticated, high performance Doppler system that employs Continuous Dynamic Aperture (CDA) and Continuous Dynamic Focus (CDF) to provide superior image quality. The RT 6000/RT 6800 also has color flow mapping as an option that will enhance the diagnostic capabilities of the standard system with doppler only. The standard RT 6000/RT 6800 transducers can operate over a wide range of center frequencies.

5–1–2 Scanning Functions

Besides the functions described above, the RT 6000/RT 6800 is capable of:

a. High frequency M—mode imaging, ECG and PCG processing;
b. Cardiac performance measurements and calculations by means of optional Cardiac Measurement and Calculation software;
c. Impulse, burst wave, and continuous wave Doppler imaging.
d. High Pulse Repetition Frequency (HPRF) operations;
e. Pulse Doppler/Continuous Wave Doppler operations using the same probe.
f. Color flow mapping capabilities in 2D M and doppler modes.

5–2 PRINCIPLES OF ULTRASOUND IMAGING

Ultrasound imaging is based on the sonar principle. A short, high voltage sound pulse is transmitted from the transducer's piezoelectric element into a medium of known density and propagation velocity, in this case, soft tissue.

5–2–1 Ultrasound Vave Travel

As the sound travels out and back, an electronic device is used to measure the travel time, i.e., the ultrasound imaging circuitry. Knowing the travel time (go—return time) and the velocity of the ultrasound wave, the distance traveled can be calculated and displayed on a CRT display monitor.

5–2–2 Reflection

The propagation velocity of an ultrasound wave traveling through different types of body tissue averages 1540 meters per second and is fairly consistent. However, signal reflection from soft tissue averages less than 1 %, while soft tissue—bone interface signal reflections increase to about 48 %. Strong signal reflections appear as lighter images, while weaker signal reflections appear as darker images.

5–2–3 Ultrasound Display Types

Echoes are displayed as a function of distance by one of five methods:

a. Amplitude (A) Mode: (Not available on RT 6000/RT 6800). This is simply a one–dimensional oscilloscope type display showing echo return amplitude on the vertical axis versus body depth on the horizontal axis. (See Illustration 5—1a). If transducers were only equipped with one piezoelectric element and no mechanical positioners, this would be the only display available. However, The RT 6000/RT 6800 transducers contain arrays of up to 64 piezoelectric elements to develop the B—Mode and M—Mode displays discussed below.

b. Brightness (B) Mode: (Available on RT 6000/RT 6800). This two–dimensional display mode permits the operator to see ultrasound images of body tissue, bones and organs. These are the standard displays shown in Illustration 5—1b. They are cross sectional views of the body organs beneath the transducer displayed at their relative depth as measured in centimeters. (The deepest area scanned appears at the bottom of the CRT; the skin next to the transducer appears at the top).

   The B Mode display is obtained by plotting, or mapping, echo source locations and intensities as display pixels.The brightness of each pixel represents the strength or amplitude of the returning echoes. Normally, the brighter the pixel, the stronger the returning echo.

   This display method requires a transducer with an array of piezoelectric elements. The elements in the array are sequentially pulsed and the returning echoes are processed to obtain an image.

c. Motion (M) Mode: (Available on RT 6000/RT 6800). This display is formed by plotting brightness mode information on the vertical axis versus time on the horizontal axis (See Illustration 5—1 c). Motion studies are used to detect fetal heart rates, heart valve functions and other cardiac functions.

d. Continuous Wave (CW) Mode: (Available on RT 6000/RT 6800). This doppler mode was developed for echocardiographic blood flow surveys. In this mode, echo returns from all body depths are sampled and converted to video. Good focus at all body depths permits the operator to measure the high blood flow velocities typical in cardiac pathology.

e. Pulse Echo (PE) Mode: (Available on RT 6000/RT 6800). Anotherdoppler mode display used in echocardiography. This mode isolates problem areas, measuring blood flow in a specific vein or artery. Depth of focus is shallow. Only echo returns from a specific body depth are sampled.

f. Color Flow Mapping (CFM) Mode: (Available as an option on RT 6000/RT 6800). CFM Mode uses the same principles as doppler, however the system will assign a color value corresponding to the blood flow direction. Different mapping modes can be used to display direction only, direction and flow velocity, or direction, flow velocity and variance (turbulent flow). The CFM Mode is useful to survey a large cardiac region and can display flow direction, velocity and turbulence simultaneously.

5–2–3 Ultrasound Display Types (continued)

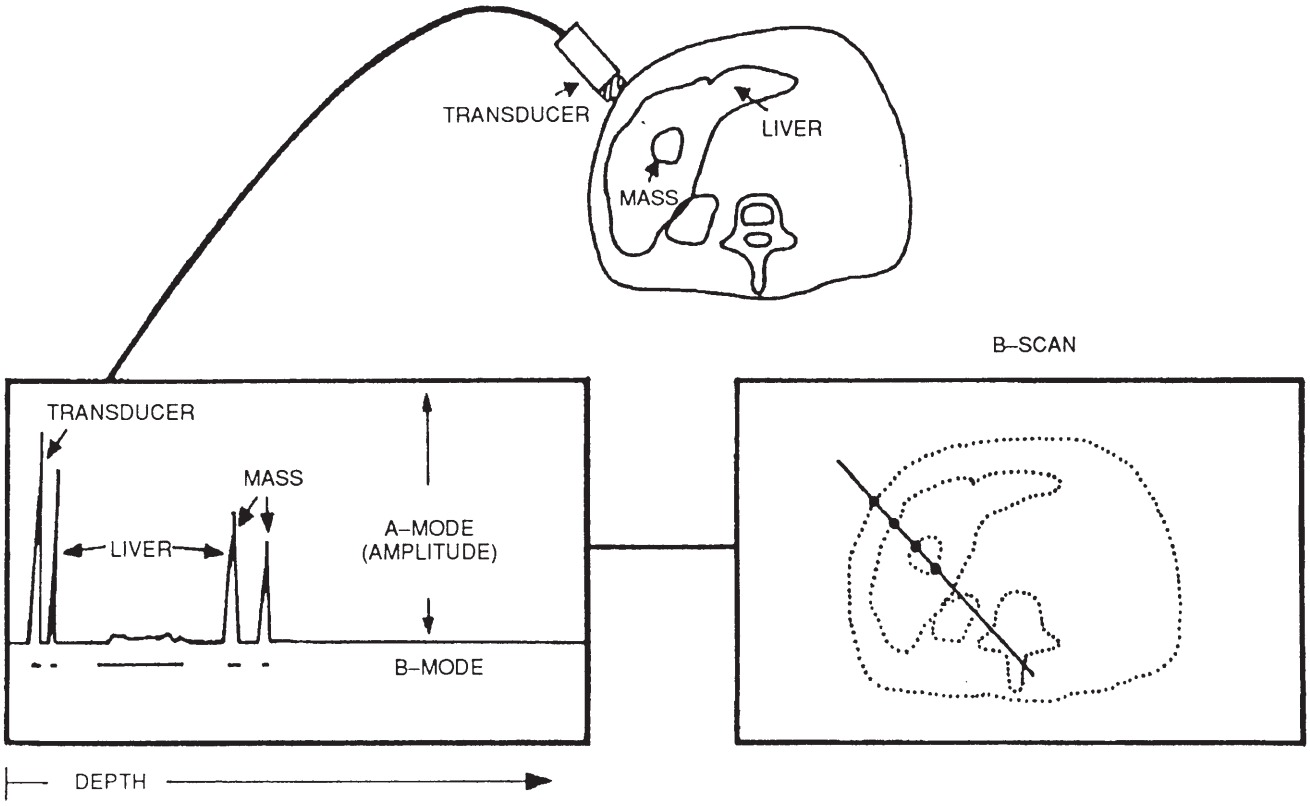

ILLUSTRATION 5–1a

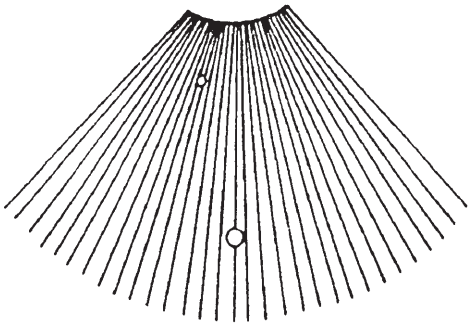

ILLUSTRATION 5—1b

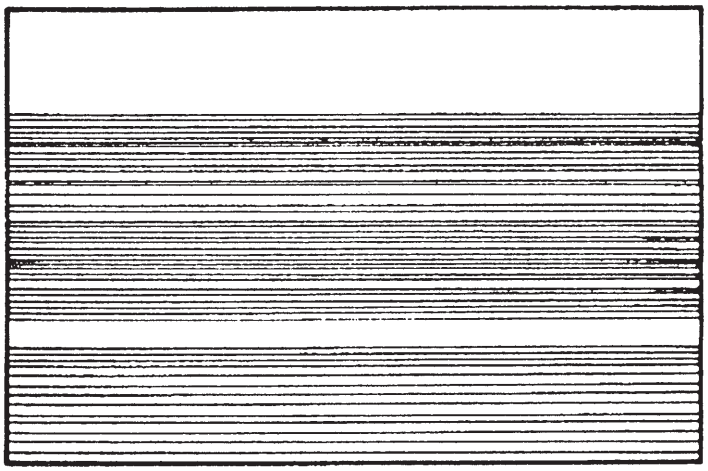

ILLUSTRATION 5—1 c

5–2–4 Beam Focusing

Ultrasound energy from a group of elements is formed into a beam for scanning purposes. This beam must be focused, or narrowed, down, to a specific area called the focal zone to obtain a sharp image at the body depth under examination. Focal zone depth depends on four factors:

a. Ultrasound signal frequency, which varies according to transducer type.
b. Aperture size of transducer array (the number of piezoelectric transducer elements). This is another reason for the need for different transducer types.
c. Radius of curvature of each group of piezoelectric elements. (Each group of elements is shaped like a parabola to focus its beam at a certain body depth).
d. The type of electronic focusing method employed. The RT 6000/RT 6800 utilizes phase delay techniques to optimize focus at specific body depths.

Transducer Types
Since a narrow beam is necessary to resolve small anatomical detail, it would be ideal to produce a uniformly narrow ultrasound beam able to penetrate to any body depth. Unfortunately, this is currently impossible. Therefore, different transducers have been designed to optimize focus at specific body depths.

5–2–5 Echo Signal Processing

Echo returns vary in amplitude, frequency and return time. Not only is this caused by varying acoustic impedances of different types of body tissue and bone, it is also caused by the attenuation of the ultrasound signal as it travels through the body.
Typically, a dynamic range of more than 100 dB exists between the strongest near field echoes and the weakest far field echoes just above the noise threshold. The strong near field echo returns must be logarhythmically compressed prior to signal detection to compensate for increased signal attenuation of echoes returning from deeper body depths. This permits a uniform display of the echo source, regardless of body depth. Signal compression is done by the Log Amplifier Assy.

5–2–6 Time Gain Compensation (TGC)/Tirne Frequency Compensation (TFC)

TGC varies echo gain to compensate for the greater attenuation occurring to echoes from greater body depths.

1. On power up, RT 6000/RT 6800 software assigns default values for ten TGC gain levels to echoes from ten body depth zones. The operator can modify these settings by means of ten TGC slider potentiometers on the front panel.
2. Time frequency compensation (TFC) varies the bandpass frequency of the detector in the analog receiver circuitry. This compensates for shifts in the bandpass center frequency spectrum of echoes returning from greater body depths.

5–2–7 Doppler Operation

This function is performed by the I Doppler, Audio, and FFT cards in the card cage. Continuous Wave (CW) and Pulse Echo Doppler modes are available. (A special two element CWB doppler probe is required for CW operation).

5–2–7 Doppler Operation (continued)

Doppler mode monitors venal, arterial, and/or cardiac blood flow volume and velocity, two important cardiac parameters. It operates on the Doppler principal, where the sound made by a traveling object (such as blood) shifts in frequency as it moves past the dopplertransducer. The FFTcards samples frequency and amplitude shifts in the doppler signal to measure blood flow volume and velocity.

5–2–8 Optional Color Flow Operation

This function is performed by the optional color flow module (CFMP1 and CFMP2) in the card cage. Color 2D, color M—Mode, and color doppler modes are available. CFM can be performed with all standard RT 6000/RT 6800 sector transducers.

5–2–8 Optional Color Flow Operation (continued)

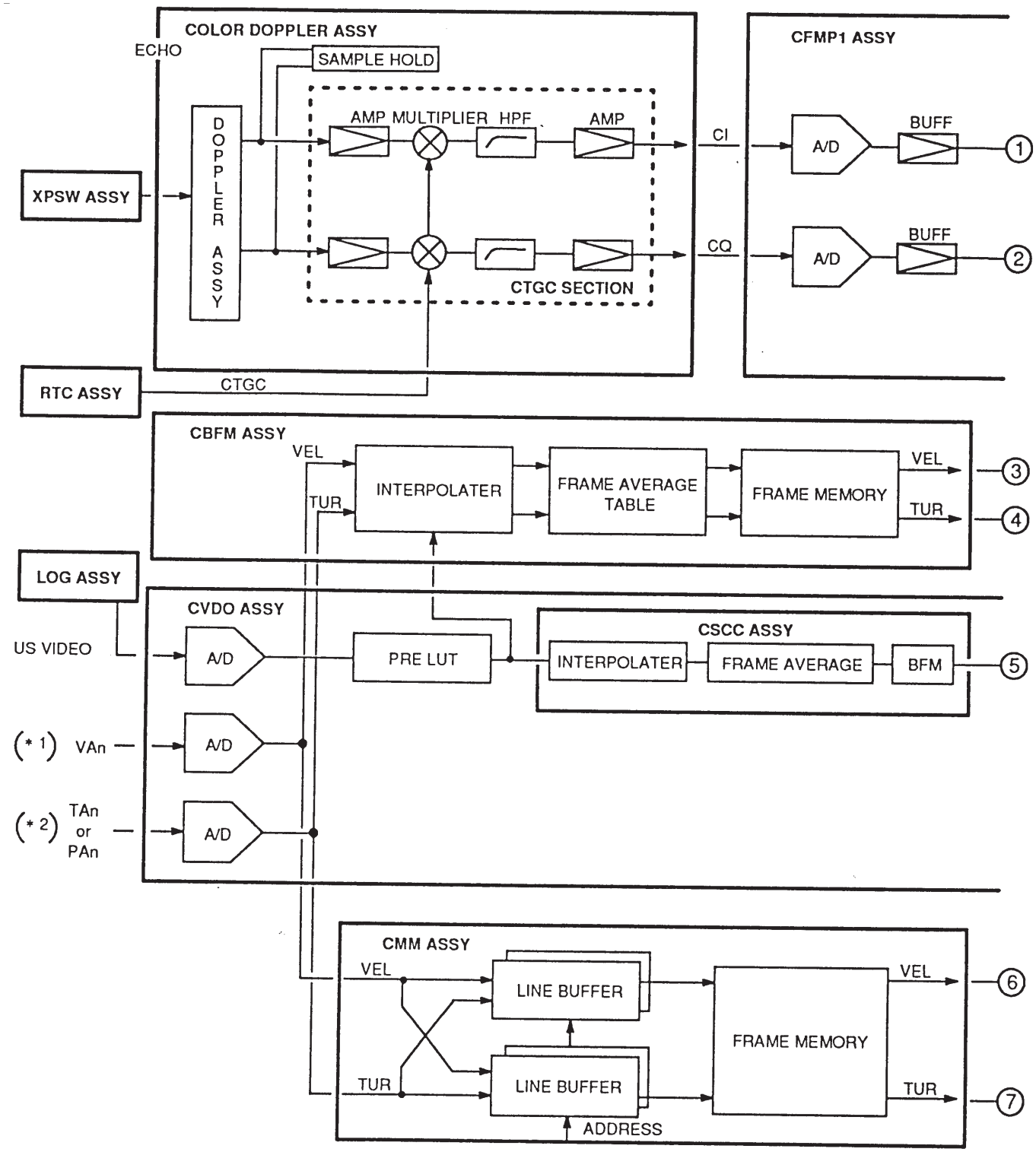

COLOR FLOW MAPPING SUBSYSTEM
ILLUSTRATiON 5–2(a)

5–2–8 Optional Color Flow Operation (continued)

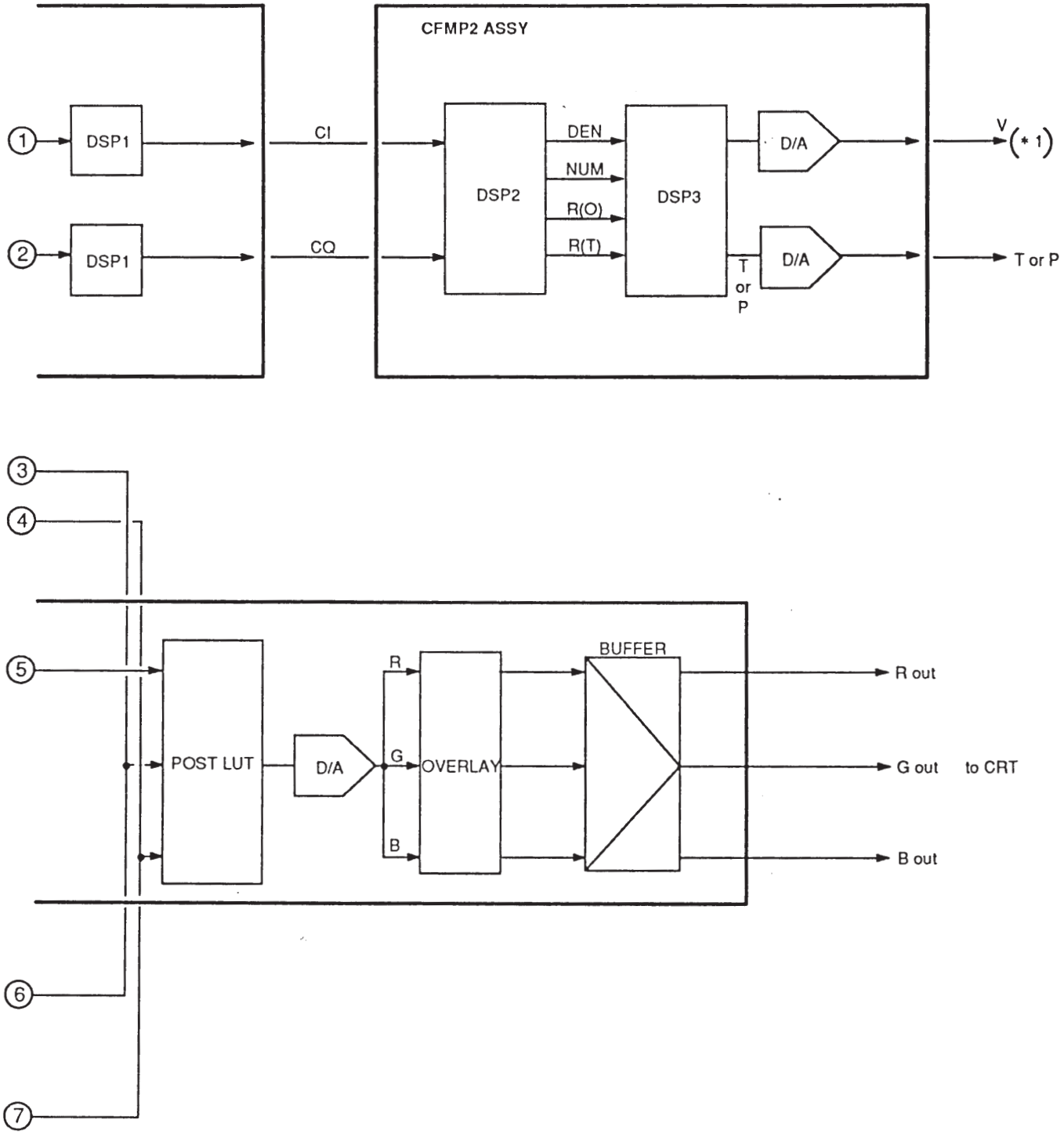

COLOR FLOW MAPPING SUBSYSTEM
ILLUSTRATION 5–2(b)

5–3 RT 6000/RT 6800 SYSTEM DESCRIPTION

The RT 6000/RT 6800 is divided into the major components shown below:

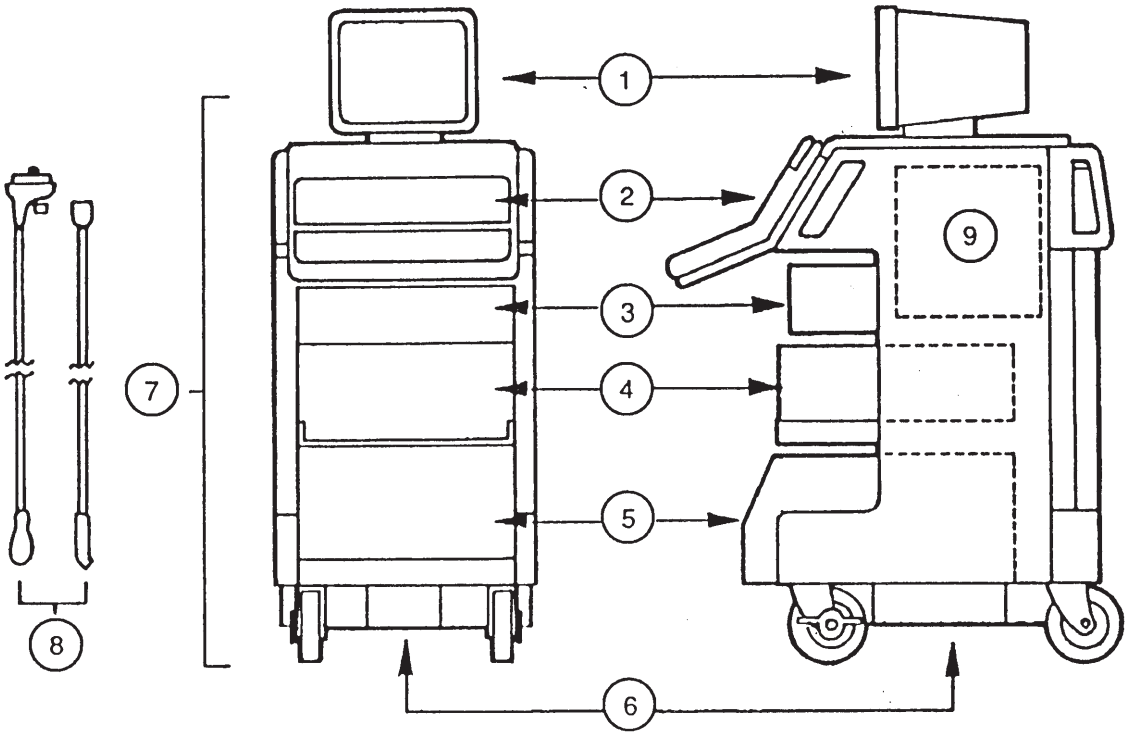

① Monitor CRT (12” diag.)

② Keyboard

② Camera Unit (Optional)

④ VTR (Video Tape Recorder) (Optional)

⑤ SCR (Strip Chart Recorder) (Optional)

⑥ Power Supplies

⑦ Console

⑧ Transducers

⑨ Card Cage

RT 6000/RT 6800 MAJOR COMPONENTS
ILLUSTRATION 5–3

5–3–1 RT 6000/RT 6800 Card Cage

The card cage contains up to 21 PC Boards that control, monitor, and process the transmit and receive echographic signals. Table 5—1 lists these PC Boards and their corresponding card slots in the card cage:

TABLE 5–1
PC BOARD LOCATIONS

CARD SLOT	PC BOARD
CNA/B00	PHYSIOLOGICAL SIGNAL SCALE AMPLIFIER 2 (PSSA2) ASSY
CNA/B01	AUDIO ASSY
CNA/B02	COLOR DOPPLER ASSY (OPTIONAL)
CNA/B03	LOG AMPLIFIER (LOG) ASSY
CNA/B04	CROSSPOINT SWITCH (XPSW) ASSY
CNA/B05	CONTINUOUS DYNAMIC APERTURE & FOCUS (CDAF) ASSY
CNA/B06	PRIMARY DELAY SUM (PDS) ASSY
CNA/B07	TRANSMITTER (TRA) ASSY
CNA/B08	REAL TIME CONTROLLER (RTC) ASSY
CNA/B09	MASTER CONTROLLER (MST) ASSY
CNA/B10	I/O PROCESSOR (IOP) ASSY
CNA/B11	COLOR FLOW MAPPING PROCESSOR 1 (CFMP1) ASSY (OPTIONAL)
CNA/B12	COLOR FLOW MAPPING PROCESSOR 2 (CFMP2) ASSY (OPTIONAL)
CNA/B13	RECORDER SCAN CONVERTER (RSC) ASSY (OPTIONAL)
CNA/B14	WAVEFORM DISPLAY 2 (WD2) ASSY
CNA/B15	FAST FOURIER TRANSFORM (FFT) ASSY
CNA/B16	FRAME MEMORY 3 (FM3) ASSY
CNA/B17	COLOR SCAN CONVERTER (CSCC) ASSY
CNA/B18	CCINE ASSY (OPTIONAL)
CNA/B19	COLOR VIDEO DATA OUTPUT (CVDO) ASSY
CNA/B20	VIDEO TAPE RECORDER PLAYBACK (VTRPB) ASSY (OPTIONAL)

Note: The Physiological Signal Isolation Amplifier (PSIA) Assy described below is located behind the ECG/PCG control panel on the rear of the mother board. The High Voltage (HV) Assy is mounted below the i/o connectors at the rear of the machine.

5–3–2 System Block Diagram

Illustration 5—4 is a system block diagram of the RT 6000/RT 6800 Ultrasound System. To simplify the system, the circuit Board assemblies have been grouped together in several subsystems. Table 5—2 shows these subsystems, their functions, and their PC Boards. PC Board descriptions follow Table 5—2.

TABLE 5–2
RT 6000/RT 6800 SUBSYSTEMS

SUBSYSTEM	PC BOARDS	SUBSYSTEM FUNCTION
ANALOG ECHO PROCESSOR	TRA ASSY PDS ASSY CDAF ASSY XPSW ASSY LOG ASSY HV ASSY CONN ASSY	DEVELOPS TRANSMIT SIGNAL; PROCESSES ECHOES
DIGITAL ECHO PROCESSOR	CSCC ASSY FM3 ASSY CVDO ASSY	COLOR SCAN CONVERTS, STORES DIGITIZED ECHO DATA; CONVERTS IT TO VIDEO
SYSTEM CONTROLLER	MST ASSY IOP ASSY RTC ASSY I/O CONN ASSY	PROVIDES SYSTEM CONTROL; IOP ASSY INTERFACES WITH KEYBOARD, TRACKBALL, TGC SLIDER POTS, etc. VIA I/O CONN ASSY; RTC ASSY CONTROLS ANALOG, DOPPLER AND CFM CARDS UNDER IOP ASSY CONTROL
DOPPLER PROCESSOR	COLOR DOPPLER ASSY AUDIO ASSY FFT ASSY	DEVELOPS CW (CONTINUOUS WAVE AND PE (PULSE ECHO) DOPPLER DISPLAYS)
CFM PROCESSOR (OPTIONAL)	CFMP1 CFMP2	DEVELOPS 2D, M–MODE AND DOPPLER COLOR DISPLAY
ECG/PCG/AUX PROCESSOR	PSIA ASSY PSSA2 ASSY WD2 ASSY	AC ISOLATES, AMPLIFIES, FILTERS, LIMITS AND VIDEO CONVERTS ECG/PCG/AUX PHYSIOLOGICAL SIGNAL TRACES
MISCELLANEOUS	VTR PB ASSY (OPTIONAL) RSC ASSY (OPTIONAL)	PERMITS CALCULATIONS ON VTR DATA; SCAN CONVERTS ECHOES FOR STRIP CHART RECORDER

This page is left blank intentionally.

5–3–2 System Block Diagram (continued)

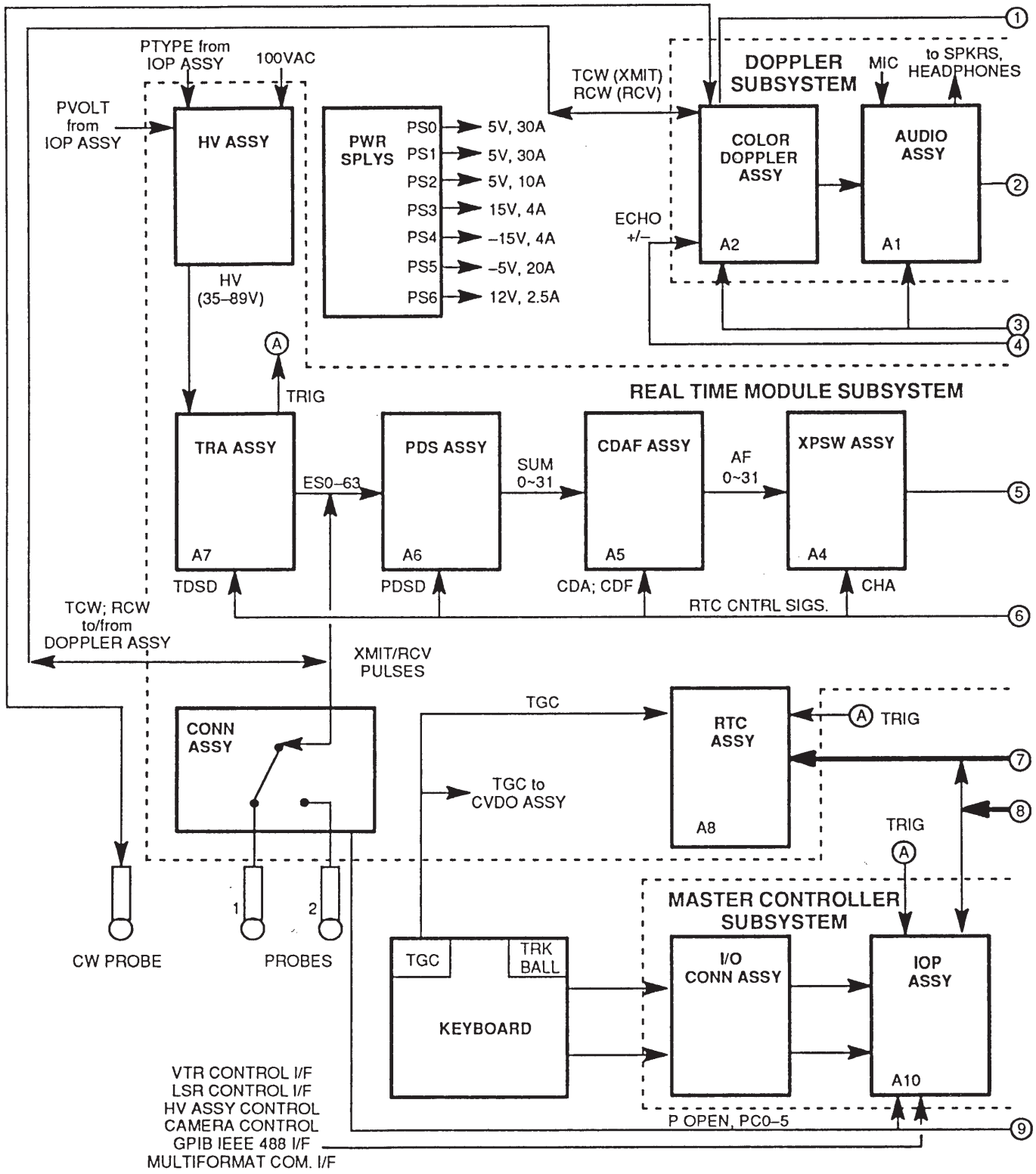

RT 6000/RT 6800 SYSTEM BLOCK DIAGRAM
ILLUSTRATION 5–4(a)

5–3–2 System Block Diagram (continued)

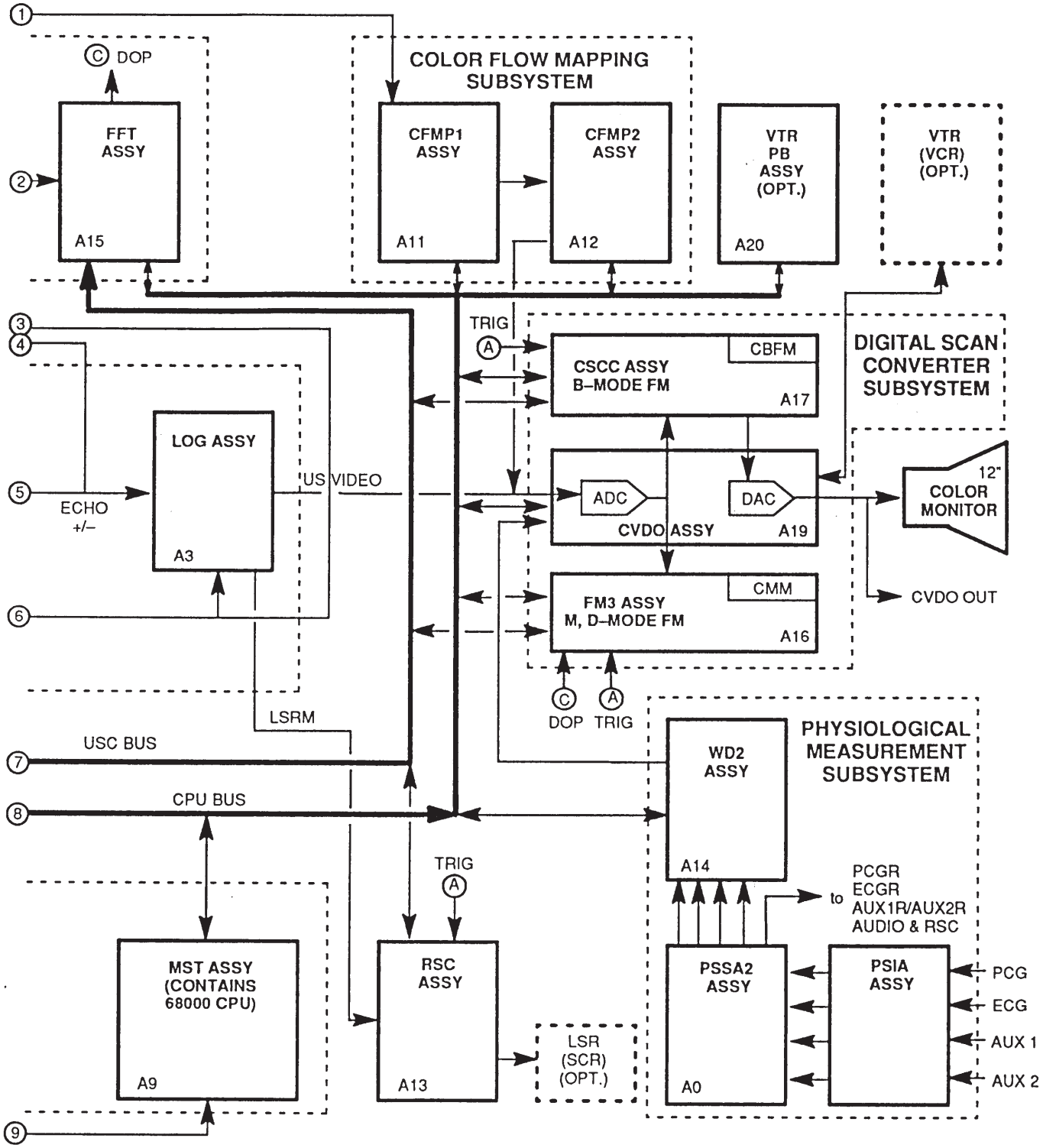

RT 6000/RT 6800 SYSTEM BLOCK DIAGRAM
ILLUSTRATION 5–4(b)

5–4 PC BOARD ASSY DESCRIPTIONS

5–4–1 Transmitter (TRA) Assy

Function	: Based on RTC inputs, develops transmit pulses; steers transmit pulses to proper transducer elements for different image modes.
Controlled By	: Real Time Controller (RTC) Assy via USC Bus.
Inputs Come From	: HV Power Supply; RTC Assy, IOP Assy.
Outputs Sent To	: Connector Assy, Color Doppler Assy, etc.

Functional Description

Referring to Illustration 5—5, the Transmitter Assy Block Diagram, this PC Board can be divided into two sections:

a. Transmit Wave Generator;
b. Beam Steering Section;
c. Switch and Safety Circuit;
d. Transmit Clocks Section

1. Transmit Wave Generator: Generates the SINE and SINC transmit waves. The basic pulse repetition frequency (PRF) is determined by Carrier Frequency Select (CF 0—2) from the RTC Assy. Burst Number (BN1—3) from the RTC Assy defines the number of transmit pulses fired during one transmit period.

2. Beam Steering Section: This section has three functions.

   a. First, its shift registers steer the transmit pulse to the proper element in the transducer array during using TDSD bus delay signals from the RTC Assy.
   b. Second, the HIC stage amplifies the transmit wave using +/− MVE 15 VDC HV Assy signals. These signals are summed with 35 V—89 V HV transmit voltage at a transformer secondary within the HIC to produce the 64 (maximum) transmit pulses sent to the transducer elements.
   c. Third, it low pass filters transmit pulses during Continuous Wave (CW) Doppler mode.

3. Switch and Safety Circuit: This section disables HV transmit voltage and disables transmit wave transmission when HV voltage exceeds specified limits for the operating mode, the CPU overruns (HARTY high), or the probe is not connected (POPEN true). TINH/(Transmit Inhibit) goes low true to disable the transmit pulses.

4. Transmit Clocks Section: This section produces the clock signals required by the TransmitterAssy and the TRIG and TRIG/clocks sent throughout the RT 6000/RT 6800 System.

5–4–1 Transmitter (TRA) Assy (continued)

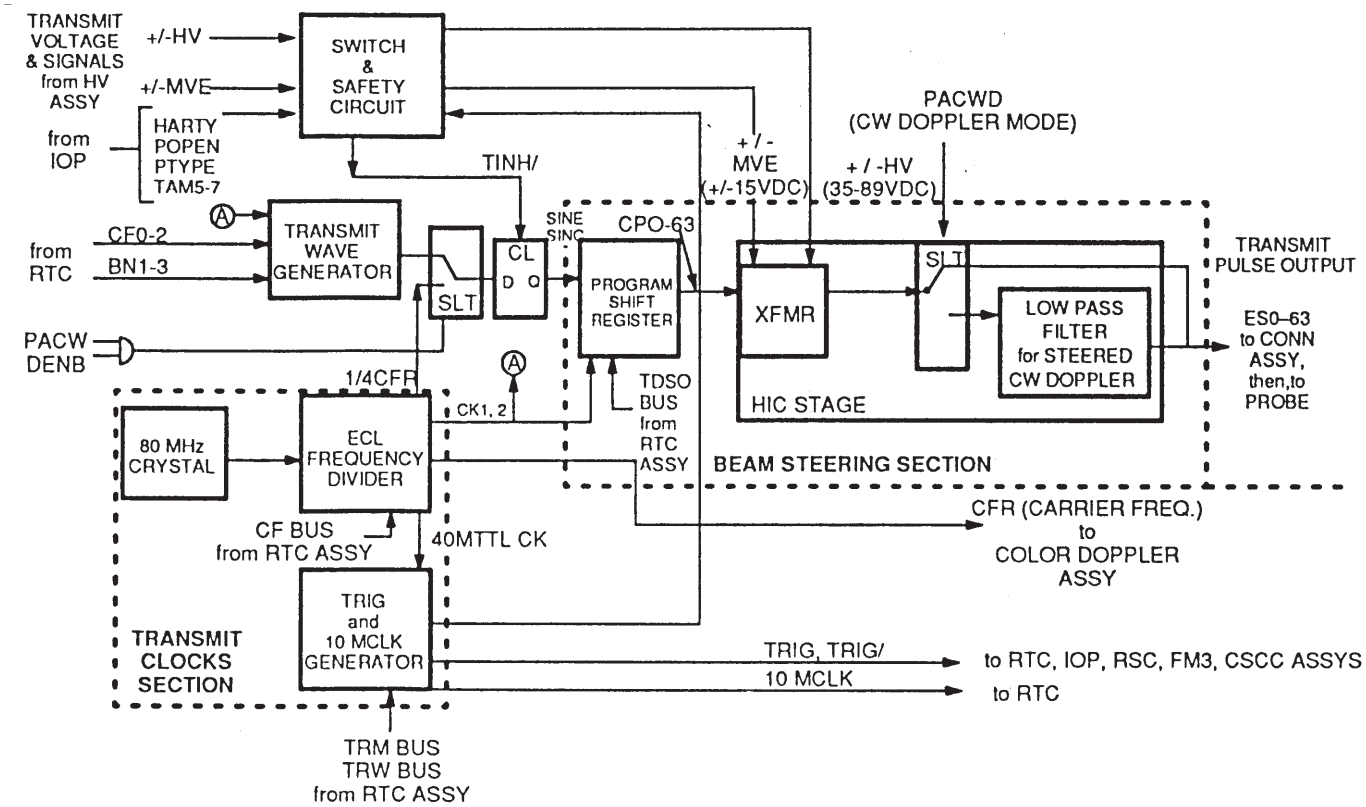

TRANSMITTER ASSEMBLY BLOCK DIAGRAM
ILLUSTRATION 5–5

5–4–2 High Voltage Power Supply Assy

Function : Supplies the variable +/— 35 — 89 VDC transmit pulse voltage to the Transmitter Assy.

Controlled By : IOP Assy via the I/O Connector Assy.

Outputs Sent To : Transmitter Assy

Functional Description

Referring to Illustration 5—6, the HV Assy Block Diagram, this PC Board can be divided into four functional blocks:

a. HV Regulated DC Power Supply;
b. DA Converter;
c. Isolator;
d. HV Disable Circuit.

5–4–2 High Voltage Power Supply Assy (continued)

1. HV Regulated DC Power Supply: This section converts the +/– 1 00VAC input from the secondary of the power transformer into a +/– 35 to +/– 89 V (Approx) transmit pulse supply voltage. The exact voltage produced depends on factors such as ultrasound mode and transducerfrequency and type. In doppler mode, pulse repetition frequency and focus zone also help determine the transmit pulse supply voltage level.

2. Isolator: This section AC isolates the PVOLT, HVS, HART and SHTDWN signals.

3. D/A Converter: The PVOLT bus, which is generated by the IOP Assy, determines the level of the transmit pulse supply voltage. A digital to analog converter converts the digital value to complementary positive and negative analog control voltages. This occurs when HVS/f rom the IOP Assy goes true. These voltages control the +HV and —HV pass FETs in the HV Regulated DC Power Supply to control output of transmit power.

4. HV Disable Circuit: In case of a power failure or catastrophic system failure, SHUTDOWN/and/or HART/signal from the IOP Assy goes low true. This causes this circuit and transistors Q2 and Q3 in the HV Regulated DC Power Supply section to ground the HV outputs.

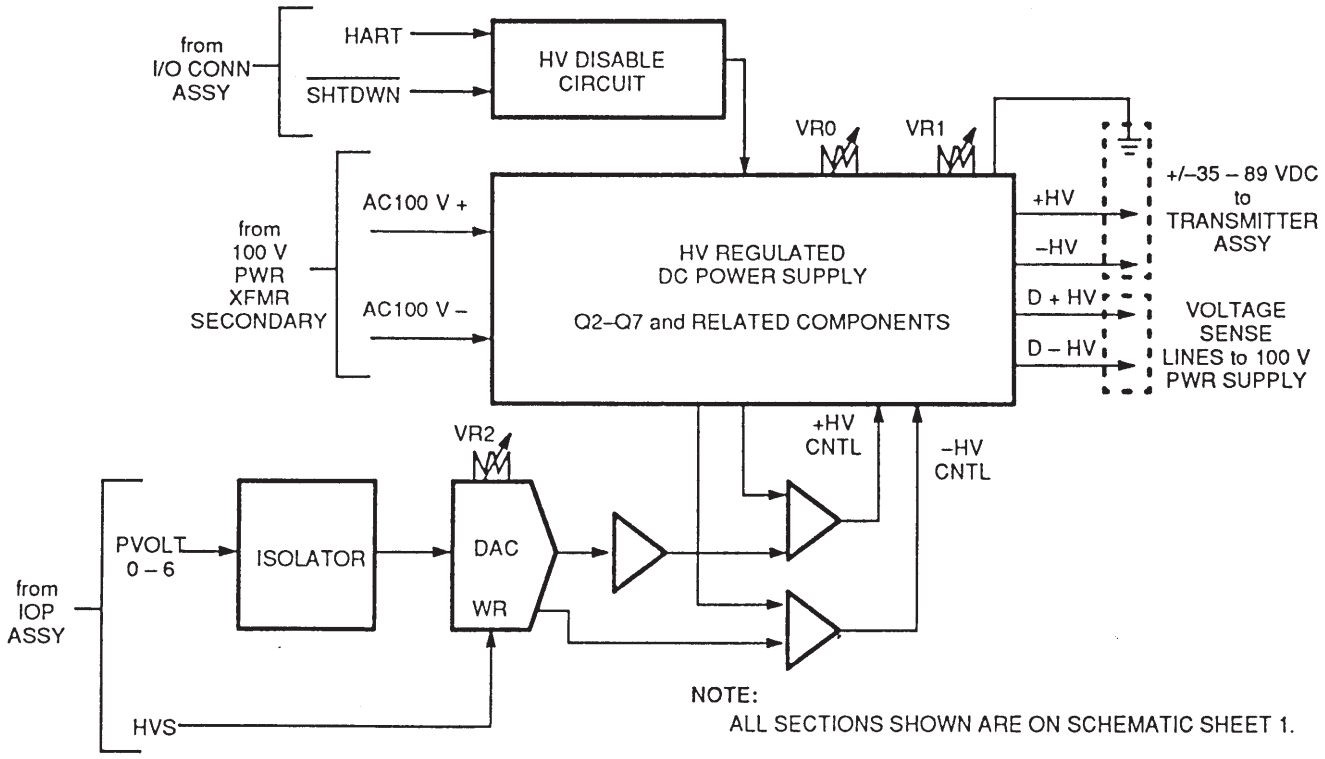

HIGH VOLTAGE (HV) POWER SUPPLY BLOCK DIAGRAM
ILLUSTRATION 5–6

5–4–3 Primary Delay Sum (PDS) Assy

Function : This Board removes the strong body surface echo component and amplifies the echo returns from the Transducer. It also sums adjacent echo return (ES) channels and variably delays the ES signals to produce a 32 channel delayed output from the 64 channel ES input.

Controlled By : RTC Assy via the USC bus.

Inputs Come From : Connector (CONN) Assy, RTC Assy.

Outputs Sent To : Continuous Dynamic Aperture & Focus (CDAF) Assy.

Functional Description

Referring to Illustration 5—7, the PDS Assy Block Diagram, the PDS Assy is divided into two functional blocks:

a. R–Module
b. Summing and Delay Section

1. R—Module: This section contains a limiterfor removing strong body surface echoes and a Pre Gain Amplifier for performing first—stage amplification.

2. Summing and Delay Section: This section sums adjacent echo channels of the 64 channel echo input; then variably delays the paired echo returns to roughly align far field and near field echo returns for later processing.

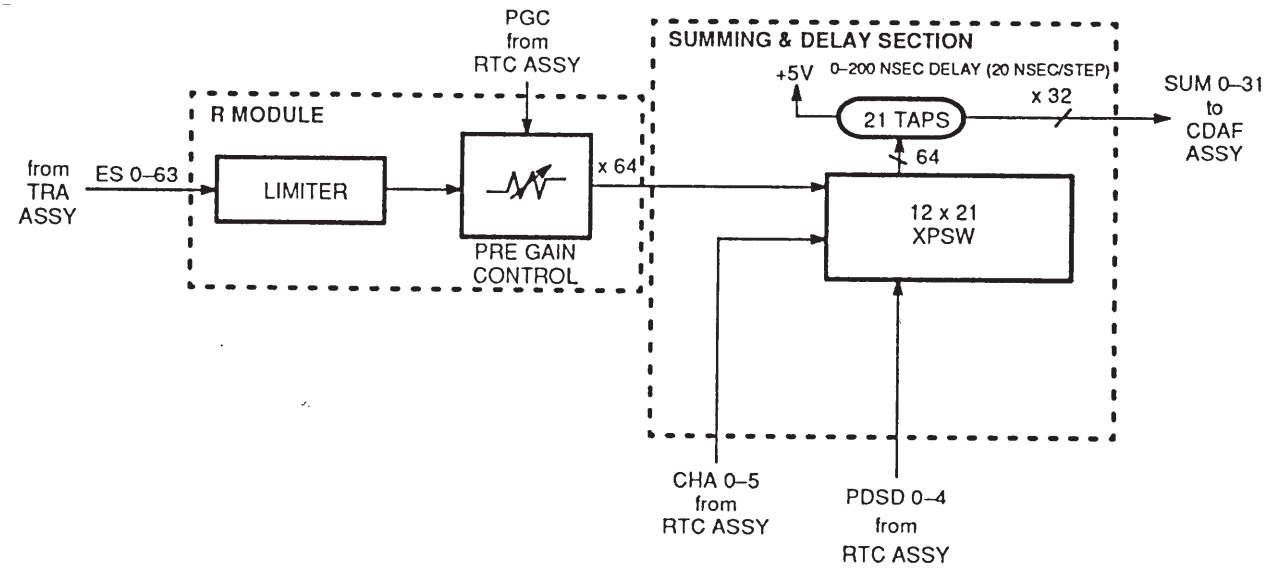

PRIMARY DELAY SUM (PDS) ASSY BLOCK DIAGRAM
ILLUSTRATION 5–7

5−4−4 ContInuous Dynamic Aperture & Focus (CDAF) Assy

Function : Receives the 32 Channel Echo Return SUM bus from the PDS Assy to process them with the continuous dynamic aperture (CDA) and continuous dynamic fo cus (CDF) circuitry.

Controlled By : RTC Assy via the USC bus.

Inputs Come From : PDS Assy and RTC Assy.

Outputs Sent To : Crosspoint Switch (XPSW) Assy.

Functional Description

Referring to Illustration 5—8, the CDAF Assy Block Diagram, the CDAF Assycan be divided into four functional blocks:

a. Summing Section;
b. CDA Module;
c. CDF Module;
d. Impedance Matching Section.

1. Summing Section: Summing op−amps sum the SUM and SUMR return echo signal inputs from the PDS Assy.

2. CDA Module: This section controls the aperture of the transducer array, progressively disabling channels on either end of the array for near field imaging to reduce echo sidelobes. These sidelobes would appear as false images, or artifacts, on the monitor.

3. CDF Module: This section enables received signals to optimize the focus over several focal zones by means of variable delay lines consisting of fixed inductors and variable capacitors. The —2.5 V to +2.5 V CDFF signal controls the amount of delay applied.

4. Impedance Matching Section: This section compensates for the variable impedance induced by the variable delay lines by means of a variably resistant diode bridge. Thus, the output of the CDAF Assy is impedance matched to that of the Crosspoint Switch (XPSW) Assy.

5–4–4 Continuous Dynamic Aperture & Focus (CDAF) Assy (continued)

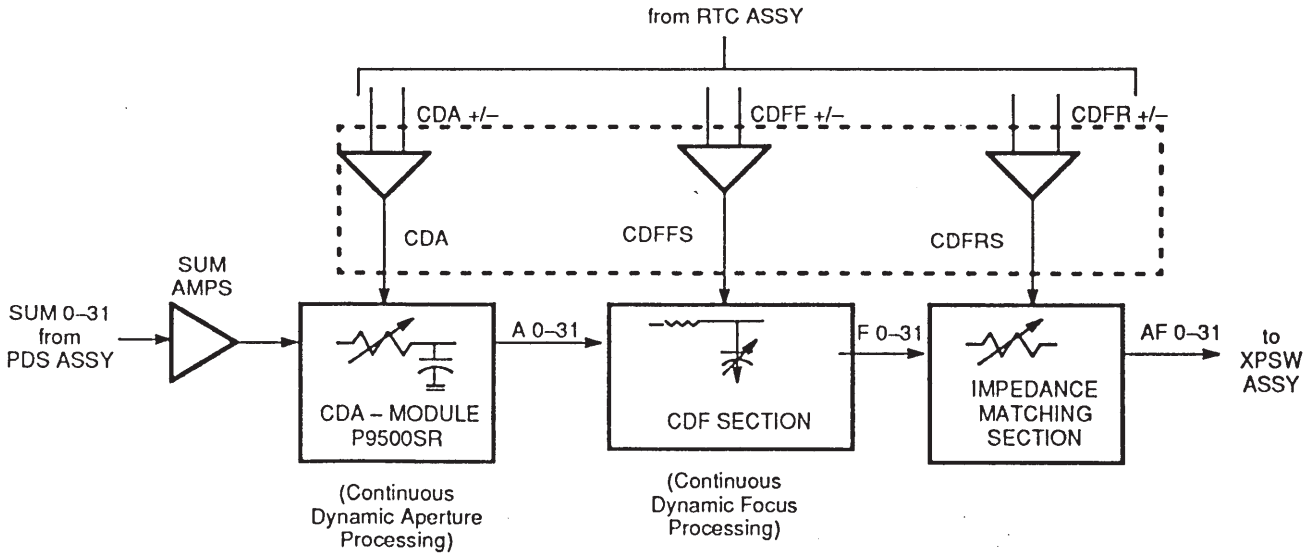

CDAF ASSY BLOCK DIAGRAM
ILLUSTRATiON 5–8

5–4–5 Crosspoint Switch (XPSW) Assy

Function : This PC Board sums the delayed 32 echo return channels into one channel. It also provides a rough secondary delay that complements the fine delay provided by the PDS Assy.

Controlled by : RTC Assy.

Inputs Come From : CDAF and RTC Assemblies.

Outputs Sent To : Log and optional Color Doppler Assemblies.

Functional Description

Referring to Illustration 5—9, the XPSW Block Diagram, the XPSW Assy can be divided into two functional blocks:

a. Crosspoint Switch Section;

b. Delay and Summing Section.

1. Crosspoint Switch Section: This section utilizes several banks of multiplexers to reorganize the 32 echo channels for output, depending on scanline information. CHA 0 — 4 from the RTC Assy selects the multiplexer outputs.

2. Delay and Summing Section: This section provides 48 levels of coarse delay, varying from 0 nsec to 9200 nsec in 200 nsec increments. This coarse delay complements the fine (20 nsec) incremental delay provided by the PDS Assy. It is produced by decoding the SDSD bus from the RTC Assy. This section also parallel to serial converts the echo signals, which are sent to the Log Assy as differential ECHO +/— signal.

5–4–5 Crosspoint Switch (XPSW) Assy (continued)

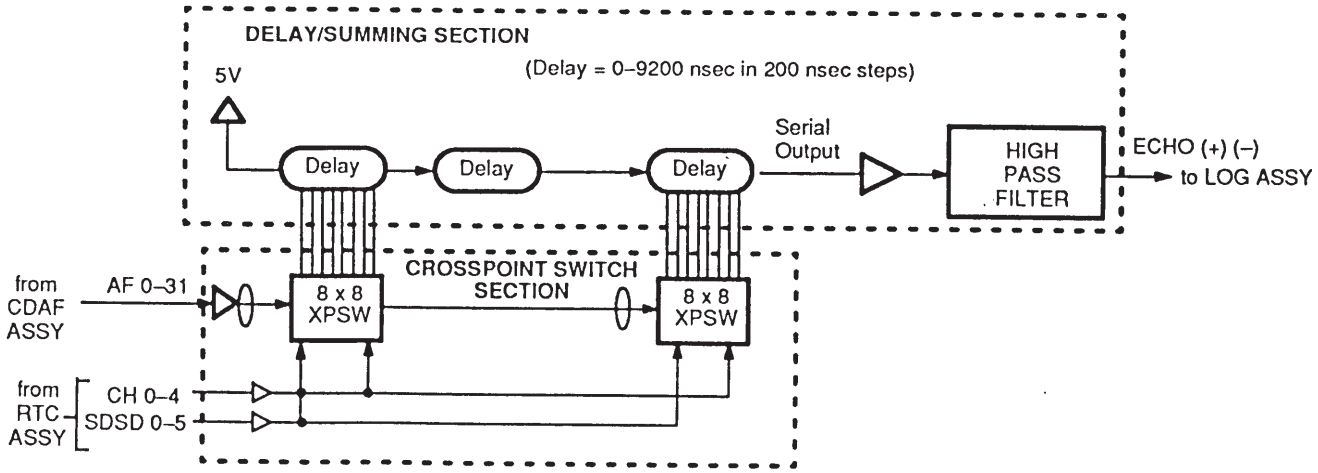

CROSS POINT SWITCH (XPSW) ASSY BLOCK DIAGRAM
ILLUSTRATION 5–9

5–4–6 Logarithmic Amplifier (LOG) Assy

Function . This PC Board Log compresses, detects (rectifies), and performs other signal pro cessing on the echo signal from the XPSW Assy.

Controlled By : RTC Assy.

Inputs Come From : XPSW Assy, RTC Assy.

Outputs Sent To : CVDO Assy, RSC Assy.

Functional Description

Referring to Illustration 5—10, the LOG Assy Block Diagram, the Log Assy can be divided into two functional blocks:

a. Image Function Generator Section;

b. Test Signal Section.

5–4–6 Logarithmic Amplifier (LOG) Assy (continued)

1. Image Function Generator Section: The incoming echo signal is:

    a. Dynamically filtered to compensate for any shifts in center frequency;
    b. Sidelobe canselled to minimize image artifacts;
    c. Log compressed to equalize weak far field and strong near field echoes;
    d. Detected, or rectified;
    e. Assigned a dynamic range;
    f. Processed by a brightness compensatorto boost relatively weak far field echoes. SGC, or Side Gain Control signal controls gain on either side of the image. TGC, or Time Gain Compensation signal, increases echo gain as a function of depth;
    g. Voltage limited to make it compatible with subsequent stages;
    h. Anti—alias filtered to enhance the image.

2. Test Signal Section: This section can generate a 10 mV or 100 mV test echo signal, as well as apply power from the HV Assy for self diagnostic power voltage checks.

5–4–6 Logarithmic Amplifier (LOG) Assy (continued)

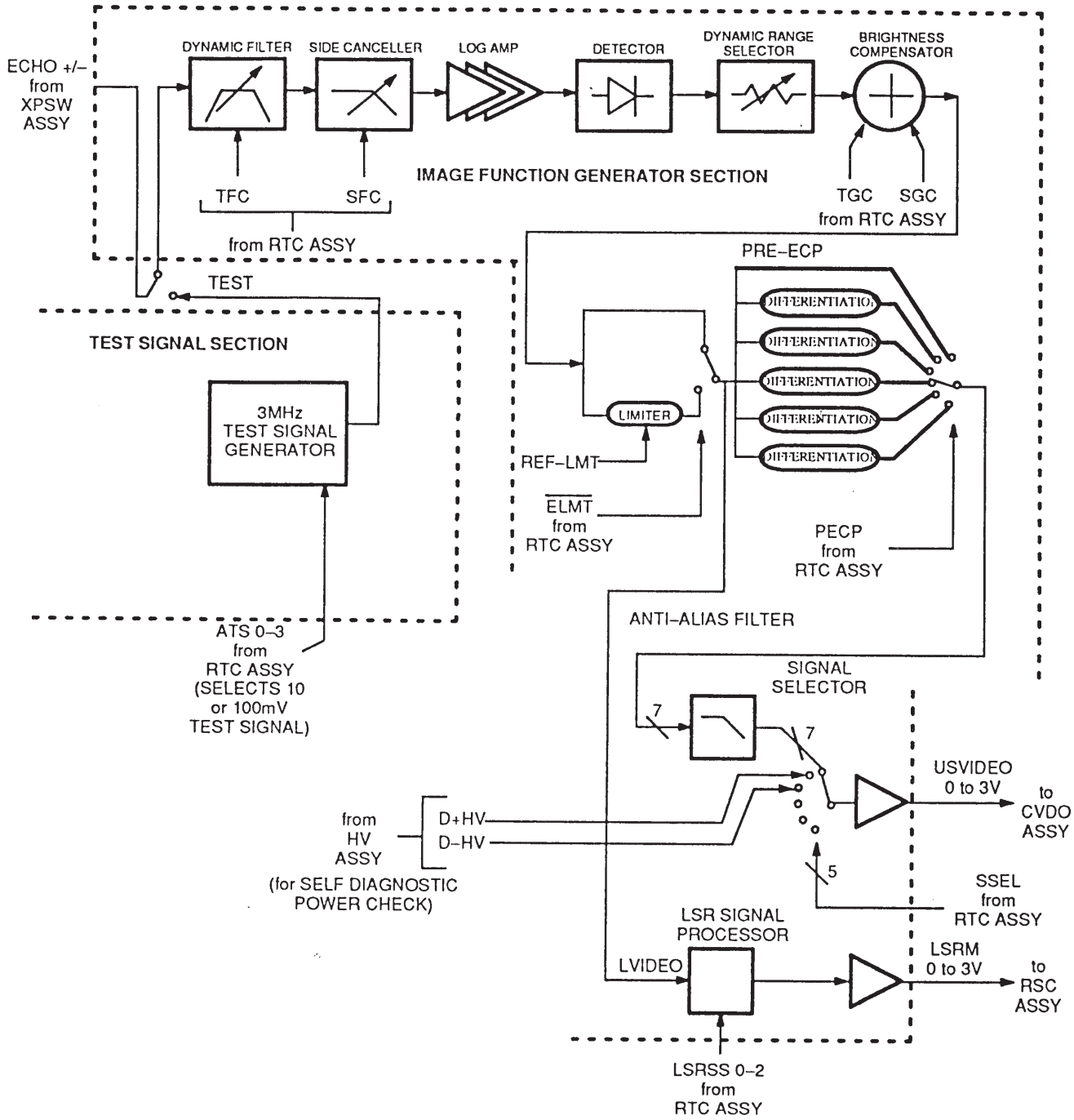

LOGARITHMIC AMPLIFIER (LOG) BLOCK DIAGRAM
ILLUSTRATION 5–10

5−4−7 Color Scan Converter Controller (CSCC) Assy (A17)

Function : Using frame memory RAMs, this card converts digitized echo data to pixels that form a B—mode sector representing the final video image. The CSCC Assy pro cesses B—mode echo signals only. M—mode and doppler mode signals are pro cessed by the FM3 Assy.

Controlled By : MST, IOP and CVDO assemblies.

Inputs Come From : CVDO, MST and IOP assemblies.

Outputs Sent To : CVDO, MST and CBFM assemblies

Functional Description

The CSCC receives a 6−bitdigitized grayscale echo data word from the CVDO Assy. The scan converted output of the CSCC Assy is returned to the CVDO Assy for digital to analog conversion and summing with whitescale physiological and/or software displays. Referring to Illustration 5—11, the Color Scan Converter Controller Assy Block Diagram, this PC Board can be divided into seven functional blocks:

a. B—Mode Line Buffer section;
b. B—Mode Line Buffer Address Generator section;
c. Frame Averaging RAM section;
d. Frame Memory section;
e. Frame Memory Write Address Generator section;
f. Frame Memory Read Address Generator section;
g. Frame Memory Write Enable & Control section;
h. USC Register; CPU Register Control section.

5–4–7 Color Scan Converter Controller (CSCC) Assy (A17) (continued)

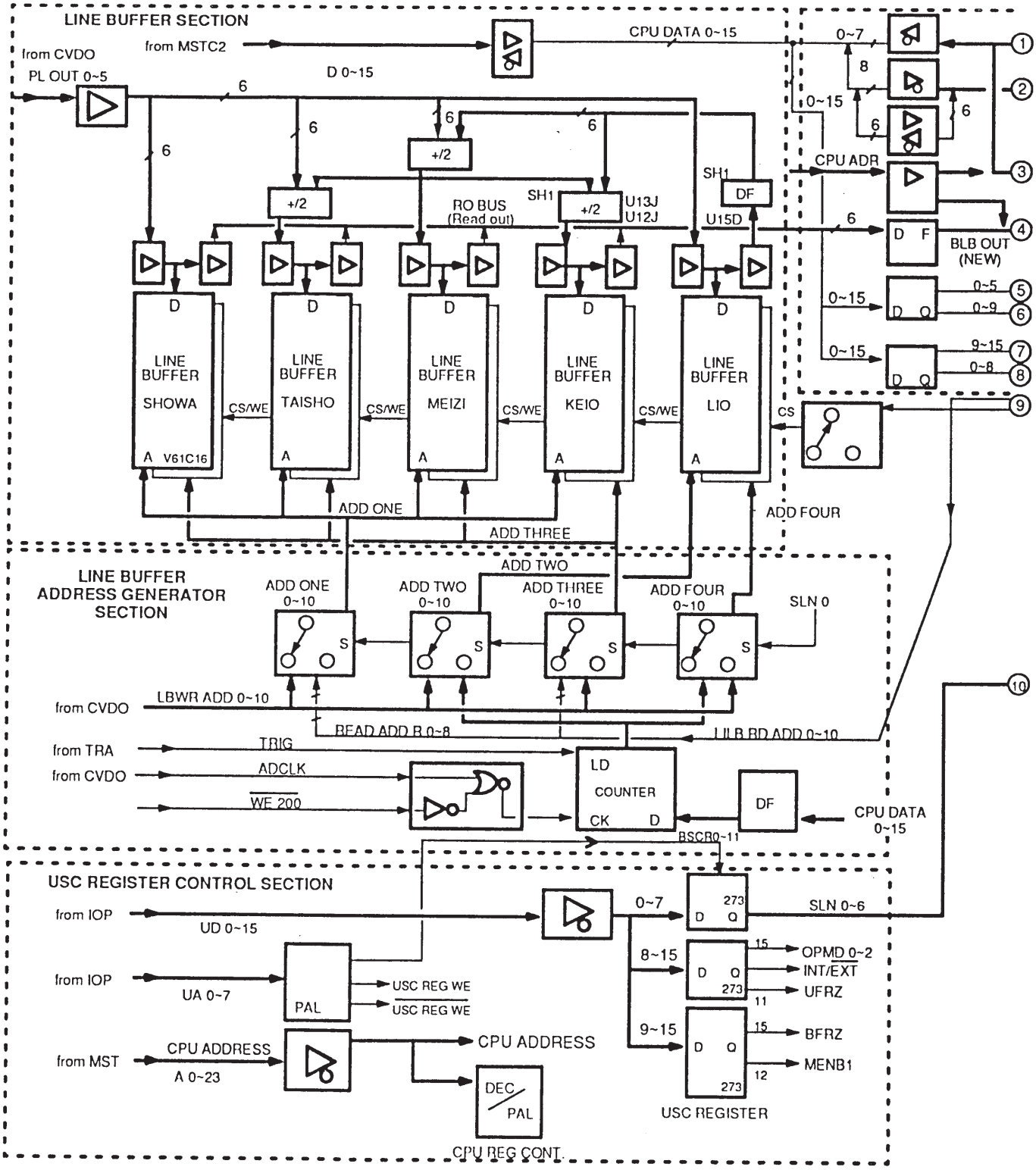

CSCC ASSY BLOCK DIAGRAM
ILLUSTRATION 5–11(a)

5–4–7 Color Scan Converter Controller (CSCC) Assy (A17) (continued)

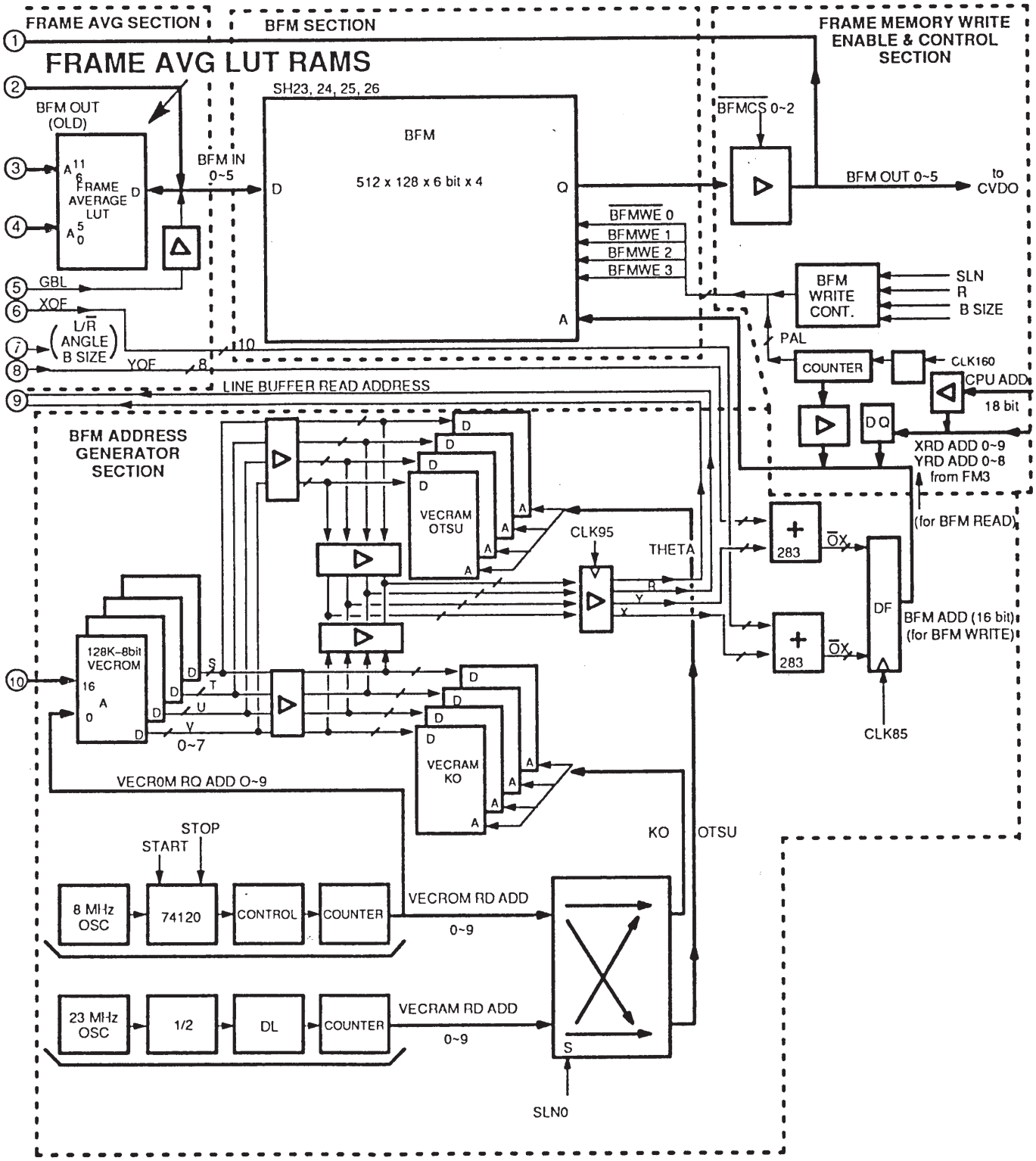

CSCC ASSY BLOCK DIAGRAM (continued)
ILLUSTRATION 5–11(b)

5–4–7 Color Scan Converter Controller (CSCC) Assy (A17) (continued)

B—Mode Line Buffer Section
This buffer linearly interpolates echo data to fill in the missing pixels in the lower, wider portion of the pie shaped B— mode sector image.

B Line Buffer Address Generator Section
Write addresses are supplied by the LBWRADD bus from the CVDO Assy. For the SHOWA, TAISHO, MEIZI and KEIO line buffers, read addresses come from the R bus, which is generated by the VECROM (Vector ROM).

Frame Averaging RAMs
RAM ICs U 1B and U2B contain a frame averaging lookup table, or LUT. To produce an averaged echo word, it averages Six bits of new data (BLB OUT from the line buffers) with Six bits of old data (BFM OUT) stored in frame memory.

1. Strong echoes above a selectable voltage threshold are not averaged. Thus, frame averaging lowers the noise level by averaging normal signal levels without affecting strong echoes.

2. The echo signal voltage threshold is defined by the CPU ADR bus from the MST Assy. The averaged data in the addressed lookup table is sent to the Frame Memory over the Six bit BFM IN bus.

B—Mode Frame Memory (BFM) Section
This section contains 512 bit x 128 bit x 6 bit RAMs. These RAMs store the echo data as pixels for the final video output. The RAMs receive BFM IN, the frame averaged, six bit grayscale B—mode echo word that defines one pixel: it must be assigned to a particular x—y—z frame memory address in six planes of memory.

1. The 512 bit RAM dimension corresponds to theY axis on the TV monitor. The 128 bit dimension corresponds to the X axis. The 6 bit deep RAM planes correspond to the Z (pixel intensity) axis, which is automatically defined by the x—y axis address. The binary value of the BFM IN word defines one of 64 shades of grayscale.

2. Each of the six BFM IN bus bits is sent to its assigned RAM plane at the same relative x—y matrix location. Thus, one grayscale pixel is formed when the data is written out serially and D/A converted to a pixel in the CVDO Assy.

B—Mode Frame Memory Write Address Generator SectIon
This section supplies x and y axis write addresses to the frame memory RAMs. The data transfer rate is 85 nsec. The write addresses are stored as lookup tables in the Vector ROMs (VECROMs) shown in block diagram Illustration 5—11. VECROM lookup tables are updated once per scanline by addresses on the Scanline (SLN) bus.

Frame Memory Write Control Circuit
The B—Mode Frame Memory Write Enable (BFMWE) signal is controlled by several signals decoded by BFM write control. Condition signals 1,2, 2C, 3 and 3C must be high to enable writing. These signals monitor the status of the SLN bus, R bus, and other important system operation indicators. BFRZ, SYSFRZ, and OVR/MINUS high signals disable writing. (BFRZ and SYSFRZ signals freeze the image. OVR/MINUS high signal indicates an overflow in the X axis write address.) SYSRST/ low presets a type D flip—flop to enable BFMWE output.

5–4–7 Color Scan Converter Controller (CSCC) Assy (A1 7) (continued)

Frame Memory Read Addressing

Normally, the XRDADD bus supplies the X axis read address; the YRDADD bus supplies the Y axis read address. However, a 18 bit x—y axis read address from the MST CPU can be enabled for test purposes when CPU RD/WR/ signal is low.

USC Register; CPU Register Control Section

The bits 0—6 of the UD (Ultrasound Data) bus are latched through D—register U24L, U26K to produce the SLN (Scan– line) bus by UA signal and SLNWE signal. (This is derived from the output of PALs U25L, which is addressed by the Ultrasound Address (UA) bus.) Ultrasound Freeze (UFR) is latched out of register U27K. It is ORed with VFRZ from the CPU DATA bus to produce SYSFRZ when either is true. SYSFRZ freezes the image.

Color B—Mode Frame Memory (CBFM) Sub Assy (A17)

Function : This PC Board contains RAMs for scan converting digitized velocity data and tur bulence data for color B—Mode data. It also contains the line buffers required for velocity and turbulence data storage and out.

Controlled By : CSCC assembly.

Input Come From : CSCC assembly.

Output Sent To : CSCC assembly.

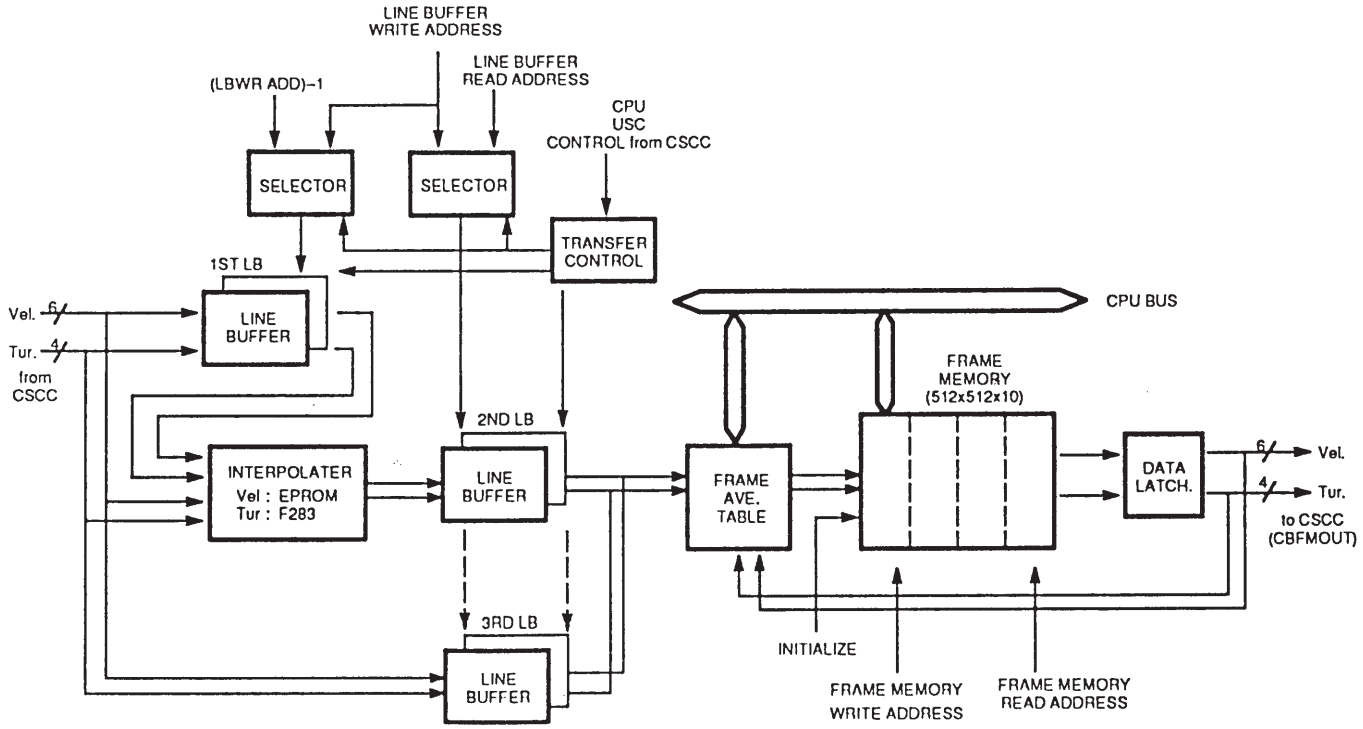

CBFM ASSY BLOCK DIAGRAM
ILLUSTRATION 5–12

5–4–8 Frame Memory 3 (FM3) Assy

Function : This PC Board contains RAMS for storing digitized echo data in the M—Mode and doppler format. It also contains the line buffers and address generators required forM—Mode and doppler data storage and output. This board also processes the color M—Mode and color dopplerwith inputs from the CFMP1 and CFMP2 Boards.

Controlled By : MST and IOP Assemblies.

Inputs Come From : CVDO, MST and IOP Assemblies.

Outputs Sent To : CVDO Assy.

Functional Description:

Referring to Illustration 5—13, the Frame Memory 3 Assy Block Diagram, this PC Board can be divided into five functional blocks:

a. Peak Hold section;
b. Line Buffer section;
c. Line Buffer Address Generator section;
d. Frame Memory section;
e. FM Address Generator section.

1. Peak Hold Section: This section compares signal amplitude of the latest and previous digitized M—Mode doppler data words, and stores the peak sample. This prevents blurring of a fast moving object such as a heart valve during dual channel M—Mode or doppler operation.

2. Line Buffer Section: This section has two sets of line buffers for echo data, which is digitized by an ND converter on the CVDO Assy and sent over on the PL OUT bus. Doppler data, which comes from the FFT Assy, is app!ied directly to the frame memory.

3. Line Buffer Address Generator Section: This section generates the read and write addresses for the Line Buffer section, synching their output to its internal 25 MHz clock.

4. Frame Memory Section: This section receives and stores M—Mode data and Doppler data from the optional FFT Assy. The 64 K x 6 bit MFM RAM is divided into two channels. One channel loads data while the other channel sends data to the CVDO card, and vice—versa.

5. FM Address Generator Section: in conjunction with the MST CPU, this section generates the MFM read and write addresses. It is controlled by the MST Assy and the M—Mode Line Buffer Address Generator section.

5—4—8 Frame Memory 3 (FM3) Assy (continued)

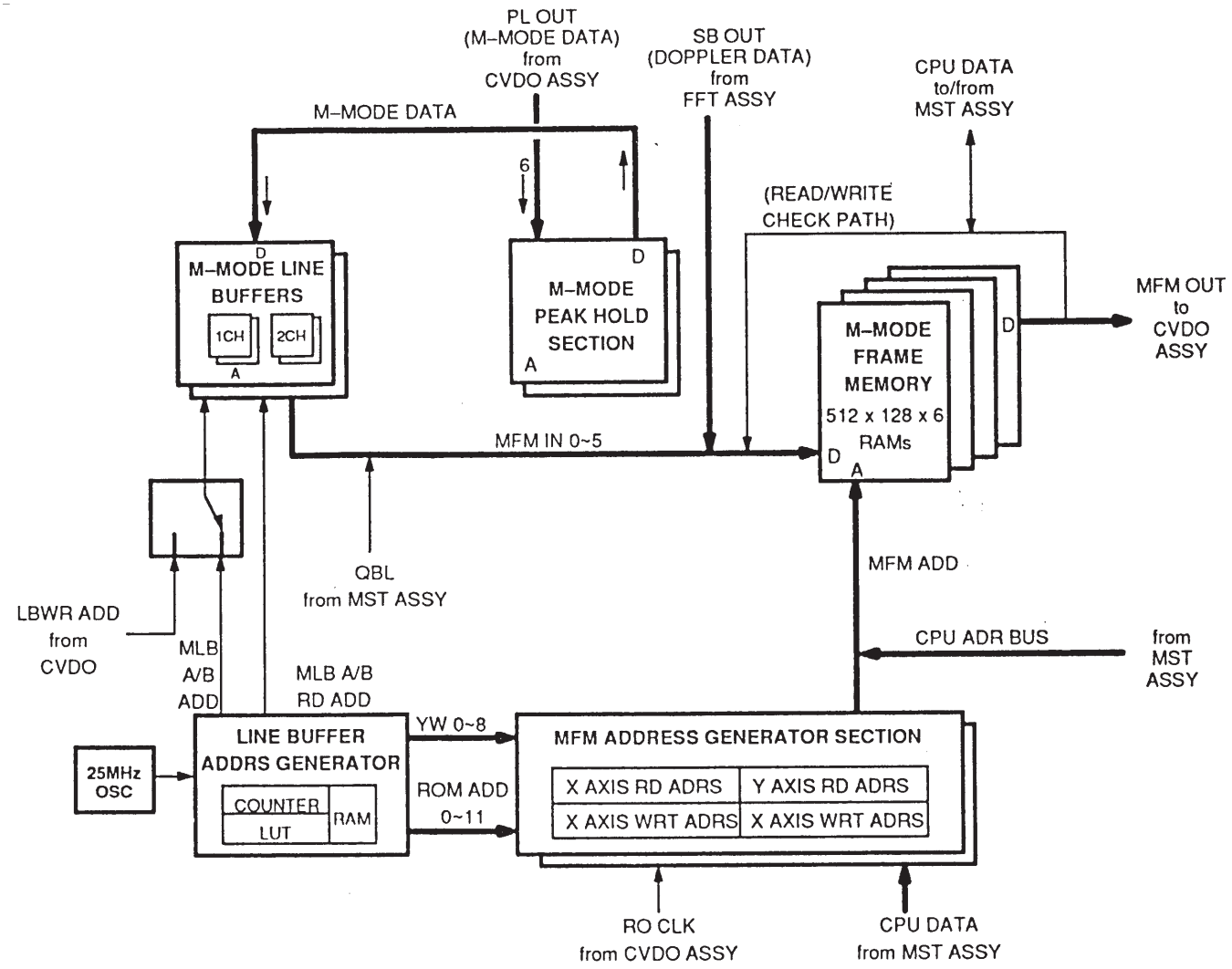

FRAME MEMORY 3 (FM3) BLOCK DIAGRAM
ILLUSTRATION 5–13

5–4–9 Color Video (CVDO) Assy

Function : This PC Board generates the TV signal for the monitor CRT. It also converts analog echo signals to digital, then sends them to the Color Scan ConverterController during B—Mode imaging. During M—Mode imaging, the CVDO Assy sends digi tized echo signals to the Frame Memory.

Controlled By :MST and IOP Assemblies.

Inputs Come From :Log, TGC, MST, CFMP2, and IOP Assemblies.

Outputs Sent To :CSCC, FM3, MST, MFC Assemblies; 12” Monitor, optional VCR, optional SCR, op tional Polaroid Camera.

5–4–9 Color Video (CVDO) Assy (continued)

Functional Description

Referring to Illustration 5—14, the CVDO Block Diagram, the CVDO Board can be divided into six functional blocks:

a. Ultrasound Video A/D Converter section;
b. A/D Clock Generator section;
c. Display Signal Generator section;
d. TV Sync Generator section;
e. Line Buffer Write Address Generator section;
f. TGC Line Buffer section.

1. Ultrasound Video ND Converter Section: This section A/D converts the ultrasound signal, then sends it to the Color Scan Converter Controller (CSCC) and Frame Memory 3 (FM3). The Color Scan Converter Controller formats and stores B—Mode ultrasound images; the Frame Memory formats and stores M—Mode and optional Doppler mode ultrasound images.

2. A/D Clock Generator Section: This section generates the clock signal for Ultrasound (US) Echo and TGC analog to digital conversion. (TGC data is sent over the ACP bus from the IOP Assy via the RTC Assy).

3. Display Signal Generator Section: This section receives digital, pixel formatted ultrasound data from the Color Scan Converter Controller and/or Frame Memory. It adds image correction by means of the Post LUT (Look Up Table) RAM. The DAC converts each 6 bit FM word to an analog voltage representing a grayscale pixel, and applies TV Sync Generator clocks. Then it adds any available white scale or blackscale overlays from the WD2 or MST Assemblies. Finally, it sends the resulting Video signal to the 12” Monitor, optional VCR and/or SCR, the MFC card, etc.

4. TV Sync Generator Section: This section generates TV sync signals (CSYNC, GVSYNC), horizontal and vertical drive signals (HD, VD), and the horizontal retrace blanking (CBL) signal. The HD clock controls the DSC readout clock (R.O.CLK). The HD and VD clocks provide timing control for CSCC and FM3 Assy scan conversion.

5. Line Buffer Address Generator Section: This section generates line buffer write addresses for the B—Mode line buffers on the CSCC Assy. It is controlled by the MST Assy via the CPU Address bus.

6. TGC Line Buffer Section: This section converts the Time Gain Compensation (TGC) signal to digital and stores it in the TGC line buffer for display on the monitor as the TGC profile, vhen selected by keyboard command. This profile shows the amount of TGC gain applied at all body depths being imaged.

This page is left blank intentionally.

5–4–9 Color Video (CVDO) Assy (continued)

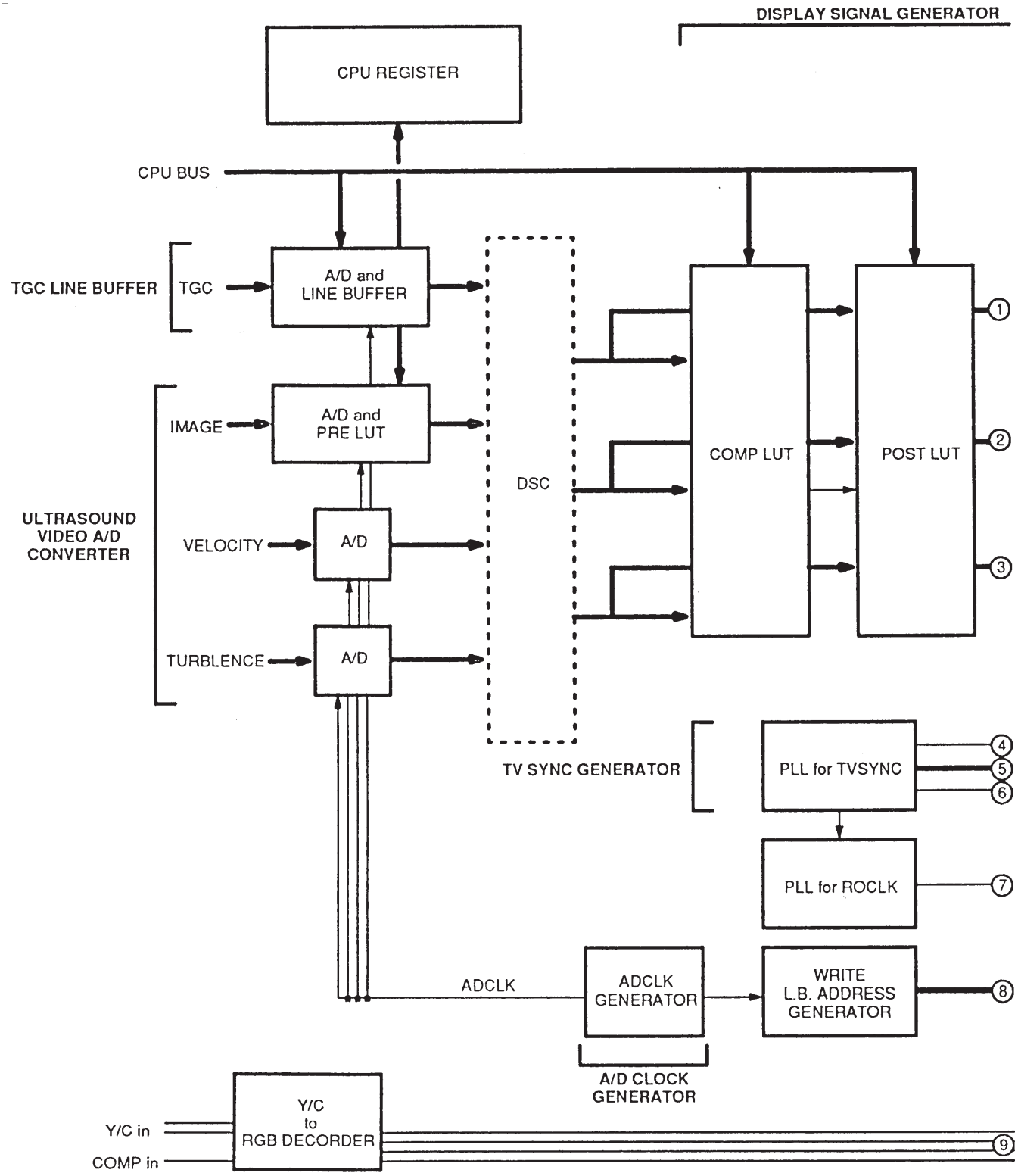

CVDO ASSY BLOCK DIAGRAM
ILLUSTRATION 5–14(a)

5–4–9 Color Video (CVDO) Assy (continued)

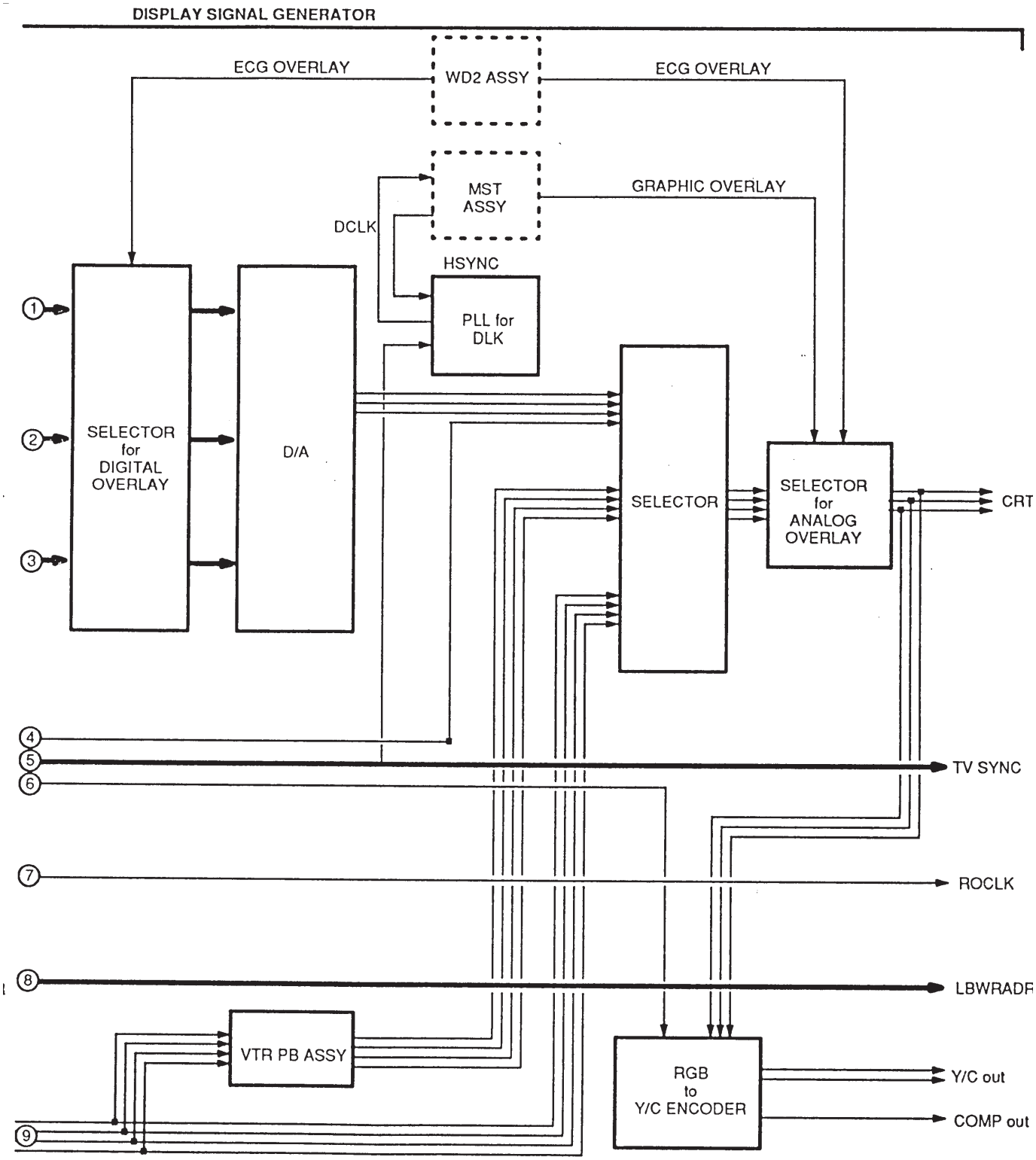

CVDO ASSY BLOCK DIAGRAM
ILLUSTRATION 5–14(b)

5–4–10 Master Controller (MST) Assy

Function : This PC Board controls the entire RT 6000/RT 6800 System, as well as its resident Graphic Display Controller and memory. It prioritizes system interrupts and re– sponds to them. It also downloads software required by the digital signal proces sor on the IOP Assy for ultrasound mode control. In response to front panel key board commands, its Graphics Display Controller IC generates whitescale over lays that are super— imposed over the ultrasound image.

Controlled By : Operator keyboard and trackball inputs; internal microcode.

Inputs Come From : IOP Assy, CSCC Assy, FM3 Assy, CVDO Assy, RTC Assy

Outputs Sent To : IOP Assy, CSCC Assy, FM3 Assy, CVDO Assy, RTC Assy.

Functional Description

Referring to Illustration 5—15, the MST Block Diagram, the MST Board can be divided into the two sections and stages shown below:

a. System Controller section
   a) Central Processing Unit (CPU) stage
   b) CPU Memory stage
   c) CPU Peripllerial Controller stage
   d) System Clock stage
   e) Interrupt Controller & Interface stage
   f) DTACK, BEER, RESET stage
   g) UA; UD Interface stage
   h) CPU DATA; CPU ADR Interface stage
   i) Programmable Timer
   j) Watchdog LEDs & Test Switches stage
b. Graphics section
   a) Advanced CRT Controller (ACRTC)
   b) Graphics Frame Memory
   c) Video Sync PALS

1. System Controller Section: This section controls the overall RT 6000/RT 6800 System and consists of a Motorola 68000 Microprocessor with 256 K of working RAM, 12 M of program EPROM, and 16 K of scratchpad E^2PROM. It also contains a CPU peripherals controller, interrupt controller, system clock, and the other stages described above.

5–4–10 Master Controller 2 (MSTC2) Assy (Continued)

1) CPU stage: The CPU is a Motorola 68000 Microprocessor as shown on schematic sheet 1. The 68000 CPU is always in one of three processing states: normal, exception, or halted. in normal processing state, the CPU fetches program instructions and operands from memory, executes these instructions, and stores results. The CPU is also in normal processing mode when stopped due to a STOP instruction. The CPU enters the exception mode processing state when:

   a. Externally generated interrupts, bus errors (BERR), or resets (MPURST) occur;

   b. Internally generated trap instructions, tracing, etc. occur.

   The CPU enters halt mode when a catastrophic hardware failure, such as multiple bus errors, occurs. In this case, the CPU assumes the system is unusable and halts. Only an external reset, i.e., pressing the RESET switch on the MST card, can restart a halted CPU. Halt and stop states are not the same, since the CPU can restart from a stop state without an external reset.

2) CPU Memory stage: This stage consists of 256K of working Static RAM, 12 M of program EPROM,and 16K of scratchpad E^2PROM. Schematic sheet 5 shows the SRAM ICs, sheet 6 shows the EPROM ICs, and sheet 7 shows the E^2PROM ICs.

3) CPU Peripheral Controller stage: The CPU address bus is decoded by this stage to produce D—registerclocking signals, chip select signals, or buffer enabling strobes for the CPU peripherals.

4) System Clock stage: This stage produces the 8 MHz CPU clock.

5) Interrupt Controlier & Interface stage: This stage monitors on and off Board interrupts, assigns a priority to these interrupts and sends the priority message to the CPU. The CPU compares the interrupt's priority level to that of its currently running program. It ignores the interrupt if it equals oris less than the program priority level. If the interrupt priority is higher, the CPU starts exception processing, running the appropriate interrupt routine. Then the CPU returns to its normal program routine.

6) DTACK, BERR, RESET stage: Descriptions of the processing circuitry for each signal follow: DTACK signal tells the CPU a data transfer has occurred. A bus error forces the CPU to run a bus error handler routine, or rerun the bus cycle just executed.

7) UA; UD Intertace stage: This circuitry adds CPU—generated data and addresses to the UD and UA buses sent from the IOP Assy. The USC bus' UA and UD bus lines direct send/receive focus data and numerous control signal data to the RTC Assy for further processing. The CPU data and address bus data are strobed onto the USC bus lines.

8) CPU DATA; CPU ADR Intertace stage: This stage permits the CPU to write data to the RT6000/RT6800via its CPU address and data buses, or read data sent from the RT 6000/RT 6800 via the CPU data bus only.

9) Programmable Timer (PTM) Stage: This stage provides timing intervals upon CPU command. These timing intervals are programmed into the timer from data supplied over the CPU data bus.

10) Calendar stage: A real time clock IC sends day, month and year to the CRT via the CPU and graphics controller at power up. The clock memory is kept nonvoiatiie by a lithium battery.

11) Watchdog LEDs & Test Switches stage: Edge mounted DIP switches 5W1 and 5W2 can be set to perform read—after—write operations on the MST memory elements. LED (Light Emitting Diodes) provide diagnostics test status indications. Signals from the on Board device controller stage enable the buffers.

5–4–10 Master Controller (MST) Assy (continued)

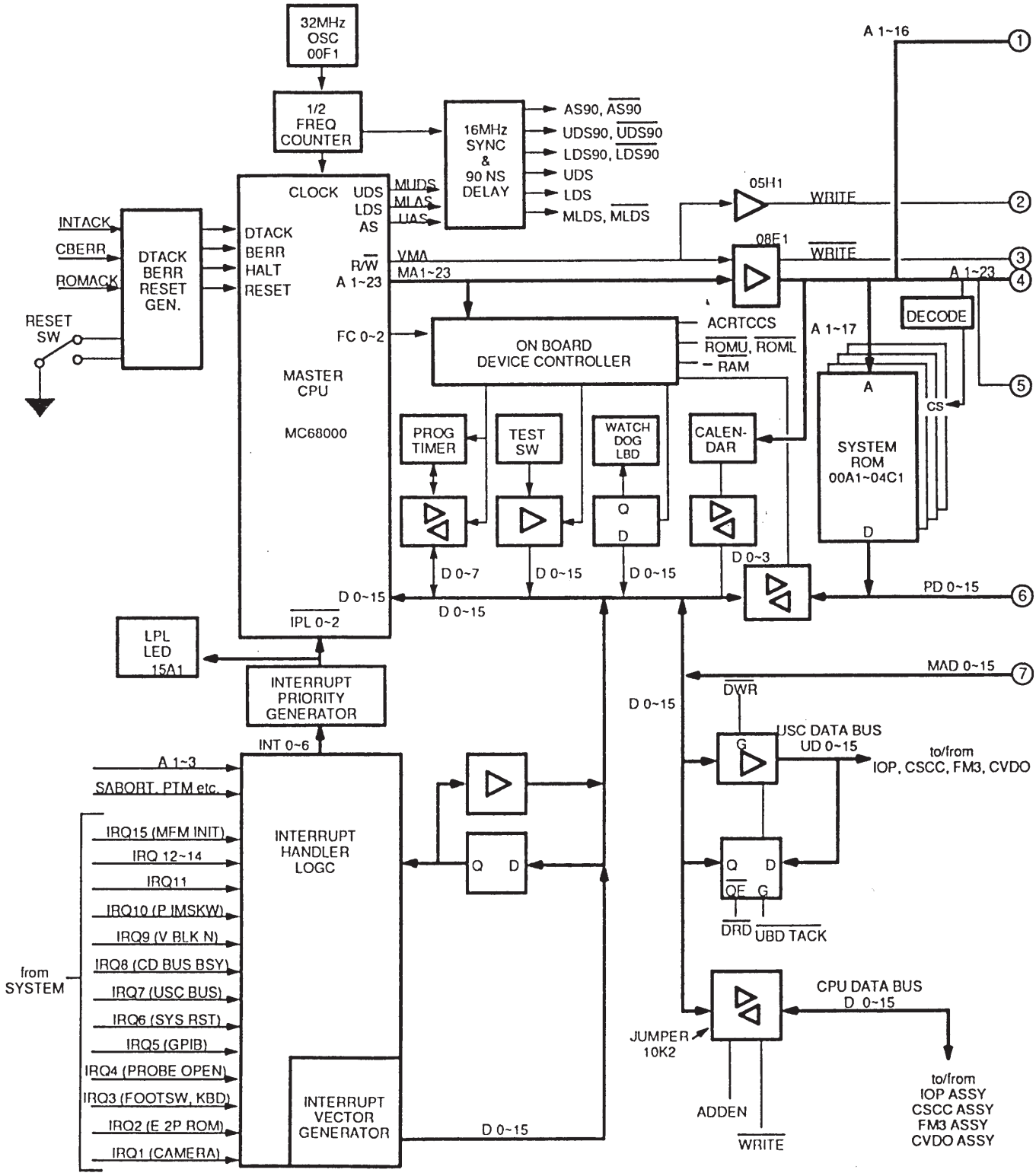

MASTER CONTROLLER (MST) ASSY BLOCK DIAGRAM
ILLUSTRATION 5–15(a)

5–4–10 Master Controller (MST) Assy (continued)

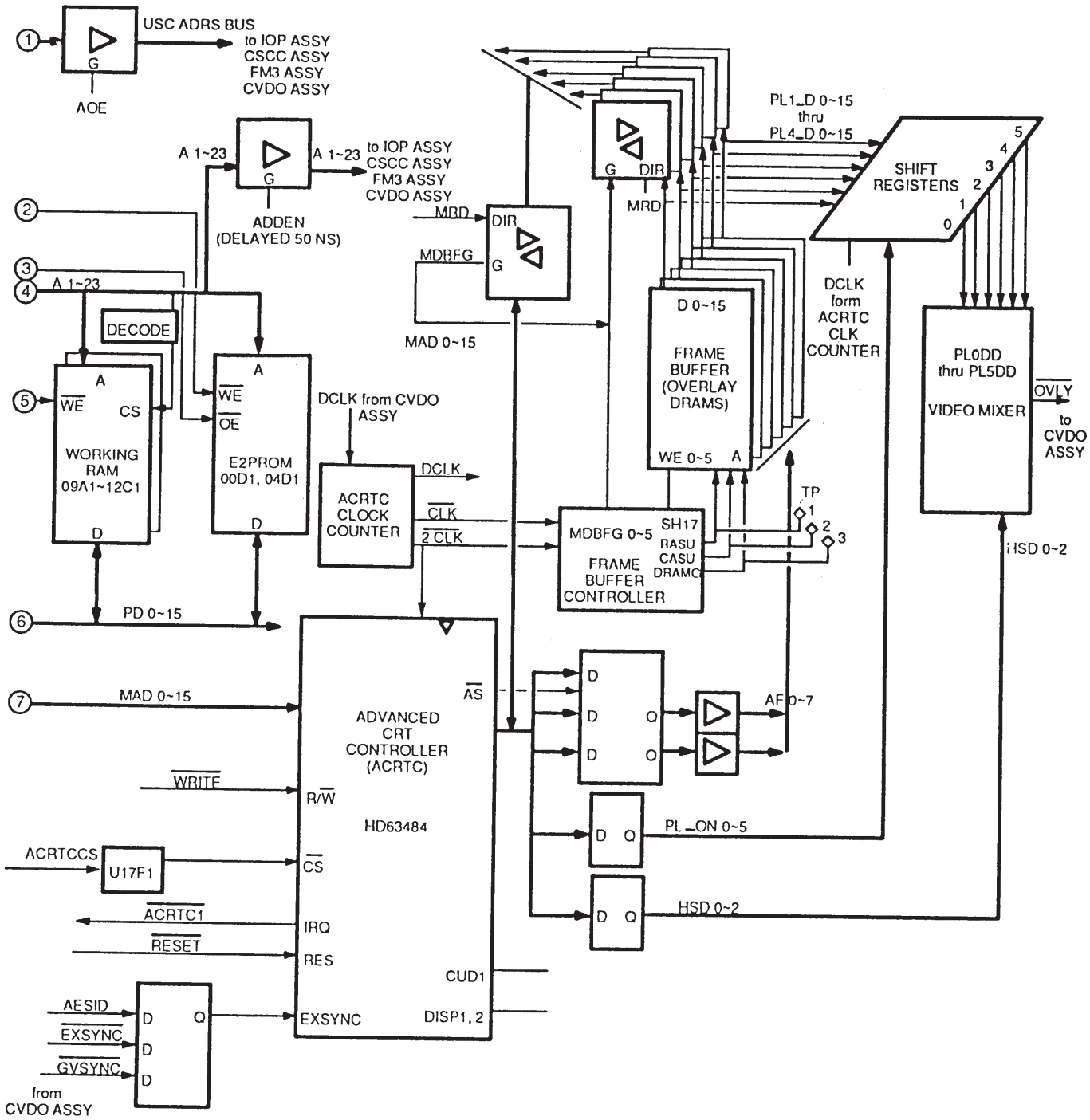

MASTER CONTROLLER (MST) ASSY BLOCK DIAGRAM
ILLUSTRATION 5–15(b)

5–4–10 Master Controller (MST) Assy (continued)

2. Graphics section

1) Advanced CRT Controller (ACRTC): The ACRTC is an HD63484 IC. This 4096 x 4096 high resolution CRT Controller Uses bit mapping technology in character only, graphic only, or multiplexed character/graphic mode.

2) Graphics Frame Memory: The CPU microcode issues display commands to the ACRTC in response to operator keyboard commands over the CPU Data bus. In response, the ACRTC addresses one of six, 1 MByte planes of RAM frame memoryoverthe AF bus. Thus, a 512 K (maximum) whitescale character and/or graphics overlay is output from frame memory. The selected overlay is converted from parallel to serial by a bank of shift registers.

3) Video Sync PALS: A PAL IC video syncs the active graphics plane using Horizontal Sync (HSYNC) and Vertical Sync (VSYNC) signals from the CVDO Assy. The serialized graphics outptit is sent to the CVDO Assy as OVLY/signal. There, it is summed with the grayscale video and sent to the CRT and optional VCR.

5–4–11 Input/Output Processor (IOP) Assy

Function : In conjunction with the MST Assy, this PC Board sends controls data and address words to the Real Time Controller, which controls ultrasound beam steering and focusing. it also interfaces the following items to the MST Assy: VTR, Keyboard and Trackball, Transducer, Strip Chart Recorder, High Voltage (HV) Power Sup ply, Camera, GPIB IEEE—488 interface, MFC, Programmable Timer.

Controlled By : MST Assy.

Inputs Come From : Real Time Controller Assy, I/O Connector Assy, MST Assy.

Outputs Sent To : RTC Assy, I/O Connector Assy, MST Assy.

Functional Description

Referring to Illustration 5—16, the I/O Processor Block Diagram, this PC Board can be divided into ten functional blocks:

a. Ultrasound Controller section;
b. Keyboard/Trackball Interface section;
c. VTR Interface section;
d. Transducer Interface section;
e. Strip Chart Recorder section;
f. High Voltage Power Supply Interface Section;
g. Camera Interface section;
h. GPIB IEEE–488 Interface section;
i. Multiformat Camera Interface section;
j. Programmable Timer section.

5−4−11 Input/Output Processor (IOP) Assy (Continued)

1. Ultrasound Controller Section: This section contains a 32010 Display Signal Processor and 8 KBytes of RAM to control the beam steering (vector) and continuous dynamic focusing functions of the Real Time ControllerAssy.

2. Keyboard/Trackball interface Section: This section receives key matrix and track ball datafromthe keyboard and sends it to the MST Assy via the USC bus.

3. VTR Interface Section: This section controls VTR operation via the keyboard VTR commands, receives video tape counter pulses, and sends this data to the MST Assy via the USC bus.

4. Transducer Interface Section: This section receives Probe Type (PTYPE) data and Probe Select data and sends it to the MST Assy via the USC bus.

5. Strip Chart Recorder Section: This section controls operation and speed of the Strip Chart Recorder.

6. High Voltage Power Supply interface Section: This section controls the High Voltage Power Supply, and is in turn controlled by the MST Assy.

7. Camera Interface Section: This section controls the shutter speed of the optional Polaroid camera.

8. GPIB IEEE—488 Interface Section: This section formats data for transmission over an IEEE−88 Interface.

9. Muitiformat Camera Interface Section: This section controls the optional multiformat camera.

10. Programmable Timer Section: This section contains a programmable timer that develops a periodic interrupt signal, the Polaroid camera shutter speed control, and timing for the M/D ultrasound mode.

5–4–11 Input/Output Processor (IOP) Assy (continued)

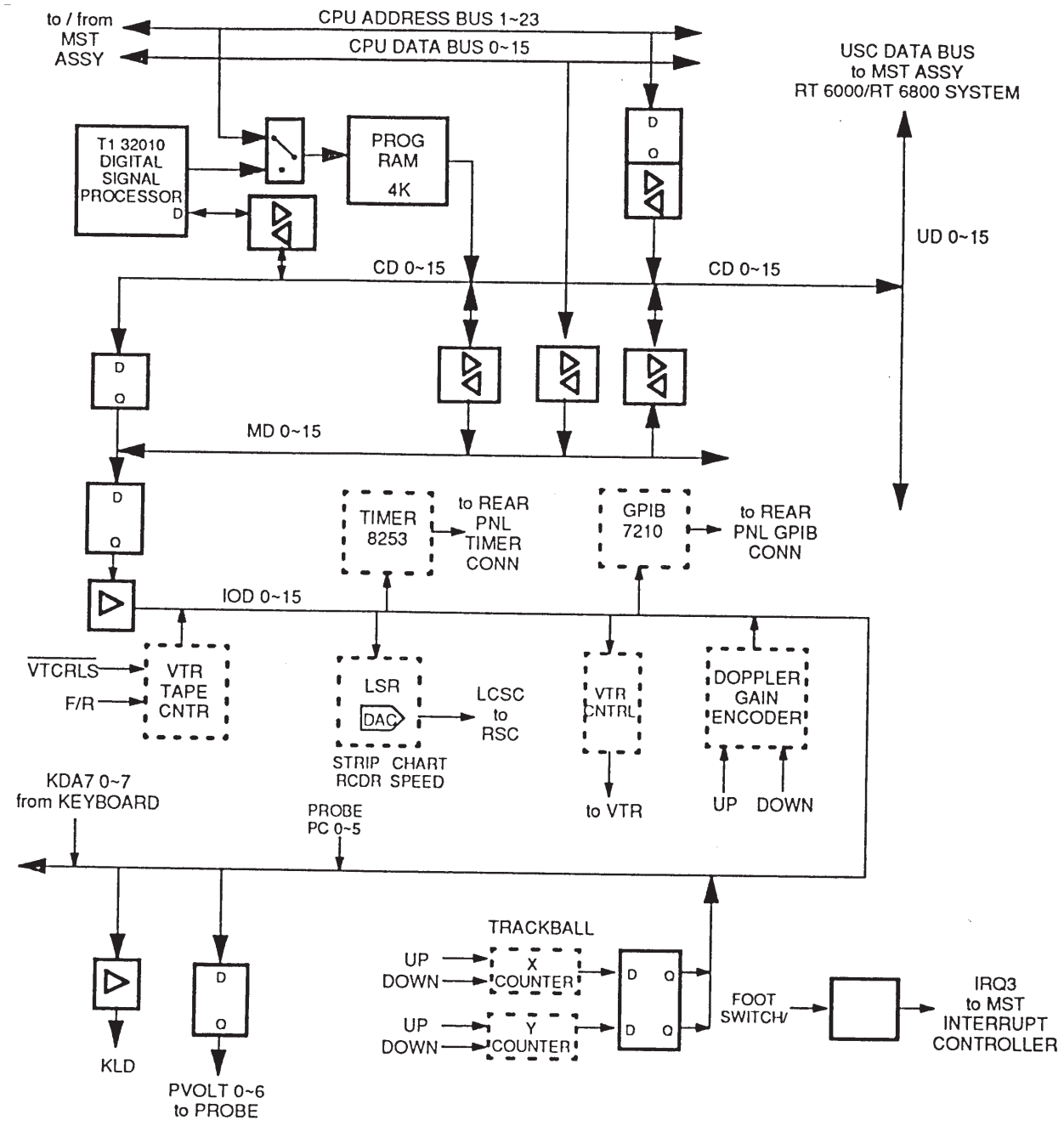

IOP ASSY BLOCK DIAGRAM
ILLUSTRATION 5–16

5–4–12 Input/Output Connector (I/O CONN) Assy

Function : Signal I/O Board. See Functional Description paragraph below.

Controlled By : Not applicable.

Inputs Come From : See Functional Description paragraph below.

Outputs Sent To : IOP Assy via Motherboard.

Functional Description

Referring to Illustration 5—17, the I/O Connector Block Diagram, this PC Board contains no active components. It simply connects the following front panel and external equipment to the IOP Assy via the motherboard:

a. Keyboard/Trackball;
b. Optional Strip Chart Recorder (5CR or LSR);
c. Footswitch;
d. Optional Polaroid Camera;
e. Optional Multiformat Camera;
f. GPIB IEEE488 Interface Connector;
g. High Voltage (HV) Assy;
h. Video Cassette Recorder (VCR or VTR).

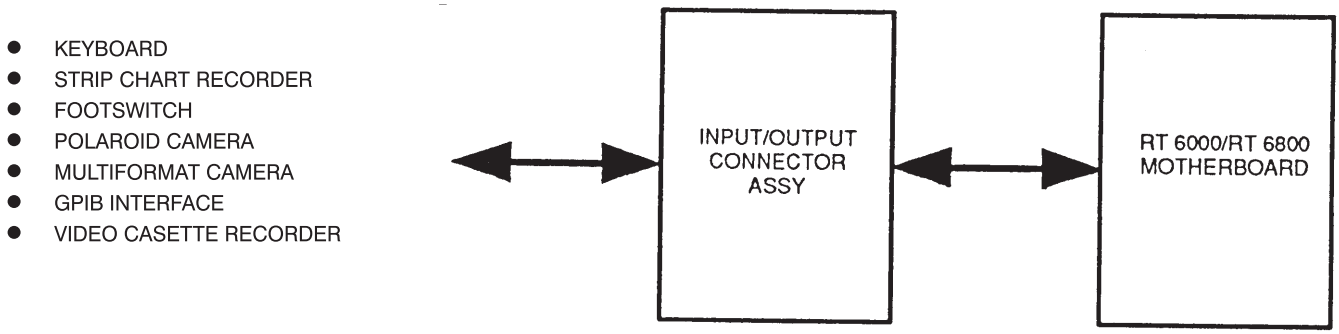

I/O CONNECTOR ASSY BLOCK DIAGRAM
ILLUSTRATION 5–17

5−4−13 Real Time Controller (RTC)

Function : This PC Board decodes or buffers MSTAssy—controlled USC data and address buses from the IOP assembly to produce control buses for the entire system.

Controlled By :MST Assy, IOP Assy.

Inputs Come From :MST Assy, IOP Assy, TRA Assy

Outputs Sent To :TRA Assy, PDS Assy CDAF Assy, LOG Assy, Audio Assy, Color Doppler Assy, FFT Assy, PSSA2 Assy, Keyboard

Functional Description

Referring to Illustration 5—18, the RTC Block Diagram, this PC Board can be divided into six functional blocks:

a. Input Buffer Support section;
b. Send/Receive Focus Data Output section;
c. Analog Control Signal Generator section;
d. TGC section;
e. Range Gate Generator section;
f. Local Signal Generator section.

1. Input Buffer Support Section: Output Buffer Section The input Buffer Section routes the IOP Assy's UD data bus to the proper RTC circuit for processing. Several buses requiring no processing are sent directly to an output buffer, then to the analog cards.

2. Send/Receive Focus Data Output Section: This section develops the focus data corresponding to the transducer being used, body depth, etc. The addressed ROMs send the following focus data buses to the system:

   a. TDSD 0−7 −−− Transmit Focus Delay to TRA Assy
   b. PDSD 0−4−−−− Primary Receive Focus Delay to PDS Assy
   c. SDSD 0−5−−−− Secondary Receive Focus Delay to XPSW Assy
   d. PDSD 0−1 −−−− Doppler Receive Focus Delays to Audio Assy
      SDSD 0−5

5–4–13 Real Time Controller (RTC) (Continued)

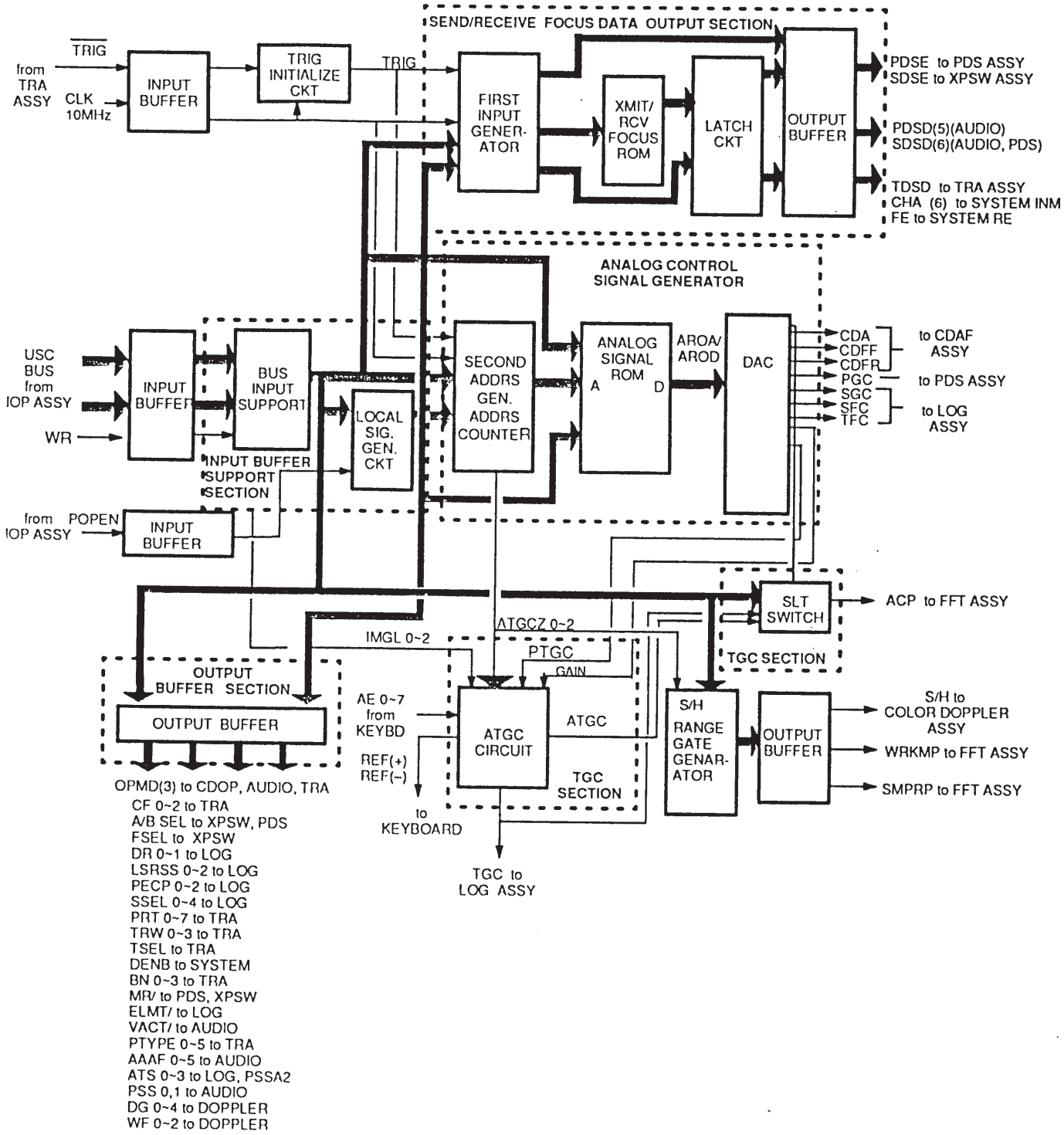

RTC ASSY BLOCK DIAGRAM
ILLUSTRATION 5–18

5–4–13 Real Time Controller (RTC) (continued)

3. Analog Control Signal Generator Section: This section develops analog control signals for the analog echo processing PC Boards. These signals are written out of ROM hookup tables and include:
   a. CDA 0—4 (Continuous Dynamic Aperture); CDFF, CDFR (Continuous Dynamic Focus) signals sent to the CDAF Assy;
   b. PGC, SGC, TGC gain compensation signals sent to the Log Amplifier Assy;
   c. TFC, SFC frequency compensation signals sent to the Log Amplifier Assy.

4. TGC Section: This section;
   a. Produces the Ref +/— reference voltage.
   b. Produces the Time Gain Controh (TGC) signal from GAIN and PTGC signals..
   c. Produces the Adaptive Time Gain (ATGC) signal from the front panel slider pot—generated AEO bus.
   d. Produces the differential Analog Check Port (ACP) signal, which generates TGC signal at the CVDO Assy.

5. S/H Range Gate Generator Section: This section produces the WRKMP and SNPRP range gate signals required for Doppler data sampling at the FFT board. Range gating ensures that only doppler information from the body depth of interest is sampled. S/H (Sample/Hold) is a control signal used by the Color Doppler Board to controh anahog to digitah conversion timing. WRKMP, SNPRP, and S/H signals are produced in response to RGD and RGW bus inputs from the IOP Assy.

6. Local Signal Generator Section: This section produces ROM and PAL— generated internal control signals required by the other RTC card sections. Signals produced inchude the ACN bus, APT bus, N/F (Near Field/Far Field) signal, and SCMD signal.
   a. N/F (Near Field/Far Field) telhs a Primary Receive Delay Focus ROM whether current receive echoes are returning from the near or far fiehd. (N/F high = near field; low = far field).
   b. The APT bus provides aperture delay information to an Aperture Receive Delay Focus ROM7 on this assembly. This ROM produces the TDSD (Transmit Dehay Sum Da!a) bus, which supphies focus delay information to the Transmitter Assy.

5–4–14 Color Doppler (CDOP) Assy (Optional)

Function	: This PC Board creates the in—phase (I) and quadrature (Q) doppler signals, bandpass and baseband filters the signals, selects Continuous Wave Doppler or Pulse Doppler mode, and extracts the Doppler signah when in Pulse Doppler mode.
Controlled By	: Real Time Controller (RTC) Assy.
Inputs Come From	: Continuous Wave (CW) Transducer, RTC Assy.
Outputs Sent To	: Audio Assy.

5–4–14 Color Doppler (CDOP) Assy (Optional) (continued)

Functional Description

Referring to Illustration 5—19, the Color DopplerAssy Block Diagram, this PC Board can be divided into nine functional blocks:

a. Doppler Input Selector;
b. Echo Band Pass Filter;
c. Baseband Echo Filter;
d. CW Pulse Selector;
e. Sampling and Hold circuit;
f. Wall Filter;
g. Display Gain;
h. Peak Detect;
i. Doppler Output Selector.

1. Doppler Input Selector: This stage selects between the phased array probe and the CW Doppler probe.

2. Echo Band Pass Filter: This filter passes 1.5 MHz to 15 MHz Doppler echo frequencies to the next stage.

3. Baseband Echo Filter: This low pass filter extracts the baseband component from the Doppler Echo frequencies.

4. CW Pulse Selector: This selector selects CW Doppler or Pulse Doppler signal for output.

5. Sampling and Hold circuit: During pulse Doppler mode, this circuit extracts the Doppler signal in accordance with the S/H signal generated by the RTC Assy.

6. Wall Filter: This filter eliminates the Doppler component from a motionless or nearly motionless body.

7. Display Gain: This variable gain amplifier amplifies the Doppler signal from 0 — 45 dB by means of the display intensity control on the front panel.

8. Peak Detect: This amplifier senses Doppler signal peaks and activates the peak signal intensity LEDs on the front panel.

9. Doppler Output Selector: This stage enables IDOP in—phase Doppler signal or QDOP quadrature Doppler signal for output to the Audio Assy.

5–4–14 Color Doppler (CDOP) Assy (Optional) (continued)

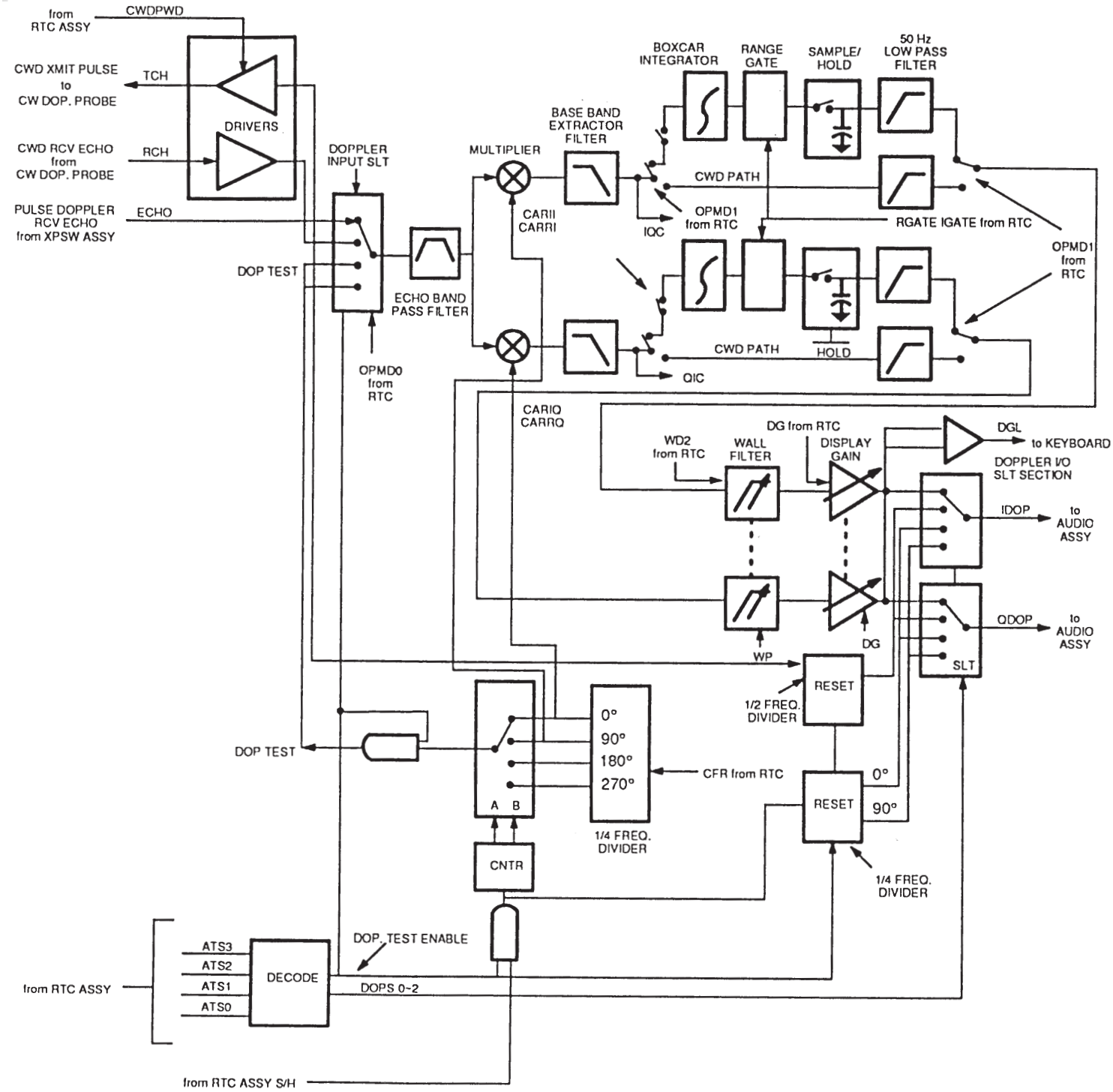

COLOR DOPPLER ASSY BLOCK DIAGRAM
ILLUSTRATION 5–19

5–4–15 Audio Assy

Function	This card receives in—phase and quadrature doppler signal from the Color Dop pler Assy. To make the doppler signal audible, it Nyquist filters and Hilbert con verts the doppler signal, then sends it to the headphones and speakers.
Controlled By	:RTC Assy via the USC bus.
Inputs Come From	:Color Doppler Assy, RTC Assy, keyboard, Rear Panel cards, PCG Microphone, In ternal Micro phone.
Outputs Sent To	:FFT Assy, keyboard, Rear Panel cards.

Functional Description

Referring to Illustration 5—20, the Audio Assy Block Diagram, this PC Board can be divided into three functional blocks:

a. Nyquist Filter;
b. Hilbert Transformer;
c. Audio Output Selector.

1. Nyquist Filter: This triple low pass filter rejects the sampling frequency component in the Doppler I and Q inputs and improves their signal to noise ratios.

2. Hilbert Transformer: This transformer distinguishes between audible arterial and venal blood flow sounds from the I/Q Doppler echo input, and applies them to a front panel mounted audio volume potentiometer.

3. Audio Output Selector: A series of switches controllable from the front panel route the blood flow sounds to external speakers, headphones, internal speakers, or the VTR. The microphone output can be also be routed to speakers or headphones by this circuit.

5–4–15 Audio Assy (continued)

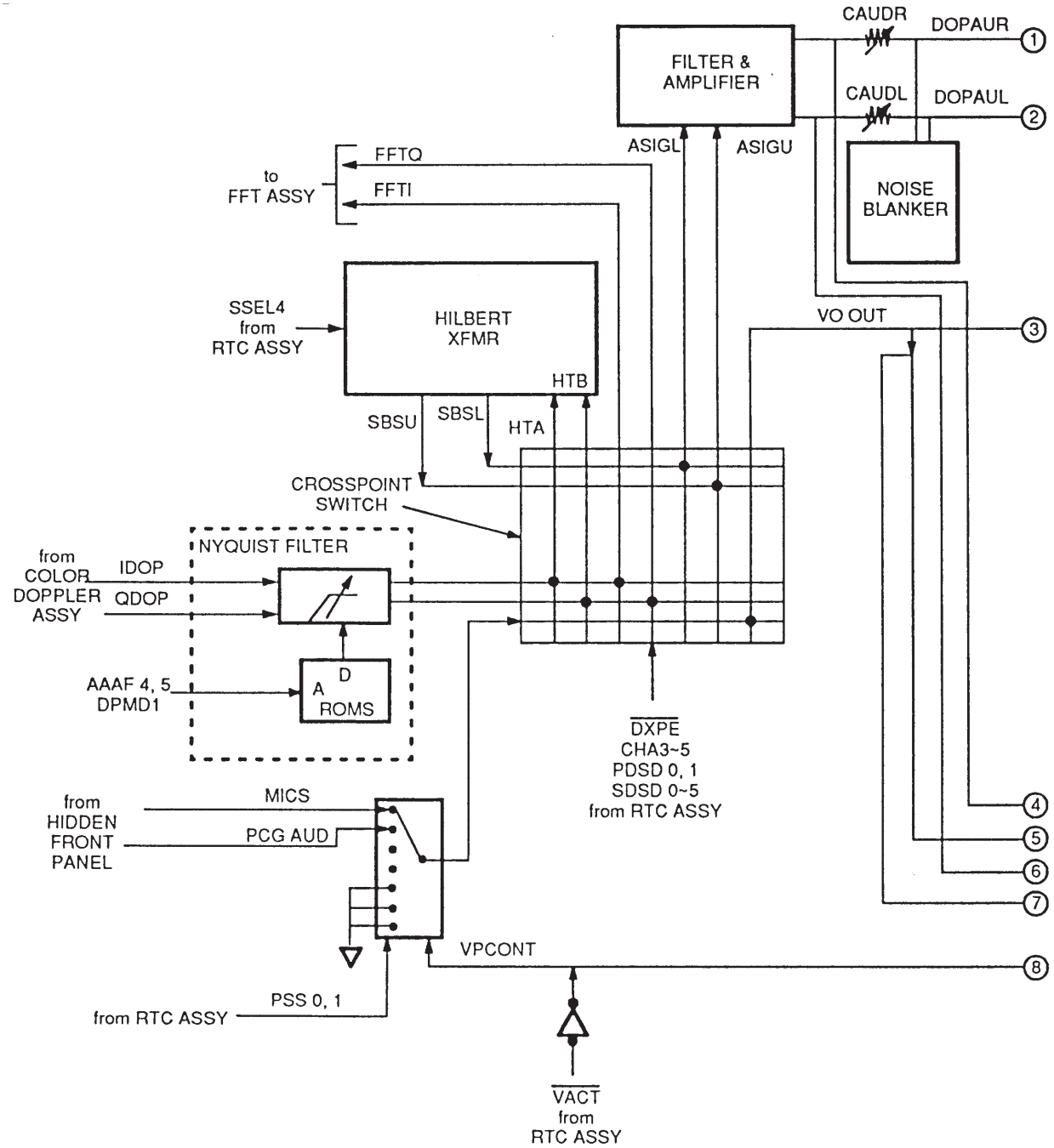

AUDIO ASSY BLOCK DIAGRAM
ILLUSTRATION 5—20(a)

5–4–15 Audio Assy (continued)

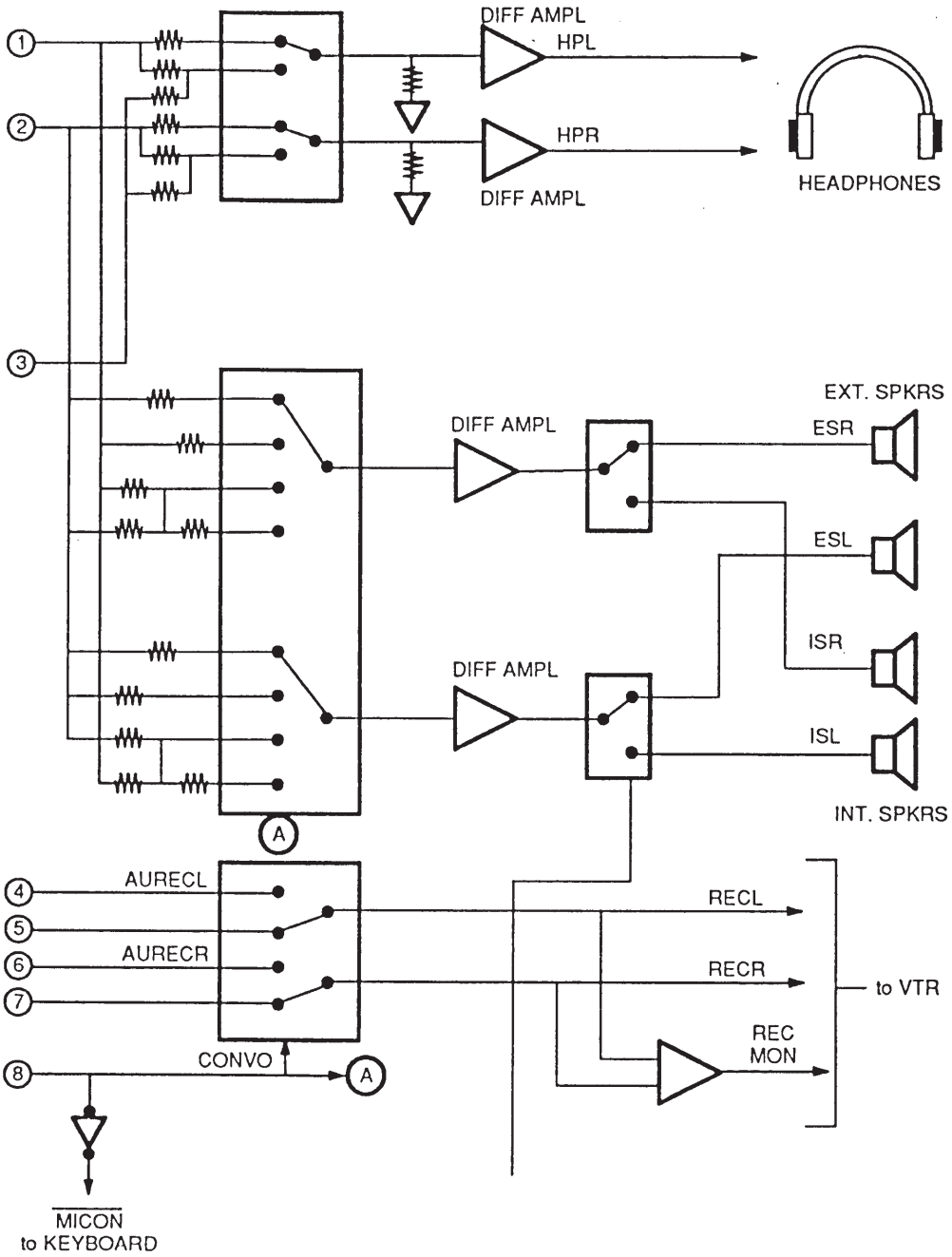

AUDIO ASSY BLOCK DIAGRAM
ILLUSTRATION 5—20(b)

5–4–16 Fast Fourler Transform (FFT) Assy

Function : Following analog/digital conversion, the Digital Signal Processor on this board breaks down the I/Q Doppler echo signal into its fundamental sinusoids to form an amplitude/frequency spectrum. This spectrum is converted to a power spec trum, which is sent to the FM3 Assy and RSC Assy. Required for cardiac blood volume and flow calculations.

Controlled By : MST Assy via the CPU bus; RTC via the USC bus.

Inputs Come From : AUDIO, MST, RTC, FM3, TRA, and IOP Assemblies

Outputs Sent To : FM3, RSC, MST Assemblies

Functional Description

Referring to Illustration 5—21, the FFT Assy Block Diagram, this PC Board can be divided into eight functional blocks:

a. Data Acquisition System;
b. Wave Buffer;
c. Digital Signal Processor;
d. Log Compressor LookUp Table (LUT);
e. Extended Data Memory;
f. Spectrum Buffer;
g. Recorder Buffer;
h. Strip Chart Recorder (SCR) DAC.

1. Data Acquisition System: The I/Q Doppler echo outputs from the Audio Assy are sampled and held, then analog— to–digital converted. The digitized output is stored in a wave buffer.

2. Wave Buffer: The digitized I/Q Doppler outputs of the Data Acquisition System are stored in a RAM wave buffer.

3. Digital Signal Processor (DSP): Doppler data from the wave buffers is sent to this section. It consists of a TMS3201 0 Digital Signal Processor, Static RAM ICs, muitiplexer ICs,and Program ROM ICs. The DSP decodes and converts doppler amplitude and frequency to power spectrum data.

4. Log Compressor Lookup Table (LUT) RAMS: These RAMS output the SP DATA (Spectrum Data) bus to the spectrum and recorder buffers in accordance with the DATA BUS address from the DSP. Initially, the lookup table parameters and some control signals are provided by the CPU ADR bus from the MST CPU. The other control signals for the LUT RAMS are decoded by the CPU DATA bus.

5. Extended Data Memory: Four RAM ICs provide 16K x 16 bits of added memory to handle the large I and Q Doppler data sample required for FFT processing. (The DSP only has a 144 byte memory cache).

5–4–16 Fast Fourier Transform (FFT) Assy (Continued)

6. Spectrum Buffer: The FFT—analyzed data is stored in this buffer and sent to the FM3 Assy for scan conversion. The buffer RAMs are divided into A and B circuits, so that the "A" RAM is loading while the "B" RAM is writing, and vice—versa. This is the doppler storage equivalent of the FM3 Line Buffers that store M—mode data in the FM3 Assy.

7. Recorder Buffer: RecorderBufferRAM ICs load andwrite out data to the optional strip chart recorder via the RSC Assy. Loading and writing is synched to spectrum buffer operation.

8. SCR Output DAC: The digitized data from the recorder buffer is converted to analog by this Digital to Analog converter IC.

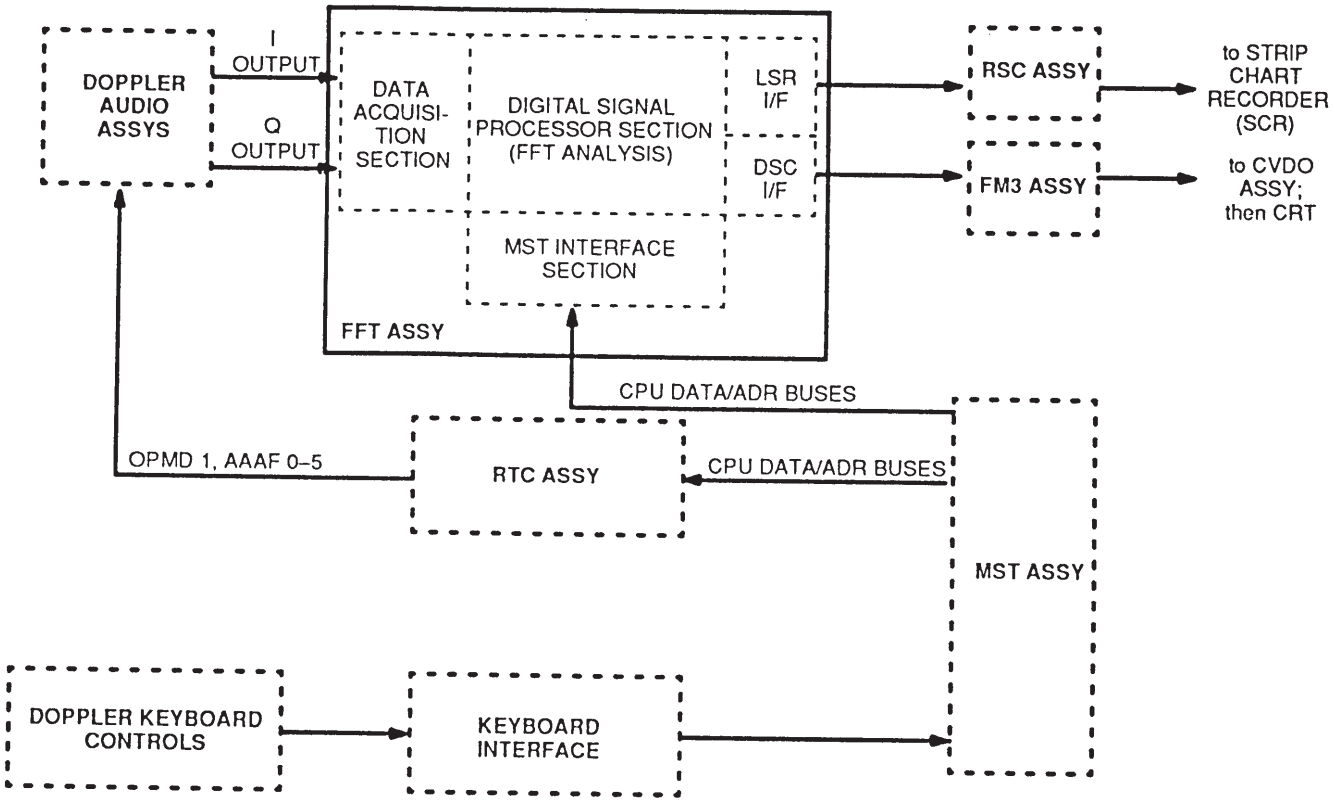

FAST FOURIER TRANSFORM (FFT) ASSY BLOCK DIAGRAM
ILLUSTRATION 5—21

5–4–17 Physiological Signal Isolation Amplifier (PSIA)

Function : AC isolates and sends ECG, PCG, AUX1 and AUX2 physiological signals to the Physiological Scale Amplifier (PSSA2).

Controlled By : EGAIN (2 bits) from the keyboard.

Inputs Come From : PSSA2, patient PCG, ECG, AUX1/AUX2 cables, PCG Microphone.

Outputs Sent To : PSSA2 Assy.

Functional Description

Referring to Illustration 5—22, the PSIA Assy Block Diagram, this PC Board can be divided into the ECG Isolation Amplifier section, PCG Isolation Amplifier section, and the AUXl/AUX2 Isolation Amplifier section.

1. ECG Isolation Amplifier Section: The state of EGAIN bits 0 and 1 selects one of four gain levels for the ECG signal by controlling. (This is controlled by the EGAIN potentiometer setting in the upper, hidden front panel controls). The ECG signal is ac isolated, amplified and sent to the PSSA2 Assy.

2. PCG Isolation Amplifier Section: This section ac isolates and amplifies PCG signal, then sends it to the PSSA2 Assy.

3. AUX1/AUX2 Isolation Amplifier Section: This section ac isolates and amplifies AUX1 and/or AUX2 signal, then sends it to the PSSA2 Assy.

5–4–17 Physiological Signal Isolation Amplifier (PSIA) (continued)

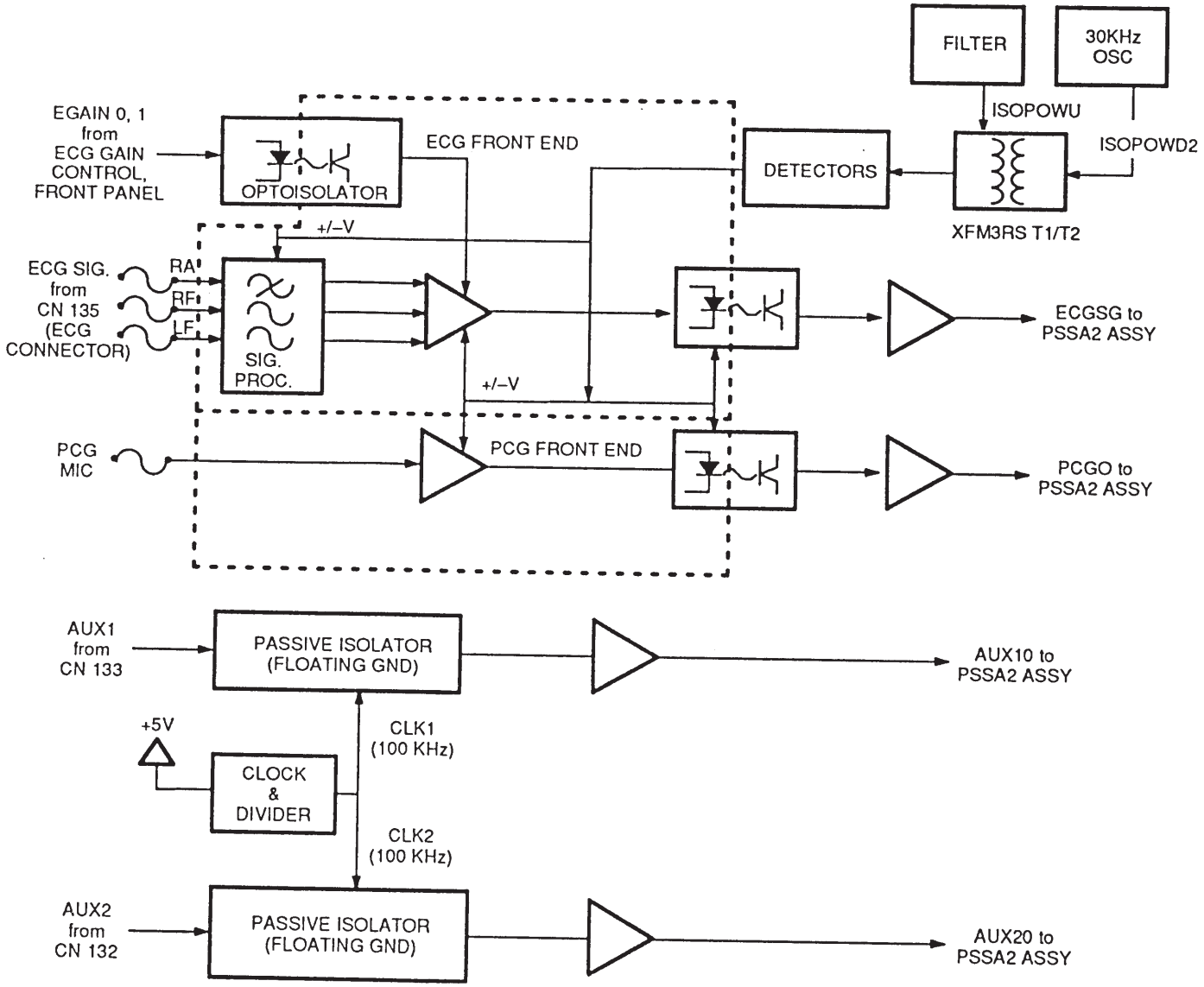

PSIA ASSY BLOCK DIAGRAM
ILLUSTRATION 5—22

5–4–18 Physiological Signal Scale Amplifier 2 (PSSA2) Assy

Function : This PC Board filters, then impedance matches the ECG, PCG, AUXl and AUX2 signals to the digital and linear scan converters in the Frame Memory 3 Assy and Recorder Scan Converter, respectively.

Controlled By : Keyboard commands.

Inputs Come From : PSIA Assy, RTC Assy, and keyboard

Outputs Sent To : RSC Assy, Waveform Display 2 (WD2) Assy, Audio Assy.

Functional Description

Referring to Illustration 5—23, the PSSA2 Assy Block Diagram, this PC Board can be divided into four blocks:

a. ECG section;
b. PCG section;
c. AUX section;
d. Test Signal Generator section.

1. ECG Section: This section receives ECG signal from the PSIA Board, filters out hum and noise, amplifies it, then sends it to the WD2 Assy and RSC Assy.

2. PCG Section: This section receives PCG signal, filters it, amplifies it, and sends it to the Audio, WD2, and RSC Assemblies.

3. AUXSection: This section receives AUX1 and/orAUX2 signal, filters it, amplifies it, and sends it to the WD2 Assy.

4. Test Signal Generator Section: This section receives ATS signal from the RTC Assy via the USC bus and uses it as a basis for generating the ECG, PCG, AUX1/2 test signals.

5–4–18 Physiological Signal Scale Amplifier 2 (PSSA2) Assy (continued)

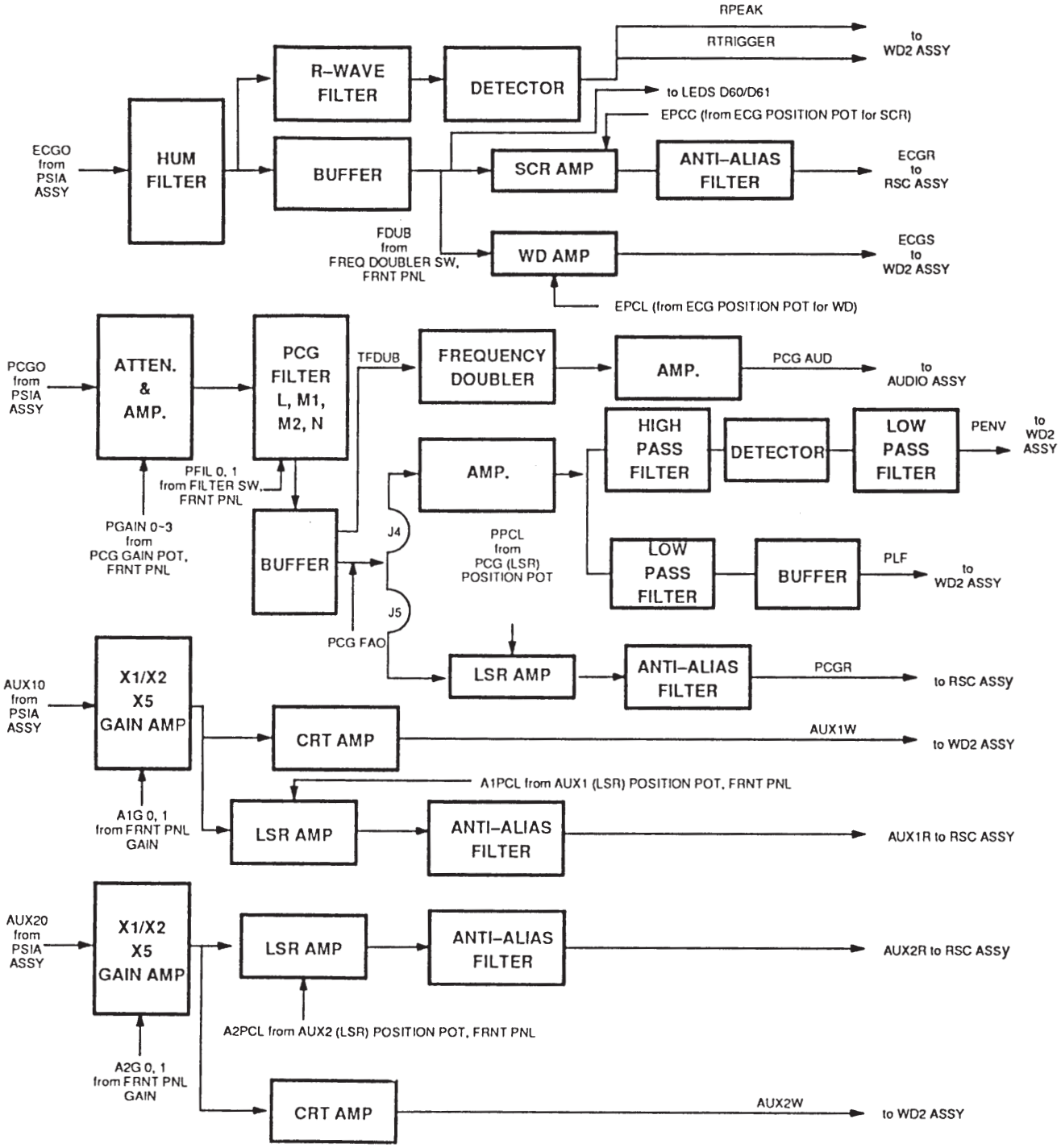

PSSA2 ASSY BLOCK DIAGRAM
ILLUSTRATION 5–23

5–4–19 Waveform Display 2 (WD2) Assy

Function : This PC Board produces whitescale displays of the ECG, PCG, AUX1 and AUX2 signal traces sent from the PSSA2 Assy.

Controlled By : MST Assy via the CPU bus.

Inputs Come From : PSSA2 Assy, MST Assy, CVDO Assy, FM3 Assy.

Outputs Sent To : CVDO Assy.

Functional Description

Referring to Illustration 5—24, the WD2 Assy Block Diagram, this PC Board can be divided into seven functional blocks:

a. Anti—Alias Filter section;
b. Data Acquisition section;
c. Register Files section;
d. Digital Signal Processor (DSP) section;
e. Line Buffer section;
f. Frame Memory section;
g. R—Delay Timer section.

1. Anti—Alias Filter Section: One kHz and higher auxiliary and/or ECG frequencies from the PSSA2 Assembly are low pass attenuated by more than 54 dB.

2. Data Acquisition Section: The sampled physiological signal is applied to a Sample and Hold Amplifier. Then it is converted to a 10—bit A/D DATA bus by an A/D Converter.

3. Register Files Section: Six, four—bit register file ICs store the AID DATA words. These registers compensate for the speed difference between fast DSP (Digital Signal) processing and the relatively slow analog to digital conversion process which just occurred.

4. Digital Signal Processor (DSP) Section: This section consists of Texas Instruments TMS3201 0 Digital Signal Processor that compares and averages current and old frame memory data words, then load the result into the line buffer.

5. Line Buffer Section: Edited data from the digital signal processor IC is stored in this line buffer.

6. Frame Memory Section: This is a 512 bit x 512 bit x 1 bit deep CMOS RAM memory array. Each data bit will be stored as a whitescale overlay pixel. The Frame Memory's serial data output is sent to the CVDO Assy as OVLY ECG/ to be superimposed over the ultrasound image for CRT display.

7. R—Delay Timer Section: During ECG mode, the operator may press the SYNC1 or SYNC2 front panel keys to set up timing markers to synchronize image B—mode image updates up to 1999 msec after the R wave portion or T wave portion of the ECG trace. This section uses a programmable timer to generate either or both of these timing markers.

5–4–19 Waveform Display 2 (WD2) Assy (continued)

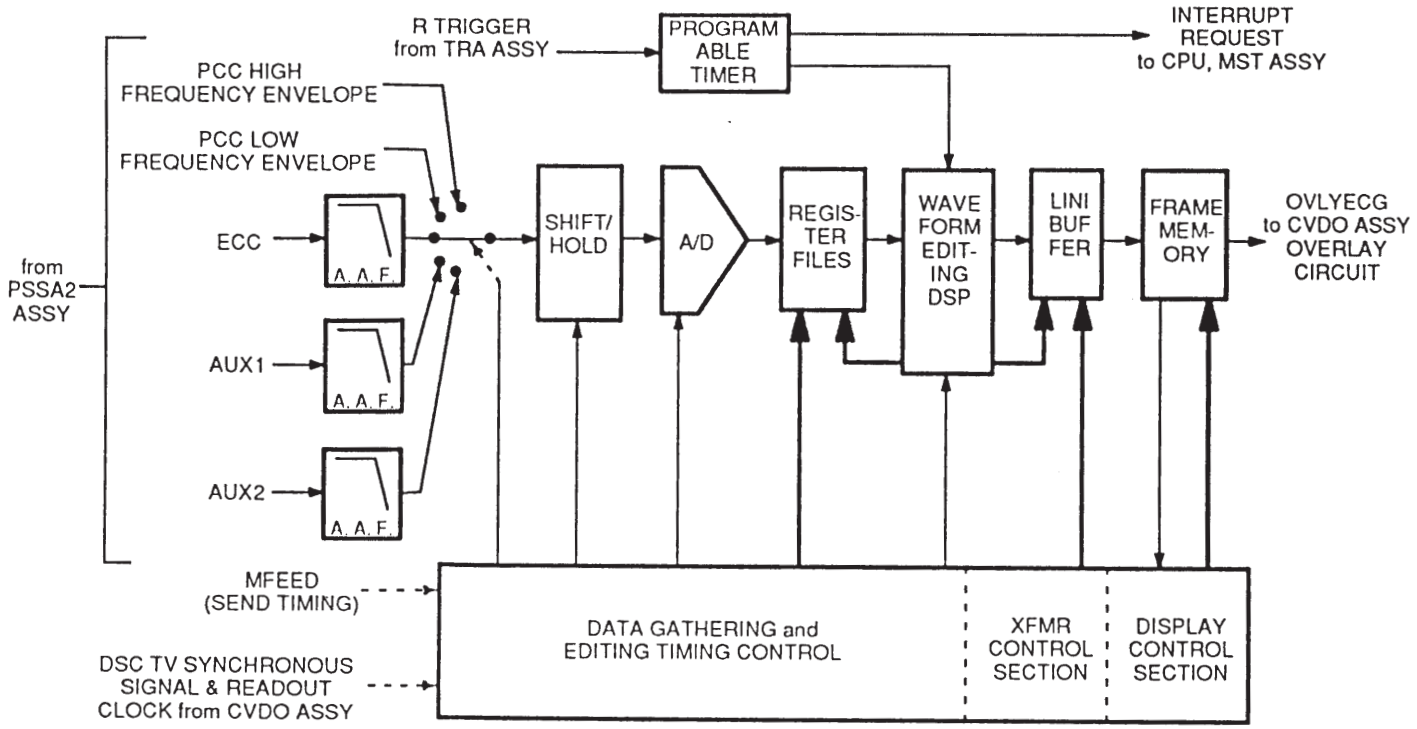

WAVEFORM DISPLAY 2 (WD2) ASSY BLOCK DIAGRRAM
ILLUSTRATION 5–24

5–4–20 Recorder Scan Converter (RSC) Assy

Function : This PC Board is the scan converter for the Strip Chart Recorder.

Controlled By : MST Assy; I/O Processor Assy.

Inputs Come From : Log Assy, FFT Assy, PSSA2 Assy, TRA Assy, MST Assy, IOP Assy.

Outputs Sent To : Strip Chart Recorder, MST Assy, IOP Assy.

Functional Description

Referring to Illustration 5—25, the RSC Assy Block Diagram, this PC board can be divided into six functional blocks:

a. Z—Axis Generator section;
b. Read/Write Control Circuit section;
c. Marker RAM section;

5–4–20 Recorder Scan Converter (RSC) Assy (continued)

d. A/N RAM section;

e. X—Axis Ramp Generator section;

f. PPM (Pulse Position Modulation) Circuit section.

1. Z—Axis Generator Section: This section receives analog echo and Doppler signals from the Log Amplifier and FFT Assy. Analog inputs are filtered, buffered, and digitized. Time and scale markers are superimposed and the signal composite is sent to the Strip Chart Recorder.

2. Read/Write Control Circuit Section: This section generates addresses for the line buffer, marker RAM, and A/N RAM.

3. Marker RAM Section: This section stores the time/depth marker data that are later sent to the Strip Chart Recorder at fixed time intervals.

4. A/N RAM Section: This section stores the scan parameters for the strip chart recorder display.

5. X—Axis Ramp Generator Section: This section contains a 16 MHz clock, counters, and a ramp generator to generate the X axis signal and line buffer read addresses.

6. PPM (Pulse Position Modulation) Circuit Section: This section compares the ramp signal and physiological signal voltage to generate the physiological signal overlay enabling pulse.

This page is left blank intentionally.

5–4–20 Recorder Scan Converter (RSC) Assy (continued)

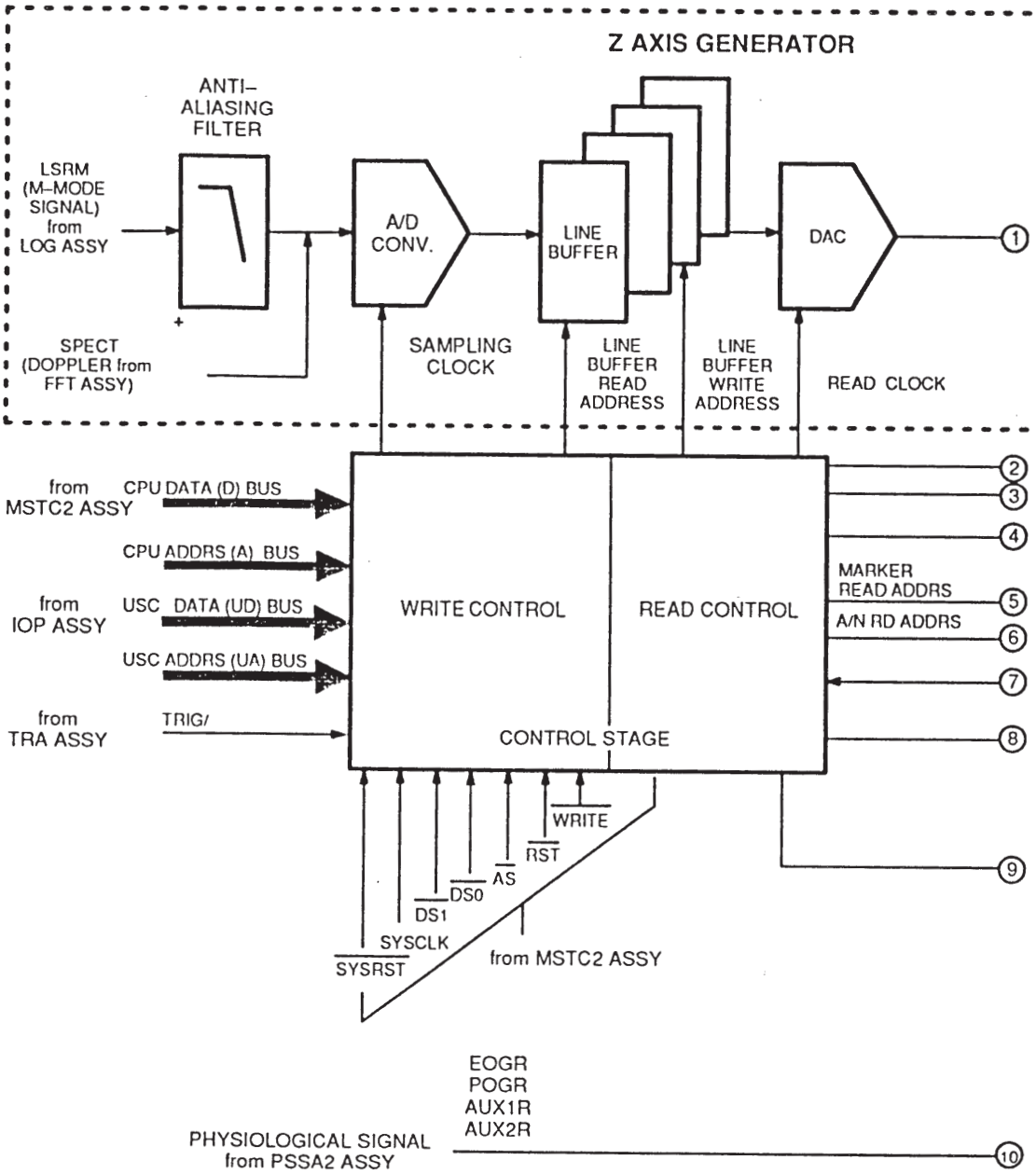

RECORDER SCAN CONVERTER (RSC) ASSY BLOCK DIAGRAM
ILLUSTRATION 5—25 (a)

5−4−20 Recorder Scan Converter (RSC) Assy (continued)

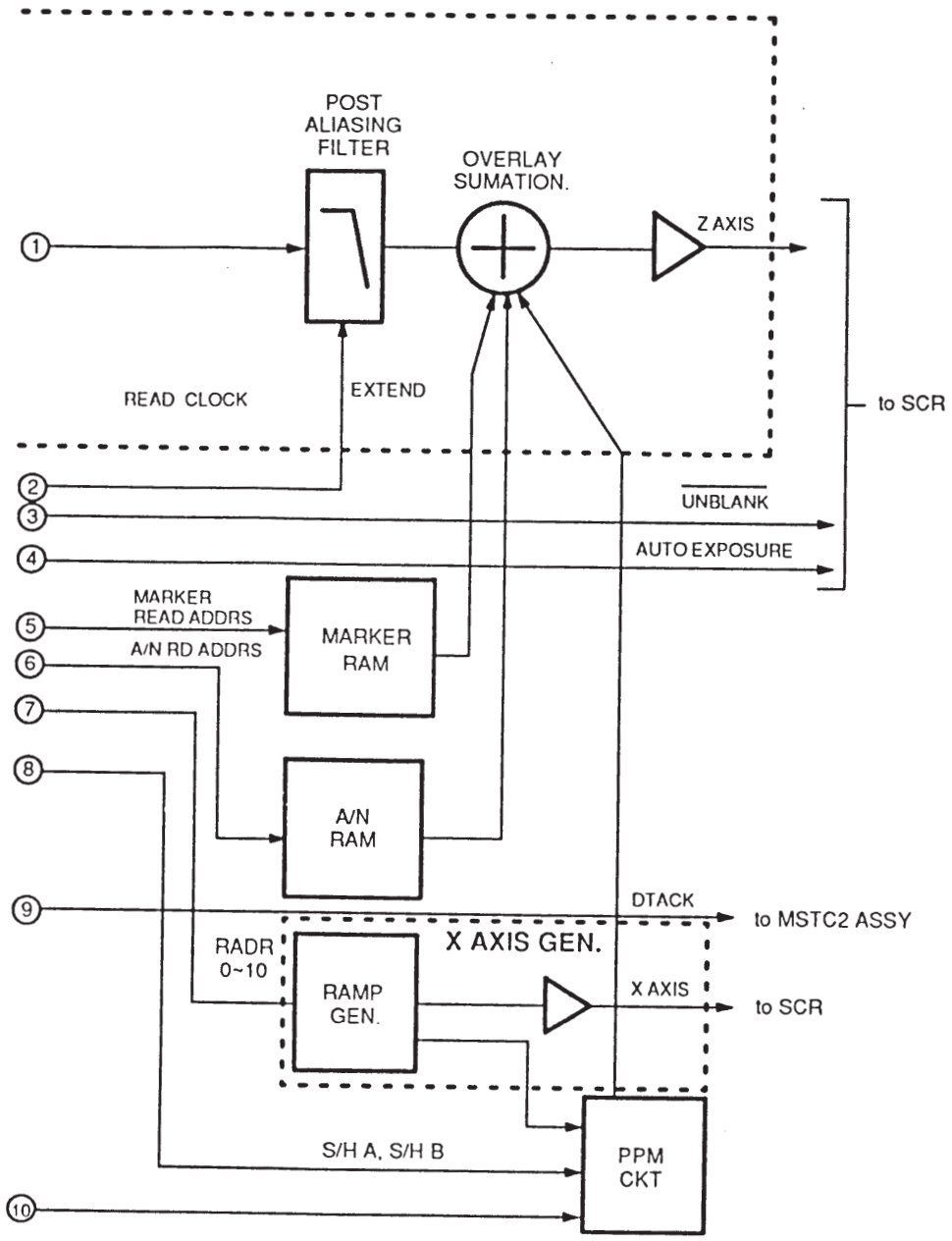

RECORDER SCAN CONVERTER (RSC) ASSY BLOCK DIAGRAM
ILLUSTRATION 5−25 (b)

5–4–21 Video Tape Recorder Playback (VTR PB) Assy

Function : When commanded, this optional PC Board produces a noise—free frozen video image on the CRT. The incoming video from the VCR (VTR) is A/D converted, stored in two planes of frame memory RAM as data pixels, reconverted to analog, and sent to the CVDO Assy for display on the monitor.

Controlled By :MST Assy via the CPU DATA, CPU ADDRESS buses; CVDO Assy via the CSYNC (Composite Video Sync) signal.

Inputs Come From :CVDO Assy, MST Assy, Video Cassette Recorder.

Output Sent To :CVDO Assy (PB LINE signal).

Functional Description

Referring to Illustration 5—26, the VTR PB Assy Block Diagram, this PC Board can be divided into seven functional blocks:

a. Sync Separation & Level Adjust section;
b. A/D and Serial to Parallel section;
c. Field Memory section;
d. Parallel to Serial & D/A section;
e. Horizontal Control section;
f. Vertical Control section;
g. Field Memory Transfer Control section.

1. Sync Separation & Level Adjust Section: This section separates the EXTCS (External Chip Select) signal from the VIDEO signal and voltage shifts the signal level to permit analog to digital conversion.

2. Analog/Digital (A/D) and Serial to Parallel Section: The analog to digital converter resolves the analog VCR data into 6 bit digital data; then a shift register converts it from serial to parallel. Signal polarity is inverted during A/D conversion, so that all zeroes represents an all white video pixel; all one's represents an all black video pixel. Sixty—four grayscale gradations from black to white for any pixel are possible.

3. Field Memory Section: This section stores the video data. It consists of two memory fields of dynamic RAM designated 1st Field and 2nd Field. A frozen VCR display is 1400 bits wide, 320 bits high, and 6 bits deep. (Depth represents signal amplitude). As with other frame memories in the RT 6000/RT 6800, the 1st Field reads data out to the CVDO Assy while the 2nd Field writes data into its DRAM, and vice—versa. Per U.S. National Television System Ccmmittee (NTSC) requirements, the first field of VCR image data is written to the 1st Field Memory; the second field to the 2nd Field Memory.

4. Parallel to Serial & D/A Section: The resolved six—bit data bus is reconverted to serial by shift registers, then converted to analog by a digital to analog converter for outpUt to the VTR.

5–4–21 Video Tape Recorder Playback (VTR PB) Assy (continued)

5. Horizontal Control Section: This section generates the horizontal display write/read control signals for the field memories.

6. Vertical Control Section: This section generates the vertical display write/read control signals for the field memories.

7. Field Memory Transfer Control Section: This section generates the WE (Write Enable), OE (Output Enable), and CS (Chip Select) signals controlling the field memory Dynamic RAMs.

5–4–21 Video Tape Recorder Playback (VTR PS) Assy (continued)

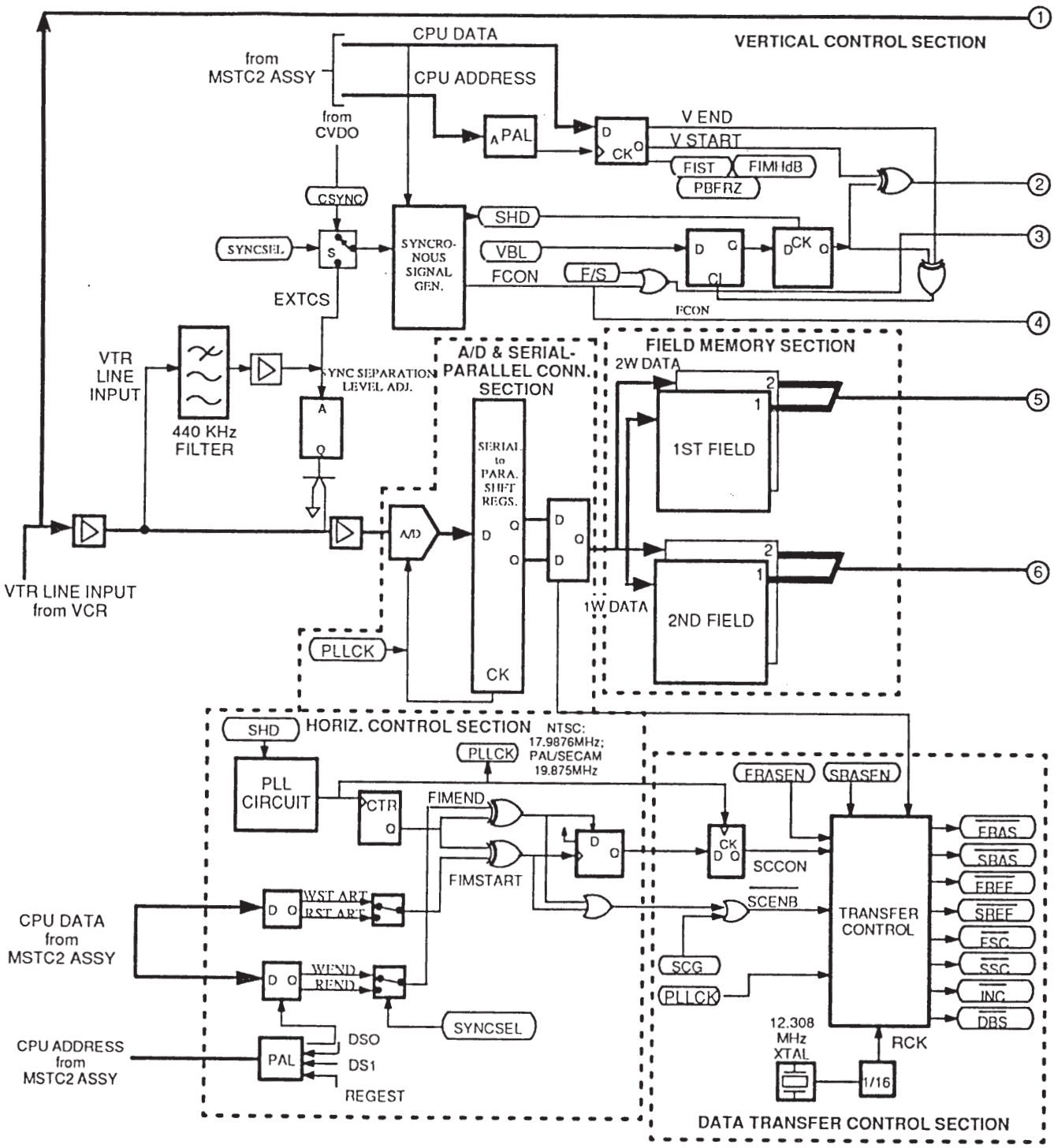

VTR PB ASSY BLOCK DIAGRAM
ILLUSTRATION 5—26 (a)

5–4–21 Video Tape Recorder Playback (VTR PB) Assy (continued)

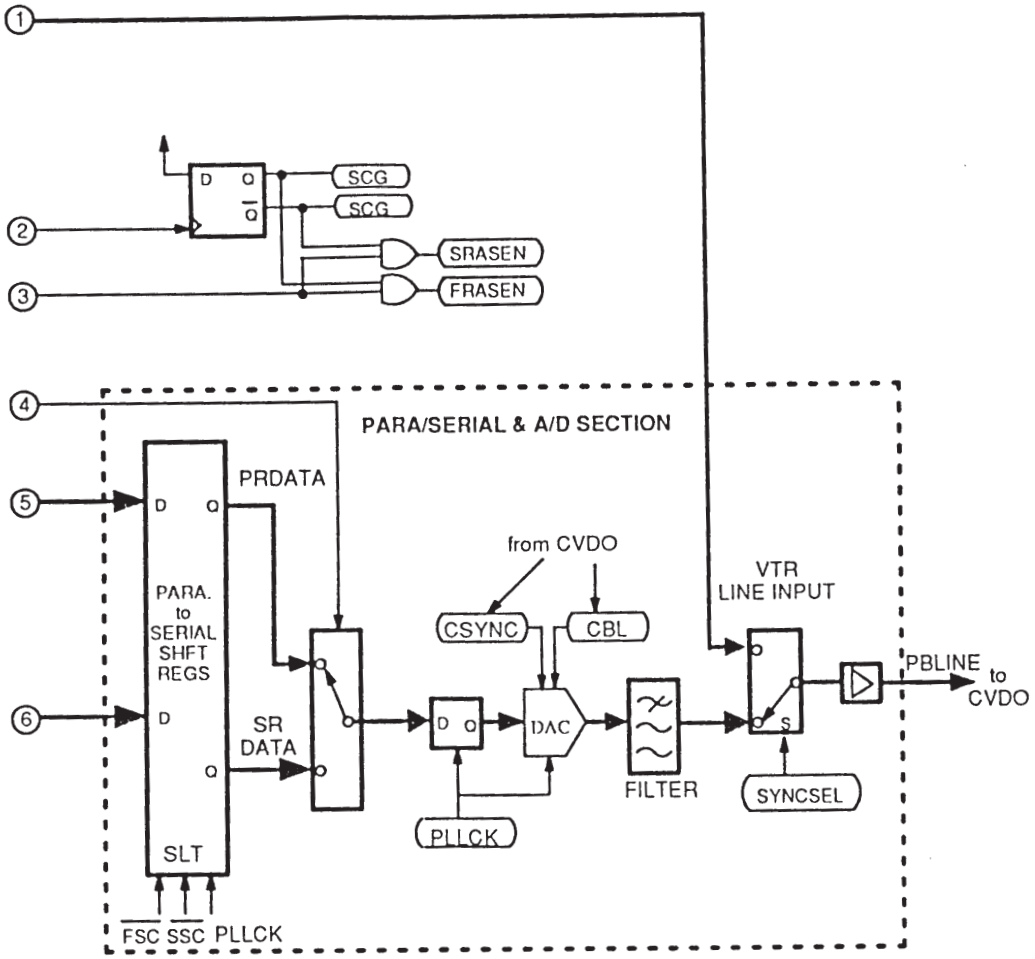

VTR PB ASSY BLOCK DIAGRAM
ILLUSTRATION 5–26 (b)

5–4–22 Connector (CONN) Assy

Function : Selects; connects the probe to the RT 6000/RT 6800 Console.

Controlled By : Operator via keyboard; IOP Assy.

Inputs Come From : IOP Assy, TRA Assy.

Outputs Sent To : IOP Assy (P OPEN, PC 0—5); PDS Assy (Echo Returns);

Functional Description

Referring to Illustration 5—27, the Connector Assy Block Diagram, the PS (Probe Select) bus from the IOP Assy is decoded to connect the Probe 1 or Probe 2 connector to the Transmitter Assy. Or, the PS bus connects the CW Doppler connector to the Color Doppler Assy. (Probe 1 and 2 connectors are used for phased array probes; the CW connector is used for the CW Doppler probe).

1. When phased array probe connectors 1 or 2 are connected, 64 channels of transmit pulses (ES 0—63) can be applied to the selected phased array probe; receive echoes (ESR 0—63) are returned to the PDS Assy for processing. The selected probe also returns P OPEN high true and the 6 bit PC (Probe Center Frequency) bus to the IOP Assy. P OPEN indicates the selected probe is active; PC 0—5 defines its center frequency.

2. When the CW Doppler probe is connected, it receives one channel of TCW (Transmit Continuous Wave) transmit signal from the Color Doppler Assy via connector CN33. It also returns RCW (Receive Continuous Wave) doppler signal to the Color Doppler Assy via connector CN34.

5–4–22 Connector (CONN) Assy (continued)

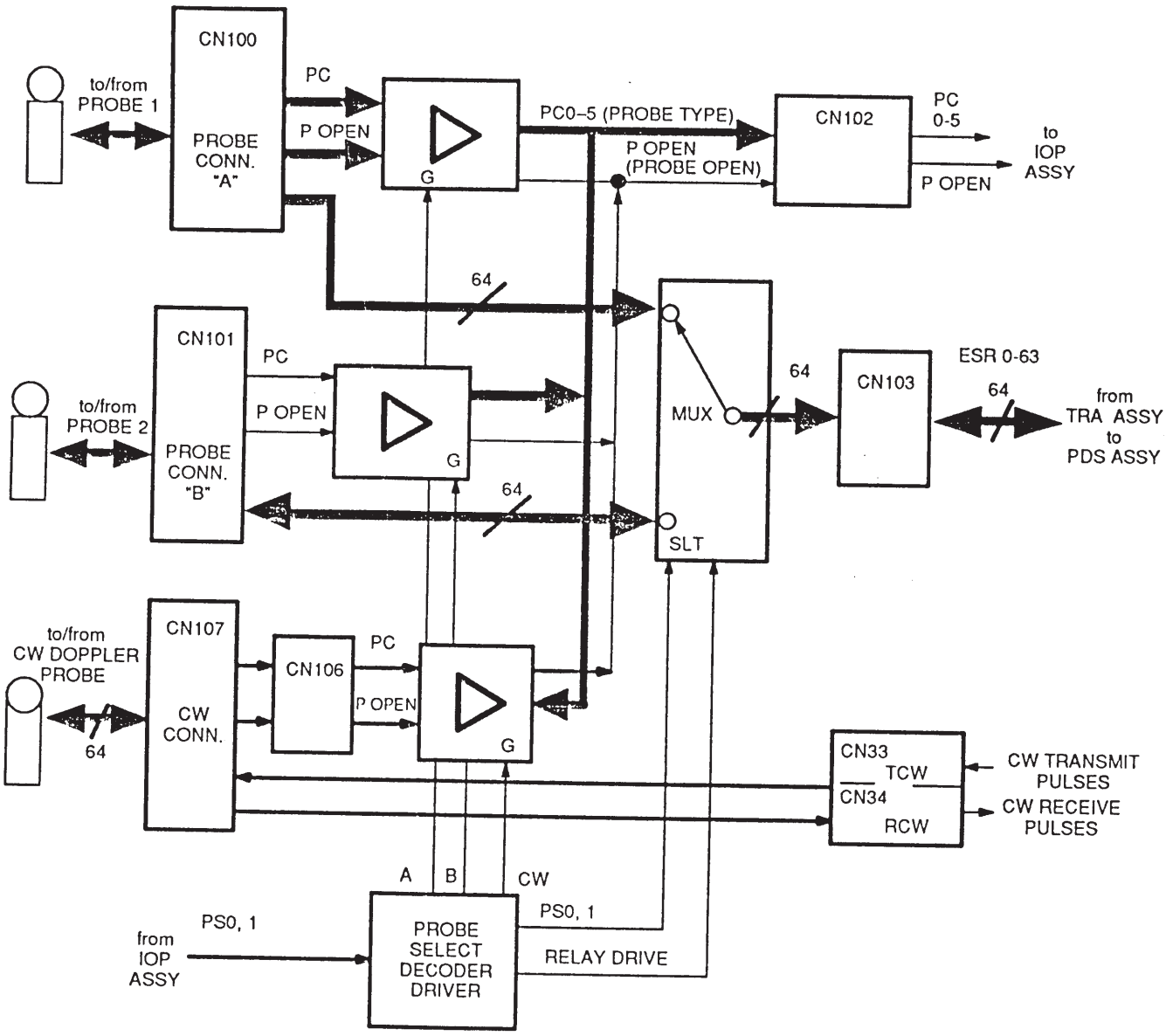

CONNECTOR (CONN) ASSY BLOCK DIAGRAM
ILLUSTRATION 5–27

6–1 INTRODUCTION

This chapter provides service adjustment procedures for the RT 6000/RT 6800. Adjustments should only be made when necessary.

6–2 POWER SUPPLY ADJUSTMENTS

There are seven power supplies in the bottom of the RT 6000/RT6800. These power supplies are located as shown in Illustration 6—1a, and are installed as shown in Illustration 6—1b.

6–2–1 Power Supply Access

1. Remove each two Phillips screws fastening bottom covers on either side of RT 6000/RT 6800. See Illustration 6—1a.

2. Refer to Illustration 6—1 b for the location of each power supply.

6−2−1 Power Supply Access (continued)

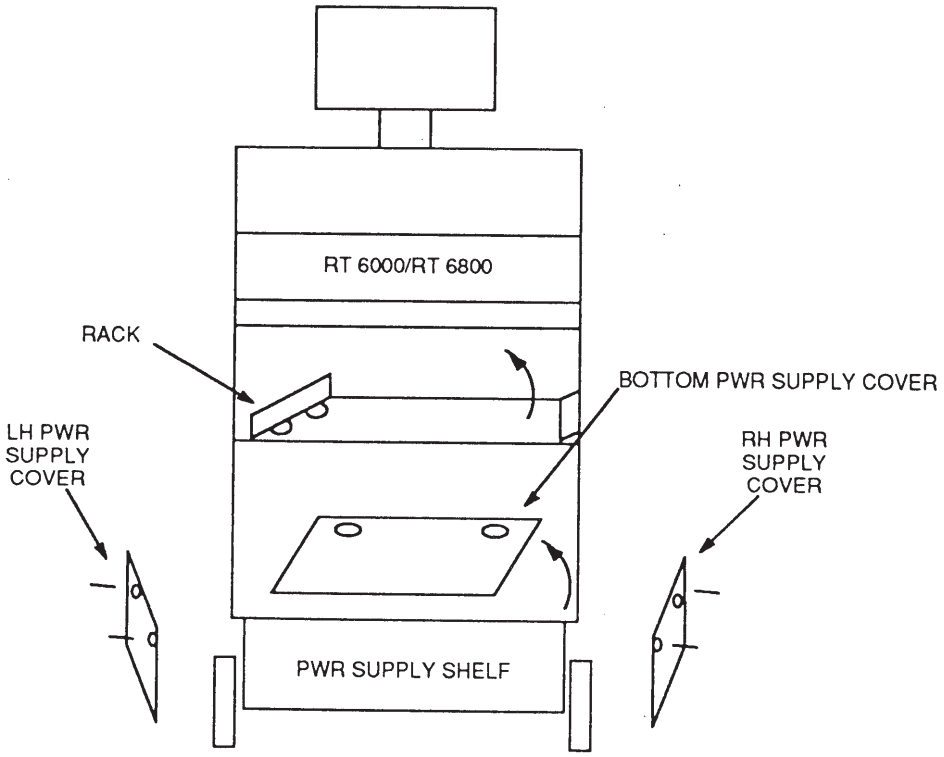

POWER SUPPLY COVER REMOVAL
ILLUSTRATION 6—1a

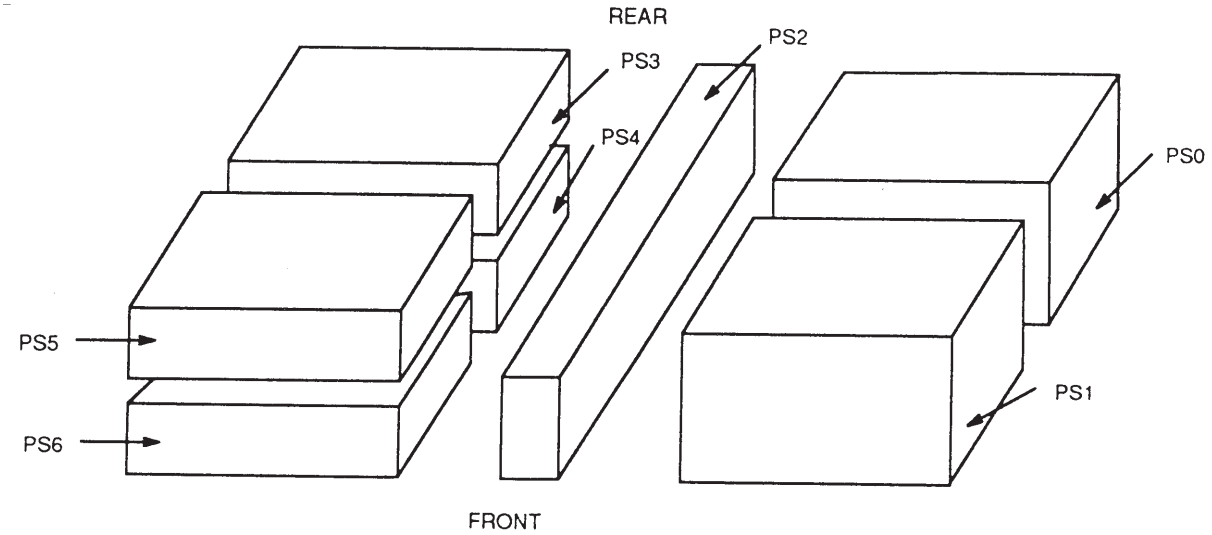

LOCATION OF RT 6000/RT 6800 POWER SUPPLIES
ILLUSTRATION 6−1b

6−2−2 5 V, 30 A Power Supply PS0 Adjustment

1. Locate PS0 on right rear side of RT 6000/RT 6800 (as seen from front). Output cables are yellow.
2. Connect positive dvm lead to +5 V terminal; negative dvm lead to chassis ground tab. See Illustration 6—2.
3. Turn ON RT 6000/RT 6800 power. LED indicator goes on. Allow it to warm up for 30 seconds.
4. Adjust PS0 VADJ pot to obtain +5.35 V to +5.6 V. Use a pot adjustment tool or small screwdriver.

6−2−3 5 V, 30 A Power Supply PS1 Adjustment

1. Locate PS1 on right front side of RT 6000/RT 6800 (as seen from front). Output cable is yellow.
2. Connect positive dvm lead to +5 V terminal; negative dvm lead to chassis ground tab. See Illustration 6—2.
3. Turn ON RT 6000/RT 6800 power. LED indicator goes on. Allow it to warm up for 30 seconds.
4. Adjust PS1 VADJ pot to obtain +5.35 V to +5.6 V. Use a pot adjustment tool or small screwdriver.

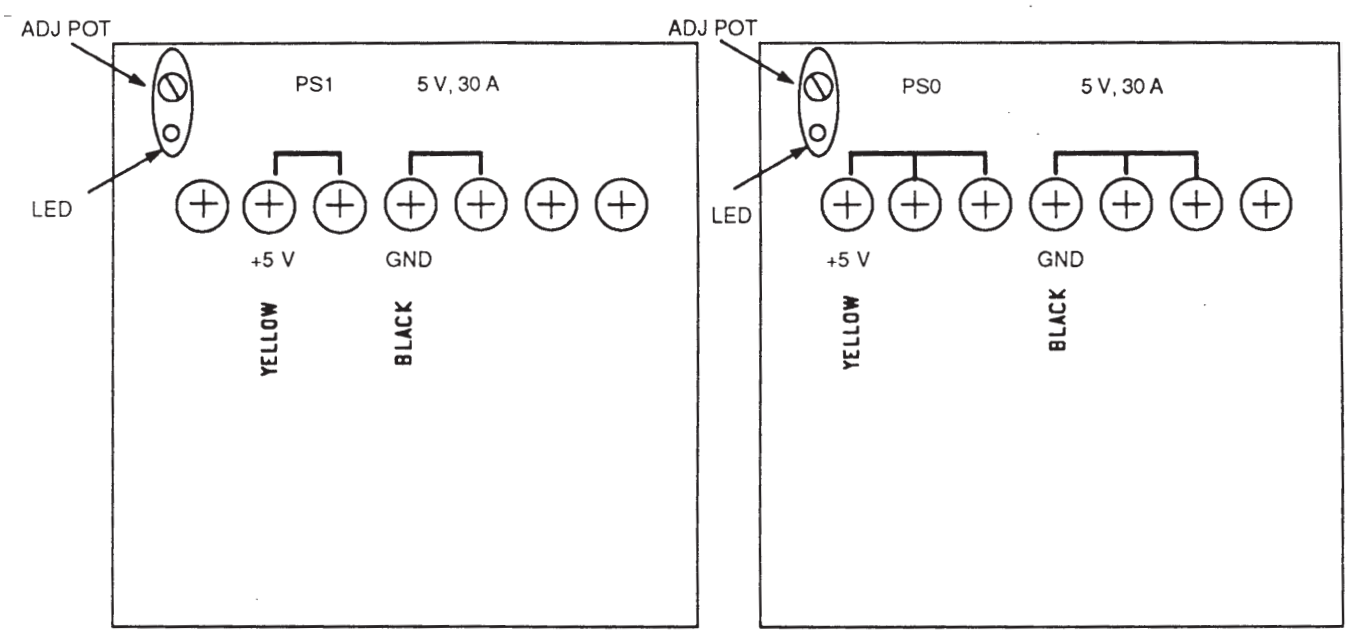

RT 6000/RT 6800 POWER SUPPLIES (RIGHTHAND SIDE VIEW)
ILLUSTRATION 6—2

6−2−4 5 V,10 A Power Supply PS2 Adjustment

1. Locate PS2 on middle of RT 6000/RT 6800 (as seen from front). Output cable is yellow.
2. Connect positiVe dvm lead to +5 V terminal; negative dvm lead to chassis ground tab. See Illustration 6—3.
3. Turn ON RT 6000/RT 6800 power. LED indicator goes on. Allow it to warm up for 30 seconds.
4. Adjust PS2 VADJ pot to obtain +5.35 V to +5.6 V. Use a pot adjustment tool or small screwdriver.

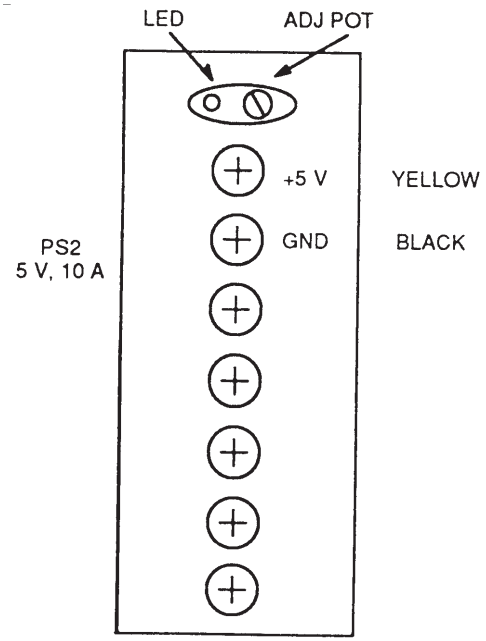

RT 6000/RT 6800 POWER SUPPLY (REAR VIEW)
ILLUSTRATION 6—3

6−2−5 15 V, 4 A Power Supply PS3 Adjustment

1. Locate PS3 on upper left rear side of RT 6000/RT6800 (as seen from front). Output cable is red.
2. Connect positive dvm lead to +15 V terminal; negative dvm lead to chassis ground tab. See Illustration 6—4.
3. Turn ON RT 6000/RT 6800 power. LED indicator goes on. Allow it to warm up for 30 seconds.
4. Adjust PS3 VADJ pot to obtain +14.7 V to +15.6 V. Use a pot adjustment tool or small screwdriver.

6–2–6 –15 V,4 A Power Supply PS4 Adjustment

1. Locate PS4 on lower left rear side of RT 6000/RT 6800 (as seen from front). Output cable is purple.
2. Connect positive dvm lead to —15 V terminal; negatiVe dvm lead to chassis ground tab. See Illustration 6—4.
3. Turn ON RT 6000/RT 6800 power. LED indicator goes on. Allow it to warm up for 30 seconds.
4. Adjust PS4 VADJ pot to obtain —14.7 V to —15.6 V. Use a pot adjustment tool or small screwdriver.

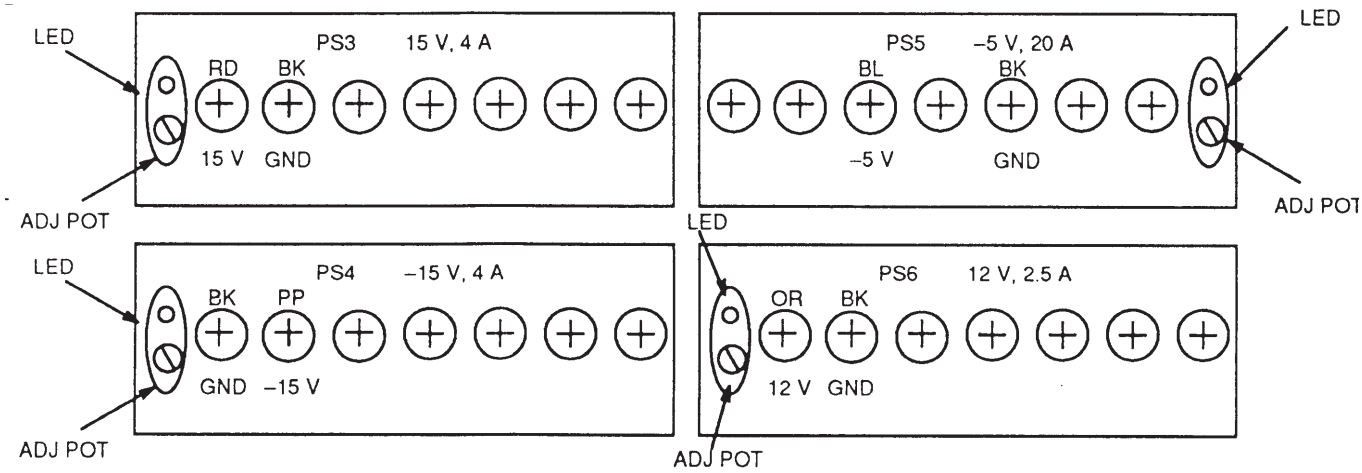

RT 6000/RT 6800 POWER SUPPLIES (LEFTHAND SIDE VIEW)
ILLUSTRATION 6–4

6–2–7 —5 V, 20 A Power Supply PS5 Adjustment

1. Locate PS5 on upper left front side of RT 6000/RT 6800 (as seen from front). Output cable is blue.
2. Connect positive dvm lead to —5 V terminal; negative dvm lead to chassis ground tab. See Illustration 6—4.
3. Turn ON RT 6000/RT 6800 power. LED indicator goes on. Allow it to warm up for 30 seconds.
4. Adjust PSS VADJ pot to obtain —5.4 V to —5.55 V. Use a pot adjustment tool or small screwdriver.

6–2–8 12 V, 2.5 A Power Supply PS6 Adjustment

1. Locate PS6 on lower left front side of RT 6000/RT 6800 (as seen from front). Output cable is orange.
2. Connect positive dvm lead to +12 V terminal; negative dvm lead to chassis ground tab. See Illustration 6—4.
3. Turn ON RT 6000/RT 6800 power. LED indicator goes on. Allow it to warm up for 30 seconds.
4. Adjust PS6 VADJ pot to obtain +11.8 V to +12.53 V. Use a pot adjustment tool or small screwdriver.

This page is left blank intentionally.

7–1 OPERATOR CONSOLE ASSY (RT 6000/RT 6800)

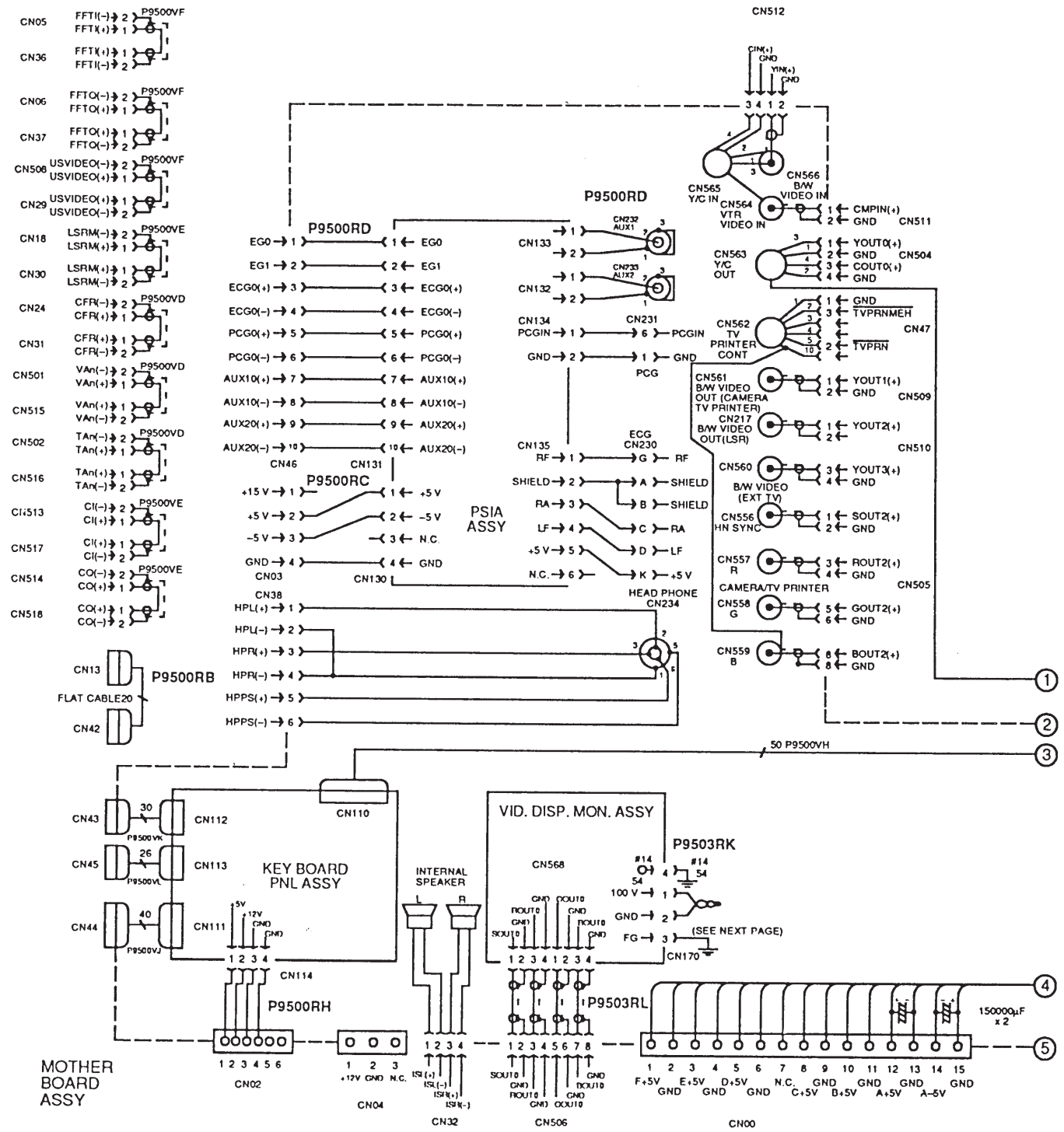

RT 5500 WIRING SCHEMATIC (1)Δ
ILLUSTRATION 7–1(a)

7–1 OPERATOR CONSOLE ASSY (RT 6000/RT 6800) (Continued)

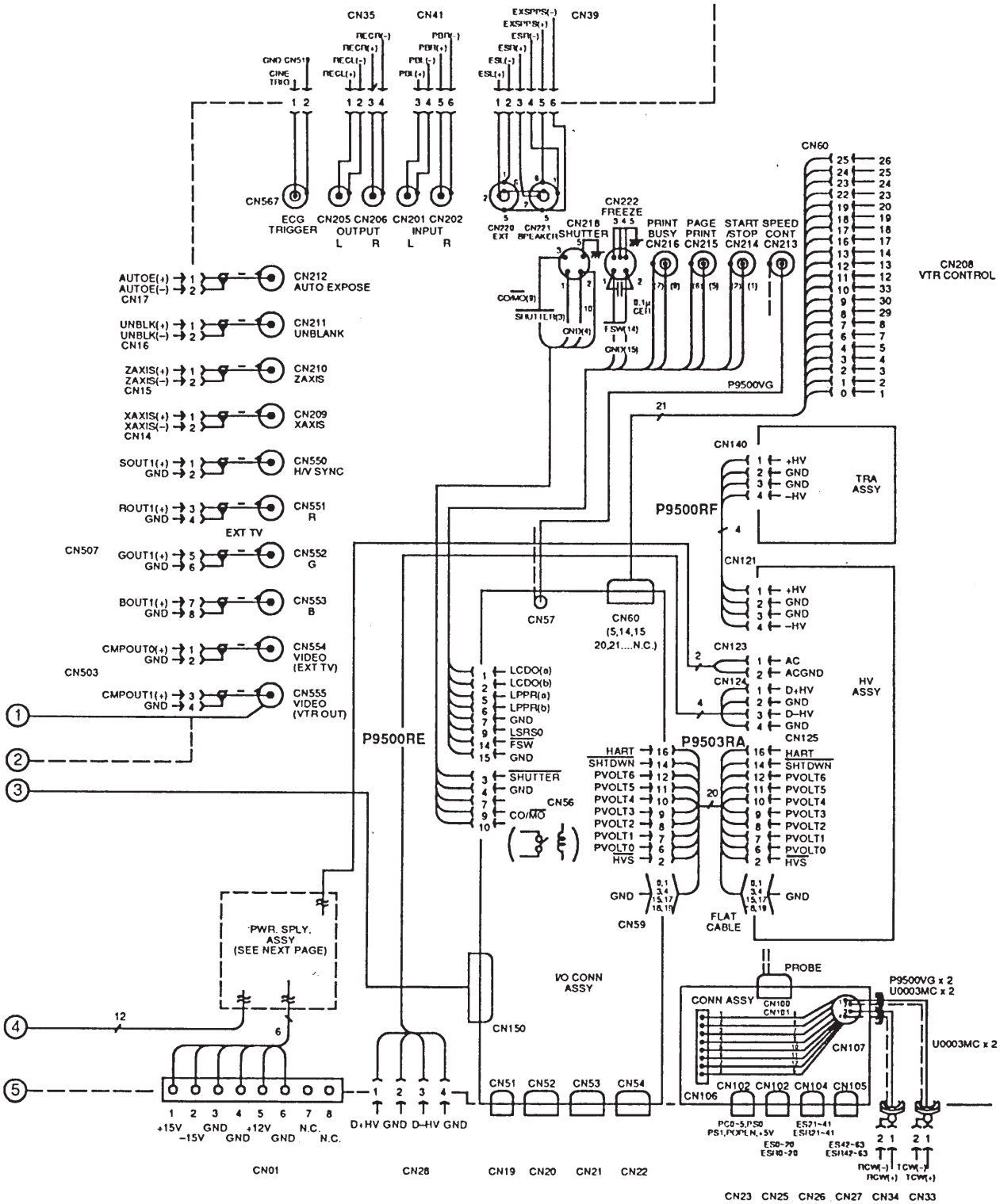

RT 5500 WIRING SCHEMATIC (1)Δ
ILLUSTRATION 7–1(b)

7–1 OPERATOR CONSOLE ASSY (RT 6000/RT 6800) (continued)

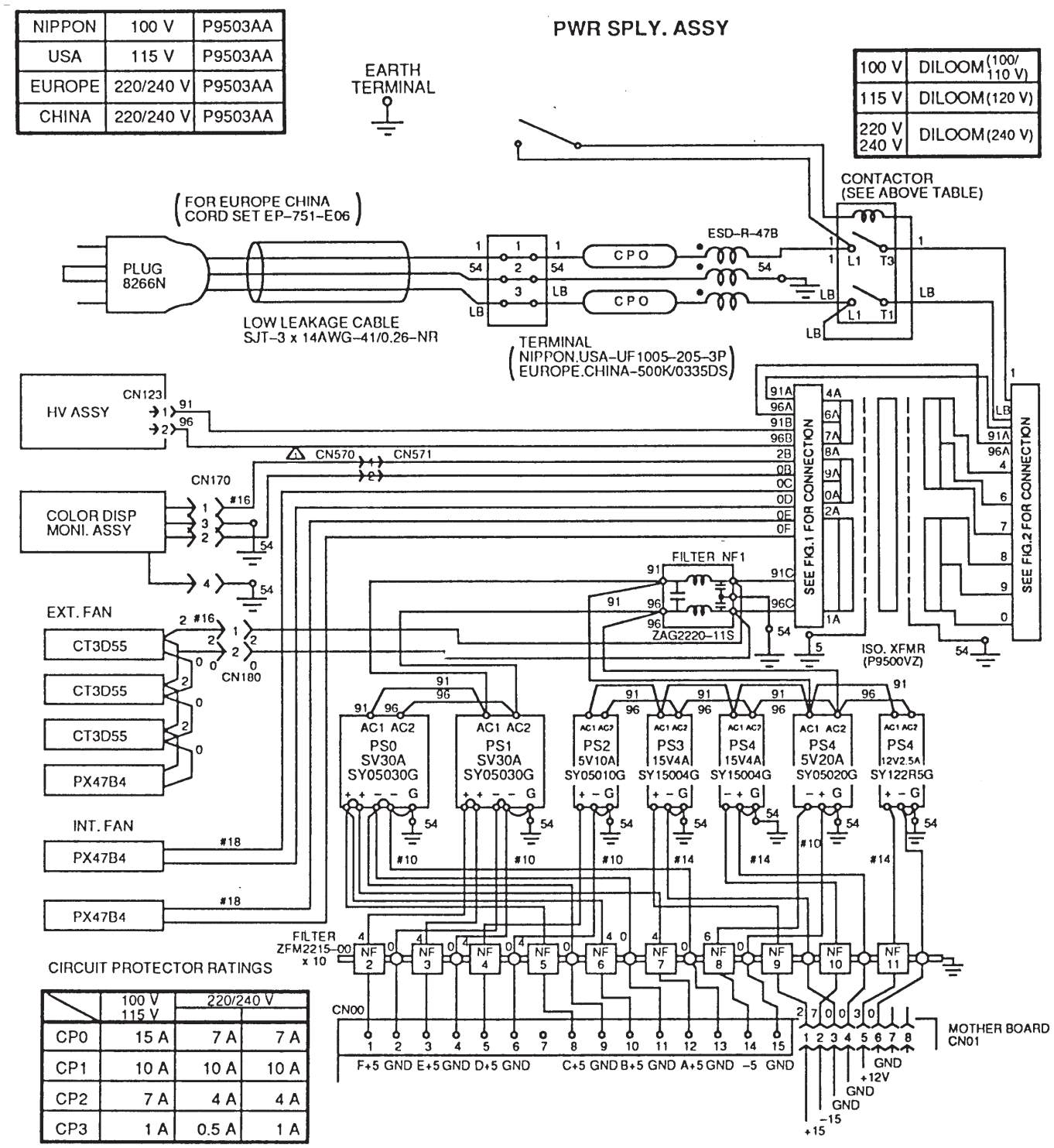

CIRCUIT PROTECTOR RATINGS

	100 V 115 V	220/240 V	
CP0	15 A	7 A	7 A
CP1	10 A	10 A	10 A
CP2	7 A	4 A	4 A
CP3	1 A	0.5 A	1 A

RT 5500 WIRING SCHEMATIC (2)△.
ILLUSTRATION 7–2 (a)

7–1 OPERATOR CONSOLE ASSY (RT 6000/RT 6800) (continued)

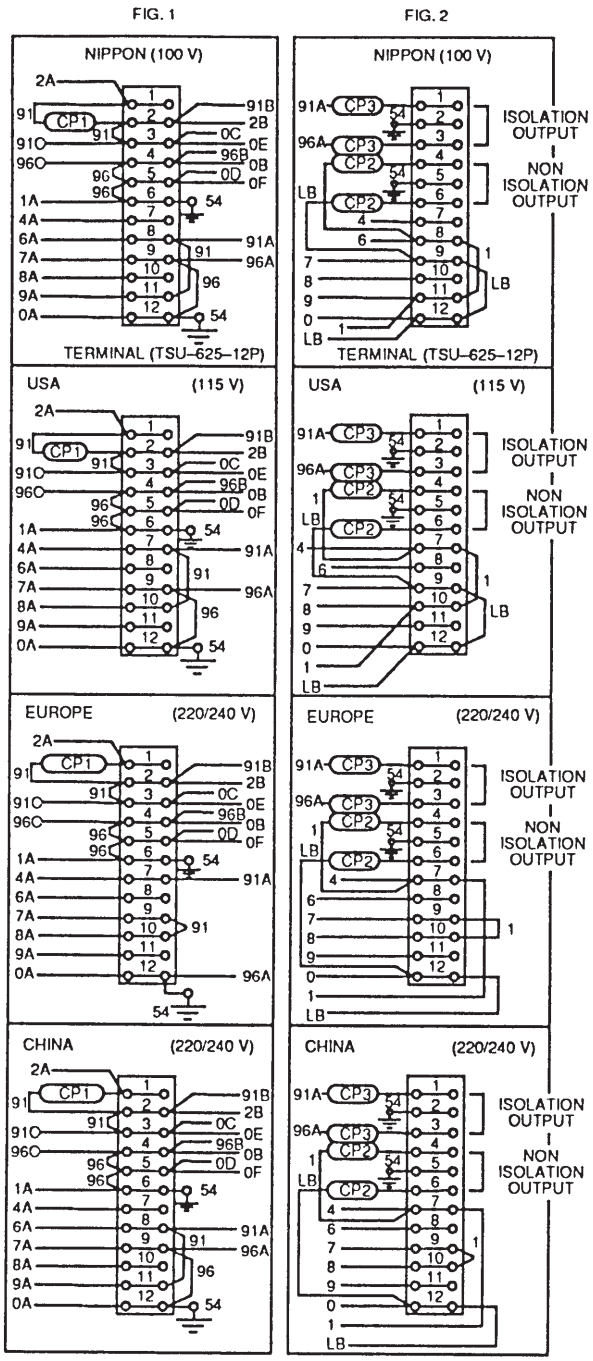

RT 5500 WIRING SCHEMATIC (2)Δ
ILLUTRATION 7–2 (b)

RT5000CFM, RT6000, RT6800

MATERIAL LIST (1/2)

ITEM	PART NAME	PART NO.	QTY.												DESCRIPTION
	Operator CSL Assy														
		P9503AG												1	NTSC, for Japan
	~~(46–285326P1)~~	P9503AH											1		PAL,
	(46–285282G3)														
	(46–285282G1)	P9503AJ										1			NTSC
		P9503AK									1				NTSC, Black and White
	(46–285325P1)	P9503AL								1					PAL,
	(46–285325P1)	P9503AM							1						NTSC, Black and White
	(46–285447G1)	P9503AN						1							PAL, IEC
	(46–285448G1)	P9503AP					1								PAL, IEC, Black and White
	(46–285282G2)	P9503AQ				1									NTSC with CCINE and VTRPB
	(46–285282G5)	P9503AR			1										PAL with CCINE and VTRPB
	(46–285282G4)	P9503AS		1											PAL with CCINE and VTRPB, French Homologation
		P9503AT	1												NTSC, for Japan
	PLUG	U0907FD	1								1			1	
	WIRE EARTH	U0000WZ	1								1			1	
	AQUASONIC GEL	U0403BD	1	1	1	1	1		1	1	1	1	1	1	
	BAG	B9685WX	1	1	1	1	1		1	1	1	1	1	1	

RA5000GE for100V Style C
RA6800FH for 220V Style C
RA6800CH for 220V Style C,
RA6800CK for 115V Style C
RA6000EH for 220V,
RA6800EH for 220V, IEC
RA5000FE for 100V
RA6800BH for 220V
RA6800AK for 115V
RA5000WE for 100V
RA6000BH for 220V
RA6000AK for 115V

RT5000CFM, RT6000, RT6800

MATERIAL LIST (2/2)

ITEM	PART NAME	PART NO.	QTY.												DESCRIPTION
	ECG Cable Assy	P9500UJ	1								1			1	
	ECG Cable Assy	P9500UH		1	1	1	1		1	1	1	1	1		
	ECG Electtrode	B9713TK	2	2	2	2	2		2	2	2	2	2	2	
	PCG MIC	P9500SD	1							1				1	
	PCG Adhesive Tape	U0024BA	1							1				1	
	OP Manual	P9893FL	1							1				1	System Manual
		P9893FM	1											1	CFM Manual
		P9893QP				1			1			1			
		P9893QR		1	1		1			1			1		
	SVC Manual	P9030FB		1	1	1	1		1	1		1	1		
	CWB PROBE	P9600AN		1	1	1	1		1	1		1	1		
	FOOT S/W Assy	P9500NA				1			1			1			
		P9500NB		1	1		1			1			1		
	CONTROLE Cable	P9500TD		1	1	1	1		1	1		1	1		

RA5000GE for100V Style C
RA6800FH for 220V Style C
RA6800CH for 220V Style C,
RA6800CK for 115V Style C
RA6000EH for 220V,
RA6800EH for 220V, IEC

RA5000FE for 100V
RA6800BH for 220V
RA6800AK for 115V
RA5000WE for 100V
RA6000BH for 220V
RA6000AK for 115V

This page is left blank intenionally.

OPERATOR CSL ASSY 1/8 36

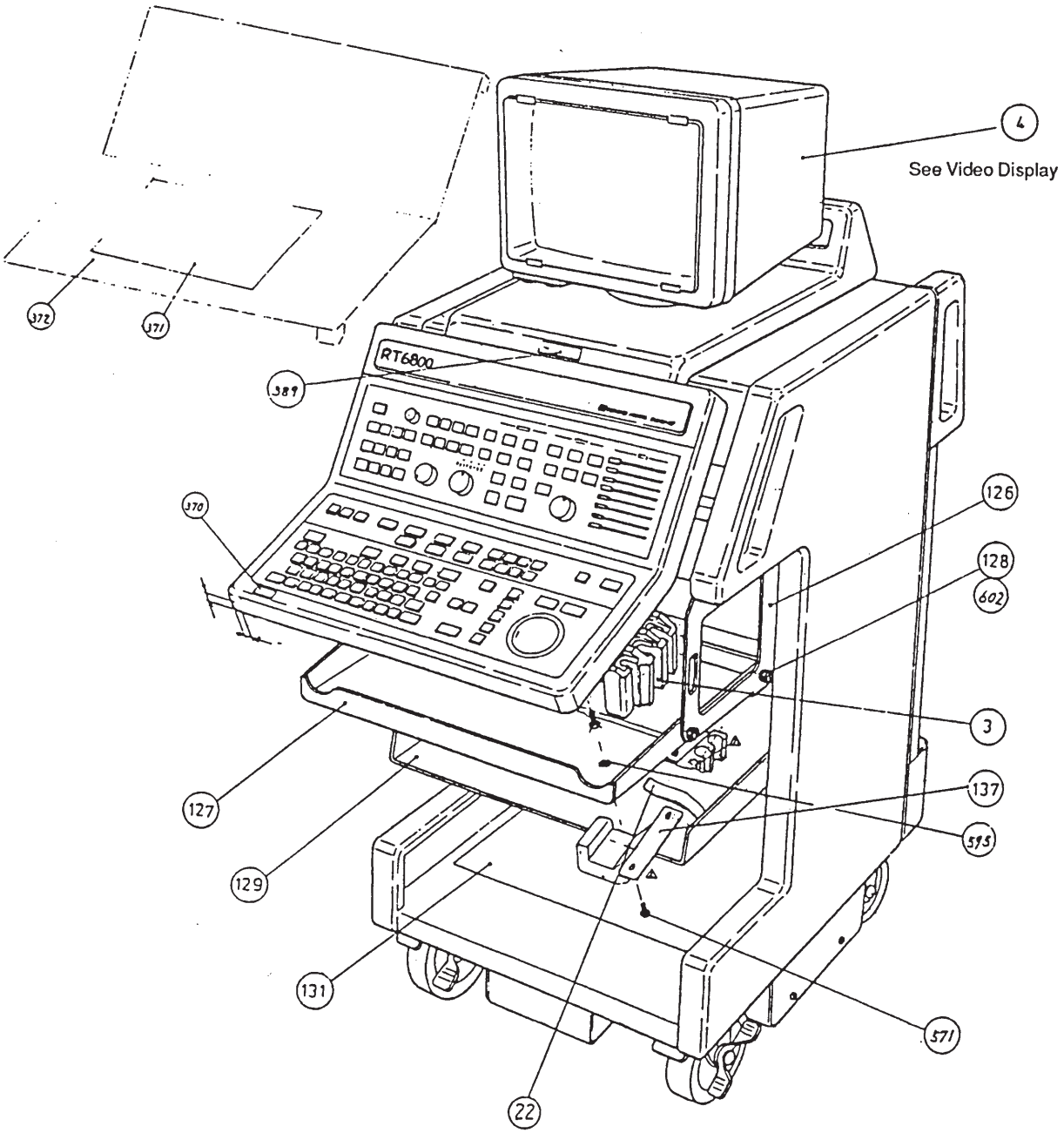

OPERATOR CSL ASSY 1/8 36 (Continued)

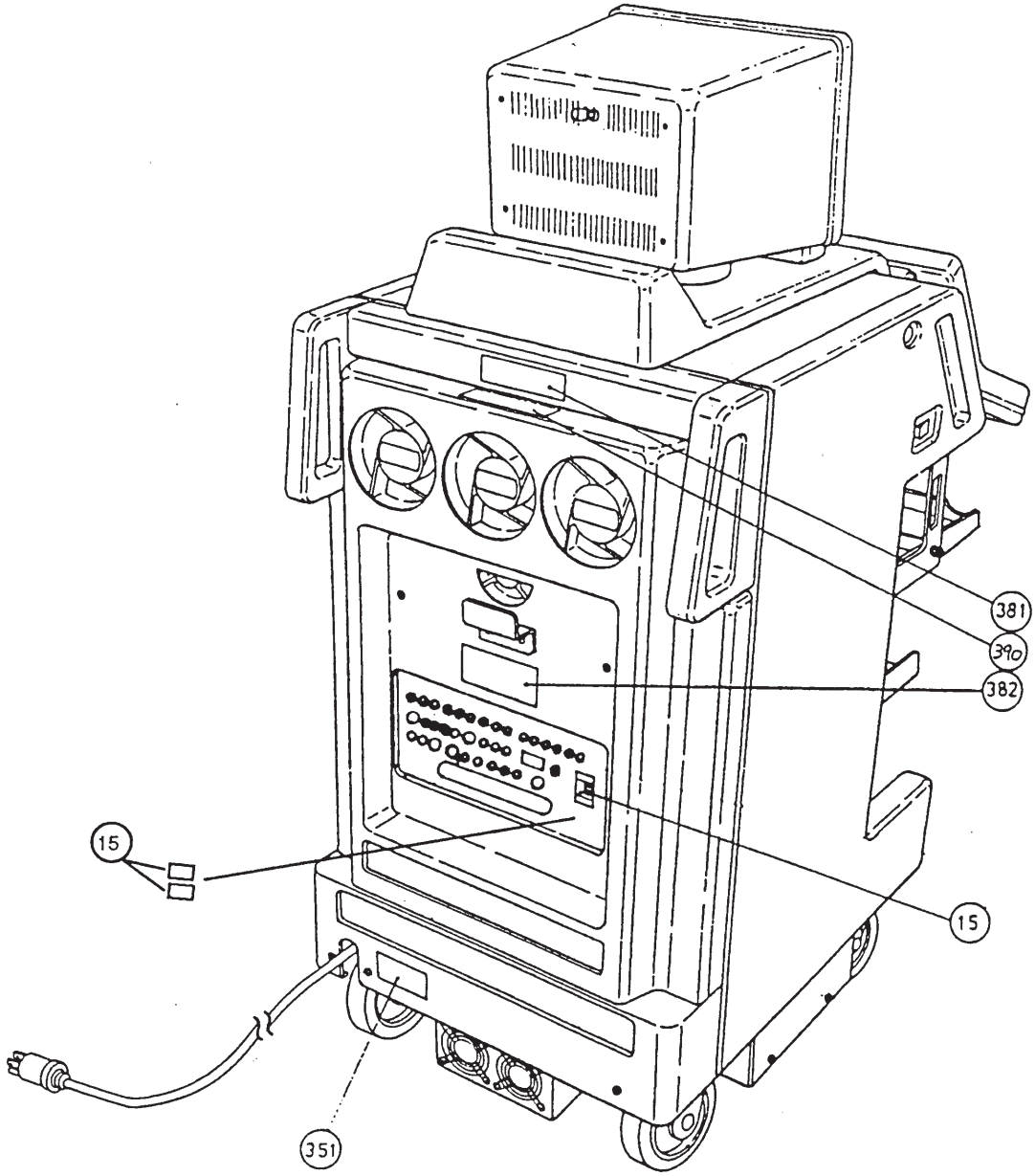

OPERATOR CSL ASSY 2/8 36

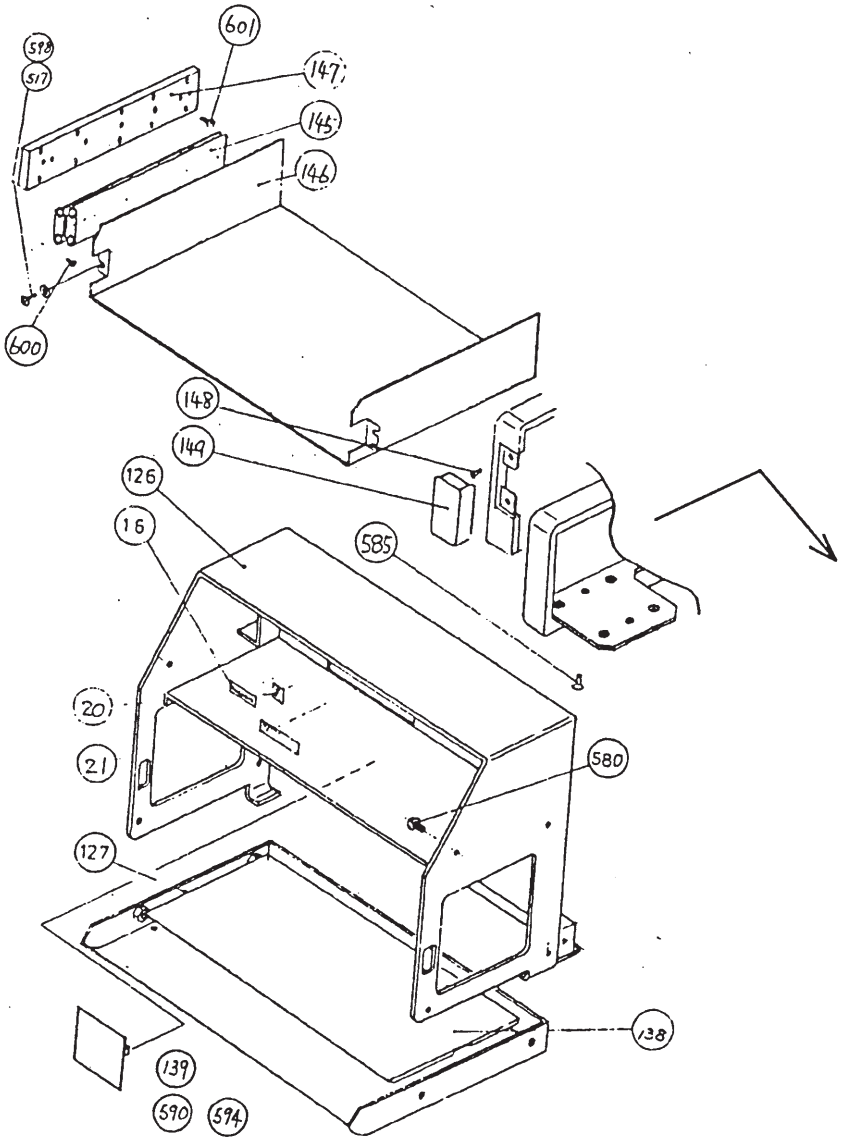

OPERATOR CSL ASSY 2/8 36 (Continued)

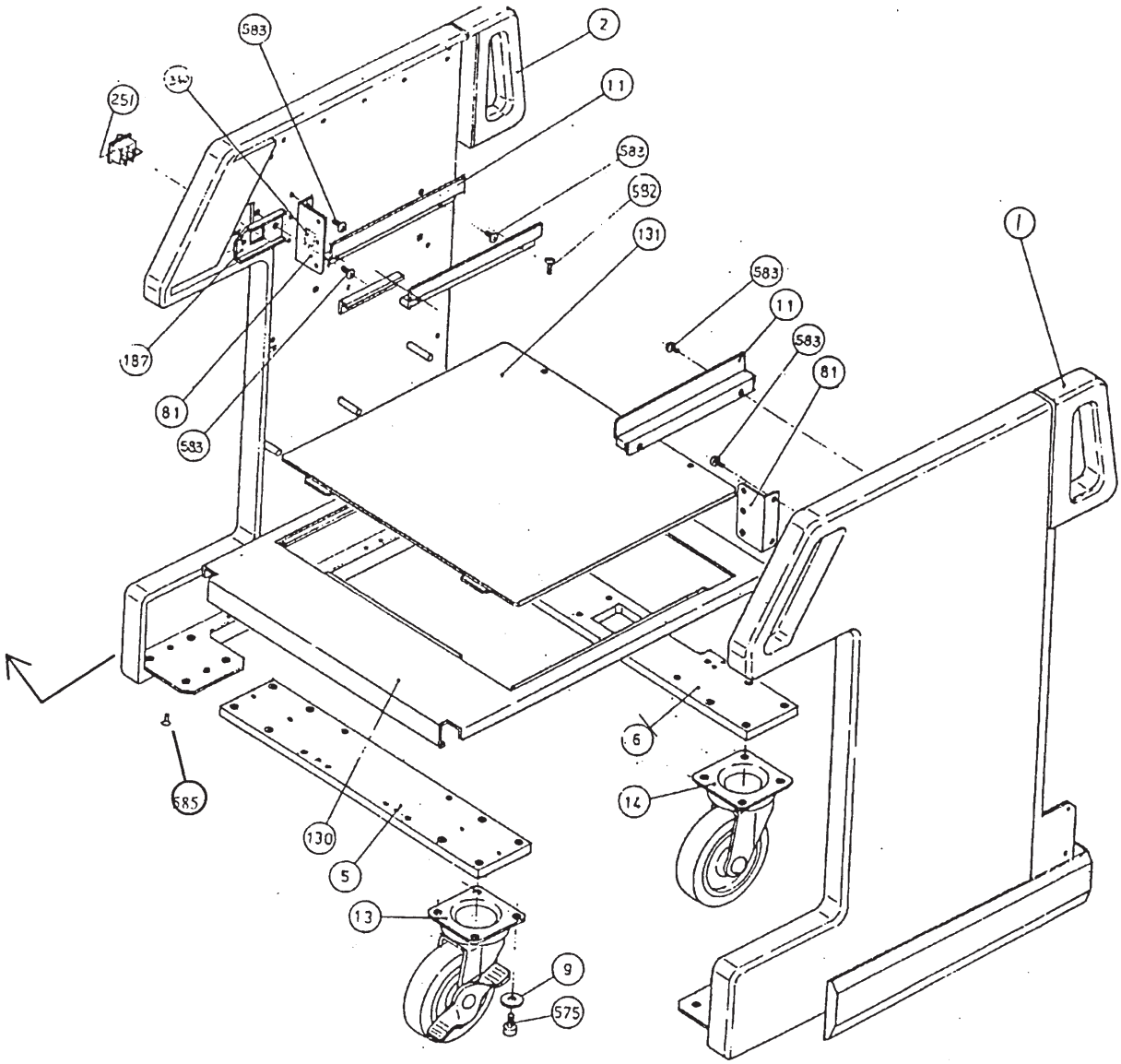

OPERATOR CSL ASSY 3/8 34

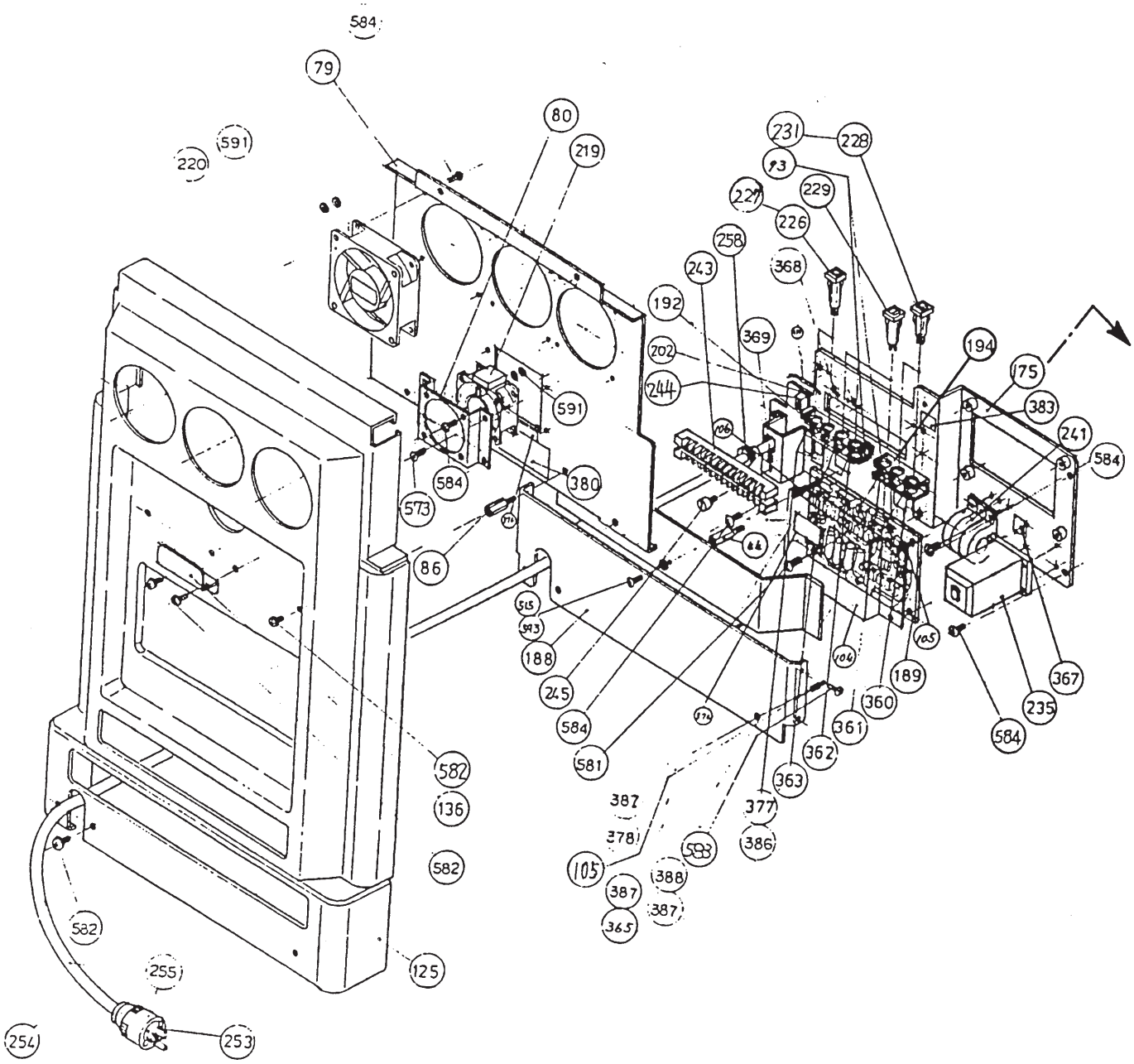

OPERATOR CSL ASSY 3/8 34 (Continued)

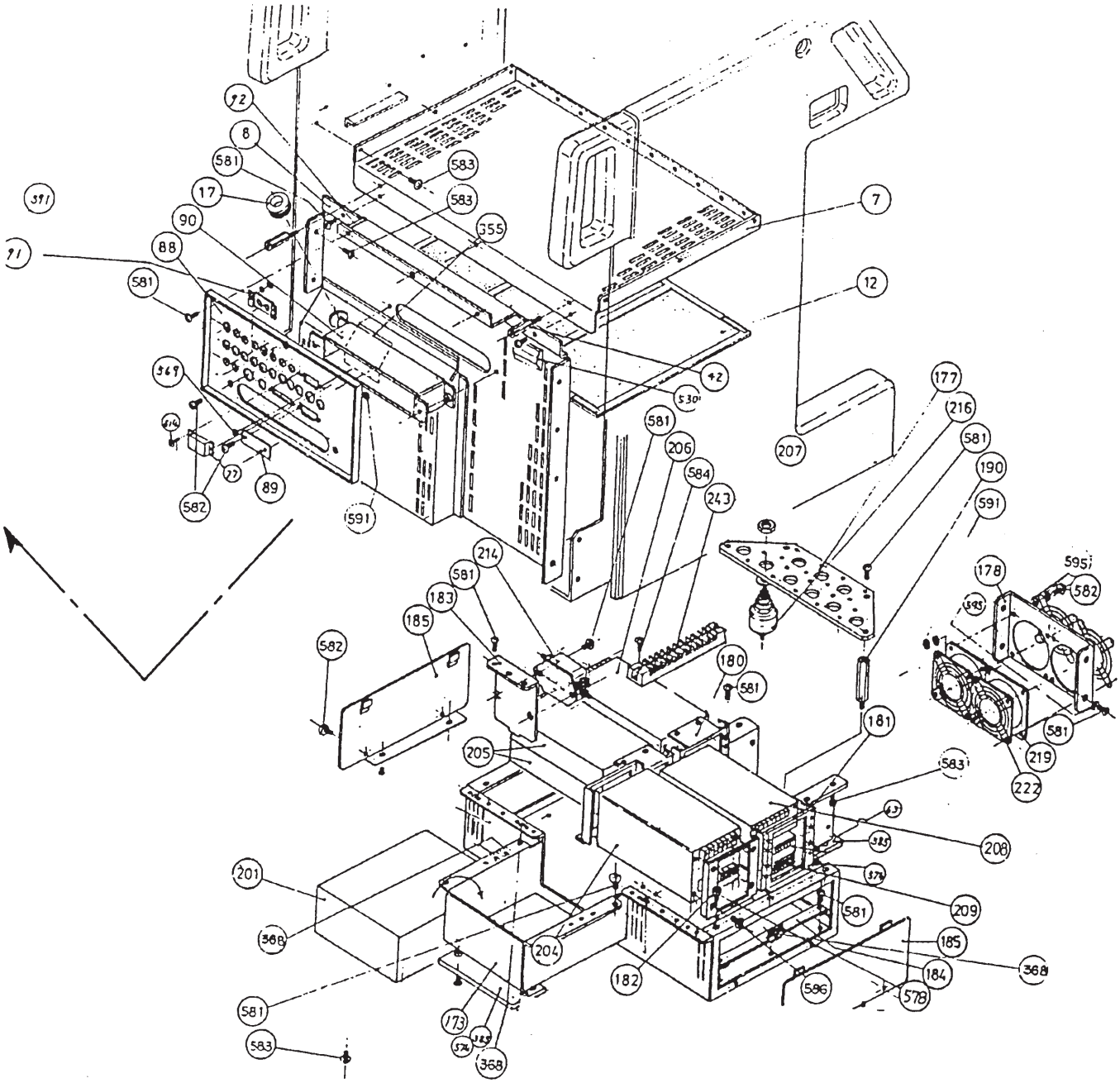

OPERATOR CSL ASSY 4/8 33

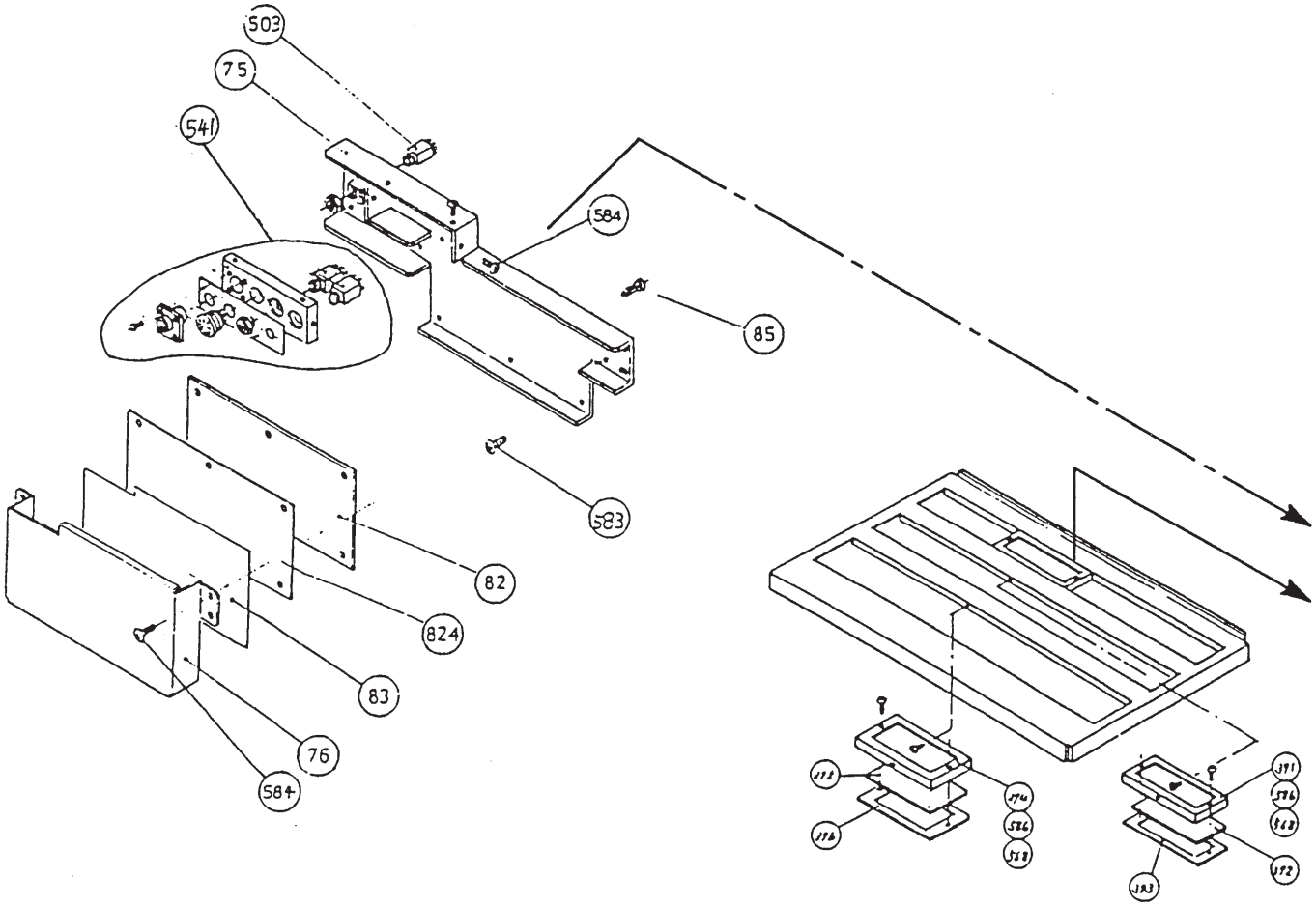

OPERATOR CSL ASSY 4/8 33 (Continued)

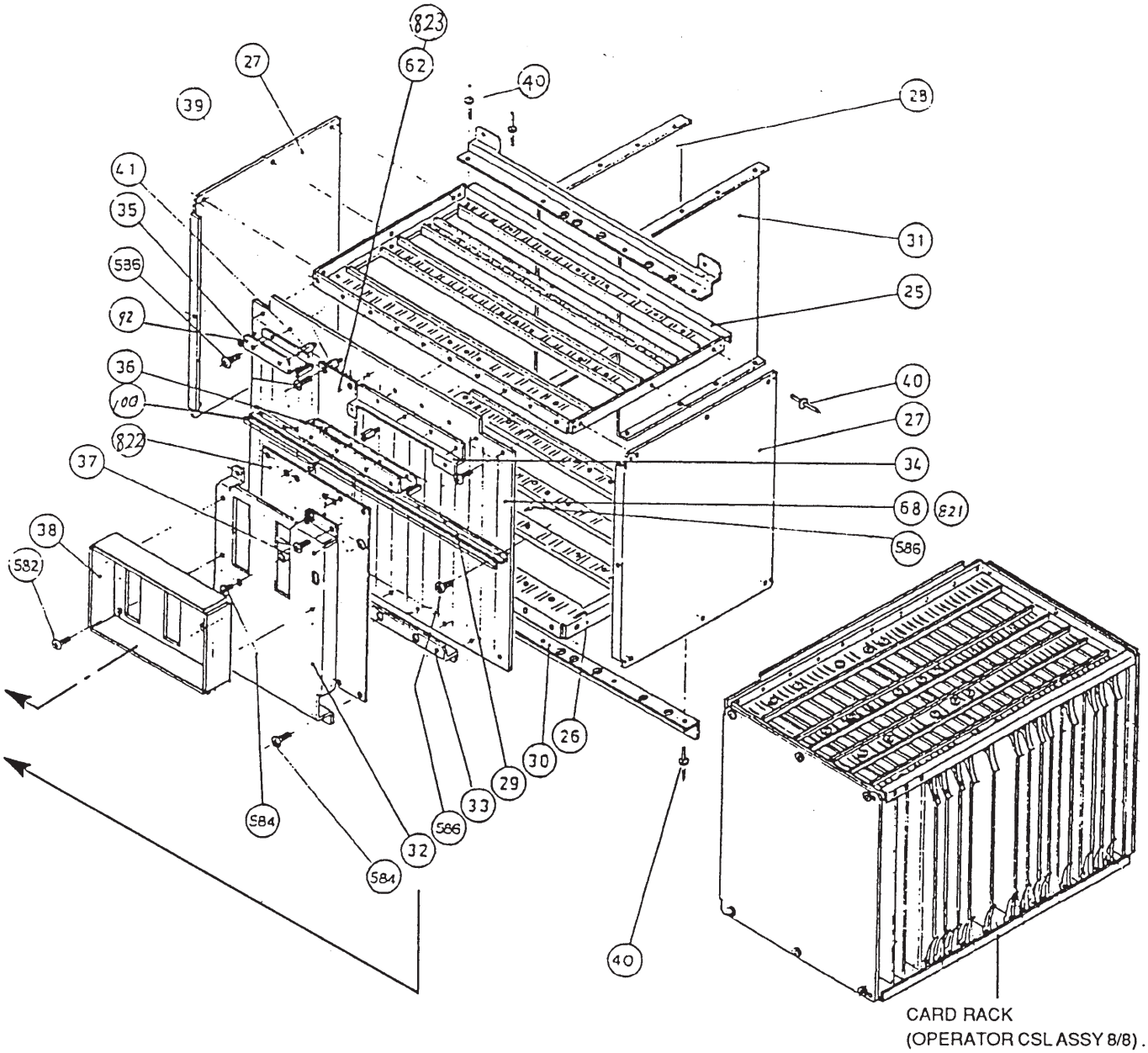

OPERATOR CSL ASSY 5/8 40

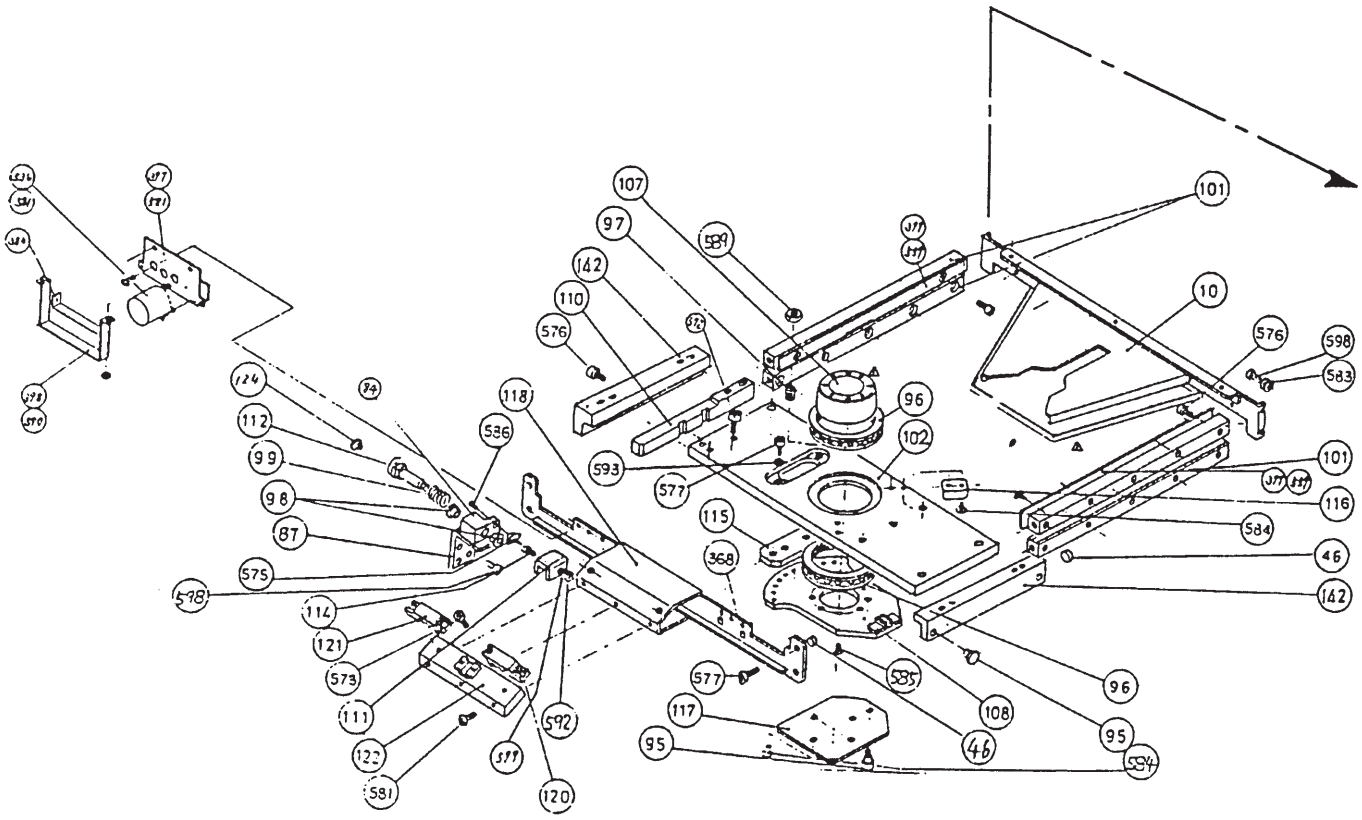

OPERATOR CSL ASSY 5/8 33 (Continued)

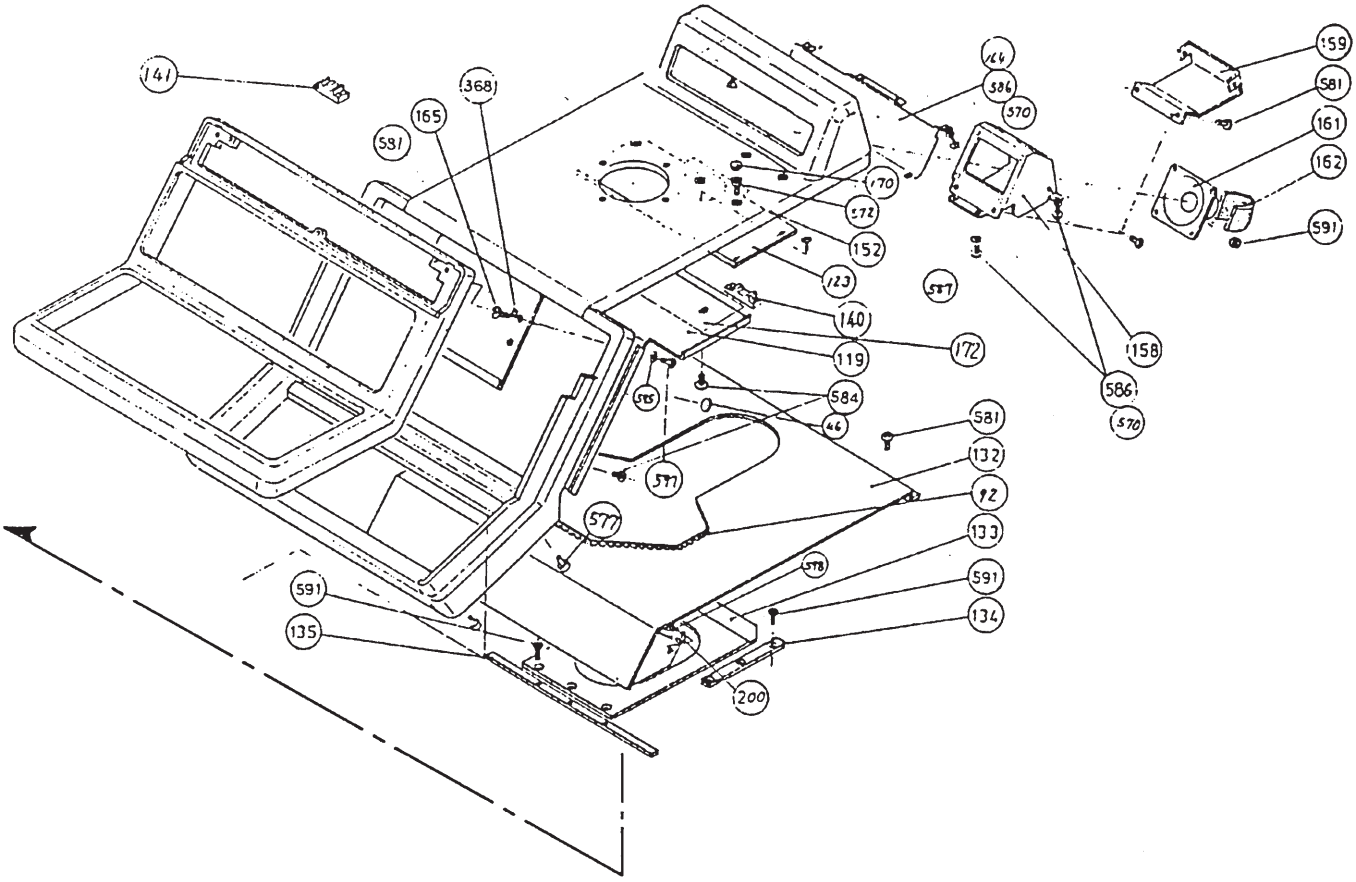

OPERATOR CSL ASSY 6/8 42

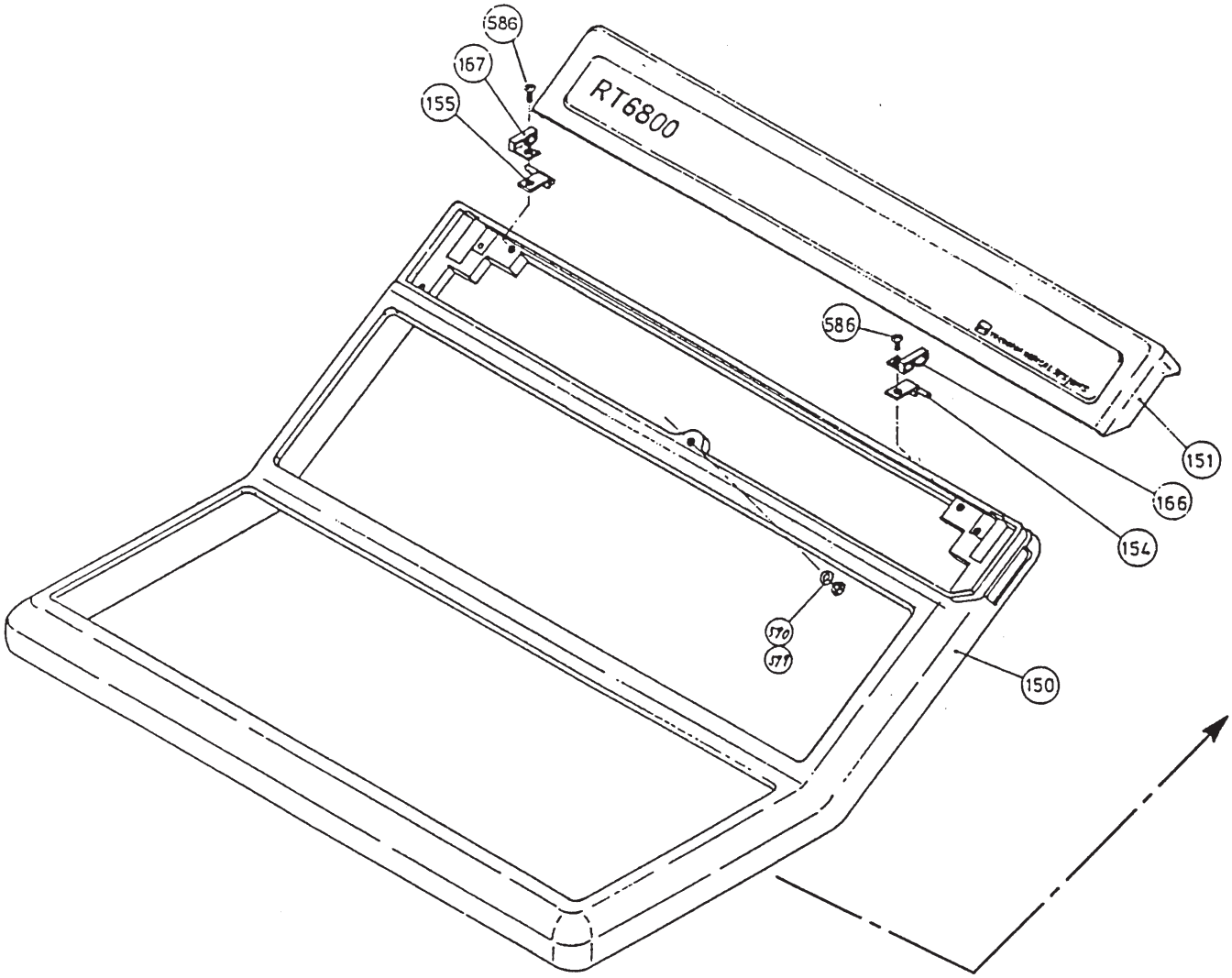

OPERATOR CSL ASSY 6/8 33 (Continued)

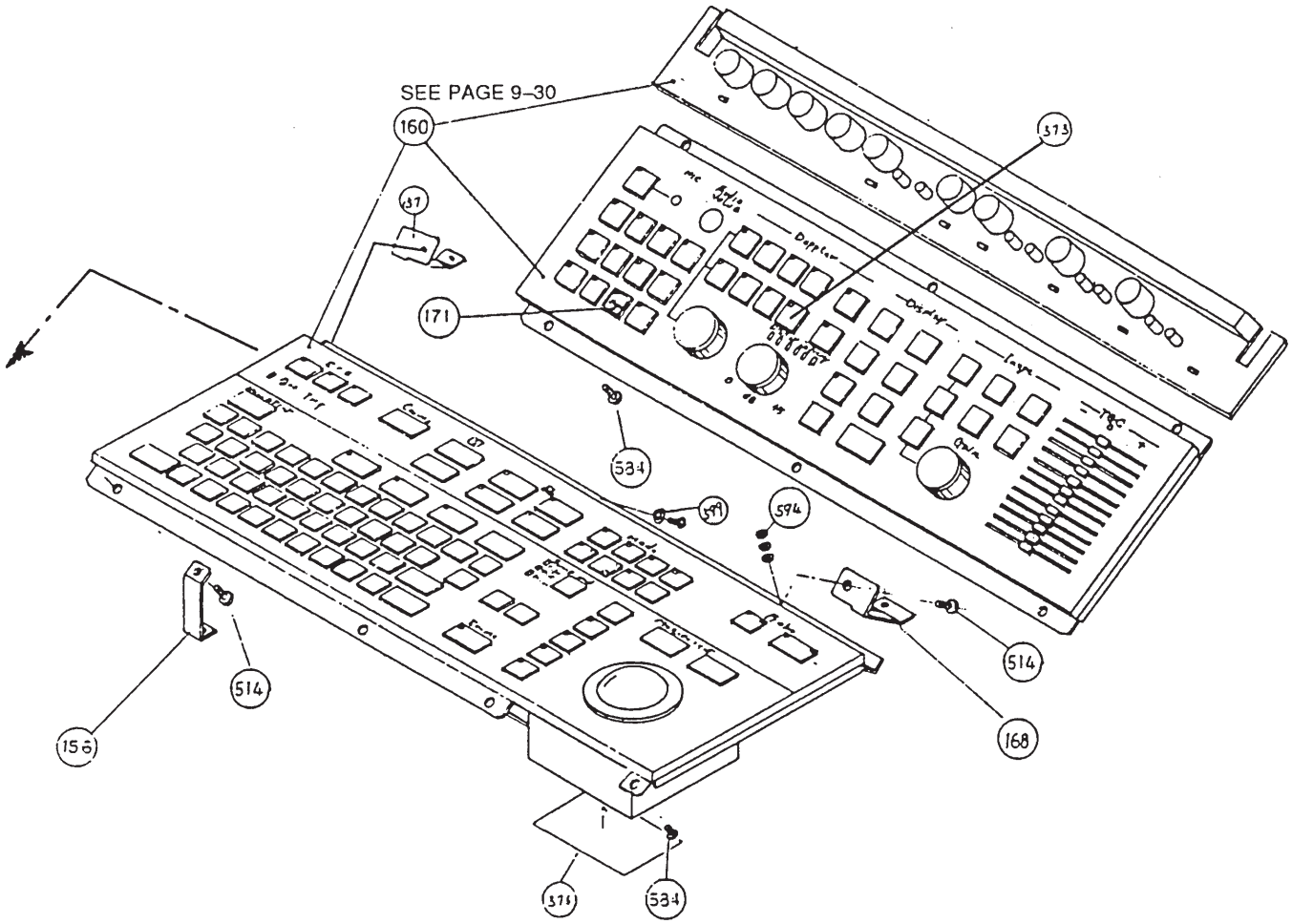

OPERATOR CSL ASSY 7/8 33

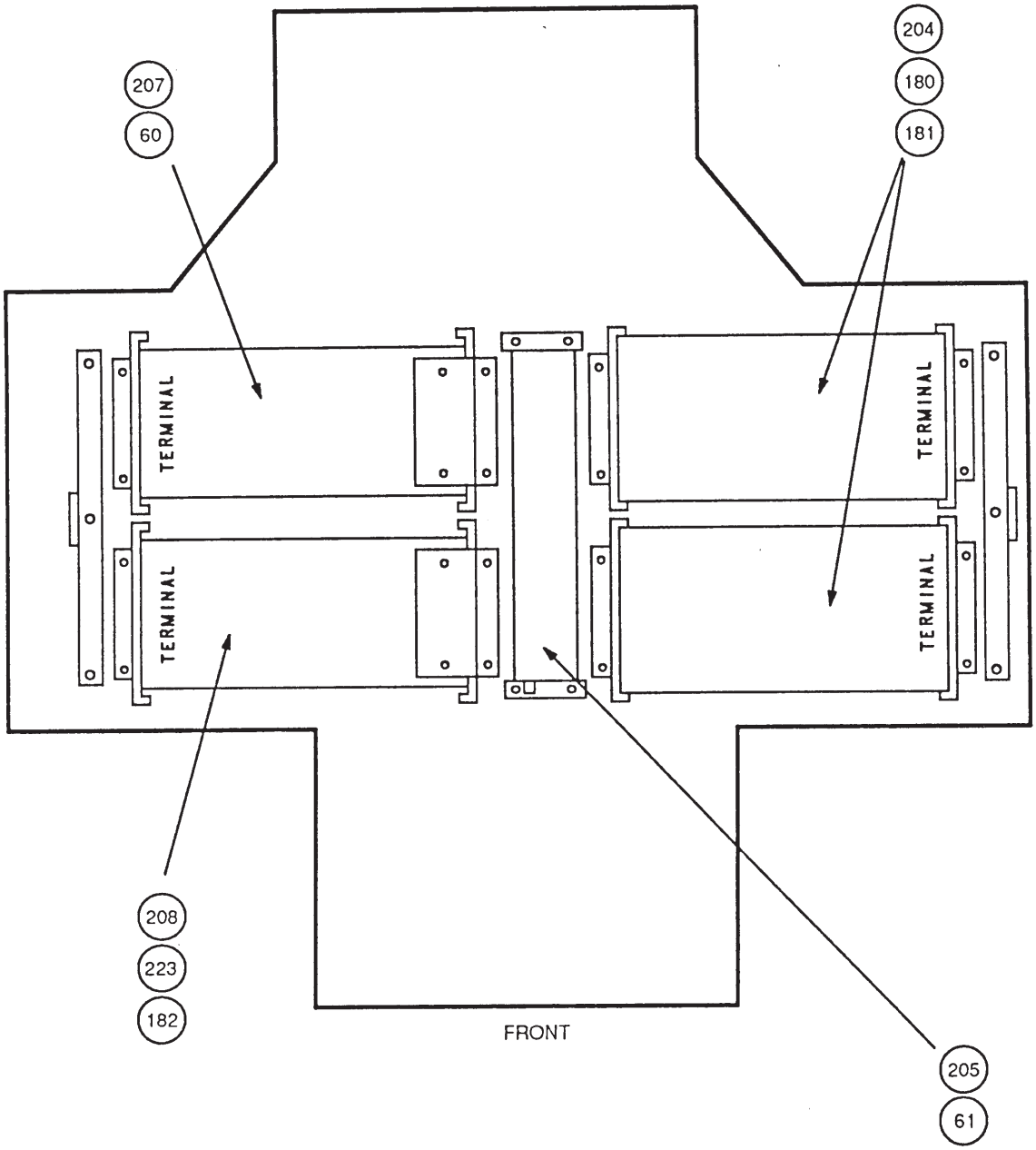

OPERATOR CSL ASSY 8/8 31

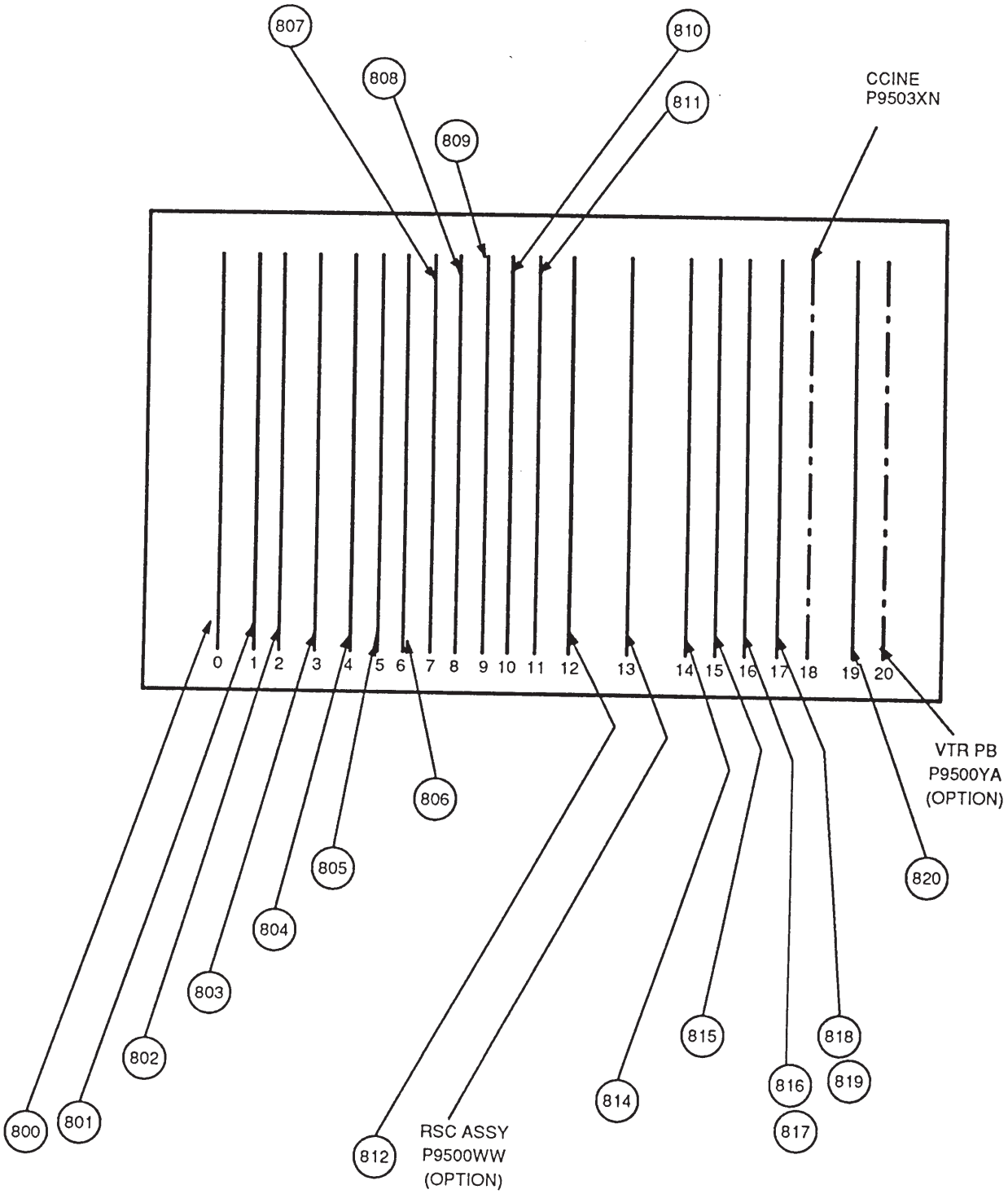

OPERATOR CSL ASSY
P9503AG, P9503AH, P9503AJ, P9503AN, P9503AK, P9503AL, P9503AM, P9503AP

MATERIAL LIST (1/13) 12

ITEM	PART NAME	PART NO.	QTY.	DESCRIPTION
1	SIDE FRAME R	P9500BU	1	
2	SIDE FRAME L	P9500BV	1	
3	PROBE HOLDER	P9500BL*	1	
4	COLOR MON ASSY	P9503LA	1	FOR P9503AG, AJ, AK, AM, See Video Display Monitor Assy
		P9503LB	1	FOR P9503AH, AN, AL, AP
5	BLOCK BASE FR	P9503EA	1	
6	BLOCK BASE BACK	P9503EB	1	
7	FRAME MDL	P9503EC	1	
8	FRAME BACK	P9503ED	1	
9	WASHER	P9500EE	16	
10	FRAME TOP	P9503EF	1	
11	DUCT SIDE	P9500FM*	4	
12	DUST FILTER	P9503FY	1	
13	CASTER	U0117AE*	2	
14	CASTER	U0118AE*	2	
15	RATING PLATE	P9500JY	1	FOR P9503AH, AL
		B9716FJ	1	FOR P9503AJ, AM
		P9503HJ	1	FOR P9503AN, AP
		P9503HK	1	FOR P9503AN, AP
16	NPL HEADPHONE	P9500HC	1	FOR AG, AH, AJ, AK, AL, AM, (NPL: Name Plate Label)
		P9503HV	1	FOR P9503AN, AP
17	BUSHING	U0529AC*	1	
20	NPL BF	P9500HX	1	FOR P9503AH, AJ, AN, AL, AM, AP
21	NAME PLATE G	P9500HZ	1	FOR P9503AH, AL
		P9503HN	1	FOR P9503AN, AP
22	BELT	P9503SK	1	

* : Refer to CROSS REFERENCE Table.

OPERATOR CSL ASSY
P9503AG, P9503AH, P9503AJ, P9503AN, P9503AK, P9503AL, P9503AM, P9503AP

MATERIAL LIST (2/13)

ITEM	PART NAME	PART NO.	QTY.	DESCRIPTION
25	NEST TOP	P9503FA	1	
26	NEST BASE	P9503FB	1	
27	NEST SIDE	P9500FC	2	
28	NEST SHEILD	P9500FD*	5	
29	BRKT SUPPORT	P9503FE	1	
30	NEST MTG BOT	P9503FF	1	
31	NEST MTG TOP	P9503FG	1	
32	CONN CASE	P9500FH*	1	
33	CONN BRKT BOT	P9500FJ	1	
34	CONN BRKT TOP	P9500FK*	1	
35	DUCT L	P9500FL	1	
36	DUCT R	P9500FX*	1	
37	SPACER CONN	P9500FR*	1	
38	CONN COVER	P9500FZ*	1	
39	STUD	U0093AG	4	
40	RIVET	U0508AG	60	
41	STUD	U0083AG	6	
42	STUD	P9503EE	2	
44	STUD	U0108AG	1	
46	DUMPER	U0122AE	7	
60	BRKT PS 4	P9503DN	2	
61	BRKT PS 5	P9503DP	2	
67	PSIA BD BRKT 2	P9503EZ	1	
75	PSIA BD CASE	P9503FN	1	
76	PSIA BD COVER	P9500FP	1	
79	FAN BRKT REAR	P9503FS	1	
80	FAN BRKT SMALL	P9500FT*	1	
81	PSIA BD BRKT	P9500FU*	1	
82	ISOLATE SHEET BOT	P9500FV*	1	
83	ISOLATE SHEET TOP	P9500FW*	1	

* : Refer to CROSS REFERENCE Table.

OPERATOR CSL ASSY
P9503AG, P9503AH, P9503AJ, P9503AN, P9503AK, P9503AL, P9503AM, P9503AP

MATERIAL LIST (3/13)

ITEM	PART NAME	PART NO.	QTY.	DESCRIPTION
84	STOP MAIN BLOCK	P9500EH	1	
85	SPACER	U0042AG*	6	
86	STUD	U0101AG	2	
87	STOP BRKT	P9500EJ	1	
88	REAR PANEL	P9503DU	1	
89	PLATE HIDE GP–IB	P9500DV	1	
90	CABLE DUCT	P9500DW*	1	
91	REAR CONN BRKT	P9500DX	1	
92	BUSHING	U0506AC	2	[m]
93	BUSHING	U0508AC*	2	[m]
95	BEARING	U0402AH	5	
96	THRUST BEARING	U0907AH*	2	
97	BALL PLUNGER	U0043AA	2	
98	FLANGE	U0910AH	2	
99	SPRING	U0003AQ*	1	
101	RAIL 1	P9500GB*	4	
102	PLATE	P9503GA	1	
104	HV COVER	P9500KN	1	
105	STUD	U0099AG	2	
106	STUD	U0107AG	2	
107	PIPE	P9500GH*	1	
108	LIMIT BRKT	P9500GJ*	1	
110	STOP BAR	P9500GL*	1	
111	STOP BRKT	P9500GM*	1	
112	PUSH BUTTON	P9500GN*	1	

2* : Refer to CROSS REFERENCE.

OPERATOR CSL ASSY
P9503AG, P9503AH, P9503AJ, P9503AN, P9503AK, P9503AL, P9503AM, P9503AP

MATERIAL LIST (4/13)

ITEM	PART NAME	PART NO.	QTY.	DESCRIPTION
114	STOP PIN	P9500GQ	1	
115	PLUNGER BLOCK	P9500GR*	1	
116	40° STOPPER	P9500GS	2	
117	20° STOPPER	P9500GT*	1	
118	CLAMP BRKT	P9503GU	1	
119	CABLE COVER	P9500GV	1	
121	CABLE CLAMP 2	P9500BP*	1	
122	CLAMP PLATE	P9500GX*	1	
123	TOP PLATE	P9500GY	1	
124	HEAD BUTTON	P9500GZ*	1	
125	REAR COVER	P9503EH	1	
126	FRONT COVER	P9503EM	1	
127	SHELF TOP	P9503EY	1	
128	SCREW SHELF	P9500EP*	4	
129	SHELF MDL	P9503EQ	1	
130	BASE PLATE	P9503ER	1	
131	BASE COVER	P9503ES	1	
132	TOP COVER	P9503ET	1	
133	HIDE COVER	P9500EU*	1	
134	HIDE COVER GUIDE	P9500EV*	1	
135	HIDE COVER LIMIT	P9500EW	1	
136	PWR CORD HOOK	P9500EX*	1	
137	CABLE HOOK	P9500BQ*	2	
138	RUBBER SHEET	P9503EX	1	
140	CABLE CLAMP 3	P9500BS*	1	

* : Refer to CROSS REFERENCE.

OPERATOR CSL ASSY
P9503AG, P9503AH, P9503AJ, P9503AN, P9503AK, P9503AL, P9503AM, P9503AP

MATERIAL LIST (5/13)

ITEM	PART NAME	PART NO.	QTY.	DESCRIPTION
141	CABLE CLAMP 4	P9500BT*	1	
142	SLIDE ANGLE	P9500EK	2	
145	SLIDE RAIL	U0312AE	2	FOR P9503AH, AJ, AL, AN, AM, AP
146	LSR CASE	P9503JC	1	FOR P9503AH, AJ, AL, AN, AM, AP
147	SLIDE BASE	P9500JD	2	FOR P9503AH, AJ, AL, AN, AM, AP
148	PIN	P9500JE	4	FOR P9503AH, AJ, AL,AN, AP AM
149	SLIDE CAP	P9500BW	2	
150	KB PANEL	P9500BB*	1	
151	SUB PANEL LID	P9503HC	1	FOR P9503AG
		P9500BC	1	FOR P9503AK
	SUB PANEL LID GE	P9503DM	1	FOR P9503AH, AJ, AN
		P9503DF	1	FOR P9503AL, AM, AP
152	SWING FRAME	P9500BJ*	1	
154	PANEL HINGE R	P9500CQ*	1	
155	PANEL HINGE L	P9500CR*	1	FOR P9503AG, AK
156	PANEL BRKT BOT	P9500CS*	3	FOR P9503AG, AK
157	PANEL BRKT MID	P9500CT*	1	
158	SPEAKER CASE	P9500CU*	2	
159	SPEAKER COVER	P9500CV	2	
160	KEY BOARD	P9503SA	1	See Key Board Assy
161	SPEAKER	P9500SE*	2	
162	FELT	B9718UL	2	250 x 145
163	MASK SCREW	P9500CM	1	
164	SPEAKER PLATE	P9500CW	1	
165	CABLE COVER 2	P9500GW*	1	
166	PANEL SPRING R	P9500CX*	1	
167	PANEL SPRING L	P9500CY*	1	

* : Refer to CROSS REFERENCE.

OPERATOR CSL ASSY
P9503AG, P9503AH, P9503AJ, P9503AN, P9503AK, P9503AL, P9503AM, P9503AP

MATERIAL LIST (6/13)

ITEM	PART NAME	PART NO.	QTY.	DESCRIPTION
168	PANL BRKT MID R	P9500CZ	1	
170	CAP	P9123PC	9	
171	NPL ZOOM	P9500HD	1	(NPL: Name Plate Label)
172	CABLE GUARD SHEET	P9500KP	1	
173	BOT CASE	P9503DT	1	
175	PS PLATE BACK	P9503DB	1	
177	PLATE PS FILTER	P9503DD	1	
178	PS FAN BRKT	P9503DE	1	
180	BRKT PS 1	P9503DG	4	
181	BRKT PS 2	P9503DH	2	
182	BRKT PS 3	P9503DJ	2	
183	BRKT PS FILTER	P9500DK*	1	
184	PLATE PS	P9503DL	2	
185	PS COVER BOT	P9500DM*	2	
187	PLATE POWER	P9500DP*	1	
188	PS COVER BACK	P9503DQ	1	
189	HV ASSY	P9500ZC*	1	
190	STUD	U0110AG*	5	
192	BUSHING	U0501AC	22	[cm]
194	BREAKER BRKT 2	P9500DS	1	
200	CLAMP	U0026AC	1	FOR P9503AG, AH, AJ
201	XFMR	P9500VZ*	1	TRANSFORMER
202	DISCON PLATE	P9500DZ	1	FOR P9503AH, AN, AL, AP
204	SW REGULATOR	U0236EE*	2	+5V 30A (PS0, PS1)
205	SW REGULATOR	U0237EE*	1	+5V 10A (PS2)

* : Refer to CROSS REFERENCE.

OPERATOR CSL ASSY
P9503AG, P9503AH, P9503AJ, P9503AN, P9503AK, P9503AL, P9503AM, P9503AP

MATERIAL LIST (7/13)

ITEM	PART NAME	PART NO.	QTY.	DESCRIPTION
207	SW REGULATOR	U0239EE*	2	+15V 4A (PS3), –15V 4A (PS4)
208	SW REGULATOR	U0249EE	1	–5V 20A (PS5)
214	NOISE FILTER	U0009EF*	1	
216	NOISE FILTER	U0103EF*	10	
219	FAN	U0503AM*	3	
220	FAN	U0504AM*	3	
222	FINGER GUARD	U0606AM*	4	
223	SW REGULATOR	U0252EE	1	+12V 2.5A (PS6)
226	PROTECTOR	U0024EK*	2	FOR P9503AH, AN, AL, AP
227	PROTECTOR	U0025EK*	2	FOR P9503AG, AJ, AK, AM
228	PROTECTOR	U0026EK*	2	FOR P9503AH, AN, AL, AP
229	PROTECTOR	U0027EK*	2	
235	RELAY	U2044MR	1	FOR P9503AH, AN, AL, AP
		U2047MR	1	FOR P9503AJ, AM
		U2046MR	1	FOR P9503AG, AK
241	CORE	U0002MC*	3	
243	TERMINAL	U0003FP*	2	
244	TERMINAL	U0108FP*	1	FOR P9503AH, AN, AL, AP
		U0020FP*	1	FOR P9503AG, AJ, AK, AM
245	TERMINAL	U0300FP	1	
251	SWITCH	U0018SS*	1	
253	PLUG	U0447FD*	1	FOR P9503AG, AJ, AK, AM
254	CORD	U0021WC*	4	FOR P9503AG, AJ, AK, AM

* : Refer to CROSS REFERENCE.

OPERATOR CSL ASSY
P9503AG, P9503AH, P9503AJ, P9503AN, P9503AK, P9503AL, P9503AM, P9503AP

MATERIAL LIST (8/13)

ITEM	PART NAME	PART NO.	QTY.	DESCRIPTION
255	CORD SET	U3001WD*	1	FOR P9503AH, AN, AL, AP
335	CS TERM	U0104FQ	1	FOR P9503AJ, AM
340	TIE WRAP BASE	U0212AC	1	
351	NPL PWR IN J	P9500HK	1	FOR P9503AG, AK (NPL: Name Plate Label)
	NPL PWR IN A	P9500HL	1	FOR P9503AJ, AM
	NPL PWR IN E	P9500HM	1	FOR P9503AH, AN, AL, AP
355	NPL OUTLET J	P9500HN	1	FOR P9503AG, AK (NPL: Name Plate Label)
	NPL OUTLET A	P9500HP	1	FOR P9503AJ, AM
	NPL OUTLET E	P9500HQ	1	FOR P9503AH, AN, AL, AP
360	NPL CP 0	P9500HS	2	(NPL: Name Plate Label)
361	NPL CP 1	P9500HT	1	(NPL: Name Plate Label)
362	NPL CP 2	P9500HU	2	(NPL: Name Plate Label)
363	NPL CP 3	P9500HV	2	(NPL: Name Plate Label)
365	NAMEPLATE	U0045BN	1	
367	NAMEPLATE	U0022BN	1	
368	NAMEPLATE	U0036BN	13	
369	NAMEPLATE	U0037BN	1	
370	NPL KB	P9500HE	1	FOR P9503AG, AK (NPL: Name Plate Label)
		P9500HF	1	FOR P9503AH, AJ, AN, AL, AM, AP
		P9500HP	1	FOR P9503AN, AP
		P9500HQ	1	FOR P9503AN, AP
371	NPL KB COVER	P9500HG	1	FOR P9503AG, AK (NPL: Name Plate Label)
		P9500HH	1	FOR P9503AH, AJ, AL, AM
		P9503HR	1	FOR P9503AN, AP

* : Refer to CROSS REFERENCE.

OPERATOR CSL ASSY
P9503AG, P9503AH, P9503AJ, P9503AN, P9503AK, P9503AL, P9503AM, P9503AP

MATERIAL LIST (9/13)

ITEM	PART NAME	PART NO.	QTY.	DESCRIPTION
372	KB COVER	P9500SL	1	
373	NPL THRESH	P9503HE	1	FOR P9503AG, AH, AJ, AK, AL, AM
376	NAMEPLATE	B9713EK	3	FOR P9503AJ, AM
377	NAMEPLATE	U0040BN	2	FOR P9503AG, AJ, AK, AM
378	NAMEPLATE	U0043BN	2	FOR P9503AH, AN, AL, AP
380	NAMEPLATE	B9716EA	1	
381	NAMEPLATE	B9716EC	1	FOR P9503AG, AJ, AK, AM
		B9716FZ	1	FOR P9503AH, AL
		P9503HT	1	FOR P9503AN, AP
382	NAMEPLATE	B9716ED	1	FOR P9503AG, AJ, AK, AM
		B9716FY	1	FOR P9503AH, AL
		P9503HU	1	FOR P9503AN, AP
383	NAMEPLATE	B9710DA	1	
384	BLIND TAPE	P9107SS	20	[cm]
386	NAMEPLATE	U0052BN	2	FOR P9503AH, AN, AL, AP
387	NAMEPLATE	U0053BN	2	
388	NAMEPLATE	U0054BN	2	FOR P9503AG, AJ, AK, AM
389	NAMEPLATE	U0093BN	1	FOR P9503AH, AJ, AN, AL, AM, AP
390	NAMEPLATE G	P9500JZ	1	FOR P9503AH, AL (IEC)
		P9503HS	1	FOR P9503AN, AP

* : Refer to CROSS REFERENCE.

OPERATOR CSL ASSY
P9503AG, P9503AH, P9503AJ, P9503AN, P9503AK, P9503AL, P9503AM, P9503AP

MATERIAL LIST (10/13)

ITEM	PART NAME	PART NO.	QTY.	DESCRIPTION
397	CAP BRACKET	P9500KW	1	
398	CAP SUPPORT	P9500KX	1	
399	PLATE SLIDE	P9500KY	2	
503	JACK	U0435FD	1	
514	SCREW	Y9410JS	3	
515	SCREW	Y9406LS	1	
516	SCREW	Y9410ZX	1	
517	WASHER	Y9518TM	4	
530	CLMP	U0019AC	1	
536	CAP : AL	U4010CA	2	
541	CONNECTOR ASSY	P9500RA	1	
559	SCREW	Y9308ES	4	
568	SCREW	Y9306ZX	6	
569	WASHER	Y9231WL	2	
570	WASHER	Y9301WS	8	
571	SCREW	Y9410LK	4	
572	SCREW	Y9614YX	8	
573	SCREW	Y9405ES	4	
574	SCREW	Y9508JS	4	
575	SCREW	U0080AA	1	
576	SCREW	Y9616YX	32	
577	SCREW	Y9510ZX	10	
578	SCREW	Y9408ZX	10	
580	SCREW	Y9508LK	6	
581	SCREW	Y9405JS	56	

* : Refer to CROSS REFERENCE.

OPERATOR CSL ASSY
P9503AG, P9503AH, P9503AJ, P9503AN, P9503AK, P9503AL, P9503AM, P9503AP

MATERIAL LIST (11/13)

ITEM	PART NAME	PART NO.	QTY.	DESCRIPTION
582	SCREW	Y9408LK	29	
583	SCREW	Y9505JS	32	
584	SCREW	Y9408JS	67	
585	SCREW	Y9408ES	13	
586	SCREW	Y9306JS*	98	
587	SCREW	Y9512ZX	8	
589	NUT	Y9101BS	2	
590	NUT	Y9401BS	5	
591	NUT	Y9301BS	2	
592	NUT	Y9601CS*	1	
593	WASHER	Y9500WS	13	
595	LOCK WASHER	Y9401WL*	16	FOR P9503AG, AH, AJ, AK, AL, AM
		Y9401WL*	27	FOR P9503AN, AP
596	WASHER	Y9600WS	4	
597	SCREW	Y9430LB	2	
598	SCREW	Y9508ZX*	8	
599	WASHER	Y9401WS	6	
600	SCREW	Y9306ES	28	FOR P9503AH, AJ, AN, AL, AM, AP
601	SCREW	Y9516ZX	20	FOR P9503AH, AJ, AN, AL, AM, AP

* : Refer to CROSS REFERENCE.

OPERATOR CSL ASSY
P9503AG, P9503AH, P9503AJ, P9503AN, P9503AK, P9503AL, P9503AM, P9503AP

MATERIAL LIST (12/13)

ITEM	PART NAME	PART NO.	QTY.	DESCRIPTION	
800	PSSA ASSY	P9500YU	1	FOR P9503ah, AJ, AM, AL Manufactured Prior to January	T3305AA**
	PSSA2 ASSY	P9503VA	1	FOR P9503AG, AJ, AK, AM	
	PSSA2–E ASSY	P9503VC	1	FOR P9503AH, AN, AL, AP	
801	AUDIO ASSY	P9503YV	1		
802	CDOP ASSY	P9503YE	1		
803	LOG ASSY	P9500WE	1	T3305A**	
804	XPSW ASSY	P9500XQ	1	T3305B**	
805	CDAF ASSY	P9500XS	1	T3305C**	
806	PDS ASSY	P9500YW	1		
807	TRA ASSY	P9500XN	1	T3305E**	
808	RTC ASSY	P9503QB	1		
809	MST2 ASSY	P9503YN	1	FOR P9503AG, AK	Version 2.00,2.01
	MST2–US ASSY	P9503YR	1	FOR P9503AJ, AM	Version 2.00,2.01
	MST2–EC ASSY	P9503YQ	1	FOR P9503AH, AL	Version 2.00,2.01
	MST3 ASSY	P9503YW	1	FOR P9503AG, AK	Version 3.00
	MST3–US ASSY	P9503YY	1	FOR P9503AJ, AM	Version 3.00
	MST3–EC ASSY	P9503YX	1	FOR P9503AH, AN, AL, AP	Version 3.00
810	IOP ASSY	P9500WU	1	T3305H**	
811	CFMP1 ASSY	P9503XS	1	FOR P9503AG, AH, AJ	
812	CFMP2 ASSY	P9503YU	1	FOR P9503AG, AH, AJ	
814	WD2 ASSY	P9500XY	1		
815	FFT ASSY	P9500YJ	1	T3305Z**	
816	FM3 ASSY	P9503XG	1	FOR P9503AJ, AM	
	FM3E ASSY	P9503YG	1	FOR P9503AH, AL, AN, AP	
	FM3C ASSY	P9503XY	1	FOR P9503AG, AK	
817	CMM ASSY	P9503XJ	1	FOR P9503AJ, AH, AN, AL, AM, AP	
	CMMC ASSY	P9503YJ	1	FOR P9503AG	

** : Refer to T3 NUMBERS.

OPERATOR CSL ASSY
P9503AG, P9503AH, P9503AJ, P9503AN, P9503AK, P9503AL, P9503AM, P9503AP

MATERIAL LIST (13/13)

ITEM	PART NAME	PART NO.	QTY.	DESCRIPTION
818	CSCC ASSY	P9503XC	1	
819	CBFM ASSY	P9503XE	1	
820	CVDO ASSY	P9503XL	1	FOR P9503AG, AJ, AK, AM
	CVDO–E ASSY	P9503YL	1	FOR P9503AH, AL, AN, AP
821	MOTHERBOARD ASSY	P9503YA	1	
822	CONN ASSY	P9500ZA	1	T3305T**
823	IOCON ASSY	P9500XA	1	T3305K**
824	PSIA ASSY	P9500YS	1	
–	RSC ASSY	P9500WW	1	
–	VTRPB ASSY	P9500YA	1	T3305AG**
–	CCINE ASSY	P9503XN	1	FOR P9503AG, AH, AN, AJ
–	NPL CINE	P9503HD	1	FOR P9503AG, AH, AN, AJ (NPL: Name Plate Label)
–	EXTENDER ASSY	P9500YY	1	

* * : Refer to T3 NUMBERS.

OPERATOR CSL ASSY
P9503AT, P9503AQ, P9503AR, P9503AS

MATERIAL LIST (1/19) 0

ITEM	PART NAME	PART NO.	QTY.	DESCRIPTION
1	SIDE FRAME R	P9500BU	1	
2	SIDE FRAME L	P9500BV	1	
3	PROBE HOLDER	P9500BL*	1	
4	COLOR MON ASSY	P9503LA	1	FOR P9503AT, AQ See Video Display Monitor Assy
	(PAL)	P9503LB	1	FOR P9503AR, AS See Video Display Monitor Assy
5	BLOCK BASE FR	P9503EA	1	
6	BLOCK BASE BACK	P9503EB	1	
7	FRAME MDL	P9503EC	1	
8	FRAME BACK	P9503ED	1	
9	WASHER	P9500EE	16	
10	FRAME TOP	P9503EF	1	
11	DUCT SIDE	P9500FM*	4	
12	DUST FILTER	P9503FY	1	
13	CASTER	U0117AE*	2	
14	CASTER	U0118AE*	2	
15	RATING PLATE	B9716FJ	1	FOR P9503AQ
	RATING PLATE France	P9503HH	1	FOR P9503AS
	RATING PLATE 2	P9503HJ	1	FOR P9503AR, AS
	RATING PLATE 3	P9503HK	1	FOR P9503AR, AS
16	NPL HEADPHONE	P9500HC	1	FOR P9503AT,AQ (NPL: Name Plate Label)
		P9503HV	1	FOR P9503AR, AS
17	BUSHING	U0529AC*	1	
20	NAME PLATE	P9500HX	1	FOR P9503AQ, AR, AS
21	NAME PLATE G1	P9500HN	1	FOR P9503AR, AS
22	BELT	P9503SK	1	

* : Refer to CROSS REFERENCE Table.

OPERATOR CSL ASSY
P9503AT, P9503AQ, P9503AR, P9503AS

MATERIAL LIST (2/19)

ITEM	PART NAME	PART NO.	QTY.	DESCRIPTION
25	NEST TOP	P9503FA	1	
26	NEST BASE	P9503FB	1	
27	NEST SIDE	P9500FC	2	
28	NEST SHEILD	P9500FD*	5	
29	BRKT SUPPORT	P9503FE	1	
30	NEST MTG BOT	P9503FF	1	
31	NEST MTG TOP	P9503FG	1	
32	CONN CASE	P9500FH*	1	
33	CONN BRKT BOT	P9500FJ	1	
34	CONN BRKT TOP	P9500FK*	1	
35	DUCT L	P9500FL	1	
36	DUCT R	P9500FX*	1	
37	SPACER CONN	P9500FR*	1	
38	CONN COVER	P9500FZ*	1	
39	STUD	U0093AG	4	
40	RIVET	U0508AG	60	
41	STUD	U0083AG	6	
42	STUD	P9303EE	2	
43	STUD	U0082AG	1	
44	STUD	U0108AG	1	
45	SHEET	P9103HV	4	
46	DUMPER	U0122AE	7	
47	CLAMP	U0026AC	1	
50	EDGING	U0507AC	3	
60	BRKT PS 4	P9503DN	2	

2* : Refer to CROSS REFERENCE.

OPERATOR CSL ASSY
P9503AT, P9503AQ, P9503AR, P9503AS

MATERIAL LIST (3/19)

ITEM	PART NAME	PART NO.	QTY.	DESCRIPTION
61	BRKT PS 5	P9503DP	2	
67	PSIA BD BRKT 2	P9503EZ	1	
75	PSIA BD CASE	P9503FN	1	
76	PSIA BD COVER	P9500FP	1	
79	FAN BRKT REAR	P9503FS	1	
80	FAN BRKT SMALL	P9500FT*	1	
81	PSIA BD BRKT	P9500FU*	1	
82	ISOLATE SHEET BOT	P9500FV*	1	
83	ISOLATE SHEET TOP	P9500FW*	1	
84	STOP MAIN BLOCK	P9500EH	1	
85	SPACER	U0042AG*	6	
86	STUD	U0101AG	2	
87	STOP BRKT	P9500EJ	1	
88	REAR PANEL	P9503DU	1	FORP9503AT, AQ, AR
		P9503DV	1	FOR P9503AS
89	PLATE HIDE GP–IB	P9500DV	1	
90	CABLE DUCT	P9500DW*	1	
91	REAR CONN BRKT	P9500DX	1	
92	EDGING	U0506AC	2	[m]
93	EDGING	U0508AC*	2	[m]
95	BEARING	U0402AH	5	
96	THRUST BEARING	U0907AH*	2	
97	BALL PLUNGER	U0043AA	2	
98	BEARING	U0910AH	2	
99	SPRING	U0003AQ*	1	
100	GUIDE	U0507AG	1	[m]

2* : Refer to CROSS REFERENCE Table.

OPERATOR CSL ASSY
P9503AT, P9503AQ, P9503AR, P9503AS

MATERIAL LIST (4/19)

ITEM	PART NAME	PART NO.	QTY.	DESCRIPTION
101	RAIL 1	P9500GB*	4	
102	PLATE	P9503GA	1	
104	HV COVER	P9500KN	1	
105	STUD	U0099AG	2	
106	STUD	U0107AG	2	
107	PIPE	P9500GH*	1	
108	LIMIT BRKT	P9500GJ*	1	
110	STOP BAR	P9500GL*	1	
111	STOP BRKT	P9500GM*	1	
112	PUSH BUTTON	P9500GN*	1	
114	STOP PIN	P9500GQ	1	
115	PLUNGER BLOCK	P9500GR*	1	
116	40° STOPPER	P9500GS	2	
117	20° STOPPER	P9500GT*	1	
118	CLAMP BRKT	P9503GU	1	
119	CABLE COVER	P9500GV	1	
120	CABLE CLAMP 1	P9503BN	1	
121	CABLE CLAMP 2	P9500BP*	1	
122	CLAMP PLATE	P9500GX*	1	
123	TOP PLATE	P9500GY	1	
124	HEAD BUTTON	P9500GZ*	1	
125	REAR COVER	P9503EH	1	
126	FRONT COVER	P9503FM	1	
127	SHELF TOP	P9503EY	1	
128	SCREW SHELF	P9500EP*	4	

* : Refer to CROSS REFERENCE Table.

OPERATOR CSL ASSY
P9503AT, P9503AQ, P9503AR, P9503AS

MATERIAL LIST (5/19)

ITEM	PART NAME	PART NO.	QTY.	DESCRIPTION
129	SHELF MDL	P9503EQ	1	
130	BASE PLATE	P9503ER	1	
131	BASE COVER	P9503ES	1	
132	TOP COVER	P9503ET	1	
133	HIDE COVER	P9500EU*	1	
134	HIDE COVER GUIDE	P9500EV*	1	
135	HIDE COVER LIMIT	P9500EW	1	
136	PWR CORD HOOK	P9500EX*	1	
137	CABLE HOOK	P9500BQ*	2	
138	RUBBER SHEET	P9503EX	1	
139	HOLE COVER	P9503EU	1	
140	CABLE CLAMP 3	P9500BS*	1	
41	CABLE CLAMP 4	P9500BT*	1	
142	SLIDE ANGLE	P9500EK	2	
143		U4555BA	15	[cm]
144	SILICON	U0300BD	5	[gram]
145	SLIDE RAIL	U0312AE	2	FOR P9503AQ, AR, AS
146	LSR CASE	P9503JC	1	FOR P9503AQ, AR, AS
147	SLIDE BASE	P9500JD	2	FOR P9503AQ, AR, AS
148	PIN	P9500JE	4	FOR P9503AQ, AR, AS
149	SLIDE CAP	P9500BW	2	
150	KB PANEL	P9500BB*	1	
151	SUB PANEL LID GE	P9503DM	1	FOR P9503AQ, AR, AS
		P9503HC	1	FOR P9503AT
152	SWING FRAME	P9500BJ*	1	
154	PANEL HINGE R	P9500CQ*	1	

* : Refer to CROSS REFERENCE Table.

OPERATOR CSL ASSY
P9503AT, P9503AQ, P9503AR, P9503AS

MATERIAL LIST (6/19)

ITEM	PART NAME	PART NO.	QTY.	DESCRIPTION
155	PANEL HINGE L	P9500CR*	1	FOR P9503AT
156	PANEL BRKT BOT	P9500CS*	3	FOR P9503AT
157	PANEL BRKT MID	P9500CT*	1	
158	SPEAKER CASE	P9500CU*	2	
159	SPEAKER COVER	P9500CV	2	
160	KEY BOARD	P9503SA	1	See Key Board Assy
161	SPEAKER	P9500SE	1	
162	FELT	B9718UL	1	
163	MASK SCREW	P9500CM	1	
164	SPEAKER PLATE	P9500CW	1	
165	CABLE COVER 2	P9500GW*	1	
166	PANEL SPRING R	P9500CX*	1	
167	PANEL SPRING L	P9500CY*	1	
168	PANL BRKT MID R	P9500CZ	1	
170	CAP	P9123PC	9	
171	NPL ZOOM	P9500HD	1	(NPL: Name Plate Label)
172	CABLE GUARD SHEET	P9500KP	1	
173	BOT CASE	P9503DT	1	
174	TUBE	U0534AC	20	[m]
175	PS PLATE BACK	P9503DB	1	
177	PLATE PS FILTER	P9503DD	1	
178	PS FAN BRKT	P9503DE	1	
180	BRKT PS 1	P9503DG	4	
181	BRKT PS 2	P9503DH	2	
182	BRKT PS 3	P9503DJ	2	
183	BRKT PS FILTER	P9500DK*	1	
184	PLATE PS	P9503DL	2	
185	PS COVER BOT	P9500DM*	2	

* : Refer to CROSS REFERENCE Table.

OPERATOR CSL ASSY
P9503AT, P9503AQ, P9503AR, P9503AS

MATERIAL LIST (7/19)

ITEM	PART NAME	PART NO.	QTY.	DESCRIPTION
187	PLATE POWER	P9500DP*	1	
188	PS COVER BACK	P9503DQ	1	
189	HV ASSY	P9500ZC*	1	
190	STUD	U0110AG*	5	
192	BUSHING	U0501AC	22	[cm]
193	BRACKER BRKT 1	P9500DR	1	
194	BREAKER BRKT 2	P9500DS	1	
195	BUS BAR 1	P9500KA	6	
196	BUS BAR 2	P9500KB	3	
197	BUS BAR 3	P9500KC	1	
198	BUS BAR 4	P9500KD	2	
199	BUS BAR 5	P9500KE	5	
200	CLAMP	U0026AC	1	
201	TRANSFORMER	P9500VZ*	1	
202	DISCON PLATE	P9500DZ	1	FOR P9503AH, AL
204	SW REGULATOR	U0236EE*	2	+5V 30A (PS0, PS1)
205	SW REGULATOR	U0237EE*	1	+5V 10A (PS2)
207	SW REGULATOR	U0239EE*	2	+15V 4A (PS3), –15V 4A (PS4)
208	SW REGULATOR	U0249EE	1	–5V 20A (PS5)
214	NOISE FILTER	U0009EF*	1	
216	NOISE FILTER	U0103EF*	10	
219	FAN	U0503AM*	3	
220	FAN	U0504AM*	3	
222	FINGER GUARD	U0606AM*	4	
223	SW REGULATOR	U0252EE	1	+12V 2.5A (PS6)

* : Refer to CROSS REFERENCE Table.

OPERATOR CSL ASSY
P9503AT, P9503AQ, P9503AR, P9503AS

MATERIAL LIST (8/19)

ITEM	PART NAME	PART NO.	QTY.	DESCRIPTION	
226	PROTECTOR	U0024EK*	2	FOR P9503AR, AS	
227	PROTECTOR	U0025EK*	2	FOR P9503AT, AQ	
228	PROTECTOR	U0026EK*	2	FOR P9503AR, AS	
229	PROTECTOR	U0027EK*	2		
231	PROTECTOR	U0029EK	2	FOR P9503AT, AQ	
235	RELAY	U2044MR	1	FOR P9503AR, AS	
		U2047MR	1	FOR P9030AQ	
		U2046MR	1	FOR P9503AT	
236	DIN RAIL	P9500UG	1		
237		U0040EK	1		
241	CORE	U0002MC*	3		
243	TERMINAL	U0003FP*	2		
244	TERMINAL	U0108FP*	1	FOR P9503AR, AS	
		U0020FP*	1	FOR P9503AT, AQ	
245	TERMINAL	U0300FP	1		
251	SWITCH	U0018SS*	1		
253	PLUG	U0447FD*	1	FOR P9503AT, AQ	
254	CORD	U0021WC*	4	FOR P9503AT, AQ	[m]
255	CORD SET	U3001WD*	1	FOR P9503AR, AS	
257	CORD STOPPER	U0549AC	1		
260		U6102FA	2		
264	PGB CBL ASSY	P9503RL	1	CN568	
265	CONNECTOR	U6202FA	1		
267	TUBE	U0405BA	2	[m]	
268	TUBE	U0406BA	2	[m]	
269	TUBE	U0447BA	1	[m]	
272	SOCKET	U6903FA	35		
273	PIN	U6904FA	2		

* : Refer to CROSS REFERENCE Table.

OPERATOR CSL ASSY
P9503AT, P9503AQ, P9503AR, P9503AS

MATERIAL LIST (19/19)

ITEM	PART NAME	PART NO.	QTY.	DESCRIPTION
–	Y/C CONNECTOR	P9506TC	2	CN565, CN563
–	CONNECTOR	U0469FD	1	CN562
276	CABLE	U0100WW	23	[m]
277	CABLE	U0102WW	2.5	[m]
278	CABLE	U0103WW	3.5	[m]
279	CABLE	U0104WW	2.5	[m]
280	CABLE	U0106WW	2.5	[m]
281	CABLE	U0107WW	2.5	[m]
282	CABLE	U0108WW	2.5	[m]
283	CABLE	U0110WW	4.5	[m]
284	CABLE	U0124WW	2.5	[m]
285	CABLE	U0131WW	5	[m]
286	CABLE	U0134WW	2.5	[m]
287	CABLE	U0136WW	4.5	[m]
288	CABLE	U0138WW	2.5	[m]
290	CABLE	U8009WW	2.5	[m]
291	CABLE	U8010WW	2.5	[m]
293	CABLE	U0200WW	14	[m]
294	CABLE	U0204WW	12	[m]
295	CABLE	U0206WW	2	[m]
301	CABLE	U0000WW	3	[m]
302	CABLE	U0002WW	3	[m]
304	CABLE	U0300WW	7	[m]
305	CABLE	U0302WW	1	[m]
306	CABLE	U0303WW	1.5	[m]

* : Refer to CROSS REFERENCE Table.

OPERATOR CSL ASSY
P9503AT, P9503AQ, P9503AR, P9503AS

MATERIAL LIST (10/19)

ITEM	PART NAME	PART NO.	QTY.	DESCRIPTION
307	CABLE	U0304WW	2.5	[m]
308	CABLE	U0306WW	2	[m]
326	CS TERM	U0002FQ	4	
327	CS TERM	U0105FQ	4	
328	CS TERM	U0108FQ	6	
329	CS TERM	U0113FQ	112	FOR P9503AT, AR, AS
			110	FOR P9503AQ
330	CS TERM	U0114FQ	8	
331	CS TERM	U0115FQ	12	
332	CS TERM	U0116FQ	10	
333	CS TERM	U0118FQ	8	
334	CS TERM	U0000FQ	4	
335	CS TERM	U0104FQ	1	FOR P9503AQ
336	CLAMP	U0201AC	25	
337	CLAMP	U0202AC	3	
340	TIE WRAP BASE	U0212AC	1	
342		U0207FQ	28	FOR P9503AT
343		U0202FQ	28	
344	TERMI CRIMP	U0201FQ	14	
351	NAME PLATE	P9500HK	1	FOR P9503AT
352	NAME PLATE	P9500HL	1	FOR P9503AQ
353	NAME PLATE	P9500HM	1	FOR P9503AR, AS
355	NAME PLATE	P9500HN	1	FOR P9503AT
356	NAME PLATE	P9500HP	1	FOR P9503AQ
357	NAME PLATE	P9500HQ	1	FOR P9503AR, AS
360	NPL CP 0	P9500HS	2	(NPL: Name Plate Label)

* : Refer to CROSS REFERENCE Table.

OPERATOR CSL ASSY
P9503AT, P9503AQ, P9503AR, P9503AS

MATERIAL LIST (11/19)

ITEM	PART NAME	PART NO.	QTY.	DESCRIPTION
361	NPL CP 1	P9500HT	1	
362	NPL CP 2	P9500HU	2	
363	NPL CP 3	P9500HV	2	
365	NAMEPLATE	U0045BN	1	
367	NAMEPLATE	U0022BN	1	FOR P9503AT, AQ
			2	FOR P9503AR, AS
368	NAMEPLATE	U0036BN	13	
369	NAMEPLATE	U0037BN	1	FOR P9503AT, AQ
370	NPL KB	P9500HE	1	FOR P9503AT (NPL: Name Plate Label)
		P9500HF	1	FOR P9503AQ, AR, AS
		P9503HP	1	FOR P9503AR, AS
		P9503HQ	1	FOR P9503AR, AS
371	NPL KB COVER	P9500HG	1	FOR P9503AT
		P9500HH	1	FOR P9503AQ
		P9503HR	1	FOR P9503AR, AS
372	KB COVER	P9500SL	1	
373	NPL THRESH	P9503HE	1	
376	NAMEPLATE	B9713EK	3	FOR P9503AQ
377	NAMEPLATE	U0040BN	2	FOR P9503AT, AQ
378	NAMEPLATE	U0043BN	2	FOR P9503AR, AS
380	NAMEPLATE	B9716EA	1	
381	NAMEPLATE	B9716EC	1	FOR P9503AT, AQ
		P9503HT	1	FOR P9503AR, AS
382	NAMEPLATE	B9716ED	1	FOR P9503AT,AQ
		P9503HU	1	FOR P9503AR, AS
383	NAMEPLATE	B9710DA	1	
384	BLIND TAPE	P9107SS	20	[cm]
386	NAMEPLATE	U0052BN	2	FOR P9503AR, AS

* : Refer to CROSS REFERENCE Table.

OPERATOR CSL ASSY
P9503AT, P9503AQ, P9503AR, P9503AS

MATERIAL LIST (12/19)

ITEM	PART NAME	PART NO.	QTY.	DESCRIPTION
387	NAMEPLATE	U0053BN	2	
388	NAMEPLATE	U0054BN	2	FOR P9503AT, AQ
389	NAMEPLATE	U0093BN	1	FOR P9503AQ, AR, AS
390	NAMEPLATE G	P9503HS	1	FOR P9503AR, AS
397	CAP BRACKET	P9500KW	1	
398	CAP SUPPORT	P9500KX	1	
399	PLATE SLIDE	P9500KY	2	
400	CABLE ASSY	P9500VF	1	CN05, CN36
401	CABLE ASSY	P9500VF	1	CN06, CN37
402	CABLE ASSY	P9500VG	1	CN07
403	CABLE ASSY	P9500VF	1	CN508, CN29
404	CABLE ASSY	P9500VG	1	CN09
405	CABLE ASSY	P9500VG	1	CN10
406	CABLE ASSY	P9500VE	1	CN517, CN513
407	CABLE ASSY	P9500VG	1	CN12
408	CABLE ASSY	P9500VE	1	CN514, CN518
410	CABLE ASSY	P9500VG	1	CN14
411	CABLE ASSY	P9500VG	1	CN15
412	CABLE ASSY	P9500VG	1	CN16
413	CABLE ASSY	P9500VG	1	CN17
414	CABLE ASSY	P9500VE	1	CN18, CN19
416	CABLE ASSY	P9500VD	1	CN24, CN31
418		U4204FA	1	
419	CABLE ASSY	P9500VD	1	CN501, CN515
420	CABLE ASSY	P9500VD	1	CN502, CN516
425	CABLE ASSY	P9500VG	1	CN33, CN34

* : Refer to CROSS REFERENCE Table.

OPERATOR CSL ASSY
P9503AT, P9503AQ, P9503AR, P9503AS

MATERIAL LIST (13/19)

ITEM	PART NAME	PART NO.	QTY.	DESCRIPTION
426	CONNECTOR	U4206FA	1	CN35, CN38, CN39, CM41
428	CABLE ASSY	P9500VK	1	CN43
429	CABLE ASSY	P9500VJ	1	CN44
430	CABLE ASSY	P9500VL	1	CN45
434	CABLE ASSY	P9500VH	1	CN50, CN110
436	CONNECTOR	U4215FA	1	CN55,
437	CONNECTOR	U4210FA	1	CN56
439	CABLE ASSY	P9500VG	1	CN57
443	CONNECTOR	U1326FA	1	CN60
461	CONNECTOR	U4208FA	1	CN106
475	BNC CONNECTOR	U1013FD	1	CN200
476	PIN JACK	U0434FD	3	CN201, CN202, CN203
477	BNC CONNECTOR	U1013FD	1	CN204
478	PIN JACK	U0434FD	3	CN205,CN206, CN207
479	CONNECTOR	U0450FD	1	CN208
480	BLACKET	U0919FD	1	CN208
481	BNC CONNECTOR	U1013FD	9	CN209~CN217
484		U0403FD	1	CN218
485	BNC CONNECTOR	U1013FD	1	CN219
486	PHONE JACK	U0435FD	2	CN220, CN221
487		U0403FD	1	CN222
488	BNC CONNECTOR	U1013FD	1	CN223
489	CONNECTOR	U0100FD	1	CN224
490	LOCK POST	U0904FD	2	CN224
492	PLATE	B9713GN	24	

* : Refer to CROSS REFERENCE Table.

OPERATOR CSL ASSY
P9503AT, P9503AQ, P9503AR, P9503AS

MATERIAL LIST (14/19)

ITEM	PART NAME	PART NO.	QTY.	DESCRIPTION
493	PLATE	B9686JG	2	
494	SPACER	B9713DS	6	
495	WASHER	Y9601WL	6	
496	BNC CONNECTOR	U1013FD	11	
503	JACK	U0435FD	1	CN234
505	CONNECTOR	U0445FD	1	CN107
514	SCREW	Y9410JS	3	
515	SCREW	Y9406LS	1	
516	SCREW	Y9410ZX	1	
517	WASHER	Y9518TM	4	
518	SCREW	Y9306LK	2	
519	SCREW	Y9405JS	1	
525	SHIELD CABLE	U000WC	30	[m]
527	FLAT CABLE	U0005WF	2.5	[m]
528	CLAMP	U0015AC	1	FOR P9503AQ
529	CLAMP	U0016AC	10	
530	CLAMP	U0019AC	1	
531	TUBE	U0442BA	2	[m]
532	TUBE	U0443BA	2	[m]
533	TUBE	U0405BA	2	[m]
534	TUBE	U0412BA	0.5	[m]
535	TUBE	U0406BA	0.5	[m]
536	CAP : AL	U4010CA	2	
538	FERIC CORE	U0003MC	5	
539	FERIC CORE	U0003MC	4	

* : Refer to CROSS REFERENCE Table.

OPERATOR CSL ASSY
P9503AT, P9503AQ, P9503AR, P9503AS

MATERIAL LIST (15/19)

ITEM	PART NAME	PART NO.	QTY.	DESCRIPTION	
540		U0201AC	1		
541	CABLE ASSY A	P9500RA	1	CN230, CN233, CN132, CN135	
542	CABLE ASSY B	P9500RB	1	CN13, CN42	
543	CABLE ASSY C	P9500RC	1	CN03, CN42	
544	CABLE ASSY D	P9500RD	1	CN46, CN131	
545	CABLE ASSY E	P9500RE	1	CN28, CN134	
546	CABLE ASSY F	P9500RF	1	CN121, CN140	
547	CABLE ASSY CG	P9503RA	1	CN59, CN125	
548	CABLE ASSY H	P9500RH	1	CN02, CN110	
549	CABLE ASSY RK	P9503RK	1	CN170	
550	CABLE	U1000WW	8	[m]	Black
551	CABLE	U1001WW	2	[m]	brown
552	CABLE	U1002WW	2	[m]	Red
553	CABLE	U1003WW	2	[m]	Orange
554	CABLE	U1004WW	2	[m]	Yellow
555	CABLE	U1005WW	2		
556	CABLE	U1006WW	2	[m]	Blue
557	CABLE	U1007WW	2	[m]	Purple
558	CABLE	U1008WW	2	[m]	Gray
559	SCREW	Y9308ES	4		
560	CABLE	U2000WW	2	[m]	Black
561	CABLE	U2001WW	2	[m]	brown
562	CABLE	U2002WW	2	[m]	Red
563	CABLE	U2003WW	2	[m]	Orange
564	CABLE	U2004WW	2	[m]	Yellow

* : Refer to CROSS REFERENCE Table.

OPERATOR CSL ASSY
P9503AT, P9503AQ, P9503AR, P9503AS

MATERIAL LIST (16/19)

ITEM	PART NAME	PART NO.	QTY.	DESCRIPTION	
565	CABLE	U2006WW	2	[m]	Blue
566	CABLE	U2007WW	2	[m]	Purple
567	CABLE	U2009WW	2	[m]	White
568	SCREW	Y9306ZX	6		
569	WASHER	Y9231WL	2		
570	WASHER	Y9301WS	8		
571	SCREW	Y9410LK	4		
572	SCREW	Y9614YX	8		
573	SCREW	Y9405ES	4		
574	SCREW	Y9508JS	4		
575	SCREW	U0080AA	1		
576	SCREW	Y9616YX	32		
577	SCREW	Y9510ZX	10		
578	SCREW	Y9408ZX	10		
579	SCREW	Y9414ZX	10		
580	SCREW	Y9508LK	6		
581	SCREW	Y9405JS	56		
582	SCREW	Y9408LK	29		
583	SCREW	Y9505JS	32		
584	SCREW	Y9408JS	67		
585	SCREW	Y9408ES	13		
586	SCREW	Y9306JS*	98		
587	SCREW	Y9512ZX	8		
589	NUT	Y9101BS	2		
590	NUT	Y9401BS	5		

* : Refer to CROSS REFERENCE Table.

OPERATOR CSL ASSY
P9503AT, P9503AQ, P9503AR, P9503AS

MATERIAL LIST (27/19)

ITEM	PART NAME	PART NO.	QTY.	DESCRIPTION
591	NUT	Y9301BS	2	
592	NUT	Y9601CS*	1	
593	WASHER	Y9500WS	13	
594	WASHER	Y9400WS	22	
595	LOCK WASHER	Y9401WL*	16	FOR P9503AT, AQ
		Y9401WL*	27	FOR P9503AR, AS
596	WASHER	Y9600WS	4	
597	SCREW	Y9430LB	2	
598	SCREW	Y9508ZX*	8	
599	WASHER	Y9401WS	6	
600	SCREW	Y9306ES	28	FOR P9503AQ, AR, AS
601	SCREW	Y9516ZX	20	FOR P9503AQ, AR, AS
602	WASHER	Y9501WL	4	
603	FERRITE CORE	U0010MC	2	

** : Refer to T3 NUMBERS Table.

OPERATOR CSL ASSY
P9503AT, P9503AQ, P9503AR, P9503AS

MATERIAL LIST (18/19)

ITEM	PART NAME	PART NO.	QTY.	DESCRIPTION
800	PSSA2 ASSY	P9503VA	1	FOR P9503AT, AQ
	PSSA2–E ASSY	P9503VC	1	FOR P9503AR, AS
801	AUDIO ASSY	P9503YV	1	
802	CDOP ASSY	P9503YE	1	
803	LOG ASSY	P9500WE	1	T3305A**
804	XPSW ASSY	P9500XQ	1	T3305B**
805	CDAF ASSY	P9500XS	1	T3305C**
806	PDS ASSY	P9500YW	1	
807	TRA ASSY	P9500XN	1	T3305E**
808	RTC ASSY	P9503QB	1	
809	MST4 ASSY	P9503ZA	1	FOR P9503AT
	MST4–US ASSY	P9503ZC	1	FOR P9503AQ
	MST4–EC ASSY	P9503ZB	1	FOR P9503AR
	MST4–FR ASSY	P9503ZD	1	FOR P9503AS
810	IOP ASSY	P9500WU	1	T3305H**
811	CFMP1 ASSY	P9503XS	1	FOR P9503
812	CFMP2 ASSY	P9503YU	1	
814	WD2C ASSY	P9500XX	1	
815	FFT ASSY	P9500YJ	1	T3305Z**
816	FM3C ASSY	P9503XY	1	FOR P9503AT, AQ
	FM3CE ASSY	P9503YH	1	FOR P9503AR, AS
817	CMMC ASSY	P9503YJ	1	
818	CSCC ASSY	P9503XC	1	
819	CBFM ASSY	P9503XE	1	
820	CVDO ASSY	P9503XL	1	FOR P9503AT, AQ
	CVDO–E ASSY	P9503YL	1	FOR P9503AR, AS

** : Refer to T3 NUMBERS Table.

OPERATOR CSL ASSY
P9503AT, P9503AQ, P9503AR, P9503AS

MATERIAL LIST (19/19)

ITEM	PART NAME	PART NO.	QTY.	DESCRIPTION	
821	MOTHERBOARD ASSY	P9503YA	1		
822	CONN ASSY	P9500ZA	1	T3305T**	
823	IOCON ASSY	P9500XA	1	T3305K**	
824	PSIA ASSY	P9500YS	1		
–	CSTERM	U0004FQ	1		
–	CSTERM	U0005FQ	1		
–	CAPACITOR	U4610CF	1		
830	VTRPB ASSY	P9500YA	1	T3305AG**	FOR P9503AQ
		P9500VY	1	FOR P9503AR, AS	
831	CCINE ASSY	P9503XN	1	FOR P9503AQ, AR, AS	
@	RSC ASSY	P9500WW	1		
@	EXTENDER ASSY	P9500YY	1		

** : Refer to T3 NUMBERS Table.

VIDEO DISPLAY MONITOR ASSY 1/1 ⚠3

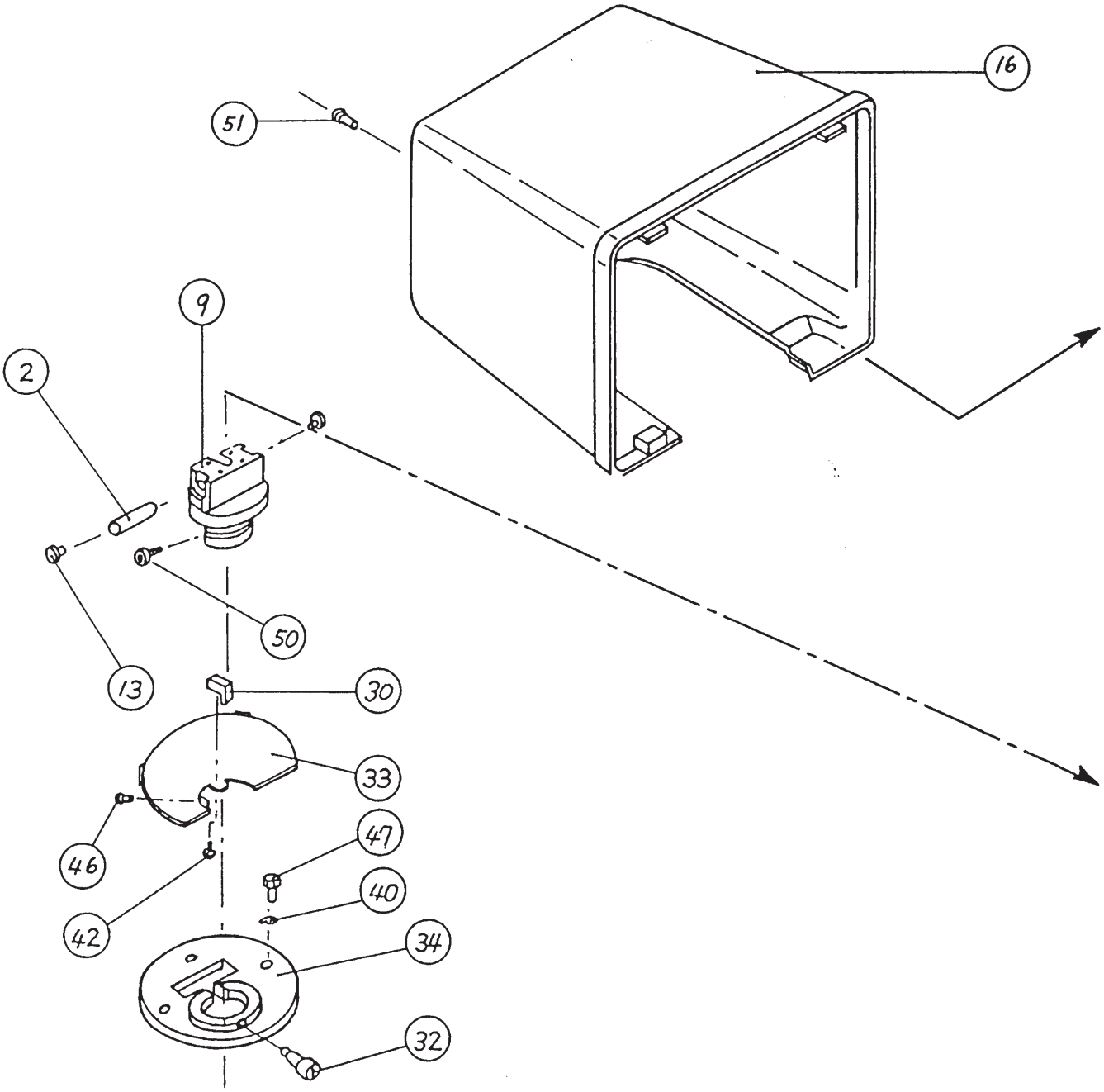

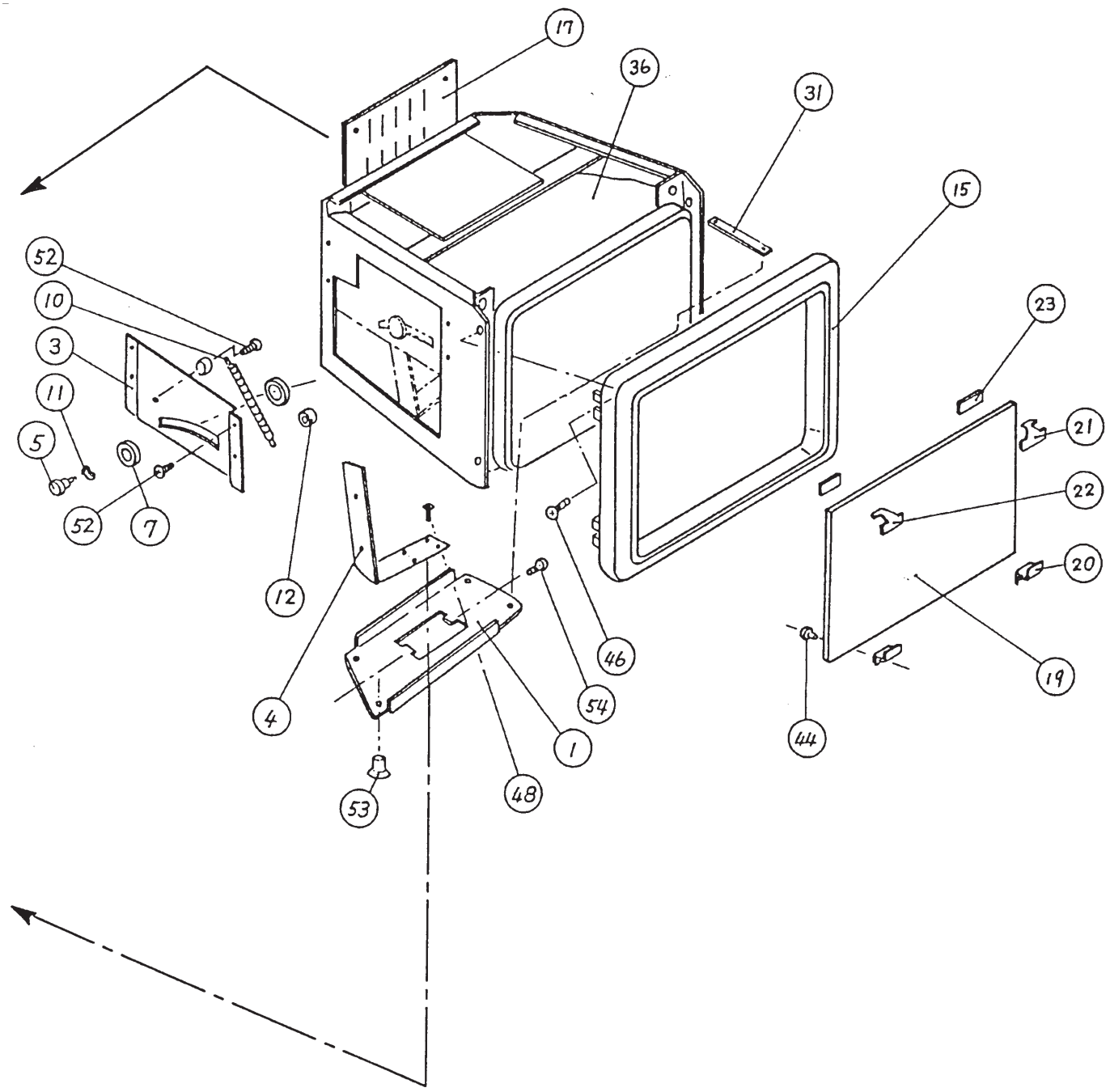
17
36
31
15
52
10
3
11
5
52
7
23
21
22
20
12
46
54
4
1
44
19
53
48

VIDEO DISPLAY MONITOR ASSY
P9503LA, P9503LB

MATERIAL LIST (1/2) 7

ITEM	PART NAME	PART NO.	QTY.	DESCRIPTION
1	SHAFT BRKT	P9503LC	1	
2	TILT SHAFT	P9506LD	1	
3	STAB BRKT	P9503LE	1	
4	BALANCE BRKT	P9503LF	1	
5	SLIDE SCREW	P9506LG	1	
7	SLIDE P1	P9506LJ	1	
9	ROTATION SLIDER	P9503LQ	1	
10	SPRING	P9503LN	1	
11	WAVE WASHER	U0709AA	2	
12	CUSHION	U0127AE	2	
13	BUSH	U0916AH	2	
15	ESCUTHEON	P9506LX	1	
16	REAR COVER	P9503LY	1	
17	CRT REAR BRKT	P9506LK	1	
19	COLOR VDT FILTER	P9503SF	1	
20	FILTER BRKT	P9500CL	2	
21	FILTER CLAMP L	P9500CN	1	
22	FILTER CLAMP R	P9500CP	1	
23	FILTER RUBBER	P9301KL	2	
30	CABLE SAFETY	P9503LL	1	
31	PL NUT	P9503LJ	2	
32	SCREW	P9503LH	1	
33	COVER	P9503LK	1	
34	BASE SLIDER	P9503CK	1	
36	12" COLOR MON	P9506TA	1	FOR P9503LA (NTSC)
		P9500UD	1	FOR P9503LB (PAL)
40	WASHER	Y9401WS	3	
42	SCREW	Y9305JS	1	
44	SCREW	Y9405JS	3	
46	SCREW	Y9408LK	8	
47	SCREW	Y9412ZX	3	

VIDEO DISPLAY MONITOR ASSY
P9503LA, P9503LB

MATERIAL LIST (2/2)

ITEM	PART NAME	PART NO.	QTY.	DESCRIPTION
48	SCREW	Y9416ZX	4	
50	SCREW	Y9406ZX	2	
51	SCREW	U0085AA	5	
52	SCREW	Y9406JS	6	
53	SCREW	Y9508ES	4	
54	SCREW	Y9512LK	2	Apply locking agent.

KEY BOARD ASSY 1/1 ⚠0

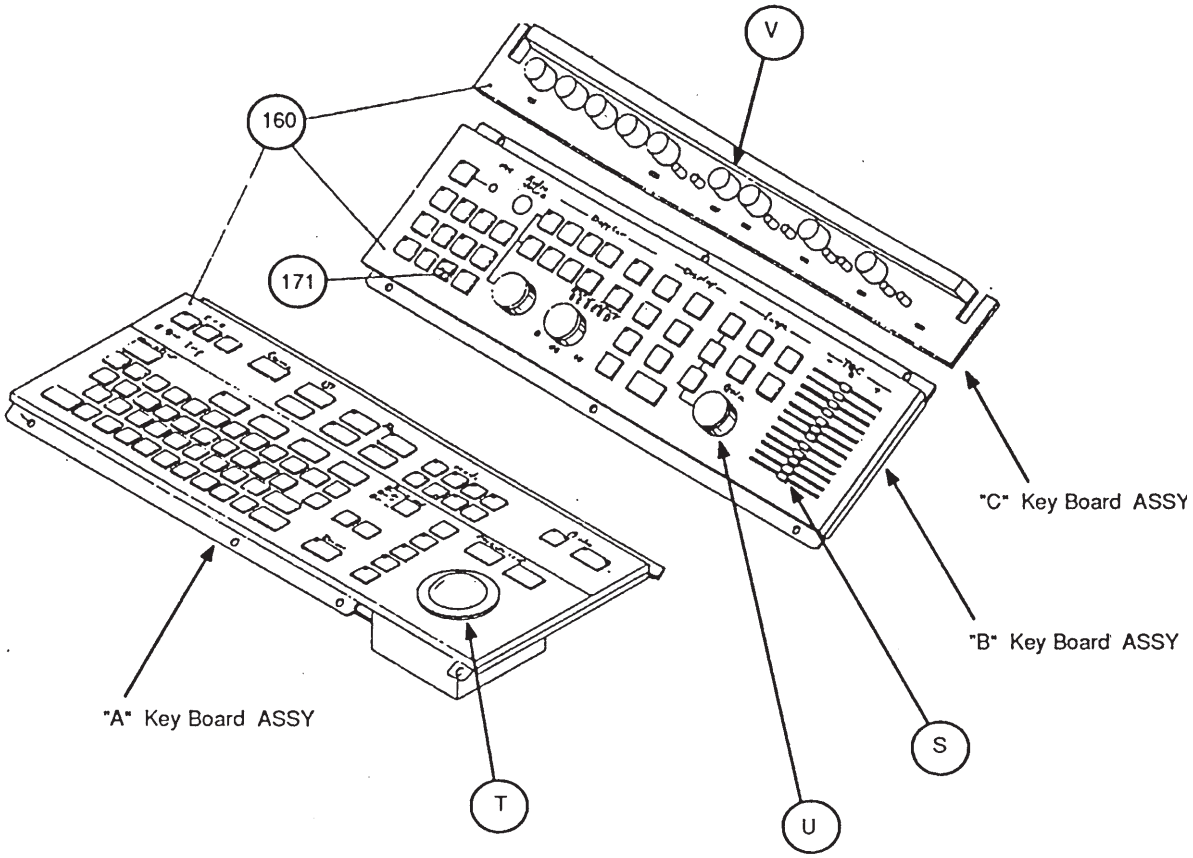

KEY TOP EXPANDED VIEW (mm)

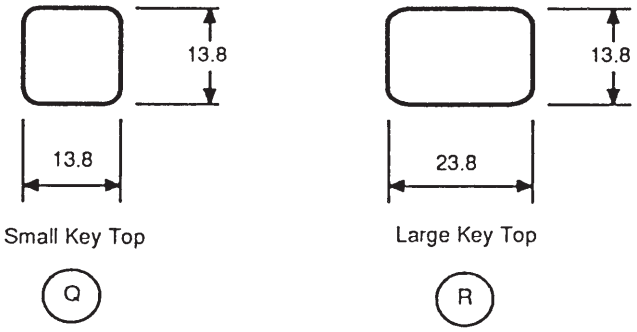

KEY BOARD ASSY
P9503SA

MATERIAL LIST (1/2) ⚠0

ITEM	PART NAME	PART NO.	QTY.	DESCRIPTION
160	KEY BOARD	P9503SA	1	Including "A","B", and "C" Key Board Assy
171	NPL ZOOM	P9500HD	1	(NPL: Name Plate Label)
T	Track Ball	B9713SE	1	
–	"A" Key Board ASSY	P9500SA–AA	1	With Key sheet
–	"B" Key Board ASSY	P9500SA–AB	1	With Key sheet
–	"C" Key Board ASSY	P9500SA–AC	1	With Key sheet
–	"A" Key sheet	P9500SA–BA	1	only Key Sheet
–	"B" Key sheet	P9500SA–BB	1	only Key Sheet
–	"C" Key sheet	P9500SA–BC	1	only Key Sheet
–	Momentary Push–Key SW	P9500SA–CA	108	(B3F–1000)
–	Round LED (BG–3668S)	P9500SA–CB	62	Green
–	Square LED (BG5556K)	P9500SA–CC	10	Yellow
–	Square LED (AI–5556K)	P9500SA–CD	2	
–	Microphone (EM–60)	P9500SA–CF	1	
–	Rotary Volume (RK911)	P9500SA–CG	8	For ECG, PCG, Aux1 and Aux2 Position
–	Slide–Switch (AS–12AH)	P9500SA–CH	7	For Sector Angle, ECG Gain On/Off, Frequency Double, PCG Gain On/Off, Aux1 Gain On/Off, Aux2 Gain On/Off, Light On/Off
–	Rotary Volume (RK16312A)	P9500SA–CJ	1	For Audio Volume
–	Rotary Pulse SW (SRGF)	P9500SA–CK	2	For gain on Doppler
–	Rotary Code SW (SRRS)	P9500SA–CL	2	For Display Intensity, PCG Gain
–	Rotary Code SW (SRRS)	P9500SA–CM	1	For Acoustic Power

KEY BOARD ASSY
P9503SA

MATERIAL LIST (2/2) ⚠0

ITEM	PART NAME	PART NO.	QTY.	DESCRIPTION
–	Rotary Code SW (SRRS)	P9500SA–CN	6	For Frame Average, Time Gated, ECG Gain, PCG Filter, Aux1 Gain, Aux2 Gain
–	Slide–Volume (RSHA3)	P9500SA–CP	8	For TGC
Q	Small Key Top	P9500SA–CQ	98	
R	Large Key Top	P9500SA–CR	10	
S	TGC Knob	P9500SA–CS	8	
U	Large Knob	P9500SA–CU	3	
V	Small Knob	P9500SA–CV	9	
–	Ribbon Cable	P9500SA–CW	1	From CN7 of "B"Board toCN7 of "A" Board
–	Ribbon Cable	P9500SA–CX	1	From CN8 of "B"Board toCN8 of "A" Board
–	Ribbon Cable	P9500SA–CY	1	From CN9 of "B"Board toCN9 of "A" Board
–	Ribbon Cable	P9500SA–CZ	1	From CN10 of "B"Board toCN10 of "A" Board

CROSS REFERENCE

YMS NO.	GE PART NO.
P9500BB	46–284088P98
P9500BF	46–284088P1
P9500BG	46–284088P2
P9500BH	46–284088P82
P9500BJ	46–284088P99
P9500BL	46–284088P3
P9500BM	46–284088P117
P9500BN	46–284088P77
P9500BP	46–284088P78
P9500BQ	46–284088P94
P9500BS	46–284088P96
P9500BT	46–284088P97
P9500BU	46–285057P1
P9500BV	46–285056P1
P9500BW	46–285054P1
P9500CA	46–284270G1
P9500CK	46–284088P100
P9500CQ	46–284088P101
P9500CR	46–284088P102
P9500CS	46–284088P103
P9500CT	46–284088P104
P9500CU	46–284088P105
P9500CX	46–284088P112
P9500CY	46–284088P113
P9500DC	46–284088P119
P9500DD	46–284088P120
P9500DE	46–284088P121
P9500DF	46–284088P122
P9500DG	46–284088P123
P9500DH	46–284088P124
P9500DJ	46–284088P125
P9500DK	46–284088P126
P9500DM	46–284088P128
P9500DP	46–284088P130
P9500DQ	46–284088P250
P9500DU	46–284088P46
P9500DW	46–284088P48
P9500EA	46–284088P4
P9500EB	46–284088P5
P9500EC	46–284088P6
P9500ED	46–284088P7
P9500EF	46–284088P9
P9500EM	46–284088P83
P9500EP	46–284088P85
P9500EQ	46–284088P86
P9500ER	46–284088P87
P9500ES	46–284088P88
P9500EU	46–284088P90
P9500EV	46–284088P91
P9500EX	46–284088P93
P9500EY	46–284088P84
P9500EZ	46–284088P95
P9500FA	46–284088P18
P9500FB	46–284088P19
P9500FD	46–284088P21
P9500FF	46–284088P23
P9500FG	46–284088P24
P9500FH	46–284088P25
P9500FM	46–284088P10
P9500FN	46–284088P36
P9500FP	46–284088P37
P9500FQ	46–284088P38
P9500FS	46–284088P39
P9500FT	46–284088P40
P9500FU	46–284088P41
P9500FV	46–284088P42
P9500FW	46–284088P43
P9500FY	46–284088P11
P9500GA	46–284088P57
P9500GB	46–284088P58
P9500GC	46–284088P59
P9500GD	46–284088P60
P9500GE	46–284088P61
P9500GF	46–284088P62
P9500GG	46–284088P63
P9500GH	46–284088P64
P9500GJ	46–284088P65
P9500GK	46–284088P66
P9500GL	46–284088P67
P9500GM	46–284088P68
P9500GN	46–284088P69
P9500GR	46–284088P72
P9500GT	46–284088P74
P9500GU	46–284088P75
P9500GW	46–284088P111
P9500GX	46–284088P79
P9500GZ	46–284088P81
P9500HB	46–284088P116
P9500JA	46–284269G1
P9500JC	46–285055P1
P9500SA	46–284268G1

CROSS REFERENCE (Continued)

YMS NO.	GE PART NO.
P9500SE	46–284088P108
P9500TD	46–284322G1
P9500VZ	46–284088P141
P9500WE	46–284201G1
P9500WJ	46–284962P1
P9500WS	46–284207G1
P9500WU	46–284208G1
P9500WW	46–284218G1
P9500WY	46–284219G1
P9500XA	46–284210G1
P9500XD	46–284211G1
P9500XE	46–284980P1
P9500XJ	46–284977P1
P9500XL	46–284978P1
P9500XN	46–284972P1
P9500XQ	46–284975P1
P9500XS	46–284974P1
P9500YA	46–284370G1
P9500YC	46–284212G1
P9500YE	46–284213G1
P9500YG	46–284214G1
P9500YJ	46–284220G1
P9500YL	46–284215G1
P9500YS	46–284282G1
P9500YU	46–284221G1
P9500YW	46–284973P1
P9500ZA	46–284979P1
P9500ZC	46–284971P1
RF0207A	46–284965P1
RF0207B	46–284964P1
U0002MC	46–284088P160
U0003AQ	46–284088P56
U0003FP	46–284088P161
U0009EF	46–284088P148
U0018SS	46–284088P165
U0020FP	46–284088P164
U0021WC	46–284088P167
U0024EK	46–284088P153
U0025EK	46–284088P154
U0026EK	46–284088P155
U0027EK	46–284088P156
U0042AG	46–284088P44
U0086AG	46–284088P45
U0103EF	46–284088P149
U0108FP	46–284088P162
U0110AG	46–284088P131
U0117AE	46–284088P13
U0118AE	46–284088P14
U0236EE	46–284088P142
U0237EE	46–284088P143
U0238EE	46–284088P144
U0239EE	46–284088P145
U0240EE	46–284088P146
U0241EE	46–284088P147
U0435FD	46–284088P286
U0447FD	46–284088P166
U0448FD	46–284088P284
U0449FD	46–284088P285
U0500AC	46–284088P54
U0503AM	46–284088P150
U0504AM	46–284088P151
U0508AC	46–284088P107
U0519AC	46–284088P132
U0529AC	46–284088P17
U0606AM	46–284088P152
U0905AH	46–284088P55
U0907AH	46–284088P52
U1220FA	46–284088P242
U2037MR	46–284088P158
U2038MR	46–284088P159
U3001WD	46–284088P168
Y9306JS	46–284088P338
Y9401WL	46–284088P332
Y9508ZX	46–284088P334
Y9601CS	46–284088P329
Y9906JS	46–284088P339

T3 NUMBERS

Use these numbers when exchanging PC Boards, monitors, or keyboards with components from General Electric Medical Systems Digital Board Repair.

T3 Number	Item No.	Description
T3305A	803	Exchange Log PWB Assy per 46–284201G1 (YMS P9500WE)
T3305B	804	Exchange XPSW PWB Assy per 46–284975P1 (YMS P9500XQ)
T3305C	805	Exchange CDAF PWB Assy per 46–284974P1 (YMS P9500XS)
T3305E	807	Exchange TRA PWB Assy per 46–284972P1 (YMS P9500XN)
T3305H	810	Exchange IOP PWB Assy per 46–284208G1 (YMS P9500WU)
T3305K	823	Exchange I/O CONN PWB Assy per 46–284210G1 (YMS P9500XA)
T3305T	822	Exchange Connector PWB Assy per 46–284979P1 (YMS P9500ZA)
T3305Z	815	Exchange FFT PWB Assy per 46–284220G1 (YMS P9500YJ)
T3305AA	800	Exchange PSSA PWB Assy per 46–284221G1 (YMS P9500YU)
T3305AG	–	Exchange VTRPB PWB Assy per 46–284370G1 (YMS P9500YA)

10–1 INTRODUCTION

This chapter provides preventative maintenance procedures. If performed according to schedule, they should keep the RT 6000/RT 6800 operating properly and safely.

10–1–1 Periodic Maintenance

Periodic maintenance consists of visual inspections, system performance checks and periodic cleaning of certain critical parts. Perform this procedure at six month intervals.

10–1–2 Reference Chapters

Many of the procedures in this chapter are described in Chapter 4, Functional Checks, Chapter 6, Service Adjustments, and Chapter 7, Schematics. If part replacement is required, refer to Chapter 9, Renewal Parts.

10–2 PERIODIC MAINTENANCE PROCEDURE

1. Perform functional checks as described in Chapter 4, Functional Checks.
2. Check power cable, transducer cable(s), footswitch cable, video monitor cable and their respective connectors for signs of wear. Replace as required. See Chapter 9, Renewal Parts, for parts numbers and ordering information.
3. Check the four PC Board cooling fans; check the two power supply cooling fans for signs of wear.
4. Ensure all power supply voltages are within tolerance. See Chapter 6, Service Adjustments, for adjustment procedure.
5. Apply touchup paint as required. Use classic white (PN 46—230666P1 in spray can; PN 46—230666P2 in can), and charcoal (PN 46—220244P1 in spray can).
6. Gently clean video monitor. Use a soft folded cloth and a non—hydrocarbon based glass cleaner solution.
7. Perform electrical safety tests on the following components:
   a. Hospital outlet (Facility power wiring test).
   b. All transducers (Transducer source leakage current test).
   c. Console and peripherals (Chassis source leakage current test and ground continuity test).

   See Chapter 3 of the RT 6000/RT 6800 Service Manual for test procedures.