Patient Monitors Menu

PROPAQ®
100-Series* Monitors
Calibration/Maintenance Manual
M-Series Hardware, Software Versions 7/8

IMPORTANT SERIAL NUMBER INFORMATION

This manual (810-0334-XX) applies only to 100-Series Monitors with serial numbers beginning with an "M" (such as ME00204, or MB00223), and to printers with serial numbers beginning with MCO. If your printer's serial number begins with TCO, and your monitor's serial number begins with TB, use Service Manual 810-0012-XX; if your monitor's serial number begins with TE, use Service Manual 810-0257-XX.

Copyright ©1993 by Protocol Systems, Inc. All rights reserved. No part of this document may be duplicated in any form without the written permission of Protocol Systems, Inc.

GSA Listing # V797P-3165J
NSN Listings:
Model 102/LCD: 6515-01-3156196
Model 104/LCD: 6515-01-3156198
Model 106/LCD: 6515-01-3156197
Model 102/EL: 6515-01-3627449
Model 104/EL: 6515-01-3627451
Model 106/EL: 6515-01-3627447
Expansion Module with Printer: 6515-01-3159814
Oximeter (SpO2): 6515-01-3631219

Protocol® and Propaq® are registered trademarks of Protocol Systems, Inc.

Protocol Systems, Inc. is protected under various patents and patents pending.

NELLCOR® and DURASENSOR® are registered trademarks, and C-LOCK™ and OXISENSOR™ are trademarks of Nellcor, Incorporated. Nellcor is protected under U.S. patents 4,621,643, 4,653,498, 4,700,708, 4,770,179, 4,802,486, 4,869,254, 4,928,692, and 4,934,372.

HP and Hewlett-Packard are registered trademarks of Hewlett-Packard Company.

Protocol Systems, Inc.
8500 S. W. Creekside Place
Beaverton, OR 97005 USA
(503) 526-8500
Customer Service: (800) 289-2500
Facsimile: (503) 526-4300
Technical Service: (800) 289-2501

Part Number: 810-0334-01Rev. A
First Printing: 4/94
Printed in the U.S.A.

A-Series Hardware Service Manual Update

Introduction

The following table identifies important information about this update.

Item	Information
This update/change has part number	810-0698-00 Rev. A
This update/change affects/covers information in manual(s) with Protocol part number(s)	810-0334-01
This update/change affects/covers	Propaq monitors with “A” serial number prefix
The information in this update/change is provided because of	New revision of hardware in Propaq monitor prompted new serial number prefix “A” which requires update/change to service information already published for existing Propaq monitors.
For more information contact	Protocol Systems, Inc. Technical Support at: 800 289 2501 or 503 526 8500. See the Service Manual for other access information.

Copyright ©1995 by Protocol Systems, Inc. All rights reserved. No part of this document may be duplicated in any form without the written permission of Protocol Systems, Inc.

Propaq®, Acuity®, and Protocol® are registered trademarks of Protocol Systems, Inc.

Protocol Systems, Inc.
Technical Service Dept.
8500 SW Creekside Pl.
Beaverton, Oregon 97008-7107

In the United States: 800.289.2501
Worldwide: 503.526.8500
Facsimile: 503.526.4910
Worldwide e-mail: solutions@protocol.com
World Wide Web access: http://www.protocol.com/service

Overview

In 1994, Protocol Systems introduced the “International” series of Propaq monitors designated with the serial number prefix “A.” This hardware reduces electromagnetic emissions, improves susceptibility to electro-magnetic interference (EMI), and incorporates other features implemented in the latest version of Propaq software, including the End-tidal CO_2 monitoring option. Due to these changes, this Service Manual update was produced to inform you of the effects, if any, the changes had upon current service manuals.

The information in this update / change is applicable only to the Propaq Service Manual part number 810-0334-01. It does not affect any other service document.

For board layouts, schematics, and assembly drawing changes effected with the release of A series hardware, contact Protocol Systems for information.

Overview of Changes to Sections

Section Affected	Description
Section 1	None
Section 2	None
Section 3	None
Section 4	None
Section 5	None
Section 6	None
Section 7	None
Section 8	Additional part numbers. Contact Protocol Technical Support.
Appendices	None

There are no other changes to the document identified above.

###

Safety Summary

The general safety information in this summary is for both operating and servicing personnel. Specific warnings and cautions will be found throughout the Operator's Guide and other manuals where they apply. Such specific warnings and cautions may not appear here in this summary.

CAUTION CAUTION statements in the documentation identify conditions or practices that could result in damage to the equipment or other property.

WARNING WARNING statements in the documentation identify conditions or practices that could result in personal injury.

Symbols

The following symbols may appear in the documentation, and on labels on the Propaq monitors.

DANGER: Risk of explosion when used in the presence of flammable anesthetics. (This is on older versions only.)

Type CF, Isolated patient connections comply with the allowable risk (leakage) current limits for direct cardiac application and are protected against the effects of defibrillation.

Type BF, Isolated accessible and applied parts comply with the allowable risk (leakage) current limits for noncardiac body applications, protecting the patient and operator from risk of electric shock.

Protected against water dripping vertically. (Protection Classification IPX1 per IEC Publication 529.)

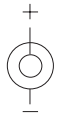

DC power input connector for applications not requiring a "high output" power adapter.

DC power input connector for applications requiring a "high output" power adapter.

For continued fire protection, use only the specified fuse.

Internal power transformer meets requirements of a short-circuit-proof safety-isolating power transformer (symbol is located on ac power adapter).

Caution: Refer to User's Guide and accompanying documentation.

Caution: Refer servicing to qualified service personnel. (For products certified by Underwriters Laboratories.)

Battery.

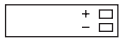

Positioning of battery.

Direct current.

Alternating current.

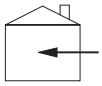
For indoor use only.

Important Safety Considerations

Place the product in a location where it cannot harm the patient should it fall from a shelf or other mount.

Do not autoclave this product.

Inspect the power adapter cord periodically for fraying or other damage, and replace the adapter as needed. (The power adapter is not a serviceable part; however, the detachable power cord used with the Universal Power Adapter is replaceable). Do not operate the apparatus from mains power with a damaged power adapter cord or plug.

Frequent electrical and visual checks should be made on cables and electrode wires. Broken or frayed electrode wires, or loose snap-fittings may cause interference or loss of signal. Particular attention should be paid to the point at which the wire enters the snap-fittings, since flexure will eventually cause breakage of strands at this point.

Avoid electrosurgery burns at monitoring sites by ensuring proper connection of the electrosurgery return circuit. If the electrosurgery return electrode is improperly connected, the other patient-connected monitoring electrodes and transducers (particularly ECG electrodes and temperature probes) will serve as return paths for the high-frequency energy. This is especially true for older electrosurgery units which have the return circuit deliberately earth-grounded. For improved safety, never deliberately ground the return circuit of an isolated-output electrosurgery unit. If necessary, operate the monitor on battery power only to prevent a return to earth ground through the monitor.

To assure operator safety during defibrillation, keep the discharge paddles away from ECG and other electrodes, as well as other conductive parts in contact with the patient. During defibrillation, always avoid contact with any accessories, such as cables and sensors, connected to the Propaq's left side panel. For additional safety precautions, refer to the defibrillator operator's manual.

To ensure patient safety, the conductive parts of the ECG electrodes (including associated connectors) and other patient-applied parts should not contact other conductive parts, including earth ground, at any time.

Do not operate this product in the presence of flammable anesthetics. Explosion can result. This product must only be operated in strict conformance with local fire prevention regulations.

NOTE

Within certain governmental jurisdictions, all interconnected accessory equipment must be labeled by an approved testing laboratory. After interconnection with accessory equipment, risk (leakage) current and grounding requirements must be maintained.

To ensure patient safety, use only accessories recommended or supplied by Protocol Systems, Inc. For a list of those accessories, see the Protocol Products and Accessories book (PN 810-0409-00) that accompanies the Users Guide.

Do not autoclave accessories unless the manufacturer's instructions clearly approve it. Many accessories can be severely damaged by autoclaving.

To ensure conformance to risk (leakage) current requirements when operating from an ac mains power source, use only a Protocol Systems' 503-0002, 503-0053, or 503-0054 power adapter.

Pour limiter le courant de fuite conformément aux exigences lorsque l'appareil est branché au secteur, utiliser seulement un bloc d'alimentation de la série 503-0002 503-0053, 503-0054.

A product that has been dropped or severely abused should be checked by qualified service personnel to verify proper operation and acceptable risk (leakage) current values.

While under warranty, the Propaq should be serviced only by Protocol Systems' service personnel. Service documentation is available from Protocol Systems, Inc. to aid the biomedical engineer during post-warranty period service.

Component replacement and internal adjustments must be made by qualified service personnel only.

Table of Contents

Section 1 General Information

Available Documentation 1-1
About This Manual 1-1
Product Description 1-2
Limited Warranty 1-3
History of Manuals By Monitor Serial Numbers 1-3

Section 2 Installation and Service

Introduction 2-1
Unpacking/ Repacking 2-1
Warranty Service 2-1
Repair and Upgrade Support 2-2
Recommended Service 2-3
Service Intervals 2-3
Functional Verification 2-4
Self Test 2-4
The Service Menus 2-4
Equipment Required 2-6
Procedure 2-6
Power System 2-7
Button Tests 2-8
Display 2-8
ECG Channel & Alarm Indicators 2-9
P1, P2 2-11
CUFF Channel 2-12
Temperature 2-13
Battery Capacity Test 2-14
SpO_2 Checks 2-14
Printer Tests 2-16

(section continued on next page)

Section 2 Installation and Service (Cont)

CO_2 Functional Verification 2-18
Determine Local Barometric Pressure 2-18
Determine Partial Pressure of Test Gas Source 2-19
Functional Verification Procedure 2-21
Patient Isolation Safety Checks 2-23
Patient Leakage (Risk) Current Test 2-23
Dielectric Strength (Hi-Pot) Test 2-23

Section 3 Calibration

Introduction 3-1
Equipment Required 3-1
The Service Menus 3-3
Accessing Functions 3-3
Calibration Procedure 3-4
Setup 3-5
Recharger Board 3-5
Main Board 3-9
Setup 3-9
Power Supplies 3-9
P1, P2 3-14
Delayed Analog/Defib Sync 3-15
CUFF Channel 3-16
Temperature 3-18
SpO_2 Calibration 3-19
MSP Board (CO_2) Calibration 3-19
Functional Verification 3-20

Section 4 Troubleshooting

Introduction 4-1
Screen Messages 4-1
Equipment Alerts and Caution Messages 4-1
ECG Messages 4-1
Invasive Pressure Messages 4-2
Cuff Messages 4-3
Temperature Messages 4-4
SpO_2 Messages 4-5
Printer Messages 4-5
CO_2 Messages 4-5
Fatal Error Codes 4-7

Section 5 Replacement Procedures

Introduction 5-1
System Software 5-1
Safety Tests 5-1
Opening the Monitor 5-2
Closing the Monitor 5-3
Replacing the Battery Pack 5-3
Replacing the Dual Battery Pack 5-4
Dual Battery in Expansion Module 5-5
Dual Battery in SpO_2 Module 5-6
Replacing the Lithium Battery 5-6
Replacing Fuses 5-7
Replacing the Air Filter 5-8
Replacing Air Tubing 5-9
Replacing Cables 5-9
Replacing System Software 5-10
Servicing Cuff Fittings 5-10

(section continued on next page)

Section 5 Replacement Procedures (Cont)

Replacing the Main Board 5-12
Removing Main Board 5-12
Installing Main Board 5-14
Replacing EL Front Panel Components 5-15
Replacing the Recharger Board 5-16
Removing Recharger Board 5-16
Installing Recharger Board 5-17
Replacing the Pump 5-18
Removing Pump 5-18
Installing Pump 5-18
Replacing the Side Panels 5-19
Removing Side Panels 5-19
Installing Side Panels 5-19
Separating Expansion Module From Monitor 5-21
Attaching Expansion Module 5-22
Opening Expansion Module 5-23
Closing Expansion Module 5-24
Replacing the Printer 5-25
Removing Printer 5-25
Installing Printer 5-26
Replacing Expansion Module Front Panel 5-27
Removing Expansion Module Front Panel 5-27
Installing Expansion Module Front Panel 5-27
Replacing Expansion Module Button Board and Buttons 5-28
Removing Button Board and Buttons 5-28
Installing Button Board and Buttons 5-28
Separating SpO_2 Module From Monitor 5-29
Attaching the SpO_2 Module 5-30
Opening the SpO_2 Module 5-30
Closing the SpO_2 Module 5-31

Section 5 Replacement Procedures (Cont)

Replacing the SpO_2 Circuit Boards 5-31
Removing SpO_2 Circuit Boards 5-32
Installing the SpO_2 Circuit Boards 5-32
Replacing the CO_2/SpO_2 Circuit Boards 5-33
Removing the CO_2/SpO_2 Circuit Boards 5-33
Installing the CO_2/SpO_2 Circuit Boards 5-34
Replacing Side Panels 5-34

Section 6 Theory of Operation

Introduction 6-1
Propaq Monitor 6-3
System Description 6-3
Monitoring Electronics 6-3
NIBP Pneumatics 6-4
Power Electronics 6-4
Functional Description 6-5
Power Distribution 6-5
Cabling Diagrams 6-5
Expansion Module and Printer 6-6
System Description 6-6
Overview 6-6
Print Head 6-6
Functional Description 6-6
Pulse Oximetry Option (SpO_2) 6-8
System Description 6-8
Overview 6-8
Oxygen Transducers 6-9
Functional Description 6-10

(section continued on next page)

Section 6 Theory of Operation (Cont)

Capnography (CO_2) System 6-15
System Description 6-15
Overview 6-15
Functional Description 6-16
Mainstream Board 6-16
Non Isolated Circuitry 6-16
Isolated Circuitry 6-16
IPC Expansion 6-17
Power Distribution System 6-17
Mainstream CO_2 Sensor 6-18

Section 7 Diagrams

Section 8 Replaceable Parts

Introduction 8-1

Appendix A Buildable Test Equipment

Appendix B Dynatech/Nevada Patient Simulator Modification

Appendix C Software Revision History

List of Illustrations

Fig. 2-1. The Service Menus, Version 7 2-4
Fig. 2-2. The Service Menus, Version 8 2-5
Fig. 2-3. Cuff Calibration Kit Attachments 2-12
Fig. 2-4. SpO2 Waveform Shape 2-15
Fig. 2-5. Printer Test Printout. 2-17
Fig. 3-1. The Service Menus, Version 7 3-3
Fig. 3-2. The Service Menus, Version 8 3-4
Fig. 3-3. Locations of P1, P4, and P6, Recharger Board 3-6
Fig. 3-4. Recharger Board Test Points and Adjustments 3-7
Fig. 3-5. Main Board Test Points and Adjustments 3-10
Fig. 3-6. Defib Sync/Analog Output Connector 3-15
Fig. 5-1. Opening the Propaq: Screws and Transducer Tubing 5-2
Fig. 5-2. Battery Pack Compartment 5-4
Fig. 5-3. Fuse Locations 5-7
Fig. 5-4. Location of Air Filter 5-8
Fig. 5-5. Location of System Software PROMS and Lithium Battery 5-10
Fig. 5-6. Replacing Cuff Hose Fittings 5-11
Fig. 5-7. Disassembling the Metal Cuff Fitting 5-11
Fig. 5-8. Main Board Screws, Connectors and Cables 5-13
Fig. 5-9. Recharger Board Screws, Connectors & Cables 5-16
Fig. 5-10. Proper Pump Orientation 5-18
Fig. 5-11. Expansion Module Securing Screws 5-21
Fig. 5-12. Disconnecting Monitor From Expansion Module/Battery Pack 5-22
Fig. 5-13. Disconnecting Battery from Expansion Module 5-23
Fig. 5-14. Expansion Module Rear Panel Gasket Channels and O-Ring Gaskets 5-25
Fig. 5-15. Installing Printer Main Board Into Expansion Module 5-26
Fig. 5-16. Expansion Module Front Panel (Rear View) 5-29
Fig. 5-17. Securing Tabs 5-30

(continued on next page)

Fig. 6-1. Printer Functional Block Diagram 6-7
Fig. 6-2. SpO2 System Block Diagram 6-9
Fig. 6-3. SpO2 Oxygen Transducer (NELLCOR) 6-10
Fig. 6-4. SpO2 Board Functional Block Diagram 6-11
Fig. 6-5. MiniSOOM Timing (Normal Run Mode) 6-12
Fig. 6-6. MiniSOOM Timing (Calibration Mode) 6-13
Fig. 6-7. Information Flow Between Expansion Module 6-16
Fig. 6-8. Capnography Functional Block Diagram 6-17
Fig. 6-9. CO2 Sensor Components 6-18
Fig. 7-1. Cable Location Diagram (EL Display) 7-3
Fig. 7-2. Cable Location Diagram (LCD Display) 7-4
Fig. 7-3. Main Board to Recharger Board Cable 7-5
Fig. 7-4. AAMI ECG to Main Board Cable 7-5
Fig. 7-5. HP ECG to Main Board Cable 7-5
Fig. 7-6. 6-Pin P1/P2 to Main Board Cable 7-6
Fig. 7-7. HP P1/P2 to Main Board Cable 7-6
Fig. 7-8. T1/T2 to Main Board Cable 7-7
Fig. 7-9. Analog and Speaker Output to Main Board Cable 7-7
Fig. 7-10. RS423 to Main Board Cable 7-8
Fig. 7-11. Recharger Board to Battery Cable/Expansion Connector 7-8
Fig. 7-12. Battery Compartment Temperature Sensor Cable 7-8
Fig. 7-13. External Power Connector to Recharger Board Cable 7-9
Fig. 7-14. Expansion Connector Cable 7-9
Fig. 7-15. EL Backlight panel to Recharger Bd Cable 7-9
Fig. 7-16. LED to Main Board Cable 7-9
Fig. 7-17. LEDs and Switch to Recharger Board Cable 7-10
Fig. 7-18. SpO2 Speaker Cables 7-10
Fig. 7-19. Pump Cable 7-11
Fig. 7-20. SCP Board to Rear Chassis Expansion Connector Cable 7-11
Fig. 7-21. Expansion Module Battery to Printer Cable 7-11
Fig. 7-22. SCP Board to Printer Main Board Cable 7-12
Fig. 7-23. Printer Main Board to Key Board Cable 7-12
Fig. 7-24. Printer Main Board to Rear Chassis Expansion Connector Cable 7-12
Fig. 7-25. Mini SOOM Brd to Sub D Oximeter Sensor Cable 7-13
Fig. 7-26. Main Board to LCD Recharger Board Cable 7-13

The following are block diagrams, printed on 11 x 17 pages at the back of Section 7

Fig. 7-27. System Level Block Diagram
Fig. 7-28. Isolated Patient Circuits Block Diagram
Fig. 7-29. Non-Isolated Circuits Block Diagram
Fig. 7-30. Displays Block Diagram
Fig. 7-31. EL Recharger and Power Supplies/Distribution Block Diagram
Fig. 7-32. LCD Recharger Block Diagram

The following are assembly diagrams, printed on 11 x 17 pages at the back of Section 7

Fig. 7-33. SpO_2 for Propaq, 824-0204-XX, sheet 1 of 2
Fig. 7-34. SpO_2 for Propaq, 824-0204-XX, sheet 2 of 2
Fig. 7-35. EL Display Panel, 824-0208-XX, sheet 2 of 9
Fig. 7-36. LCD Display Panel, 824-0208-XX, sheet 3 of 9
Fig. 7-37. SpO_2/CO_2 Option W/Printer, 824-0208-XX, sheet 4 of 9
Fig. 7-38. SpO_2/CO_2 Option Without Printer, 824-0208-XX, sheet 5 of 9
Fig. 7-39. SpO_2 Option W/Printer, 824-0208-XX, sheet 6 of 9
Fig. 7-40. SpO_2/CO_2 Option W/Printer, 824-0208-XX, sheet 7 of 9
Fig. 7-41. Printerless SpO_2/CO_2 Option, 824-0208-XX, sheet 8 of 9
Fig. 7-42. Main Board EL PCB 2nd Level Details, 824-0211-01, sheet 4 of 4
Fig. 7-43. Main Board LCD PCB 2nd Level Details, 824-0218-00, sheet 4 of 4
Fig. 7-44. EL Front Panel, 824-0226-00, sheet 1 of 2
Fig. 7-45. EL Front Panel, 824-0226-00, sheet 2 of 2
Fig. 7-46. Rear Chassis, 824-0230-00, sheet 3 of 5
Fig. 7-47. Rear Chassis, 824-0230-00, sheet 4 of 5
Fig. 7-48. Rear Chassis, 824-0230-00, sheet 5 of 5
Fig. A-1. Electromedics 37°C Temperature Simulator Schematic A-2
Fig. A-2. Power Supply Adapter Cables Schematic A-2
Fig. A-3. Battery Substitution Plugs Schematic A-3
Fig. A-4. Temperature Sensor Substitution Plug Schematic A-3
Fig. A-5. RS-423 Loopback Test Fixture A-4
Fig. B-1. Modified Invasive Pressure Model 215A Cable B-2
Fig. B-2. Model 215A Top PCB Modification B-2

List of Tables

Table 1-1. Propaq 100-Series Monitors Configurations 1-3

Table 2-1. Recommended Service Intervals/Procedures 2-3

Table 2-2. Equipment Required for Functional Verification 2-6

Table 2-3. Local Uncorrected Barometric Pressure as a Function of Altitude 2-19

Table 2-4. Possible Sources of CO_2 Verification Test Errors 2-22

Table 2-5. Electrical Connections for Patient Leakage (Risk) Current Safety Tests 2-23

Table 2-6. Summary of Connection Points and High-Voltage Test Potentials 2-24

Table 3-1. Recommended Calibration Intervals 3-1

Table 3-2. Equipment Required—Calibration and Functional Verification 3-2

Table 3-3. Isolated Power Supply Voltage Checks 3-11

Table 3-4. Non-Isolated Power Supply Voltage Checks 3-12

Table 3-5. Isolated Power Supply Ripple Checks 3-12

Table 3-6. Non-Isolated Power Supply Ripple Checks 3-13

Table 6-1 Schematic, Board, Assembly, Drawing and Service Kit Part Numbers by Board Type 6-2

List of Cabling, Block, and Assembly Diagrams 7-1

Table 7-1. Location of Cables and Connectors (EL Display) 7-3

Table 7-2. Location of Cables and Connectors (LCD Display) 7-4

Table 8-1. Service Parts, “MX”Serial Number Applicability 8-2

Table B-1. Modified Dynatech/Nevada Model 215A Cable Wiring B-1

Table C-1. Software Revisions C-1

Section 1

General Information

Available Documentation

The *Calibration/Maintenance Manual* contains information for the service technician to service Propaq monitors at the **replaceable module level.** Replaceable modules are items that can be easily replaced without desoldering circuit board components.

Servicing to the **component level** requires the *Schematics & Drawings Set,* and the appropriate option section for SpO_2, CO_2 and Propaq Printer options.

- For detailed circuit descriptions, bills of materials, mechanical assembly drawings, and schematics of the monitor main board, interconnect board, and recharger board, see the *Schematics & Drawings Set* (orderable separately as 810-0334-10).
- Similar information on the Printer, Oximeter, and Capnograph is found in the appropriate option section of the *Schematics & Drawings Set:*

Service manuals contain service information for the biomedical electronic technician (BMET or CBET). Only factory-trained technicians should service the Propaq series monitors.

NOTE

This manual does not include operating instructions or information. Refer to the appropriate user's guide.

About This Manual

The *Calibration/Maintenance Manual* contains eight sections and three appendices, as described below.

- **Section 1 General Information**—This section contains information about how to use the manuals, and a description of the Propaq series monitors, optional Expansion Module with printer, SpO_2 option, and CO_2 option.
- **Section 2 Installation and Service**—This section contains instructions on how to unpack and repack the monitor for shipping. Servicing interval recommendations are provided for developing preventive maintenance schedules. A functional verification procedure allows

checking the performance and safety features of the monitor without opening the case.

- **Section 3 Calibration—**This section lists all tools and test equipment needed to perform a complete calibration procedure. A description of the Service Menu functions is provided. The calibration procedure allows you to calibrate the Propaq to factory specifications.
- **Section 4 Troubleshooting**—This section contains descriptions of screen messages and software error codes for use in troubleshooting.
- **Section 5 Replacement Procedures—**This section contains information and step-by-step instructions on making modular repairs to the Propaq, and shows you how to remove and replace serviceable modules.
- **Section 6 Theory of Operation—**This section describes the Propaq's circuitry at the system and functional-block levels only.

  Detailed circuit operation descriptions for each of the monitor's circuit boards and specific options are contained in the *Schematics & Drawings Set* and appropriate option section, as noted on the previous page.
- **Section 7 Diagrams—**This section contains block diagrams and cabling drawings.
- **Section 8 Replaceable Parts—**This section lists serviceable mechanical and electrical parts (generally in kit form) for the Propaq series monitors, the printer, the pulse oximeter, and the capnography option.
- **Appendix A Buildable Test Equipment—**This section provides descriptions and schematics for test equipment that you can build for servicing the Propaq.
- **Appendix B Dynatech/Nevada Patient Simulator Modification—**This section shows you how to modify Dynatech/Nevada models 213A, 215A, and 217A Patient Simulators for use with the Propaq series monitors. This section is especially important if you simultaneously connect both the ECG and invasive blood pressure channels of this patient simulator to the Propaq.
- **Appendix C Software Revision History—**This section lists the software revisions for the Propaq.

Product Description

The Propaq series is a product line of lightweight, ultra-portable patient monitors applicable to a wide variety of health care services. These monitors measure and display a patient's vital signs, including ECG, non-invasive blood pressure, invasive blood pressure, temperature, oxygen saturation derived by pulse oximetry (with SpO_2 Option) and mainstream carbon-dioxide monitoring (with CO_2 Option). Propaq configurations vary depending on the model. Table 1-1 lists the monitors and their configurations available at the printing of this manual.

Table 1-1. Propaq 100-Series Monitors Configurations

	Standard Features							Options			
Model	**ECG**	**Cuff**	**P1**	**P2**	**T1**	**T2**	**Analog Out/ Defib Sync**	**SpO_2**	**CO_2**	**Printer**	**HP Conn.**
102	♥	♥			♥	♥	♥	♥	♥	♥	♥
104	♥	♥	♥		♥	♥	♥	♥	♥	♥	♥
106	♥	♥	♥	♥	♥		♥	♥	♥	♥	♥

All models of monitor may be ordered with the optional Hewlett-Packard patient connector side panel.

The Propaq Expansion Module allows SpO_2 and CO_2 monitoring to be added to any Propaq monitor. The Expansion Module with Printer (EMP) includes a high-resolution, dot-matrix printer for documenting patient vital signs.

Limited Warranty

The Propaq 100-Series Monitors are sold by Protocol Systems, Inc. under the warranties set forth in the warranty statement supplied with each product. Additional copies of the warranty statement can be obtained from Protocol Systems, Inc.

History of Manuals By Monitor Serial Numbers

Propaq manuals are updated with each new monitor design, and history information is provided (as deemed appropriate) for earlier monitors. In some cases, an early manual is re-released with an updated part number; in other cases, a new manual is released. The following table lists the releases of Propaq manuals, and cross-references the serial numbers of the monitor and printer (and the software version number) to which the manual applies.

Monitor/Printer Serial Number & Software Version	Issue/ Revision/ Part Number	Issue Date	Comments
SERVICE DOCUMENTATION			
TBXXXXX (Printer TCOxxxx) Software V.6	Rev A 810-0012-01		Technical Reference Guide
TEXXXXX (Printer TCOxxxx) Software V.6	Rev A 810-0257-00	2/92	Technical Reference Guide
MXXXXXX (Printer MCOxxx) Software V.7	Rev A 810-0334-00	10/92	Service Manual Version 7 software

Monitor/Printer Serial Number & Software Version	Issue/ Revision/ Part Number	Issue Date	Comments
MXXXXXX (Printer MCOxxx) Software V.7/8	Rev A 810-0334-01	9/93	Calibration/Maintenance Manual, adds Capnograph and Version 8 software
MXXXXXX (Printer MCOxxx) Software V.7/8	Rev A 810-0334-10	9/93	Schematics & Drawings Set
MXXXXXX (Printer MCOxxx) Software V.7/8	Rev A 810-0334-30	9/93	Printer Section of 810-0334-01
MXXXXXX (Printer MCOxxx) Software V.7/8	Rev A 810-0334-20	9/93	SpO_2 Section of 810-0334-01
MXXXXXX (Printer MCOxxx) Software V.7/8	Rev A 810-0334-40	9/93	CO_2 section of 810-0334-01
USERS DOCUMENTATION			
TXXX (Version 3.x)	Rev A 810-0035-00	4/89	Original Release (Users Guide)
TXXX (Printer TCOxxx)	Rev A 810-0085-00	8/89	Original Release (Printer Operators Guide)
TXXX (Version 4.x)	Revs A,B,C 810-0035-01	10/89, 12/89, 4/90	Updates for software 4.xx.xxx, misc. correction and update data, and international certification
TXXX (Version 5.x)	Rev A 810-0140-00	9/90	Updates for software 5.xx.xxx, adding SpO_2
TXXX (Version 6.x)	Rev A 810-0035-02	6/91	Updates for software 6.0, includes printer operator's guide, and SpO_2. Adds EL option.
TXXXX (Version 6.x)	Rev A 810-0203-00	8/91	Hewlett-Packard Connector update, supplements 810-0035-02
TXXXX (Version 6.x)	Rev A 810-0250-00	10/91	Pulse oximetry update, supplements 810-0035-02
TXXXX (Version 6.2)	Rev B 810-0324-00	6/92	Software 6.2 update, supplements 810-0035-02
MXXXX (Version 7.x)	Rev B 810-0331-00	6/92	Software 7.0 update, supplements 810-0035-02
MXXXXXX (Printer MCOxxx) (Version 8.0)	Rev A 810-0408-00	4/93	Software version 8.0. Original release of User's Guide. English language

Section 2

Installation and Service

Introduction

This section provides the information for unpacking, initial setup and checkout of the Propaq 100-series monitors. Information is provided for developing a preventive maintenance schedule.

When the monitor is first unpacked and before it is placed in service, the functional verification and safety checks provided in this section should be performed.

Unpacking/ Repacking

Use the following guidelines when unpacking the monitor from its shipping carton.

1. Before unpacking the monitor, check the shipping carton for damage.
2. If damage is apparent, it is a good idea to stop unpacking the carton and contact the shipping company for further instructions. If the carton is intact, unpack the Propaq.
3. With the Propaq out of its carton, check to see that all the items listed on the Packing Slip (provided with shipment) are in the shipping carton.
4. If an item is missing, first recheck the carton, then check with your receiving department. If necessary, contact Protocol Systems, Inc. at the address and phone number shown in **Repair and Upgrade Support**.

   The shipping carton and packing material should be saved for repacking the monitor in case it needs to be sent to a repair center or back to Protocol Systems for service.

Warranty Service

If during the warranty period, the Propaq requires service, DO NOT ATTEMPT TO SERVICE IT YOURSELF. For fast, convenient service from Protocol Systems, follow the procedure below.

Repair and Upgrade Support

For repair and upgrade information, contact:

Technical Services Dept.
Protocol Systems, Inc.
8500 S. W. Creekside Place
Beaverton, OR 97005-7107 U.S.A.

or call Protocol Systems, Inc. in the U.S.A. at **(800) 289-2500**.

Technical Services toll-free number: **(800) 289-2501.**

For world-wide facsimile communications, call **(503) 526-4200**.

If calling from outside the United States, call **(503) 526-8500**.

When calling Protocol for service information or to order service parts, please have the following information ready:

- model number (102, 104, or 106 from front of monitor),
- serial number (from back of instrument),
- software version (from startup screen)
- attached options, if any (such as printer or SpO_2 option)
- a full description of the problem or service needed
- your complete return shipping address
- your purchase order number (for non-warranty repairs, all upgrades and parts orders)
- a contact name and phone number for any further questions.

Model and serial numbers are printed on the label located on the rear of the monitor and options. The software version number is displayed each time the monitor is powered on.

If you are returning a Propaq for service:

- The Technical Service representative will give you a Return Material Authorization (RMA) number and tell you where and how to ship the monitor for service. Without the RMA number, Protocol cannot accept the monitor for service.
- Package the monitor in its original shipping carton using the original packing material. The material and carton were specifically designed for the monitor's safety during shipment.
- Clearly address the box and ship it to the address provided by Protocol's Technical Service representative. Be sure to write the RMA number on the outside of the shipping carton, and on any included correspondence.

For the location of your nearest Protocol Systems authorized repair center, or for information on all Protocol Systems products, contact Protocol Systems, Inc.

Recommended Service

The Calibration/Maintenance Manual provides instructions and information for technicians to repair the Propaq at the replaceable module level. Replaceable modules include circuit boards, large hardware items, such as the air pump, check valve, chassis parts, and other parts easily replaced without desoldering of surface-mount components and other small hardware. Module-level repair allows monitor repair in minimal time and for a nominal price for the replaceable module.

Because of the specialized equipment and knowledge required to manufacture and repair the Propaq, Protocol Systems, Inc. recommends that only Protocol's authorized repair facilities provide component-level repair. If repair by other than Protocol's authorized repair facilities is required, such a facility must have the necessary equipment to service and repair surface mount technology (SMT) electronics as well as the specialized equipment to service Propaq monitors. The Schematics & Drawings Set (orderable as 810-0334-10) and appropriate option section (SpO_2 PN 810-0334-20, Printer PN 810-0334-30, or CO_2 PN 810-0334-40) provides schematics, parts lists, etc. helpful in component-level servicing. Contact Protocol Systems, Inc. for more information.

Service Intervals

Table 2-1 lists recommended service intervals and procedures that should be considered in order to keep the monitor in good operating condition.

Table 2-1. Recommended Service Intervals/Procedures

Interval/Condition	Perform
Semi-annually	Complete Functional Verification and Safety Check (Section 2).
Minimum every three years	Replace lithium battery. Replace battery pack. Replace air filter.
Monitor is dropped, in an accident, or suspected rough handling.	Complete Functional Verification and Safety Check (Section 2).
Suspected malfunction with all or part of functions.	Functional Verification (Section 2) of suspected function(s).
Monitor fails Functional Verification.	Repair followed by Functional Verification (Section 2), and Calibration as required (Section 3).
Module has been replaced and monitor fails Functional Verification.	Repair followed by Functional Verification (Section 2), and Calibration as required (Section 3).
Every 5,000 hours of operation or whenever screen becomes difficult to view	Replace LCD backlight (LCD monitors only)

Functional Verification

The functional verification procedures verify proper operation of the monitor, oximeter, and printer. This procedure should be performed at intervals or conditions listed in Table 2-1.

Self Test

Many functions, such as alarms, waveform and scale sizing, and printer control, are software operations. Since system software is automatically checked during the monitor's power-up self-test, all software functions work normally if no error messages appear during the power-up sequence. (Some error messages indicate hardware failures.)

The Service Menus

Service Menus are provided to facilitate functional verification. The Service Menus (Figure 2-1) contain several functions for testing and verifying the Cuff channel, display, invasive pressure channel (models 104 and 106 only), and printer. During the functional verification procedure, the Service Menu functions will be accessed to perform necessary tests.

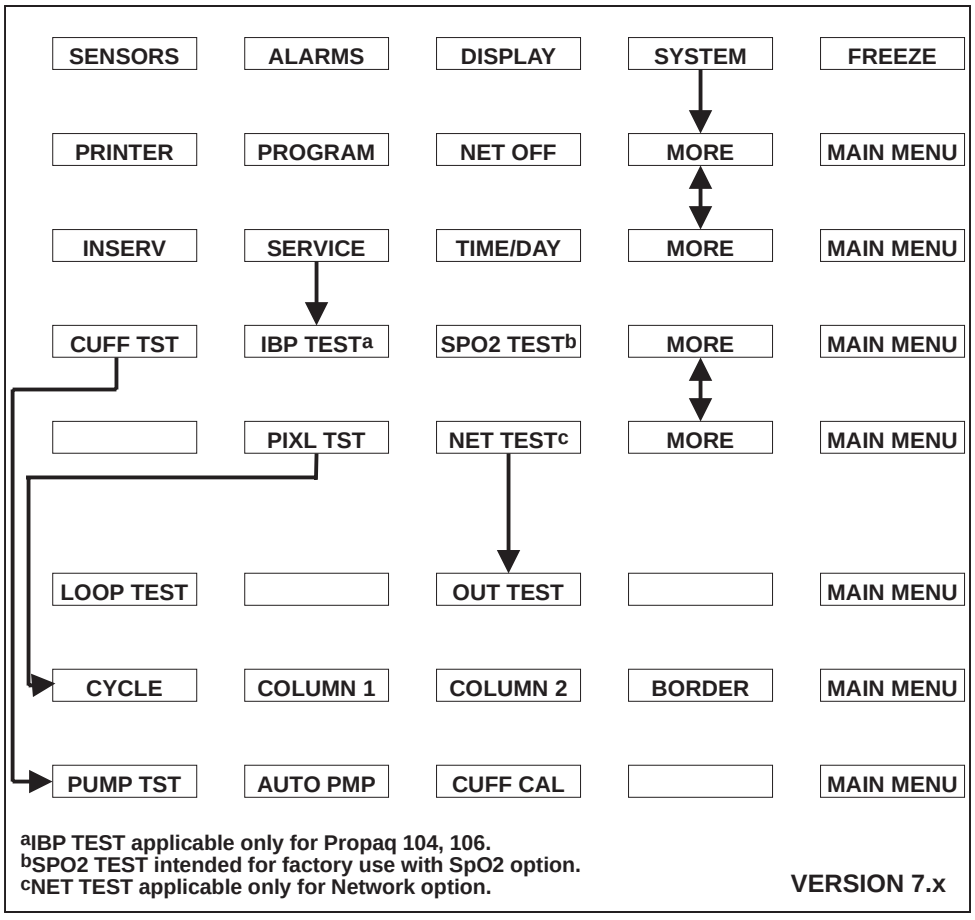

Fig. 2-1. The Service Menus, Version 7

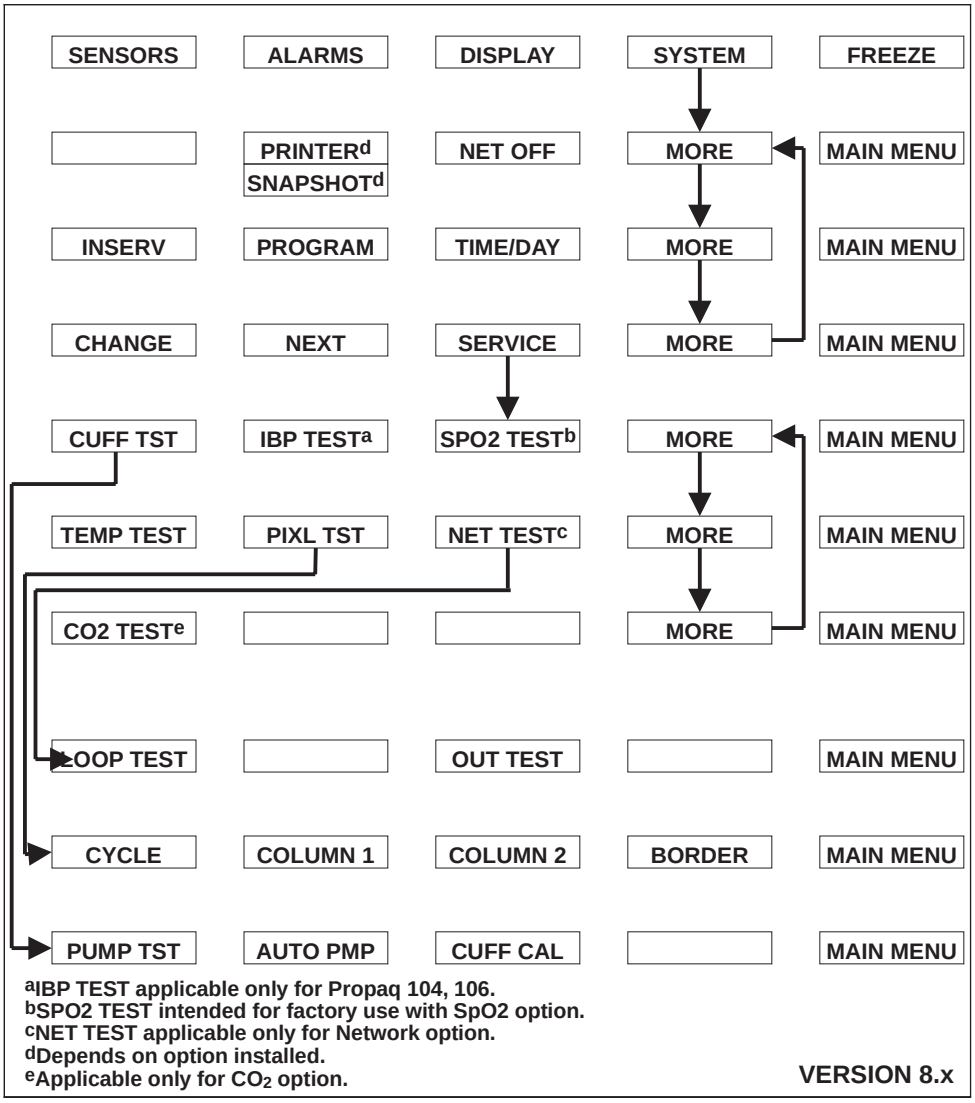

Fig. 2-2. The Service Menus, Version 8

Menu functions are accessed by pressing one or a series of buttons below menu labels on the monitor display. Button presses to access any function in the Propaq are shown in this manual with the > character separating the names of the buttons to be pressed. For example, SENSORS > ECG > LEAD means starting from the Main Menu, press the SENSORS button, then the ECG button, and finally the LEAD button.

The Service Menu is activated by pressing from the Main Menu (**Version 7.x** software) SYSTEM > MORE > SERVICE, or (**Version 8.x** software) SYSTEM > MORE > MORE > SERVICE.

NOTE

In the following procedures, where Version 8.x button presses differ from Version 7.x button presses, both versions are given. Otherwise, button presses are the same for both versions.

Equipment Required

Table 2-2 lists all the equipment needed to perform a functional verification. Some equipment can be manufactured. See Appendix A for information on manufacturable test equipment.

Table 2-2. Equipment Required for Functional Verification

Equipment Description
Mercury-column Manometer with Bulb (400 mmHg), Baumanometer 14-383 wall mount Manometer or equivalent
50 MHz Triggered Sweep Oscilloscope, Tektronix 2225 or equivalent
Variable DC Power Supply, 0-36 V, 3A, VIZ WP-715A or equivalent
Patient Simulators, Dynatech/Nevada 213A, 215A, or 217A with Temperature and EGG Cable/Leads
Electromedics 37° C Temperature Sensor Simulator (See Appendix A)
IBP Simulator, 5 μV/mmHg/volt, Fogg Systems BP48C, BP28, or MDE Datasim 6000 with IBP cables
Adult Cuff Kit, Protocol PN 008-0006-XX
Protocol Cuff Calibration Kit, Protocol PN 008-0012-XX
Power Supply Adapter Cables (See Appendix A)
Propaq AC Power Adapter North American, 120 V, 60 Hz, Protocol PN 503-0002-00 International, 220-240 V, 50-60 Hz, Protocol PN 503-0002-20 Japanese, 100 V, 50-60 Hz, Protocol PN 503-0002-30
Safety Analyzer, Dynatech/Nevada (formerly Neurodyne-Dempsey), 431F-1D or equivalent
Rod-L Model M100AVS5 High-Voltage Potential Tester, or equivalent
NELLCOR Pocket Tester, PT-2500
Test gas source: dry 4% to 10%* CO_2, balance air (with flow meter)
Two rubber test tube stoppers, with 1/8" to 1/4" vent holes opened through (for CO_2 tests)

*Gas may be between 4 and 10%, but exact CO_2 concentration must be certified within ±0.01%. See procedure later in this section for determining partial pressure.

Procedure

NOTE

If the monitor has been stored for longer than one month without the monitor connected to the ac adapter (for recharging), the battery voltage should be checked. The battery may need to be replaced if it cannot hold a charge.

The functional verification must be done only when the monitor is fully assembled. Equipment required to perform this procedure is shown in Table 2-2. Most items not commercially available can be made according to the information in Appendix A.

NOTE

If you plan to use a Dynatech/Nevada model 213A, 215A, or 217A Patient Simulator to simultaneously simulate ECG and invasive blood pressure, see Appendix B for important information.

If the monitor did not pass the functional verification, or when it is time to do a routine calibration, see the Calibration Procedure in Section 3.

Functional verification and safety checks must always be done after monitor disassembly or calibration, or whenever there is a question about the safety of the patient functions.

NOTE

Before starting the verification procedures, charge the battery for at least 8 hours with the monitor turned off. (Charge for 12 hours if a Printer or SpO_2 module is attached.)

Power System

The following steps check the integrity of the power system.

1. If the ac power adapter is not plugged in, plug it into an ac socket with the correct voltage and connect it to the monitor's right side panel dc power connector.
2. Check that the green **BATTERY CHARGING** indicator lights.
3. Disconnect the power adapter from the monitor. Check that the **BATTERY CHARGING** indicator turns off.

CAUTION

In the next steps, carefully check for the proper polarity of the connection between the power supply and the monitor. If voltage is applied with the wrong polarity, it will blow an internal fuse (F1 on the Recharger board). Refer to the diagram on the monitor's right side panel for proper polarity.

4. Turn on the dc power supply and set it for 15 V ±0.5 V.
5. Using the power supply adapter cable (constructed as shown in Appendix A), connect the power supply to the monitor's dc input connector on the right side panel.
6. Check that the **BATTERY CHARGING LED** indicator lights.
7. Check that the current draw from the supply is less than 650 mA.

NOTE

Initial charge current can be as high as 880 mA. However, as the battery charges, the current will decrease. A fully charged battery draws less than 100 mA. You should notice the current draw slowly drop the longer the dc supply is connected to the monitor.

8. Turn off the power supply.
9. Disconnect the supply from the monitor.

Button Tests

The following steps check the operation of the buttons.

1. Turn on the monitor.
2. Make sure that no error messages appear and the monitor correctly powers up.
3. With the Main Menu displayed
   a. press one of the buttons
   b. check that the menu changed
   c. press the MAIN MENU button
   d. repeat steps 3a through 3c until all buttons have been checked.
4. Make sure that the Main Menu is displayed when you are done.

Display

The following steps check the display.

1. Press MAIN MENU.
2. For **Version 8.x** software, press SYSTEM > MORE > MORE > SERVICE > MORE > PIXL TST > CYCLE to start the display tests (usually starts at COLUMN1).

   For **Version 7.x** software, press SYSTEM > MORE > SERVICE > MORE > PIXL TST > CYCLE.
3. Check that all pixels in the activated columns are turned on.
4. Press the left button to advance to the next test, COLUMN2.
5. Check that all pixels in the activated columns are turned on.
6. Press the left button to advance to the next test, BORDER.
7. Check that all pixels around the perimeter of the display are turned off.
8. Press any but the left button to stop the tests.
9. Press MAIN MENU.
10. .Press SYSTEM > MORE > TIME/DAY and check that the displayed time of day and date are correct. If they are not, correct them using the NEXT and UP or DOWN buttons and set them with the ENTER button.

    The clock should be accurate to ±2 seconds per day or ±1 minute per month. If the clock does not meet these specifications, complete the calibration of the Clock/Calendar listed in Section 3.

ECG Channel & Alarm Indicators

The following steps check the ECG channel and the alarm indicator drivers.

1. Connect the ECG channel to the patient simulator.
2. Set the simulator as follows:

   normal sinus rhythm
   80 beats per minute (bpm)
   1 mV amplitude

3. Set the monitor as follows (from the Main Menu, press the keys indicated in parentheses):

   Lead II (SENSORS > ECG > LEAD)
   1 mV ECG size (SENSORS > ECG > SIZE)
   25 mm/Sec sweep speed (SENSORS > ECG > mm/SEC)
   ALL ALARMS OFF (ALARMS > ALL ALRM)
   Version 7.x-♥Tone to LOW (DISPLAY > MORE > ♥TONE)
   Version 8.x-♥Tone to LOW (SENSORS > ECG > MORE > ♥TONE)

4. Check that a normal sinus rhythm ECG waveform is displayed with a peak-to-peak height equal to that of the reference pulse at the left side of the display (18 ±2 pixels high, after subtracting 1 pixel from the total for trace thickness). There should be a soft beep tone with each QRS event.

   NOTE

   The patient simulator recommended in Table 2-2 provides a 1mV output at Lead II. Other simulators may provide 1 mV at different leads. If you use a simulator other than the one recommended, check the simulator's specifications.

5. From the Main Menu, press (**V7.x**) DISPLAY > MORE > ♥TONE, or (**V8.x**) SENSORS > ECG > MORE > ♥TONE.
6. Check that the tone turned off.
7. Press ♥TONE twice more and check for high and medium tones.

   This affects only the heart beat tone. Alarm tones are not affected. Turn the tone off for the remainder of the functional verification.

8. Press MAIN MENU.
9. Check that the monitor′s heart rate display is 80 ±4 bpm.
10. Remove one ECG lead wire.

11. Check that an equipment alarm occurs. The **LEAD FAIL** message should accurately indicate the removed lead.
12. Disconnect one of the two remaining leads.
13. Check that an equipment alarm occurs with a **LEAD FAIL MULTIPLE** message.
14. Reconnect all leads.
15. Press MAIN MENU.
16. Check that the **ALARM(S) OFF** light is on.
17. Press ALARMS > STAT SET to automatically set heart rate alarm limits.
18. Set the simulator heart rate outside a heart rate alarm limit.
19. Check that an alarm violation occurs with the tone and **ALARM** light on.

NOTE

The alarm tone may be set to high, med or low through DISPLAY > MORE > MORE > NEXT (press until "alarm tone volume" function appears) > CHANGE.

20. Press ALL ALRM to turn off alarms.
21. Check that the tone turns off.
22. Press MAIN MENU.
23. Adjust the simulator heart rate to 80 bpm.
24. Set the simulator for PACED RHYTHMS, NON-FUNCTION.
25. If pacer indicator is not on, press SENSORS > ECG > MORE > PACER to turn on the pacer indicator.

    A dashed line between the heart rate numeric and waveform windows indicates the pacer indicator is on.

26. Check that a dashed vertical line is displayed on the ECG waveform each time a pacer pulse occurs.
27. Check that the heart rate numeric is displayed as three horizontal dashed lines.
28. Press MAIN MENU.

P1, P2 The following steps verify the operation of one invasive pressure channel (P1). Repeat the steps for checking P2 of a Propaq 106. If you are verifying a Propaq 102, skip this part of the procedure.

NOTE

Check that the P1 and P2 waveforms are turned on in the wave select window.

CAUTION

Many blood pressure simulators are not intended to be used as a calibration standard. The simulator you use should have an accuracy of at least 1%. Check your simulator's specifications.

NOTE

If you are using the Dynatech/Nevada model 213A, 215A, or 217A patient simulator, do not simultaneously monitor ECG and invasive blood pressure (IBP) unless the modification to the simulator is performed as described in Appendix B. If you do not wish to modify your simulator, use ECG and IBP independently.

1. Disconnect the ECG cable from the monitor.

   (Disconnecting an active channel initiates an equipment alarm.)

2. Press the DISABLE button to remove the alarm screen.

3 .Plug the pressure simulator into the monitor's P1 connector (use the P2 connector if verifying P2).

4. Set the simulator to 0 mmHg.

5. Check that P1 NOT ZEROED (or P2 NOT ZEROED) is displayed in the blood pressure numerics window.

   (The pressure scale does not appear until the pressure channel has been zeroed.)

6. Zero the pressure channel by pressing SENSORS > INV PRS > MORE > ZERO P1 (Press MORE twice to access ZERO P2).

7. Check that P1 ZEROED (or P2 ZEROED) is displayed.

8. Check that the mean pressure numeric is 0 mmHg ±2 mmHg.

9. Set the pressure simulator to 200 mmHg.

10. Check that the mean pressure numeric is 200 mmHg ±2 mmHg.

11. Set the pressure simulator to 0 mmHg.

12 .Press MORE > RESCALE.

13. Check that the displayed pressure waveform noise is no larger than 6 pixels p-p, after subtracting 1 pixel from the total for trace thickness.

14. Press MAIN MENU.

CUFF Channel

NOTE

In the following steps, the monitor's displayed pressure must be checked against a calibrated mercury-column manometer.

1. Connect the cuff, manometer with bulb, and the monitor together with the Cuff Calibration Kit. See Figure 2-3.
2. Wrap the adult cuff around a cylindrical object about the size of an adult's arm.
3. Press SYSTEM > MORE > (**V8.x** press MORE again) SERVICE > CUFF TST > CUFF CAL.

   The Propaq pneumatic components now prevent cuff air from flowing through the vent port to the atmosphere for a ten-minute period. If steps 4 through 9 take longer than ten minutes, simply press CUFF CAL again.
4. Close the valve on the bulb and squeeze the bulb to inflate the cuff to 250 mmHg as shown on the mercury-column manometer.
5. Check that the reading on the monitor's display is 250±4 mmHg.
6. Reduce the pressure to 100 mmHg and check that the displayed pressure is 100±2 mmHg.

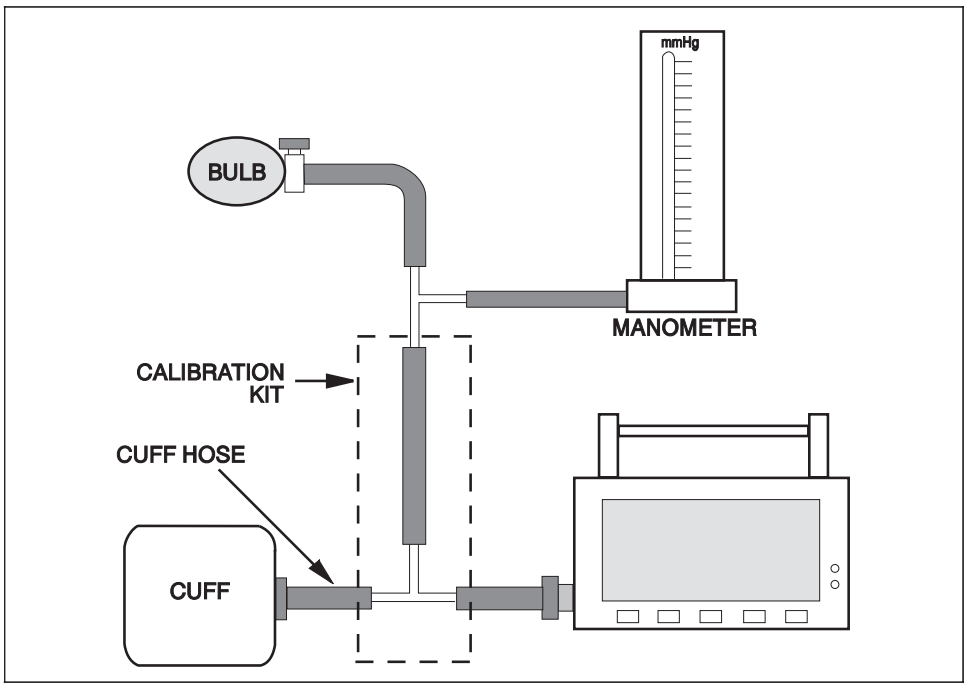

Fig. 2-3. Cuff Calibration Kit Attachments

7. Reduce the pressure to 0 mmHg and check that the displayed pressure is 0±2 mmHg. Close the bulb valve.
8. Press PUMP TST.
9. Check that the pump inflates the cuff to approximately 229 mmHg within 10 seconds.
10. Observe the leak rate display on the monitor screen. Check that the leak rate is less than 10 mmHg/min after one minute.
11. With the bulb valve closed, while observing the manometer, inflate the cuff until the monitor automatically vents the pressure.
12. Check that the manometer reading is approximately 260 mmHg when the pressure is vented.
13. Press MAIN MENU.
14. Disconnect the cuff and Cuff Calibration Kit.
15. Disable the equipment alarm by pressing DISABLE.

Temperature

NOTE

The Propaq 106 does not support Electromedics temperature probes. Steps 5 and 6 below do not apply to the Propaq 106.

1. Insert a YSI 400 Series calibrated temperature probe simulator into the T1 jack.
2. Check that T1 temperature is ±0.2°F (±0.1°C) of the calibration temperature.
3. Replace the YSI 400 simulator with a YSI 700 Series probe simulator.
4. Check that T1 temperature is ±0.2°F (±0.1°C) of the calibration temperature.
5. Insert an Electromedics 2100 Series calibrated temperature probe simulator into the T2 jack. (See Appendix A).
6. Check that the displayed temperature (T2) is ±0.2°F (±0.1°C) of the calibration temperature.

Battery Capacity Test

This procedure checks the capacity of the battery to ensure that it is capable of holding a charge.

NOTE

A new battery should pass the following test. The run time of older batteries will decrease proportionally with age. Replacement is recommended when the run time becomes insufficient for the monitor's application.

1. Use the ac power adapter and charge the monitor for at least 8 hours with the monitor turned off (12 hours if a printer or pulse oximeter is attached).
2. Disconnect the power adapter.
3. Set the monitor as follows: CUFF in manual mode.
4. Run the monitor for 8 hours.
5. Check that the monitor did not automatically turn off. (See Propaq Users Guide for a description of how the Propaq responds to falling battery voltage).
6. Use the ac power adapter and charge the monitor for at least 8 hours with the monitor turned off. (Charge at least 12 hours if an EMP or pulse oximeter is attached.)

SpO_2 Checks

The following steps check the operation of the pulse oximetry option (SpO_2).

1. Disconnect all test cables from the monitor's patient channel connectors. (It is not necessary to disconnect the cuff hose.)
2. Connect the NELLCOR SpO_2 test fixture to the Propaq's D-type connector.

   The test fixture has no on/off switch. It automatically turns on with the monitor power.
3. Turn off all alarms by pressing ALARMS > ALL ALRM from the Main Menu.
4. Press MAIN MENU.
5. Turn on the SpO_2 waveform in the wave select window (DISPLAY > MORE > WAVE SEL).

6. Check that the SpO_2 numeric is 81 ±2.
7. Check that the pulse rate is 40 ±3.
8. Check that the waveform shape is similar to Figure 2-4.
9. Check that the speaker is sounding with every pulse indicated on the display.
10. Check that the speaker volume changes according to the ♥TONE setting (**V7.x**-DISPLAY > MORE > ♥TONE; **V8.x**-SENSORS > ECG > MORE > ♥TONE).
11. Disconnect the SpO_2 test fixture from the Propaq.
12. Check that an equipment alarm occurs.
13. Press SUSPEND.

NOTE

The following steps require a suitable ECG/SpO_2 simulator to provide a synchronized ECG and SpO_2 signal. Instead of a simulator, you can connect ECG electrodes to yourself and use a NELLCOR sensor on your finger.

14. Provide synchronized ECG and SpO_2 signals to the Propaq.
15. Press SENSORS > MORE (if necessary) > SpO_2 > MORE > C-LOCK until C-LOCK is turned ON.
16. Check that the SpO_2 signal and ECG signals appear normal and "normal" readings appear on the monitor.
17. Unplug the ECG connector from the Propaq.
18. Check that the NO C-LOCK message alternates with the time of day.
19. Disconnect all cables from the Propaq.

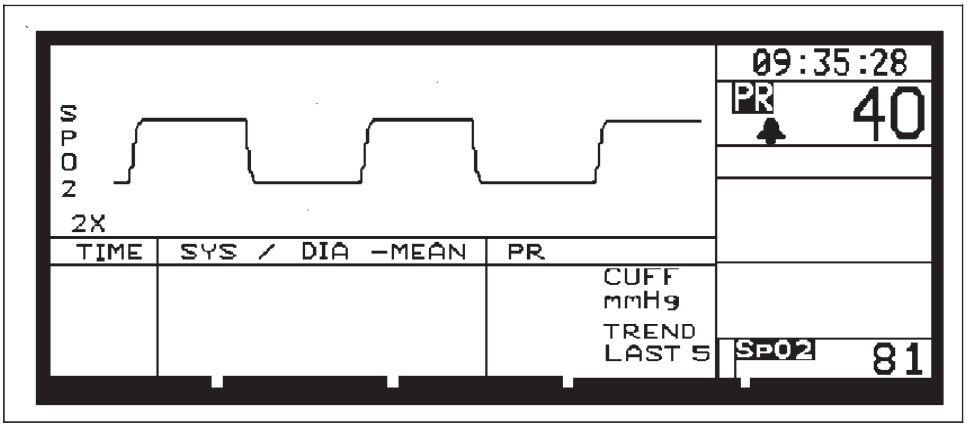

Fig. 2-4. SpO2 Waveform Shape

Printer Tests

The following steps check the functionality of the printer.

NOTE

Functional verification should be performed on the monitor before beginning the printer tests. The monitor must be functioning properly in order to perform printer tests.

1. Turn on the monitor and check that the green LED on the printer's front panel lights after 2 to 3 seconds.
2. Connect the patient simulator to the monitor.
3. Set the patient simulator for ECG, normal sinus rhythm.
4. Check that the monitor displays a normal ECG signal.
5. Press and hold in the printer's PAPER FEED button.

   Paper should feed out the side of the printer as long as the button is held in.
6. Release the PAPER FEED button.
7. Press the printer's SNAPSHOT button.

   The printer should print an eight-inch strip of a normal ECG wave form. The paper should stop only after the entire waveform has been fed out of the printer.
8. Press the printer's START/STOP button.

   The printer should begin printing a normal ECG waveform without stopping.
9. Press the START/STOP button to stop printing.
10. Press the START/STOP button to start printing.

11. Lay the Propaq on its back while the printer is printing.
12. Completely open the paper door on the bottom of the Expansion Module.
13. Check that the printer stops printing, that the green LED is not lit, and that an equipment alarm and CHECK DOOR message appear on the monitor screen.
14. Cut the printer paper from the roll, leaving a strip of paper in the printer mechanism.
15. Close the paper door and set the monitor upright.
16. Press the START/STOP button.
17. After the printer runs out of paper, check that the green LED is not lit and that an equipment alarm and PAPER OUT message appear on the monitor screen.
18. Open the printer door and replace the end of the paper roll in the printer.
19. Close the paper door and set the monitor upright.
20. Check that the green LED lights.
21. Press and hold in the printer's PAPER FEED button and then press the START/STOP button.
22. Check that a test printout similar to Figure 2-5 is printed.
23. Turn off the monitor and simulator, and disconnect the simulator from the monitor.

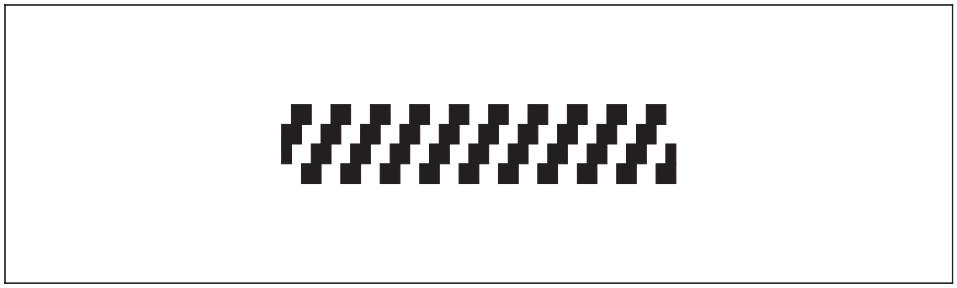

Fig. 2-5. Printer Test Printout.

CO_2 Functional Verification

This procedure verifies CO_2 accuracy. If the verification test results are within specifications, board calibration is not required.

Functional verification and calibration procedures require calculations of local barometric pressure and partial pressure of the test gas source (in mmHg) to compare to Propaq displayed values.

Determine Local Barometric Pressure

1. Determine local altitude above sea level. For worldwide locations, obtain altitude from local geological maps (U.S.G.S. maps in the United States) or other local references. Refer to Table 2-3 to determine local uncorrected pressure (LUP) for established altitude.

2. Determine ATIS reported pressure (inches or millimeters of Hg).

   For U.S. locations, consult local telephone directories to obtain the Automated Terminal Information Service (ATIS) number, which is typically listed under United States Government Offices, Department of Transportation, Federal Aviation Administration, Air Traffic Control Towers. Among various statistics reported is the "altimeter", which is given in four integers. The four digits represent the barometric pressure as referred to sea level, in units of inches of mercury, with an assumed decimal point occurring between the second and third numbers.

   For worldwide locations, equivalent altimeter statistics, in millimeters of mercury, may be obtained from local agencies.

   NOTE

   The difference in altitude between the calibration site and the ATIS site should not be greater than 30 m or 100 ft.

3. Determine local barometric pressure using LUP and ATIS. Apply the ATIS and LUP values to the following formula to calculate the local barometric pressure (mmHg):

   Local Barometric Pressure =
   0.033421 · LUP · ATIS **(ATIS in inches of mercury)**
   0.00131579 · LUP · ATIS**(ATIS in millimeters of mercury)**

EXAMPLE 1:

Step 1: The user's altitude is 5000 feet. The LUP from Table 2-3 is 632.35.
Step 2: The reported ATIS is 30.09 ("Altimeter: three zero zero niner.")
Step 3: Multiply 632.35 (LUP) times 30.09 (ATIS) times 0.033421
Local Barometric pressure = 635.92 mmHg

EXAMPLE 2:

Step 1: The user's altitude is 1000 meters. The LUP from Table 2-3 is 674.11
Step 2: The reported ATIS is 764.29 mmHg.
Step 3: Multiply 674.11 (LUP) times 764.29 (ATIS) times 0.00131579
Local Barometric pressure = 677.92 mmHg

Determine Partial Pressure of Test Gas Source

Determine the partial pressure of test gas source. Multiply the local barometric pressure as determined in step 3 times the certified percentage (±.01% accuracy) of the test gas.

EXAMPLE:

Step 1: The local barometric pressure as calculated in step 3, Example 1 is 635.92
Step 2: The certified CO_2 gas percentage is 5.00%.
Step 3: Determine CO_2 partial pressure. Multiply 635.92 times 0.0500
CO_2 partial pressure = 31.8 mmHg

Table 2-3. Local Uncorrected Barometric Pressure as a Function of Altitude

Altitude (Feet)	Pressure (mmHg)	Altitude (Feet)	Pressure (mmHg)	Altitude (Feet)	Pressure (mmHg)	Altitude (Feet)	Pressure (mmHg)
-2000	816.56	1000	732.93	4000	656.38	10000	522.65
-1900	813.66	1100	730.27	4200	651.52	10333	515.93
-1800	810.76	1200	727.62	4400	646.68	10667	509.26
-1700	807.87	1300	724.97	4600	641.88	11000	502.69
-1600	804.99	1400	722.33	4800	637.10	11333	496.18
-1500	802.11	1500	719.70	5000	632.35	11667	489.72
-1400	799.25	1600	717.07	5200	627.64	12000	483.34
-1300	796.39	1700	714.46	5400	622.95	12333	477.04
-1200	793.54	1800	711.85	5600	618.28	12667	470.78
-1100	790.70	1900	709.25	5800	613.65	13000	464.60
-1000	787.87	2000	706.65	6000	609.04	13333	458.50
-900	785.05	2100	704.07	6200	604.47	13667	452.44
-800	782.23	2200	701.49	6400	599.92	14000	446.46
-700	779.42	2300	698.92	6600	595.40	14333	440.55
-600	776.62	2400	696.36	6800	590.90	14667	434.68
-500	773.83	2500	693.80	7000	586.44	15000	428.89
-400	771.05	2600	691.26	7200	582.00	15333	423.17
-300	768.28	2700	688.72	7400	577.58	15667	417.49
-200	765.51	2800	686.18	7600	573.20	16000	411.89
-100	762.75	2900	683.66	7800	568.84	16333	406.35
0	760.00	3000	681.14	8000	564.51	16667	400.86
100	757.26	3100	678.63	8200	560.21	17000	395.44
200	754.52	3200	676.13	8400	555.93	17333	390.08
300	751.80	3300	673.64	8600	551.68	17667	384.76
400	749.08	3400	671.15	8800	547.45	18000	379.52
500	746.37	3500	668.67	9000	543.26	18333	374.34
600	743.67	3600	666.20	9200	539.08	18667	369.20
700	740.97	3700	663.73	9400	534.94	19000	364.13
800	738.28	3800	661.27	9600	530.82	19333	359.12

Table 2-3. (Cont) Local Uncorrected Barometric Pressure as a Function of Altitude

Altitude (Feet)	Pressure (mmHg)	Altitude (Feet)	Pressure (mmHg)	Altitude (Feet)	Pressure (mmHg)	Altitude (Feet)	Pressure (mmHg)
900	735.61	3900	658.82	9800	526.72	19667	354.15
1000	732.93	4000	656.38	10000	522.65	20000	349.24

Altitude (Meters)	Pressure (mmHg)	Altitude (Meters)	Pressure (mmHg)	Altitude (Meters)	Pressure (mmHg)	Altitude (Meters)	Pressure (mmHg)
-700	825.23	1000	674.11	2700	546.23	4400	438.74
-650	820.43	1050	670.03	2750	542.79	4450	435.86
-600	815.65	1100	665.98	2800	539.37	4500	432.99
-550	810.89	1150	661.94	2850	535.96	4550	430.14
-500	806.15	1200	657.92	2900	532.58	4600	427.31
-450	801.43	1250	653.92	2950	529.21	4650	424.49
-400	796.74	1300	649.94	3000	525.85	4700	421.69
-350	792.07	1350	645.98	3050	522.52	4750	418.90
-300	787.43	1400	642.04	3100	519.20	4800	416.12
-250	782.80	1450	638.12	3150	515.90	4850	413.36
-200	778.20	1500	634.22	3200	512.62	4900	410.62
-150	773.61	1550	630.34	3250	509.35	4950	407.89
-100	769.05	1600	626.48	3300	506.10	5000	405.18
-50	764.52	1650	622.63	3350	502.87	5050	402.48
0	760.00	1700	618.81	3400	499.65	5100	399.79
50	755.51	1750	615.00	3450	496.45	5150	397.12
100	751.03	1800	611.22	3500	493.27	5200	394.46
150	746.58	1850	607.45	3550	490.10	5250	391.82
200	742.15	1900	603.70	3600	486.95	5300	389.19
250	737.74	1950	599.97	3650	483.82	5350	386.58
300	733.35	2000	596.26	3700	480.70	5400	383.98
350	728.99	2050	592.57	3750	477.60	5450	381.39
400	724.64	2100	588.89	3800	474.51	5500	378.82
450	720.32	2150	585.24	3850	471.44	5550	376.27
500	716.01	2200	581.60	3900	468.39	5600	373.72
550	711.73	2250	577.98	3950	465.36	5650	371.20
600	707.47	2300	574.38	4000	462.33	5700	368.68
650	703.23	2350	570.80	4050	459.33	5750	366.18
700	699.01	2400	567.24	4100	456.34	5800	363.69
750	694.81	2450	563.69	4150	453.37	5850	361.22
800	690.63	2500	560.16	4200	450.41	5900	358.76
850	686.47	2550	556.65	4250	447.47	5950	356.31
900	682.33	2600	553.16	4300	444.54	6000	353.88
950	678.21	2650	549.68	4350	441.63	6050	351.46
1000	674.11	2700	546.23	4400	438.74	6100	349.05

Functional Verification Procedure

This procedure verifies CO_2 accuracy. If the verification test results are within specifications, board calibration is not required. If verification test results exceed specification limits, calibration as instructed in Section 3 MAY or MAY NOT be required-see Table 2-4 for possible sources of errors in testing. Before proceeding to calibration, check test parameters as indicated in Table 2-4 to minimize errors.

1. Connect a CO_2 sensor with airway adapter to the Propaq CO_2 input connector.

2 .Power the Propaq on and use the menu keys to disable the patient alarms. Set the CO_2 measurement UNITS to millimeters of mercury (mmHg).

3. Allow the monitor and sensor to warm up for a minimum of 15 minutes.

NOTE

Possible errors may be caused if the area has high background CO_2 levels or if CO_2 has been forced outside of the airway adapter and into the sensor itself. To reduce background CO_2 level, the area should be well ventilated and, preferably, the technician should be the only person present. If CO_2 has been forced into the sensor, allow 24 to 48 hours for the CO_2 to dissipate.

4. After 15 minutes, check the CO_2 reading (of ambient room air) on the Propaq display to be 1 mmHg, ±1 mmHg.

5. Procure two standard rubber test-tube stoppers and open a 1/8" to 1/4" hole through each. Install the stoppers into each end of the sensor airway adapter. Via the tubing/fitting combination, connect the CO_2 gas source through the hole in the stopper on one end of the airway adapter. Leave the hole in the stopper on the other end of the airway adapter open.

NOTE

Before performing steps 6 and 7, convert the percentage of the gas source to partial pressure (mmHg) as instructed earlier in this section.

6. Introduce a flow of test CO_2 at a rate of 60 to 200 ml/min into the sensor airway adapter.

7. For test gas calculated partial pressure values of 30 mmHg or less, check the CO_2 reading on the Propaq display to be within 3 mmHg. For test gas calculated partial pressure values greater than 30 mmHg, check the CO_2 reading on the Propaq display to be within ±10% of the partial pressure value.

NOTE

If CO_2 test results are out of specification limits, refer to Table 2-4 for possible error sources. Verify test setup to minimize errors.

Table 2-4. Possible Sources of CO_2 Verification Test Errors

Error	Specification or Possible Cause of Error	Correction
Incorrect/unknown calibration gas concentration	4 to 10%, certified to within ±0.01%	Verify gas supply. Gas may be between 4 and 10%. Once known, convert percentage to partial pressure (mmHg) as instructed earlier in this section
Barometer calibration error	Known to within 3 mmHg	Determine ATIS, LUP, local altitude values and calculate local barometric pressure. Calibrate Propaq MSP board (see Section 3)
Insufficient/excessive gas flow rate	Between 60 and 200 ml/min	Verify with flow meter
Excessive back pressure in cuvette	Back pressure should not exceed 1 mmHg	Connect gases as instructed in verification test
Air mixed with standard gas		Check integrity of test setup
Gas temperature	Gas temperature entering airway adapter should be at room temperature	Store gas at room temperature
Cuvette error	Results should not vary more than 0.5 mmHg due to cuvette tolerances	Use other cuvette (airway adapter)
Thermal equilibrium error	Sensor not warmed up	Allow sensor/system to operate in a 15 minute warm-up period
High CO_2 reading with sensor subject to room air only	CO_2 forced outside of airway adapter into sensor. This is possible during demonstration if exhaled gases are blown through hands cupped around cuvette and exhaled gases are forced into sensor	Contain exhaled breath through the inside of cuvette only. Do not allow gases to be forced outside of cuvette and into sensor housing. If CO_2 has been forced into sensor, allow 24 to 48 hours for the CO_2 to dissipate

The following safety tests should be performed after any servicing which requires opening the monitor.

Patient Isolation Safety Checks

Patient Leakage (Risk) Current Test

Check leakage currents using a Dynatech/Nevada (formerly Neurodyne-Dempsey) 431F-1D Safety Analyzer or its equivalent. The source current should not exceed 10 μA rms. The sink current, measured between the isolated patient connections (ECG) and the dc power input connector of the monitor, should not exceed 20 μA rms. See the analyzer's operator's manual for the proper safety check procedure. Table 2-5 lists the proper connections between the monitor, power adapter, and the safety analyzer for each test. Note: because of the all-insulated construction of the monitor, the Enclosure Leakage Current Test to ground is not performed.

Table 2-5. Electrical Connections for Patient Leakage (Risk) Current Safety Tests

Safety Test	Power Adapter	Monitor Dc Input	Monitor Cable	Safety Analyzer
Source Current	Plugged into Analyzer Outlet	Connected to Power Adapter	RA LA LL	RA LA LL
Sink Current	Not Used	Connected to Ground Connector on Analyzer	RA LA LL	RA LA LL

Dielectric Strength (Hi-Pot) Test

Because of the close spacings of the monitor's internal components and the critical positioning of sheet insulation within the monitor, Protocol Systems recommends that a dielectric strength test be performed following any procedure in which the monitor is opened.

This test requires specialized equipment which may not be available at hospital repair facilities. If that is the case, Protocol Systems, Inc., will perform the safety test for a nominal charge with one-day turnaround. See **Repair and Upgrade Support at the beginning of this Section.**

WARNING

The Hi-Pot test is extremely hazardous. Only qualified service personnel should perform this test. Conduct the test only on an insulated table top, away from other persons and equipment.

Use a Rod-L Model M100AVS5 High-Voltage Potential Tester, or equivalent. See the Model M100AVS5 manual for operating information and safety recommendations.

1. Set the high voltage potential of the tester to one of the values specified in Table 2-6.
2. Connect the high-voltage output lead of the tester to the ECG leads, using a dedicated patient cable reserved for use only in such tests.
3. Connect the tester's chassis-connected return lead to the monitor's dc input connector, using a suitable plug.
4. Apply the test voltage for one second. The tester must not indicate dielectric breakdown.

WARNING

If any dielectric breakdown occurs, do not use the monitor. All internal sheet insulation barriers must be properly installed. Check the monitor to determine the cause of dielectric breakdown; then repair the monitor or return the monitor to Protocol Systems for repair.

Table 2-6. Summary of Connection Points and High-Voltage Test Potentials

Tester's High-Voltage Terminal Connection	Tester's Grounded Return Connection	High-Voltage Test Potential	Time Duration of Test
All ECG Leads on Patient Cable, Connected Together	Shell of Monitor's Dc Power Input Connector	4,000 V ac rms	1 Second

Section 3

Calibration

Introduction

This section provides a calibration procedure that allows you to calibrate the Propaq 100-series monitor to factory specifications. Calibration procedures should be performed only by qualified service personnel.

These procedures should be performed whenever necessary as indicated in Table 3-1. See Section 2 for the functional verification procedure.

Table 3-1. Recommended Calibration Intervals

Interval/Condition	Perform
Semi-annually	Complete Functional Verification and Safety Check
Monitor is dropped, in an accident, or suspected rough handling.	Complete Functional Verification and Safety Check.
Suspected malfunction with all or part of functions.	Functional Verification for suspected function(s).
Monitor fails Functional Verification.	Repair followed by Functional Verification and Calibration as required.
Module has been replaced and monitor fails Functional Verification.	Repair followed by Functional Verification and Calibration as required.
Every three months	Check the calibration of the CO_2 sensor.

NOTE

Protocol Systems recommends that both a patient leakage (risk) current test and a dielectric strength test be performed following any procedure which requires opening the monitor. These two tests are described at the end of Section 2.

Equipment Required

Table 3-2 lists all the equipment needed to perform a complete calibration including the functional verification procedure in Section 2, *Installation and Service*. Some equipment can be manufactured. See Appendix A for information on manufacturable test equipment.

Table 3-2. Equipment Required—Calibration and Functional Verification

Description	Functional Verification	Calibration
DMM, 4 1/2 Digit, Fluke 8050A or equivalent		X
Mercury-column Manometer with Bulb (400 mmHg), Baumanometer 14-383 wall-mount Manometer or equivalent	X	X
50 MHz Triggered Sweep Oscilloscope, Tektronix 2225 or equivalent	X	X
Frequency Counter, Beckman UC-10 or equivalent		X
Variable DC Power Supply, 0-36 V, 3A, VIZ WP-715A or equivalent	X	X
Patient Simulators[a], Dynatech/Nevada 213A, 215A, or 217A with Temperature and ECG Cable/Leads	X	X
Electromedics 37° C Temperature Sensor Simulator (See Appendix A)	X	X
IBP Simulator, 5 µV/mmHg/volt, Fogg Systems BP48C, BP28, or MDE Datasim 6000 with IBP cables	X	X
Battery Substitution Plugs (See Appendix A)		X
Battery Temperature Sensor Substitution Plug (See Appendix A)		X
Adult Cuff Kit, Protocol PN 008-0006-00	X	X
Protocol Cuff Calibration Kit, Protocol PN 008-0012-00	X	X
Protocol Analog Output Cable, Protocol PN 008-0017-00		X
Defib Sync Mating Connector, Miniature Circular DIN, 6-pin Male, Amphenol 750206-3, or equivalent		X
Defib Sync Marker In Pulse Source (See appendix A)		X
Power Supply Adapter Cables (See Appendix A)	X	X
Propaq AC Power Adapter (Protocol Part Numbers) North American, 120 V, 60 Hz, 503-0002-00 International, 220-240 V, 50-60 Hz, 503-0002-20 Japanese, 100 V, 50-60 Hz, 503-0002-30	X	
Safety Analyzer, Dynatech/Nevada (Neurodyne-Dempsey), 431F-1D or equivalent	X	
Rod-L Model M100AVS5 High-Voltage Potential Tester, or equivalent	X	
Non-Conductive Screwdriver		X
NELLCOR Pocket Tester, PT-2500	X	
RS-423 Loopback Test Fixture (See Appendix A)		X
Test gas source: dry 4 to 10% CO_2, balance air. Exact CO_2 concentration must be certified to ±.01%. Convert percentage to partial pressure (mmHg); see Section 2	X	
Two rubber test tube stoppers, with 1/8" to 1/4" vent holes opened through (for CO_2 tests)	X	

[a]Do not simultaneously monitor ECG and IBP. See Appendix B.

The Service Menus

For added convenience while performing functional verification and adjustment procedures, Propaq monitors provide easy-to-use Service Menus (Figure 3-1). Service Menu selections activate software-controlled tests and functions. Using these functions and the instructions in this manual, a complete calibration of the monitor can be accomplished in little time. The Service Menu is accessed through the Propaq menu system.

The Service Menus (Figures 3-1 and 3-2) contain several functions for testing and verifying the Cuff channel, display, invasive pressure channel (models 104 and 106 only), and printer. During the procedures in this manual, the Service Menu functions will be accessed to perform necessary tests.

Accessing Functions

Menu functions are accessed by pressing one or a series of buttons below menu labels on the Propaq display. Button presses to access any function in the Propaq are shown in this manual with the > character separating the names of the buttons to be pressed. For example, SENSORS > ECG > LEAD means starting from the Main Menu, press the SENSORS button, then the ECG button, and finally the LEAD button.

The Service Menu is activated by pressing from the Main Menu (**Version 7** software, Fig. 3-1) SYSTEM > MORE > SERVICE, or (for **Version 8** software, Fig. 3-2) SYSTEM > MORE > MORE > SERVICE.

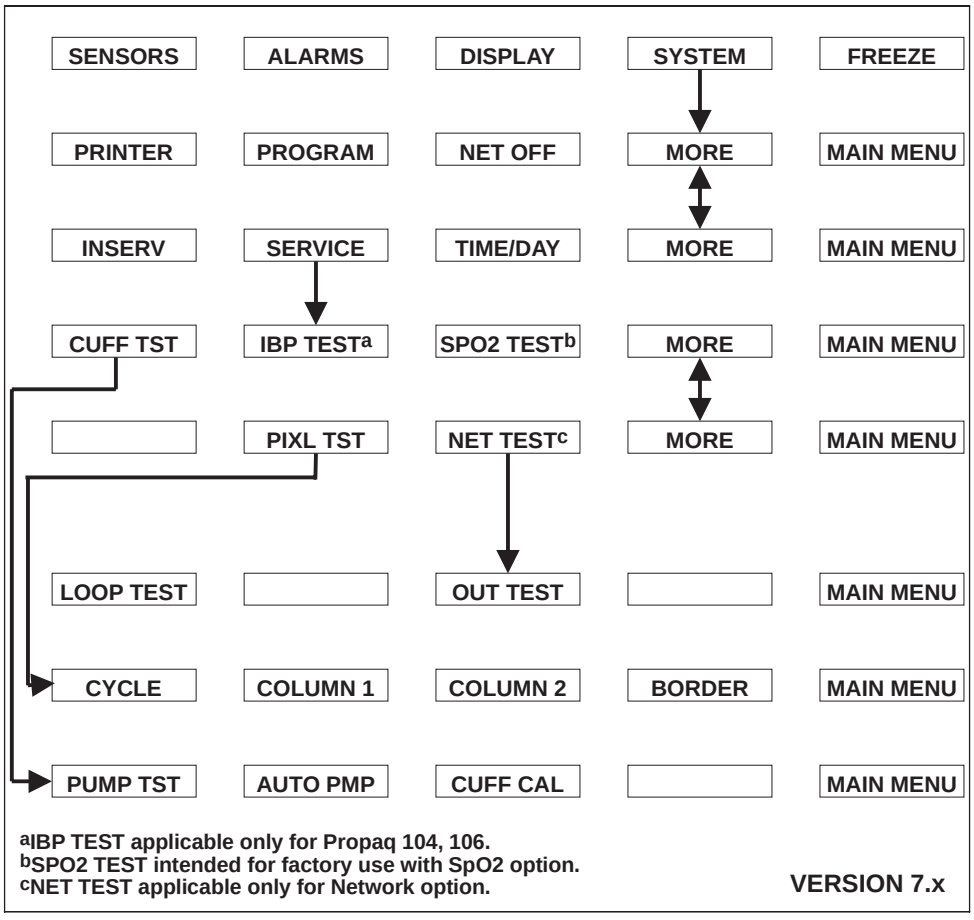

Fig. 3-1. The Service Menus, Version 7

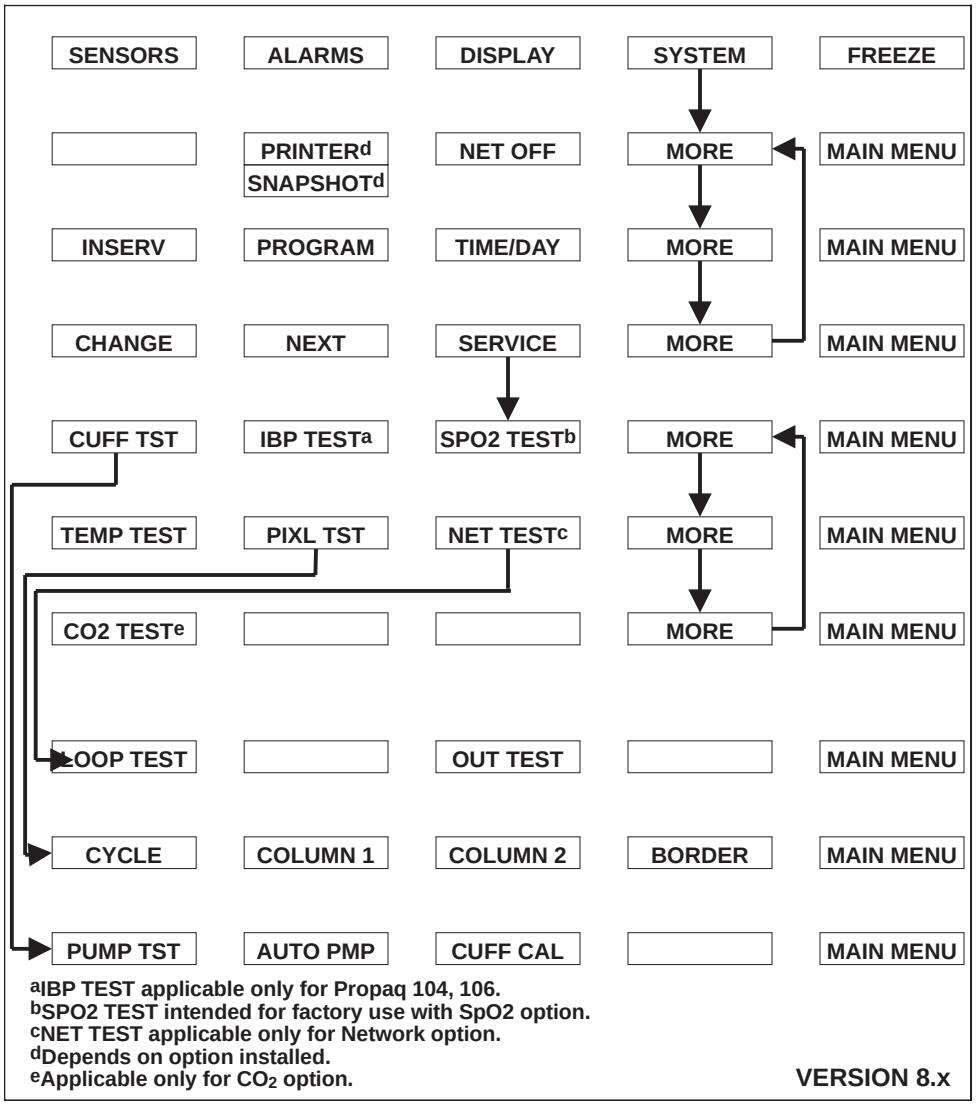

Fig. 3-2. The Service Menus, Version 8

Calibration Procedure

The following calibration procedure is provided to ensure that the monitor performs according to Protocol's specifications. After you complete this calibration procedure, you must also perform the functional verification procedure in Section 2.

The following calibration procedure includes checks and adjustments of the recharger and power supply, invasive pressure channel, non-invasive blood pressure channel (cuff), and the time of day clock. Verification of proper circuit and channel operation of other channels is performed according to the **Functional Verification** procedures in Section 2.

See Table 3-1 for information on service intervals.

See Table 3-2 for a list of the required test equipment for calibration. Some of the test fixtures listed can be manufactured. See Appendix A.

Instructions for opening and closing the monitor's case are provided in Section 5.

NOTE

Before performing this calibration procedure, charge the monitor for at least 8 hours with the monitor turned off.

CAUTION

Make sure calibration is performed at a static-protected work station. Static discharge can damage components in the Propaq monitor.

Setup

1. Make sure the battery pack is fully charged.
2. If an EMP or pulse oximetry option is attached to the monitor, remove it prior to calibration (see Section 5)—these options are tested in the **Functional Verification**, Section 2. The following procedures are for the Propaq monitor only.
3. Disconnect the ac power adapter from the monitor's side panel connector.

CAUTION

As you open the monitor in the next step, be sure to disconnect the tubing from the pressure transducer to prevent the tubing from tearing. See Section 5.

4. Open the monitor case as described in Section 5.
5. In EL display instruments, disconnect P6 display interconnect cable and install the extension cable (850-0187-00). (LCD display monitors have a different cable to a modified P6, and need no extension.)

NOTE

In all the following procedures, the alarms should first be disabled by pressing ALARMS > ALL ALRM. This prevents alarms from being activated as you make adjustments.

Recharger Board

WARNING

High Voltages (approximately ±200 V dc or 360 V ac) are present on the recharger board when the monitor power is turned on. These voltages could present a shock hazard if contacted during calibration.

NOTE

Although Figures 3-3 and 3-4 show views of the EL version of the recharger board, references made to the locations of connectors, test points, and adjustments apply also to the LCD version.

1. Refer to Figure 3-3 and disconnect the battery connector from P4 on the Recharger Board.
2. Connect the 91Ω Battery Substitution Plug (see Table 3-2) to P4.

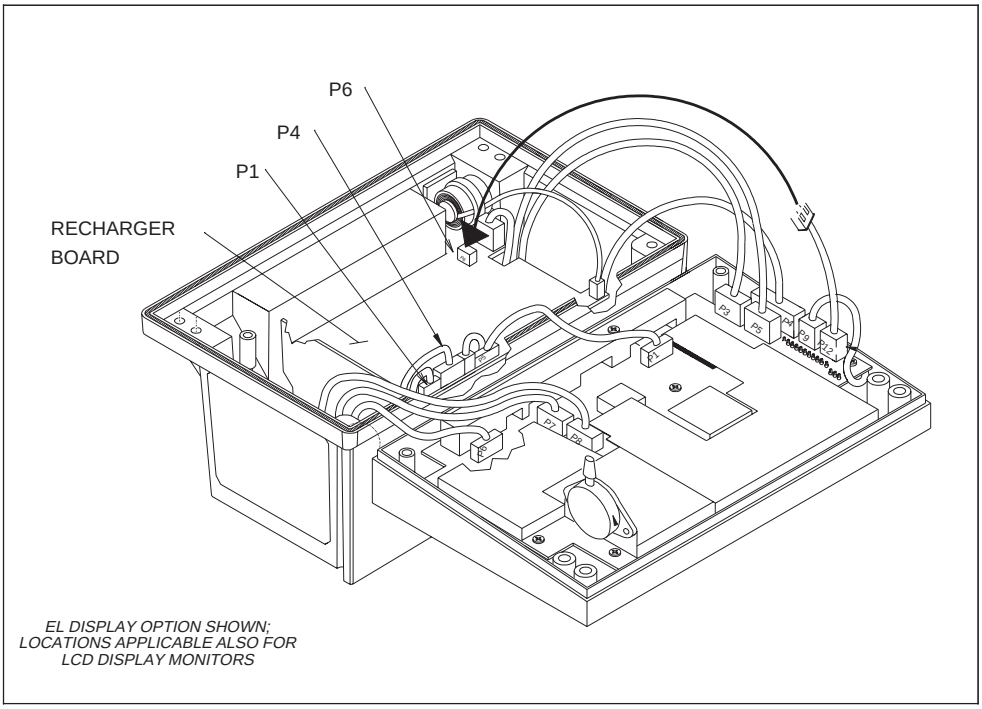

Fig. 3-3. Locations of P1, P4, and P6, Recharger Board

3. Refer to Figure 3-3 and disconnect the temperature sensor connector from P1 on the Recharger Board.
4. Connect the temperature sensor simulator to P1 (see Table 3-2).
5. Turn on and set the variable dc power supply to 17.0 ±0.1 V.

NOTE

Adjustment of RP3 in step 14 below sets an overvoltage limit which, if misadjusted, can cause fuse F1 to open. If RP3 adjustment has been tampered with, adjust fully clockwise before connecting power to the dc input jack on the Propaq. Proceed with the following calibration, including step 14 which properly sets the overvoltage limit.

6. Using the power supply adapter cable (see Table 3-2), connect the variable dc power supply to the monitor's dc input connector.
7. Check that the **BATTERY CHARGING** indicator LED lights. Verify that the Propaq power switch is off.
8. Check that the current draw from the variable dc power supply is not more than 130 mA.
9. Set the DMM for a voltage measurement of up to 10 V dc.
10. Connect the DMM's positive lead to TP1 (Figure 3-4).
11. Connect the DMM's reference lead to ground at TP2 (Figure 3-4).

12. Adjust RP2 (Figure 3-4) for a DMM reading of 9.40 V ±10 mV.
13. Refer to Figure 3-4 and move the DMM's positive lead to U4-8 (the test pad located near pins 4 and 5).
14. Adjust RP3 (Figure 3-4) for a DMM reading of 2.393 V ±10 mV. Use care not to adjust this control beyond the specified voltage; fuse F1 may open.
15. Disconnect the DC input from the monitor's right side panel.
16. Replace the 91Ω battery substitution plug with the 11Ω plug.
17. Reconnect the 17.0 V supply to the monitor.
18. With the DMM reference lead on TP2, connect the + lead to TP1.
19. Adjust RP4 (Figure 3-4) for a DMM reading of 9.35 V ±10 mV.
20. Disconnect the DMM leads from monitor.
21. Slowly raise the variable dc power supply voltage to 32 V while checking that the **BATTERY CHARGING LED** indicator remains on.
22. Slowly reduce the variable dc power supply voltage to 10.3 V while checking that the **BATTERY CHARGING LED** indicator remains on.
23. Slowly reduce the variable dc power supply voltage until the **BATTERY CHARGING LED** indicator turns off.
24. Check that the variable dc power supply voltage is between 8.0 V and 10.3 V.

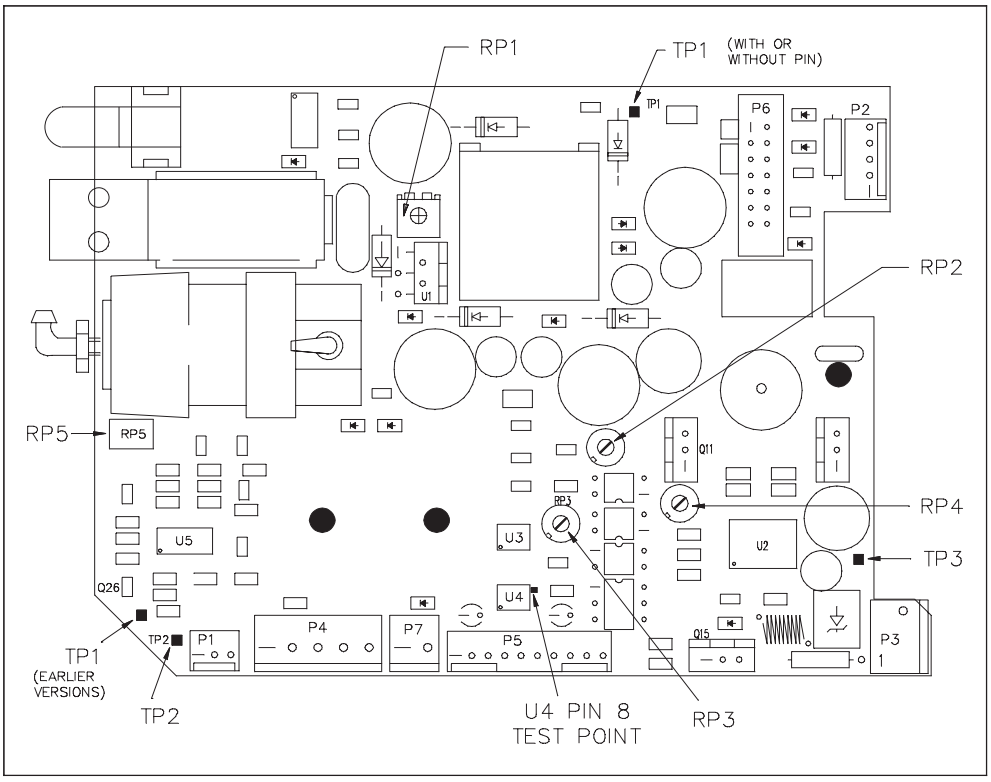

Fig. 3-4. Recharger Board Test Points and Adjustments

25. Disconnect the variable dc power supply from the monitor.
26. Disconnect the substitution plugs from P1 and P4.
27. Reconnect the temperature sensor cable to P1.
28. Using the DMM, measure the battery voltage between pins 1 and 2 of the battery cable previously connected to P4 (see Figure 3-3).

    The battery voltage should be 7.0 to 9.4 V.

CAUTION

When reconnecting the battery cable in the next step, make sure the plug is properly oriented and aligned onto connector P4. Improper orientation and alignment can cause immediate damage to the Recharger Board.

29. Carefully reconnect the battery cable to P4.
30. Adjust the variable dc power supply to 17.0 ±0.1 V.
31. Using the power supply adapter cable, connect variable dc power supply to the dc input connector on the monitor's side panel.
32. With the DMM still set to measure voltage, connect the reference lead to P4 pin 2 or 4 (Ground), or connect it to the tab of U602 on the Main Board (see Figure 3-5).
33. Connect the DMM's positive lead to P4 pin 1 or 5.
34. Check that the current drawn from the variable dc power supply is less than 650 mA.
35. As the current draw to the charged battery decreases, note the DMM reading after the current draw drops below 400 mA.

    The voltage should be approximately 9.4 V.
36. Disconnect the DMM leads.
37. Connect the scope reference to pin 2 or pin 4 of P4, or connect it to the tab of U602 on the Main Board (see Figure 3-5).
38. Connect the scope probe to P4 pin 1 or 5.
39. Set the scope for a 300 mV ac bandwidth limited measurement.
40. Check that the recharger ripple is less than 300 mV p-p.

    For LCD display monitors, skip steps 41 through 45.
41. Turn on the monitor. Position the display for easy viewing.
42. Adjust RP1 (Figure 3-4) clockwise until the display background illuminates.
43. Find the brightest background area on the display and view this area through a paper tube to shield view from external light.

44. Adjust RP1 counter-clockwise until the brightest background area, as viewed through the tube, fades to black.

45. Position the tube to view the brightest area (now dim) and simultaneously a lighted area (pixels on). Adjust RP1 clockwise until the background area is just beginning to illuminate.

NOTE

See the Main Board Cuff Channel calibration section for directions on adjusting RP5 for the hardware overpressure limit.

This concludes the Recharger Board calibration. For a full monitor calibration, continue to the Main Board calibration procedure below.

Main Board Setup

Set up for Main Board calibration as follows. If you are continuing from the Recharger Board calibration, skip steps 1 through 3.

1. Make sure the batteries are fully charged.

2. Disconnect the ac power adapter from the monitor's side panel connector.

CAUTION

As you open the monitor in the next step, be sure to disconnect the tubing from the pressure transducer to prevent the tubing from tearing. See Section 5.

3. If necessary, open the monitor casing as described in Section 5.

4. Refer to Figure 3-3 and disconnect the battery connector from P4 on the Recharger Board. For EL display instrument only, disconnect P6 display interconnect cable and install the extension cable (see Table 3-2).

5. Connect the power supply adapter cable (see Table 3-2) to the dc power supply (red wire to +; black wire to –).

6. Turn on the variable dc power supply and adjust for 9.0 V output.

7. Connect the power supply adapter cable to P4.

Power Supplies

1. Turn on the monitor.

NOTE

The ability to accurately measure the value in the next step depends on the dc power supply's current meter. Some digital meters cannot accurately average currents from switching power supplies.

2. Check that the current draw from the dc supply averages ≈190 mA, fluctuating to a maximum of 450 mA.

3. Turn off the monitor.

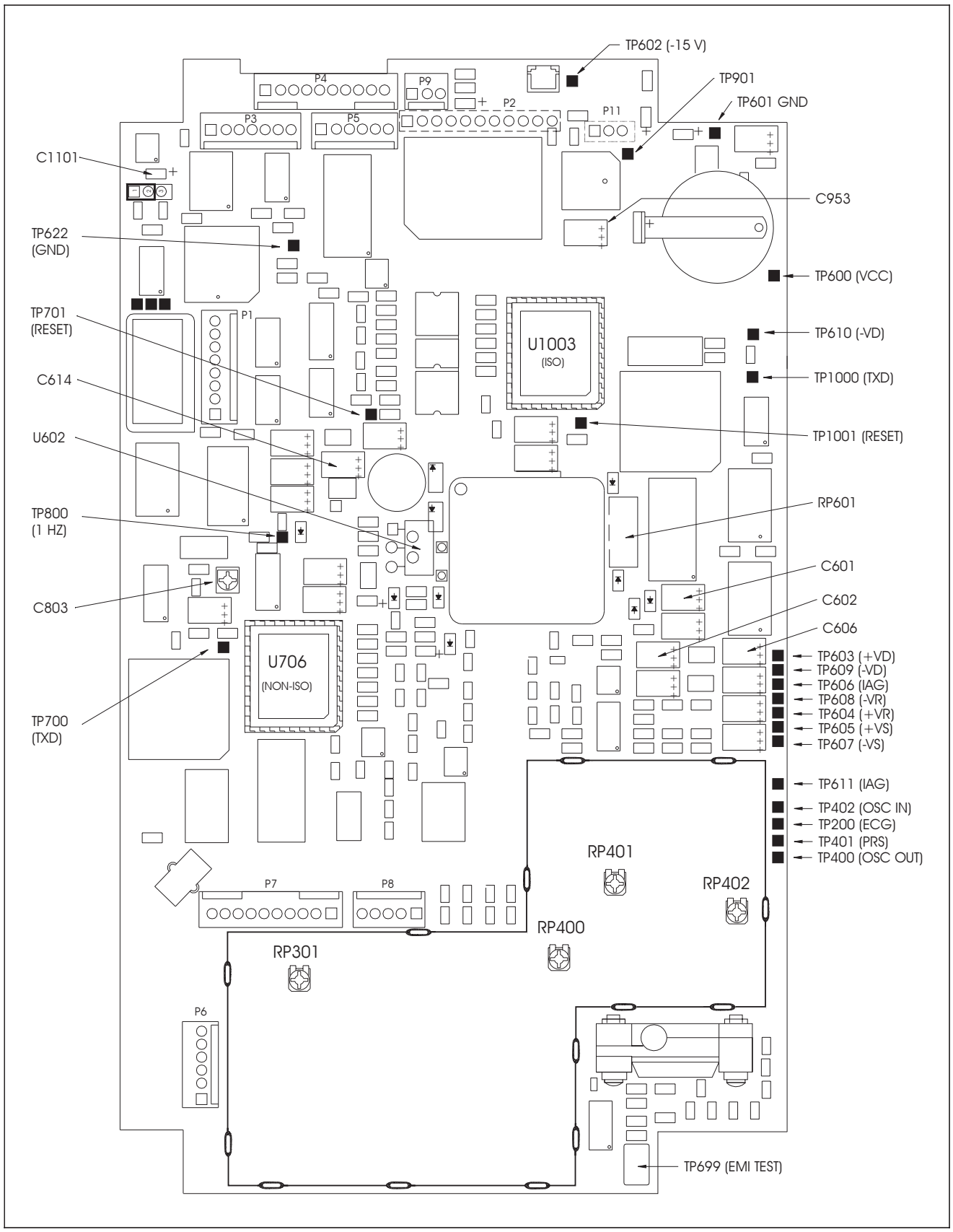

Fig. 3-5. Main Board Test Points and Adjustments

4. Disconnect the display interconnect extension cable from P6.
5. Turn on the monitor.
6. For LCD version monitors, turn off the backlight from the MAIN menu level by pressing:
   (**Version 7.x**) DISPLAY > MORE > MORE > MORE > BACKLITE,
   or (**Version 8.x**) DISPLAY > MORE > BACKLITE.
7. Check that the current drawn from the dc supply is 85 ±15 mA.
8. Turn off the monitor.
9. Reconnect the display interconnect extension cable to P6.
10. Turn on the monitor.
11. Connect the DMM reference probe to TP606 (Isolated Analog Ground—IAG). See Figure 3-5.
12. Refer to Table 3-3 and Figure 3-5 and check the isolated dc supply voltages at listed positive test points. Change the DMM reference probe as indicated, starting with the +VD supply.

Table 3-3. Isolated Power Supply Voltage Checks

Supply	DMM Reference Test Point	DMM Positive Test Point	Voltage Limits
+VR	TP606 (IAG)	TP604	+2.425 to 2.540 V
–VR	TP606 (IAG)	TP608	–VR = –|+VR ±0.025| V
+VS	TP606 (IAG)	TP605	+5.50 to +5.90 V
–VS	TP606 (IAG)	TP607	–5.50 to –5.90 V
+VB	TP606 (IAG)	C602 +	+3.10 to +3.50 V
–VB	TP606 (IAG)	C601 –	–3.10 to –3.50 V
+VD	TP604 (+VR)	TP603	0.200 to 0.230 V
–VD	TP610 (-VD)	TP608	0.200 to 0.230 V

13. Connect the DMM reference probe to TP601 (non-isolated ground). See Figure 3-5.
14. Refer to Table 3-4 and Figure 3-5 and check the non-isolated dc supply voltages at listed positive test points.
15. Disconnect DMM leads.
16. Disconnect P5 from the Main Board.

Table 3-4. Non-Isolated Power Supply Voltage Checks

Supply	DMM Reference Test Point	DMM Positive Test Point	Voltage Limits
Vcc	TP601 (Non-Isolated)	TP600	4.90 to 5.10 V
-VSUP	TP601 (Non-Isolated)	TP602	–14.40 to –15.30 V
+VSUP	TP601 (Non-Isolated)	C953 +	14.40 to 15.80 V
V4.0*	TP601 (Non-Isolated)	C614 +	+3.80 to +4.20 V
–5.0 V	TP601 (Non-Isolated)	C1101 –	–4.80 to –5.30 V
–2.5 V	TP601 (Non-Isolated)	TP901	–2.470 to –2.520 V

*V4.0 measurements must be made while the monitor is in the CUFF CAL Mode. This is done by pressing SYSTEM > MORE (for **Version 8.x**, press MORE twice) > SERVICE > CUFF TEST > CUFF CAL.

17. Connect a jumper between test points TP701 and TP601 and another jumper between TP1001 and TP610. See Figure 3-5. This will hold both CPUs in reset to allow power supply ripple checks to be made.
18. Connect the bandwidth-limited oscilloscope ground lead to the isolated ground test point TP606 (IAG). See Figure 3-5.
19. Refer to Table 3-5 and Figure 3-5 and check that the isolated power supply ripple is within the limits shown at the listed test points.
20. Connect the bandwidth-limited oscilloscope ground lead to the non-isolated test point TP601. See Figure 3-5.

Table 3-5. Isolated Power Supply Ripple Checks

Supply	Oscillscope Reference Test Point	Oscillscope Signal Test Point	Ripple Limits (Peak-to-Peak)
+VR	TP606 (IAG)	TP604	≤5 mV
–VR	TP606 (IAG)	TP608	≤5 mV
+VS	TP606 (IAG)	TP605	≤15 mV
–VS	TP606 (IAG)	TP607	≤15 mV
+VB	TP606 (IAG)	C602 +	≤50 mV
–VB	TP606 (IAG)	C601 –	≤50 mV
+VD	TP606 (IAG)	TP603	≤50 mV
–VD	TP606 (IAG)	TP610	≤50 mV

21. Refer to Table 3-6 and Figure 3-5 and check that the isolated power supply ripple is within the limits shown at the listed test points.

22 .Disconnect oscilloscope.

Table 3-6. Non-Isolated Power Supply Ripple Checks

Supply	DMM Reference Test Point	DMM Positive Test Point	Voltage Limits
Vcc	TP601 (Non-Isolated)	TP600	≤50 mV
V–15	TP601 (Non-Isolated)	TP602	≤50 mV
V+15	TP601 (Non-Isolated)	C953 +	≤50 mV
–5.0 V	TP601 (Non-Isolated)	C1101 –	≤50 mV
–2.5 V	TP601 (Non-Isolated)	TP901	≤20 mV

23. Set up frequency counter to measure time period with attenuator in 0.1 position and gate at 0.01 sec.
24. Connect counter negative lead to TP601 (non-isolated ground point). Connect positive lead to TP800.
25. Adjust C803 for a period of 1 second, ±20 µs (clock calibration).
26. Remove frequency counter leads, turn off monitor, and remove jumpers from TP701, TP610, TP601 and TP1001.
27. Reconnect P5.
28. Turn on the monitor and press SYSTEM > MORE > TIME/DAY.
29. Check that the dc power supply voltage is 9.00 V ±0.05.
30. Check that the battery voltage displayed in the Propaq status window is 9.0 ±0.2 V.
31. Press MAIN MENU.
32. Turn the monitor power switch off.
33. Adjust variable dc power supply for 6.5 V.
34. Turn the monitor on and check that the monitor automatically turns off after performing its self test.
35. Disconnect any test equipment leads still remaining connected to the monitor.
36. Using the oscilloscope with a 1X probe, measure the test pad TP699. Adjust RP601 with a non-conductive screwdriver for minimum high frequency (≈40 kHz) signal. (The oscilloscope ground clip is not used for this step.)

NOTE

The next steps check the RS-423 loopback test fixture shown in Appendix A.

37 Unplug the cable from connector P3 on the main board (shown in Figure 3-5), and plug the RS-423 loopback test fixture into P3.

38. From the main menu, push SYSTEM > MORE (for **Version 8.x,** press MORE twice) > SERVICE > MORE > NET TEST > LOOP TEST. Check for a **PASSED** message on the display.

39. Remove the loopback test fixture from P3 and replace with the cable removed in step 37.

P1, P2

The following steps allow calibrating one invasive pressure channel (P1). Repeat the steps for checking P2 of a Propaq 106. If you are calibrating a 102, skip this part of the procedure.

CAUTION

Many blood pressure simulators are not intended to be used as a calibration standard. The simulator you use should meet the specifications of Table 3-2. Check your simulator's specifications.

1. Plug the invasive pressure simulator into the pressure jack.
2. Set the simulator to 0 mmHg.
3. Press SYSTEM > MORE (for **Version 8.x**, press MORE twice) > SERVICE > IBP TEST.
4. Record the A/D count on the display (512 ±10).
5. Set the simulator to 200 mmHg.
6. Check that the A/D count is 200 ±2 counts over the value recorded in step 4.
7. If necessary, adjust RP301 (Figure 3-5) with a non-conductive screwdriver to set the count difference to 200.

NOTE

Because RP301 affects the counts at 0 mmHg and 200 mmHg, repeat steps 2 through 7 until the difference is 200.

8. Set the pressure simulator to 0 mmHg.
9. Press MAIN MENU.
10. Press SENSORS > INV PRS > RESCALE.
11. Check that the displayed pressure waveform, i.e., channel noise, is no larger than 6 pixels p-p (after subtracting 1 pixel from the total for trace thickness).
12. Press MAIN MENU.

Delayed Analog/Defib Sync

1. On the right side panel, connect either the Analog Output Cable to the monitor's DELAYED ANALOG output connector or the 6-pin, male, DIN connector to the DEFIB SYNC connector.

   NOTE

   The shell must be removed from the DIN connector to access the connector pins.

2. Set the pressure simulator to 200 mmHg.
3. For Propaq 104/106 monitors, check the P1 output pin for 2.0 ±0.2 V. For Propaq 102 monitors, check the P1 output pin for 1.25 V ±120 mV. Disconnect the IBP input.
4. Connect the ECG simulator to the monitor.
5. Set the simulator for a normal sinus rhythm at 80 bpm with 1 mV amplitude.
6. Using the oscilloscope, check the SYNC output pin for a 0 to 5 V, 100 ±5.5 msec pulse occurring at the ECG rate (refer to Figure 3-6).
7. With the ECG channel set to lead II and 1mV size, check the ECG output pin for a 1 V ±100 mV ECG signal.

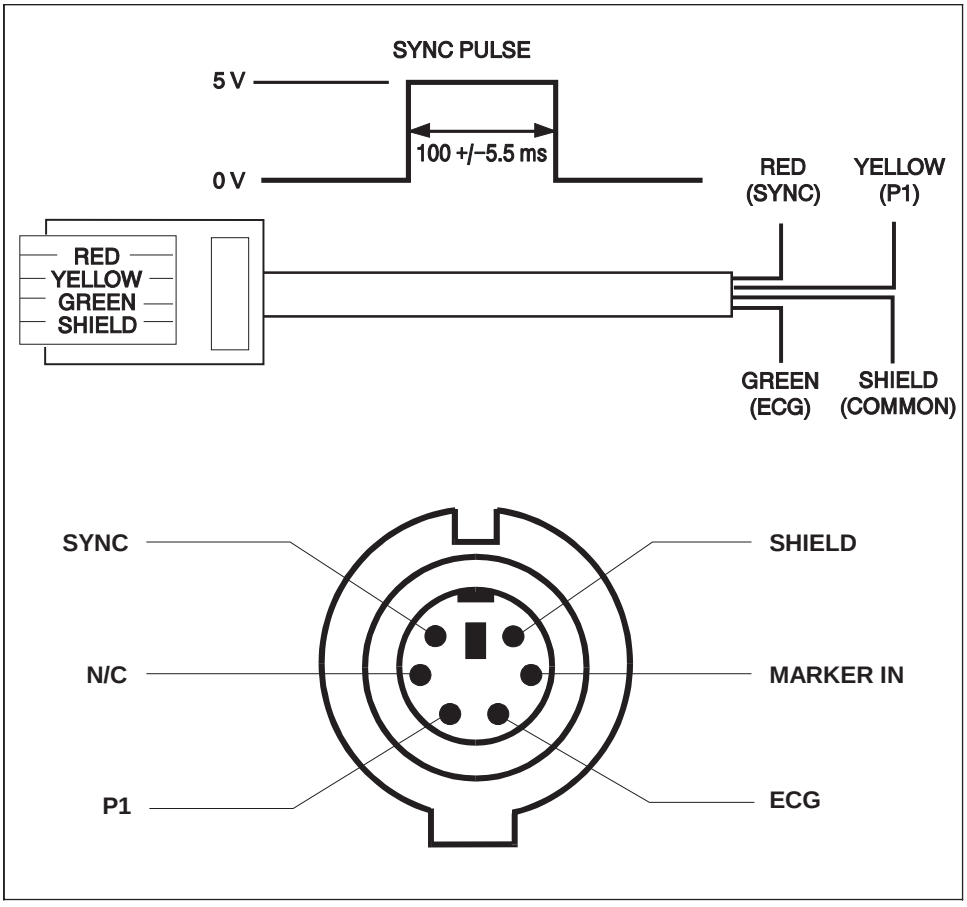

Fig. 3-6. Defib Sync/Analog Output Connector

8. Remove the DIN connector from the DEFIB SYNC connector.

NOTE

The Marker In function at the DEFIB SYNC connector is designed for use only with the LIFEPAK®5 and LIFEPAK®6s defibrillators manufactured by Physio-Control Corporation. The Marker In function can only properly be checked when connected to one of these two defibrillators.

9. See the *Propaq Users Guide* for instructions on installing the Defib Sync interface cable and defibrillator. Follow the instructions to obtain synchronization markers on the Propaq display.
10. Turn off the ECG simulator and disconnect it from the monitor.
11. Disconnect the invasive pressure simulator and analog output cable or defib sync cable from the monitor.

CUFF Channel

NOTE

In the following steps, the monitor's displayed pressure must be checked against a calibrated mercury-column manometer.

1. Connect the cuff, manometer with bulb, and the monitor together with the Cuff Calibration Kit. See Section 2, Figure 2-3.
2. .Connect a several-inch piece of extension tubing between the transducer mounted on the Main Board and the tubing that was previously disconnected from it.
3. Wrap the adult cuff around a cylindrical object about the size of an adult's arm.
4. Press SYSTEM > MORE (for **Version 8.x**, press MORE twice) > SERVICE > CUFF TEST > CUFF CAL.

   The Propaq pneumatic components now prevent cuff air from flowing through the vent port to the atmosphere for a ten-minute period. If the following steps take longer than ten minutes, simply press CUFF CAL again.

5. Set the DMM for a 1 V measurement.
6. Connect the DMM reference lead to TP606 (Figure 3-5).
7. Connect the DMM positive lead to TP400 (Figure 3-5).
8. Adjust RP402 (Figure 3-5) for a DMM reading of -0.625 ±0.075 V.
9. Disconnect the DMM positive lead from TP400.
10. Connect the scope reference lead to TP606.
11. Connect the oscilloscope to TP400, and activate the oscilloscope's bandwidth limiting function.

12. Check for a noise level of no greater than 60 mV pk-to-pk.
13. Disconnect the oscilloscope from TP400.
14. Press CUFF CAL and listen for a mild "click" sound from the primary cuff valve.

NOTE

In the following step, if pumping the bulb does not inflate the cuff, press CUFF CAL again.

15. Close the valve on the bulb.
16. Inflate the cuff to 164 mmHg as shown on the mercury-column manometer.

NOTE

Adjustments in steps 17 and 19 are sensitive.

17. Adjust RP401 (Figure 3-5) for an A/D count of 512 ±3.
18. Deflate the cuff to 50 mmHg as shown on the mercury-column manometer.
19. Adjust RP400 (Figure 3-5) for an A/D count of 170 ±3.

NOTE

Recheck the A/D count at 164 mmHg. Adjustments of RP401 and RP400 are interactive. Repeat steps 14 to 19 until the values are as specified.

20. Connect the oscilloscope to TP401.
21. Check for a noise level no greater than 5 mV.
22. Disconnect the oscilloscope.
23. Inflate cuff to over 250 mmHg as shown on the mercury-column manometer.
24. Begin to slowly bleed the cuff at a constant rate until the mercury-column manometer reads 250 mmHg.
25. Check the monitor display for 250 ±3 mmHg.
26. Continue to bleed the cuff to each of the following manometer pressure readings and check that the monitor displays the cuff pressure within the following limits: ±3 mmHg at 250 and 200, ±2 mmHg at 100, 20 and 50.
27. Bleed cuff to 0 mmHg and check that the monitor displays 16 ±5 counts.

NOTE

Steps 28 through 33 are used to adjust RP5 (hardware overpressure limit) on the Recharger Board. *It is more convenient to perform these tests now, since the cuff calibration kit and the cuff test menus are already set up.*

28 .Press CUFF CAL again if required to continue this test.

29. Close the valve on the bulb and inflate the cuff to 290 mmHg.

30. Observe the manometer reading while **slowly** increasing the pressure until the Propaq releases the cuff pressure. (Note that there is a settling delay time constant of approximately 2 seconds in the Propaq, so *this step must be done slowly*.)

31. If the release pressure is between 295 and 305 mmHg, proceed to step 34; otherwise, continue with step 32.

NOTE

*If the Propaq releases the cuff pressure during this test and squeezing the bulb does not reinflate the cuff, start over by cycling the Propaq power switch off, then back on again. Return to the cuff service screen by pressing SYSTEM > MORE (for **Version 8.x**, press MORE twice) > SERVICE > CUFF TEST > CUFF CAL.*

32. RP5 (Figure 3-4) on the Recharger Board must be readjusted, if needed, to make the trip pressure as close as possible to 300 mmHg. Rotate the adjusting screw of RP5 1/4 turn counterclockwise to decrease the trip point, or 1/4 turn clockwise to increase the trip point.

33. Repeat steps 29 through 32 as required.

35. Disconnect the Cuff Calibration Kit from the monitor.

36. Disconnect the extender tube from the transducer and tubing.

If an equipment alarm sounds, press DISABLE.

37. Press MAIN MENU.

Temperature

NOTE

Propaq circuitry common to all temperature inputs is automatically tested on a periodic basis. If this common circuitry falls out of calibration, attempting to plug in a temperature probe results in the error message: TEMP FAULT: CALIBRATION ERROR, TEMP DISABLED.

1. Insert a YSI 400 Series calibrated temperature probe simulator into the T1 jack.

2. Check that T1 temperature is ±0.2°F (±0.1°C) of the calibration temperature.

3. Replace the YSI 400 simulator with a YSI 700 Series probe simulator.

4. Check that T1 temperature is ±0.2°F (±0.1°C) of the calibration temperature.

NOTE

The Propaq 106 does not support Electromedics temperature probes. Steps 5 and 6 below do not apply.

5. Insert an Electromedics 2100 Series calibrated temperature probe simulator (see Table 3-2) into the T2 jack.
6. Check that the T2 temperature is ±0.2°F (±0.1°C) of the calibration temperature.
7. Disconnect all simulators from the monitor.

SpO_2 Calibration

There are no adjustments needed for the SpO_2 Module.

MSP Board (CO_2) Calibration

The Propaq MSP board has two calibration adjustments. One adjustment (RP2) is a null adjust for electromagnetic interference emissions—this adjustment has no effect on CO_2 performance/accuracy. The other adjustment (RP1) is a barometric pressure/altimeter setting. This adjustment is set at Protocol during the production calibration process and does not require readjustment for use at other altitudes.

NOTE

The verification section of this manual (Section 2) provides a procedure to verify CO_2 accuracy. If the verification test results are within specifications, board calibration is not required. If verification test results exceed specification limits, RP1 calibration MAY or MAY NOT be required—see Table 2-4 for possible sources of errors in testing.

Before adjusting RP1, check test parameters as indicated in Table 2-4 to minimize errors. Determine local barometric pressure as described in Section 2 to verify Propaq barometer setting. Adjust RP1, if required, as instructed in step 2.

1. From Propaq main menu, push SYSTEM > MORE > MORE > SERVICE > YES > MORE > MORE > CO2 and observe the displayed barometric pressure. Check that the displayed pressure is within 3 mmHg of the local barometric pressure as calculated in Section 2.
2. Adjust RP1 on MSP board if required to calibrate displayed pressure to specified limits.
3. Using an oscilloscope with a 1X probe, connect probe tip to TP50 on the MSP board. Leave probe ground clip open.
4. Adjust RP2 for minimum high frequency (100 kHz) signal.

Functional Verification

1. Turn off the monitor and all test equipment.
2. Disconnect all cables from the monitor.
3. Close the monitor casing as described in Section 5.
4. Perform the Functional Verification procedure in Section 2.

Section 4

Troubleshooting

Introduction

This section provides information that can be helpful in troubleshooting the Propaq 100-Series Monitors.

Screen Messages

Messages may appear on the display to inform the operator of some functional condition. Those messages are explained below.

Equipment Alerts and Caution Messages

Equipment alert conditions result in both 1) an audible alarm tone which sounds until the alert condition is corrected, and 2) an equipment alert message, which appears in the equipment alert window on the display. Some equipment conditions also result in a caution message alternating with the time of day, cuff, or temp numerics to the left of the heart rate.

CHECK ACUITY/DATA COMM CONNECTION. This message appears when the Acuity cable is unplugged from the Propaq. To cancel, press the DISABLE button. Pressing the NET OFF button (in the SYSTEM Menu) prior to unplugging the Acuity cable does not prevent this equipment alert from appearing. **Software V7.01 and up only.**

LOW BATT. This message indicates low battery voltage. Plug the Propaq into ac mains using the power adapter to recharge the battery.

SIMULATING. INSERV mode is activated; simulated patient data is being displayed and saved in trend memory. To deactivate, turn Propaq off and then on.

PROGRAM FAULT: SETTINGS LOST, TIME/DAY RESET. If this message appears when the Propaq is first turned on, it generally indicates a drained lithium battery. The monitor can be used, but all settings will return to factory defaults each time the monitor is turned off and on. Replace the lithium battery as soon as possible.

ECG Messages

ECG FAULT. Indicates ECG lead fault for one or more leads. An equipment alert window appears, indicating which lead or leads are faulty. Check ECG lead wires, electrodes, and cable.

Invasive Pressure Messages

The invasive pressure channel can produce messages that appear in the time of day window, the blood pressure numerics window, and the equipment alert window.

The following messages appear in the blood pressure numerics window.

Px NOT ZEROED. This message appears the first time a transducer is connected to the monitor. It indicates that no zero reference has been established. The monitor displays the pressure waveform, but to protect against erroneous readings, the pressure waveform scale is not displayed.

Px ZEROING. This message briefly appears as the transducer is being zeroed.

Px ZEROED. This message appears after the zero value has been accepted. It remains for eight seconds and is replaced by the current pressure values. After zero acceptance, the pressure waveform scale appears.

Px ZERO REJECTED. This message appears after unsuccessfully attempting to acquire a zero reference value. The message remains until the CANCEL button is pressed. Causes of unsuccessful zeroing may include an incompatible or defective transducer or cable.

Px CANCELED. This message appears after the CANCEL button is pressed and remains for eight seconds.

The following caution messages can appear in the time of day window above the heart rate.

P1 FAULT (P2 FAULT). One or both of these messages appear when a transducer fault is detected. An equipment alert also occurs. (See the following equipment alert messages.)

The following equipment messages can appear in an equipment alert window. A caution message also appears in the time of day window.

TRANSDUCER NOT DETECTED. This message appears when the Propaq detects that a transducer connection is broken. The transducer connections and the transducer should be checked.

TRANSDUCER SHORTED. This message appears when the Propaq senses a short in the transducer. The transducer should be replaced.

INCOMPATIBLE TRANSDUCER. This message appears when the Propaq has the Hewlett-Packard Connector-Compatible option, and an HP1290A invasive pressure transducer has been plugged in. The HP1290A is not compatible with this option; use only approved transducers listed in Section 6 of the Propaq Users Guide for Version 8 software.

NOTE

Since both pressure channels use the same hardware, an incompatible transducer plugged into one channel will likely cause false readings on the second channel as well, even if a compatible transducer is plugged into the second channel.

Cuff Messages

The following cuff messages can appear in the equipment alert window. A **CUFF FAULT** caution message also appears in the CUFF window (to the right of the time of day window).

CUFF FAULT: LOW BATTERY, CUFF DISABLED. The battery lacks sufficient voltage to be able to operate the CUFF channel. Connect the Propaq to the ac power adapter.

CUFF FAULT: CALIBRATION ERROR, CUFF DISABLED. The Propaq continually recalibrates the cuff channel to ensure it can properly make cuff determinations. If this message momentarily appears and then is removed, the cuff channel was able to calibrate itself and the cuff channel is properly operating. If this message continuously appears, the cuff channel could not be properly calibrated and must be disabled using the DISABLE button. Once the cuff channel is disabled, normal monitor operation continues, but the cuff channel cannot be used. Repair is required.

CUFF FAULT: MEASUREMENT TIME OUT. A valid cuff measurement could not be determined within 3 minutes. This could be due to patient motion, arrhythmia, or other environmental influences such as transport vibration. Try the measurement again.

CUFF FAULT: EXCESSIVE ARTIFACT. Too much patient motion, patient arrhythmia, or sources of external cuff movement can cause this message.

CUFF FAULT: NO PULSES DETECTED. The cuff may not be on a patient or properly applied to the patient.

CUFF FAULT: NO CUFF. During cuff inflation the detected pressure did not sufficiently rise. Check that the cuff connection is tight, and take the measurement again.

CUFF FAULT: NO VALID BLOOD PRESSURE FOUND. The Propaq cannot process the measurement data it acquired. Patient motion, arrhythmia, or outside environmental influences such as transport vibration can cause this message.

CUFF FAULT: KINKED HOSE, CHECK HOSE. The Propaq could not properly inflate the cuff. Check for a kinked hose between the monitor and the patient.

CUFF FAULT: BLOCKED VENT. The pressure in the cuff cannot be vented to the atmosphere. Inspect the vent hole for blockage.

CUFF FAULT: AIR LEAK, CHECK HOSE. The Propaq could not properly inflate the cuff. Check the hose and cuff for obvious leaks, such as the O-rings in the hose connections.

CUFF FAULT: WEAK PULSES, CAN'T FIND SYS/DIAS. There are not enough pulses to determine the systolic or diastolic pressures, but a mean pressure is available. Try reapplying the cuff after squeezing as much air from it as you can, and then take another measurement.

CUFF FAULT: OVERPRESSURE CONDITION, CHECK HOSE. Occasionally high cuff pressures, caused by patient motion, can create leaks in old hoses or bladders. This same type of patient motion can also activate the Patient Overpressure Safety Circuitry, which then disables the pump and

removes pressure from the cuff. When either case occurs, this equipment message is displayed. Check the hose, press DISABLE, and try taking another measurement.

CUFF FAULT: OVERPRESSURE CONDITION, CYCLE POWER. If the Patient Overpressure Safety Circuit (Recharger Board) has been activated, this message is displayed. This message is displayed several seconds after the beginning of an attempted CUFF measurement, or if the pressure remains above 5 mmHg for more than 2 minutes after an attempted CUFF determination has ended. The cuff channel is disabled and the Propaq must be turned off, then back on before the cuff channel can be used. If this message reappears after cycling power, service the Propaq.

The following messages can appear in the cuff status window (the upper right corner of the normal status window area).

CALIBRATING. The CUFF channel is running an internal calibration.

DISABLED, CAL ERROR. See the description above for CUFF FAULT: CALIBRATION ERROR, CUFF DISABLED.

DISABLED, LOW BATT. See the description above for CUFF FAULT: LOW BATTERY, CUFF DISABLED

Temperature Messages

The following messages can appear in an equipment alert window. A temperature caution message also appears in the temperature numerics window when one of these messages appears.

PROBE NOT DETECTED. This message occurs when the Propaq has successfully measured temperature and a probe is disconnected. Reconnect the probe and acknowledge the equipment alert by pressing any menu key.

PROBE SHORT OR OUT OF RANGE. This message usually indicates a probe problem. However, the temperature being measured may be beyond the range of the probe or the range of the Propaq. If the probe is correctly applied to a patient who you believe has a measurable temperature, replace the probe.

CALIBRATION ERROR, TEMP DISABLED. This message appears when the Propaq has detected that the temperature circuitry common to all temperature channels is out of calibration. (This occurs when the values obtained during auto calibration check do not match those obtained during auto calibration.) The temperature channel is disabled until the Propaq is repaired.

SpO_2 Messages

SpO_2 messages can appear in the equipment alert window (SpO_2 equipment alerts), the SpO_2 numeric window, or alternate with the time of day (SpO_2 caution messages).

NO SENSOR DETECTED appears in the equipment alert window and indicates a probe has been disconnected from the monitor after being plugged in for a few seconds.

Pressing DISABLE deactivates the alert, removes the SpO_2 plethysmograph, and deactivates the channel.

If an SpO_2 sensor is subsequently connected to the Propaq, the channel becomes active and performs its self-calibration.

SEARCH is displayed in the numeric window after the Pulse Oximetry sensor is first connected to the monitor. During this search time, the SpO_2 channel tries to detect blood pulsing through the measurement site. Once the measurement has been established, the oxygen saturation value is displayed in the numeric window.

SpO2 SRCH alternates with the time of day whenever the channel cannot detect a pulse for SpO_2 measurements after it has successfully measured oxyten saturation. While this message is displayed, **???** is displayed in the numeric window and the SpO_2 channel searches for blood pulses at the sensor site.

NO C-LOCK. SpO_2 is active with C-LOCK function turned ON, but a QRS event cannot be detected. Check all ECG lead wires, electrodes, and cable.

Printer Messages

PRNT FAULT. Problem with the printer: low battery, overheating, out of paper, paper door open. Check the printer paper, paper door, and general functionality of printer. This alert message is displayed in the time of day window.

CO_2 Messages

CO_2 messages can appear in the equipment alert window and in numeric zones, as follows:

The **NON PROTOCOL SENSOR; DEGRADED WAVEFORM; ALTIMETER FAILURE, RANGE;** and **LOW BATTERY, HEATER DISABLED** (listed here in order of priority, highest priority alert first) equipment alerts display **UNCAL** in the CO_2 numerics zone, and the CO_2 waveform is displayed without range scales.

If more than one alert occurs at the same time, the highest priority alert is displayed in the equipment alert window. When an equipment alert is acknowledged or its alert condition ceases, any lower priority alerts still active remain in effect but do not generate new equipment alert screens.

During warm-up, **WARM UP** is displayed in the CO_2 numerics zone, and the waveform is displayed without range scales.

The breath rate numeric is not affected in either case. If the printer option is present, **INVALID** is used in place of **SRCH, UNCAL** and **WARM UP**.

ALTIMETER FAILURE, RANGE. The high or low CO_2 sensor operating range, -2000 ft (817 mmHg) to 15,000 ft (428 mmHg) has been exceeded. The channel remains uncalibrated (RR not affected) and the equipment alert is not reenabled until the altitude falls within the calibrated normal operating range noted above.

ALTIMETER FAILURE, RATE. Barometric pressure is changing at a rate greater than approximately 100 millimeters/minute. The channel is disabled until disconnect.

DEGRADED WAVEFORM. The detector high peak signal level has dropped below 1.75 V. This equipment alert and the CO_2 numerics are not reenabled until the detector high peak signal increases to 2.0 V or greater.

LACK OF WAVEFORM, SENSOR DISABLED. The detector high peak signal level has dropped below 1.25 V. The channel will be disabled until disconnect.

LOW BATTERY, HEATER DISABLED. The mainstream CO_2 heater is disabled when the battery voltage falls below 7.3 V; it is not reenabled until battery voltage exceeds 7.8 V.

NO SENSOR DETECTED. Sensor not connected. CO_2 numerics go blank and breath rate numerics read **SRCH**. Acknowledging the alert will cause both entire zones to go blank.

NON PROTOCOL SENSOR. A Pryon CO_2 sensor has been connected; it does not contain the correct E2PROM code from Protocol.

SENSOR FAILURE, CALIBRATION ERROR. A very negative number has been generated by the CO_2 algorithm. This may be caused by a sensor that is defective or out of calibration. The CO_2 channel is disabled until disconnect.

SENSOR FAILURE, E2PROM. A failure in the sensor E2PROM is detected (typically a checksum error). The CO_2 channel is disabled until disconnect.

SENSOR FAILURE, HEATER. A failure in the sensor temperature control hardware is detected (typically sensor error, but may be CO_2 circuitry malfunction). The channel is disabled until disconnect.

SENSOR FAILURE, MOTOR DRIVE. CO_2 sensor motor drive hardware has failed. The channel is disabled until disconnect.

SENSOR TEMPERATURE TOO HIGH. The CO_2 channel is disabled until disconnected; because the sensor's high temperature limit of 48°C was exceeded.

Fatal Error Codes

Fatal errors are errors, detected by software, that indicate the Propaq is no longer able to function properly and must be returned to Protocol for service.

When a fatal error is found, the software attempts to put the error message and its number on the Propaq display. All monitoring functions are locked out. Fatal errors are therefore distinct from equipment alerts, which permit reduced monitoring capability.

Fatal errors are indicated in the following format:

x - yyy

where:

- x = 0 indicates a problem found by the Display Control Processor (DCP), i.e. non-isolated, section of the Propaq Main Board.
- x = 1 indicates a problem found by the Data Acquisition Processor (DAP), i.e. isolated, section of the Propaq Main Board.
- x = 2 indicates a problem found by the Printer Control Processor on the Printer Main Board.
- x = 3 indicates a problem found by the SpO_2 Control Processor (SCP) on the SCP Board.
- x = 5 indicates a problem found by the Main Stream Processor (MSP) on the MSP Board.

- yyy indicate specific types of problems. Detailing the nature of these problems is beyond the scope of this manual. (Furthermore, these yyy codes change from one software version to another.) Contact Protocol Systems, Inc. for more details and/or send the monitor to an authorized Protocol repair center for repair.

For addresses and phone numbers of Protocol Systems, Inc., see **Repair and Upgrade Support** in Section 2, *Installation and Service.*

Section 5

Replacement Procedures

Introduction

This section provides instructions for removing and replacing serviceable modules in the Propaq monitor and expansion module, printer, CO_2, SpO_2 options. Instructions for the monitor are followed by instructions for the expansion module, printer and then the SpO_2 option (installed either in the SpO_2 module on the rear of the monitor or in the expansion module chassis) and, lastly, the CO_2 option.

System Software

Protocol continually works to enhance the Propaq series monitors. Appendix C lists the software revisions made to the Propaq series monitors. Enhancements often require changing the system software in the monitor. See **Replacing System Software** in this section for a description of how to change the system software.

STATIC DISCHARGE WARNING

Propaq monitors are manufactured with static-sensitive CMOS devices. All calibration, service, and repair must be done at a static-protected work station. Failure to protect against damage due to static discharge may reduce monitor operation life and increase repairs. Any time the monitor's casing is opened, the monitor should be placed on a static-protected work area.

Safety Tests

Whenever the monitor is opened for calibration or repair, a leakage current safety check as well as a hi-pot test should be performed. Instructions for performing these safety tests are located in Section 2, *Installation and Service*.

Opening the Monitor

Follow these steps when opening the monitor case to gain access to monitor circuitry.

WARNING

High current capability of the monitor battery pack can cause personal injury and monitor damage. Remove the battery pack before opening monitor case and replacing components. See instructions in this section for replacing the battery pack.

1. Set the monitor on a static-protected work area.
2. Using a Phillips screwdriver, carefully remove the six screws securing the handle and monitor casing (refer to Figure 5-1).

CAUTION

Before opening the casing more than one inch in the next step, disconnect the tube from the pressure transducer shown in Figure 5-1. Failure to disconnect the tubing at this point may cause damage to the tubing.

3. Carefully separate the casing by spreading the two halves from the top.

NOTE

Note the dressing of cables and tubing. The Recharger Board lays in the rear chassis of the monitor with the air pump secured to it. The Main Board lays in the front chassis.

4. Disconnect the pressure transducer tube.

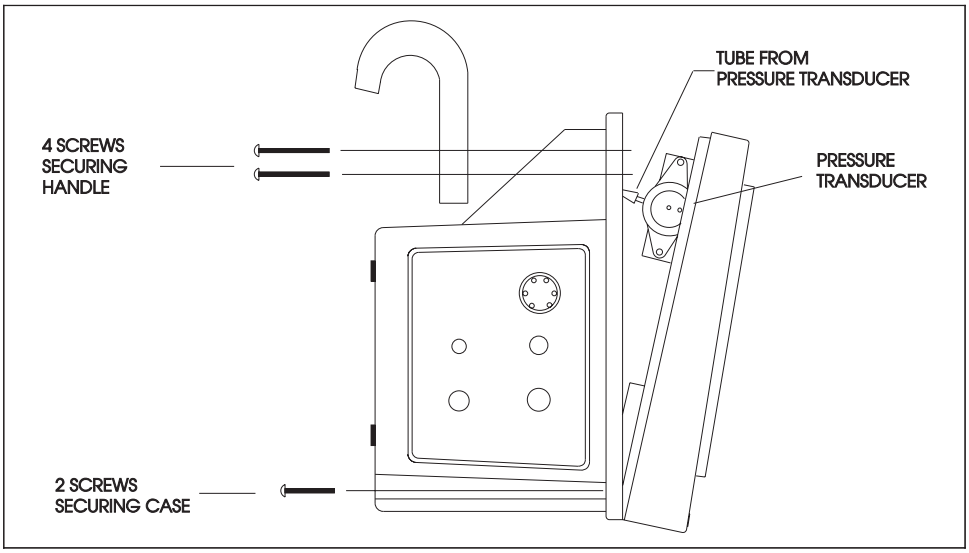

Fig. 5-1. Opening the Propaq: Screws and Transducer Tubing

5. Lay the two halves apart.

   If you disconnect any cables or unplug any air hoses, note their proper locations and connection points for referral when reassembling the monitor casing.

   NOTE

   The rear chassis is sealed to the front chassis with rubber O-ring gaskets around the perimeter of the rear chassis. These gaskets can be reused when reassembling the monitor. Save these gaskets for that purpose.

Closing the Monitor

1. Reconnect all disconnected cables and unplugged hoses according to Figure 7-1 and Table 7-1 (EL display monitors) or Figure 7-2 and Table 7-2 (LCD display monitors).
2. While closing the monitor casing, check that hoses and cables are not pinched, and reconnect the pressure transducer tube before completely closing the monitor casing.
3. Install the two bottom screws.
4. Assemble the handle to the monitor top and install the handle and the four top screws.
5. Make sure all screws are snug.
6. After reassembly, perform the verification procedures in Section 2.

Replacing the Battery Pack

The battery pack should be replaced when it can no longer hold an adequate charge as described in the **Battery Capacity Test** in Section 2. For dual battery pack service, see **Replacing the Dual Battery Pack** below.

WARNING

Handle the lead-acid battery pack with extreme caution. The battery can deliver very high currents, which can cause damage and burns should it be improperly handled or connected.

1. Using a slotted screwdriver, unscrew the four screws securing the battery pack cover.
2. Disconnect the battery pack cable from the battery pack.
3. Remove the battery pack from the monitor.
4. Carefully connect the battery pack cable to the new battery pack, noting the proper polarity of the connection.
5. Fold the excess battery cable wires as shown in Figure 5-2 and place the new battery pack into the monitor.

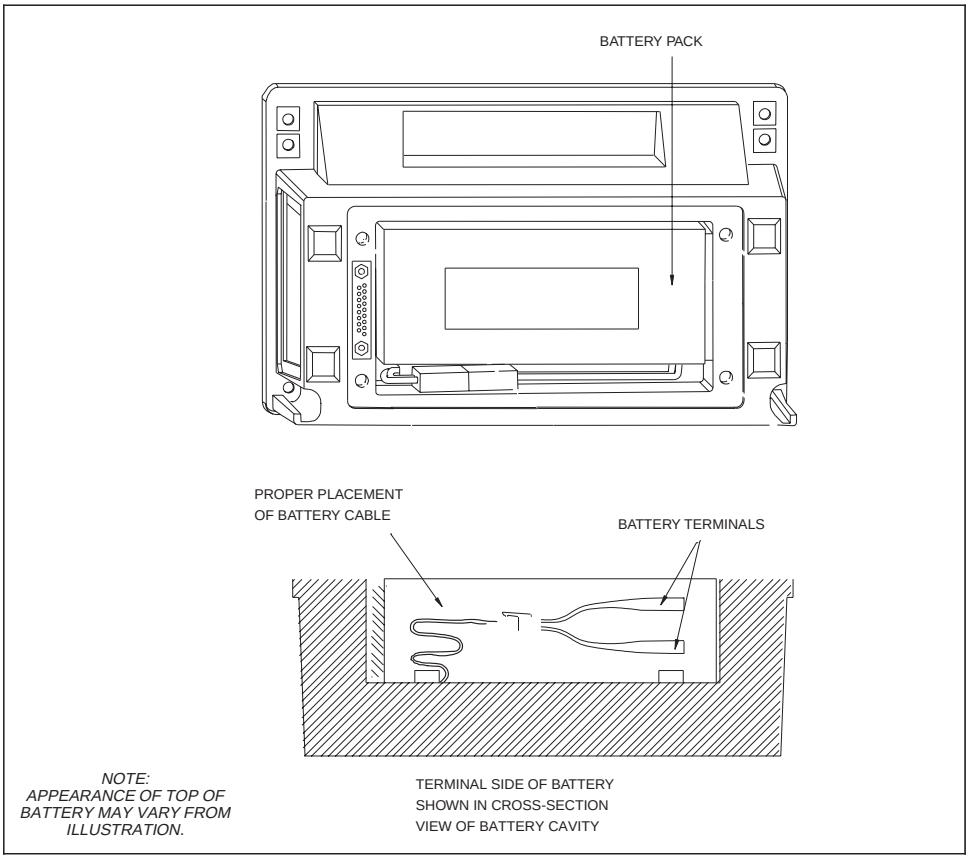

Fig. 5-2. Battery Pack Compartment

WARNING

Use extreme caution not to pinch the battery wires when inserting the battery pack into the monitor. Monitor failure or a fire can occur if wires get pinched, particularly under the lower corner of the battery pack.

5. Place the new battery pack into the monitor as shown in Figure 5-2.
6. Replace the cover and secure the screws.

Replacing the Dual Battery Pack

The dual battery pack should be replaced when it can no longer hold an adequate charge as described in the **Battery Capacity Test** in Section 2. For single battery pack service, see **Replacing the Single Battery Pack** above.

The dual battery pack is used in monitors with printer, SpO2, and CO2 options. Battery replacement instructions for options with of without expansion module are similar. The following instructions refer to illustrations in this section.

Dual Battery in Expansion Module

NOTE
Besides the four screws securing the expansion module to the monitor, four additional screws secure the rear panel to the expansion module chassis. Do not remove these screws.

1. Using a Phillips screwdriver, remove four screws (identified as A in Figure 5-11) from the expansion module rear panel.

WARNING

The Propaq sealed lead-acid battery pack is capable of quickly delivering dangerously high currents if improperly handled, misused, or abused. These current levels may burn skin or damage the Propaq. Use extreme caution when handling the battery pack in the next steps.

2. Slide the monitor forward until you can disconnect the battery pack cable from the monitor's power cable (Figure 5-12). The battery pack should remain in the expansion module chassis.
3. Continue to slide the monitor forward until it can be completely separated from the expansion module.
4. Slide the dual battery pack forward out of the expansion module until the battery connector can be reached (Figure 5-13).
5. Disconnect the battery connector from the expansion module.
6. Remove the dual battery pack from the expansion module.

CAUTION

Use care not to pinch the battery cables when inserting the dual battery pack into the expansion module.

7. Connect the battery connector to the expansion module.
8. Slide the dual battery pack into the expansion module.
9. Slide the monitor onto the expansion module with the battery pack.
10. With the monitor and expansion module slightly separated, connect the battery cable to the monitor power cable (Figure 5-12).
11. Slide the monitor completely onto the expansion module and secure with the four screws removed earlier.

Dual Battery in SpO_2 Module

Refer to Section 7, *Diagrams*, Figure 7-34 (partial 824-0204-XX, Sheet 2) when removing or installing the dual battery pack in the SpO2 Module.

1. Using a Phillips screwdriver, remove four screws from the SpO_2 module rear panel.

WARNING

The Propaq sealed lead-acid battery pack is capable of quickly delivering dangerously high currents if improperly handled, misused, or abused. These current levels may burn skin or damage the Propaq. Use extreme caution when handling the battery pack in the next steps.

2. Slide the monitor forward until you can disconnect the battery pack cable from the monitor's power cable.
3. Slide the monitor forward until it can be completely separated from the SpO_2 module.
4. Remove the dual battery pack.
5. Connect the new dual battery pack cable to the monitor power cable.
6. Slide the dual battery pack into the battery cavity of the monitor.
7. Slide the SpO_2 module onto the monitor and battery.

NOTE

The red and black connector is not connected to the SpO_2 module.

8. Secure the SpO_2 module with the four screws removed earlier.

Replacing the Lithium Battery

The lithium battery maintains programmed defaults and time of day. Without the Lithium battery, the values for these items return to the factory settings. If the power up error messsage **INVALID DEFAULT DATA: TIME/DATE SETTINGS LOST** is displayed, check the lithium battery.

WARNING

The lithium battery used in this monitor may present a fire or chemical burn hazard if mistreated. Do not recharge, disassemble, heat above 100°C (212°F) or incinerate. Replace the battery with Duracell Inc., Cat. No. DL2032 or Matsushita Electric, Cat. No. BR-2032 only. Use of another battery may present a risk of fire or explosion.

1. Open the monitor casing as described earlier.
2. Refer to Figure 5-5 for the location of the lithium battery.

NOTE

When removing the battery, do not bend the spring clip on the battery socket.

3. Remove the battery.

4. Measure the battery voltage.

   The battery should be replaced if it measures less than 2.9 V.

   Replace the battery only with either Duracell, Inc., Cat. No. DL2032, or Matsushita Electric, Cat. No. BR-2032. See Section 8 for replacement part numbers.

WARNING

Dispose of used battery promptly. Keep away from children. Do not disassemble and do not dispose of in fire.

5. Close monitor casing as described earlier.

6. Set the time of day and then reprogram the monitor's defaults by pressing the DEFAULT button in the Program Menu.

   See the *Propaq User's Guide* for more information.

Replacing Fuses

There are two fuses located on the Recharger Board. Fuse locations are shown in Figure 5-3. Fuse F1 protects the recharger input at the ac power adapter connector. Fuse F2 protects the Main Board power supply input at the battery line to the Main Board. If the monitor does not turn on but the **BATTERY CHARGING** indicator lights when the ac power adapter is connected, check fuse F2 (3 Amp).

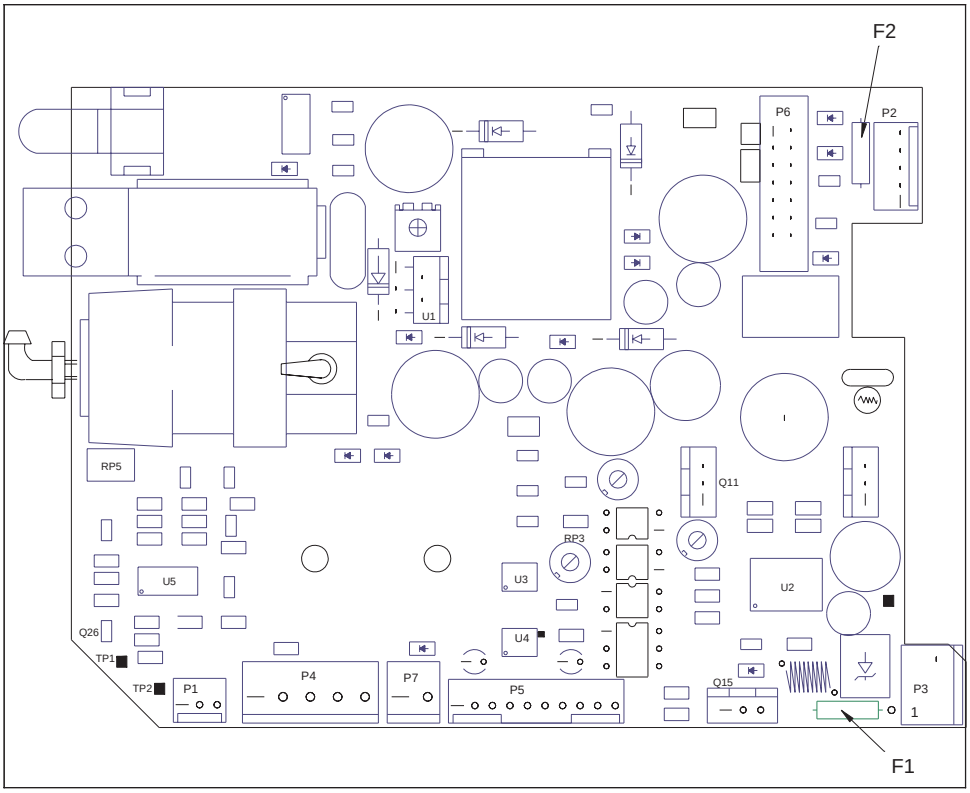

Fig. 5-3. Fuse Locations

If the monitor will not accept a charge from the ac power adapter but you believe the power adapter is functional and you notice that the green **BATTERY CHARGING** indicator is off, check fuse F1 (3 Amp).

CAUTION

Fuses are heat sensitive and must be soldered with heat sinks in place between the fuse body and the solder joint. To avoid possible burns or component damage, be sure to unplug the ac adapter and the battery cable (either at the battery itself, or at P4) before replacing fuses.

See Section 8 for replacement part numbers.

Replacing the Air Filter

The air filter keeps the air to the cuff relatively clean. If the filter becomes clogged with accumulated dust, smoke, or other debris, the air pump will not be able to inflate the cuff.

The filter is located inside the back half of the monitor casing (Figure 5-4). Exact placement varies with different models of left side panels. It is tucked into the back half close to the bleed valve, but can easily be replaced after the casing has been separated.

1. Open the monitor as described earlier.
2. Reach into the cavity where the filter is located and slide out the filter.
3. Remove the tubings from the filter and attach a new filter.
4. Carefully tuck the filter and tubing back in place.
5. Close the monitor as described earlier.

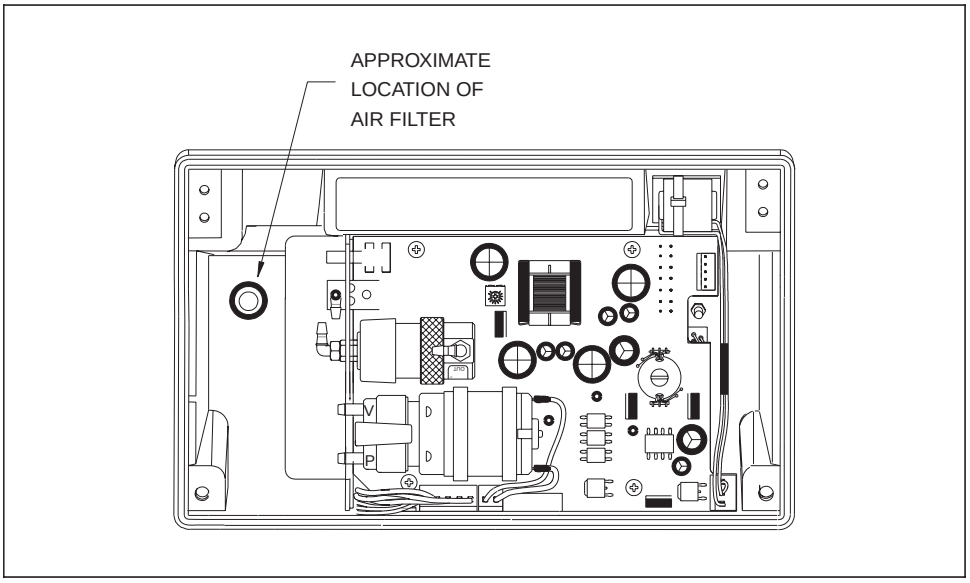

Fig. 5-4. Location of Air Filter

Replacing Air Tubing

Refer to Section 7, *Diagrams*, Figures 7-47 and 7-48 (partial 824-0230-XX, Sheets 4 and 5) for plumbing layouts and lengths of tubing. Use the plumbing configuration appropriate to the side panel option installed. If plumbing must be replaced, see Section 8 for part numbers.

NOTE

It is normal for the internal plumbing to darken over time from the dry graphite lubricant expelled from the pump.

Air problems can be due to restricted air flow or air leaks. Restricted air flow can be due to blocked tubing, a clogged air filter, or more likely, pinched tubing. Air leaks can be due to tubing and fittings, cuff overpressure valve, check valve, O-ring gaskets in the cuff hose fittings, or the bleed valve.

If the monitor displays **KINKED HOSE** or **BLOCKED VENT** messages, check the following in order:

- an obstruction of the cuff vent on the side panel
- pinched or kinked tubing
- torn tubing
- the condition of the filter (see **Replacing The Air Filter** earlier)

Firmly pull on the air tubing to disconnect it from its respective fitting. Replace it with the identical length and type of tubing, as noted above.

Replacing Cables

Figure 7-1 and Table 7-1 (EL display monitors) or Figure 7-2 and Table 7-2 (LCD display monitors) identify the locations of cables and their connections. Refer to this figure and table when disconnecting and reconnecting cables.

If you suspect a cable to be faulty, check its continuity on all pins. If you need to replace a cable, see Section 8 or contact Protocol Systems for part numbers.

NOTE

When removing a cable, be sure to note the routing. It is important that the new cable be routed in the same manner.

Replacing System Software

The system software is contained in pre-programmed PROMs located on the Main Board as shown in Figure 5-5. PROMs require special handling and programming, and must be replaced at Protocol Systems only. Contact Protocol for more information.

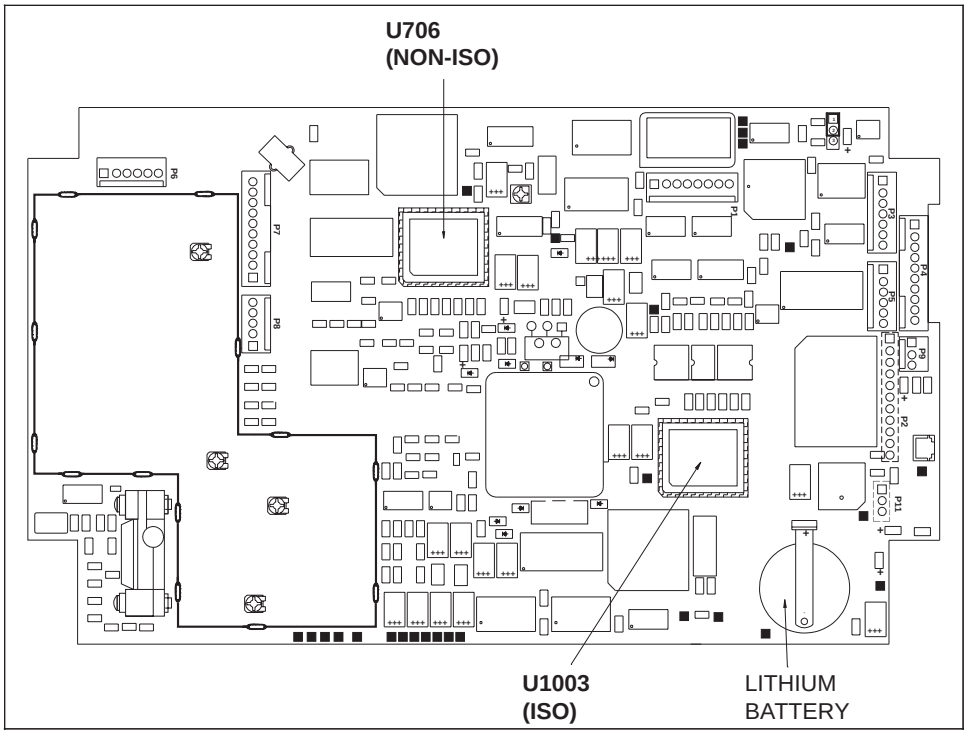

Fig. 5-5. Location of System Software PROMS and Lithium Battery

Servicing Cuff Fittings

Air system integrity in the CUFF channel is essential to accurate measurements. Leaky cuff fittings or air bladder can cause cuff error messages and erroneous cuff measurements. A leak rate test described in the CUFF Channel Functional Verification procedure, Section 2, can help identify air leaks.

WARNING

Use of CUFF channel with leaking cuff hose fittings may result in inaccurate non-invasive blood pressure measurements.

Routine wear to the O-ring gasket located within the threaded fitting on the cuff hose requires occasional replacement of the gasket to ensure system air-seal integrity. Replace gasket according to the following instructions.

1. Disconnect the cuff hose from the monitor's cuff connector.
2. Using pliers, pull off the metal fitting from the cuff hose as shown in Figure 5-6.
3. Using cutters, cut approximately 1/2" off the cuff hose.

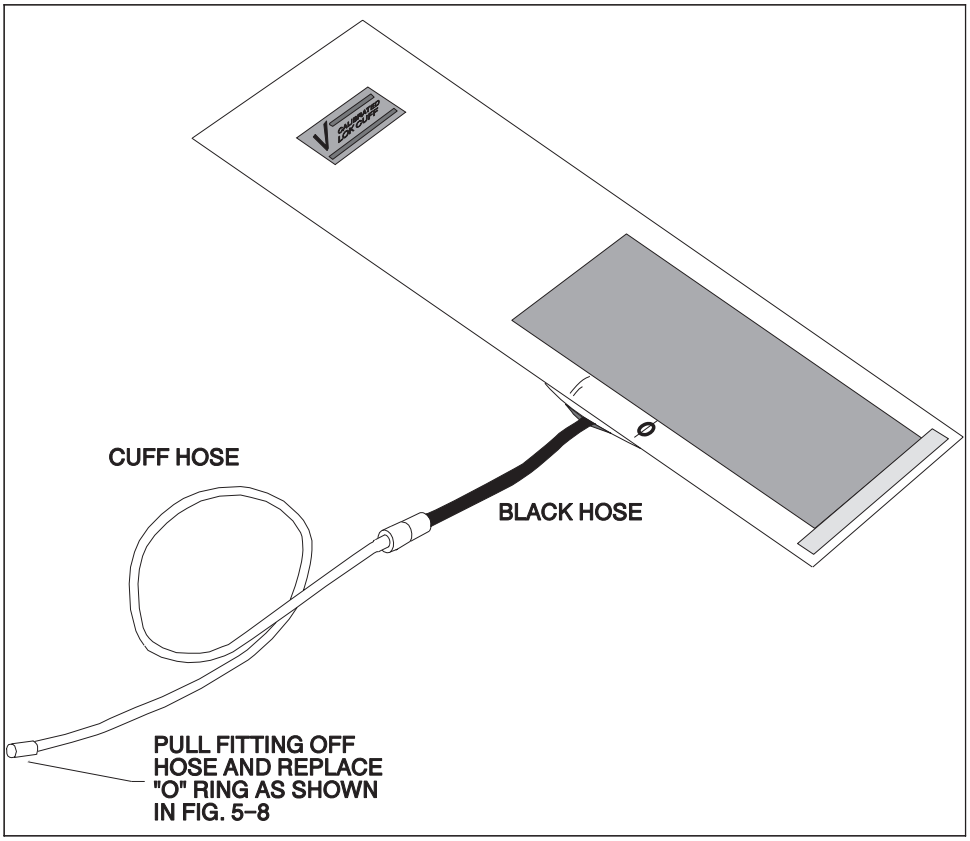

Fig. 5-6. Replacing Cuff Hose Fittings

4. Using a small screwdriver, remove the C-clip from the fitting as shown in Figure 5-7.

5. Remove the knurled nut from the fitting.

   The O-ring gasket is now accessible.

6. Remove the O-ring gasket and replace it with one from the kit (see Table 8-1 for part number of NIBP O-Ring Kit).

   Take care while installing a new O-ring gasket not to “nick” or otherwise damage the new gasket.

7. Reassemble the fitting with the knurled nut and C-clip.

8. Press the fitting back onto the cuff hose.

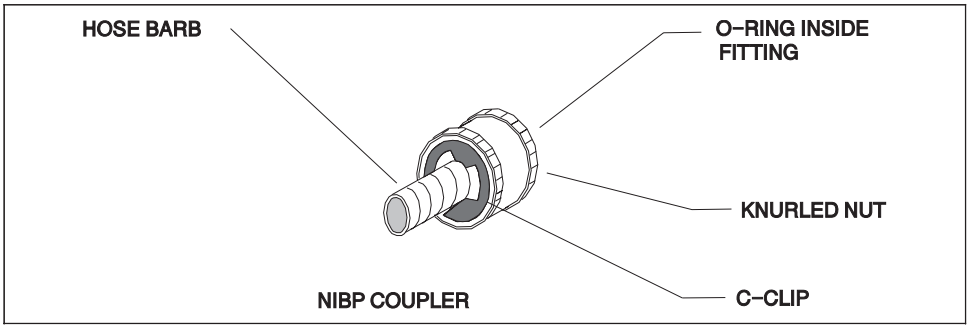

Fig. 5-7. Disassembling the Metal Cuff Fitting

Replacing the Main Board

This section provides instructions on removing and installing a Main Board.

CAUTION

Work only at a static-protected work station while disassembling the Propaq.

The Main Board is secured to the Propaq front chassis by five screws. When removing the Main Board, note the location of cables and screws and screw lengths. Handle the protective insulating paper carefully to avoid damaging it.

Removing Main Board

1. If an expansion module is attached to the monitor, separate the two according to the procedures in **Separating Expansion Module from Monitor** in this section.

2. Open the monitor as described in **Opening the Monitor** in this section.

   Be sure to disconnect the pressure transducer tubing before opening the monitor more than two inches.

3. Disconnect all cables from the Main Board (Figure 5-8).

4. Remove the five screws securing the Main Board to the front chassis. Note that the two longer screws hold the plastic support spacer.

   Do not attempt to remove the Main Board yet. Although the Main Board is not secured to the front chassis, it is still connected to the Main Interconnect board by one or two flexible cables on the back side of the board.

5. Lift the Main Board about two inches.

   CAUTION

   The flexible, cables depending on type, to be removed in the next step have pin connectors that can become bent if the cables are improperly removed.

6. Reach under the Main Board and carefully disconnect the flexible cable by using tweezers or needle-nose pliers to pull the cables straight down away from the Main Board.

   Take care not to bend the pins on the ends of the cables.

7. Carefully lift out the Main Board.

   Key contact areas are located on the opposite side of the Main Board. Flexible key contacts from the front panel buttons often “stick” to the Main Board as it is removed. These flexible contacts should be removed from the board and set aside.

8. **For EL display monitors—**to gain access to the components on the back side of the main board, you must also remove the ESIS shield board, and/or the small paper insulator.

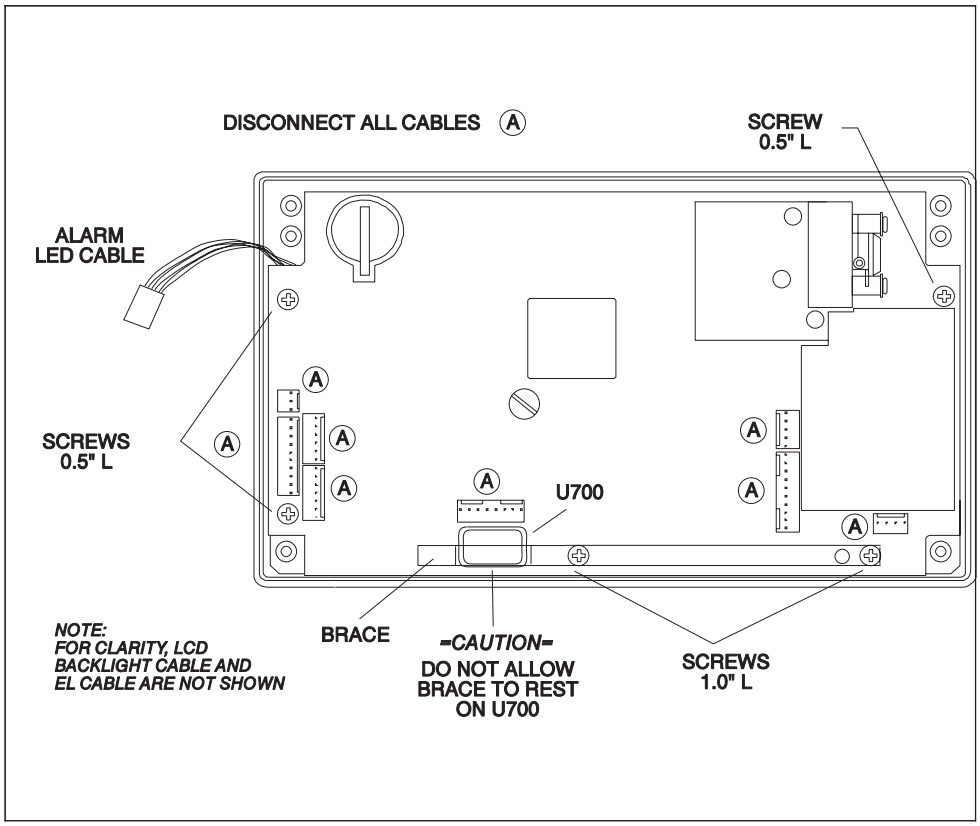

Fig. 5-8. Main Board Screws, Connectors and Cables

The nylon rivets that hold them may be removed by pushing the center pin back through the spread ends of the rivet with the blade of a small screwdriver until the spread ends relax enough to allow the shield board or insulator to be removed. The center pins of the rivets do not have to be completely removed to achieve this, only lifted about 0.075". The ground wire connection between the ESIS shield and main boards must be unsoldered as well. If you are swapping a new main board for the old one, you must also remove the nylon bumper located between the transformer and the opto isolators. The ESIS shield board, paper insulator, bumper and rivets must all be replaced, or transfered to a new board. Refer to Section 7, *Diagrams,* Figure 7-42 (partial assembly drawing 824-0211-XX, Sheet 4).

9. **For LCD Display monitors—**to gain access to components on the back side of the main board, you must first remove the large paper insulator and nylon hardware and save them for return to the old main board, or for use with a new main board. Refer to Section 7, *Diagrams,* Figure 7-43 (partial assembly drawing 824-0218-XX, Sheet 4).

Installing Main Board

CAUTION

When handling the Main Board, do not touch the button contact surfaces. These surfaces should remain clean and oil-free. If you do touch them, clean them with a cotton swab dipped in isopropyl alcohol or freon.

1. **For EL display monitors—**When installing the EL display main board. Refer to Section 7, *Diagrams,* Figure 7-42 (partial assembly drawing 824-0211-XX, Sheet 4).
   - the large paper insulator is in place and properly fastened to the Main Interconnect Board with the two plastic fasteners,
   - the ESIS shield board and small paper insulator are properly fastened to the back of the main board,
   - the ESIS shield ground wire is soldered,
   - the nylon bumper is in place.
2. **For LCD display monitors—**When installing the LCD display main board. Refer to Section 7, *Diagrams,* Figure 7-43 (partial assembly drawing 824-0218-XX, Sheet 4). Check that the large protective paper insulator is wrapped around the main board, and that the nylon screws and washers are properly mounted.
3. Set the five flexible key contacts in the openings to the pushbutton housings. The contacts should be centered on the button with the protrusion entering the button cavity.

   Take care that key contacts do not fall out of place when continuing this procedure.
4. Carefully connect the flexible cables to the Main Board.

NOTE

EL display flex cables must be properly Z-folded as shown in Section 7, Diagrams, Figures 7-44 and 7-45 (partial assembly drawing 824-0226-XX, sheets 1 and 2) to preserve EMI and HI-POT performance.

5. Check the routing of the alarm LED cable as shown in Figure 5-8.

   The routings of these cables are critical to prevent pinching of the cables when the Main Board is secured to the front chassis.
6. Set the Main Board in place, watching the alignment of the flexible key contacts and Main Board.

NOTE

Using tweezers in the next steps to place the screws can make screw placement easy.

CAUTION

Use caution when positioning the plastic brace and tightening the screws, as described in the next three steps, to avoid damaging the U700 oscillator located under the brace (see Figure 5-8).

7. Place the screws in the Main Board, beginning with the two one-inch screws that go through the plastic brace.
8. Before tightening the screws, check that the brace is in place (not caught on the lip of U700) and check the routing of the alarm LED cable.
9. Tighten (7 in-lbs) the screws securing the Main Board.
10. Set the Propaq rear chassis next to the front chassis and reconnect all cables to the Main Board.
11. Close the monitor as described in **Closing the Monitor** in this section.

NOTE

To preserve EMI performance, the portion of the large paper insulator sheet with the foam section on it must be between the main board and the cables that go from the Main board P3, P4, P5 to the rear chassis.

12. If an expansion module was attached, re-attach it as described in **Attaching the Expansion Module** in this section.

Replacing EL Front Panel Components

The EL Front Panel components discussed here are referenced in Section 7, *Diagrams*, Figures 7-44 and 7-45 (partial assembly drawing 824-0226-XX, sheets 1 and 2).

CAUTION

The EL Display Subassembly cannot be removed without the possibility of causing damage to the electrically-conductive inner surface of the EL display filter.

The conductive silicone O-ring gasket between the EL display module and display filter tends to remove the delicate gold coating from the filter when the gasket is peeled up. Furthermore, the gasket seems to stick equally well to the display module and filter, so that where separation will occur is uncertain. If electrical contact with the filter is degraded sufficiently, the display's EMI may interfere with ECG and/or SpO_2 monitoring if their patient cables pass near the display.

If you find it necessary to disassemble the front panel, first contact Protocol Systems, Inc., Technical Services Department, for advice.

Do NOT disassemble the EL Display Module.

Replacing the Recharger Board

CAUTION

Work only at a static-protected work station while disassembling the Propaq. The Recharger Board is secured to the Propaq rear chassis by four screws. When removing the Recharger Board, note the location of cables, plumbing, and screws and screw lengths.

Removing Recharger Board

1. If an expansion module is attached to the monitor, separate the two as described in **Separating Expansion Module From Monitor** in this section.
2. Open the monitor as described in **Opening the Monitor** in this section.

   Be sure to disconnect the pressure transducer tubing before opening the monitor more than one inch.
3. Disconnect all cables from the Main Board (Figure 5-8).

   The Propaq front and rear chassis should now be separated. Place the front chassis off to the side.
4. Disconnect the air tubing attached to the valves and pump (Figure 5-9).
5. Disconnect all cables from the Recharger Board as shown in Figure 5-9. Note cable routing for reinstallation.

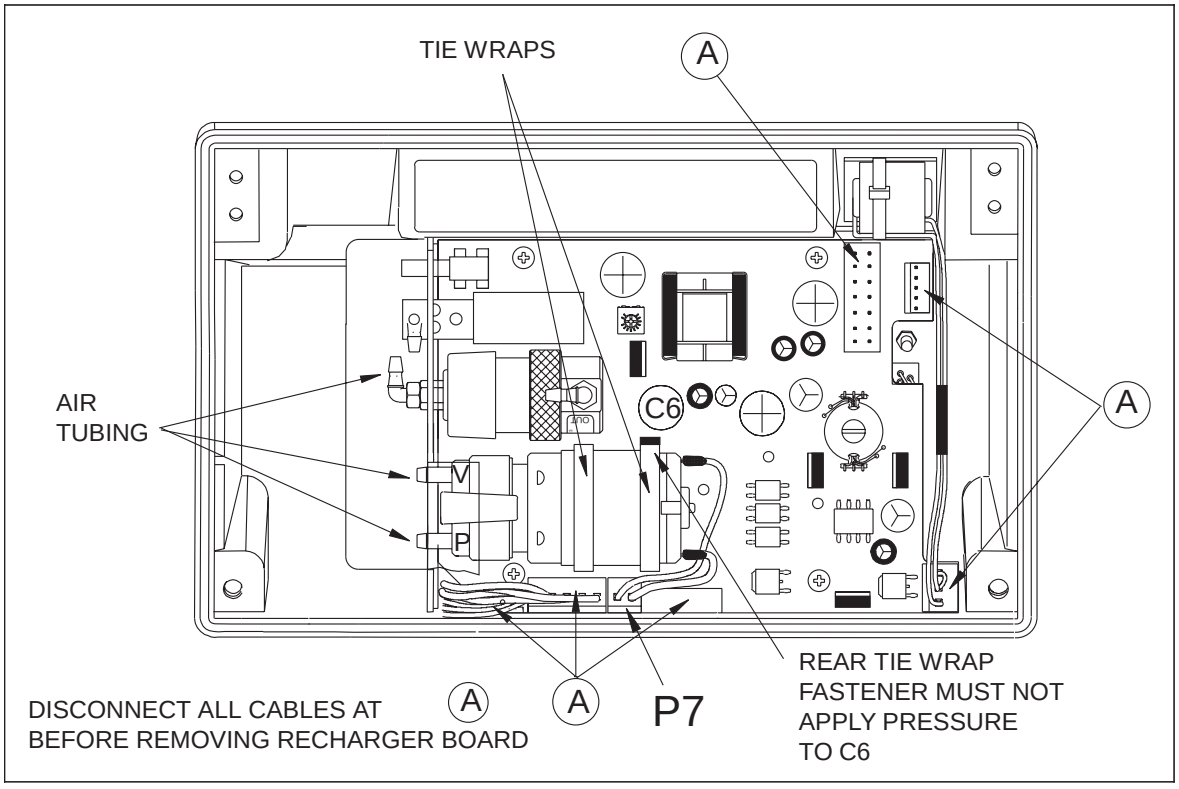

Fig. 5-9. Recharger Board Screws, Connectors & Cables

6. Move cables out of the way.
7. Remove the four screws securing the Recharger Board to the rear chassis.
8. Carefully lift out the Recharger Board.
9. Remove the protective insulating paper from the board.

   The protective paper should be saved for installing the new Recharger Board.

NOTE

If the pump needs to be replaced, see replacement instructions in this section. Return to ***Installing Recharger Board*** *below when replacement has been done.*

Installing Recharger Board

1. Place the protective insulating paper on the Recharger Board.
2. Move all cables out of the way.

CAUTION

As you set the board in place in the next step, take care around the power switch. If the Recharger Board binds against the switch solder points, the solder points can become damaged if force is applied to the board.

3. Set the Recharger Board in place, carefully routing the cables.
4. Set the screws in place.
5. Align the board and protective insulating paper, and recheck the routing of all cables.
6. Tighten all screws.
7. Reconnect all cabling and plumbing.
8. Reconnect all cables between the Recharger and Main Boards.
9. Close the monitor as described in **Closing the Monitor** in this section.
10. If an expansion module was attached, re-attach it as described in **Attaching the Expansion Module** in this section.

Replacing the Pump

CAUTION

Work only at a static-protected work station while disassembling the Propaq.

Removing Pump

1. Remove the Recharger Board as described in **Removing Recharger Board** in this section.
2. With the Recharger Board out of the rear chassis, unplug the pump cable from the Recharger Board.

   New wires and connector are provided with the replacement pump kit.
3. Cut the tie wraps securing the pump to the Recharger Board.
4. Lift pump from board, and remove old tie wraps from support brackets.

Installing Pump

1. Slide new tie wraps into support brackets (install wraps from the right).
2. Set the pump onto the Recharger Board, oriented so that ports are down (nearest board and support brackets; see Figure 5-10).
3. Secure the pump to the Recharger Board with tie wraps, aligning the fastener ends and cutting excess ends from tie wraps as shown in Figure 5-10. Position the rear fastener so as to avoid putting pressure on capacitor C6 (shown in Figure 5-9).

   (The tie wrap fasteners must be placed as shown in the figures to allow the monitor to properly close.)

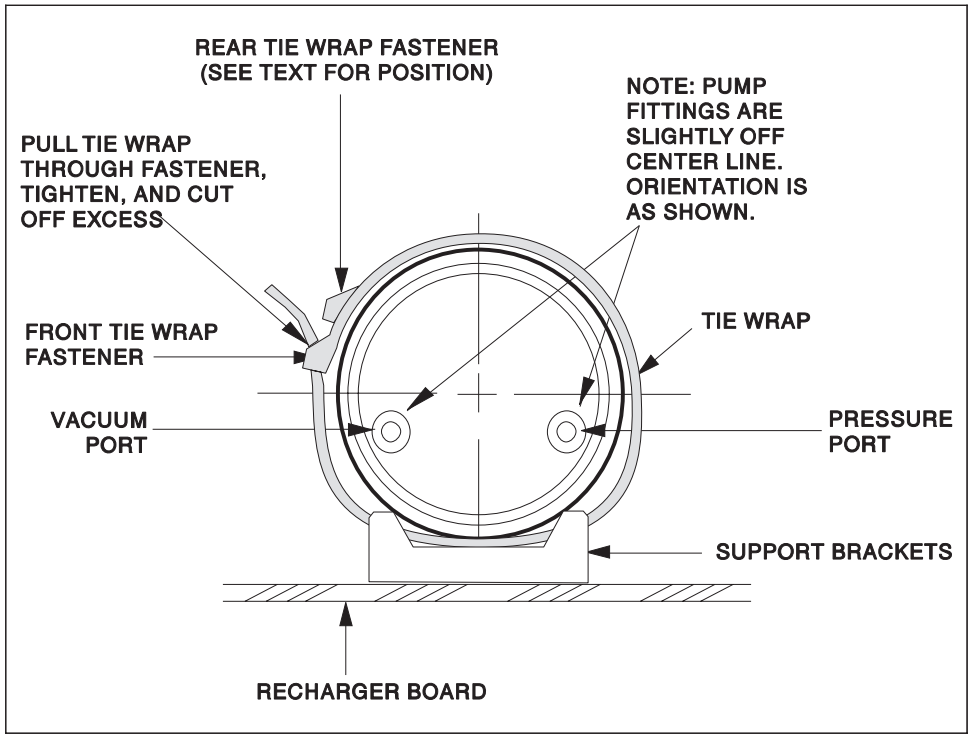

Fig. 5-10. Proper Pump Orientation

4. Plug in the pump cable to connector P7 on the Recharger Board (see Figure 5-9).
5. Install the Recharger Board as described in **Installing Recharger Board** in this section.
6. If an expansion module was attached, re-attach it as described in **Attaching the Expansion Module** in this section.

Replacing the Side Panels

Propaq side panels are complete assemblies requiring only to be set in place, secured, and the cables or plumbing connected.

Side panels are sealed to the Propaq rear chassis with an adhesive O-ring gasket. A new gasket is provided with the new side panel kit. Refer to Section 7, *Diagrams*, Figure 7-46 (partial 824-0230-XX, Sheet 3) when removing or installing side panels.

Removing Side Panels

1. Open the monitor as described in **Opening the Monitor** in this section.
2. **To Remove Right Side Panel—**remove the Recharger Board as described in **Removing Recharger Board** in this section; cut and remove the tie wrap securing the coil connected to the side panel.

   Remove the two right side panel clamps. They can be removed by inserting the end of a needle-nosed pliers in the small hole in the end of the clamp and pulling outward. See step 4.
3. **To Remove Left Side Panel**—disconnect plumbing at the pump and valve; disconnect the cables between side panel and Main Board.

   Remove the U-shaped clamp that secures the left side panel assembly. Place the end of a flat-bladed screwdriver between the metal clamp and the side panel assembly and rotate the screwdriver to loosen the clamp. Using a long-nosed pliers, slide the clamp free.
4. Carefully press the side panel out of the rear chassis. There is an adhesive O-ring gasket around the side panel which requires considerable force to separate. DO NOT pry against components!!
5. If replacing the left side panel, disconnect all plumbing from the side panel. Note cable routing for reinstallation.

   Save the plumbing for reconnection to the new side panel.

Installing Side Panels

1. Clean all O-ring gasket material from the rear chassis where the side panel is to be installed. (The adhesive side of “duct tape” can be used to pull away old gasket residue.)
2. On the new side panel, remove the protective paper from the gasket attached to the side panel.

NOTE

Uncovering the protective paper exposes the adhesive on the O-ring gasket. Do not touch or otherwise contaminate the adhesive, or the adhesive may not properly seal the side panel.

3. Set the side panel in place. Slightly bend up wires at the left side panel P1 and P2 pressure connector pins to allow proper fit.

   Make sure the side panel sets all the way in place (it should be flush with the exterior of the rear chassis). If not properly fitted, the clamp securing the side panel will not be allowed to seat.

4. Apply slight pressure to seal the side panel in the rear chassis.

CAUTION

Do not force the clamp in the next step. Forcing it may damage the side panel or rear chassis.

5. Carefully slide the clamp(s) in place. Detent(s) must press against plastic chassis.

   If the clamp requires excessive pressure to slide in place, remove the clamp and check the side panel to be sure it is completely seated.

6. Connect all plumbing and cables. Refer to Figure 7-1 and Section 7, *Diagrams*, Figures 7-46, 7-47, and 7-48 (partial 824-0230-XX, Sheets 3, 4, and 5) for proper connections.

7. If installing the right side panel, install a new tie wrap inside the rear chassis, dress coil leads as shown in 824-0230-XX, Sheet 5, and secure the coil to the side panel.

   To preserve EMI performance the cables must be routed as follows:

   – the cables leading to P3 and P5 of the main board must be routed over the top of the right side panel assembly

   – the cable to P4 of the main board must be routed under the bottom of the right side panel assembly

   Install the Recharger Board as described in **Installing Recharger Board** in this section.

8. Close the monitor as described in **Closing the Monitor** in this section.

9. If an expansion module was attached, re-attach it as described in **Attaching the Expansion Module** in this section.

Separating Expansion Module From Monitor

The Monitor is secured to the expansion module with four screws as shown in Figure 5-11. Also refer to Section 7, *Diagrams*, Figure 7-37 (partial 824-0208-XX, Sheet 4).

NOTE

Besides the four screws securing the monitor, four additional screws secure the rear panel to the expansion module chassis. Do not remove these screws.

1. Using a Phillips screwdriver, remove four screws (identified as A in Figure 5-11) from the expansion module rear panel.

WARNING

The Propaq sealed lead-acid battery pack is capable of quickly delivering dangerously high currents if improperly handled, misused, or abused. These current levels may burn skin or damage the Propaq. Use extreme caution when handling the battery pack in the next steps.

2. Slide the monitor forward until you can disconnect the battery pack cable from the monitor's power cable (Figure 5-12).

   The battery pack should remain in the expansion module chassis.

3. Slide the monitor forward until it can be completely separated from the expansion module.

The expansion module can now be disassembled according to the instructions in this section.

CAUTION

Further disassembly of the Propaq or expansion module should be done at a static-protected work station. See the static discharge warning at the beginning of this section.

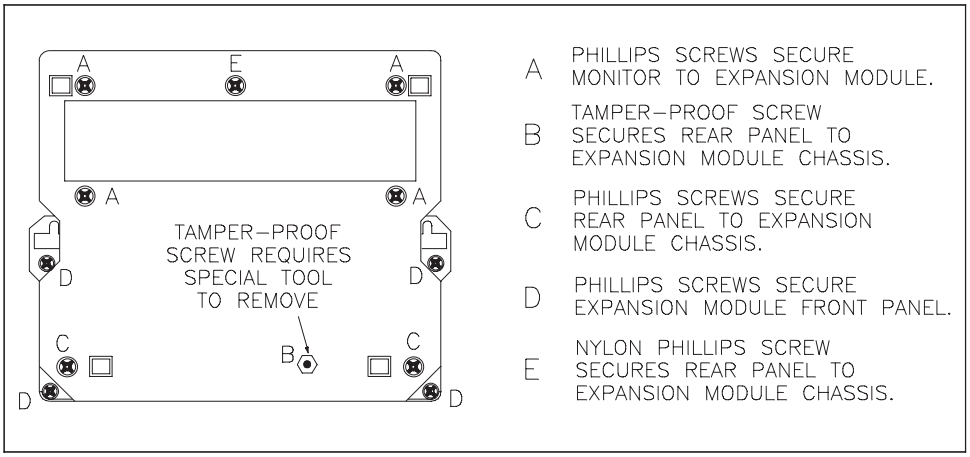

Fig. 5-11. Expansion Module Securing Screws

Attaching Expansion Module

The following information describes how to attach an expansion module to a Propaq monitor.

WARNING

The Propaq sealed lead-acid battery pack is capable of quickly delivering dangerously high currents if improperly handled, misused, or abused. These current levels may burn skin or damage the Propaq. Use extreme caution when handling the battery pack in the next steps.

1. Slide the assembled monitor onto the expansion module as shown in Figure 5-12.
2. With the monitor and expansion module separated a few inches, connect the battery cable to the monitor power cable as shown in Figure 5-12.
3. Slide the monitor completely onto the expansion module.
4. Secure the monitor to the expansion module with the four screws removed earlier.

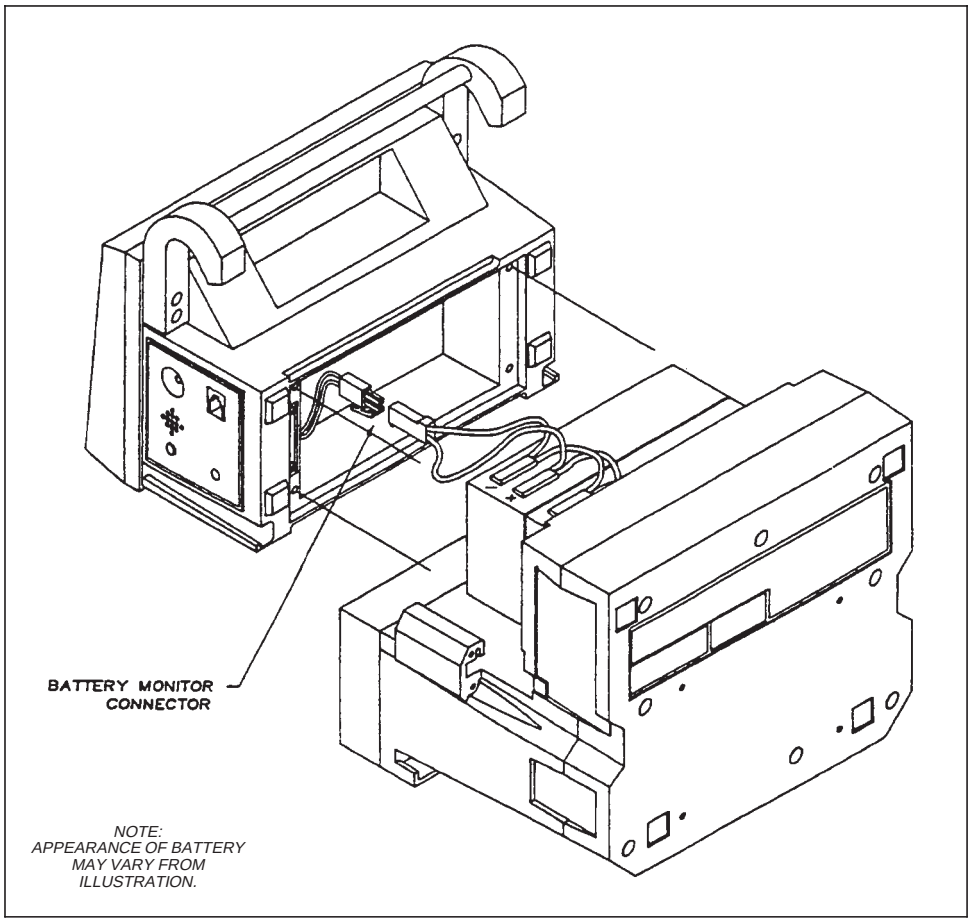

Fig. 5-12. Disconnecting Monitor From Expansion Module/Battery Pack

Opening Expansion Module

NOTE

The expansion module rear panel is secured to the expansion module chassis by four screws (Figure 5-11). One of these screws is a tamper-proof screw (indicated as B in Figure 5-11) that requires a special tamper-proof screwdriver tip to remove. (See Table 3-2).

1. Separate the expansion module from the monitor as described in **Separating Expansion Module From Monitor** in this section.

WARNING

The Propaq sealed lead-acid battery pack is capable of quickly delivering dangerously high currents if improperly handled, misused, or abused. These current levels may burn skin or damage the Propaq. Use extreme caution when handling the battery pack in the next steps.

2. Carefully slide out the battery pack from the expansion module chassis.
3. Disconnect the battery pack cable from the expansion module power connector (Figure 5-13).

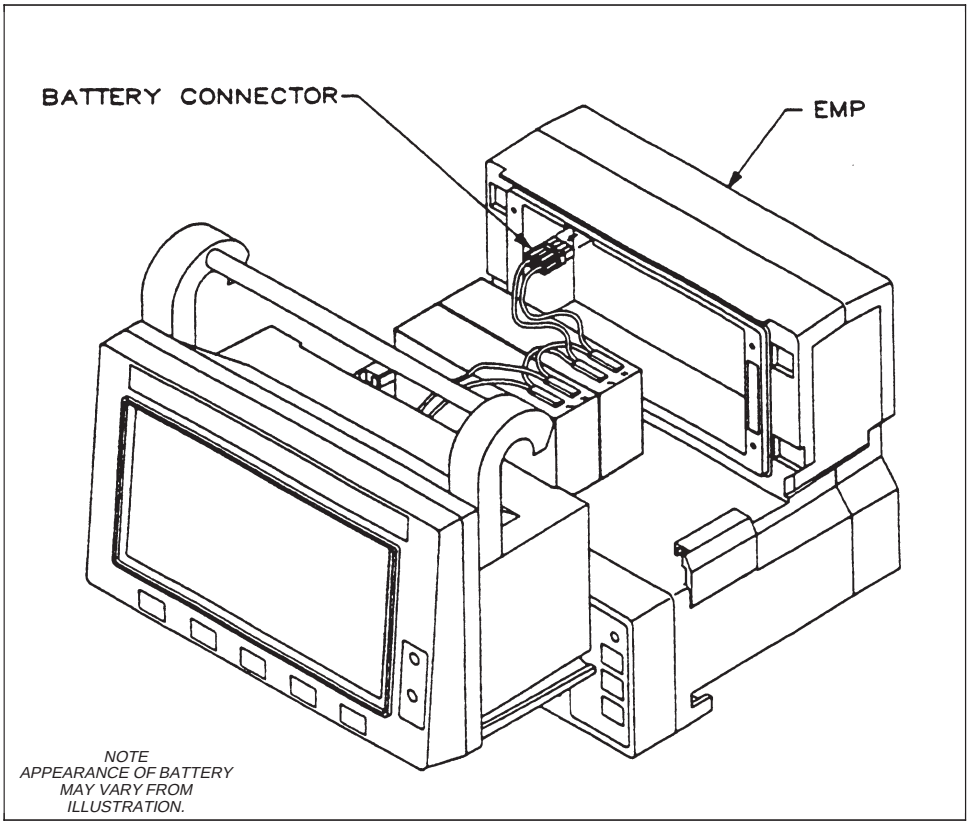

Fig. 5-13. Disconnecting Battery from Expansion Module

4. Set the battery pack aside.
5. Using the special tamper-proof screwdriver, remove the tamper-proof screw from the expansion module rear panel.
6. Remove the remaining three Phillips screws.

   Note the lengths and positions of the three screws.
7. Remove the expansion module rear panel from the chassis.

NOTE

The rear panel is sealed to the chassis with rubber O-ring gaskets around the perimeter of the rear panel. These gaskets can be reused when reassembling the expansion module. Save these gaskets. Also spacers shown in Figure 5-14 may not be secured to the rear panel and can fall out. As the unit is disassembled set aside the spacers for reuse during reassembly.

Further disassembly of the expansion module can now be done according to the procedures in this section.

CAUTION

Work only at a static-protected work station while disassembling the expansion module any further.

Closing Expansion Module

Make sure all cables are in place and the O-ring gaskets removed earlier are available.

CAUTION

Work only at a static-protected work station while handling the expansion module.

1. Set the rubber O-ring gaskets in their proper places as shown in Figure 5-14.
2. Carefully set chassis onto rear panel, seeing that no O-ring gasket slips out of its channel and becomes pinched between rear panel and chassis.

CAUTION

To prevent damage to expansion module chassis, make sure that the spacers are in place as shown in Figure 5-14. The chassis may crack if screws are tightened without the spacers in place. Note that the 5 upper spacers are not used when the SpO_2 module is present.

3. With the rear panel in place, insert the three Phillips screws and the tamper-proof screw (as shown in Figure 5-11) and tighten.
4. Set the battery pack on the rear chassis, leaving enough clearance to connect the battery pack cable to the expansion module power connector (Figure 5-13).

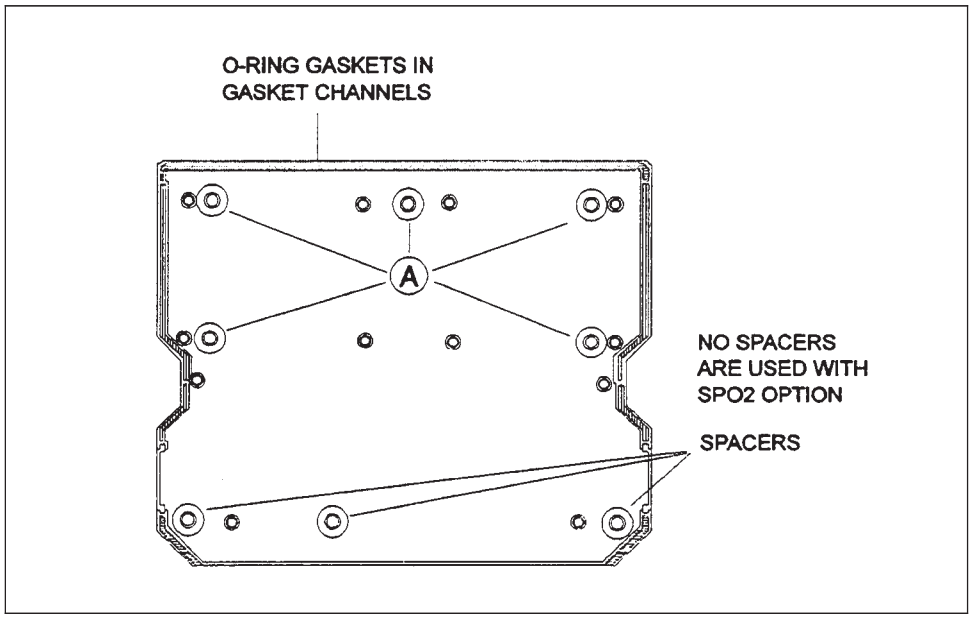

Fig. 5-14. Expansion Module Rear Panel Gasket Channels and O-Ring Gaskets

5. Connect the battery pack cable to the expansion module power connector.
6. Slide the battery pack into the expansion module chassis.
7. Install the monitor as described in **Attaching Expansion Module** in this section.

Replacing the Printer

This section provides instructions on removing and installing the printer mechanism and printer main board. These two components are provided as a replacement unit called the printer assembly.

Removing Printer

Remove the printer assembly according to the following instructions.

CAUTION

Work only at a static-protected work station while disassembling the expansion module.

1. Separate the monitor and expansion module as described in **Separating Expansion Module From Monitor** in this section.
2. Open the expansion module as described in **Opening Expansion Module** in this section.
3. Remove the expansion module front panel as described in **Removing Expansion Module Front Panel** in this section.

4. Disconnect the battery cable from P150 and the SCP/printer cable from P140 on the printer main board. Refer to Section 7, *Diagrams*, Figure 7-39 (partial 824-0208-XX, sheet 6—SpO_2 option with printer) or Figure 7-40 (partial 824-208-XX, sheet 7—CO_2 option with printer).
5. Completely open the paper door.
6. Remove the paper from the printer.
7. Carefully slide the printer assembly out the front of the chassis, noting the proper positioning of the paper door mechanism shown in Figure 5-15.

Installing Printer

1. Completely open the paper door.
2. Turn the printer assembly so the printer mechanism is on the bottom and the printer main board is on top.
3. On the printer assembly, make sure the swivel bracket (labeled "Print Head Latch" in Figure 5-15) is down.
4. Carefully slide the printer assembly into the guides as shown in Figure 5-15, noting that the paper door pin slides into the print head latch on the printer mechanism.

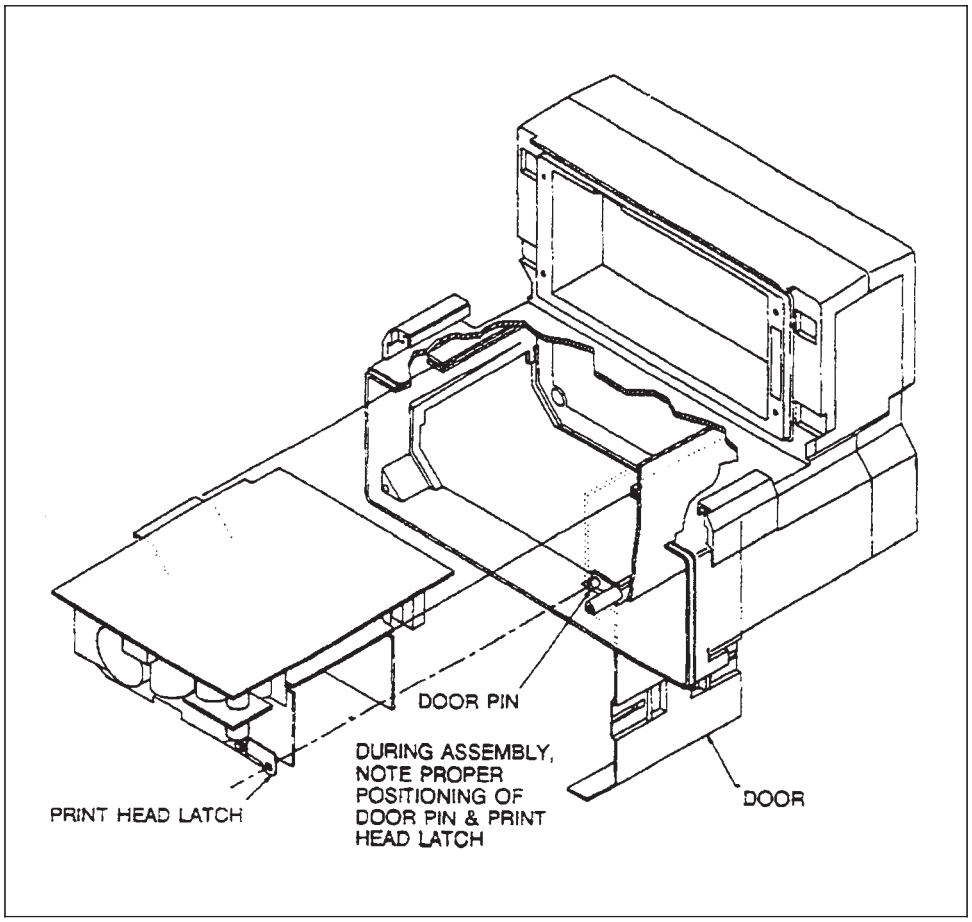

Fig. 5-15. Installing Printer Main Board Into Expansion Module

5. Connect the battery cable and SCP/printer cable to the printer main board. It is important to properly dress the cables. Refer to Section 7, *Diagrams*, Figure 7-39 (partial 824-0208-XX, sheet 6—SpO_2 option with printer) or Figure 7-40 (partial 824-208-XX, sheet 7—CO_2 option with printer).
6. Replace the expansion module front panel as described in **Installing Expansion Module Front Panel** in this section.
7. Close the expansion module as described in **Closing Expansion Module** in this section.
8. Attach the expansion module to the monitor as described in **Attaching Expansion Module** in this section.

Replacing Expansion Module Front Panel

The front panel contains the printer buttons. Like the rear panel, the front is sealed to the chassis with a rubber O-ring gasket. This gasket can be re-used when replacing the front panel.

The expansion module front panel is attached to the chassis with four screws. The expansion module does not need to be separated from the monitor to replace the expansion module front panel.

Removing Expansion Module Front Panel

1. Remove the four screws (D) shown in Figure 5-11.
2. Separate the front panel from the chassis, disconnecting the front panel cable from the expansion module button board.

   Note the rubber O-ring gasket that seals the front panel to the chassis. This gasket should be saved for re-installing on the front panel.

Installing Expansion Module Front Panel

1. Replace the rubber O-ring gasket in the front panel channel.
2. Connect the front panel cable to the expansion module button board.
3. Attach the front panel to the chassis making sure the O-ring gasket does not become pinched between the front panel and chassis.
4. Lay the expansion module on the front panel to keep the front panel in place.
5. Insert four screws securing the front panel to the chassis.
6. Again check that the O-ring gasket is in place and not pinched.
7. Tighten the screws.

Replacing Expansion Module Button Board and Buttons

The expansion module button board has electrical contact areas that detect when an expansion module button is pressed. The front panel buttons are identical to the monitor buttons with the plastic button and flexible contact that touches the contact area on the button board when a button is pressed. When replacing the buttons or button board, refer to Section 7, *Diagrams*, Figures 7-35 and 7-36 (partial 824-0208-XX, sheets 2 and 3).

Removing Button Board and Buttons

1. Remove the expansion module front panel as described in **Removing Expansion Module Front Panel** in this section.
2. Remove the two screws securing the button board to the front panel.
3. To remove the button board, slide a screwdriver between the board and the expansion module front panel near the **PRINTER READY** LED and lift to release the LED from its lens housing.
4. Remove the button board.

   The flexible contacts may attach themselves to the button board contact areas. The flexible contacts can simply be lifted from the board.

   NOTE

   Do not touch the contact areas on the button board or the contact inside the flexible contacts. Touching these areas may deposit oil on them, reducing the ability of the parts to make electrical contact. If you do touch these areas, clean them with isopropyl alcohol or freon.

5. Each button is held with a Phillips screw.

Installing Button Board and Buttons

1. If buttons were removed, reinstall as shown in Figures 7-35 and 7-36.
2. Set the flexible contacts in place over buttons shown in Figure 5-16.
3. Set the button board in place over the buttons.
4. Secure the button board with the two screws.
5. Install the front panel as described in **Installing Expansion Module Front Panel** in this section.

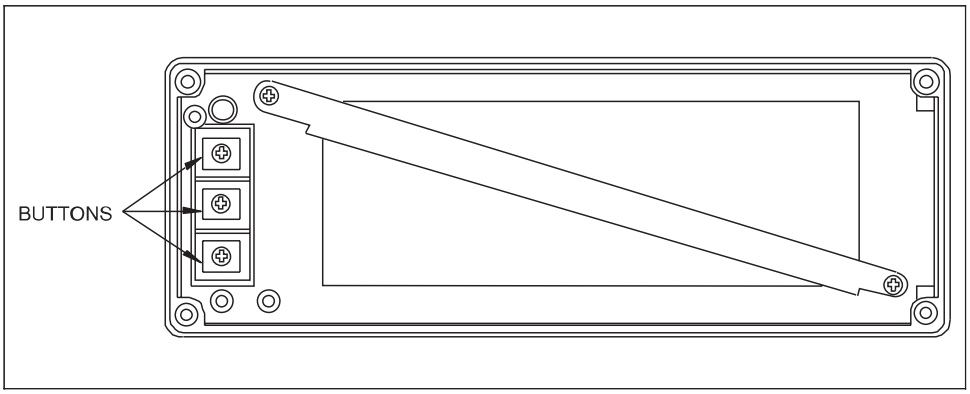

Fig. 5-16. Expansion Module Front Panel (Rear View)

Separating SpO_2 Module From Monitor

The monitor is secured to the SpO_2 module with four screws as shown in Section 7, *Diagrams,* Figure 7-34 (partial 824-0204-XX, Sheet 2).

1. Using a Phillips screwdriver, remove the four screws and eight washers from the SpO2 module rear panel (Figure 7-34).

WARNING

The Propaq sealed lead-acid battery pack is capable of quickly delivering dangerously high currents if improperly handled, misused, or abused. These current levels may burn skin or damage the Propaq. Use extreme caution when handling the battery pack in the next steps.

2. Place the monitor face down on the work surface.

NOTE

When the SpO_2 module is removed, the battery will remain in the monitor cavity.

3. Slide the SpO_2 module forward until it can be completely separated from the monitor and battery.

   The SpO_2 module can now be disassembled according to the instructions in this section.

CAUTION

Further disassembly of the Propaq should be done at a static-protected work station. See the static discharge warning at the beginning of this section.

Attaching the SpO_2 Module

The following information describes how to attach an SpO_2 module to a Propaq monitor. Refer to Section 7, *Diagrams*, Figure 7-34 (partial 824-0204-XX, Sheet 2).

WARNING

The Propaq sealed lead-acid battery pack is capable of quickly delivering dangerously high currents if improperly handled, misused, or abused. These current levels may burn skin or damage the Propaq. Use extreme caution when handling the battery pack in the next steps.

1. Verify that the continuous O-ring gasket (shown in Figure 5-17) is in place.
2. Slide the SpO_2 module completely onto the monitor and battery as shown in Figure 7-34.
3. Secure the monitor to the SpO_2 module with the four screws removed earlier.

Opening the SpO_2 Module

Refer to Section 7, *Diagrams*, Figure 7-33 (partial 824-0204-XX, Sheet 1).

1. Separate the SpO_2 module from the monitor as described in **Separating SpO2 Module From Monitor** in this section.

   Two tabs secure the SpO_2 module rear panel to the SpO_2 module chassis (Figure 5-17).

2 .Using a small screwdriver or your finger, press on each of the tabs inside the SpO_2 module chassis (Figure 5-17) while applying pressure to separate the rear panel from the chassis. (When separating rear panel from chassis, make sure that side panels remain seated in rear panel.)

3. Once the tabs allow the rear panel to be removed, separate the rear panel from the chassis.

NOTE

The rear panel is sealed to the chassis with rubber O-ring gaskets (Figure 7-33). These gaskets can be reused when re-assembling the SpO_2 module. Save these gaskets.

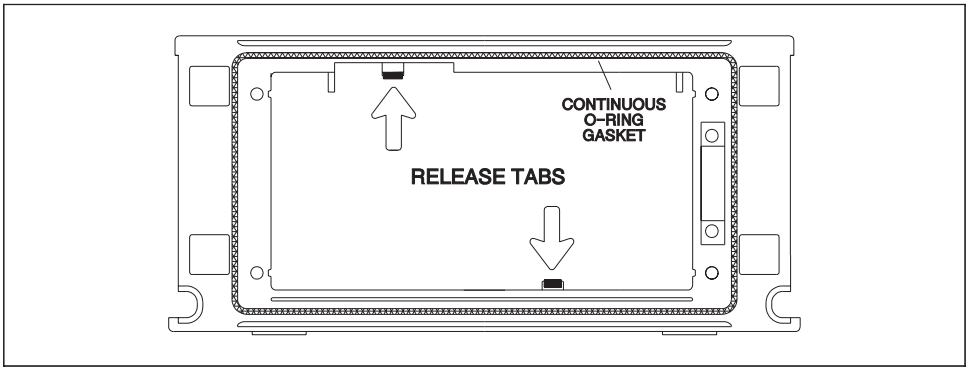

Fig. 5-17. Securing Tabs

Further disassembly of the SpO_2 module can now be done according to the procedures in this section.

CAUTION

Work only at a static-protected work station while disassembling the expansion module any further.

Closing the SpO_2 Module

Refer to Section 7, *Diagrams*, Figure 7-33 (partial 824-0204-XX, Sheet 1).

CAUTION

Work only at a static-protected work station while assembling the expansion module.

1. If necessary, set the rubber O-ring gaskets in their proper places as shown in Figure 7-33.
2. Carefully set the rear panel onto the chassis, watching that no O-ring gasket slips out of its channel and becomes pinched between rear panel and chassis.
3. Press the rear panel onto the chassis until the tabs snap in place to secure the two pieces.
4. Attach the monitor as described in **Attaching the SpO2 Module** in this section.

Replacing the SpO_2 Circuit Boards

The following instructions describe how to replace the two SpO_2 circuit boards in the SpO_2 Module and in the Expansion Module without the CO_2 option. Instructions for replacing SpO_2 boards in an Expansion Module with the CO_2 option are described in **Replacing CO2/SpO2 Circuit Boards** in this section.

For SpO_2 Module installations refer to Section 7, *Diagrams*, Figure 7-33 (partial 824-0204-XX, Sheet 1).

For SpO_2 Expansion Module installations refer to Section 7, *Diagrams*, Figure 7-39 (partial 824-0208-XX, Sheet 6).

CAUTION

When replacing the SpO_2 circuit boards, remove both circuit boards with the patient connector side panel still connected. Attempting to disconnect the patient connector side panel from the SpO_2 circuit board before removing both circuit boards with the side panel can damage the flex-cable between the side panel and the SpO_2 circuit board.

Removing SpO_2 Circuit Boards

1. Open SpO_2 Module or Expansion Module as described above.

CAUTION

In the next step, the connector securing clips are fragile and will break if not handled carefully.

2. Disconnect the expansion cable and printer main board cable from the SpO_2 SCP board by carefully releasing the securing clips and unplugging the connectors. See Figure 7-33 (without printer or CO_2 options) or Figure 7-39 (with printer but without CO_2).
3. Disconnect the speaker cable from the SCP board.
4. Remove the speaker side panel from the chassis.
5. Remove the two screws securing the SCP board and SpO_2 board to the rear panel.
6. Carefully lift out the two circuit boards and patient connector side panel as a unit. (The side panel easily slides out.)
7. Using equal pressure on both sides of the connector, carefully disconnect the patient connector side panel connector from the SpO_2 circuit board.
8. Disconnect the two circuit boards by carefully pulling them apart.

Installing the SpO_2 Circuit Boards

Refer to Figure 7-33 or 7-39.

1. Plug the two circuit boards together.
2. Connect the patient connector side panel connector to the SpO_2 circuit board.
3. Set the two circuit boards and side panels in place, making sure that the boards are seated on the support tabs.
4. Secure the boards with the two screws removed earlier.
5. Reconnect the printer and expansion cables to the SCP board.
6. Close the SpO_2 module or Expansion Module as described above.
7. Attach the monitor to the SpO_2 module or expansion module as described above.

Replacing the CO_2/SpO_2 Circuit Boards

The following instructions describe how to replace the two CO_2/SpO_2 circuit boards in the Expansion Module with the CO_2 option. Instructions for replacing SpO_2 boards in SpO_2 Module and Expansion Module without the CO_2 option installed are described above in **Replacing SpO_2 Circuit Boards** in this section.

Refer to Section 7, *Diagrams*, Figure 7-40 or 7-41 (partial 824-0208-XX, Sheets 7 or 8, with or without printer, respectively) when removing or installing the CO_2/SpO_2 circuit boards.

CAUTION

When replacing the CO_2/SpO_2 circuit boards, remove both circuit boards with the patient connector side panel still connected. Attempting to disconnect the patient connector side panel from the SpO_2 circuit board before removing both circuit boards with the side panel can damage the flex-cable between the side panel and the SpO_2 circuit board.

Removing the CO_2/SpO_2 Circuit Boards

1. Open Expansion Module as described above.

CAUTION

In the next step, the connector securing clips are fragile and will break if not handled carefully.

Refer to Figure 7-40 (with printer) or Figure 7-41 (without printer) while performing the following steps.

2. Disconnect the expansion cable and printer main board cable from the CO_2 board by carefully releasing the securing clips and unplugging the connectors.
3. Carefully unplug the flex-cable connector J5 from the CO_2 board.
4. Disconnect the speaker cable from the CO_2 board.
5. Remove the speaker side panel from the chassis.
6. Remove the three screws securing the CO_2 board and SpO_2 (Minisoom) board to the rear panel.
7. Carefully lift out the two circuit boards and patient connector side panel as a unit. (The side panel easily slides out.)
8. Using equal pressure on both sides of the connector, carefully disconnect the patient connector side panel connector from the SpO_2 (Minisoom) circuit board.
9. Disconnect the two circuit boards by carefully pulling them apart.

Installing the CO_2/SpO_2 Circuit Boards

Refer to Figure 7-40 (with printer) or Figure 7-41 (without printer) while performing the following steps.

1. Plug the two circuit boards together.
2. Connect the patient connector side panel connector to the SpO_2 circuit board.
3. Set the two circuit boards and side panels in place, making sure that the boards are seated on the support tabs.
4. Secure the boards with the three screws removed earlier.
5. Reconnect the flex-cable connector J5 to the CO_2 board.
6. Reconnect the printer and expansion cables to the CO_2 board.
7. Close the SpO_2 module or Expansion Module as described above.
8. Attach the monitor to the SpO_2 module or expansion module as described above.

Replacing Side Panels

The side panels easily slide out once the chassis and rear panel are separated. If the patient connector side panel is being replaced, this side panel and the two circuit boards must be removed together before disconnecting the side panel from the circuit board. See **Replacing the SpO_2 Circuit Boards** or **Replacing the CO2/SpO_2 Circuit Boards** earlier. If the speaker side panel is being replaced, simply separate the chassis and rear panel as described earlier in this section, disconnect the speaker from the SCP or CO_2 board, and slide out the speaker side panel.

Section 6

Theory of Operation

Introduction

This section provides descriptions of the basic Propaq Series electronics and of three options: Printer, Pulse Oximetry (SpO2), and Capnography (CO_2).

This section is intended as an aid to servicing at the replaceable-module level, and contains only system-level and functional-level circuit descriptions.

Detailed circuit descriptions are included only in the *Schematics & Drawings Set* and options sections, which are orderable separately (see Section 1 for ordering information). Detailed circuit descriptions provide the technician with an extensive description of the Propaq circuitry and describe the parts needed to make repairs at the component level.

When replacing modules or components, refer to Section 5, *Replacement Procedures*. Parts numbers for replaceable parts are located in Section 8.

NOTE

Repair or replacement of the surface-mounted electronic components in the Propaq monitor should only be done by technicians trained to service and repair surface-mount technology electronics. Protocol Systems, Inc. maintains authorized Propaq repair facilities. Contact Protocol Systems, Inc. for more information.

Disassembly and handling of the internal components of the Propaq monitors should be done only at a static-protected workstation. Please read the following warning to protect your equipment.

STATIC DISCHARGE WARNING

Propaq monitors are manufactured with static-sensitive CMOS devices. All calibration, service, and repair must be done at a static-protected work station. Failure to protect against damage due to static discharge may reduce monitor operation life and increase repairs. The monitor should be placed in a static- protected work area, whenever the case is open and the internal electronics are exposed.

NOTE

There are two different options of Propaq Recharger Boards— one for the LCD display option, and one for the EL display option. See Table 6-1 for related drawing, board, and assembly numbers.

There are three different versions of Propaq Main Board. (The version is determined by part number of the main board, not by serial number.) The different versions reflect changes in the ECG pacer detector, in the method of changing the display clock frequency for LCD vs EL display, and in the method of cabling for LCD displays. All board versions are covered in this manual with the differences appropriately noted. See Table 6-1 for related drawing, board, and assembly numbers.

Table 6-1
Schematic, Board, Assembly, Drawing, and Service Kit Part Numbers by Board Type

	Main Brd First Design (EL)	Main Brd Second Design (EL)	Main Board Third Design (EL and LCD)	EL Option Recharger Board	LCD Option Recharger Board	Inter-Connect Board	Printer Board	SpO_2 SCP Board	CO_2 Board
Schematic #	800-0023-00	800-0023-02	800-0023-01	800-0034-00 800-0038-00 3rd Design	800-0033-00 800-0039-00 3rd Design	800-0015-00	800-0024-00	800-0008-00	800-0032-00
Bare Board #	030-0018-00	030-0018-00	030-0030-01	030-0032-00 030-0036-00 3rd Design	030-0032-00 030-0036-00 3rd Design	030-0016-00	030-0023-00	030-0008-00	030-0024-00
***1st Level Assy #**	031-0018-00	031-0018-01	031-0040-00	031-0042-00 1st Design 031-0042-01 2nd Design 031-0046-00 3rd Design	031-0043-00 1st Design 031-0043-01 2nd Design 031-0047-00 3rd Design	031-0016-50	031-0025-01	031-0010-02	031-0029-00
2nd Level Assy #	032-0007-00 English Language only	032-0007-02 English Language only	032-0006-00 LCD 032-0007-01 EL	032-0009-00	032-0008-00	Not Applicable	Not Applicable	Not Applicable	Not Applicable
1st Level Assy Dwg #	824-0197-00	824-0197-00	824-0242-00	824-0246-00 1st Design 824-0246-01 2nd Design 824-0261-00 3rd Design	824-0247-00 1st Design 824-0247-01 2nd Design 824-0260-00 3rd Design	824-0228-00	824-0203-00	824-0108-01	824-0223-00
2nd Level Assy Dwg #	824-0211-00 EL only	824-0211-00 EL only	824-0218-00 LCD 824-0211-01 EL	824-0243-00	824-0243-00	Not Applicable	Not Applicable	Not Applicable	Not Applicable
Service Kit Part Numbers	Not Applicable	Not Applicable	020-0224-xx LCD 020-0225-xx EL	020-0227-xx	020-0226-xx	Not Applicable	Not Applicable	Not Applicable	020-0286-xx

*First level circuit board assembly number is printed on board.

Propaq Monitor

System Description

Refer to Section 7, *Block Diagrams and Cabling*, Figure 7-27, SYSTEM-LEVEL BLOCK DIAGRAM. The Propaq series electronics consist of the monitoring electronics, the power system electronics, and the cuff pneumatics system.

Monitoring Electronics

The monitoring electronics perform these vital functions:

- acquire the physiological signals through coupling devices (electrodes, tranducers, and probes),
- convert the signal to computer data,
- process the data for display and alarm monitoring,
- display the data and any alarm conditions
- convert the data to analog signals for analog output

Although a Propaq monitor operating on internal battery power is totally isolated from any ac mains source, precautions have been taken to isolate the patient side of the monitoring electronics from other parts of the monitor. Isolation is achieved through a transformer and optical couplers that provide the required electrical isolation in accordance with current medical electronics standards. This isolation barrier is clearly indicated in Figure 7-27, SYSTEM-LEVEL BLOCK DIAGRAM.

The isolation barrier divides the monitoring electronics into two parts. The isolated side performs patient signal acquisition through various patient channels, signal multiplexing, analog-to-digital conversion, and data processing and storage (ISO CPU). The non-isolated side controls the display of data, the output of analog data, and the pump and valve for NIBP. (For most functions of NIBP monitoring, the isolated processor is the master processor, and the non-isolated processor is the slave processor.)

Except for the NIBP channel, all patient inputs are electrical. The NIBP channel contains a pressure transducer that converts the cuff pressure to an electric signal for analog-to-digital conversion and processing.

NIBP Pneumatics

Cuff pressure is increased by pumping air into the cuff using a pump and decreased by bleeding the air through a primary electromechanical valve. Cuff pressure is monitored using a transducer to convert the pressure to an electrical signal. Pump and primary valve control is through the non-isolated CPU subsystem.

When the pump runs, the primary valve is closed so air is contained in the cuff. With the pump off and the primary valve closed, a one-way check valve keeps air from leaking back through the pump and deflating the cuff.

To bleed the cuff, the pump remains off and the primary electromechanical valve is opened to allow air to escape to the cuff vent on the left side of the monitor.

A second electromechanical valve (normally closed) and second pressure transducer with a comparator provide a backup safety system to deflate the cuff even during monitor faults.

An air filter between the cuff vent and the air system removes particulates from the air system.

Power Electronics

The Propaq monitors operate from an internal battery. A switching power supply draws energy from the battery for the monitoring electronics and supplies the necessary current at several different regulated and unregulated voltages. Power sources to isolated patient electronics are isolated from the battery and ac mains source.

The Propaq ac power adapter may be plugged in during normal monitor use. The ac adapter provides direct current to a recharger circuit in the monitor for battery recharging. Battery charging occurs whenever the ac power adapter is connected and energized, regardless whether the Propaq is turned on or not.

Functional Description

Circuitry in the Propaq is divided into four major groups. They include the isolated patient circuits, display circuitry, main power supply and battery recharger.

The isolated patient circuits, as shown in Figure 7-28, ISOLATED PATIENT CIRCUITS BLOCK DIAGRAM, contain the analog input circuits, an analog to digital converter, and a microprocessor with associated components.

The non-isolated circuitry as shown in Figure 7-29, NON-ISOLATED CIRCUITS BLOCK DIAGRAM, includes the display microprocessor, display controller, analog output and serial interface. Optical coupling is used to transmit information across the main patient isolation barrier. Operation of the monitor is controlled by 5 soft keys located below the display. The display microprocessor will label the keys and decode the key strokes.

Block diagrams of the EL and LCD display modules are shown in Figure 7-30, DISPLAYS BLOCK DIAGRAM.

Power for the isolated and non-isolated circuitry is supplied by the main switching power supply shown in Figure 7-31, EL RECHARGER & POWER SUPPLIES/DISTRIBUTION DIAGRAM. A specially constructed transformer, T601, is used to bridge the patient barrier and supply power to the isolated patient circuits. Voltages unique to the EL display or the LCD display are generated on the Recharger Board for the appropriate display option.

The battery recharger for the EL option, shown in Figure 7-31, EL RECHARGER & POWER SUPPLIES/DISTRIBUTION DIAGRAM, supplies current to recharge the internal batteries. The battery recharger for the LCD option, shown in Figure 7-32, LCD RECHARGER BLOCK DIAGRAM, operates identically. Both recharger board options contain redundant shutdown circuits for control of the NIBP valves and pump. The recharger will operate from a 10 to 32 V, 10.5 W dc source. Several external power adapters are available from Protocol for operating the Propaq monitors from a variety of mains ac power sources. Use only ac power adapters that are approved for medical applications (e.g., UL544) when operating the monitor from an ac power source.

Power Distribution

Several regulated and unregulated power sources in the Propaq series monitors provide power to several monitor circuits. A power distribution diagram (Figure 7-31) shows the distribution of current from these power sources.

Cabling Diagrams

Figures 7-3 through 7-26 show the cabling and cables for the Propaq series monitors.

Expansion Module and Printer

System Description

The printer shares battery power with the monitor, but contains its own power supply. The printer processor communicates with the monitor's processor over the IPC bus through the expansion connector and cable.

Overview

The Expansion Module is designed to house the Propaq Printer and other circuit boards for additional parameters. The main circuit board in the Printer is the Printer Main Board. The schematic of this circuit board consists of six sheets (Schematic number 800-0024-00) and is provided in the *Schematics & Drawings Set*. An additional circuit board (key panel) in the expansion module with printer front chassis contains the push buttons and LED.

The Printer Main Board is attached to the printer mechanism and should be replaced as a unit with the printer mechanism if repair is needed. The unit is called the printer module.

The Printer Main Board connects to the Propaq, the battery pack, the push buttons on the expansion module front panel, the printer mechanism (motor and print head), and the paper out and head up sensors.

Although the printer has local processing power using an 80C552 microprocessor, the printer receives print data and control information from the Propaq, and the printer sends data to the Propaq. Communication between the two systems (Propaq and printer CPUs) is done by sending and receiving data packets over serial communication lines.

Print Head

The print head assembly contains 5 segments consisting of 64 thermal printing dots each, a 320-bit shift register, and a 320-bit latch. The 320 printing dots cover the width of the printer paper (1 row). Forty bytes of print data are clocked one byte at a time into the shift register from the Printer Main Board. Once the data has been clocked in, it is copied to the latch by a latch enable control signal. Upon printing, only one segment is enabled at one time to conserve power. All segments are enabled within a 5.7 ms period. The enable period of each segment depends on the head temperature, which is sensed by the CPU through a head temperature sensing circuit. The paper moves a column width in the time of one print cycle.

Functional Description

The Printer Main Board consists of five functional blocks: Printer CPU, Printer Driver, Printer Logic, System Power, and Printer Power. (See Figure 6-1.) These blocks are interconnected by several control lines and buses. External to the main board are the key panel housed in the expansion module front chassis and the printer motor and print head, both parts of the printer mechanism.

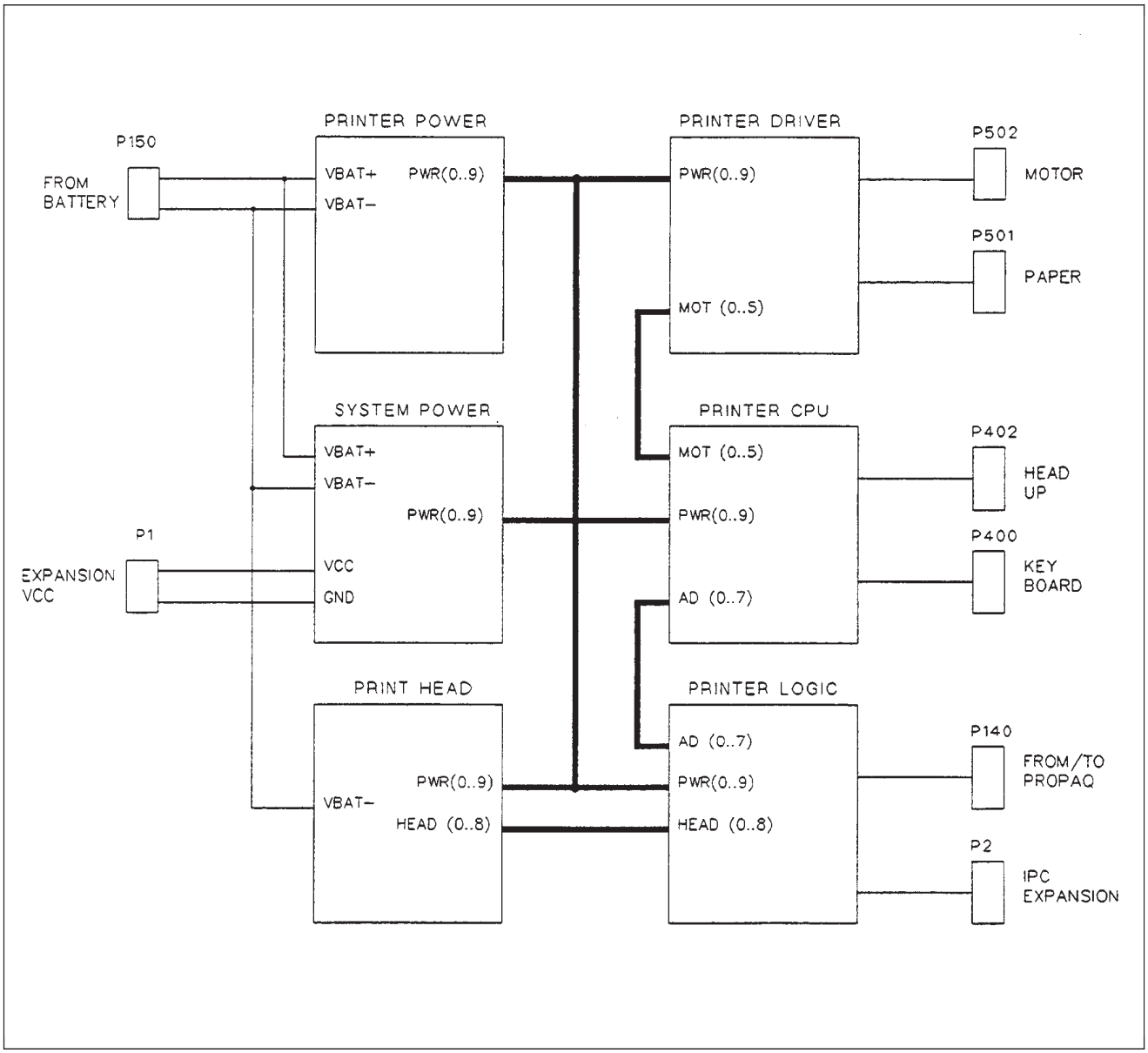

Fig. 6-1. Printer Functional Block Diagram

The Printer CPU block receives data and control information from the Propaq and sends data to circuits that control the functions of the printer.

The Printer Driver controls the motor speed. and monitor the print head temperature, interfaces with the Propaq, and writes print head data (numerics and waveform data) to the print head. The circuits which sense when paper is out

The Printer Logic interfaces with the Propaq and, having been processed by the CPU, writes the print head data to the print head.

The System Power block provides several dc power supplies to the printer.

The Printer Power block provides the +24 V printer power supply.

Pulse Oximetry Option (SpO_2)

System Description

The Propaq pulse oximetry option (SpO_2) hardware includes two circuit boards, a side-panel D connector, and related hardware. The pulse oximetry option is installed either in the pulse oximetry option module attached to the rear of the monitor or in the expansion module when the printer or the CO_2 options are also present.

The two circuit boards include the SpO_2 Communications Processor (SCP Board) and the SpO_2 Board. The SpO_2 Board provides all necessary circuitry to receive and process oxygen saturation data from the NELLCOR oxygen sensor. The SCP Board prepares the data for processing by the monitor's processor, and it handles all communications with the monitor. The SpO_2 Board also sounds (drives) the SpO_2 speaker.

This section gives a detailed circuit description on the pulse oximetry option. For cabling information, see Section 7, *Block Diagrams and Cabling*. See Section 5 for details on opening and closing the expansion module. Details include replaceable module removal/replacement procedures.

Overview

The SpO_2 option hardware consists of the following items:

- monitor/option interface circuit board (SCP board)
- SpO_2 circuit board,
- side-panel connector (9-pin D connector),
- SpO_2 speaker,
- the SpO_2 case attached to the rear of the monitor when no expansion module option (SpO_2 or CO_2) is also present,
- in the case of the printer, the expansion module case attached to the bottom of the monitor.

As shown in Figure 6-2, the SpO_2 signal provided by the oxygen transducer or sensor is first processed by the SpO_2 circuit board where it is converted to digital data, then that data is passed to the SCP board where it is prepared for transmission to the Propaq monitor's main microprocessor. If both pulse oximetry and the printer are installed, the SpO_2 option is installed in the expansion module. If the pulse oximetry alone is installed, an SpO_2 option case is installed onto the rear of the monitor.

With the addition of Propaq options (Pulse Oximetry and/or printer), the single monitor battery was replaced with a dual battery pack containing two identical, lead acid batteries. This battery pack provides all power to the monitor and any added options. An SpO_2 option isolated power supply, powered by monitor batteries, resides on the SCP board, supplying power to the SpO_2 circuits. If the SpO_2 option is part of the expansion module, the SpO_2 power supply does not provide power to the printer in the expansion module. The printer circuit board provides power to the printer.

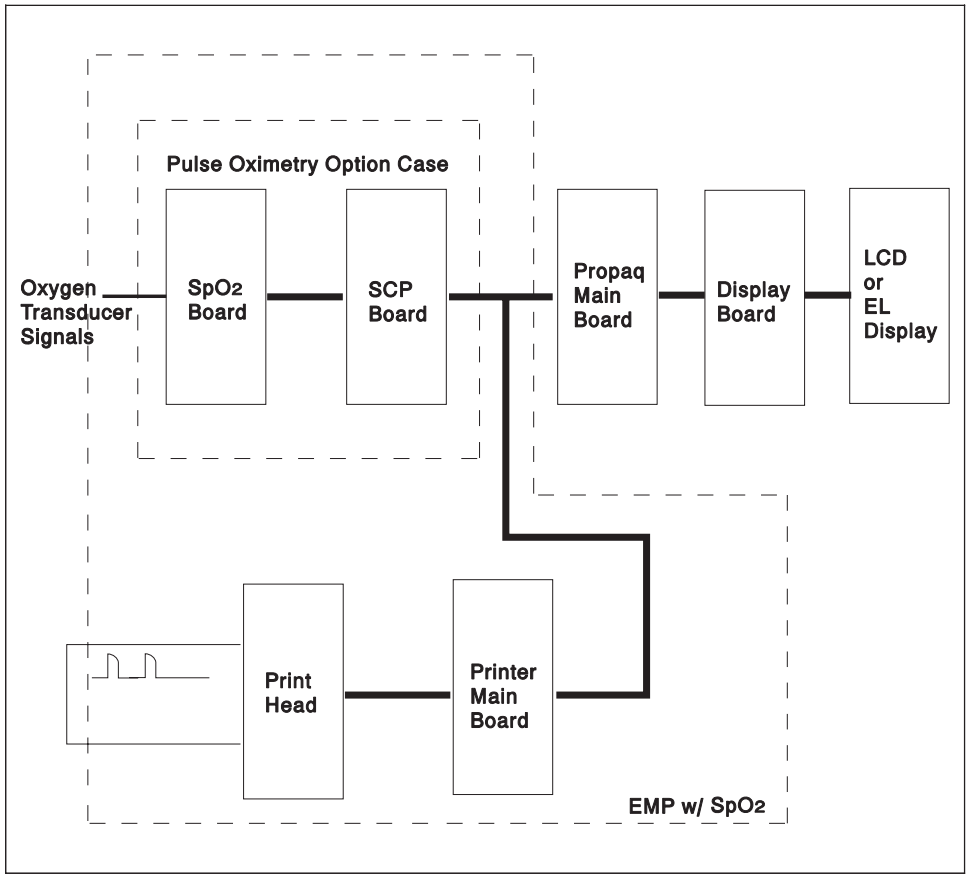

Fig. 6-2. SpO2 System Block Diagram

A connector on the side panel allows connection of an oxygen transducer (to the 9-pin D-type connector) directly to the Propaq. A V-I converter located on the SpO_2 circuit board allows direct connection of the transducer to the Propaq.

Oxygen Transducers

The NELLCOR oxygen transducer (see Figure 6-3) senses oxygen content of functional arteriolar hemoglobin through the use of light passed through the sensor site. The reflective characteristics of hemoglobin at the wavelengths used allow the pulse oximetry circuits to obtain changing saturation levels, which can be processed to obtain the oxygen saturation percentage.

Wavelengths in the red and the infrared regions of light are produced by light emitting diodes (LEDs) manufactured to emit light at the required wavelengths. The reflected light is collected by a photo diode, which converts the light to an electrical signal. The LEDs are switched on and off under control of the SpO_2 microprocessor. Both are not on at the same time (see Figures 6-5 and 6-6 under **Functional Description** for LED timing). As the system receives the signal from the photo diode, it knows whether the signal was derived from the red or infrared LED. Because the photo diode is sensitive to light emitted from sources other than the LEDs (ambient light), an ambient light component must be considered during the processing of the SpO_2 data.

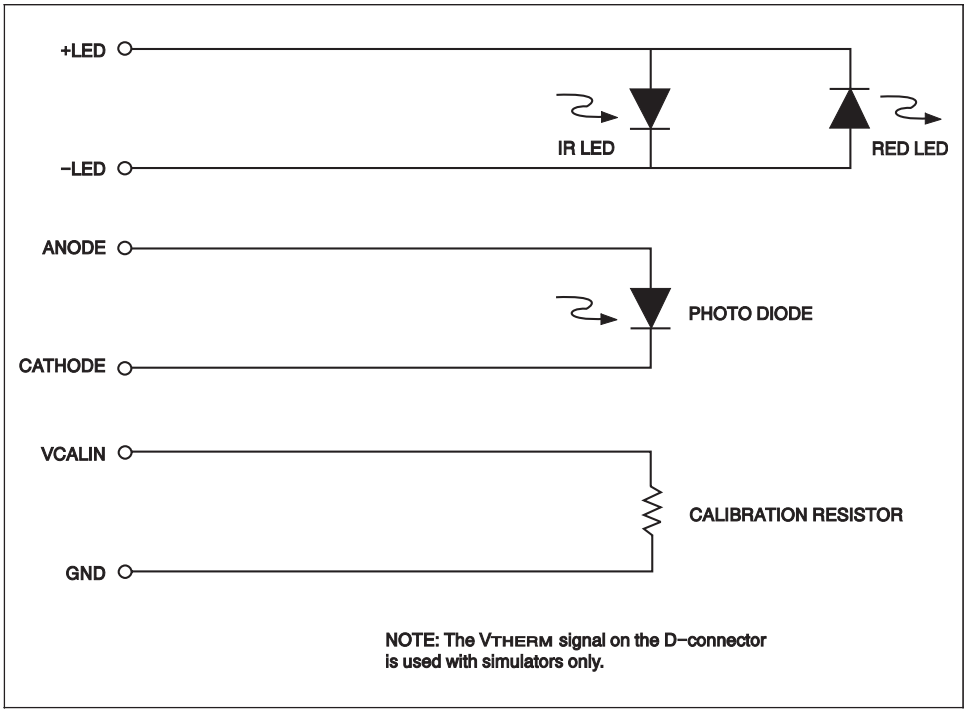

Fig. 6-3. SpO2 Oxygen Transducer (NELLCOR)

An internal calibration resistor in the transducer is used to identify the wavelengths of light produced by the LEDs. This information is required for proper processing of the SpO_2 data.

Functional Description

Figure 6-4 shows a functional block diagram of the SpO_2 circuit board. Refer to Figure 6-4 during the following discussion. The SpO_2 board consists of the following subsystems:

- internal preamplifier and switch
- ac-coupled amplifier
- inverting amplifier with variable gain stage
- synchronous detector
- splitter
- 5-pole low pass filters
- 16-bit ADC
- internal calibration amplifier
- CPU/Control
- LED current drivers
- compare amplifiers

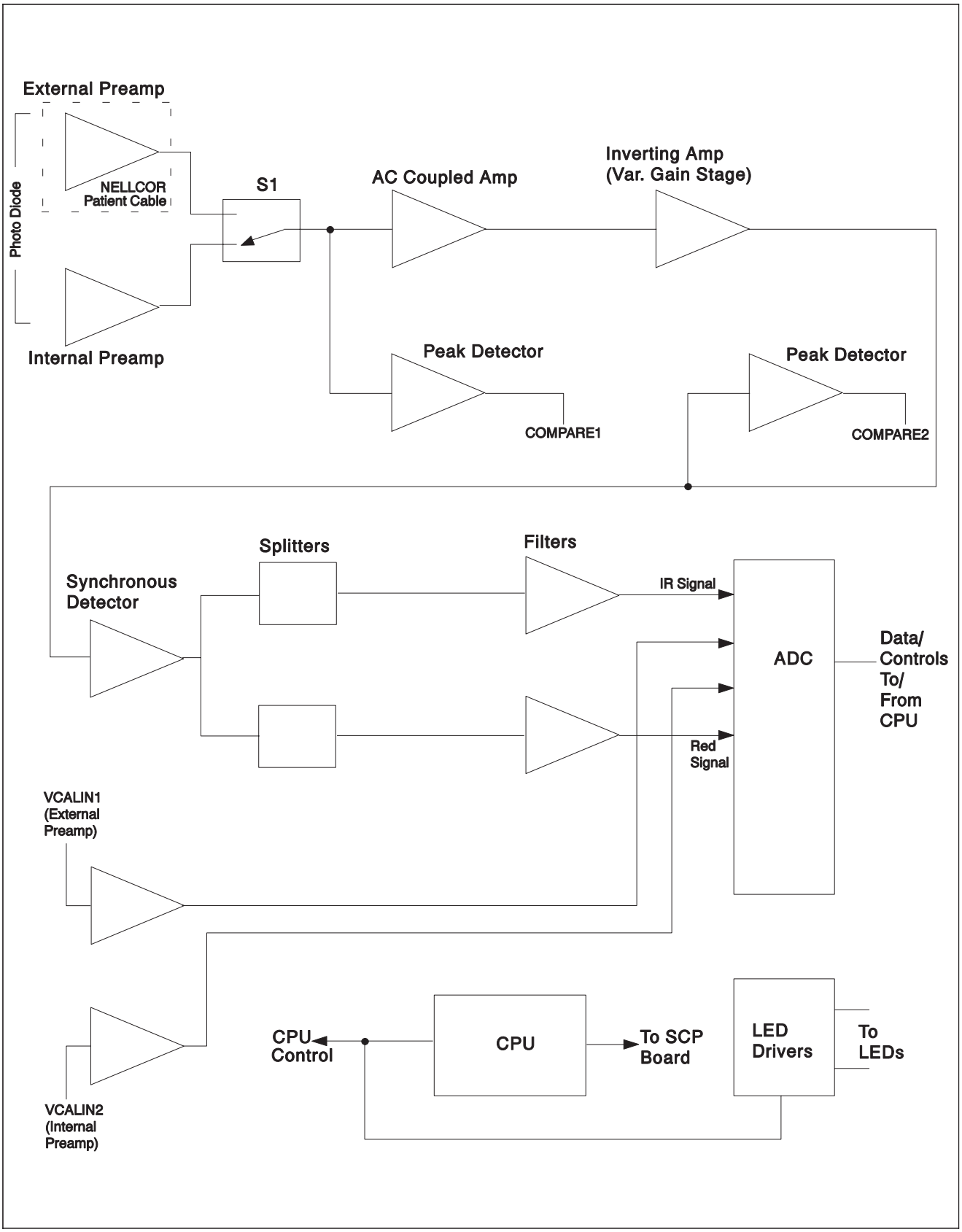

Fig. 6-4. SpO2 Board Functional Block Diagram

Figures 6-5 and 6-6 show timing diagrams for the two MiniSOOM modes: normal run mode, and calibration mode. SpO_2 measurements are made only in normal run mode.

The SpO_2 signal is provided by a transducer directly connected to the D-connector.

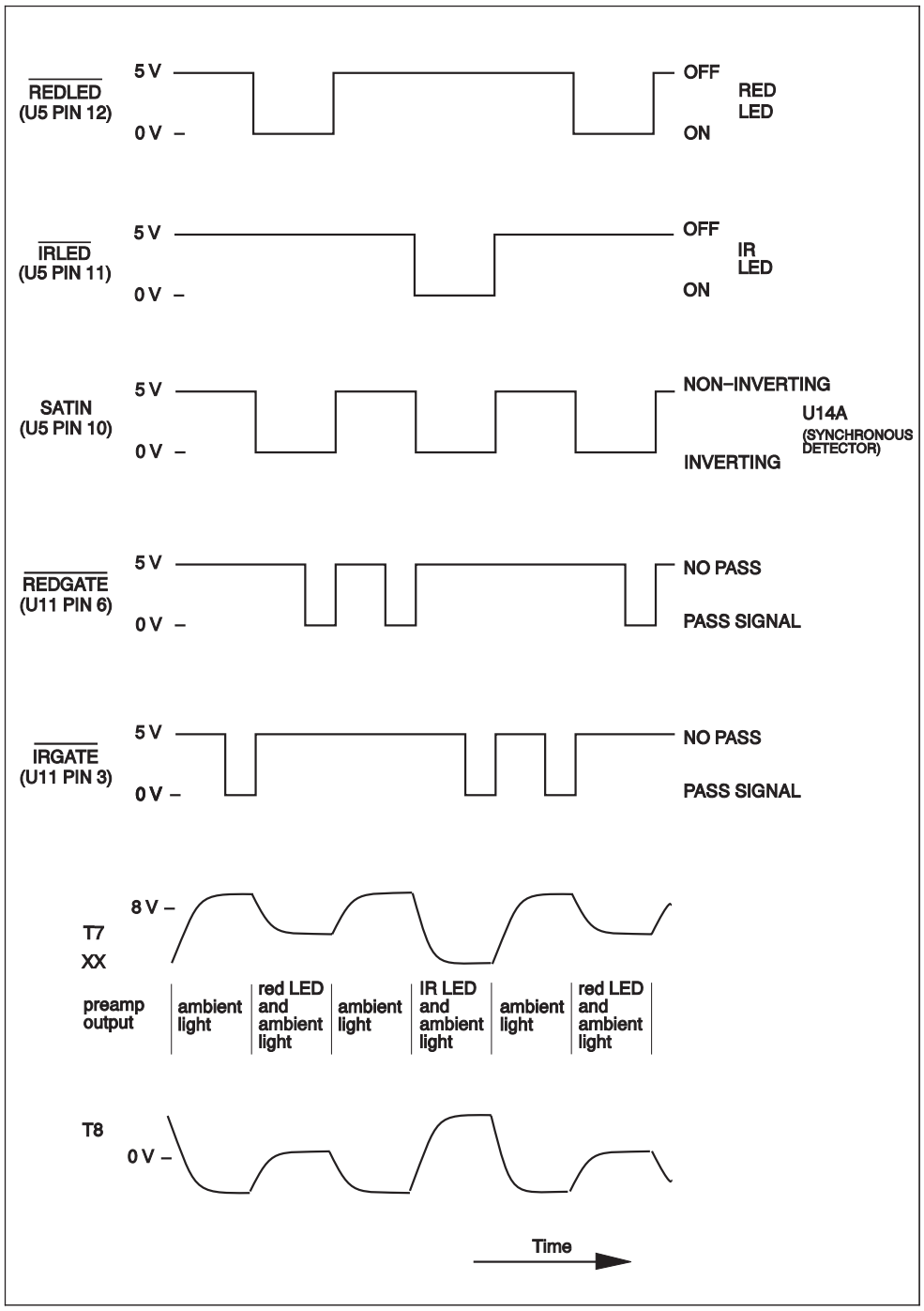

Fig. 6-5. MiniSOOM Timing (Normal Run Mode)

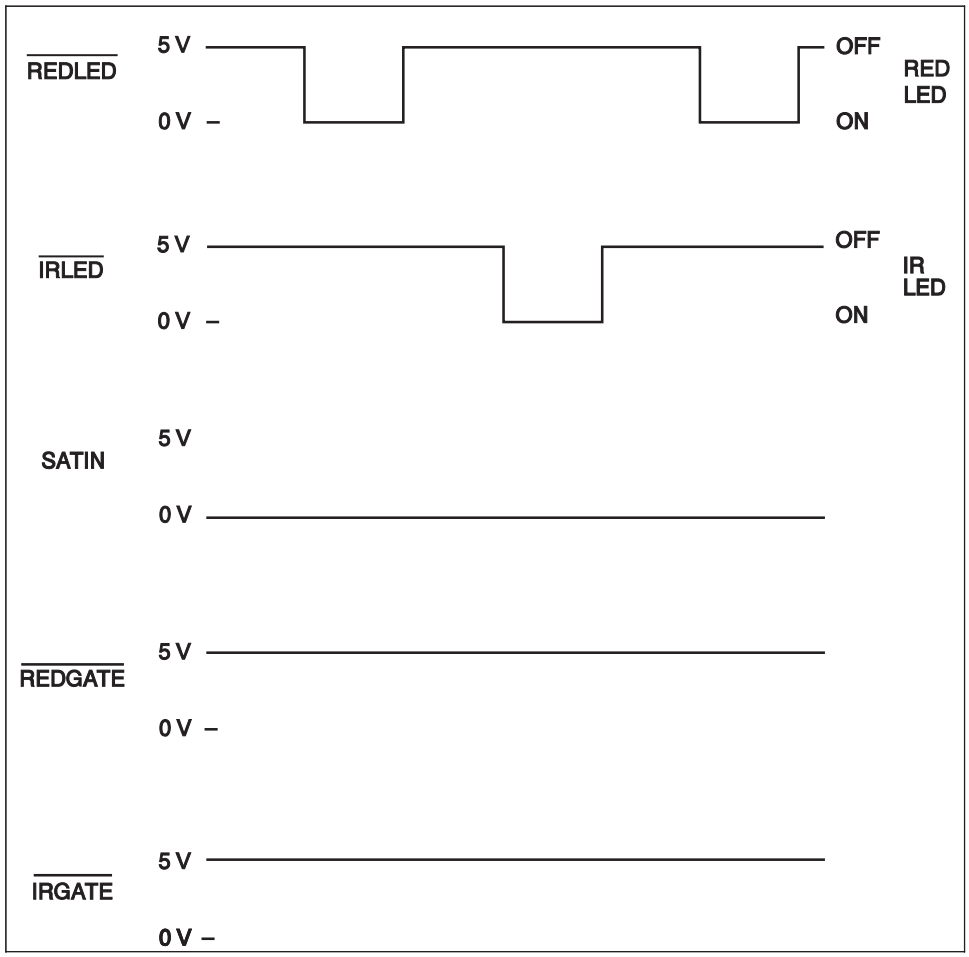

Fig. 6-6. MiniSOOM Timing (Calibration Mode)

NOTE

Earlier versions of the Propaq Pulse Oximetry option included a LEMO connector. A NELLCOR patient cable, including a preamplifier, was plugged into the LEMO connector, which was detected by the VCALIN1 signal. On these earlier versions, the Propaq initiated an equipment alarm if both the D connector and LEMO connector were present.

By monitoring the VCALIN2 signal, the CPU detects the presence of a transducer plugged into the D-type connector. Switch S1 routes the signal from the preamplifier to the ac-coupled amplifier. The input signal is ac-coupled to remove the dc offset present within it. The result is a pulse waveform representing light levels from three sources: red LED, infrared (IR) LED, and ambient. An inverting pre-amplifier with a variable gain stage scales the signal to allow processing the best available pulse oximetry information.

The CPU knows which pulse level of the waveform represents which wavelength of light, because it controls the current to the LEDs. When the red LED is activated, the waveform level indicates red light plus ambient light. When the IR LED is activated, the waveform level indicates IR light plus ambient light. When both LEDs are not activated, the waveform level indicates ambient light. Only the detected red and IR light levels are used to determine the SpO_2 saturation value. The synchronous detector inverts the ambient light signal so that the ambient light signal can be subtracted from either the red plus ambient light signal or the IR plus ambient light signal.

The pulses are filtered through 5-pole filter networks to remove the signal components above about 8 Hz. The resulting signals indicate the detected RED and IR light levels and can then be digitized. The data from the ADC is processed by the CPU and then sent to the SCP board for transmission to the Propaq monitor's CPU.

SpO_2 signal level is controlled through the variable gain stage of the inverting amplifier and the output current of the LED current driver. By controlling both signal gain and current drive, the CPU can maintain the best possible signal level for processing. Amplifiers sense the SpO_2 signal levels at two points, directly sending their outputs to the CPU. The CPU monitors these levels as it sets the gain stages of the inverting amplifier and LED current driver.

Capnography (CO_2) System

System Description

The Propaq Capnography (CO_2) Option includes a CO_2 circuit board, a Nicolay connector and related hardware. The CO_2 circuit board is mounted on the inside back of the expansion module. A portion of the CO_2 circuit board eliminates the need for the SpO_2 option SCP board when that option also is installed.

Overview

The Main Stream circuit board (MSP board) is the major interface connection between several subsystems in the Expansion Module. This circuit board connects directly to the Auxiliary connector, providing a direct interface to a Propaq Display Processor system. The MSP board also supports:

- Main Stream CO_2,
- an interface to the SpO_2 system,
- an interface to the Printer option, and
- an interface to two of the three card slots in the Expansion Module.

Figure 6-7 shows the primary information flow between major blocks within the Propaq monitor system and the Expansion Module Options.

The DAP is the primary Data Acquisition Processor system, resident within the Propaq. The DAP assumes measurement control over the ECG, NIBP, Temperature, and Invasive Blood Pressure patient data channels.

The DCP is the primary Display Control Processor system, resident within the Propaq. The DCP is responsible for the following activities:

- all communication between all other subsystem processors,
- all waveform and numeric data display, and
- all user interfacing (except several buttons on the printer module).

The Propaq Expansion Module contains the MSP subsystem and the Printer Option. External connectors accept SpO_2 and CO_2 external sensors.

The Propaq maintains a patient safety isolation barrier between the DAP and DCP. Likewise, the MSP board has its own internal isolation barrier which separates the non-isolated from the isolated circuitry.

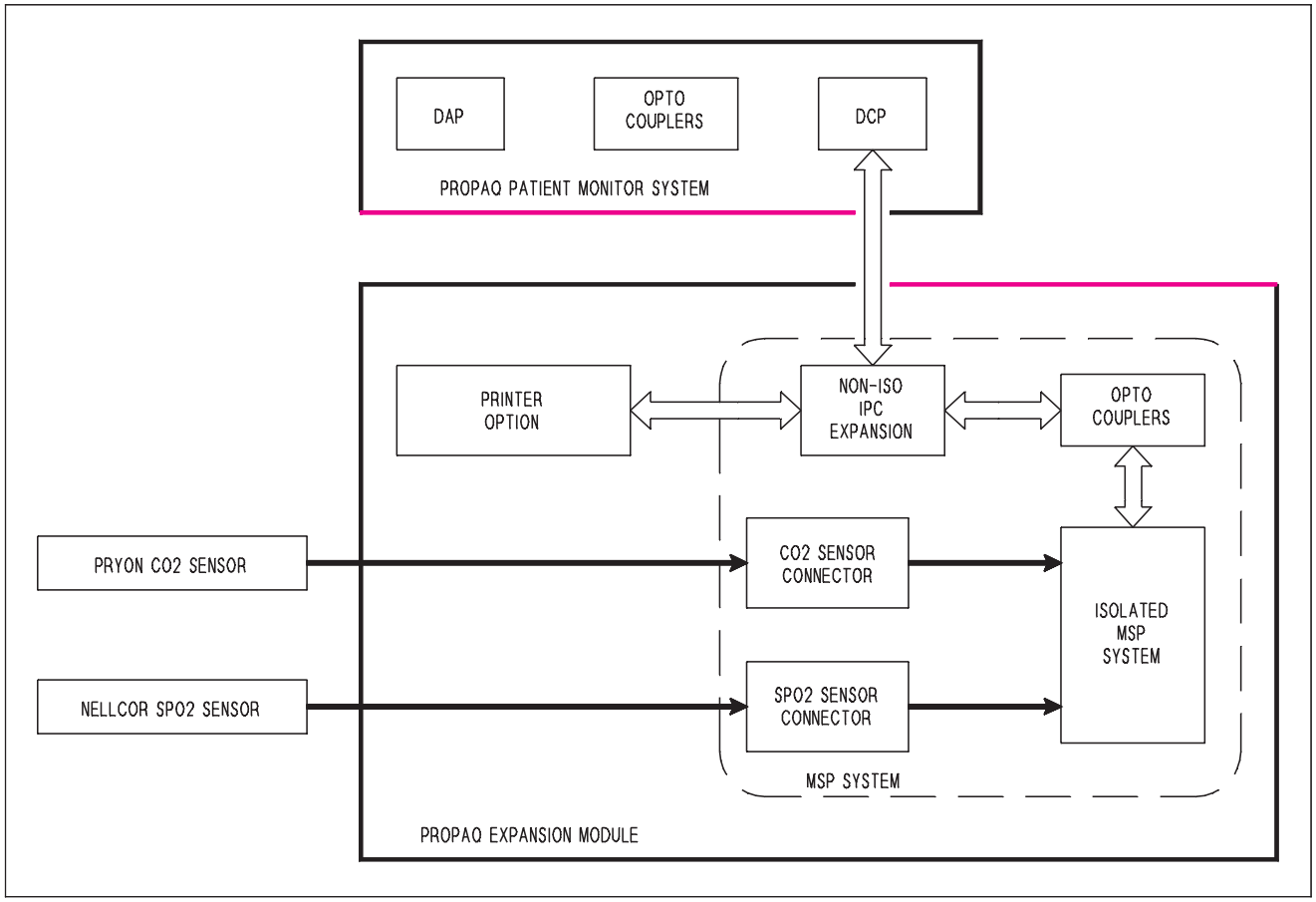

Fig. 6-7. Information Flow Between Expansion Module And Options

Functional Description

The MSP board is divided into isolated and non-isolated circuitry. See Figure 6-8.

Mainstream Board

Non Isolated Circuitry

The Non-Isolated circuitry on the MSP board interfaces with the Propaq, the two undedicated card slots, the printer, the speaker, and with the Main Stream Processor which resides on the isolated section of the MSP board.

Isolated Circuitry

The Isolated Circuitry contains a Signetics 552 embedded controller which directly controls the hardware responsible for the CO_2 measurement function.

A UART directly interfaces with the Nellcor Mini-Soom board providing the SpO_2 measurement function.

The CO_2 and SpO_2 functions are isolated from all other subsystems in the Propaq or Expansion modules, but not from each other.

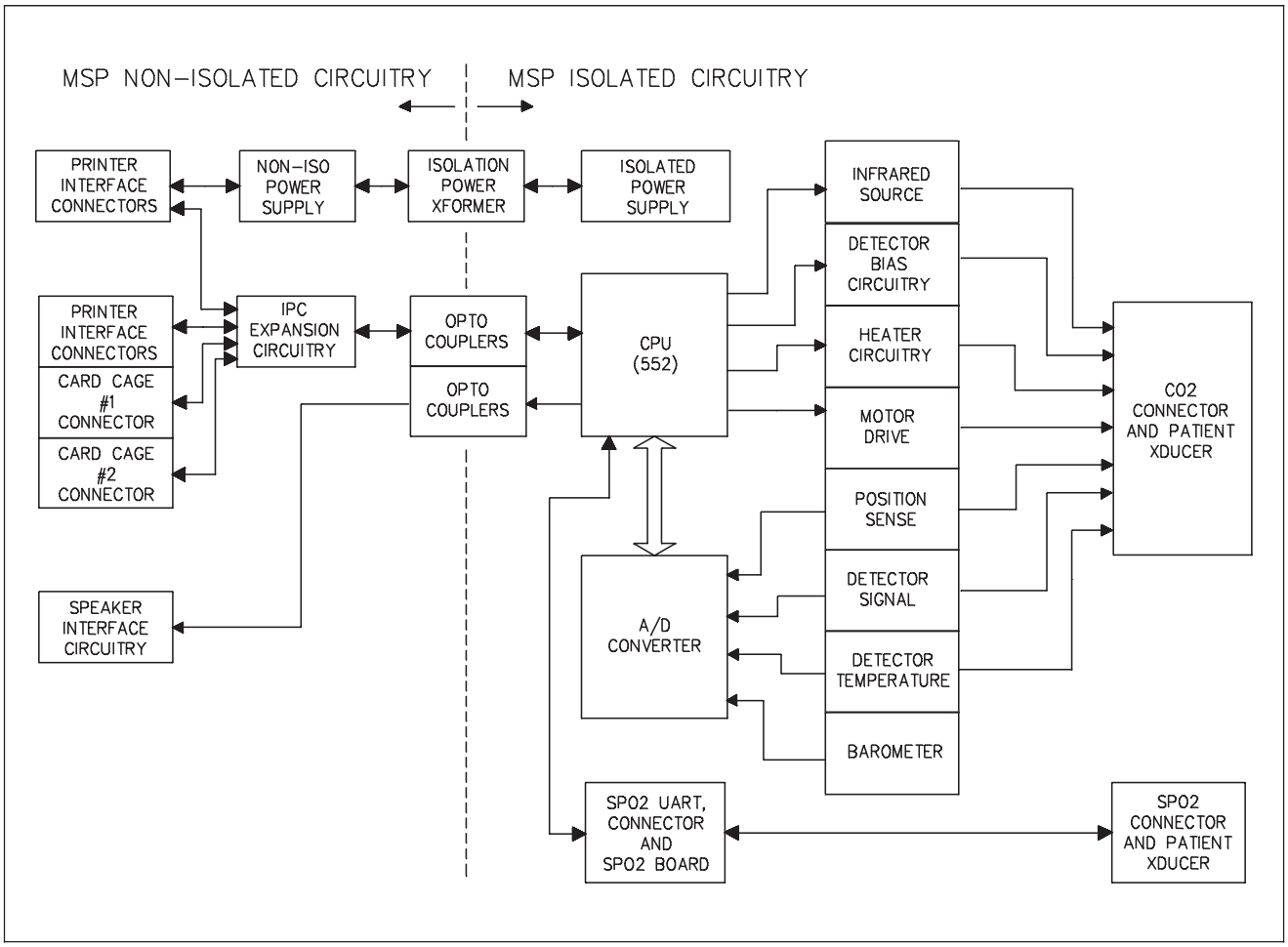

Fig. 6-8. Capnography Functional Block Diagram

IPC Expansion

The IPC bus, originating in the Propaq, is passed to the MSP board from the Auxiliary connector. The two-wire bus is expanded to each card cage, the printer, and to the Main Stream Processor via optocouplers.

Power Distribution System

Power for all circuit operations is derived solely from the Auxiliary Expansion Connector. The principal supply comes from the Propaq battery connections. This source of power supplies an LT1170 and power transformer, T1, which in turn supplies power for all circuit functions on the MSP board.

Mainstream CO_2 Sensor

The Propaq monitor performs CO_2 monitoring using infrared (IR) measurements obtained from a mainstream CO_2 sensor. The sensor is incorporated into the airway close to the patient's mouth, usually between the endotracheal tube and the gas-delivey apparatus.

The CO_2 sensor consists of a light source and filter, a revolving chopper wheel, and a photodetector. See Figure 6-9A.

The chopper wheel contains a sealed CO_2 reference cell and an open slot, arranged in a flat, circular, aluminum base. See Figure 6-9B.

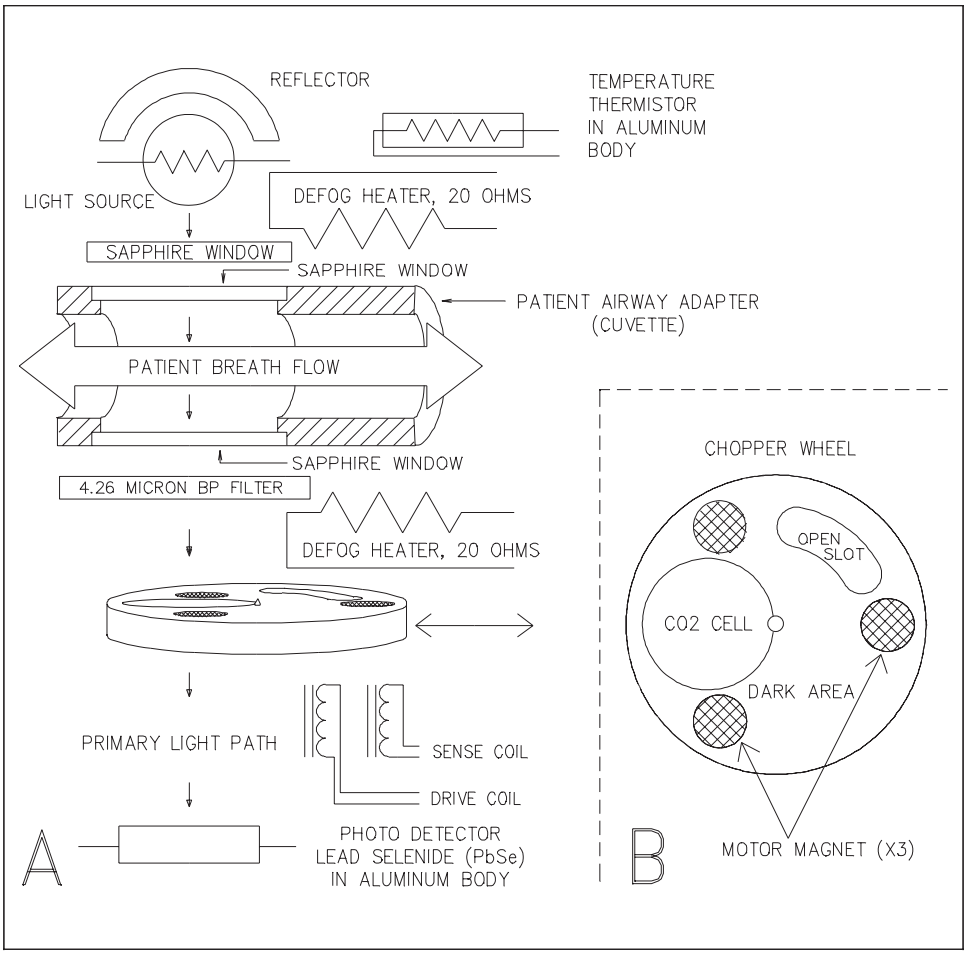

Fig. 6-9. CO2 Sensor Components

The sensor mounts over and connects to a disposable airway adapter through which the patient's gases flow.

An IR beam at one end of the sensor is projected through the patient's airway gases to a photodetector at the other end of the sensor. On its way to the photodector through the airway gases, the IR beam also passes through either the open slot or the sealed CO_2 reference cell on the chopper wheel.

The chopper wheel revolves every 30 milliseconds, generating two absorption-level measurements: 1) when the light passes through the opening as well as the airway gas, and 2) when the light passes through the sealed CO_2 cell as well as the airway gas.

The photodetector transforms these two measurements into numerical values which the Propaq system uses to calculate CO_2 concentration in each exhaled breath. The result is translated into voltage and sent to the real-time graphical display, where it is shown as an analog waveform.

The Propaq capnography system displays graphical detail for a range of CO_2 measurements: CO_2 waveform and end-tidal CO_2, inspired CO_2, and breath-rate numerics.

The system compensates for the presence of varying and unpredictable contaminants such as moisture or mucus by using a ratiometric technique. The system also compensates automatically for changes in barometric pressure. Warm-up time is less than 20 seconds, and sensor temperature is maintained at a level sufficient to reduce condensation.

Section 7

Diagrams

This *Calibration/Maintenance Manual* contains block diagrams, selected assembly drawings related to replacement procedures, and cabling for the Propaq 100-Series monitors, Printer, SpO_2, and CO_2 options. See the *Schematics & Drawings Set* for assembly drawings, detailed circuit descriptions, bills of materials, and electrical schematics.

For a list of replaceable kits and parts related to these diagrams, see Section 8, *Replaceable Parts*. The following table lists cabling diagrams and block diagrams as they are ordered in this section.

List Of Cabling, Block, and Assembly Diagrams		
Title	**Drwg #**	**# Sheets**
Cabling Diagrams		
EL Monitor Cable Location Diagram	Fig. 7-1	N/A
LCD Monitor Cable Location Diagram	Fig. 7-2	N/A
Main Board to Recharger Board Cable	Fig. 7-3	N/A
AAMI ECG to Main Board Cable	Fig. 7-4	N/A
HP ECG to Main Board Cable	Fig. 7-5	N/A
6-Pin P1/P2 to Main Board Cable	Fig. 7-6	N/A
HP P1/P2 to Main Board Cable	Fig. 7-7	N/A
T1/T2 to Main Board Cable	Fig. 7-8	N/A
Analog and Speaker Output to Main Board Cable	Fig. 7-9	N/A
RS423 to Main Board Cable	Fig. 7-10	N/A
Recharger Board to Battery Cable/Expansion Connector	Fig. 7-11	N/A
Battery Compartment Temperature Sensor Cable	Fig. 7-12	N/A
External Power Connector to Recharger Board Cable	Fig. 7-13	N/A
Expansion Connector Cable	Fig. 7-14	N/A
EL Backlight Panel to Recharger Bd Cable	Fig. 7-15	N/A
LED to Main Board Cable	Fig. 7-16	N/A
LEDs and Switch to Recharger Board Cable	Fig. 7-17	N/A
SpO_2 Speaker Cable	Fig. 7-18	N/A
Pump Cable	Fig. 7-19	N/A
SCP Board to Rear Chassis Expansion Conn. Cable	Fig. 7-20	N/A
Expansion Module Battery to Printer Cable	Fig. 7-21	N/A
SCP Board to Printer Main Board Cable	Fig. 7-22	N/A

List Of Cabling, Block, and Assembly Diagrams		
Title	**Drwg #**	**# Sheets**
Printer Main Board to Key Board Cable	Fig. 7-23	N/A
Printer Main Board to Rear Chassis Expansion Connector Cable	Fig. 7-24	N/A
SOOM Board to Sub D Oximeter Sensor Cable	Fig. 7-25	N/A
Main Board to LCD Recharger Board Cable	Fig. 7-26	N/A
BLOCK DIAGRAMS		
System Level Block Diagram	Fig. 7-27	1
Isolated Patient Circuits Block Diagram	Fig. 7-28	1
Non-Isolated Circuits Block Diagram	Fig. 7-29	1
Displays Block Diagram	Fig. 7-30	1
EL Recharger and Power Supplies/Distribution Block Diagram	Fig. 7-31	1
LCD Recharger Block Diagram	Fig. 7-32	1
ASSEMBLY DIAGRAMS		
SpO_2 for Propaq, 824-0204-xx, sheet 1 of 2	Fig. 7-33	1
SpO_2 for Propaq, 824-0204-xx, sheet 2 of 2	Fig. 7-34	1
EL Display Panel, 824-0208-xx, sheet 2 of 9	Fig. 7-35	1
LCD Display Panel, 824-0208-xx, sheet 3 of 9	Fig. 7-36	1
SpO_2/CO_2 Option W/Printer, 824-0208-xx, sheet 4 of 9	Fig. 7-37	1
SpO_2/CO_2 Option Without Printer, 824-0208-xx, sheet 5 of 9	Fig. 7-38	1
SpO_2 Option W/Printer, 824-0208-xx, sheet 6 of 9	Fig. 7-39	1
SpO_2/CO_2 Option W/Printer, 824-0208-xx, sheet 7 of 9	Fig. 7-40	1
Printerless SpO_2/CO_2 Option, 824-0208-xx, sheet 8 of 9	Fig. 7-41	1
Main Board EL PCB 2nd Level Details, 824-0211-01, sheet 4 of 4	Fig. 7-42	1
Main Board LCD PCB 2nd Level Details, 824-0218-00, sheet 4 of 4	Fig. 7-43	1
EL Front Panel, 824-0226-00, sheet 1 of 2	Fig. 7-44	1
EL Front Panel, 824-0226-00, sheet 2 of 2	Fig. 7-45	1
Rear Chassis, 824-0230-00, sheet 3 of 5	Fig. 7-46	1
Rear Chassis, 824-0230-00, sheet 4 of 5	Fig. 7-47	1
Rear Chassis, 824-0230-00, sheet 5 of 5	Fig. 7-48	1
LCD Front Panel, 824-0277-00	Fig. 7-49	1
LCD Front Panel, 824-0277-00	Fig. 7-50	1
LCD Front Panel, 824-0277-00	Fig. 7-51	1

Table 7-1. Location of Cables and Connectors (EL Display)

No.	Description or From Location	To Connector	On Board
1	Temperature (T1 and T2)	P8	Main
2	IBP Connector (P1 and P2)	P7	Main
3	ECG Connector	P6	Main
4	Battery Compartment Temperature Sensors	P1	Recharger
5	Battery and Expansion Connector	P4	Recharger
6	Power Switch and LED (Right Side Panel)	P2	Recharger
7	Dc Input Connector	P3	Recharger
8	Communications Connector	P3	Main
9	Analog Output and Speaker Connector	P5	Main
10	Expansion Connector	P4	Main
11	From Display Interconnect Board	P6	Recharger
12	Alarm LEDs	P9	Main
13	Connector P5 on Recharger Board	P1	Main
14	Pump Power Cable	P7	Recharger

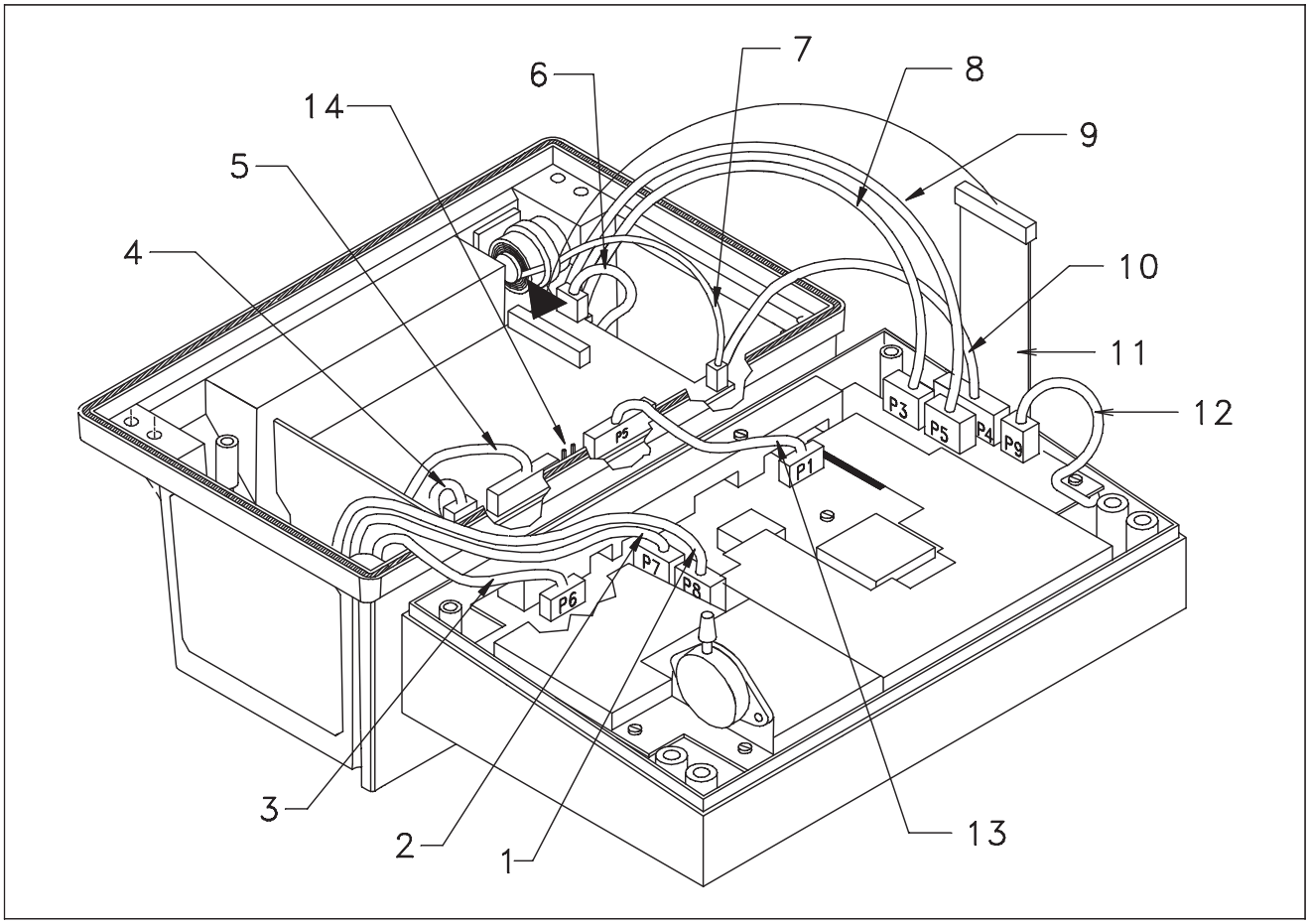

Fig. 7-1. Cable Location Diagram (EL Display)

Table 7-2. Location of Cables and Connectors (LCD Display)

No.	Description or From Location	To Connector	On Board
1	Temperature (T1 and T2)	P8	Main
2	IBP Connector (P1 and P2)	P7	Main
3	ECG Connector	P6	Main
4	Battery Compartment Temperature Sensors	P1	Recharger
5	Battery and Expansion Connector	P4	Recharger
6	Power Switch and LED (Right Side Panel)	P2	Recharger
7	Dc Input Connector	P3	Recharger
8	Communications Connector	P3	Main
9	Analog Output and Speaker Connector	P5	Main
10	Expansion Connector	P4	Main
11	From Main Board Vcc and Shutdown\[a]	P6 (subset)	Recharger
12	Alarm LEDs	P9	Main
13	Connector P5 on Recharger Board	P1	Main
14	Pump Power Cable	P7	Recharger
15	From LCD Backlight	P8	Recharger

[a] Soldered to P2 Pin 2 & and P11 pin 1 for Main board schematic 800-0023-00
Plugged into P12 for Main board schematic 800-0023-01.

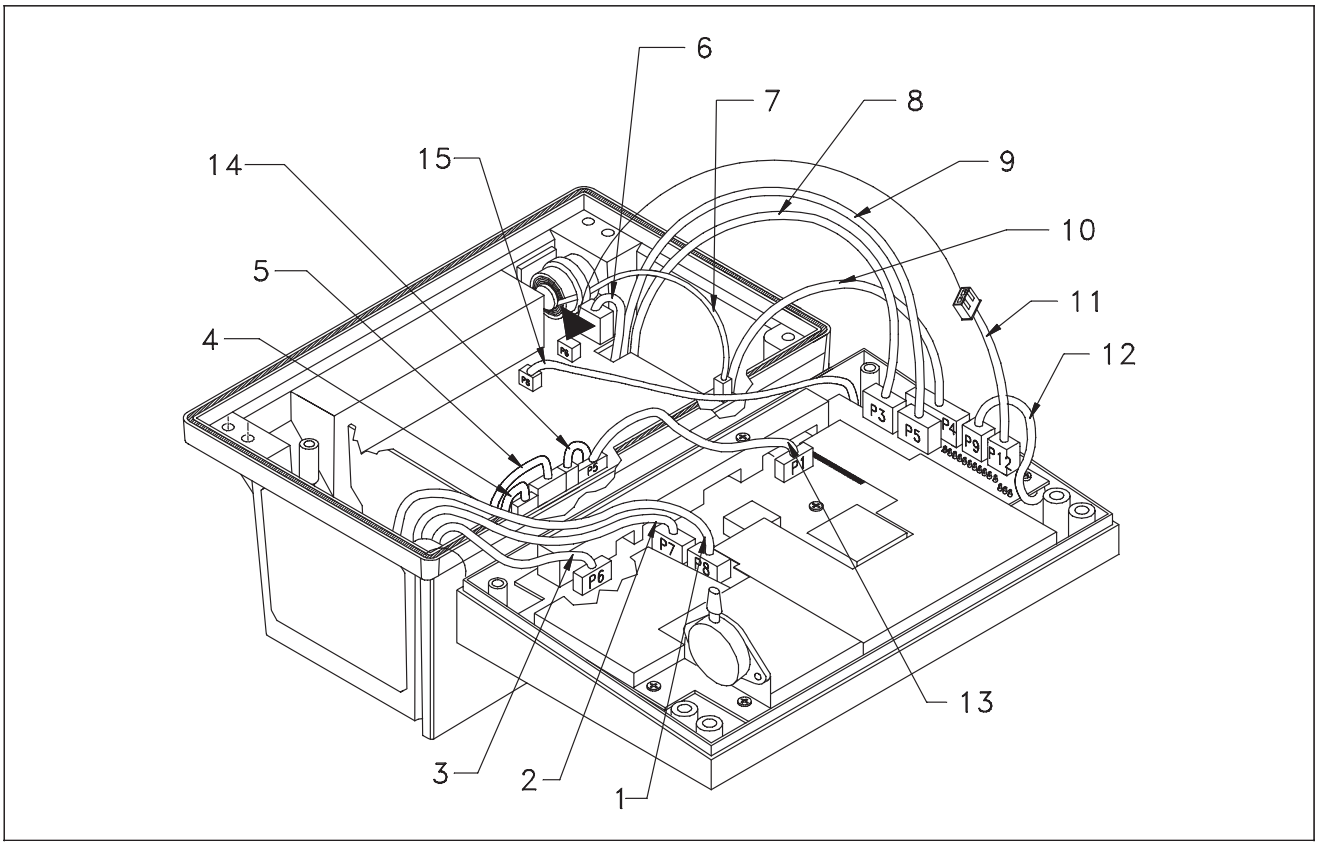

Fig. 7-2. Cable Location Diagram (LCD Display)

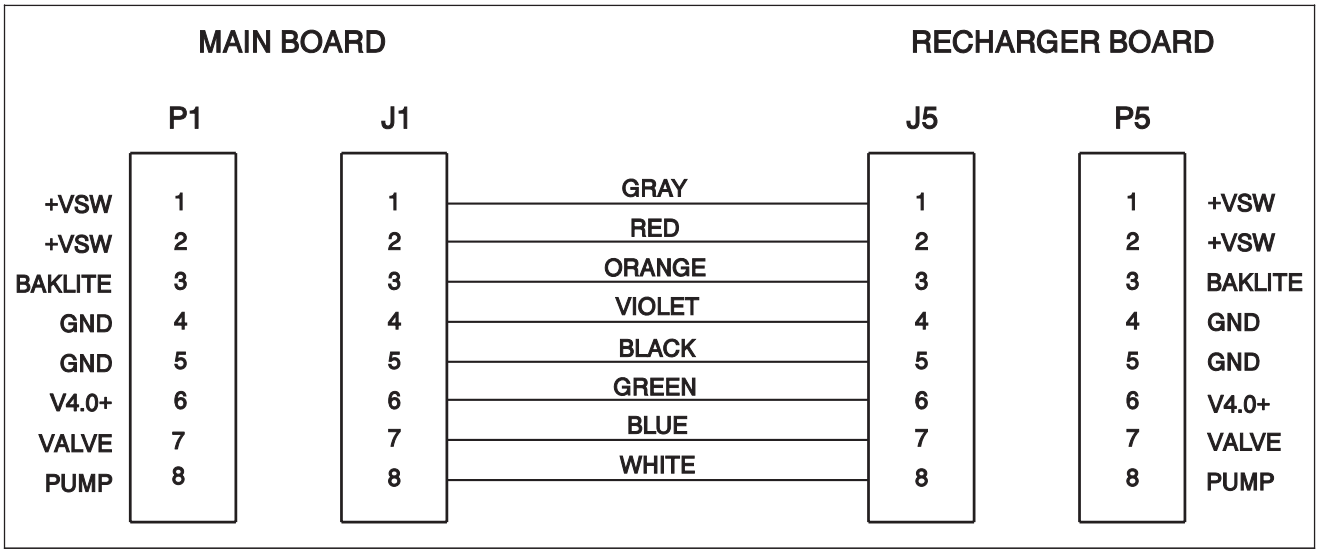

Fig. 7-3. Main Board to Recharger Board Cable

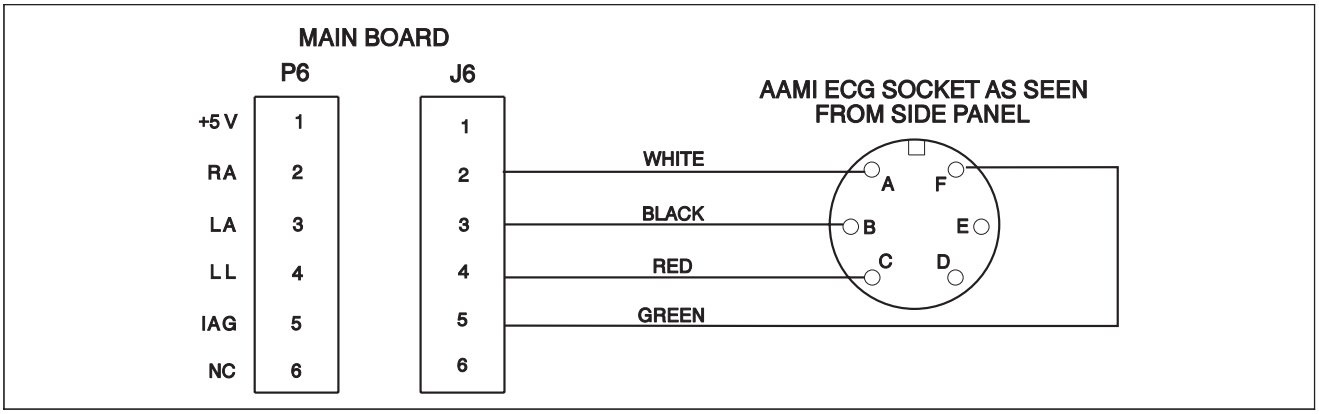

Fig. 7-4. AAMI ECG to Main Board Cable

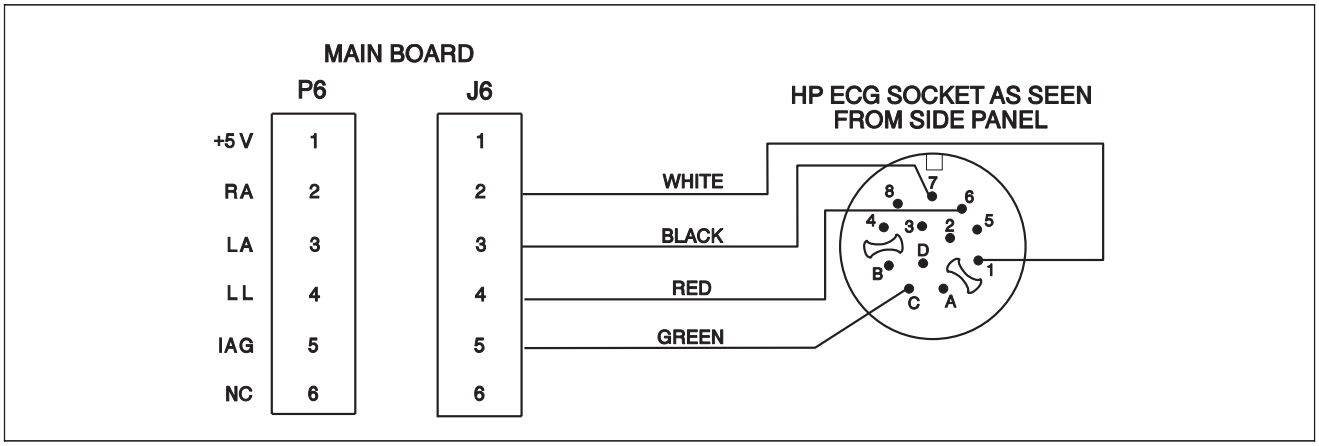

Fig. 7-5. HP ECG to Main Board Cable

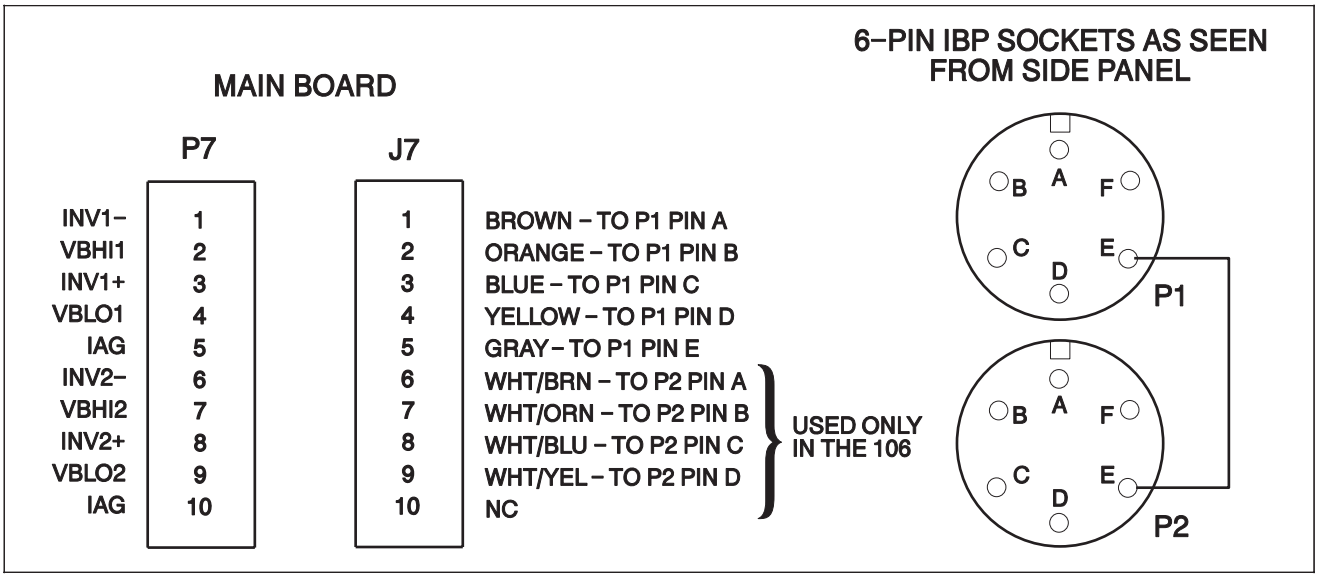

Fig. 7-6. 6-Pin P1/P2 to Main Board Cable

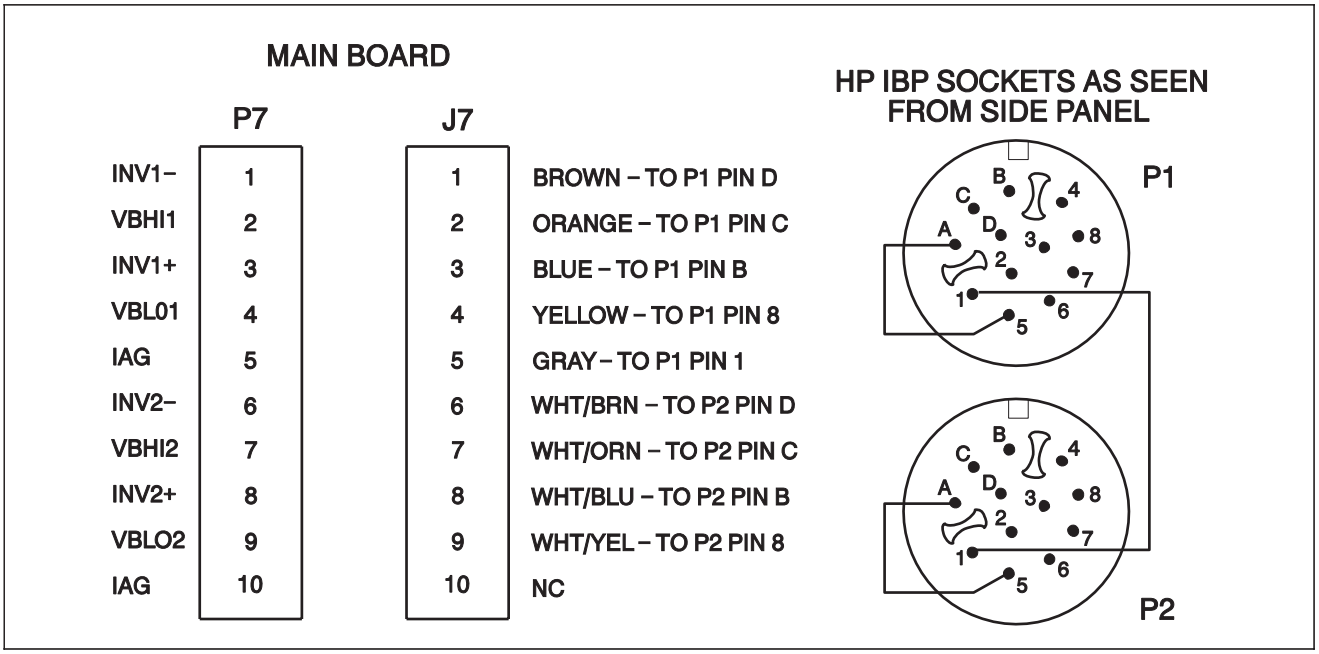

Fig. 7-7. HP P1/P2 to Main Board Cable

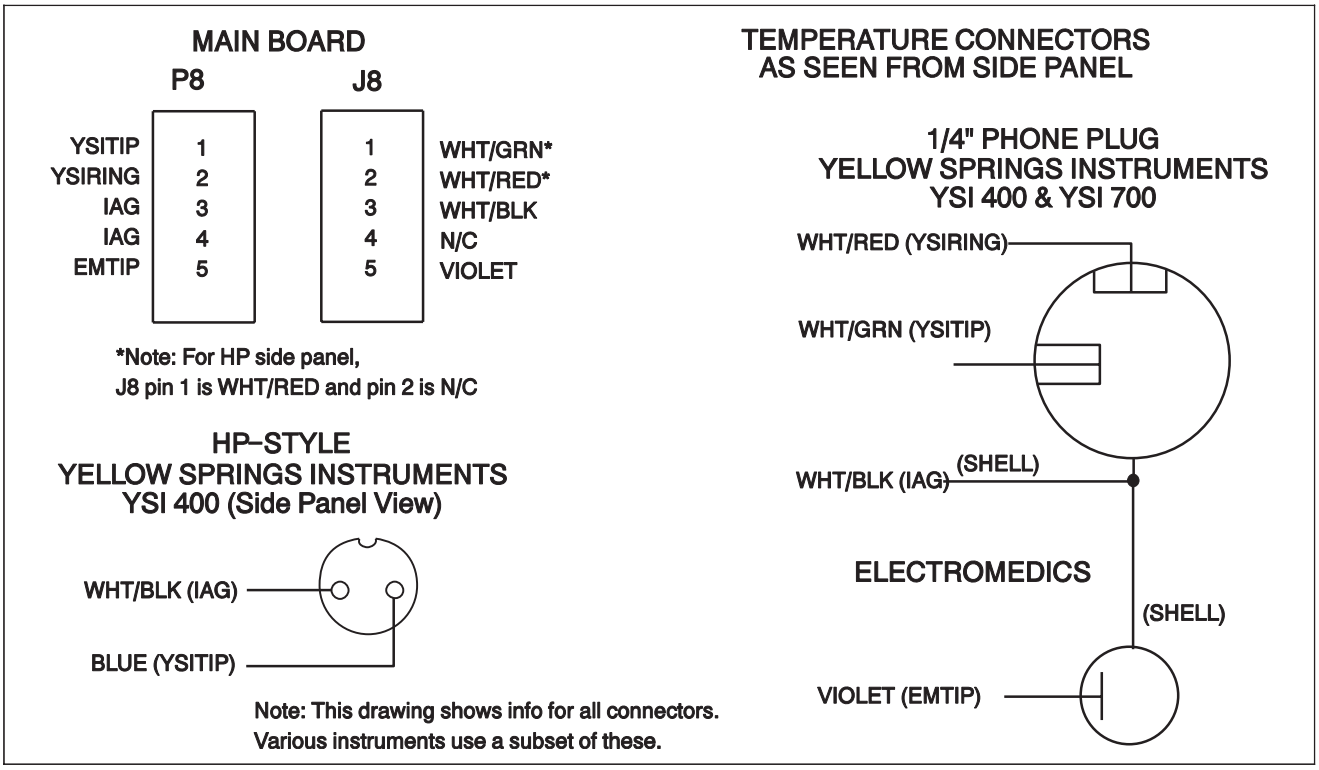

Fig. 7-8. T1/T2 to Main Board Cable

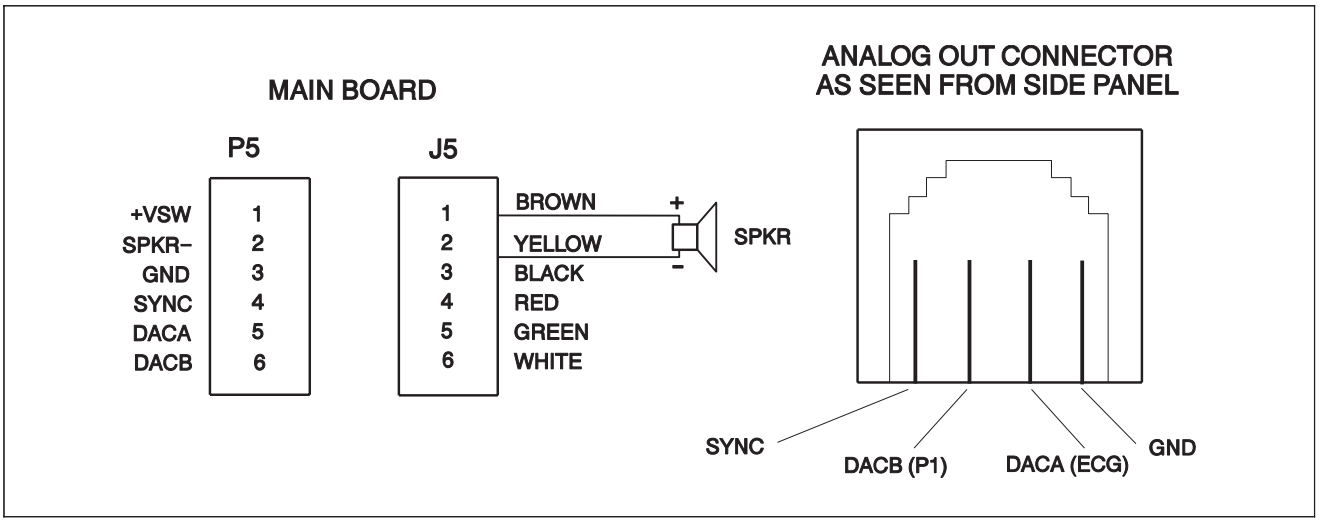

Fig. 7-9. Analog and Speaker Output to Main Board Cable

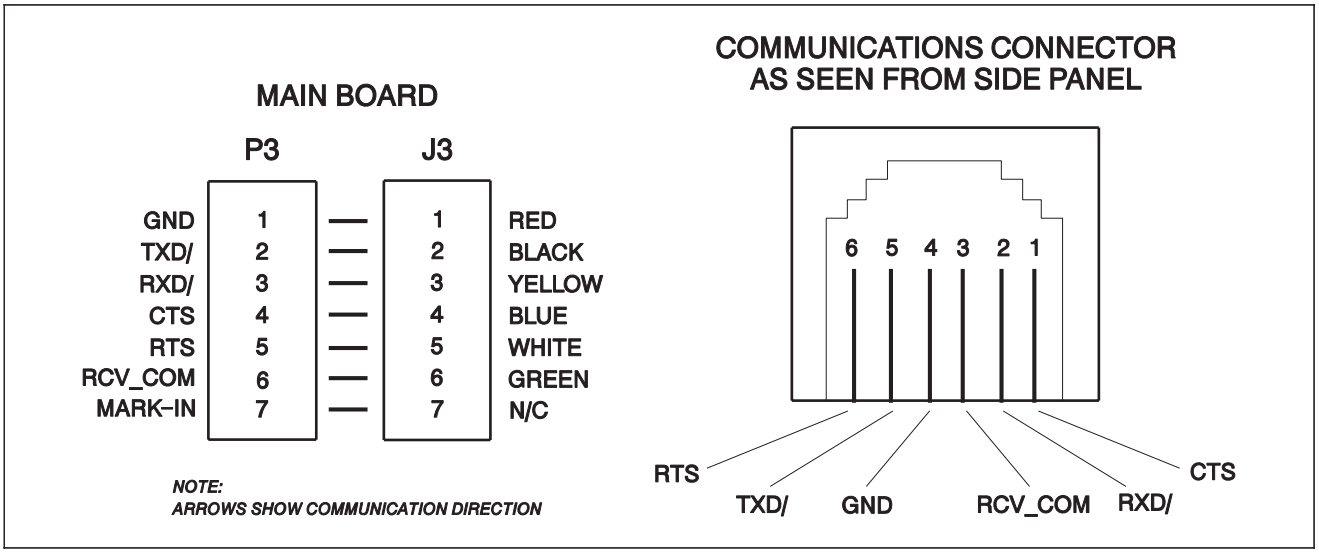

Fig. 7-10. RS423 to Main Board Cable

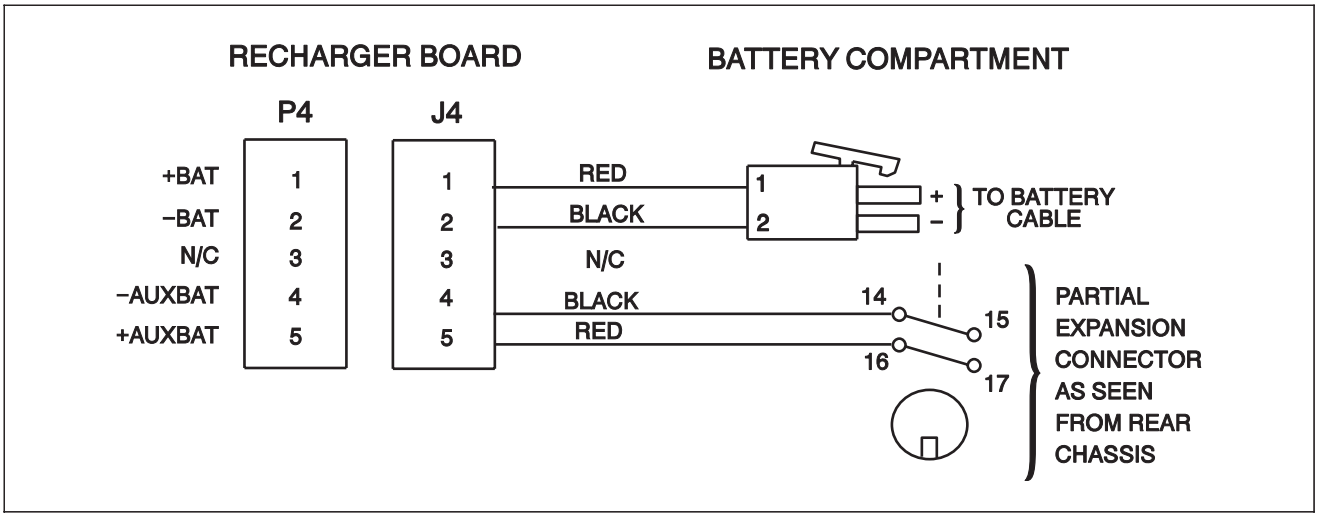

Fig. 7-11. Recharger Board to Battery Cable/ Expansion Connector

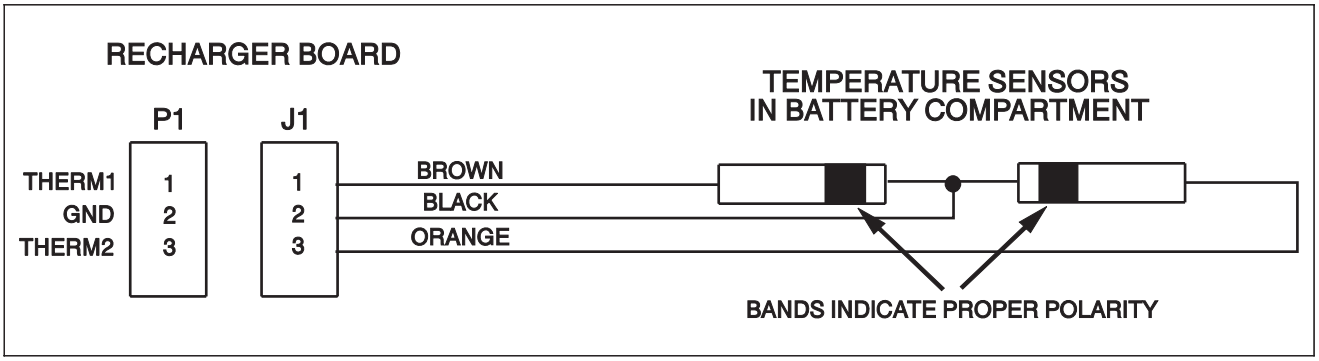

Fig. 7-12. Battery Compartment Temperature Sensor Cable

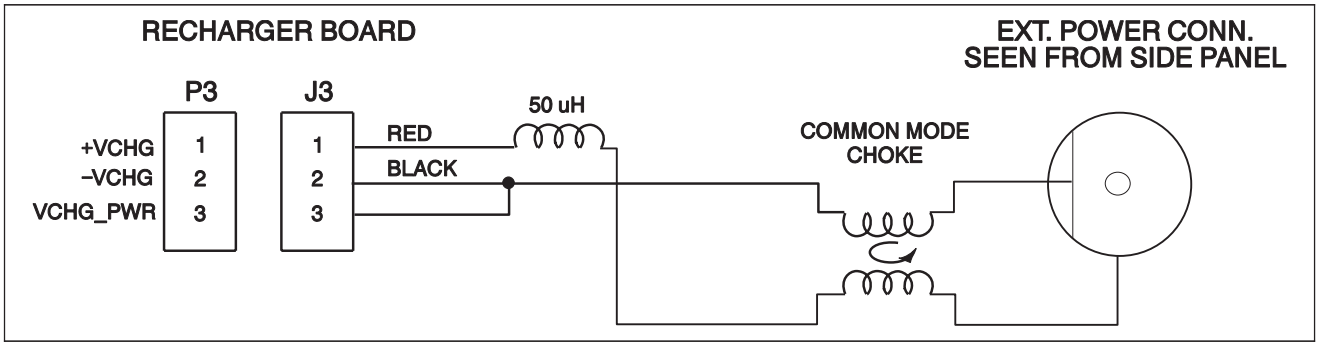

Fig. 7-13. External Power Connector to Recharger Board Cable

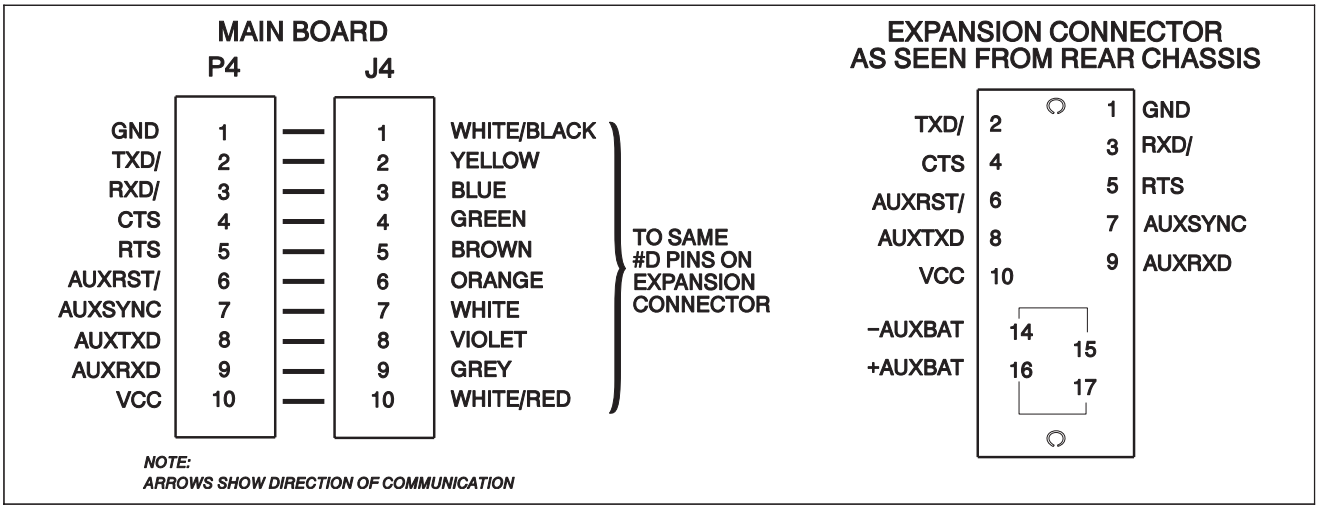

Fig. 7-14. Expansion Connector Cable

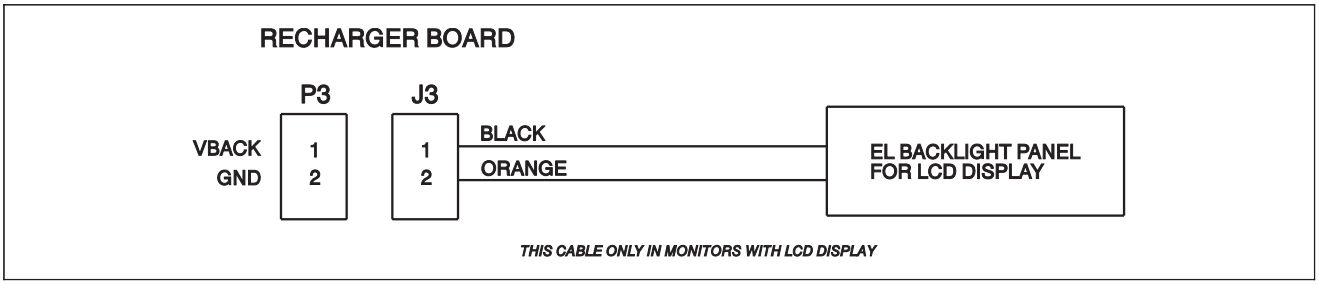

Fig. 7-15. EL Backlight panel to Recharger Bd Cable

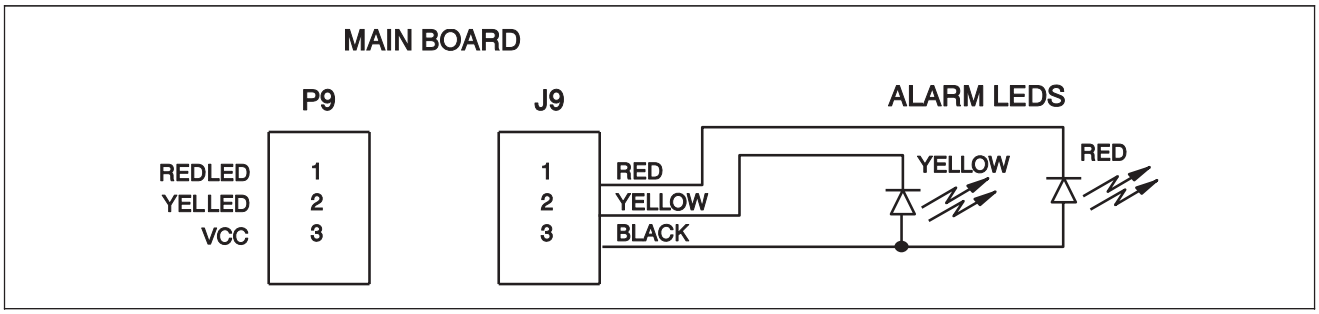

Fig. 7-16. LED to Main Board Cable

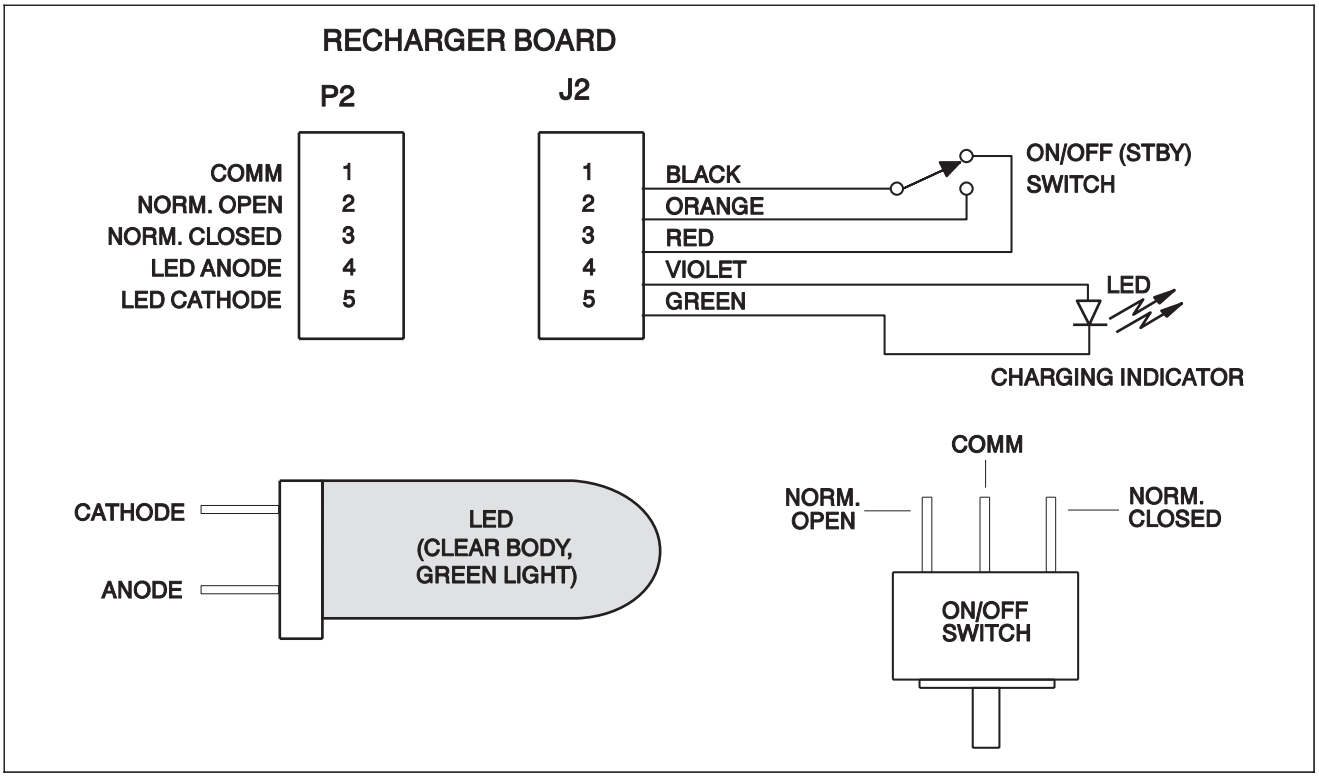

Fig. 7-17. LEDs and Switch to Recharger Board Cable

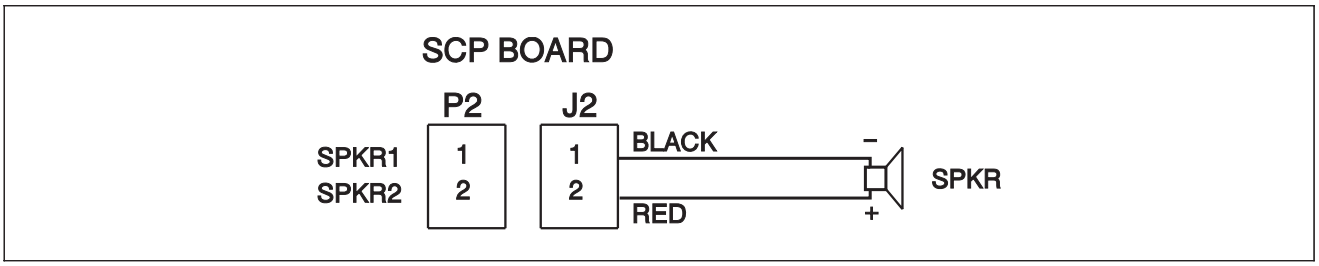

Fig. 7-18. SpO2 Speaker Cables

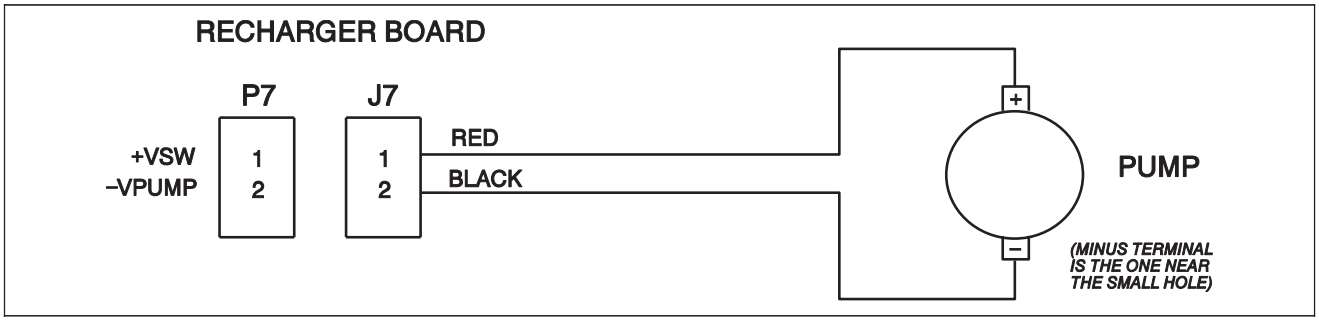

Fig. 7-19. Pump Cable

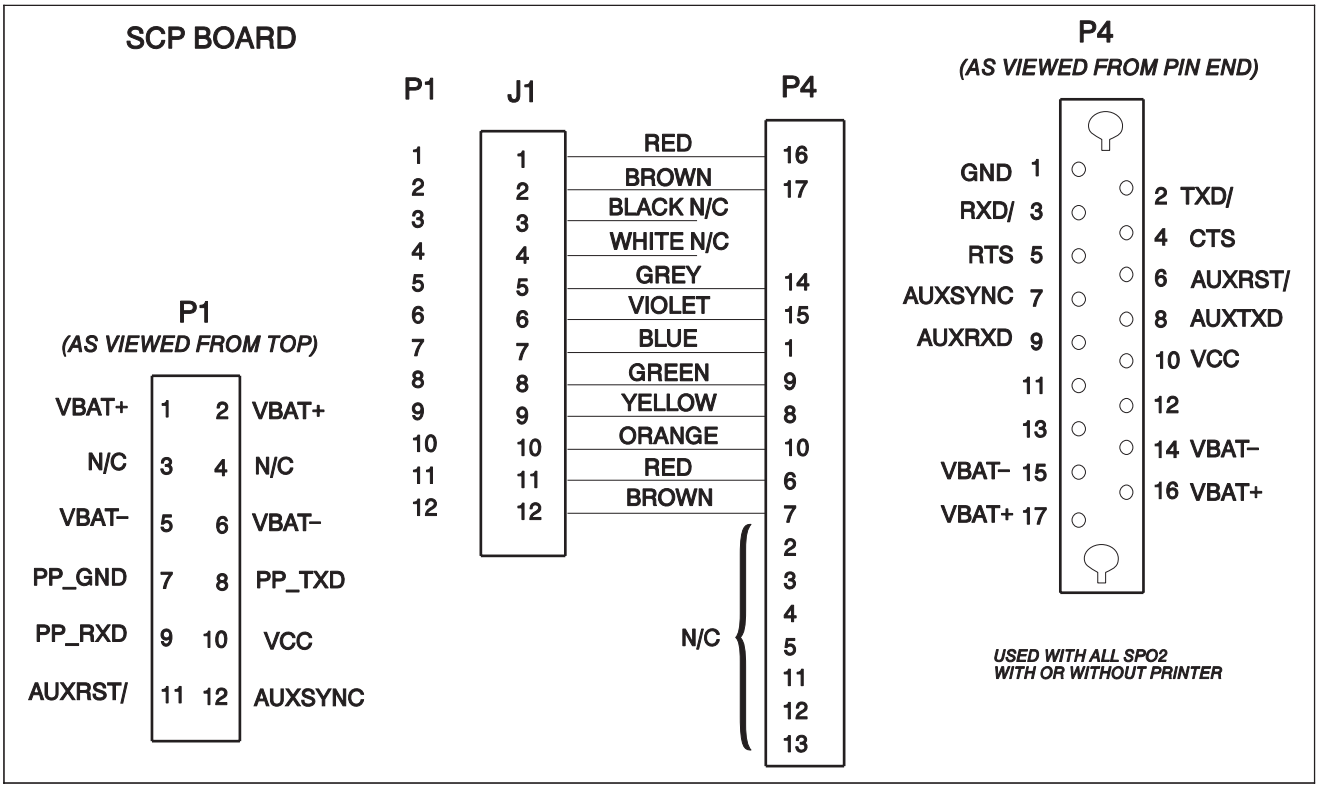

Fig. 7-20. SCP Board to Rear Chassis Expansion Connector Cable

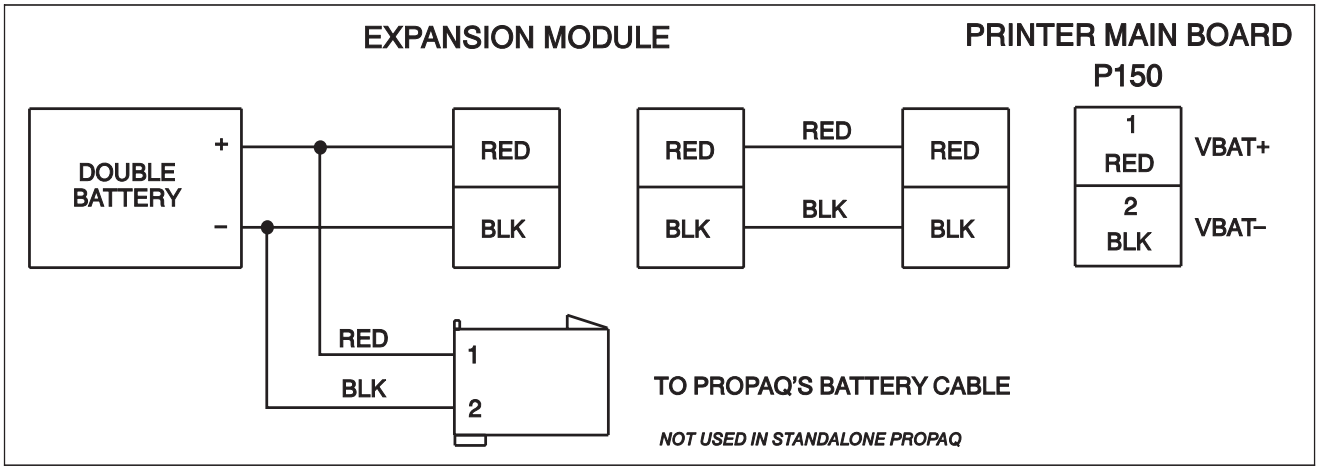

Fig. 7-21. Expansion Module Battery to Printer Cable

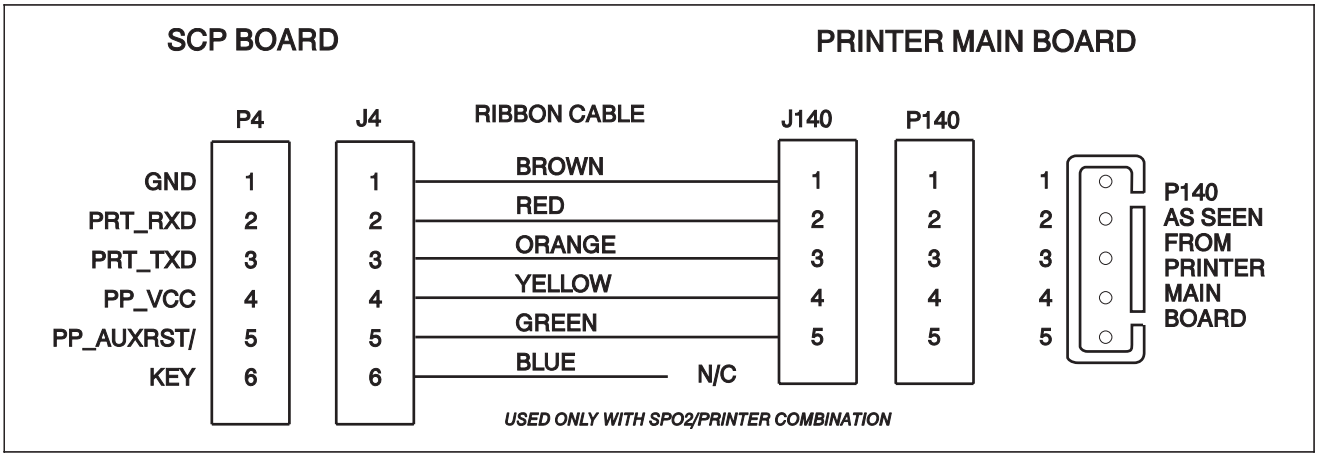

Fig. 7-22. SCP Board to Printer Main Board Cable

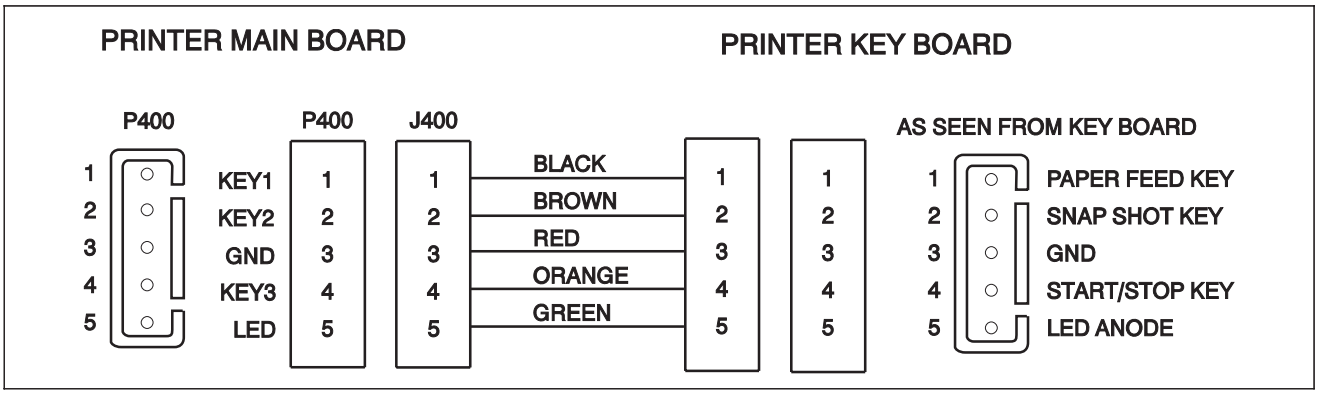

Fig. 7-23. Printer Main Board to Key Board Cable

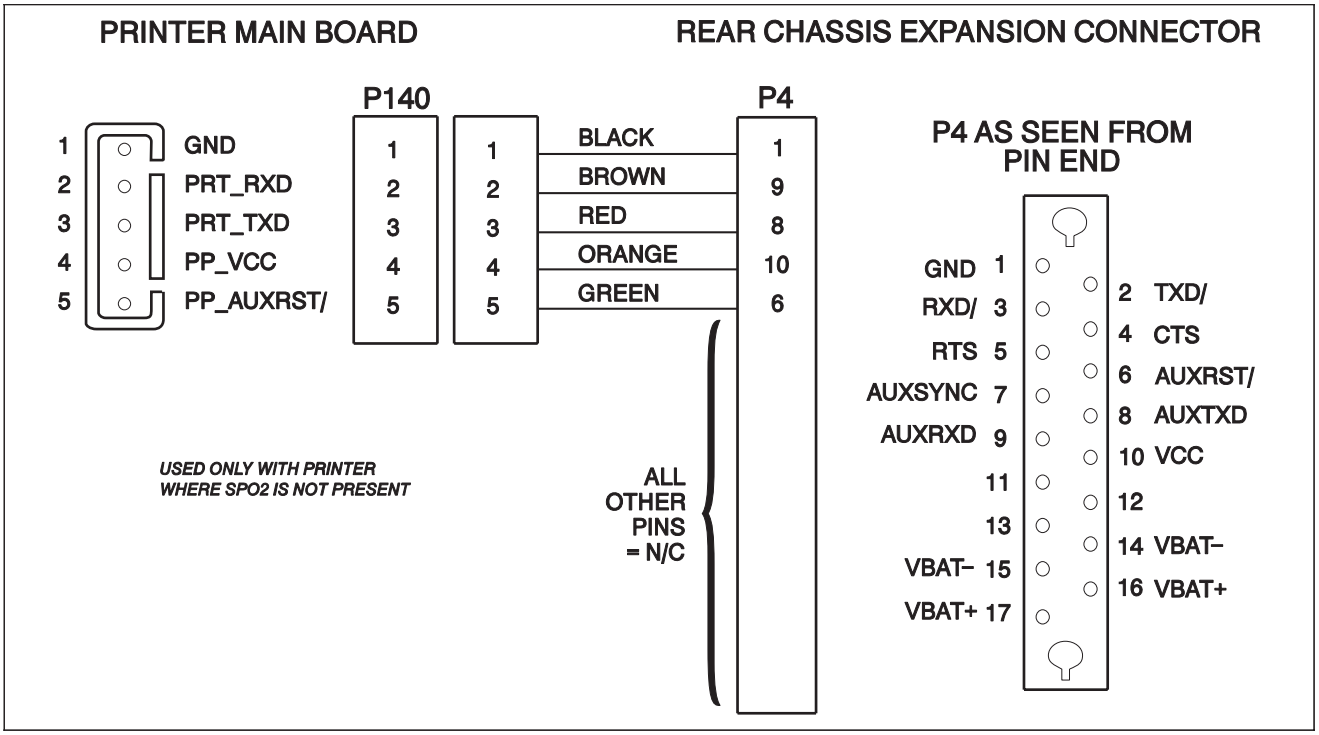

Fig. 7-24. Printer Main Board to Rear Chassis Expansion Connector Cable

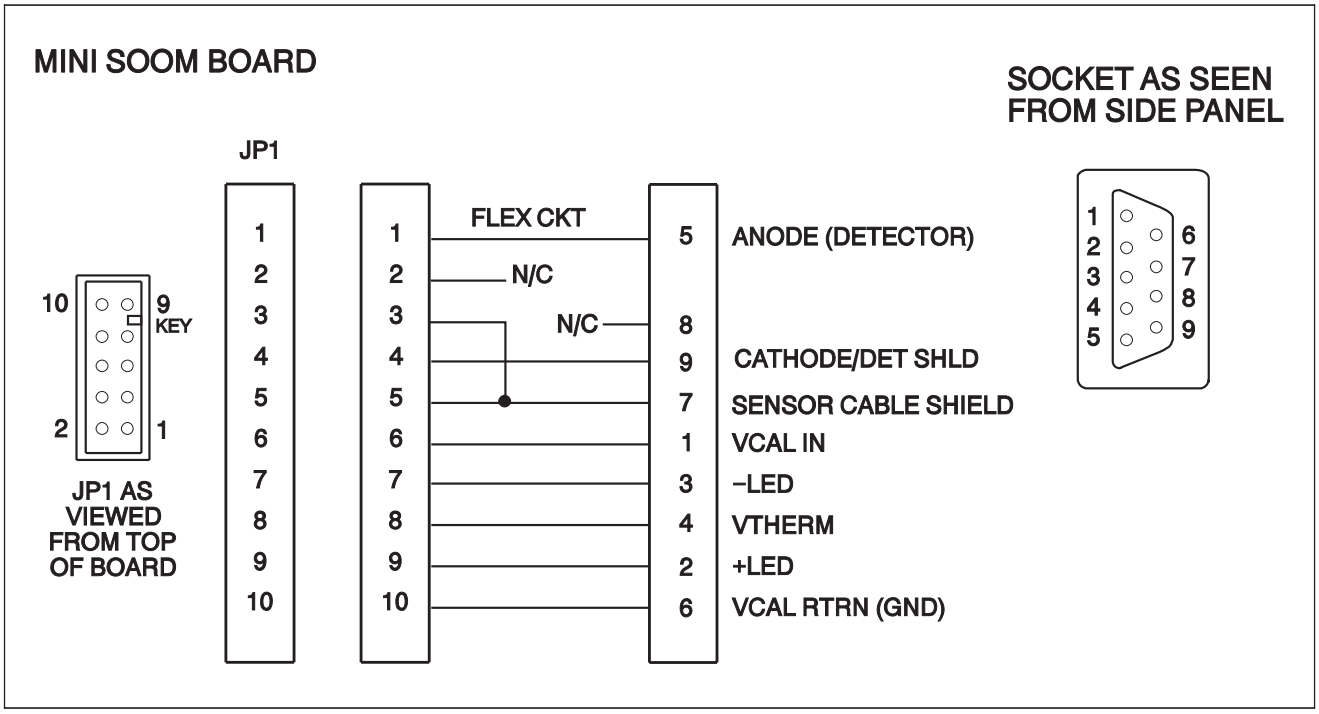

Fig. 7-25. Mini SOOM Brd to Sub D Oximeter Sensor Cable

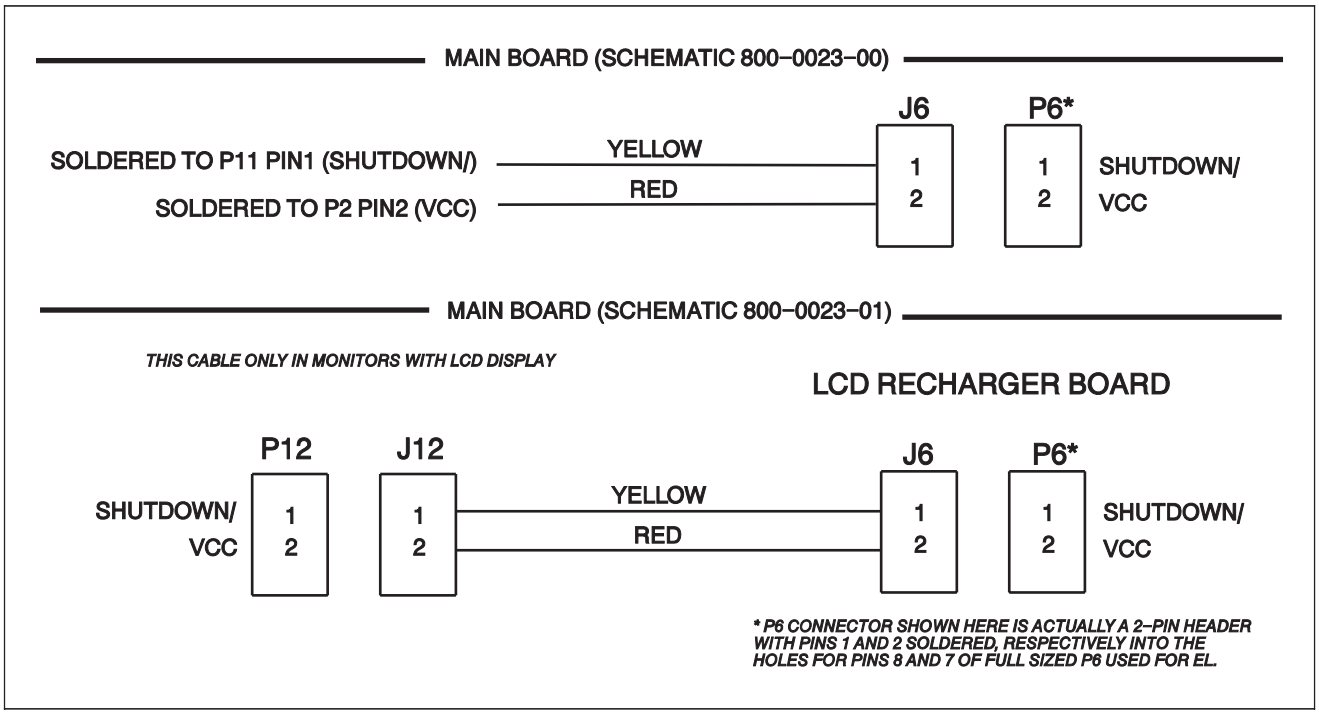

Fig. 7-26. Main Board to LCD Recharger Board Cable

ANALOG CHANNELS, ISO CPU AND DISPLAY CONTROL

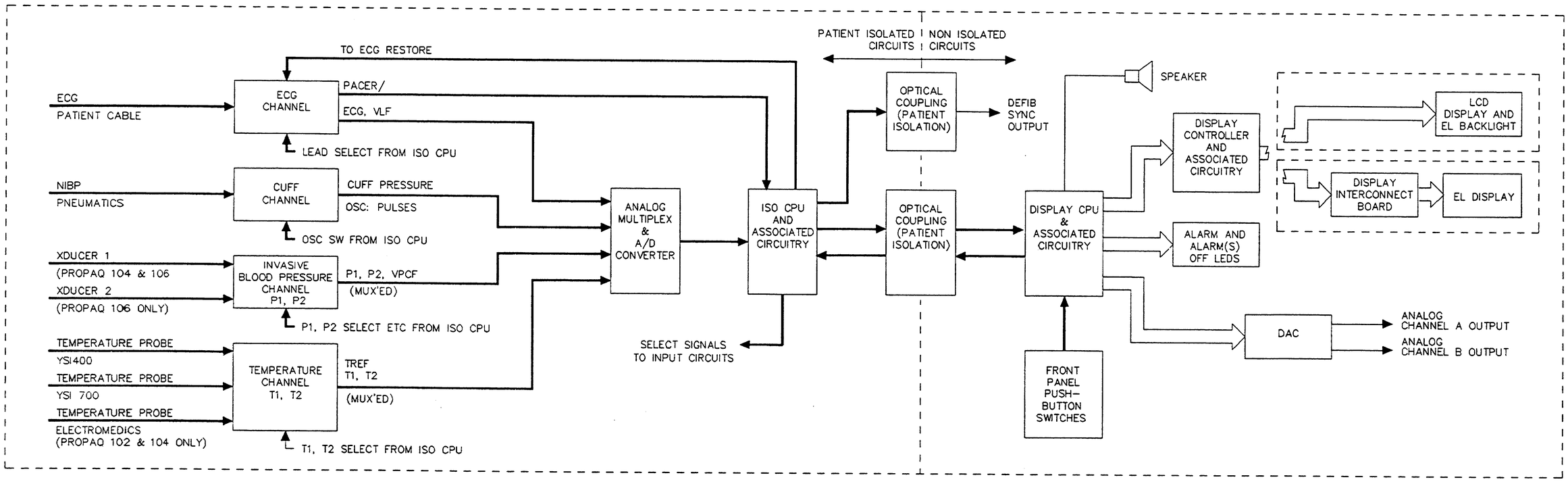

SWITCHING POWER SUPPLY/REGULATOR, RECHARGER AND PLUG-IN POWER SUPPLY

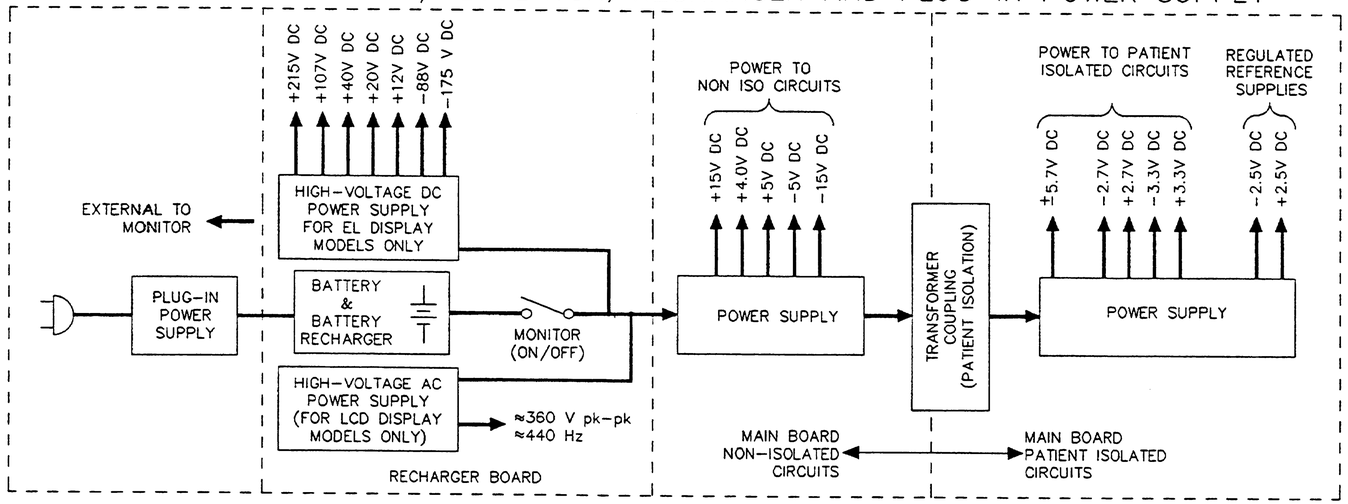

NON INVASIVE BLOOD PRESSURE PNEUMATICS

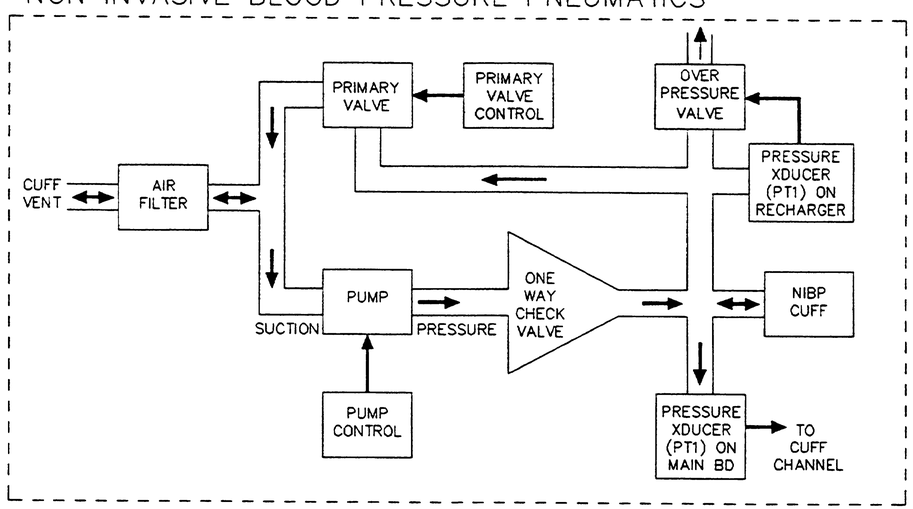

SYSTEM LEVEL BLOCK DIAGRAM
Figure 7-27

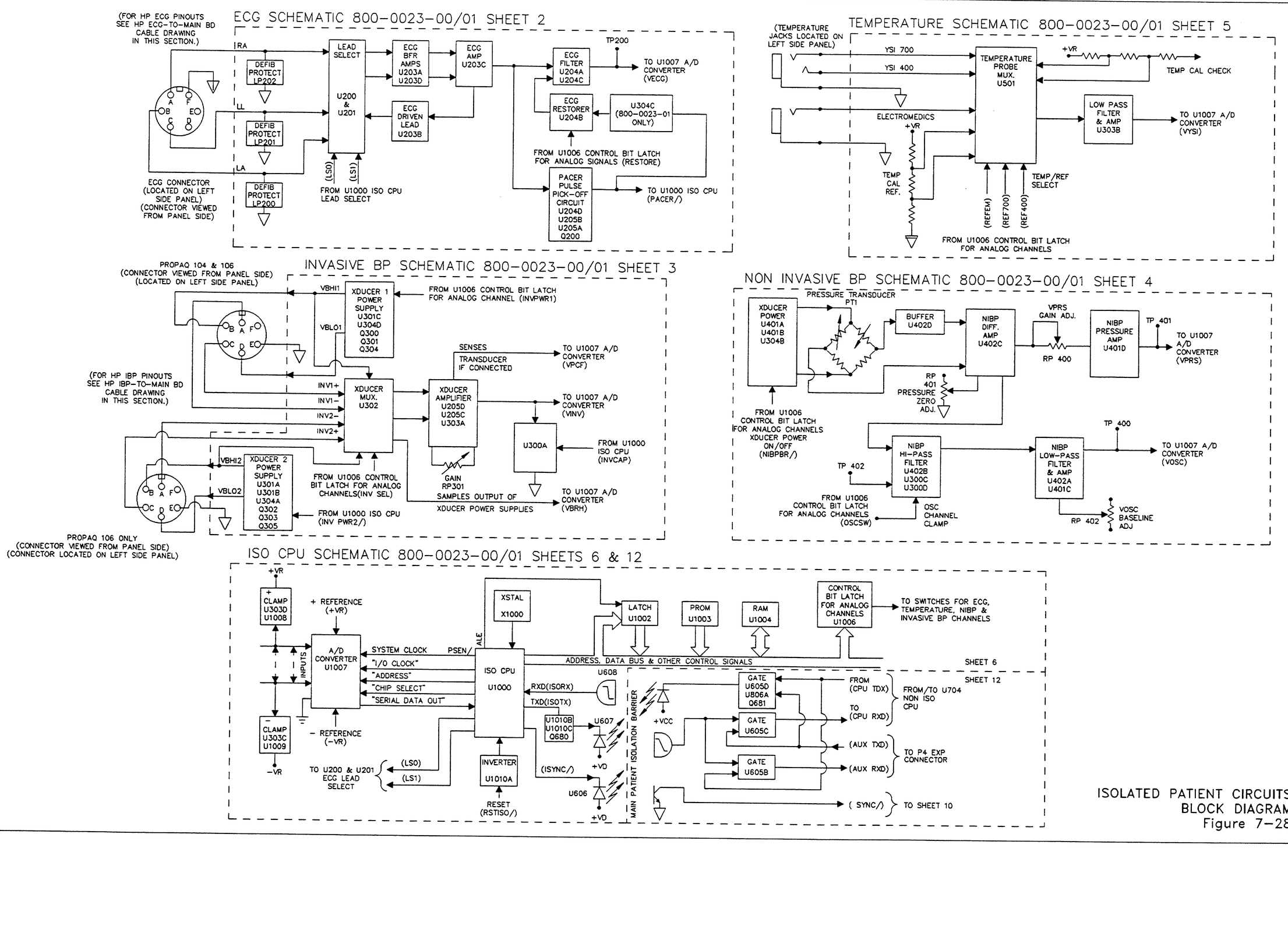

ISOLATED PATIENT CIRCUITS
BLOCK DIAGRAM
Figure 7-28

DISPLAY CPU, DISPLAY CONTROLLER, ANALOG OUTPUTS, AND AUDIO SCHEMATIC 800-0023-00/01 PAGES 7, 8 & 9

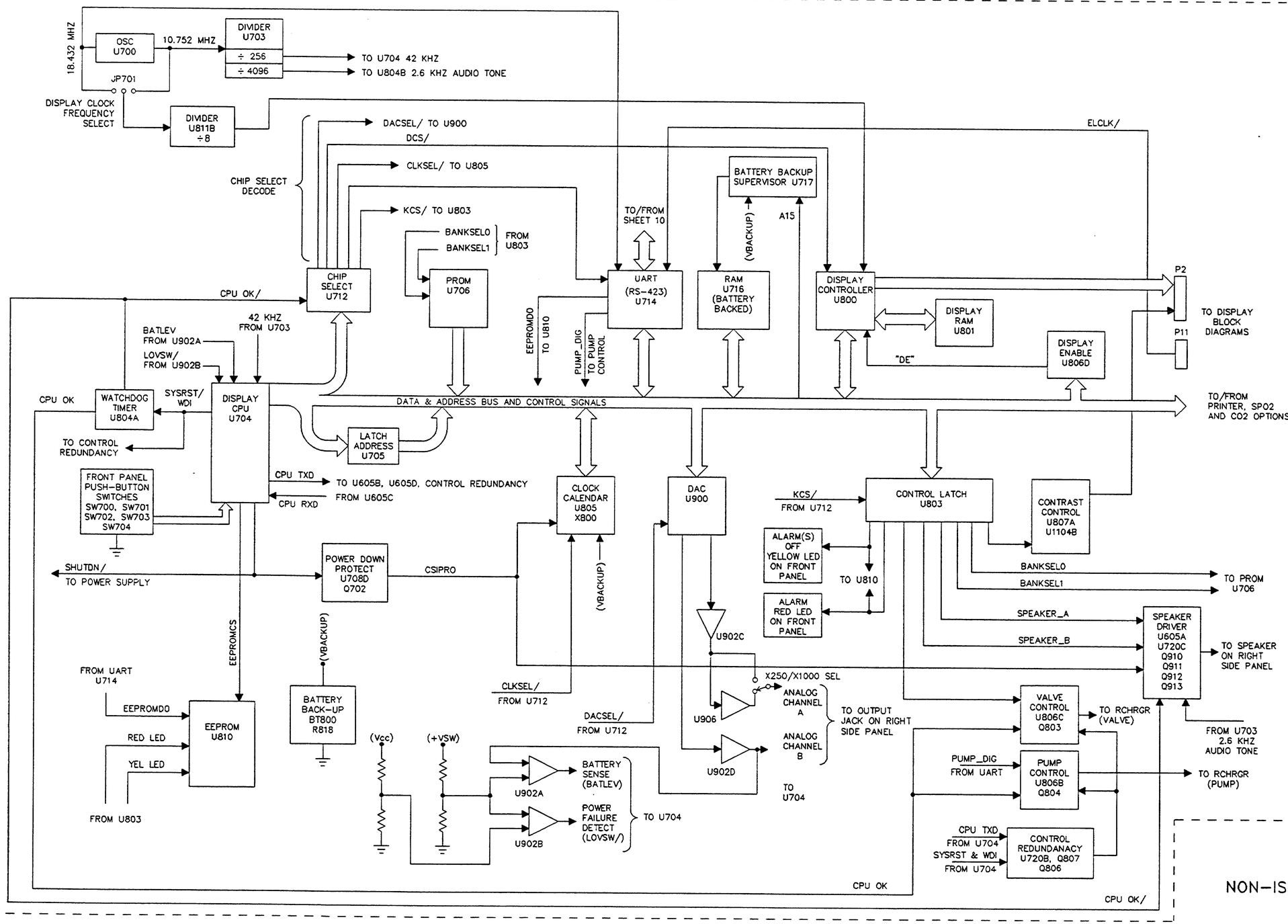

NON-ISOLATED CIRCUITS
BLOCK DIAGRAM
Figure 7-29

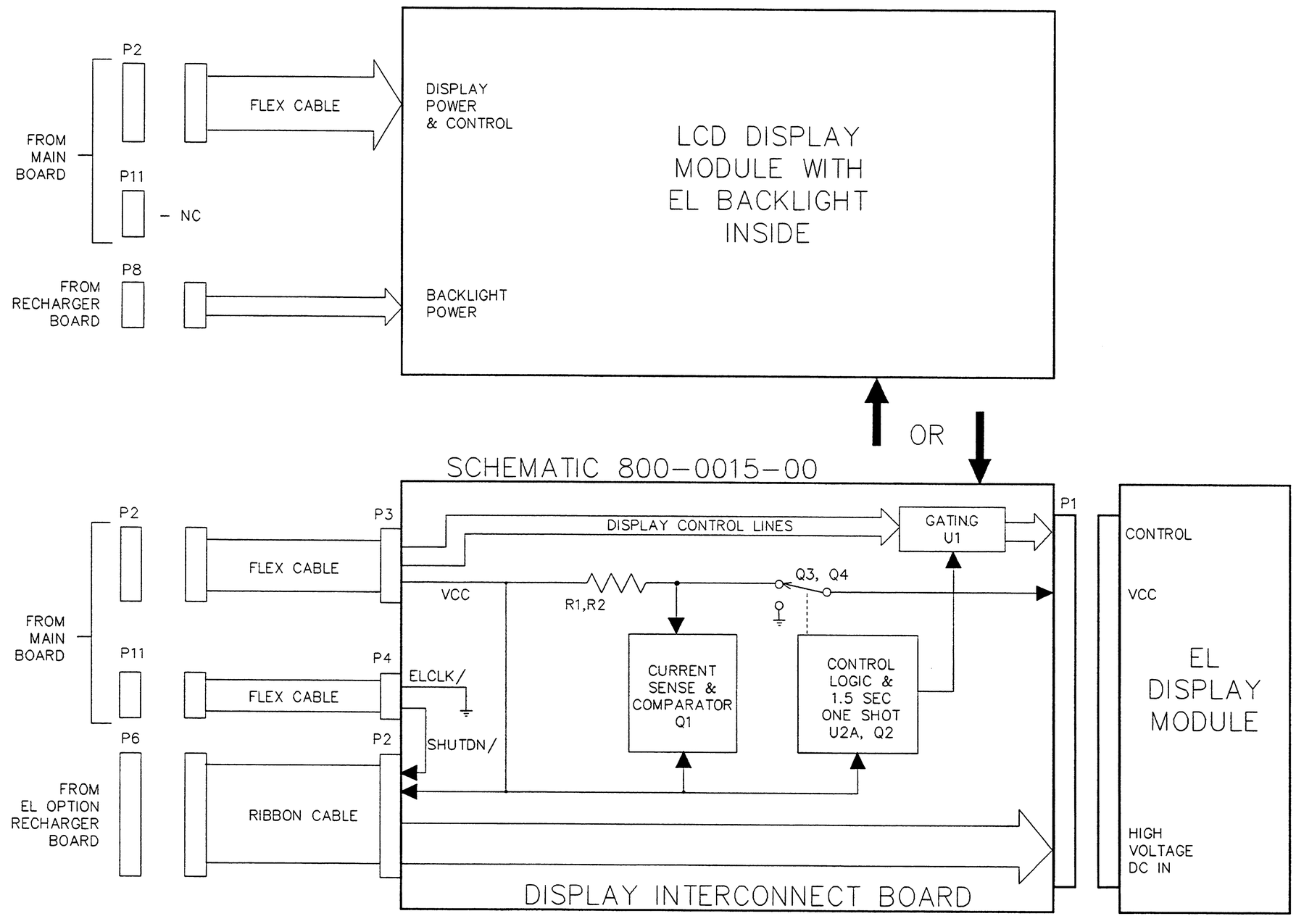

DISPLAYS
BLOCK DIAGRAM
Figure 7–30

EL OPTION RECHARGER SCHEMATIC 800-0034-00

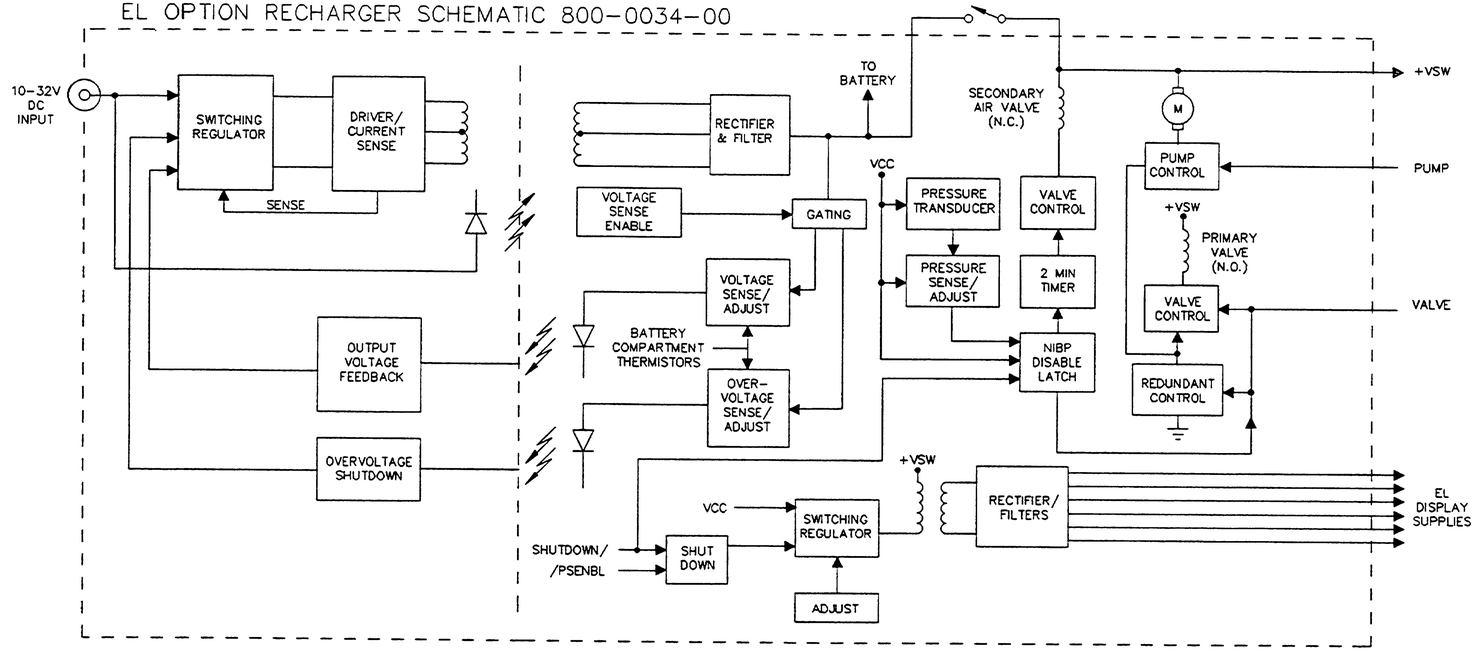

MAIN BD. SWITCHING POWER SUPPLY/REGULATOR SCHEMATIC 800-0023-00/01 PAGE 11

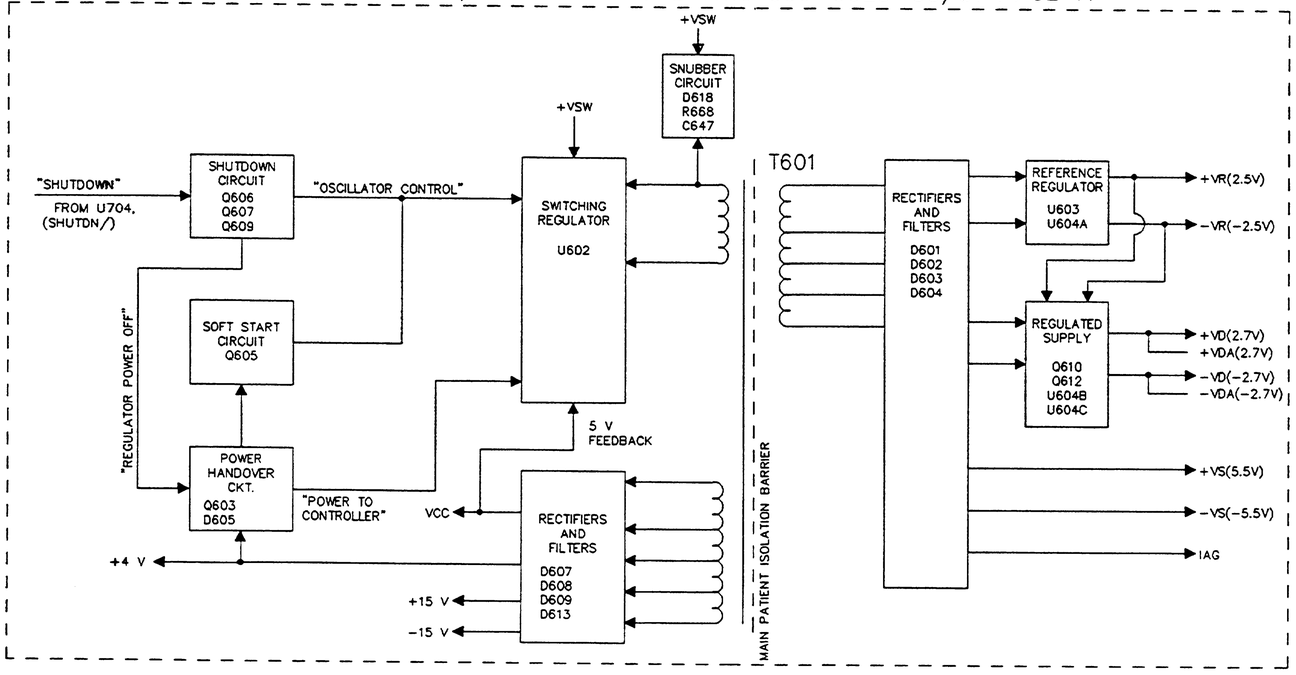

120V DIRECT PLUG-IN POWER SUPPLY

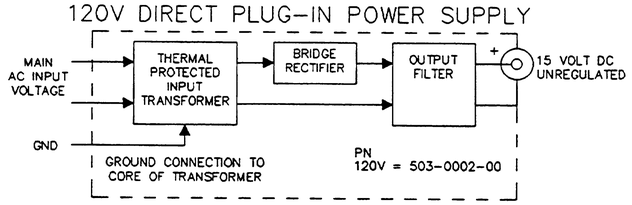

100V 50/60 Hz, 230V, 50 Hz DESK TOP POWER SUPPLY

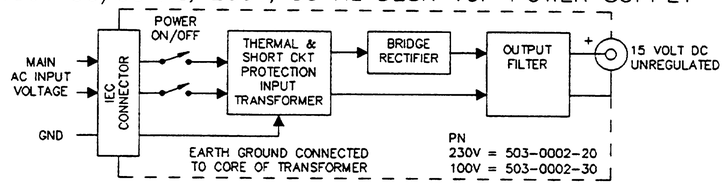

POWER DISTRIBUTION AND CONTROL

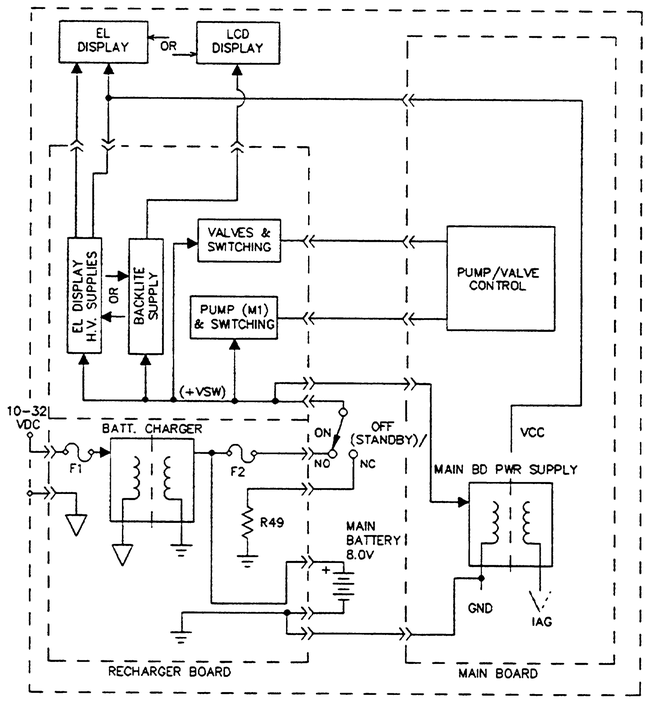

EL RECHARGER & POWER SUPPLIES/DISTRIBUTION BLOCK DIAGRAM
Figure 7-31

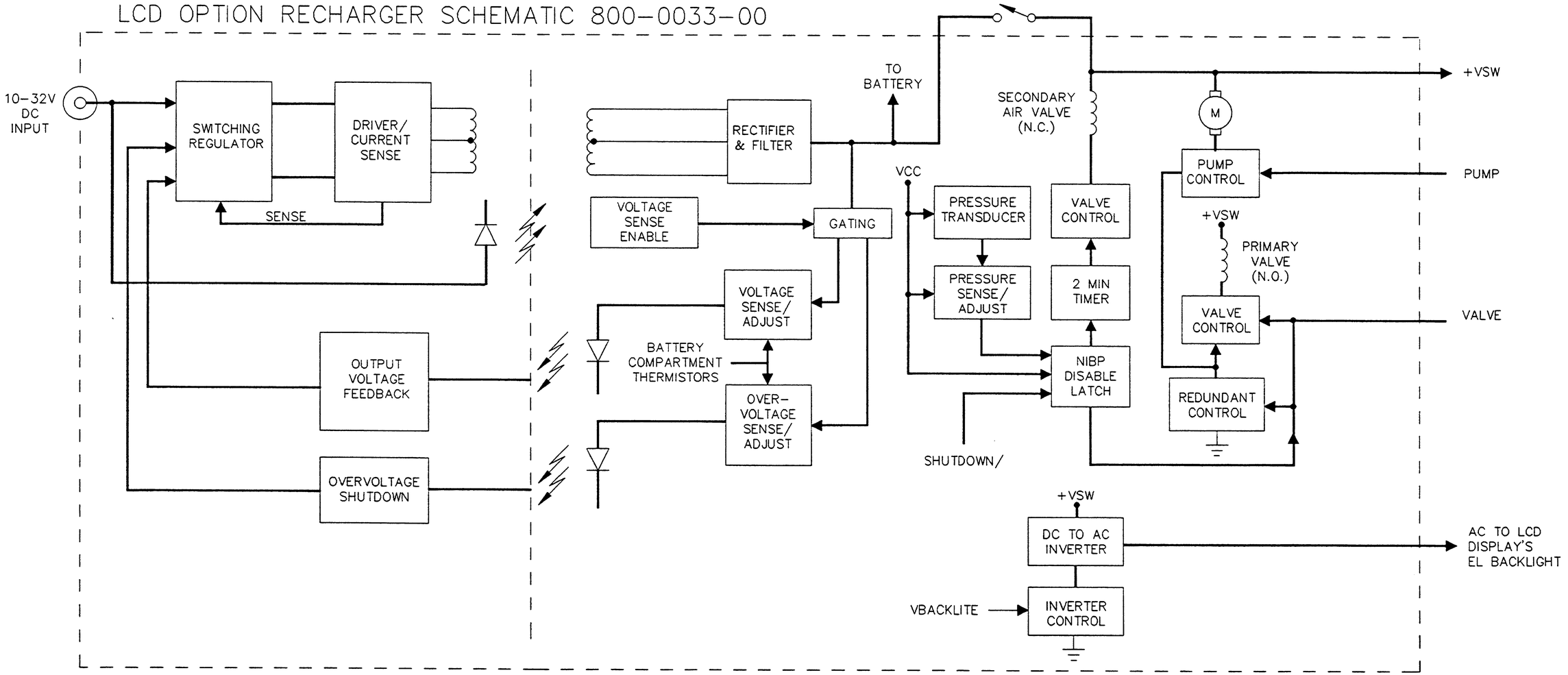

LCD RECHARGER
BLOCK DIAGRAM
Figure 7-32

REVISIONS			
REV.	CHANGE ORDER NUMBER	DRAFTED BY	CHECKED BY
E	CO 930046	CLG 2/3/93	CLG 2/3/93
F	CO 930281	CLG 6/28/93	

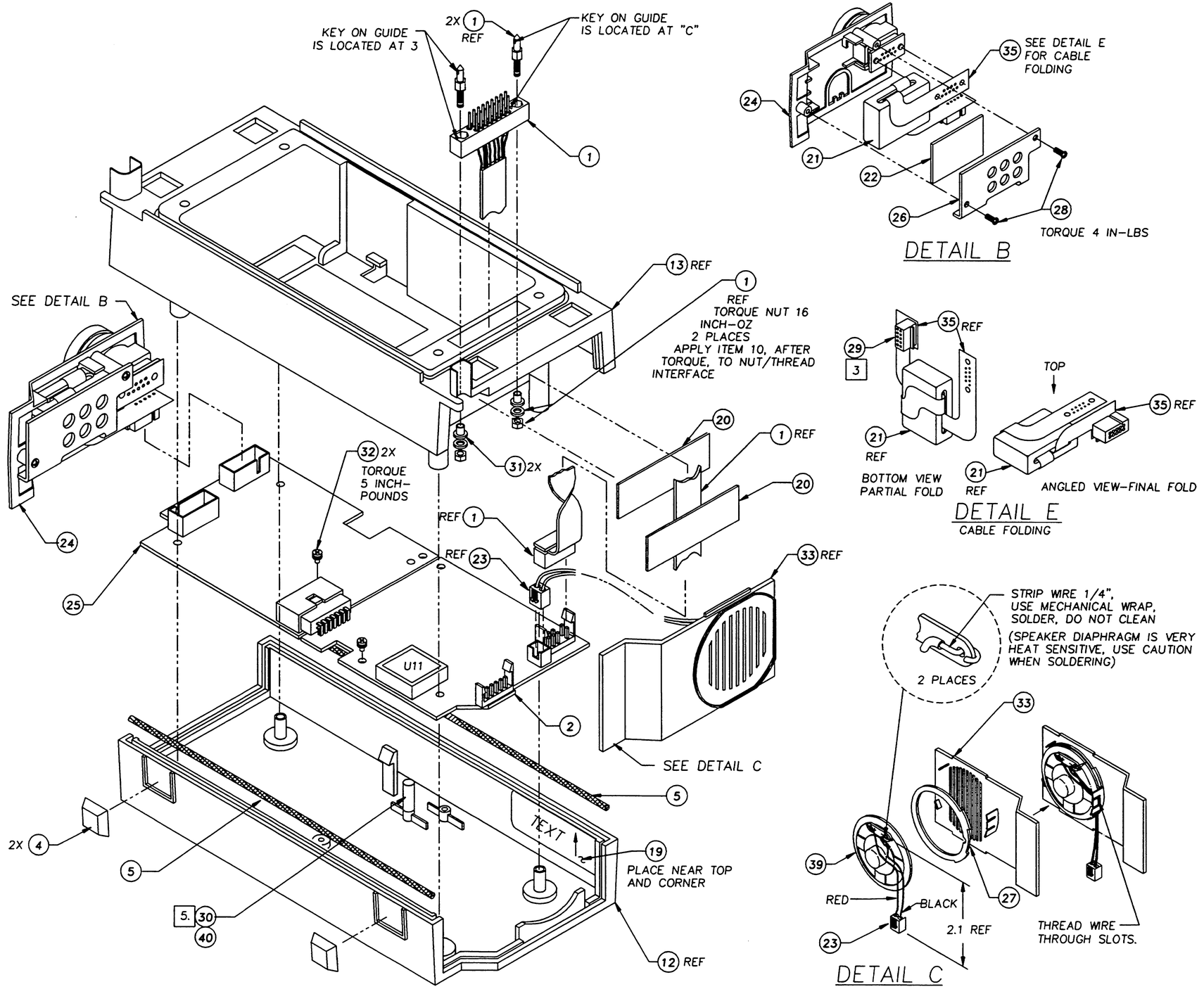

DETAIL B

DETAIL E
CABLE FOLDING

DETAIL C

NOTES: UNLESS OTHERWISE SPECIFIED

1. ITEMS 3, 7, 8, AND 9 ARE NOT ASSEMBLED INTO THE UNIT WHEN THE BAQPAQ IS SHIPPED ALONE.
2. INSTALL ITEM 34 AFTER ITEM 17, FOR OXIMETERS FOR PROPAQS SIEMENS ONLY: PUT ITEM 34 IN ITEM 41 AND SEND WITH UNIT TO PACKAGING.
3. SOLDER PINS TO FLEX CABLE USING SOLDERING IRON WITH 575° FAHRENHEIT TEMPERATURE. DO NOT SOLDER FLEX CABLE THAT HAS BEEN EXPOSED TO HUMIDITY DURING STORAGE. CLEAN SOLDERED AREAS ON FLEX CABLE WITH FREON, ACID BRUSH, AND KIM WIPE.
   CAUTION, EXCESS FREON CAN CAUSE DAMAGE TO THE PLASTIC PANEL.
4. DRAWING DESIGNATOR OF THIS ASSEMBLY DRAWING IS "CW".
5. SECURE PIN, ITEM 30, IN BOSS WITH LOCTITE 416 ADHESIVE.
6. TORQUE TOLERANCES ARE ±5%.

ITEM	DESCRIPTION
41	ZIPLOCK BAG 3"X5"
40	ADHESIVE, LOCTITE 416
39	SPEAKER, SPo2, BLACK CONE
35	FLEX CIRCUIT, SPo2, D CONNECTOR
33	PANEL, SPEAKER SPo2
32	SCREW, 4-40x.25", PHL, PHD, SEMS
31	WASHER, #2, SHLD, .098 ID, NYLON
30	PIN, BAQPAQ MECHANICAL SUPPORT
29	SOCKET, 10 PIN, DUAL ROW, BOARD MOUNT
28	SCREW, 4-24, PH, .31",SLT, TYPE BT
27	GASKET, SPEAKER
26	CLAMP, FERRITE BEAD
25	SUBASSEMBLY, MAIN BOARD, SPo2
24	SUBASSEMBLY, CONN PANEL
23	SUBASSEMBLY, SPEAKER CABLE
22	GASKET, ADHESIVE, SINGLE SIDED, .062 THICK
21	CORE, MAGN, 1.0"L, 1.5"W, .487..075x1.05 SLOT
20	TAPE, ACRYLIC FOAM, DOUBLE COATED 3/4 x .080
19	LABEL, SPo2, FUSE
13	CHASSIS, SPo2
12	PANEL, REAR, SPo2
10	ADHESIVE, LOCTITE #222
5	O-RING CORD, .070" OD.
4	FOOT, PAD, WHITE,.50" SQ. x .12" H, SILICONE
2	SUBASSEMBLY, PCB, SCRAP, SPo2
1	ASSEMBLY, EXPANSION CABLE
	PARTS LIST (SEE BOM FOR PART NUMBER)

This drawing may contain information which is the proprietary property of PROTOCOL SYSTEMS, INC. This drawing is received in confidence and it's contents may not be disclosed without the prior written consent of PROTOCOL SYSTEMS, INC.

PROTOCOL® SYSTEMS, INC. BEAVERTON, OR 97005

TOLERANCES: DIMENSIONS ARE IN INCHES .XXX = ± .XX = ± ANGLES = ±

DO NOT SCALE DRAWING

DWN. BY	DM&C	DRAWING TITLE: ASSEMBLY DRAWING, SpO_2 FOR PROPAQ WITH BEADED SIDE PANEL
CHK. BY	M. BUCK 12/12/91	
ENGR. APPR.	J. SANELLE 12/12/91	SIZE: D
QUA. APPR.	C. JACKSON 12/12/91	DRAWING NO.: 824-0204-00
MFG. APPR.	M. BUCK 12/12/91	REV.: F
		SCALE: NONE
		SHEET 1 OF 2

DRAWING NO. 824-0204-00 REV. F

Figure 7-33

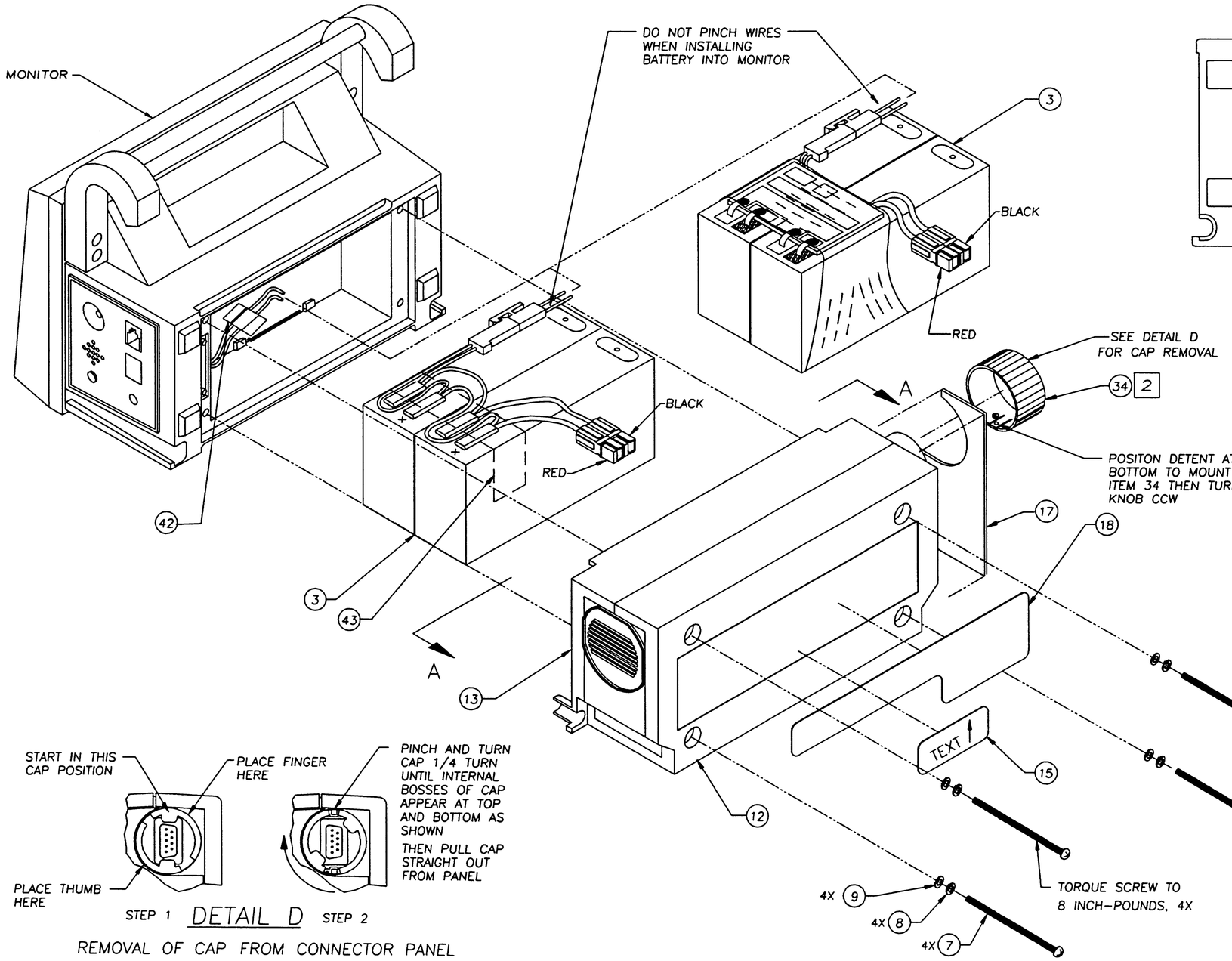

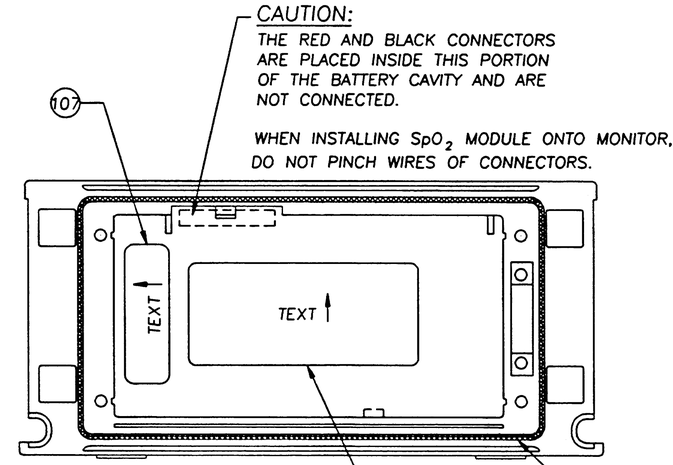

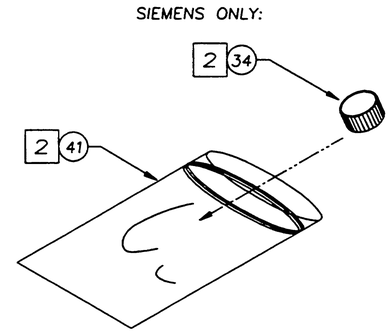

REMOVAL OF CAP FROM CONNECTOR PANEL

ITEM	DESCRIPTION
	PARTS LIST (SEE BOM FOR PART NUMBER)
107	LABEL, SIEMENS SERIAL NUMBER
43	TAPE, BLACK, .75" WIDE
42	TAPE, WHITE, PLASTIC, .75" WIDE
34	LOCK, "D" CONNECTOR
18	LABEL, REAR
17	LABEL, SPO2 CONNECTOR PANEL
15	LABEL, SERIAL NUMBER
14	LABEL, DOUBLE BATTERY, REPLACEMENT
13	CHASSIS, SPO2
12	PANEL, REAR, SPO2
9	WASHER, #6, FLAT, SS
8	WASHER, #6, SPLT LK, SS
7	SCREW, 6-32 X 2.75"L, PHL, PHD, SS
6	O-RING, 5.25 ID, SECTION 1/16
3	BATTERY ASSEMBLY

SIZE	DRAWING NO.	REV.
D	824-0204-00	F
SCALE: NONE	SHEET 2 OF 2	

DRAWING NO. 824-0204-00 REV. F

DO NOT SCALE DRAWING

Figure 7-34

NOTES:

10. INSTALL LED WITH FLAT TOWARDS ROUND PAD.

11. CUT O-RING MATERIAL AT AN ANGLE AT BEGINNING AND END AS SHOWN. DO NOT OVERLAP "O"-RING MATERIAL

12. DESIGNATORS 8, 26, 28, 31, 34, 54, 57, 61, 65, 99 AND 101 ARE PRESENT ONLY WITH PRINTER OPTION.

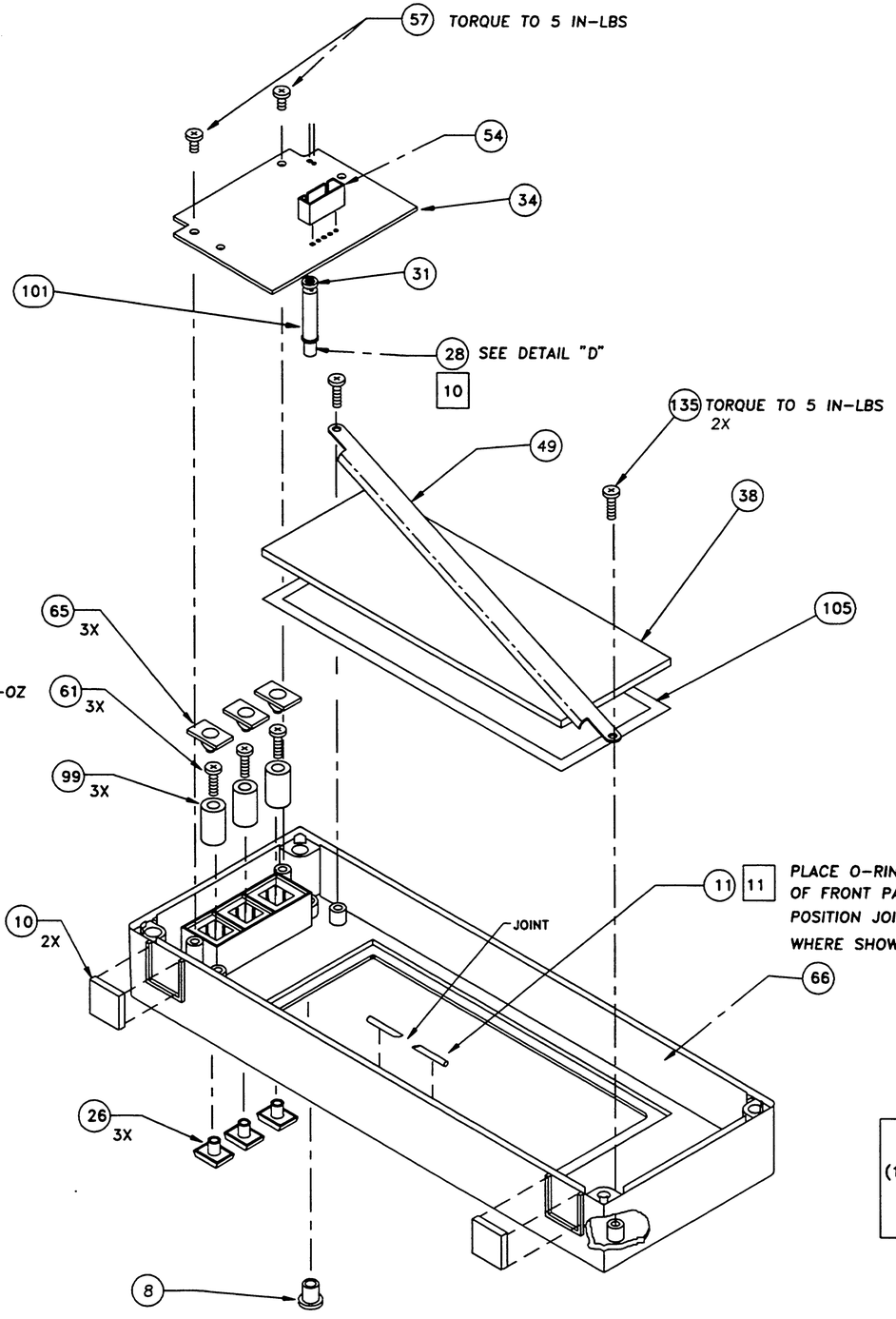

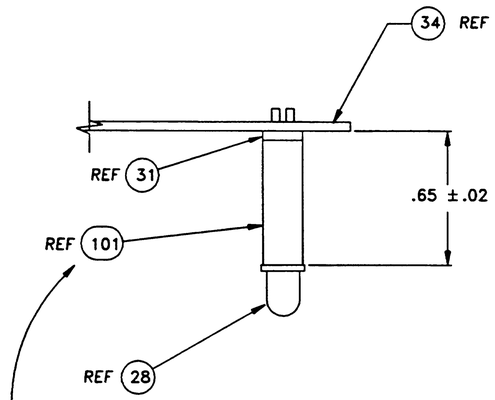

DETAIL D

ITEM	DESCRIPTION
135	SCREW, 4-40X.25, PHL, PHD, external
105	GASKET, ADH, EMP EL WINDOW
101	SPACER, LED, 5/8 LONG, NYLON
99	NYLON SPACER
66	FRONT PANEL, EMP EL
65	KEY, ELASTROMERIC
61	SCREW, #4
57	SCREW, 4-4 x .25, PHL, PHD, SEMS
54	HEADER, 5-PIN
49	BRACE, EMP EL WINDOW COVER
38	COVER, EMP EL WINDOW
34	PCB, PRINTER KEYPAD
31	WASHER #5, 9/32 OD, .140 ID, .030 THK, NYLON
28	LED
26	KEY CAPS
11	CORD, "O" RING
10	PAD FOOT, WHITE, .5" SQ X.12" HIGH, SILICONE
8	LENS, LED, GREEN

LIST OF MATERIALS

EL DISPLAY PANEL
(1.56 INCHES THICK AT BOTTOM)

WITH OR WITHOUT PRINTER
SEE NOTE 12

DRAWING NO. 824-0208-00 REV. J

SIZE	DRAWING NO.	REV.
D	824-0208-00	J
SCALE: NONE	SHEET 2 OF 9	

DO NOT SCALE DRAWING

Figure 7-35

NOTES:

13. INSTALL LED WITH FLAT TOWARDS ROUND PAD.

14. CUT O-RING MATERIAL AT AN ANGLE AT BEGINNING AND END AS SHOWN. DO NOT OVERLAP "O"-RING MATERIAL.

15. DESIGNATORS 8, 26, 28, 34, 54, 57, 61, 65 AND 99 ARE PRESENT ONLY WITH THE PRINTER OPTION.

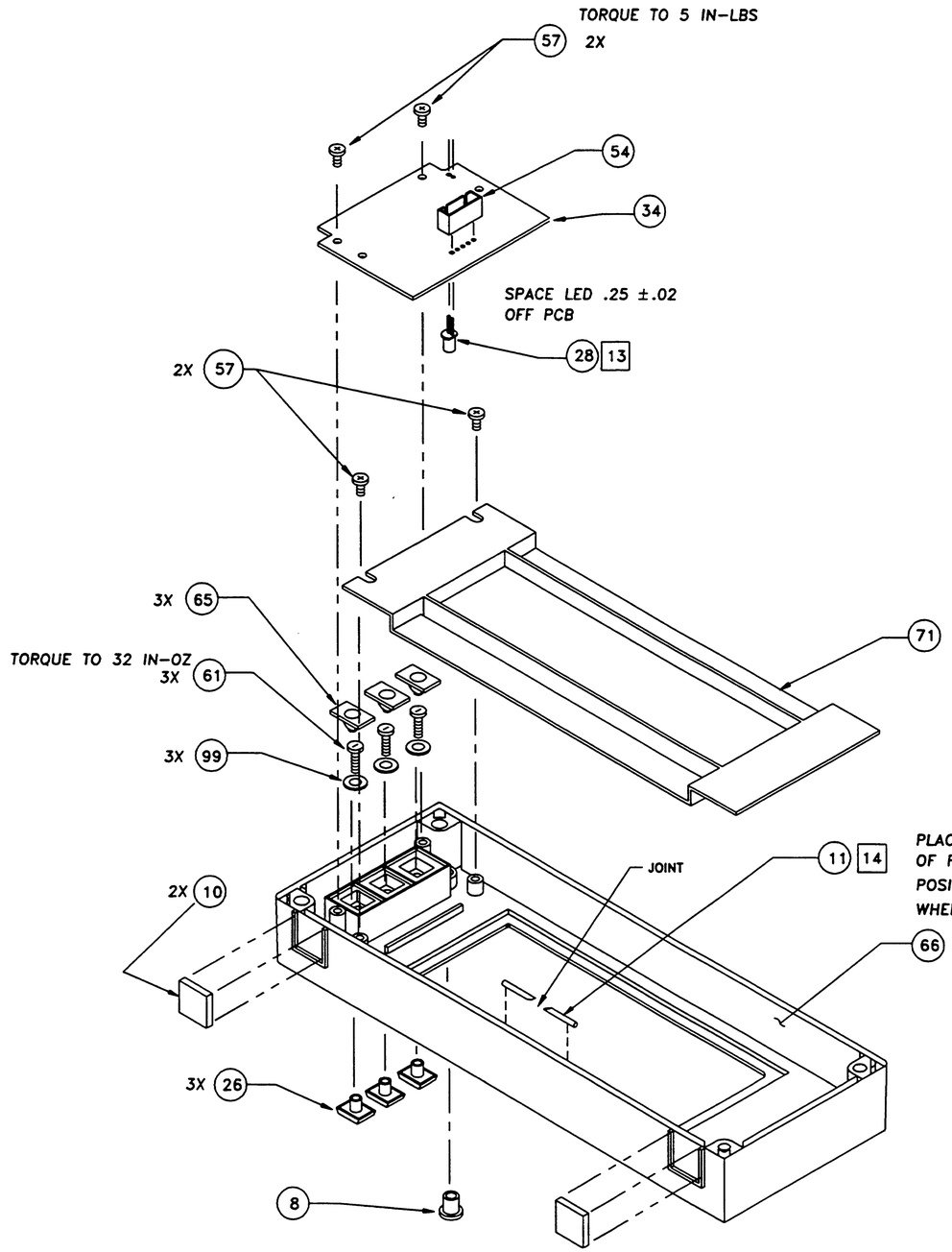

PLACE O-RING AROUND PERIMETER OF FRONT PANEL, CUT TO LENGTH POSITION JOINT OF O-RING APPROX. WHERE SHOWN.

LCD DISPLAY PANEL
(1.00 INCHES THICK AT BOTTOM)
WITH OR WITHOUT PRINTER
SEE NOTE 15

LIST OF MATERIALS

ITEM	DESCRIPTION
99	NYLON SPACER
71	PANEL, FILLER
66	FRONT PANEL, EMP
65	KEY, ELASTOMERIC
61	SCREW, #4
57	SCREW, 4-40X.25, PHL, PHD, SEMS
54	HEADER, 5-PIN
34	PCB, PRINTER KEYPAD
28	LED
26	KEY CAPS
11	CORD, "O" RING
10	PAD, FOOT, WHITE, .5"SQX.12" HIGH, SILICONE
8	LENS, LED, GREEN

DRAWING NO. 824-0208-00 REV. J

SIZE D | DRAWING NO. 824-0208-00 | REV. J
SCALE: NONE | SHEET 3 OF 9

DO NOT SCALE DRAWING

Figure 7-36

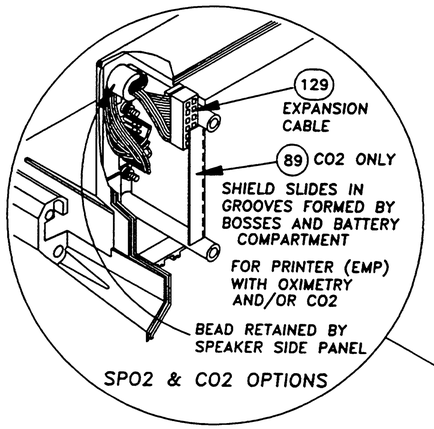

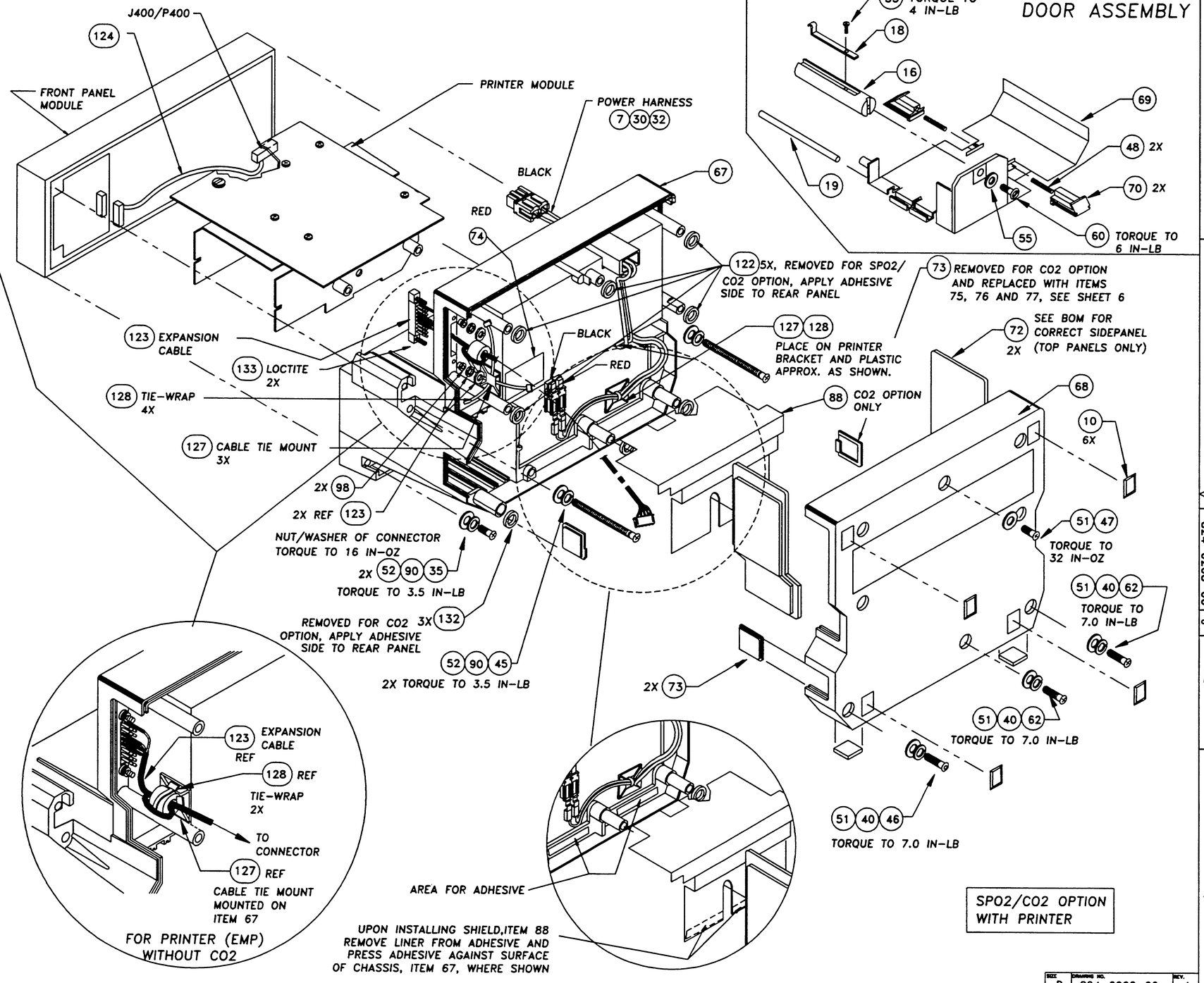

SPO2/CO2 OPTION WITH PRINTER

ITEM	QTY	DESCRIPTION
133	2	LOCTITE
132	3	WASHER, .375 OD, .242 ID, .062 THK, ADH
129	1	SUBASSY, EXPANSION CABLE, EMP/S M/L
128	4	TIE WRAP, NYLON, 3.50" LONG
127	3	4-WAY ADHESIVE BACKED CABLE TIE MOUNT
124	1	SUBASSY, PRINTER KEYPAD, HARNESS
123	1	SUBASSY, EXPANSION CABLE, EMP M/L
122	5	WASHER, .370 OD, .192 ID, .062 THK, ADH
98	2	WASHER, SHLD, #2, .098 ID, NYLON
90	4	WASHER, #6, SPLT LK, SS
89	1	SHIELD, EXPANSION CONNECTOR
88	1	SHIELD, MS CO2
74	1	LABEL, FUSE
73	3	PANEL, FILLER BOTTOM
72	2	PANEL, FILLER TOP
70	2	LATCH, DOOR
69	1	DOOR, BOTTOM
68	1	PANEL, REAR
67	1	CHASSIS, EMP
62	2	SCREW, 8-32X1.50, PHL, PHD, SS
60	1	SCREW, 6-19X.38, TF, PHL, ST, ZINC, PLASTITE
55	1	WASHER, FLAT, #6, SS
53	1	SCREW, 2-32X.19, TYPE B, PHD, PHL, SS
52	4	WASHER, #5, NYLON, REDUCED OD
51	4	WASHER, FLAT, #8, SS
48	2	SPRING, .016 DIA. WIRE, 1" LONG, SS
47	1	SCREW, 8-32X.62 LONG, PHL, PHD
46	1	SCREW, 8-32X1.50", BHD, SOCKET, SS
45	2	SCREW, 6-32X2.50 PHL, PHD, SS
40	3	WASHER, #8 SPLT LK SS
35	2	SCREW, 6-32, .75" LONG, PHD, SS
32	1	HOUSING, RED, 30 AMP
30	1	HOUSING, BLACK, 30 AMP
19	1	SHAFT, DOOR
18	1	SPRING, PAPER TENSION
16	1	PAPER SPINDLE
10	6	FOOT PAD, WHITE, SILICONE
7	1	SUBASSY , POWER HARNESS

LIST OF MATERIALS

SIZE	DRAWING NO.	REV.
D	824-0208-00	J
SCALE: NONE	SHEET 4 OF 9	

DRAWING NO 824-0208-00 REV. J

DO NOT SCALE DRAWING

Figure 7-37

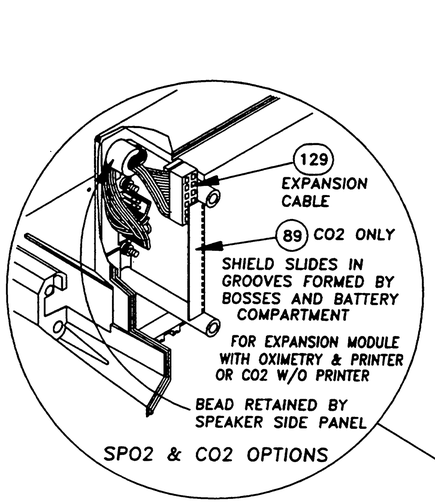

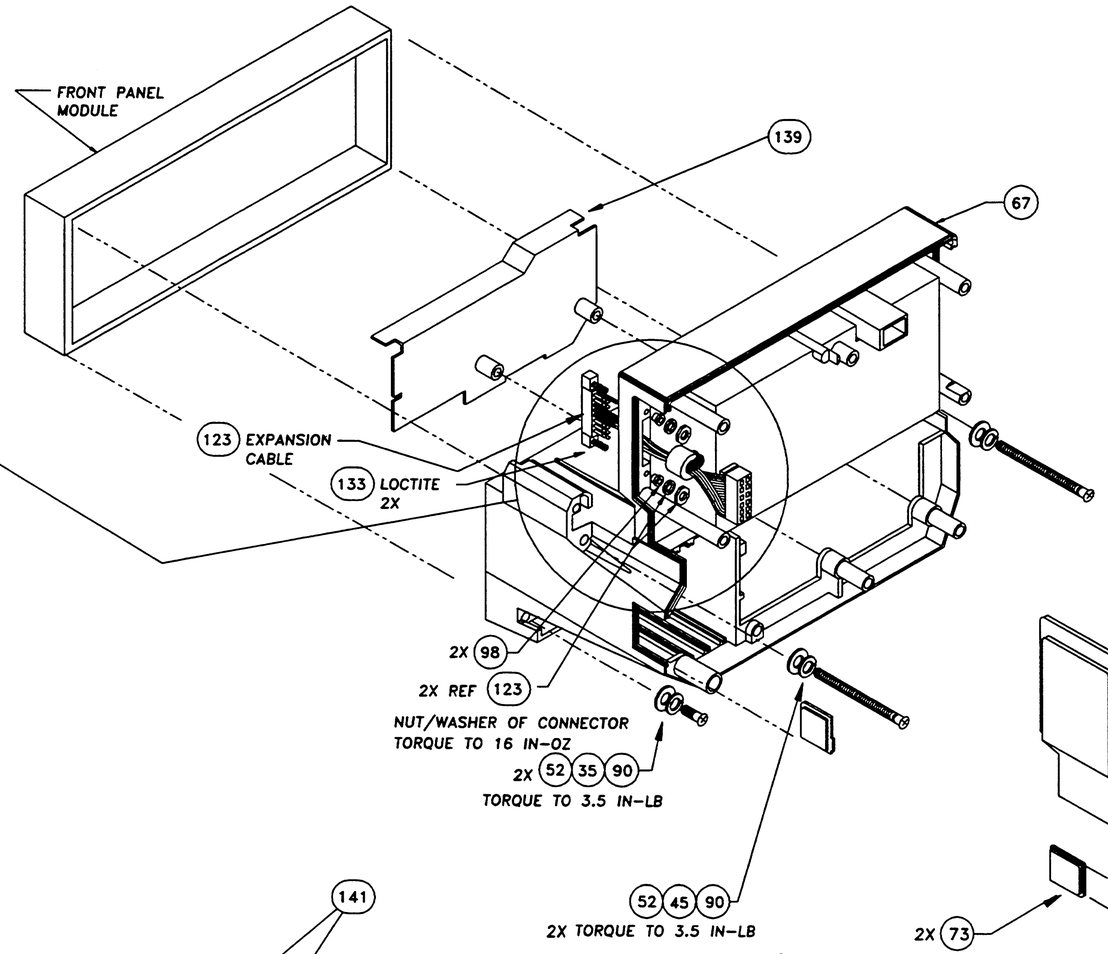

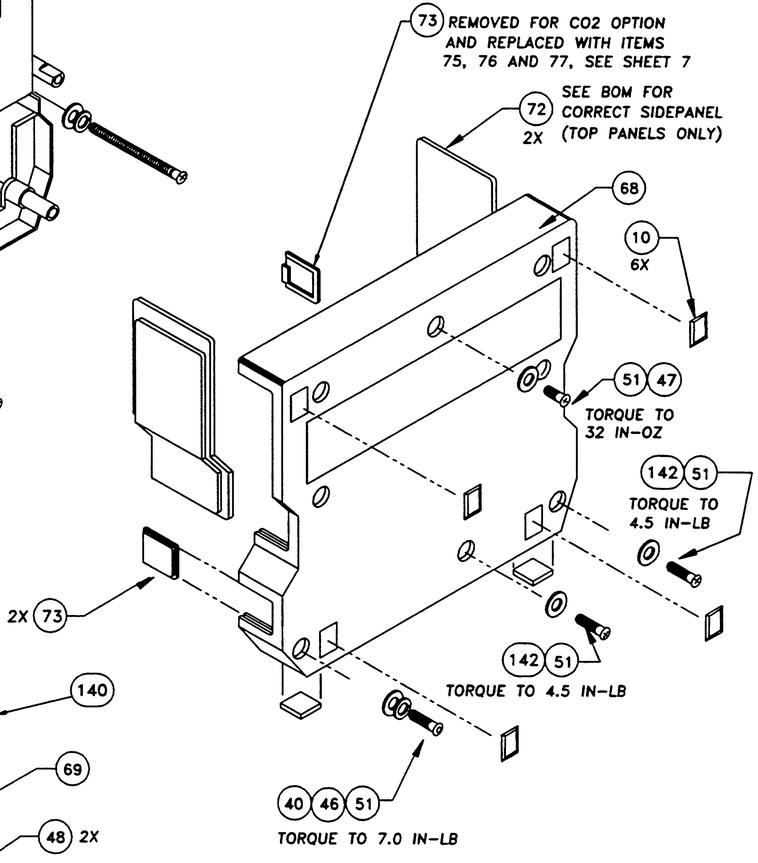

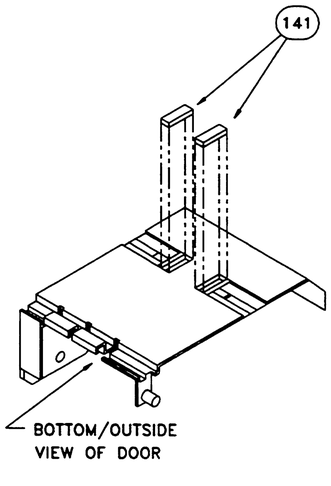

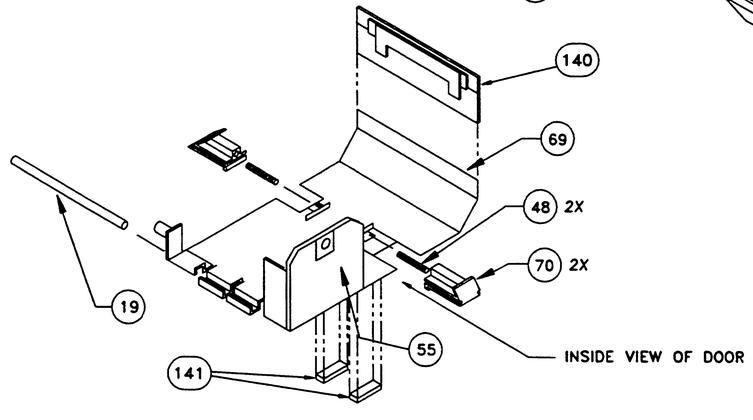

SPO2/CO2 OPTION WITHOUT PRINTER

ITEM	QTY	DESCRIPTION
142	2	SCREW, .25-20X1.25, PHD, PH, STEEL ZINC, THRD FRMNG
141	2	DOOR LOCKING PAD (ADHESIVE BACKED)
140	1	PAPER OPENING COVER
139	1	PRINTERLESS CO2 BRACKET
133	2	LOCTITE
129	1	SUBASSY, EXPANSION CABLE, EMP/S M/L
98	2	WASHER, SHLD, #2, .098 ID, NYLON
90	4	WASHER, #6, SPLT LK, SS
89	1	SHIELD, EXPANSION CONNECTOR
73	3	PANEL, FILLER BOTTOM
72	2	PANEL, FILLER TOP
70	2	LATCH, DOOR
69	1	DOOR, BOTTOM
68	1	PANEL, REAR
67	1	CHASSIS, EMP
62	2	SCREW, 8-32X1.50, PHL, PHD, SS
52	4	WASHER, #5, NYLON, REDUCED OD
51	4	WASHER, FLAT, #8, SS
48	2	SPRING, .016 DIA. WIRE, 1" LONG, SS
47	1	SCREW, 8-32X.62 LONG, PHL, PHD
46	1	SCREW, 8-32X1.50", BHD, SOCKET, SS
45	2	SCREW, 6-32X2.50 PHL, PHD, SS
40	1	WASHER, #8 SPLT LK SS
35	2	SCREW, 6-32, .75" LONG, PHD, SS
19	1	SHAFT, DOOR
10	6	FOOT PAD, WHITE, SILICONE

LIST OF MATERIALS

DRAWING NO. 824-0208-00 REV. J

SIZE D | DRAWING NO. 824-0208-00 | REV. J
SCALE: NONE | SHEET 5 OF 9

DO NOT SCALE DRAWING

Figure 7-38

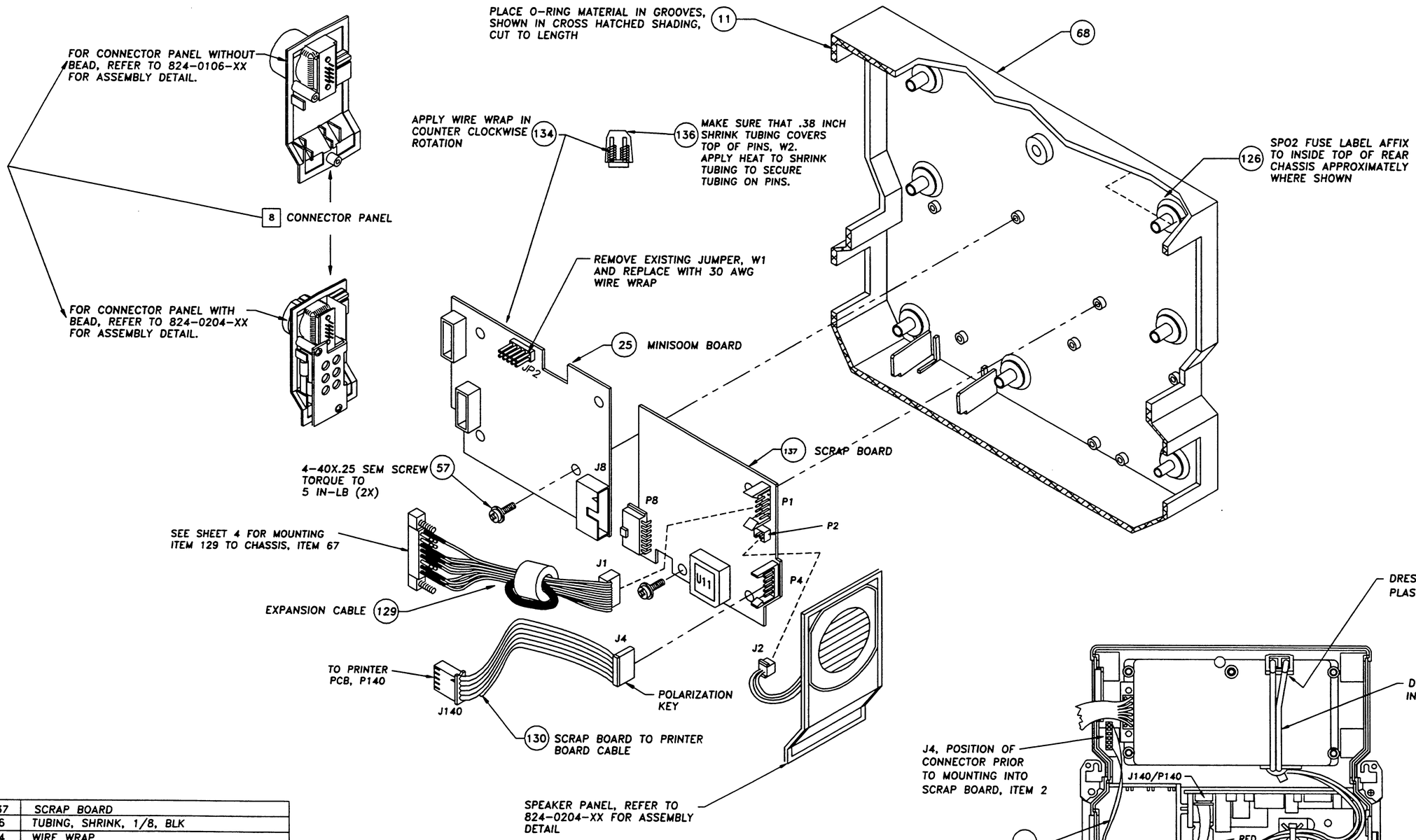

ITEM	DESCRIPTION
137	SCRAP BOARD
136	TUBING, SHRINK, 1/8, BLK
134	WIRE WRAP
130	CABLE, SCRAP/PRINTER BOARD
129	SUBASSY, EXPANSION CABLE, EMP/S M/L
126	LABEL, SPO2 FUSE
68	PANEL, REAR CHASSIS, RECORDER
57	SCREW, 4-40X.25", PHL, PHD, SEMS
25	MINISOOM BOARD
11	"O"-RING

LIST OF MATERIALS

SPO2 OPTION
WITH PRINTER

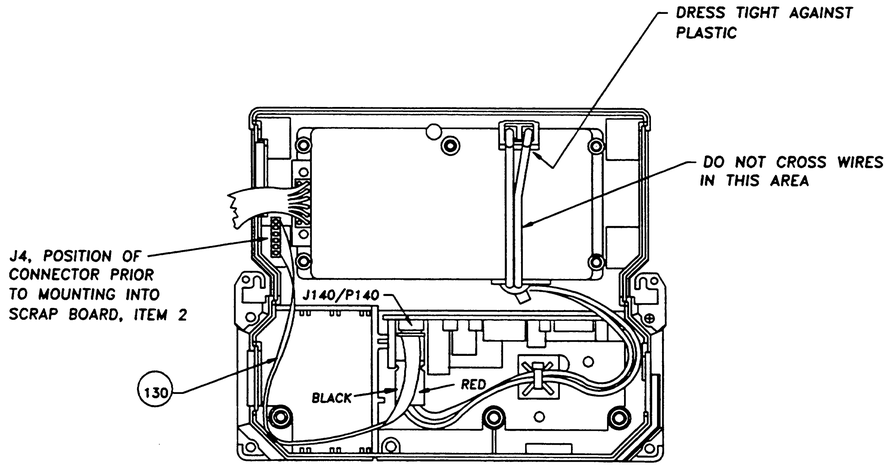

ROUTING OF THE POWER HARNESS AND CABLE ASSY, ITEM 130 FOR THE SPO2 OPTION

DRAWING NO. 824-0208-00 REV. J

SIZE	DRAWING NO.	REV.
D	824-0208-00	J
SCALE: NONE	SHEET 6 OF 9	

DO NOT SCALE DRAWING

Figure 7-39

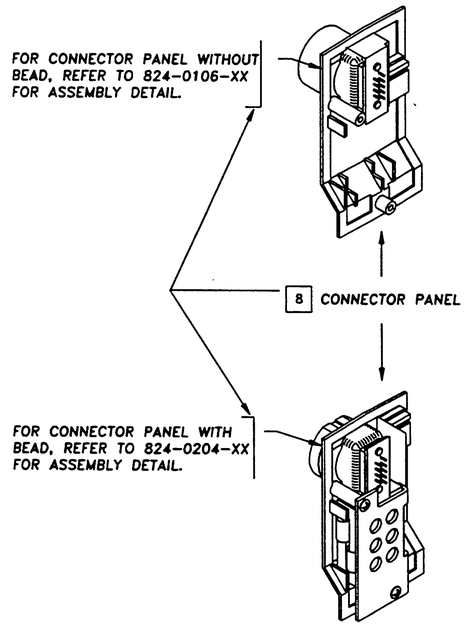

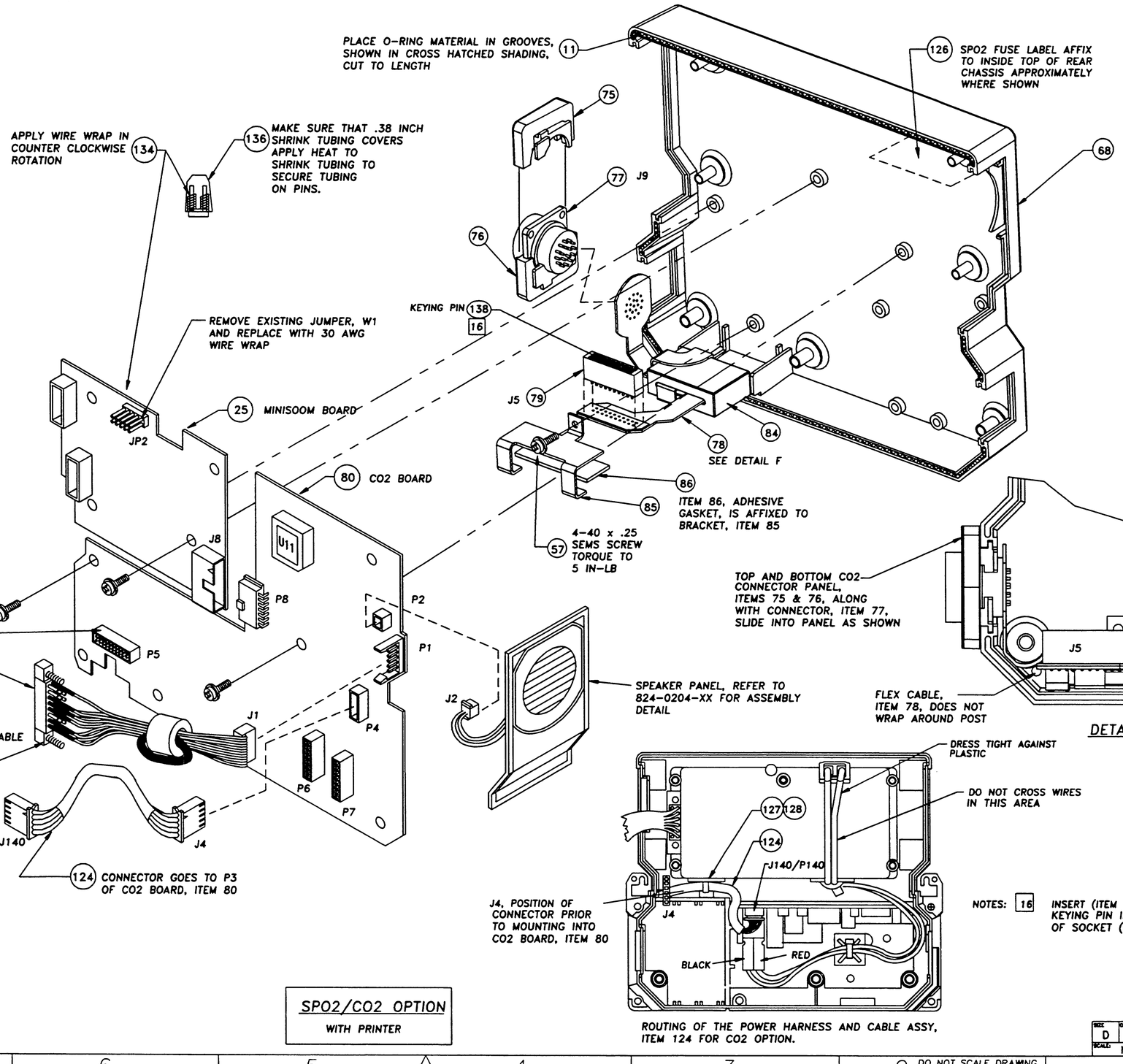

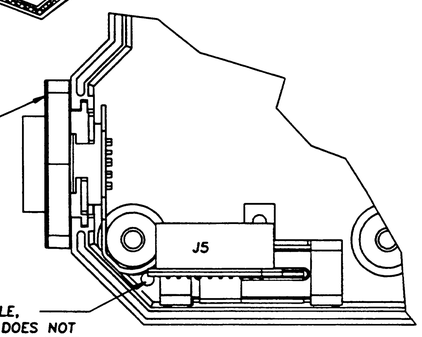

DETAIL F

ROUTING OF THE POWER HARNESS AND CABLE ASSY, ITEM 124 FOR CO2 OPTION.

NOTES: 16 INSERT (ITEM 138) KEYING PIN INTO P6 OF SOCKET (ITEM 79)

ITEM	DESCRIPTION
138	KEYING PIN
136	TUBING, SHRINK, 1/8, BLK
134	WIRE WRAP
129	SUBASSY, EXPANSION CABLE, EMP/S M/L
128	TIE WRAP, NYLON
127	4-WAY ADHESIVE BACKED CABLE TIE MOUNT
126	LABEL, SP02 FUSE
124	CABLE, SCRAP/PRINTER BOARD
86	GASKET, BRACKET
85	BRACKET, BEAD
84	FERRITE BEAD
80	CO2 BOARD
79	CONNECTOR, 20 POS.
78	CABLE, FLEX
77	CONNECTOR, NICOLAY
76	CONN. PANEL - BOTTOM
75	CONN. PANEL - TOP
68	PANEL, REAR CHASSIS, RECORDER
57	SCREW, 4-40X.25", PHL, PHD, SEMS
25	MINISOOM BOARD
11	"O"-RING

LIST OF MATERIALS

SP02/CO2 OPTION
WITH PRINTER

DRAWING NO. 824-0208-00 REV. J

SIZE D | DRAWING NO. 824-0208-00 | REV. J | SCALE NONE | SHEET 7 OF 9

DO NOT SCALE DRAWING

Figure 7-40

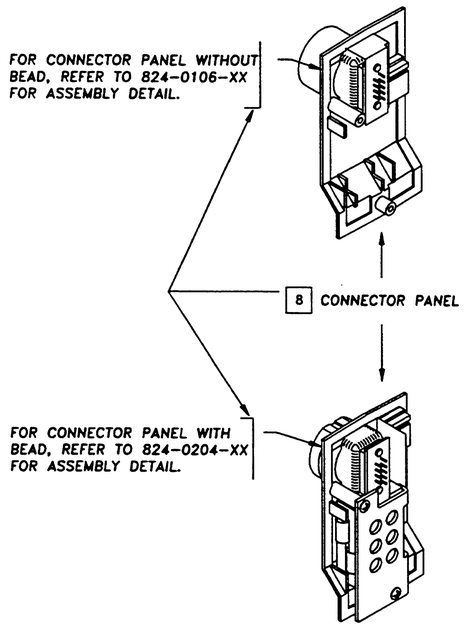

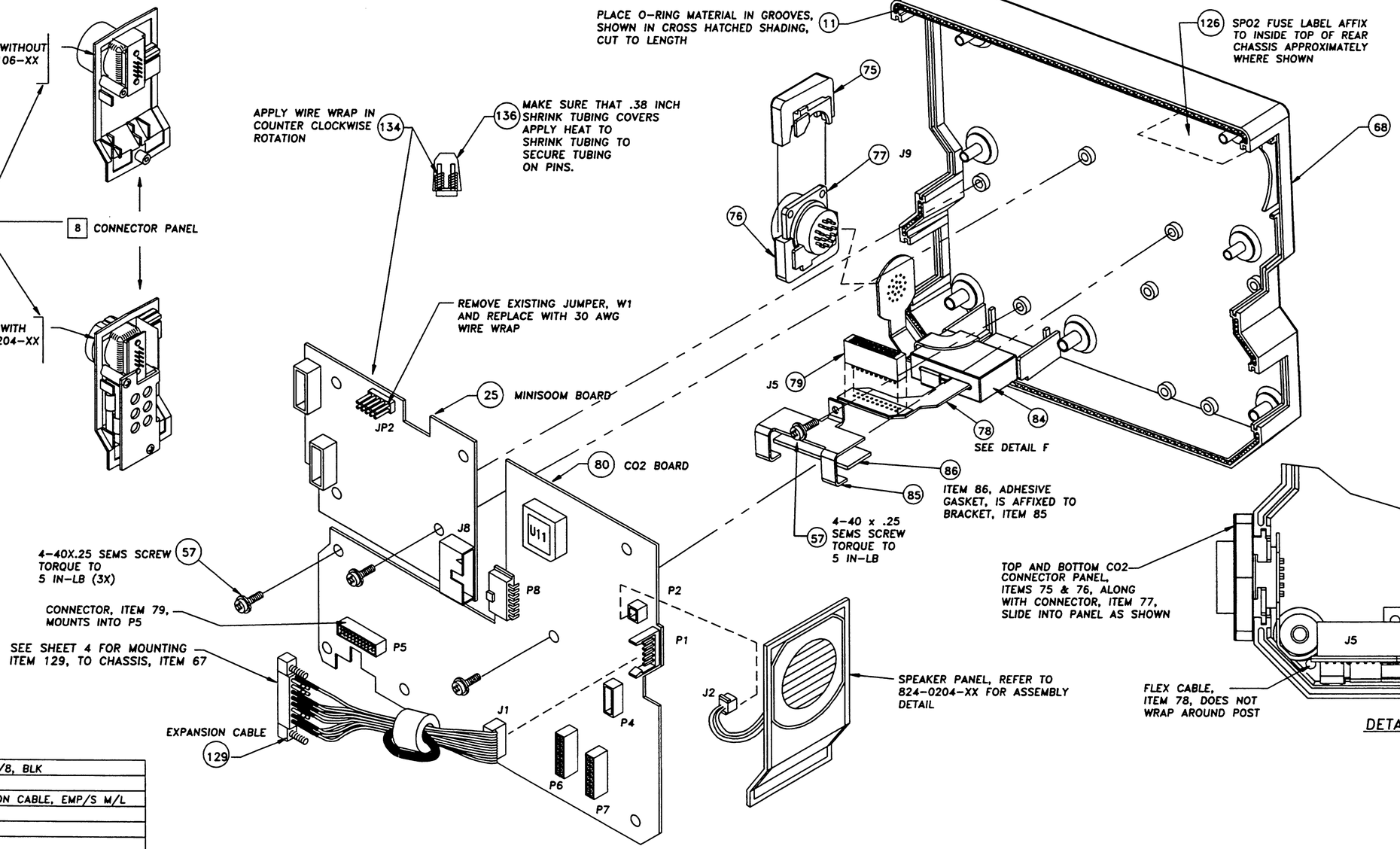

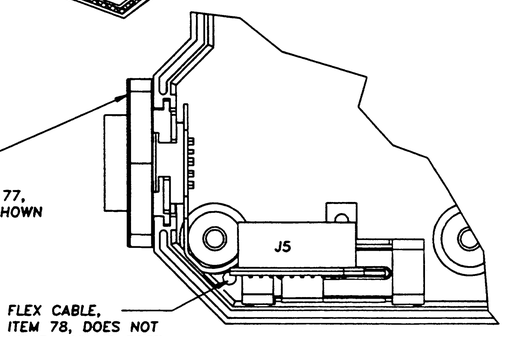

DETAIL F

ITEM	DESCRIPTION
136	TUBING, SHRINK, 1/8, BLK
134	WIRE WRAP
129	SUBASSY, EXPANSION CABLE, EMP/S M/L
126	LABEL, SPO2 FUSE
86	GASKET, BRACKET
85	BRACKET, BEAD
84	FERRITE BEAD
80	CO2 BOARD
79	CONNECTOR, 20 POS.
78	CABLE, FLEX
77	CONNECTOR, NICOLAY
76	CONN. PANEL - BOTTOM
75	CONN. PANEL - TOP
68	PANEL, REAR CHASSIS, RECORDER
57	SCREW, 4-40X.25", PHL, PHD, SEMS
25	MINISOOM BOARD
11	"O"-RING

LIST OF MATERIALS

PRINTERLESS
SPO2/CO2 OPTION

DRAWING NO. 824-0208-00 REV. J

SIZE D | DRAWING NO. 824-0208-00 | REV. J
SCALE: NONE | SHEET 8 OF 9

DO NOT SCALE DRAWING

Figure 7-41

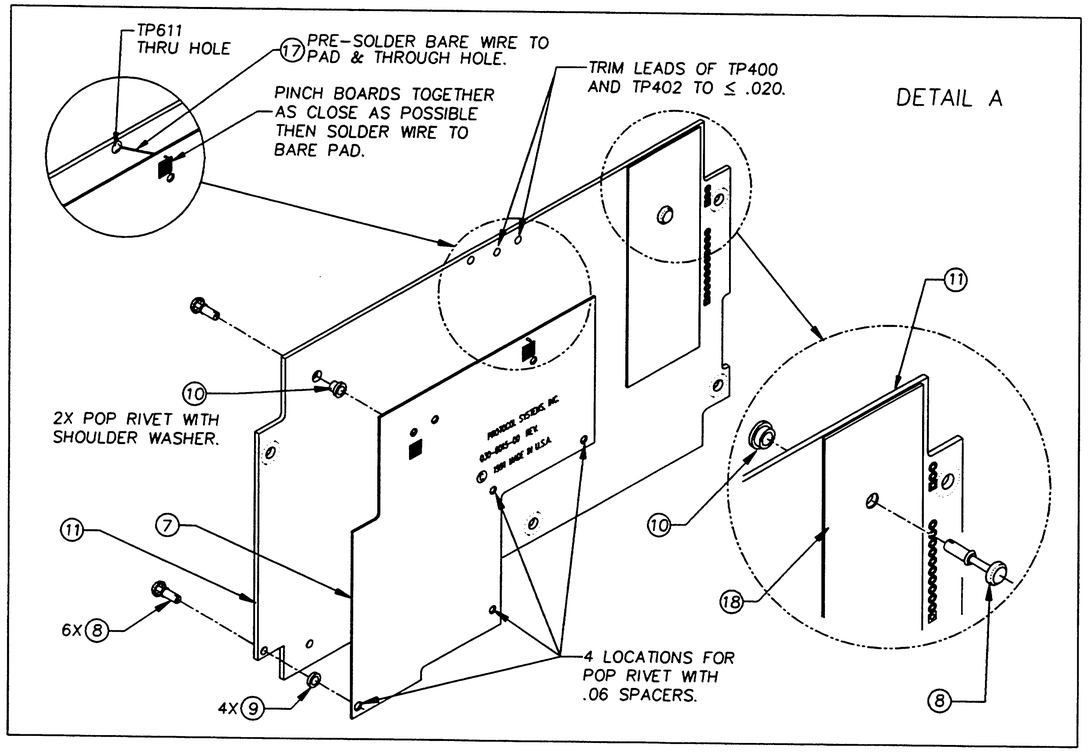

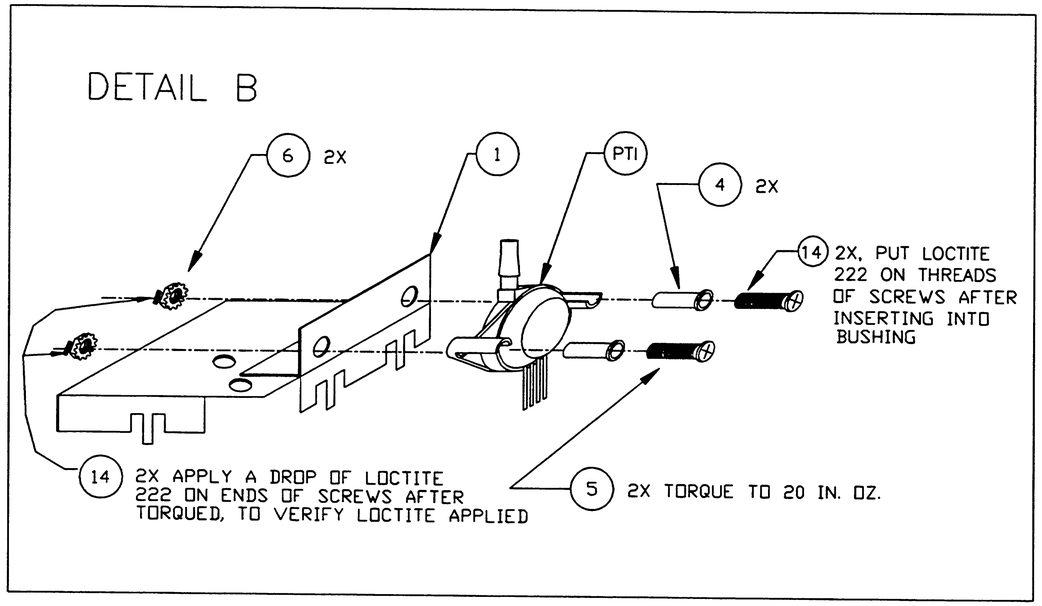

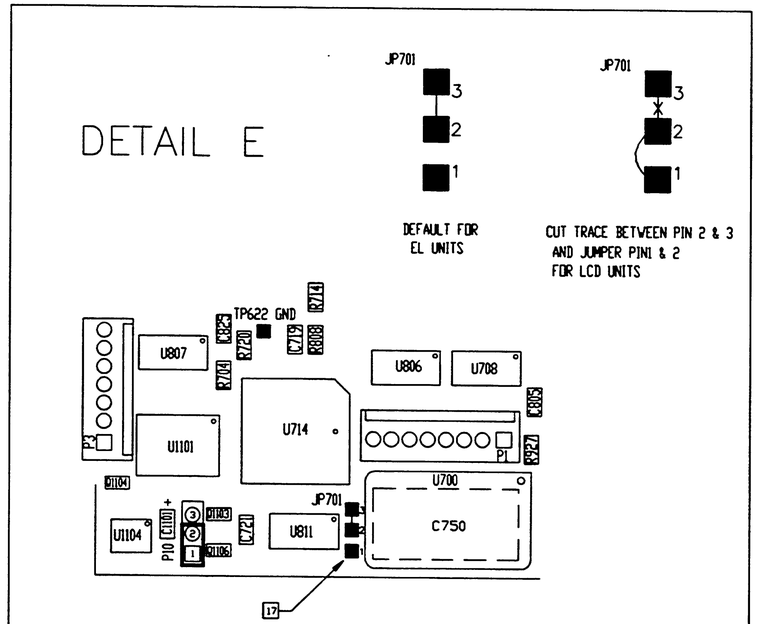

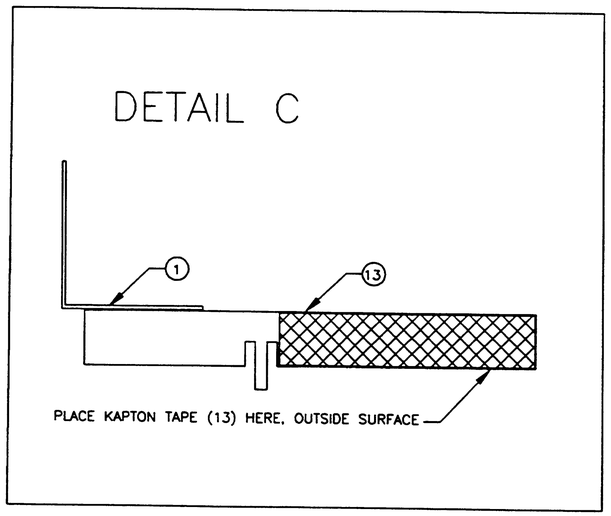

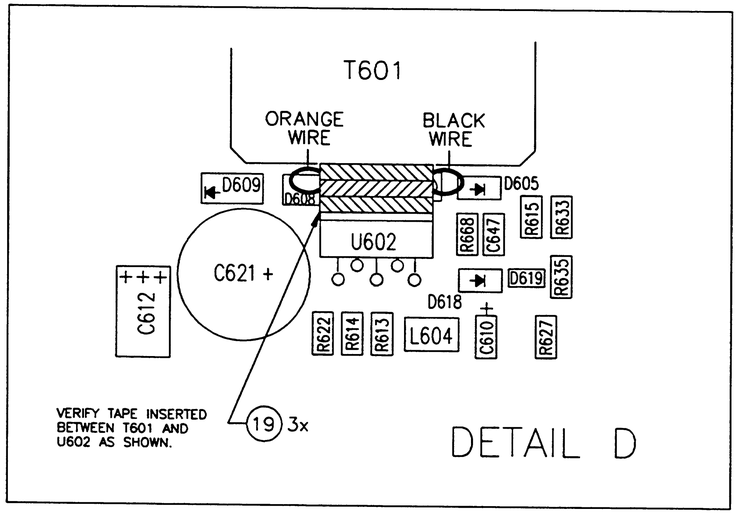

DRAWING NO. 824-0211-01 REV. F

SIZE	DRAWING NO.	REV.
D	824-0211-01	F
SCALE: NONE	SHEET 4 OF 4	

DO NOT SCALE DRAWING

Figure 7-42

DETAIL A

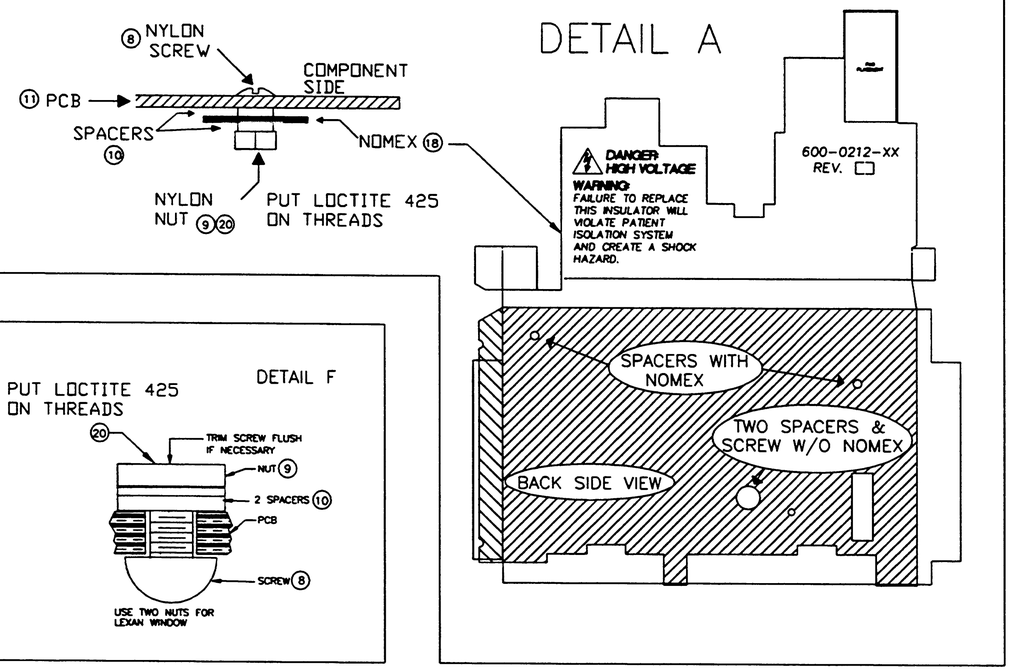

DETAIL C

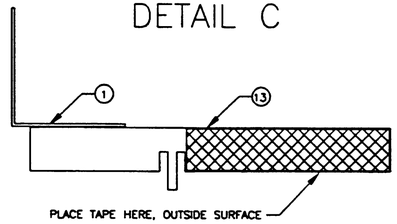

DETAIL F

DETAIL B

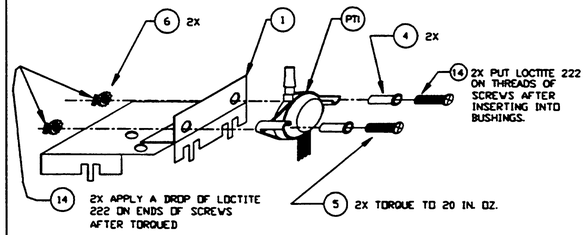

DETAIL E

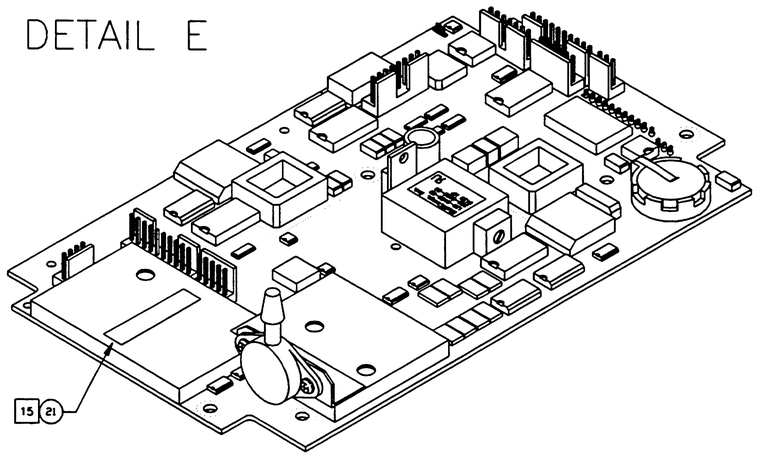

DETAIL G

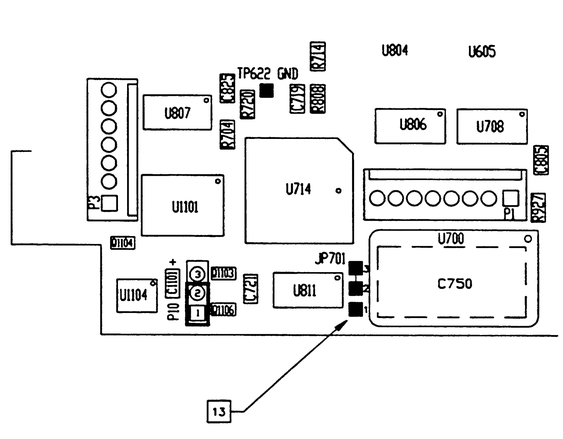

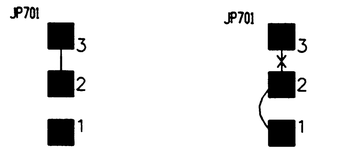

DRAWING NO. 824-0218-00 REV. G

SIZE	DRAWING NO.	REV.
D	824-0218-00	G
SCALE: NONE	SHEET 4 OF 4	

DO NOT SCALE DRAWING

Figure 7-43

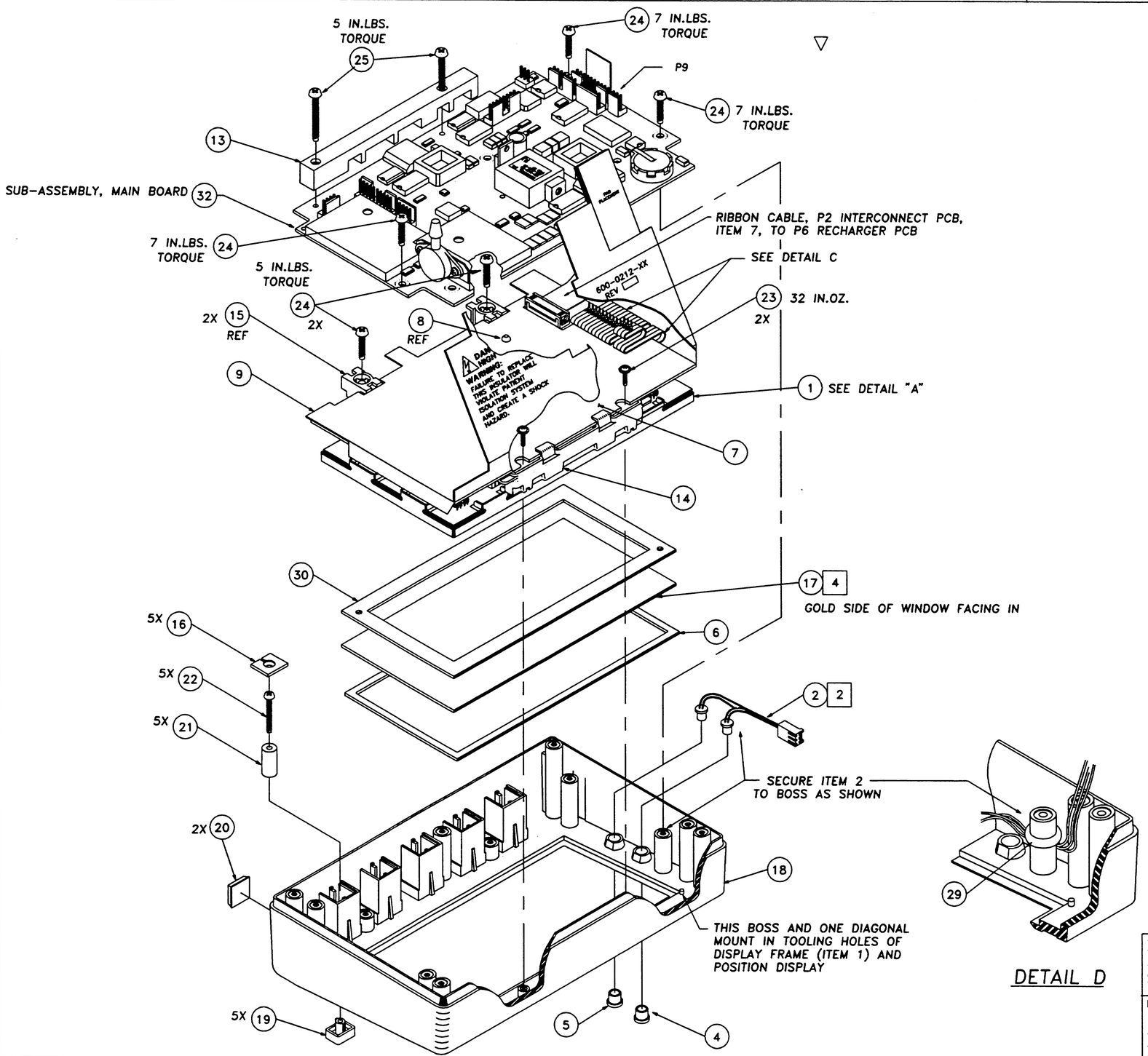

REVISIONS			
REV	NPI/CHANGE ORDER NUMBER	DRAWN BY	CHECKED BY
A	CO 920142	JRO 4/14/92	CLG 4/14/92
B	CO 930283	CLG 6/28/93	

NOTE:

1. THIS ASSEMBLY DRAWING HAS A DRAWING DESIGNATOR "DI".
2. AFTER FRONT CHASSIS IS ASSEMBLED, PLUG THE CONNECTOR FROM LED CABLE, ITEM 2, TO P9 OF MAIN BOARD, ITEM 32.
3. COMPLETE PAPERWORK AND PLACE ASSEMBLY IN AN ANTISTATIC BAG.
4. CAUTION: REAR SURFACE OF WINDOW IS EXTREMELY FRAGILE AND WILL SCRATCH EASILY. HANDLE THIS PART WITH COTTON GLOVES.
5. TORQUE TOLERANCES ARE ±5%.

ITEM	DESCRIPTION	TORQUE
37	HEADER, 26-PIN	
32	SUB-ASSEMBLY, MAIN BOARD	
31	24 AWG BARE COPPER WIRE	
30	GASKET, ELECTRICALLY CONDUCTIVE SILICONE	
29	"O"-RING, .303 ID., .070 THICK	
25	SCREW, 6-32 X 1.0 PHL PHD	5 IN.LBS.
24	SCREW, 6-32 X .50 PHL PHD	5&7 IN.LBS.
23	SCREW, 2-56 X .38 PHL PHD SEMS	32 IN.OZ.
22	SCREW, 4-24 X .88 PHL PHD	32 IN.OZ.
21	STANDOFF, .63 LONG, NYLON	
20	FOOT PAD, .50 SQ, WHITE	
19	KEY CAP, GREY	
18	EL FRONT PANEL	
17	WINDOW	
16	KEY, ELASTOMERIC	
15	CLAMP, EL/LCD, BOTTOM	
14	CLAMP, EL/LCD, TOP	
13	BRACE, PCB	
9	SHIELD, NOMEX	
8	RIVET, SNAP, .039 - .079 CLAMP THICKNESS	
7	SUB-ASSEMBLY, EL MAIN INTERCONN PCB	
6	GASKET, WINDOW	
5	LENS, LED, AMBER	
4	LENS, LED, RED	
2	WIRE HARNESS, ALARM LED	
1	SUB-ASSEMBLY, EL DISPLAY	
	PARTS LIST (SEE BOM FOR PART NUMBERS)	

This drawing may contain information which is the proprietary property of PROTOCOL SYSTEMS, Inc. This drawing is received in confidence and it's contents may not be disclosed without the prior written consent of PROTOCOL SYSTEMS, Inc.

DIMENSIONS ARE IN INCHES
TOLERANCES ARE:
.XXX = ±
.XX = ± NONE
ANGLES = ±

PROTOCOL® SYSTEMS, INC. BEAVERTON, OR 97005

DWN BY: 4/14/92	J.OWEN	DRAWING TITLE: ASSEMBLY DRAWING, PROPAQ EL FRONT PANEL, M/L
CHK BY: 4/14/92	C.GRICE	
ENGR. APVD: 4/20/92	J.SANELLE	SIZE D; DRAWING NO. 824-0226-00; REV B
Q.A. APVD: 4/17/92	C.JACKSON	
MFG. APVD: 4/27/92	G.KERSEY	SCALE: NONE; SHEET 1 OF 2

DO NOT SCALE DRAWING

DRAWING 824-0226-00 REV B

Figure 7-44

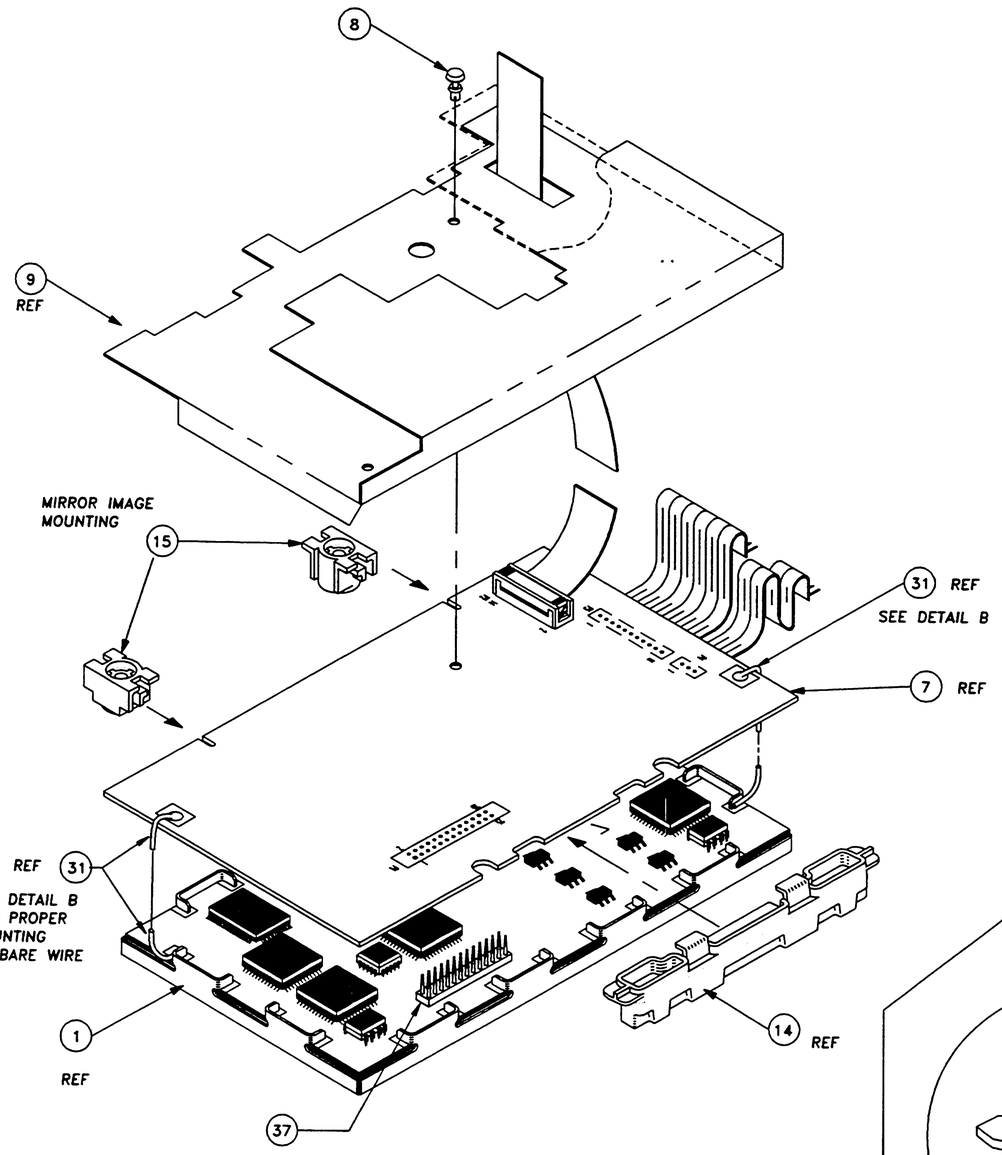

DETAIL A

DETAIL IS SHOWN WITHOUT THE NOMEX SHIELD, ITEM 9, FOR CLARITY. NOMEX SHIELD MUST BE INSTALLED BEFORE MAIN PCB AND INTERCONNECT PCB ARE ATTACHED.

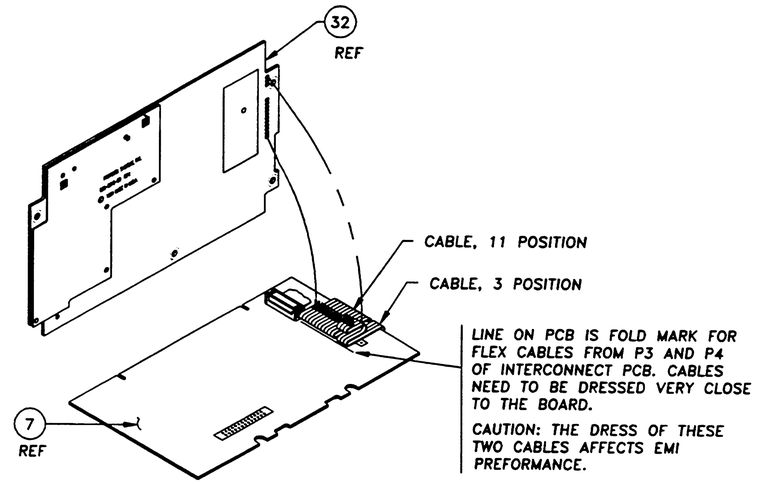

DETAIL C

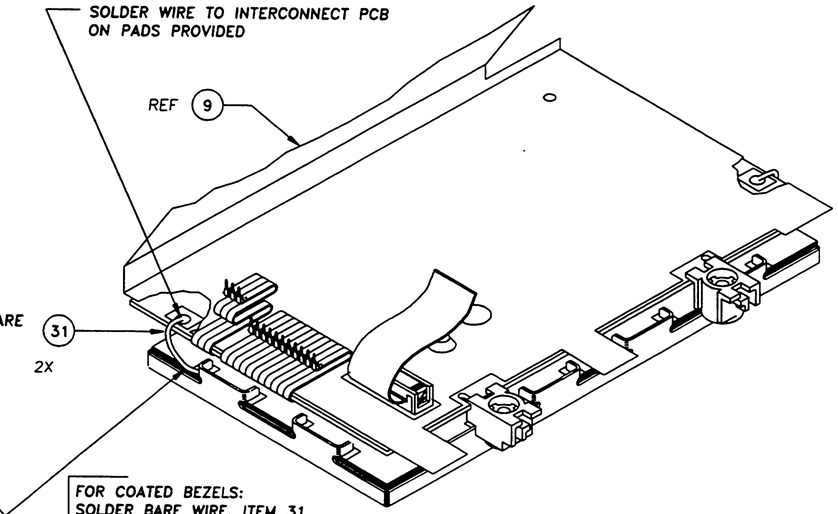

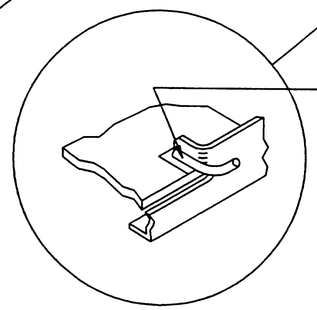

FOR COATED BEZELS:
SOLDER BARE WIRE, ITEM 31, TO BENT FLANGE AND SOLDER PAD UNDER FLANGE USING A HIGH WATT SOLDERING IRON. A SOLDERED CONNECTION TO PAD ALONE IS NOT ACCEPTABLE.

FOR UNCOATED STAINLESS STEEL BEZELS:
SOLDER BARE WIRE, ITEM 31, TO SOLDER PAD AS SHOWN.

CAUTION: THE QUALITY OF THESE JOINTS AFFECTS EMI AND ESD PREFORMANCE.

DETAIL B

THE CLAMPS, ITEMS 14 AND 15, THE EL DISPLAY, ITEM 1, AND THE INTERCONNECT PCB, ITEM 7, MUST BE MOUNTED BEFORE THE COPPER WIRES ARE SOLDERED TO THE DISPLAY AND INTERCONNECT PCB. THE NOMEX SHIELD, ITEM 9, CAN BE ATTACHED AFTER THE WIRES ARE SOLDERED.

THE OTHER COPPER WIRE SHOWN IN DETAIL A IS MOUNTED THE SAME AS SHOWN IN DETAIL B.

SIZE	DRAWING NO.	REV.
D	824-0226-00	B
SCALE: NONE	SHEET 2 OF 2	

DRAWING NO. 824-0226-00 REV. B

DO NOT SCALE DRAWING

Figure 7-45

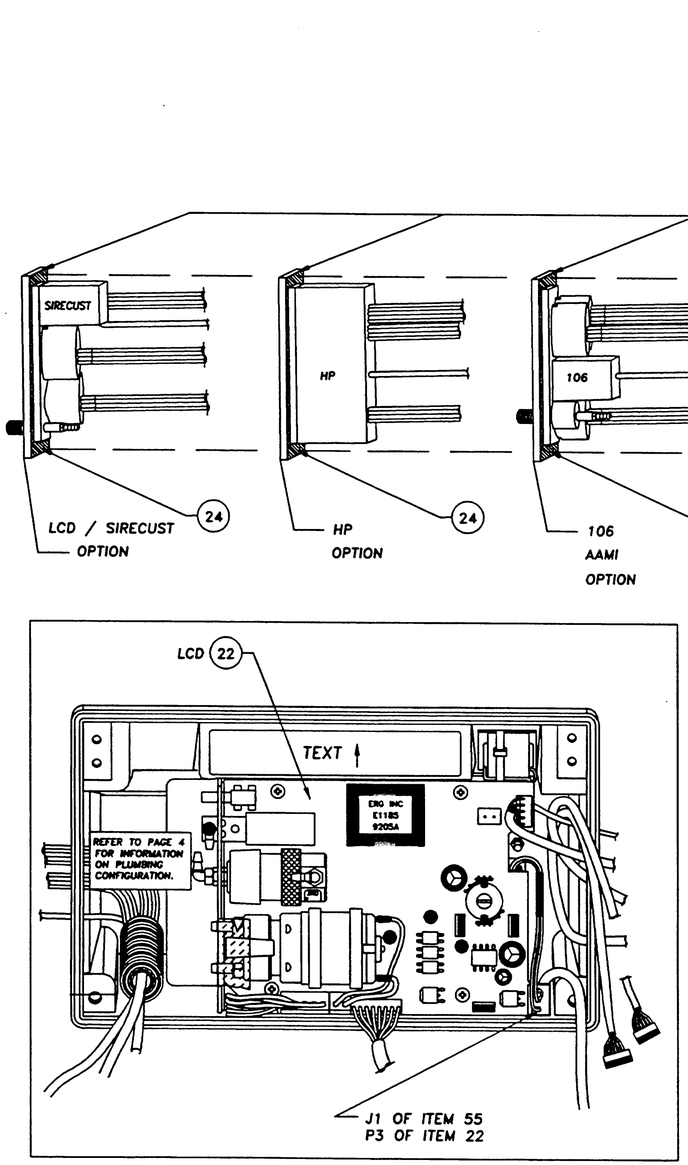

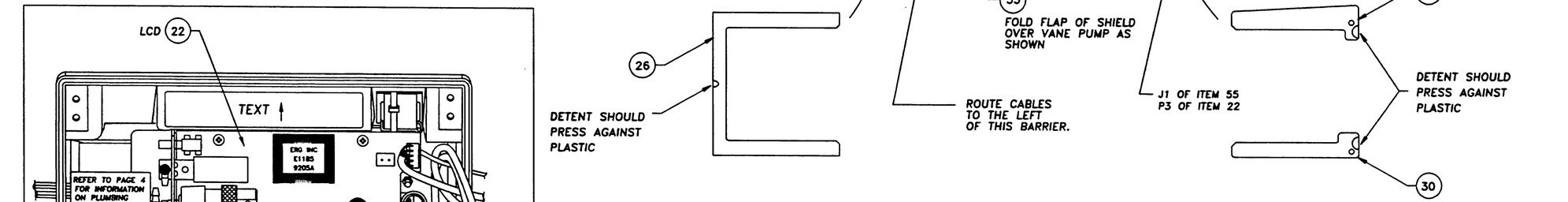

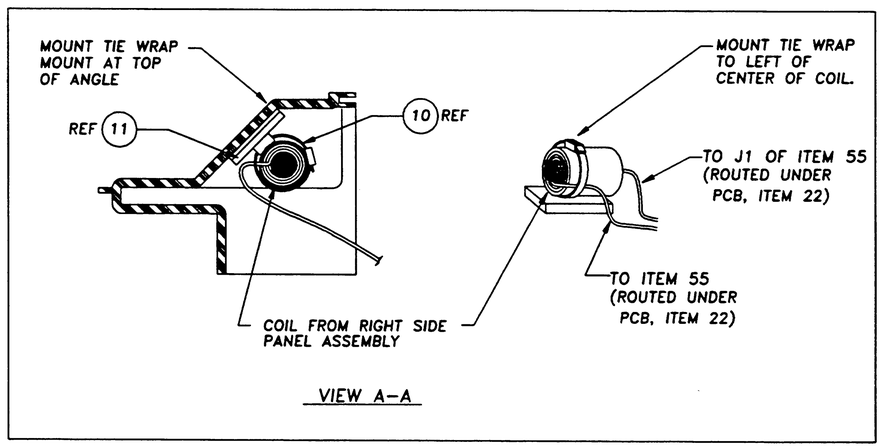

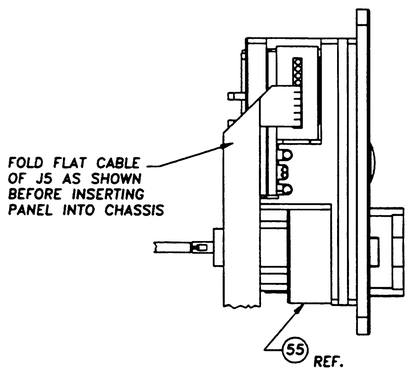

TOP VIEW OF RIGHT SIDE PANEL
WITH DEFIB SYNC
AND WITH/WITHOUT UNIV.
POWER ADAPTER CONN.

ITEM	QTY	DESCRIPTION	TORQUE
56	1	LEFT SIDE PANEL	
55	1	RIGHT SIDE PANEL	
53	1	SHIELD, FRP PAPER	
31	1	CLAMP, RIGHT SIDE PANEL, TOP	
30	1	CLAMP, RIGHT SIDE PANEL, BOTTOM	
27	4	SCREW, 4-40 X 3/8"	4 IN.LBS.
26	1	CLAMP, SIDE PANEL	
24	2	ADHESIVE, PREFORM-SIDE PANEL	
22	1	RECHARGER BOARD	
10	1	CABLE TIE, 7"	

PARTS LIST (SEE BOM FOR PART NUMBERS)

SIZE	DRAWING NO.	REV.
D	824-0230-00	E
SCALE: NONE	SHEET 3 OF 5	

DO NOT SCALE DRAWING

DRAWING NO. 824-0230-00 REV. E

Figure 7-46

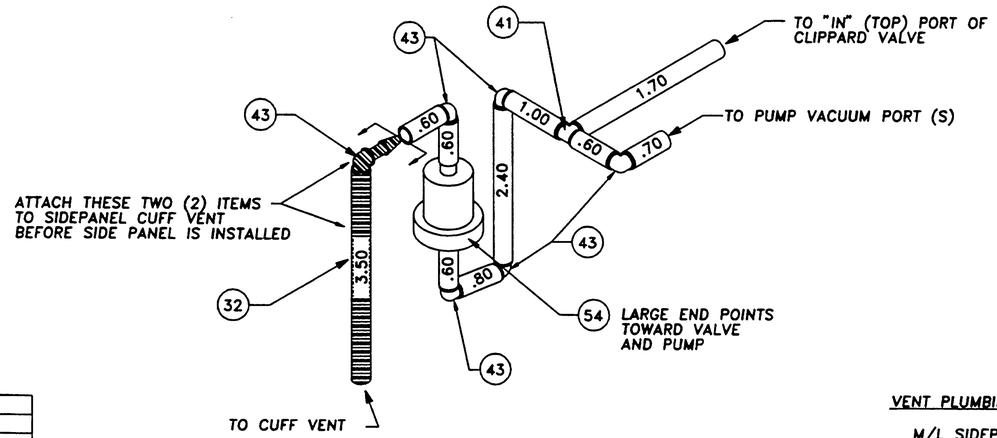

ITEM	QTY	DESCRIPTION
54	1	FILTER
43	6	ELBOW, 3/32 ID
41	1	TEE, 3/32 ID
32	A/R	TUBING, .104 ID, .192 OD, SILICONE

PARTS LIST (SEE BOM FOR PART NUMBERS)

VENT PLUMBING FOR 102/104/106

M/L SIDEPANEL OPTION

NOTE: LENGTH OF TUBING IS ±.10

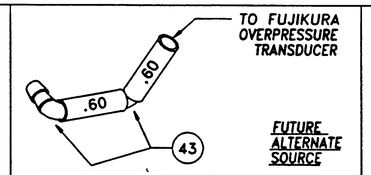

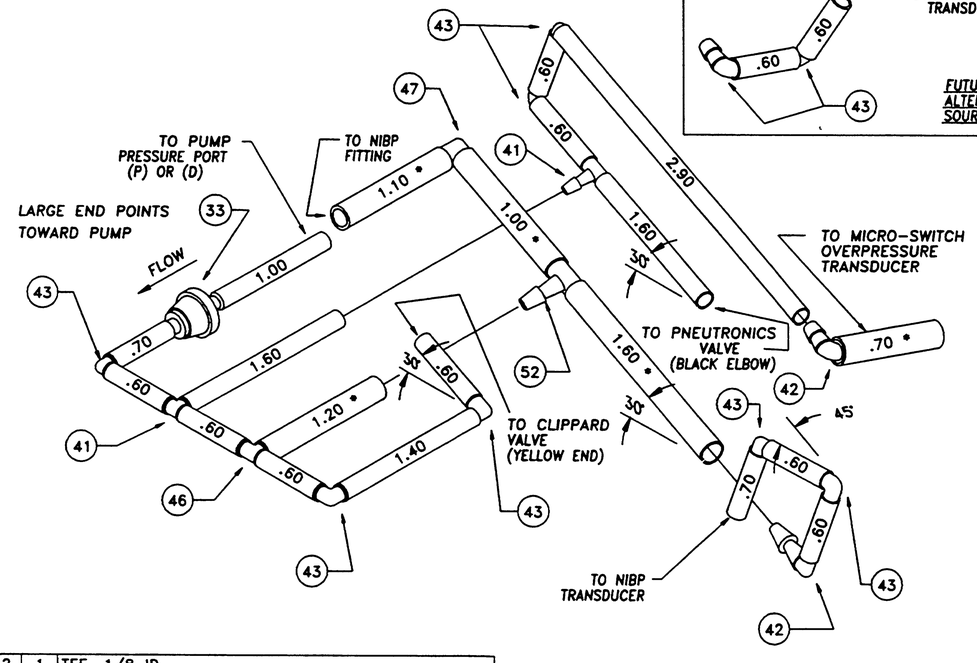

ITEM	QTY	DESCRIPTION
52	1	TEE, 1/8 ID
47	1	ELBOW, 1/8 ID
46	1	TEE, 3/32 ID (2), 1/8 ID STEM
43	7	ELBOW, 3/32 ID
42	2	ELBOW, 3/32 ID, AND 1/8 ID
41	2	TEE, 3/32 ID
40	A/R	TUBING, .125 ID, .250 OD, SILICONE
33	1	CHECK VALVE
32	A/R	TUBING, .104 ID, .192 OD, SILICONE

PARTS LIST (SEE BOM FOR PART NUMBERS)

CUFF PLUMBING FOR 106

M/L SIDEPANEL OPTION

NOTE: LENGTH OF TUBING IS ±.10.

"*" DESIGNATES 1/8" TUBING, ITEM 40.

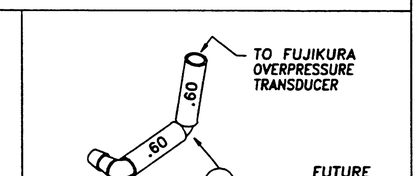

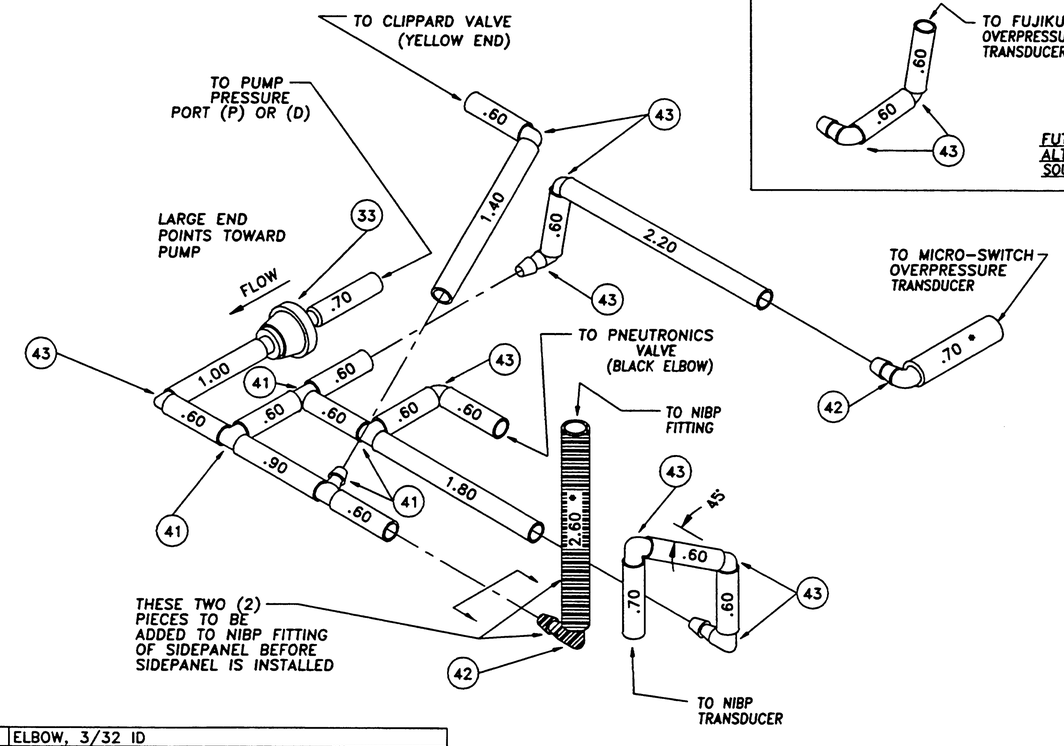

ITEM	QTY	DESCRIPTION
43	8	ELBOW, 3/32 ID
42	2	ELBOW, 3/32 ID, 1/8 ID
41	4	TEE, 3/32 ID
40	A/R	TUBING, .125 ID, .250 OD, SILICONE
33	1	CHECK VALVE
32	A/R	TUBING, .104 ID, .192 OD, SILICONE

PARTS LIST (SEE BOM FOR PART NUMBERS)

CUFF PLUMBING FOR 102/104

AAMI SIDEPANEL OPTION

NOTE: LENGTH OF TUBING IS ±.10

"*" DESIGNATES 1/8" TUBING, ITEM 40.

DO NOT SCALE DRAWING

SIZE	DRAWING NO.	REV.
D	824-0230-00	E
SCALE: NONE	SHEET 4 OF 5	

DRAWING NO. 824-0230-00 REV. E

Figure 7-47

VENT PLUMBING FOR SIRECUST M/L SIDEPANEL OPTION

NOTE: LENGTH OF TUBING IS ±.10

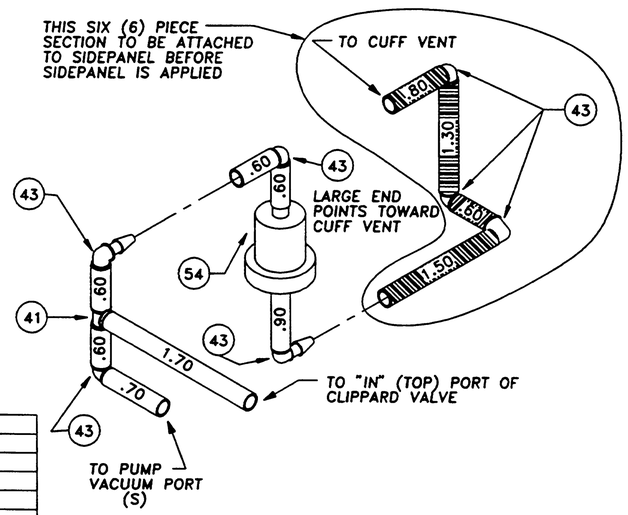

ITEM	QTY	DESCRIPTION
54	1	FILTER
43	7	3/32" ID ELBOW FITTING
41	1	3/32" ID TEE FITTING
32	A/R	3/32" ID TUBING

PARTS LIST (SEE BOM FOR PART NUMBERS)

VENT PLUMBING FOR HP M/L SIDEPANEL OPTION

NOTE: LENGTH OF TUBING IS ±.10
"•" DESIGNATES 1/8" TUBING, ITEM 40.

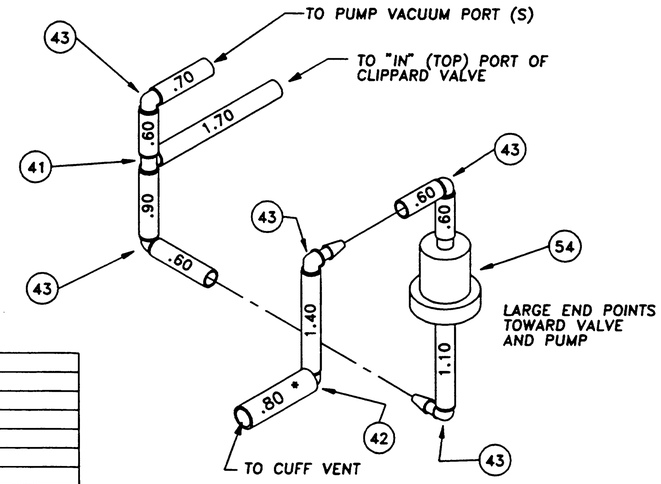

ITEM	QTY	DESCRIPTION
54	1	FILTER
43	5	3/32" ID ELBOW FITTING
42	1	3/32" ID TO 1/8" ELBOW FITTING
41	1	3/32" ID TEE FITTING
40	A/R	1/8" ID TUBING
32	A/R	3/32" ID TUBING

PARTS LIST (SEE BOM FOR PART NUMBERS)

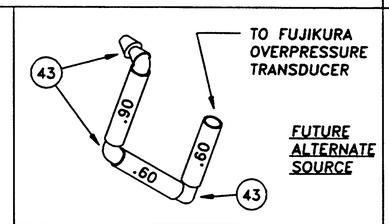

FUTURE ALTERNATE SOURCE

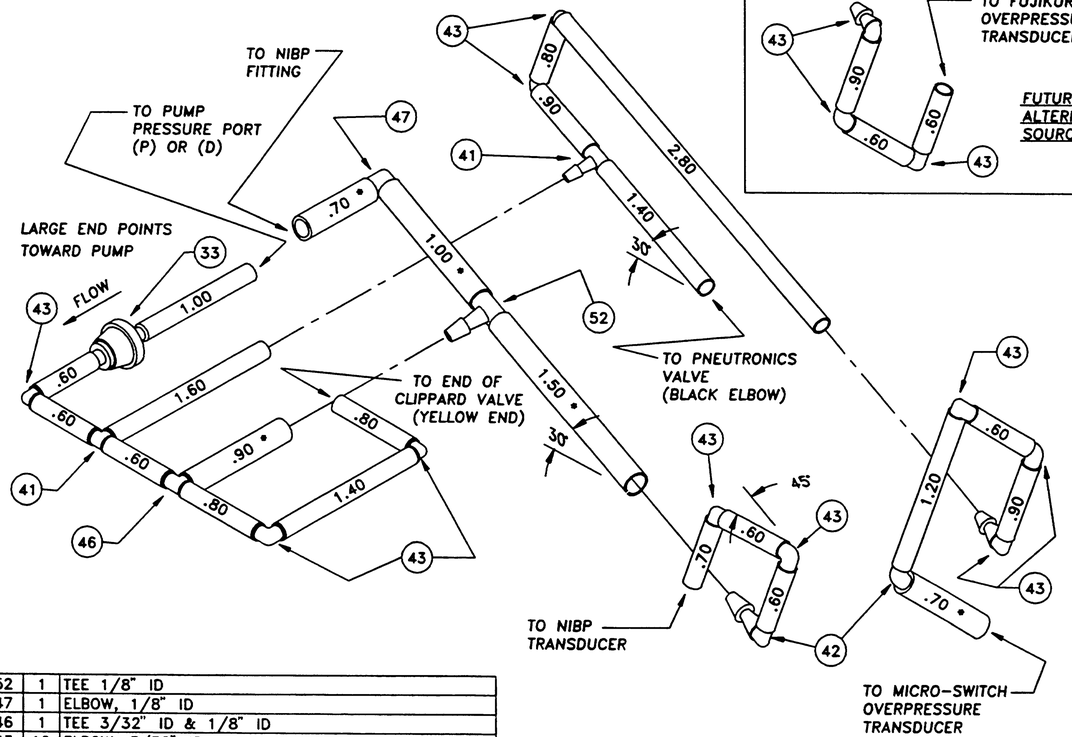

ITEM	QTY	DESCRIPTION
52	1	TEE 1/8" ID
47	1	ELBOW, 1/8" ID
46	1	TEE 3/32" ID & 1/8" ID
43	10	ELBOW, 3/32" ID
42	2	ELBOW, 3/32" ID & 1/8" ID
41	2	TEE 3/32" ID
40	A/R	TUBING 1/8" ID
33	1	CHECK VALVE
32	A/R	TUBING 3/32" ID

PARTS LIST (SEE BOM FOR PART NUMBERS)

CUFF PLUMBING FOR SIRECUST M/L SIDEPANEL OPTION

NOTE: LENGTH OF TUBING IS ±.10
"•" DESIGNATES 1/8" TUBING, ITEM 40.

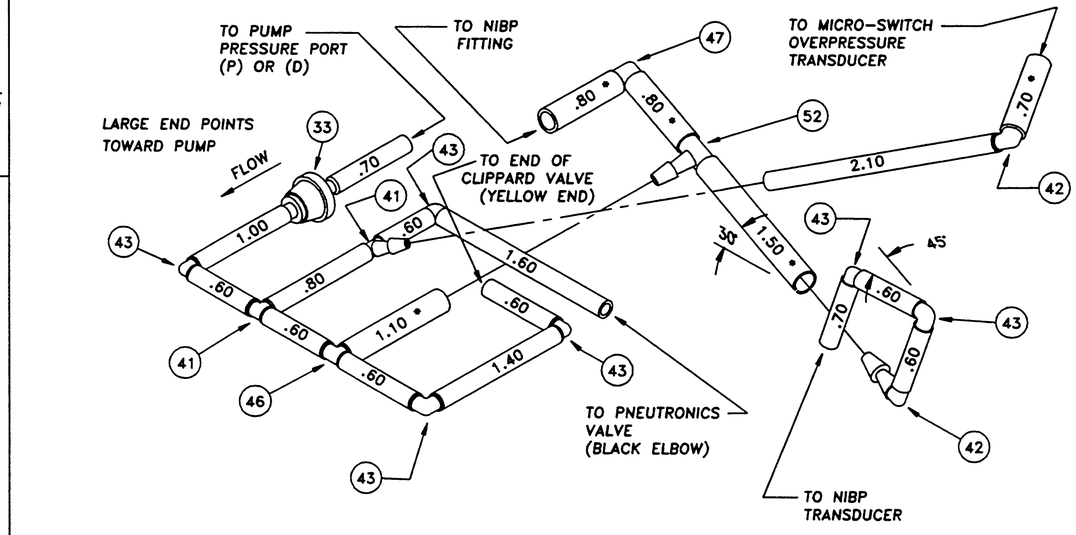

CUFF PLUMBING FOR HP M/L SIDEPANEL OPTION

NOTE: LENGTH OF TUBING IS ±.10
"•" DESIGNATES 1/8" TUBING, ITEM 40.

ITEM	QTY	DESCRIPTION
52	1	TEE 1/8" ID
47	1	ELBOW, 1/8" ID
46	1	TEE 3/32" ID & 1/8" ID
43	6	ELBOW, 3/32" ID
42	2	ELBOW, 3/32" ID & 1/8" ID
41	2	TEE 3/32" ID
40	A/R	TUBING 1/8" ID
33	1	CHECK VALVE
32	A/R	TUBING 3/32" ID

PARTS LIST (SEE BOM FOR PART NUMBERS)

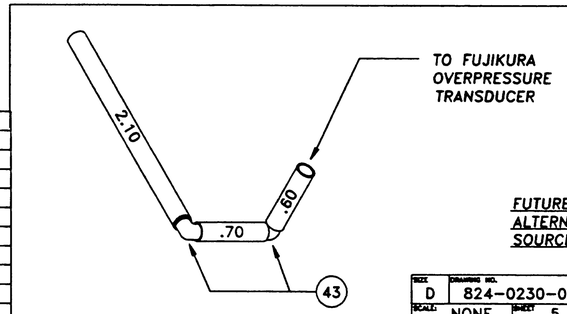

FUTURE ALTERNATE SOURCE

DRAWING NO. 824-0230-00 REV. E

SIZE	DRAWING NO.	REV.
D	824-0230-00	E
SCALE: NONE	SHEET 5 OF 5	

DO NOT SCALE DRAWING

Figure 7-48

FILE COPY

REVISIONS			
REV.	CHANGE ORDER NUMBER	DRAFTED BY	CHECKED BY
E	CO 930283	CLG 6/28/93	CLG 7/1/93
F	CO 930116	JRO 10/18/93	[illegible] 10-18-93

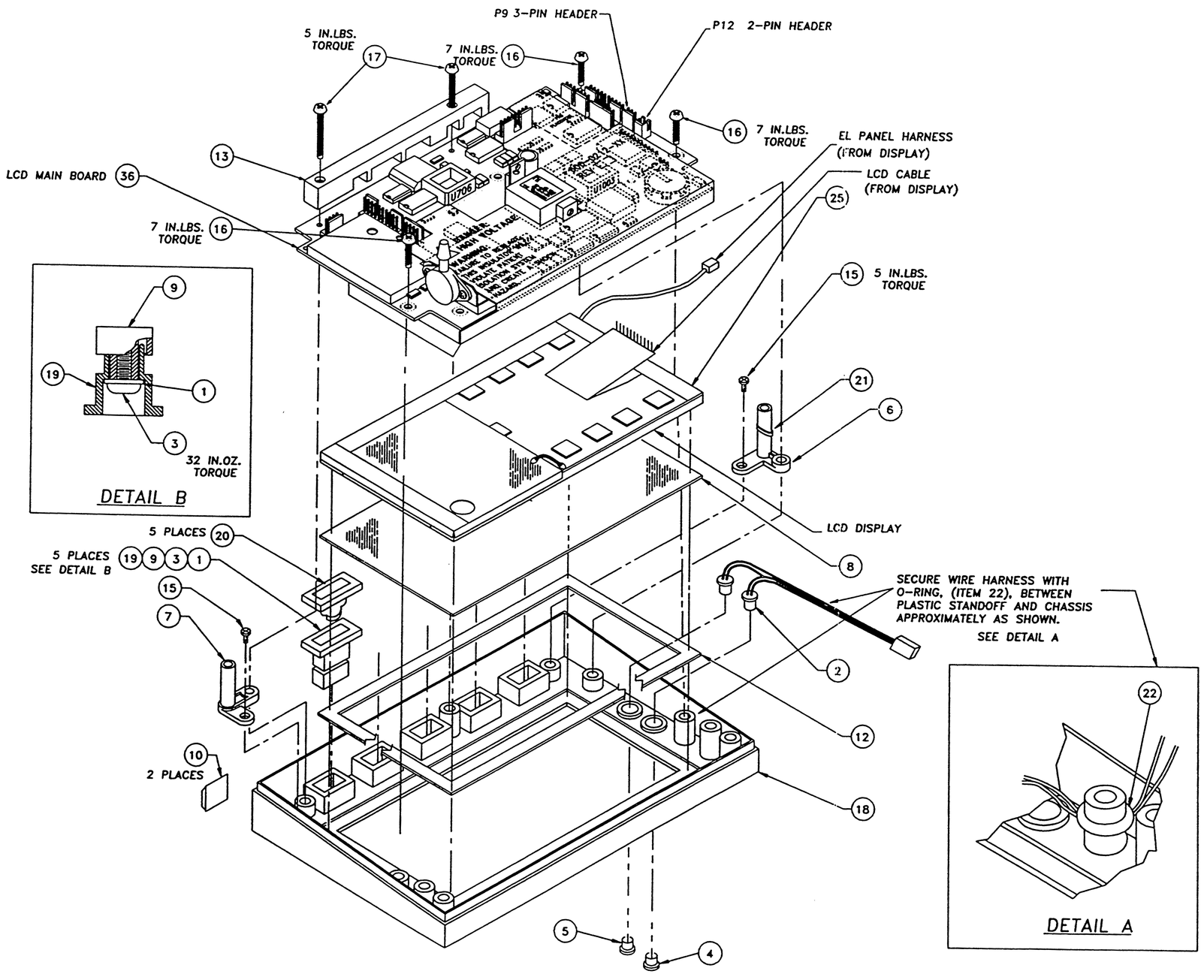

NOTES:

1. THIS DRAWING HAS A DRAWING DESIGNATOR "DJ".
8. TORQUE TOLERANCES ARE ±5%.

ITEM	DESCRIPTION	TORQUE
36	SUB-ASSEMBLY, MAIN BOARD	
25	INSULATION, STRIP BEZEL	
22	O-RING	
21	TIE WRAP	
20	KEY, ELASTOMERIC	
19	KEY ADAPTER	
18	PLASTIC MOLDED PART, DRESS PANEL	
17	SCREW, 6-32 X 1.0, PH, PH, SS	5 IN.LBS
16	SCREW, 6-32 X .50, PH, PH, SS	7 IN.LBS
15	SCREW, 6-32 X .25, PH, PH, SS	5 IN.LBS
13	BRACE, PBA	
12	ADHESIVE PREFORM, WINDOW	
10	FOOT PAD, 1/2 INCH SQUARE, WHITE	
9	KEY CAP	
8	WINDOW, DRESS PANEL	
7	LEFT PANEL BRACKET	
6	RIGHT PANEL BRACKET	
5	LENS, LED, AMBER	
4	LENS, LED, RED	
3	4-24 X .25 SCREW	32 IN.OZ
2	WIRE HARNESS, ALARM LED	
1	#4 WASHER	

PARTS LIST (SEE BOM FOR PART NUMBERS)

This drawing may contain information which is the proprietary property of PROTOCOL SYSTEMS, Inc. This drawing is resolved in confidence and it's contents may not be disclosed without the prior written consent of PROTOCOL SYSTEMS, Inc.

TOLERANCES: DIMENSIONS ARE IN INCHES .XXX = ± .XX = ± ANGLES = ±

PROTOCOL SYSTEMS, INC. BEAVERTON, OR 97005

DWN. BY 4/14/93	J.OWEN	ASSEMBLY DWG, FRONT CHASSIS, LCD MONITOR
CHK. BY 4/28/93	L.RICHARDS	
ENGR. APPR. 4/28/93	J.SANELLE	SIZE D · DRAWING NO. 824-0227-00 · REV. F
Q.A. APPR. 4/17/93	C.JACKSON	
MFG. APPR. 4/22/93	G.KERSEY	SCALE NONE · SHEET 1 OF 3

DO NOT SCALE DRAWING

DRAWING NO. 824-0227-00 REV. F

Fig. 7-49

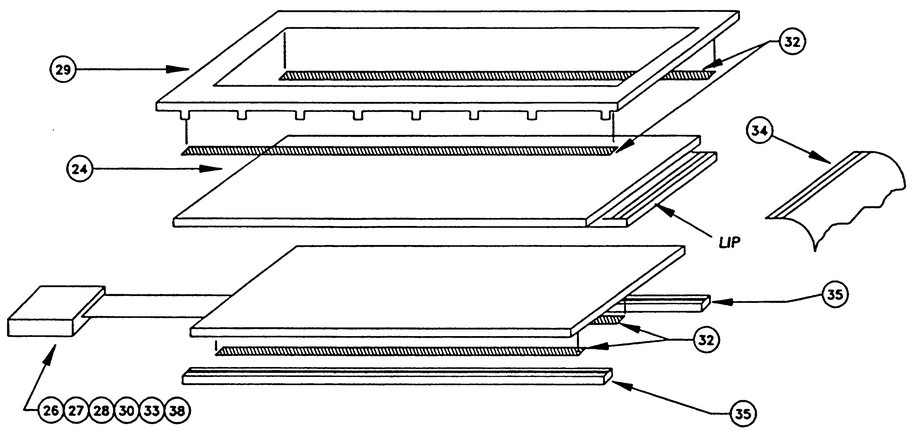

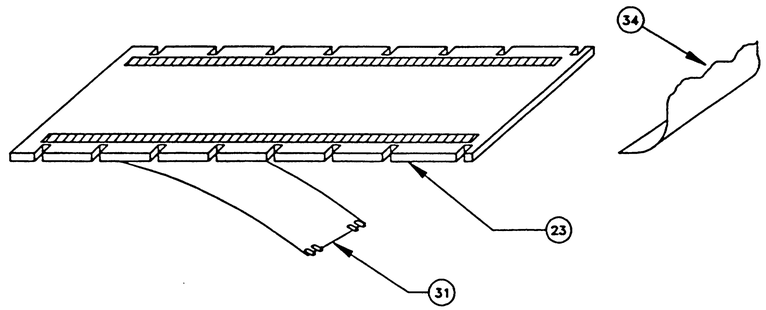

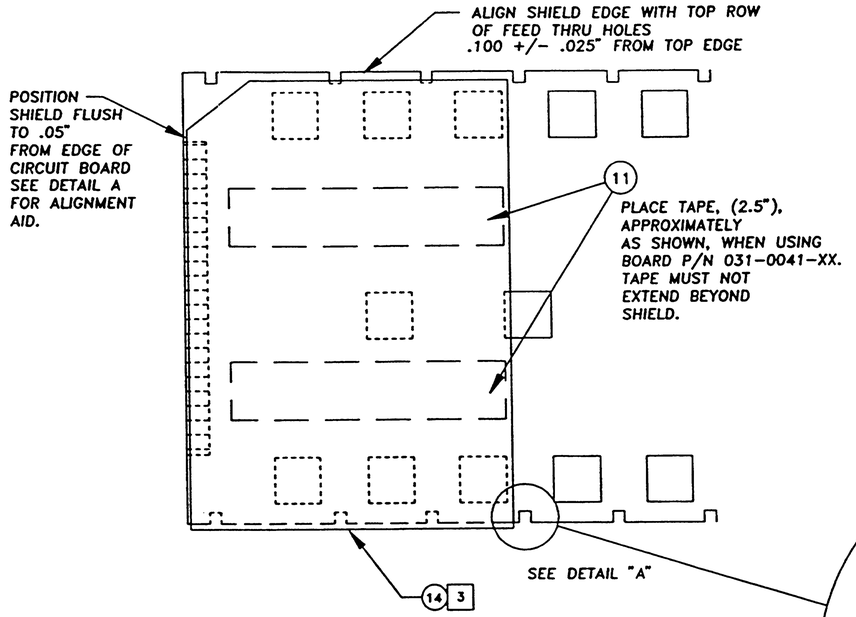

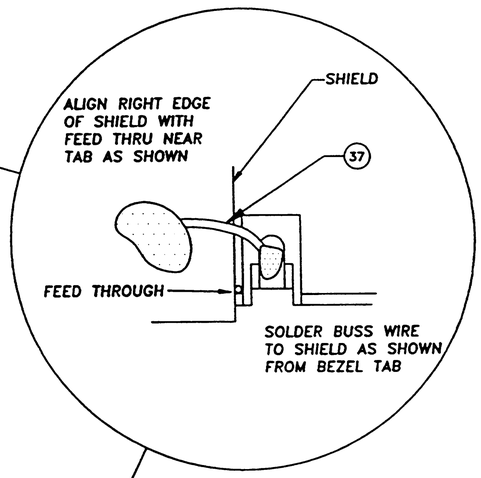

DETAIL "A"

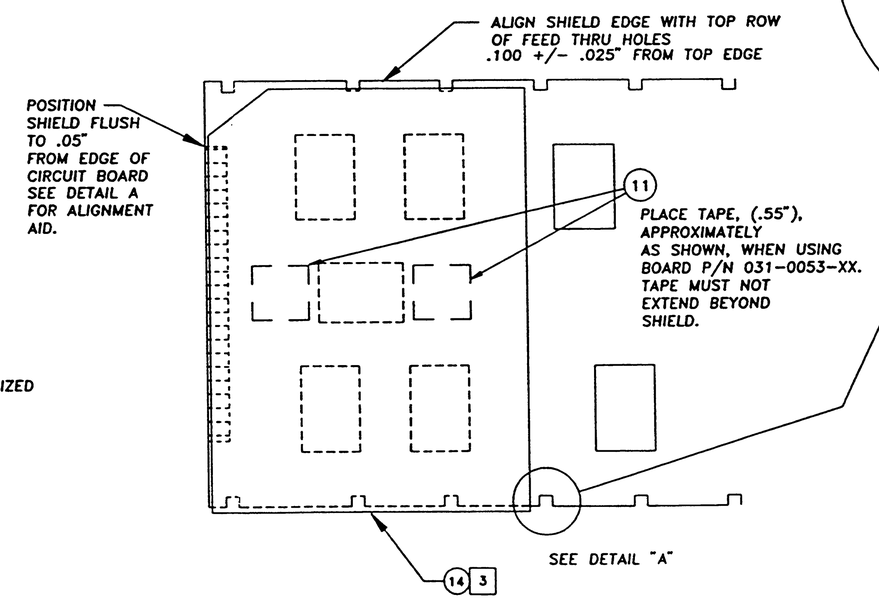

ITEM	DESCRIPTION
38	3/4" BLACK VINYL TAPE
37	WIRE, BUSS, 24 AWG
35	CONNECTOR, ZEBRA STRIP
34	CABLE, HEATSTAKE
33	WIRE, BLACK, 26 AWG
32	ADHESIVE, DOUBLE STICK, 1/4"
31	CABLE, FLAT, LCD 11 PIN
30	WIRE, ORANGE, 26 AWG
29	BEZEL, LCD
28	TUBING, HEATSHRINK, 1/8"
27	CONNECTOR, 2 PIN
26	LAMP, ELECTROLUMINESCENT (EL)
24	PANEL, LCD GLASS
23	PCB, LCD DRIVER
14	SHIELD, COPPER/NOMEX
11	TAPE, FOAM, 3/4 DOUBLE STICK

PARTS LIST (SEE BOM FOR PART NUMBERS)

ADDITIONAL NOTES:

[3.] VENDOR AND MATERIAL MUST BE UL RECOGNIZED

4. TEST EL PANEL FOR FUNCTIONALITY USING TEST FIXTURE, 850-0035-XX.

[5.] TRIM TABS OF EL PANEL APPROXIMATELY AS SHOWN. THE RESULT SHOULD PROVIDE A NOTCH FOR THE SHRINK-TUBING SHAPED SO THAT TUBING WILL NOT PULL OFF ONCE SHRUNK.

6. USE LCD TEST SOFTWARE, IN TEST FIXTURE, 850-0035-XX, FOR PIXEL ALIGNMENT GUIDE

7. BAG LCD ASSEMBLY IN PINK POLY BAG.

SIZE	DRAWING NO.	REV.
D	824-0227-00	F
SCALE: NONE	SHEET 2 OF 3	

DO NOT SCALE DRAWING

Fig. 7-50

WIRING LIST		
ITEM	COLOR	DESTINATION
30	ORANGE	PIN 2
33	BLACK	PIN 1

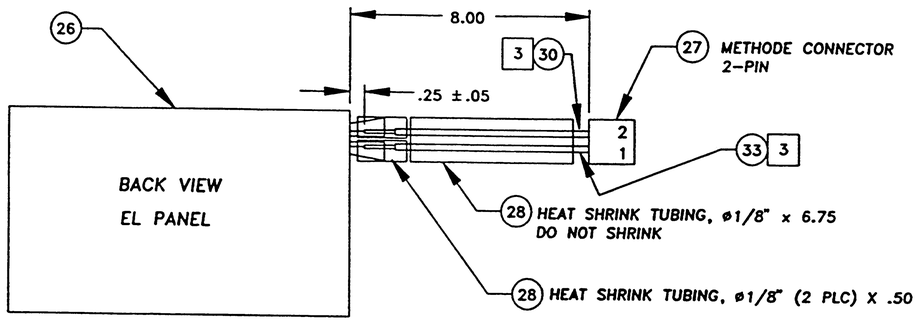

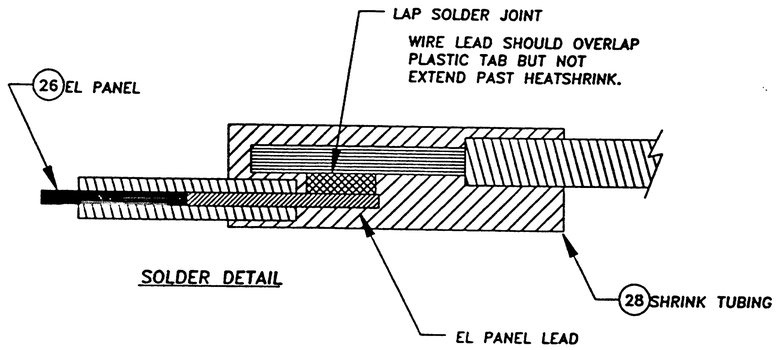

SOLDER DETAIL

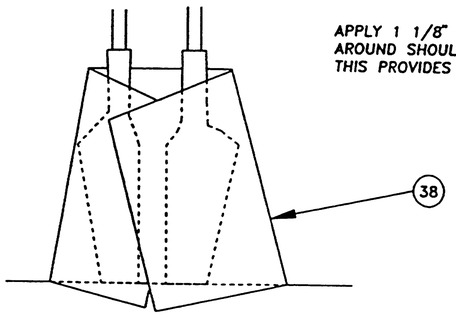

APPLY 1 1/8" PIECE OF BLACK ELECTRICAL TAPE, (ITEM 38), AROUND SHOULDERS OF EL PANEL AS SHOWN BELOW. THIS PROVIDES ADDITIONAL STABILITY TO EL PANEL LEADS.

VIEWED FROM BACK SIDE OF EL PANEL

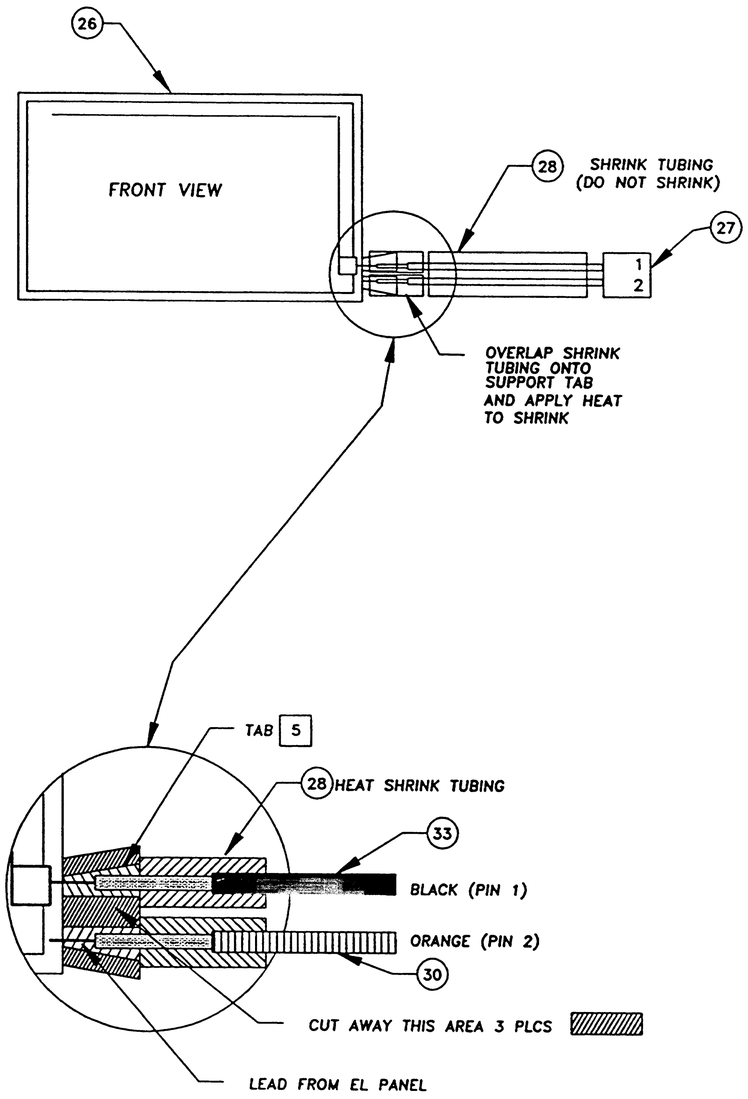

DRAWING NO. 824-0227-00 REV. F

SIZE	DRAWING NO.	REV.
D	824-0227-00	F
SCALE: 1X	SHEET 3 OF 3	

DO NOT SCALE DRAWING

Fig. 7-51

Section 8

Replaceable Parts

Introduction

This section lists the replaceable and servicable parts that you can purchase from Protocol Systems. Table 8-1 lists the replaceable assemblies and related parts in the Propaq series monitors and options.

Replaceable assemblies should be purchased only from Protocol Systems or its authorized service or sales representatives. Software may be purchased only on an exchange basis. Contact Protocol Systems for the current sale price or exchange fee.

For removal and replacement procedures, see Section 5.

Table 8-1. Service Parts, "MX"Serial Number Applicability

Model-Display	Description	Protocol Part Number
Propaq Circuit Boards		
10X-LCD	Main Board, "MB" S.N. Applicable	020-0224-XX
10X-EL	Main Board, "ME" S.N. Applicable	020-0225-XX
10X-LCD	Recharger Board, "MB" S.N. Applicable	020-0226-XX
10X-EL	Recharger Board, "ME" S.N. Applicable	020-0227-XX
Propaq Front/Rear Chassis Assemblies		
10X-LCD	Front Chassis (incl. window), "MB" S.N. Applicable	020-0015-XX
10X-EL	Front Chassis (incl. window), "ME" S.N. Applicable	020-0169-XX
10X-LCD	Display Module, LCD, "MB" S.N. Applicable	020-0046-XX
10X-EL	Display Module, EL	020-0168-XX
All	Rear Chassis	020-0170-XX
10X-LCD	Key Assembly, "MB" S.N. Applicable	020-0030-XX
All	Key Cap (1 only)	630-0033-XX
Propaq Side Panels		
102/104	Left Side Panel, AAMI Connectors	020-0228-XX
106	Left Side Panel, AAMI Connectors	020-0229-XX
10X-HP	Left Side Panel, HP Connectors	020-0230-XX
All	Right Side Panel	020-0171-XX
Propaq NIBP System Components		
All	Air Filter	020-0063-XX
All	Check Valve	020-0064-XX
All	NIBP O-Ring Kit	020-0021-XX
All	Threaded Fitting, Side Panel Mount	020-0035-XX
All	Pump	020-0036-XX
All	Hose Fittings, Plastic Pair, Quick-Disconnect	020-0065-XX
102/104	Plumbing Assy., AAMI Connectors	020-0233-XX
106	Plumbing Assy., AAMI Connectors	020-0234-XX
All	Plumbing Assy., HP Connectors	020-0232-XX
Batteries		
All	Battery Pack, Single	008-0126-XX
All	Battery Pack, Dual (to support Printer and SpO2 options)	008-0125-XX

Table 8-1 (Cont). Service Parts, "MX"Serial Number Applicability

Model-Display	Description	Protocol Part Number
	Expansion Module with Printer (EMP)	
All	Printer Assembly	020-0068-XX
All	Main Chassis	020-0069-XX
10X-LCD	Front Panel	020-0015-XX
10X-EL	Front Panel	020-0169-XX
All	Key Cap (1 only)	630-0033-XX
All	Rear Panel	020-0071-XX
All	Paper Door	020-0074-XX
All	Side Inserts	020-0076-XX
All	Cable, Expansion, P4 to PCP Board, w/Bead	020-0115-XX
All	Cable Assy., Printer, Keypad	020-0114-XX
	SpO2 Option	
All	SpO2 Input Board (SOOM)	031-0008-XX
All	SCP Board	031-0010-XX
All	Chassis, SpO2 for Propaq	020-0122-XX
All	Rear Panel, SpO2 for Propaq	020-0123-XX
All	Mounting Screw Kit	020-0126-XX
All	Speaker Side Panel	020-0125-XX
All	Connector Side Panel w/o Bead	020-0124-XX
All	Connector Side Panel w/Bead (German)	020-0190-XX
All	D-Connector Locking Ring	630-0038-XX
All	Cable, Expansion, P4 to SCP Board, w/Bead	020-0198-XX
All	Cable, Interconnect, SCP to PCP Board	010-0054-XX
	CO2 Option	
All	CO_2 Board (MSP)	020-0286-XX
All	Connector Panel, CO_2	020-0285-XX
All	Right Side Panel, External Fuse (F1), 25 W dc Input	020-0284-XX
All	Right Side Panel, External Fuse (F1), 10.5 W dc Input	020-0283-XX
	Misc. Electrical Parts	
All	Cable Assy., Main-Recharger Board Interconnect	020-0060-XX
All	Lithium Battery (BT800)	020-0061-XX
All	Fuses, Pico, 3A, 125V, Qty. 10	020-0210-XX
All	Power Switch	680-0010-XX
All	Alarm LEDs and Harness Assy.	010-0019-XX
	Misc. Mechanical Parts	
All	Foot Pads, Qty. 24	020-0033-XX
All	Propaq Handle	020-0034-XX
All	Battery Cover	020-0016-XX
All	Boot Seal, Power Switch	680-0006-XX

Table 8-1 (Cont). Service Parts, "MX"Serial Number Applicability

Labels	English	French	German	Spanish	Japanese
Logo, 102 (LCD)	640-0032-00	640-0032-00	640-0032-00	640-0032-00	640-0115-00
Logo, 104 (LCD)	640-0033-00	640-0033-00	640-0033-00	640-0033-00	640-0113-00
Logo, 106 (LCD)	640-0027-00	640-0027-00	640-0027-00	640-0027-00	640-0116-00
Logo, 102-EL	640-0155-00	640-0155-00	640-0155-00	640-0155-00	640-0250-00
Logo, 104-EL	640-0156-00	640-0156-00	640-0156-00	640-0156-00	640-0251-00
Logo, 106-EL	640-0157-00	640-0157-00	640-0157-00	640-0157-00	640-0252-00
Alarm Panel, Propaq	640-0030-01	640-0059-01	640-0197-00	640-0223-00	640-0030-01
Right Side Panel	640-0028-02	640-0180-00	640-0203-00	640-0225-00	640-0112-03
Right Side Panel, Acuity Opt.	640-0182-00	—-	—-	—-	—-
R.S.P., Ext. F1, 10.5 W	640-0269-00	640-0283-00	640-0282-00	640-0284-00	—-
R.S.P., Ext. F1, 25 W	640-0237-00	—-	—-	—-	—-
R.S.P., Ext. F1, 10.5 W, Acuity	640-0268-00	—-	—-	—-	—-
R.S.P., Ext. F1, 25 W Acuity	640-0236-00	—-	—-	—-	—-
Left Side Panel, 102 AAMI	640-0034-01	640-0087-01	640-0192-00	640-0231-00	640-0034-01
Left Side Panel, 104 AAMI	640-0035-01	640-0088-01	640-0194-00	640-0230-00	640-0035-01
Left Side Panel, 106 AAMI	640-0029-01	640-0060-01	640-0196-00	640-0229-00	640-0029-01
Left Side Panel, 102 HP	640-0152-01	640-0187-00	640-0191-00	640-0234-00	—-
Left Side Panel, 104 HP	640-0153-01	640-0188-00	640-0193-00	640-0233-00	—-
Left Side Panel, 106 HP	640-0154-01	640-0189-00	640-0195-00	640-0232-00	—-
Battery Cover, Monitor	640-0031-01	640-0031-01	640-0202-00	640-0031-01	640-0031-01
SpO2 Connector Side Panel	640-0114-03	640-0148-02	640-0205-00	640-0224-00	640-0177-01
SpO2 Option, Rear Panel	640-0119-01	640-0119-01	640-0206-00	640-0119-01	640-0176-00
EMP, Rear Panel	640-0066-01	640-0066-01	640-0201-00	640-0066-01	640-0066-01
EMP, Front Panel, LCD	640-0063-01	640-0103-01	640-0199-00	640-0227-00	640-0063-01
EMP, Front Panel, EL	640-0170-00	640-0178-00	640-0198-00	640-0226-00	640-0170-00
EMP, Paper Door	640-0065-00	640-0102-00	640-0200-00	640-0228-00	640-0065-00

Appendix A

Buildable Test Equipment

This appendix contains information that allows the service technician to build the following special test fixtures required for calibration and testing.

- Electromedics 37° C Temperature Simulator
- Power Supply Connectors
- Battery Substitution Plugs
- Battery Temperature Sensor Substitution Plug
- RS-423 Loopback Test Fixture

The parts to build these fixtures are available from either the part manufacturer or from Protocol Systems, Inc. where Protocol's part number is listed. Contact Protocol Systems for information on ordering these parts.

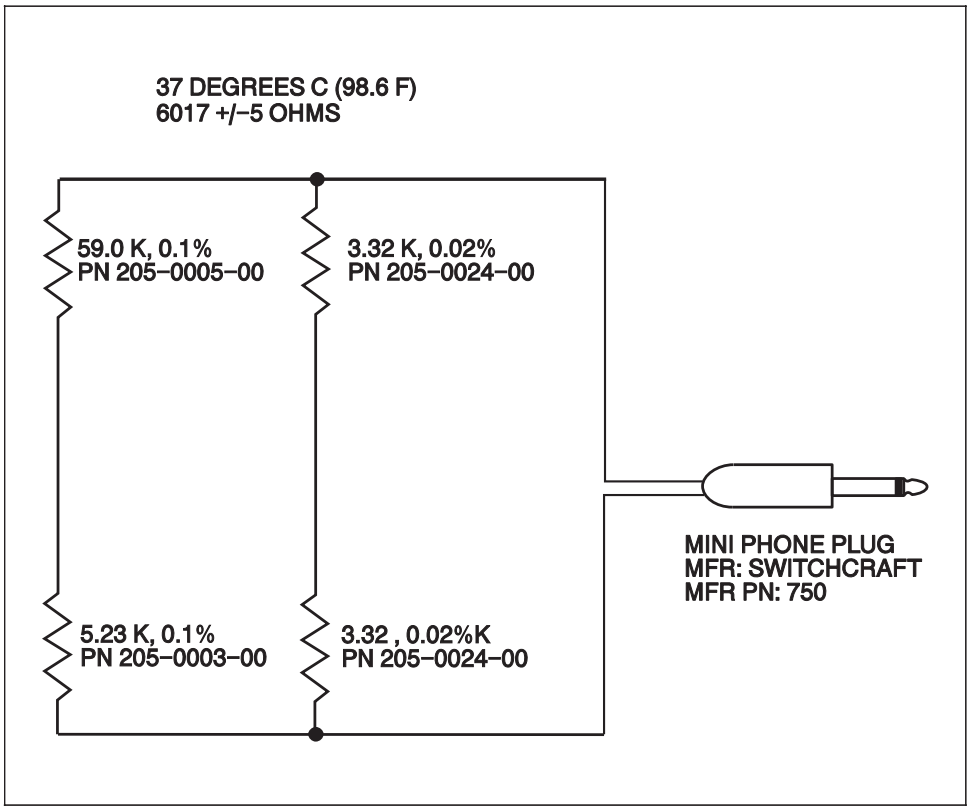

Fig. A-1. Electromedics 37°C Temperature Simulator Schematic

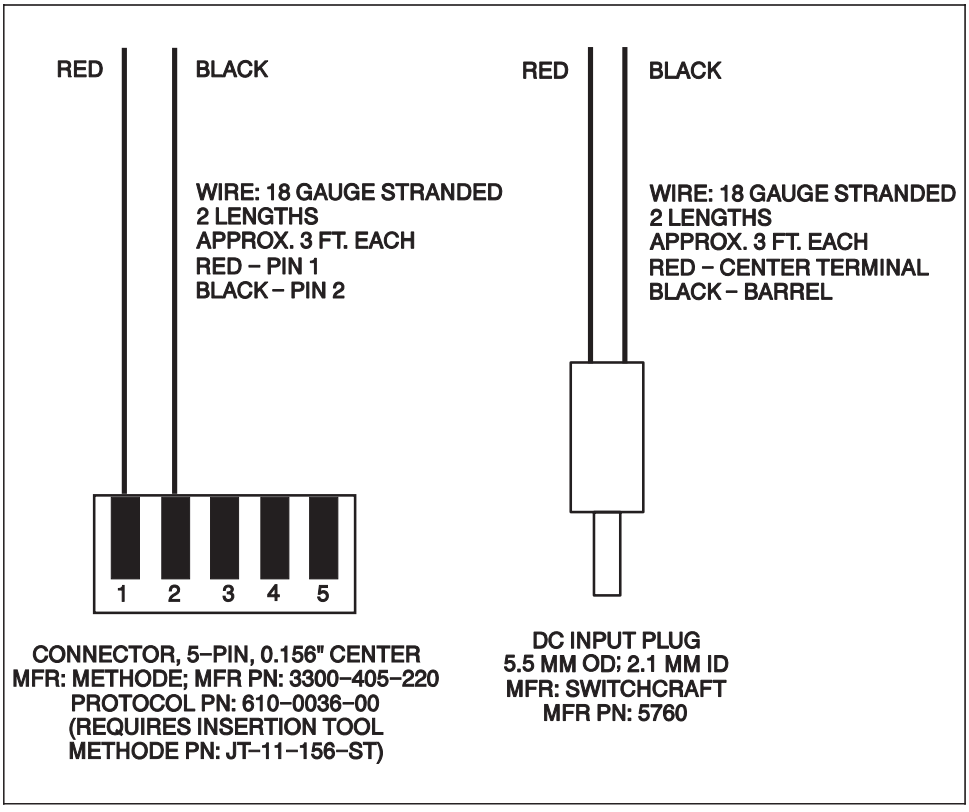

Fig. A-2. Power Supply Adapter Cables Schematic

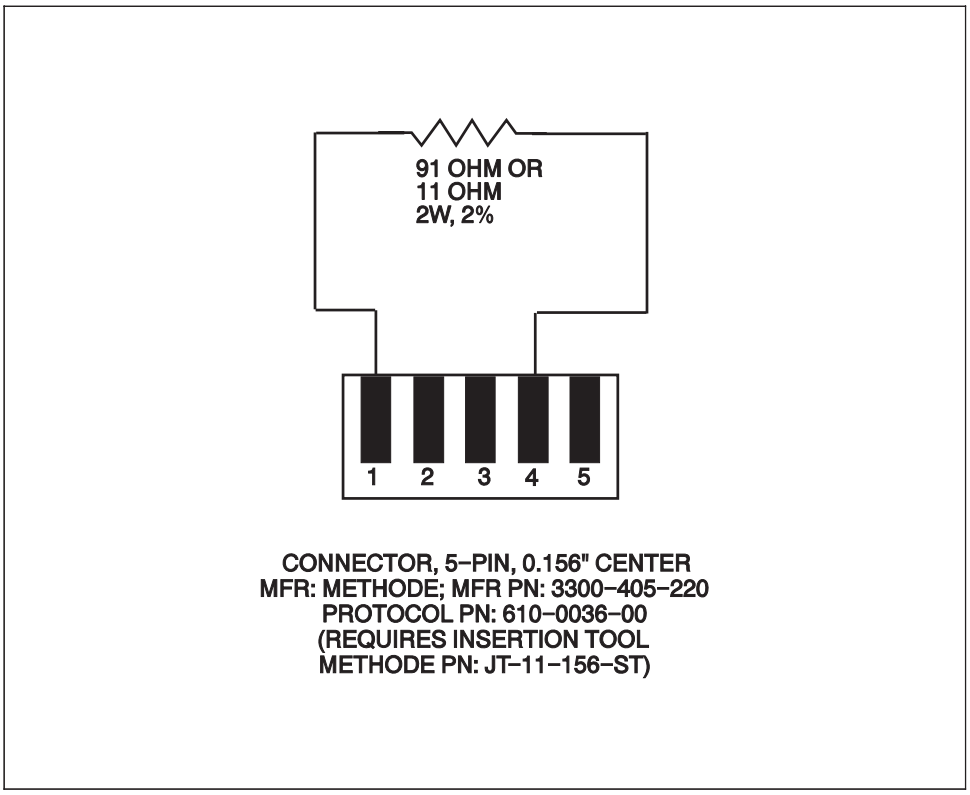

Fig. A-3. Battery Substitution Plugs Schematic

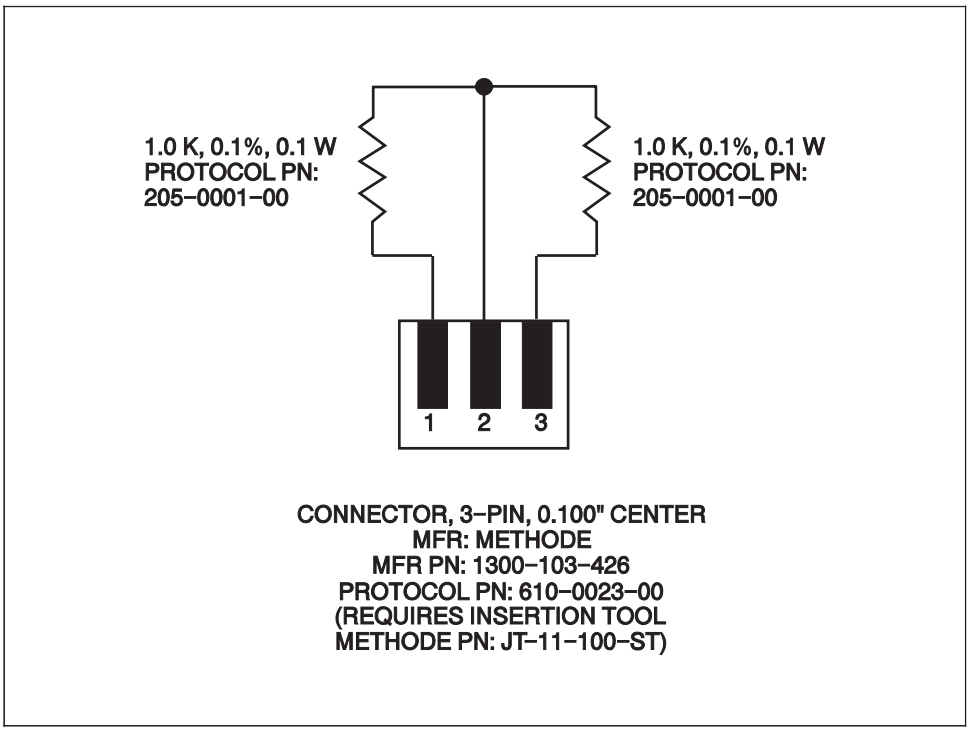

Fig. A-4. Temperature Sensor Substitution Plug Schematic

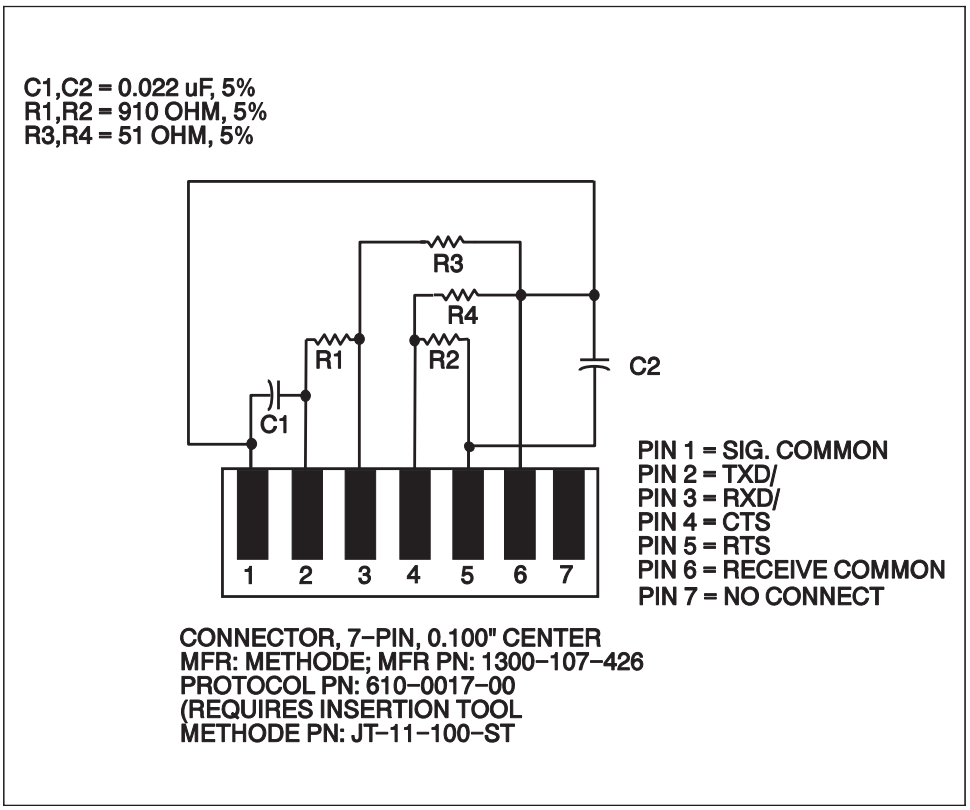

Fig. A-5. RS-423 Loopback Test Fixture

Appendix B

Dynatech/Nevada Patient Simulator Modification

The factory configuration of the Dynatech/Nevada model 214A, 215A, and 217A Patient Simulators is incompatible with the Propaq 104 and 106 when both the ECG and invasive pressure simulator channels are simultaneously connected to the monitor. Erroneous readings result. The patient simulator must be modified as described in this appendix in order to use both simulator channels with the Propaq 104 and 106. If only one simulator channel is used, the modification does not need to be done.

1. Modify the patient simulator's invasive pressure cable as shown in Figure B-1 and Table B-1.

2. Remove jumpers "W1" and "W2" from the patient simulator's "Top PCB" as shown in Figure B-2.

Incompatibilities with other simulators may also cause erroneous readings. Check Propaq readings with the simulator against a known source before using the simulator for calibration.

Table B-1. Modified Dynatech/Nevada Model 215A Cable Wiring

Function	Color	Pin No.	Propaq 104/106
Output (+)	Black	4	C
Output (-)	Red	1	A & E
Exciter (+)	White	3	B
Exciter (-)	Green	5	D
ECG Ref	Blue	2	No Connection

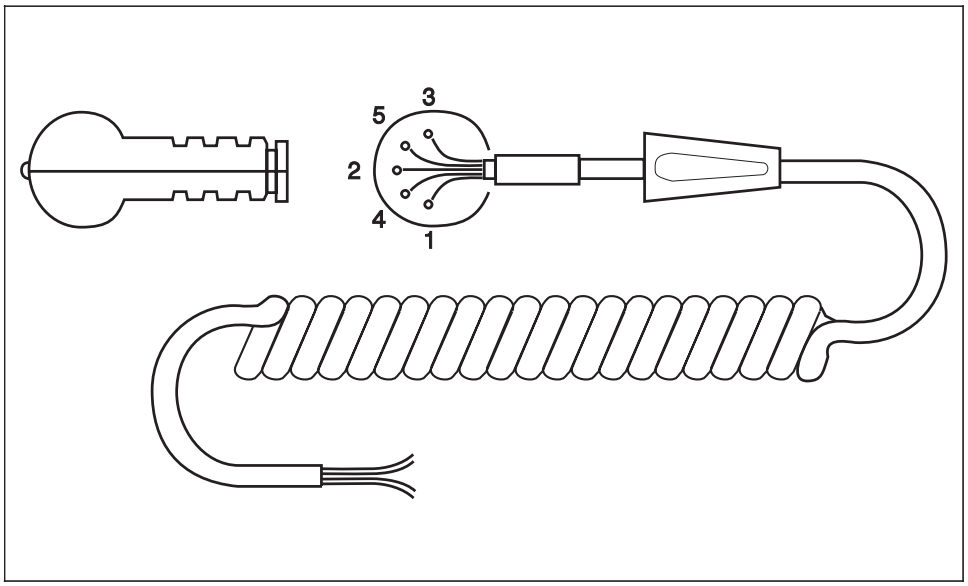

Fig. B-1. Modified Invasive Pressure Model 215A Cable

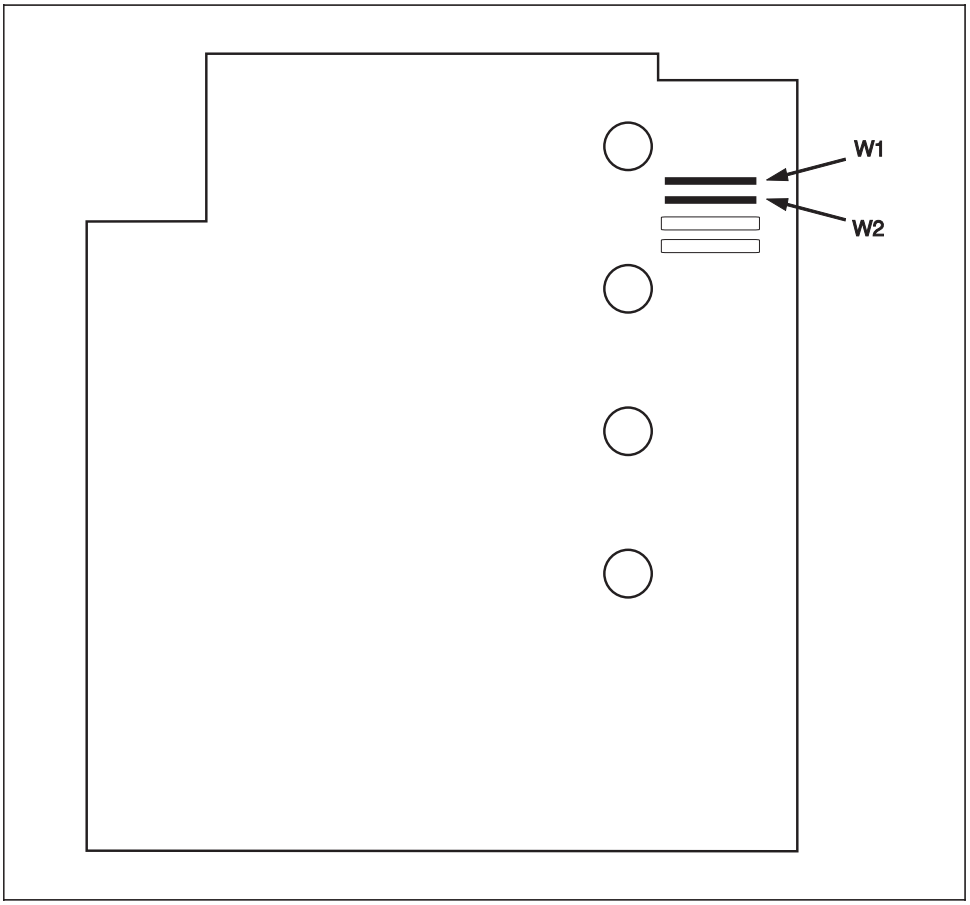

Fig. B-2. Model 215A Top PCB Modification

Appendix C

Software Revision History

During power-up, the Propaq monitor displays a software version number. Software versions are numbered as follows:

xx.yy.zz

where:

xx = Major software version identifier
yy = Minor software revisions
zz = Hardware/Non-Table-Driven Dependencies

NOTE

The language to be used, and any extra features (such as Acuity capability) are programmed at the Protocol Factory or Service department.

Table C-1. Software Revisions

Version	Features/Enhancements
7.00.00	Initial Product Release
7.01.00	Changed Network Alert
8.00.00	Adds CO_2 Function