FLUIDO™ DHT

SERVICE MANUAL

Models:

1480
(Serial Numbers- 1000 and above)

1481
(Serial Numbers- 1000 and above)

CHATTANOOGA GROUP A DIVISION OF encore MEDICAL

ISO 13485 CERTIFIED

TABLE OF CONTENTS

FOREWORD

Read, understand and follow the Safety Precautions and information contained in this manual.

This manual contains the necessary safety, and field service information for those Field Service Technicians, approved by Chattanooga Group, to perform field service on the Fluido DHT Models 1480 and 1481 units.

At the time of publication, the information contained herein was current and up to date. However, due to continual technological improvements and increased clinical knowledge in the field of fluidotherapy, as well as Chattanooga Group's policy of continual improvement, Chattanooga Group reserves the right to make periodic changes and improvements to their equipment and documentation without any obligation on the part of Chattanooga Group.

It is the sole responsibility for field technicians to stay informed and trained in the latest technology utilized in the Fluido DHT Models 1480 and 1481 units by Chattanooga Group. From time to time, as significant improvements are incorporated, Service Bulletins will be produced and made available on our web site (www.chattgroup.com) in lieu of reprinting a complete manual prematurely. These Service Bulletins will provide updated service information and technological improvements to the Fluido DHT Models 1480 and 1481 for use by approved service technicians.

Due to the complex nature of the technology utilized by Chattanooga Group, the recommended troubleshooting techniques for PC Boards are to determine "Bad Board" and PC Board replacements only. No board component level troubleshooting is recommended nor will information or parts be supplied by Chattanooga Group. Any PC Board component level troubleshooting performed will be at sole risk and liability of the Service Technician performing such troubleshooting techniques.

This equipment is to be sold and used only under the prescription and supervision of a licensed medical practitioner.

This equipment is to be serviced only by an "Approved Service Technician".

For Additional Service Contact:
Chattanooga Group
DHT Support Department
Toll Free: 1-866-864-0598
Outside USA: +1-423-870-7200

SYMBOL DEFINITION

The following symbols are located on the Chattanooga Group Fluido DHT Dry Heat Therapy Unit Control Panel. Understand the meaning of each symbol before attempting any operation or use of the unit.


This symbol indicates therapy session Time adjustment.


This symbol indicates therapy session Temperature adjustment.


This symbol indicates therapy session Air Speed adjustment.


This symbol indicates Upward adjustment in function parameters.


This symbol indicates Downward adjustment in function parameters.


This symbol with the illuminated Blue indicator light indicates the Intake Filter requires changing.


This symbol with the illuminated Blue indicator light indicates the Cellex® media requires changing.


This symbol indicates Start therapy session.


This symbol indicates Stop therapy session.


This symbol indicates Pulse Mode for pulse therapy sessions.


This symbol indicates Preheat Standby function.

Precautionary Symbol Definitions

The precautionary instructions found throughout this manual are indicated by specific symbols. Understand these symbols and their definitions before operating or servicing this equipment. The definitions of these symbols are as follows:

⚠ CAUTION

CAUTION

Text with a "CAUTION" indicator will explain possible safety infractions that could have the potential to cause minor to moderate injury or damage to equipment.

⚠ WARNING

WARNING

Text with a "WARNING" indicator will explain possible safety infractions that will potentially cause serious injury and equipment damage.

⚠ DANGER

DANGER

Text with a "DANGER" indicator will explain possible safety infractions that are imminently hazardous situations that would result in death or serious injury.

NOTE:

Throughout this manual "NOTE" may be found. The Notes are helpful information to aid in the particular area or function being described.

Safety Precautions

Read, understand and follow all safety precautions found in this manual. The following are general safety precautions that must be read and understood before attempting any service techniques on these units. Throughout this manual, specific safety precautions will be found. Read, understand and follow all safety precautions.

⚠ CAUTION

- Read, understand and practice the precautionary and operating instructions found in this manual. Know the limitations and hazards associated with using any electrical device. Observe the precautionary and operational decals placed on the unit.
- DO NOT operate the unit when connected to any unit other than Chattanooga Group devices.
- Refill unit daily to proper fill level with Chattanooga Group Cellex® Dry Heat Medium.
- Change Cellex Dry Heat Medium every six (6) months.
- Use only Cellex Dry Heat Medium in the Fluidotherapy units.
- Clean Inlet Filter(s) daily before unit startup.
- Use only fingers to operate button controls on the control panel(s). Use of sharp objects such as pencils or pens will result in damage to the unit.
- Turn unit to the "Standby" mode before positioning a patient or removing a patient from the unit.
- After or between treatments, do not immediately unplug or turn the power off from the unit. Allow the unit to process through the "Cool Down" cycle. The unit cycles into standby mode after treatment time has elapsed. Standby can be disabled by pressing the preheat/standby button. The unit goes to a 3 minute cool down mode after standby is turned off. Turning the power off before cool down completes is potentially hazardous to the equipment, and could lead to failure of the unit. It is recommended that power be supplied to the unit at all times. Keep in mind that the recommended treatment air speed is 50%
- Secure all entry ports before turning the unit ON.
- Check unit temperature before treating patient to ensure correct temperature.
- Place the patient in a comfortable position allowing for correct placement of the limb being treated.
- Proper storage and transport temperatures for the Fluido DHT units are 40°F - 158°F (4.5 °C - 70°C). Relative Humidity 85%.
- This equipment generates, uses and can radiate radio frequency energy and, if not installed and used in accordance with the instructions, may cause harmful interference to other devices in the vicinity. However, there is no guarantee that interference will not occur in a particular installation. Harmful interference to other devices can be determined by turning this equipment on and off. Try to correct the interference using one or more of the following: Reorient or relocate the receiving device, increase the separation between the equipment, connect the equipment to an outlet on a different circuit from that to which the other device(s) are connected and/or consult the factory field service technician for help.

⚠ WARNING

- Federal law restricts this device to sale by, or on the order of, a physician or licensed practitioner. This device should be used only under the continued supervision of a physician or licensed practitioner.
- For continued protection against fire hazard, replace fuses only with ones of the correct type and rating.
- Make certain the unit is electrically grounded by connecting only to a grounded electrical service receptacle conforming to the applicable national and local electrical codes.
- This device should be kept away from children.
- Care must be taken when operating this equipment around other equipment. Potential electromagnetic or other interference could occur to this or to the other equipment. Try to minimize this interference by not using other equipment in conjunction with it.
- Before administering any treatment to a patient you should become acquainted with the operating procedures for each mode of treatment available, as well as the indications, contraindications, warnings and precautions. Consult other resources for additional information regarding the application of Dry Heat Therapy.
- To prevent electrical shock, disconnect the unit from the power source before attempting any maintenance procedures.
- Use only Cellex® processed dry heat medium in the unit to prevent excessive dusting.
- Adequate precautions should be taken when treating individuals with suspected or diagnosed medical conditions or diseases such as heart problems, epilepsy, diabetes, etc.
- Prior to treatment, consult a medical professional familiar with the precautionary measures to be taken for patients that may experience allergic reactions to dust and pollen.
- Properly dispose of used Cellex according to National and local laws, rules and regulations.

⚠ DANGER

- Perform all Required Maintenance as described in this and the User Manual. Strict adherence to the Required Maintenance for the Fluido DHT units is mandatory. Failure to perform the Required Maintenance could result in the Cellex medium entering the heat chamber of the unit(s) and cause severe injury to patients as well as smoke damage to the facility and the Fluido DHT unit(s).
- Make certain the unit is unplugged from the power source before attempting any removal and replacement procedures on the unit.

THEORY OF OPERATION

The Fluido DHT utilizes ambient air and pressurizes it via an internal blower. The pressurized air is directed across a heating element bringing the media to the desired treatment temperature. The heated, pressurized air is then diffused across and through a baffle to fluidize and heat the Cellex media in a patient treatment reservoir. All treatment parameters; air speed, temperature, treatment time and the unit preheat settings are programmed by the operator with the touch panel user interface. The Fluido DHT unit base incorporates four locking casters and a manually operated hydraulic lift to adjust height and rotation of the treatment reservoir for patient comfort.

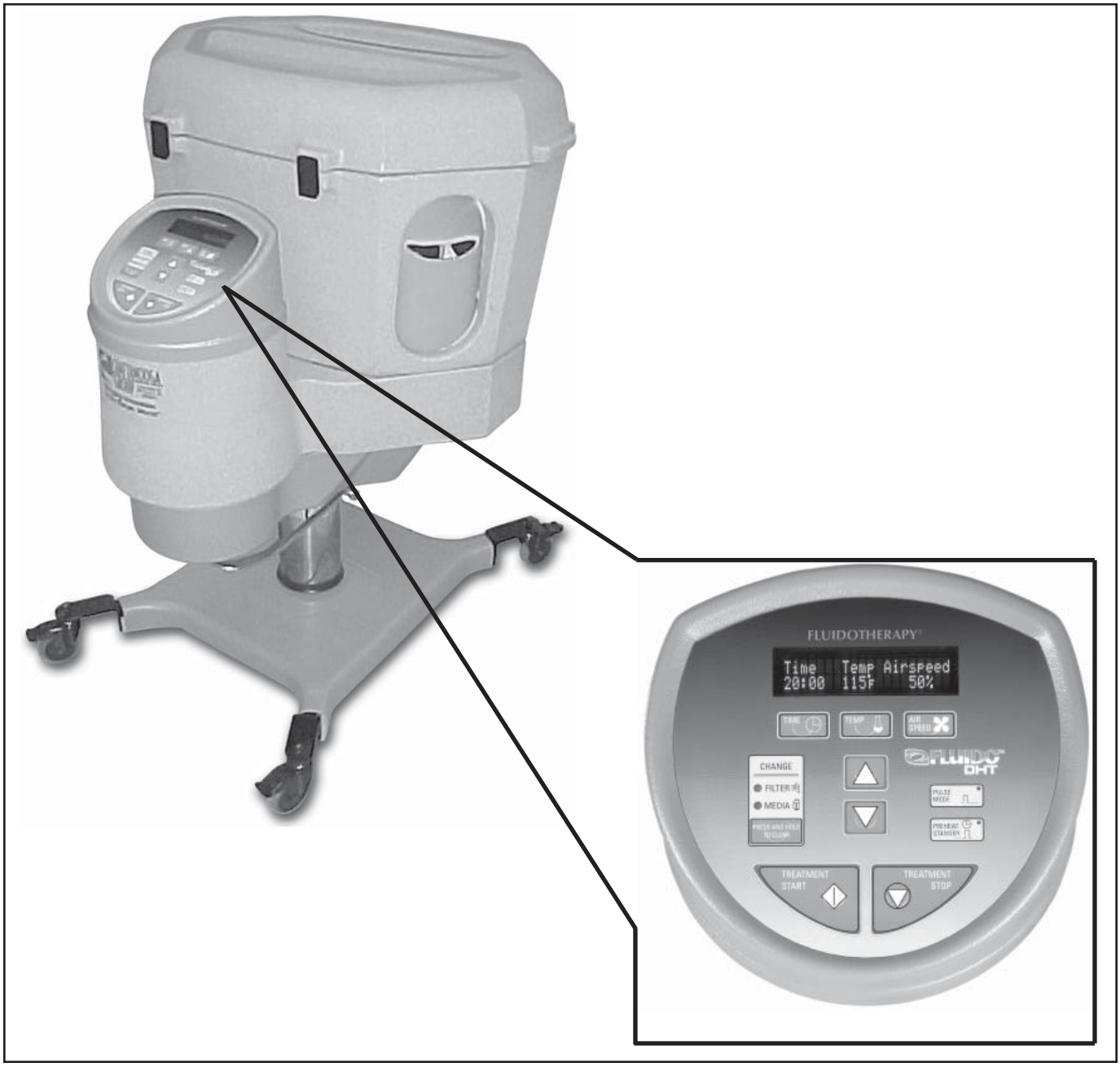

Fluido DHT

The nomenclature graphics below, Figure 3.1, indicate the general locations of the major components of the Fluido DHT unit.

Know the components and their functions before performing any operation of or service to the Fluido DHT Model 1480 and 1481 unit.

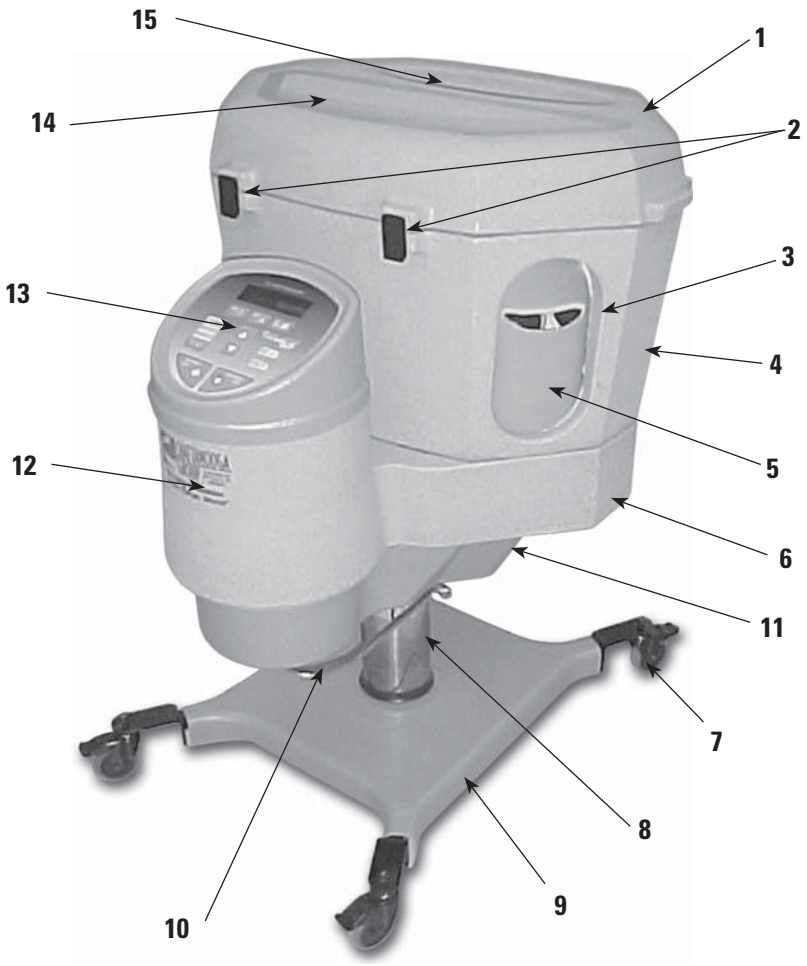

1. **Reservoir Lid** - Allows access to the treatment cavity for adding Cellex® medium.
2. **Latches** - Secures Reservoir Lid.
3. **Side Access Ports** - Four available Side Access Ports: two on each end of the unit.
4. **Reservoir/Treatment Cavity** - Patient treatment cavity and Cellex Reservoir.
5. **Treatment Limb Sleeves** - Replaceable and launderable patient limb treatment sleeves.
6. **Heat Chamber** - Houses Heating element.
7. **Locking Casters** - Four Locking Casters for securing the unit in place for treatment.
8. **Elevation Adjustment Cylinder** - Adjusts and maintains reservoir to desired height for patient comfort.
9. **Unit Base** - Rigid unit base for ease in transporting unit to different locations for treatment.
10. **Height Adjustment Pedal** - Used to raise, rotate, release, and lock the cylinder for height adjustment of the unit.
11. **Intake Filter** - Air intake filter. Requires periodic replacement.
12. **Blower Housing** - Houses Blower Motor.
13. **Control Panel** - Operator Controls. See Page 7 for detail description of each control.
14. **Treatment Cavity Viewing Window** - View treatment area during treatment.
15. **Top Access Port** - Top Treatment access port with sleeve.

Fluido Control Panel

The Control Panel nomenclature graphics below, Figure 3.2, indicate the location and functions of the Fluido DHT Model 1480 and 1481 control panel.

Know the components and their functions before performing any operation of or service to the Fluido DHT Model 1480 and 1481 unit.

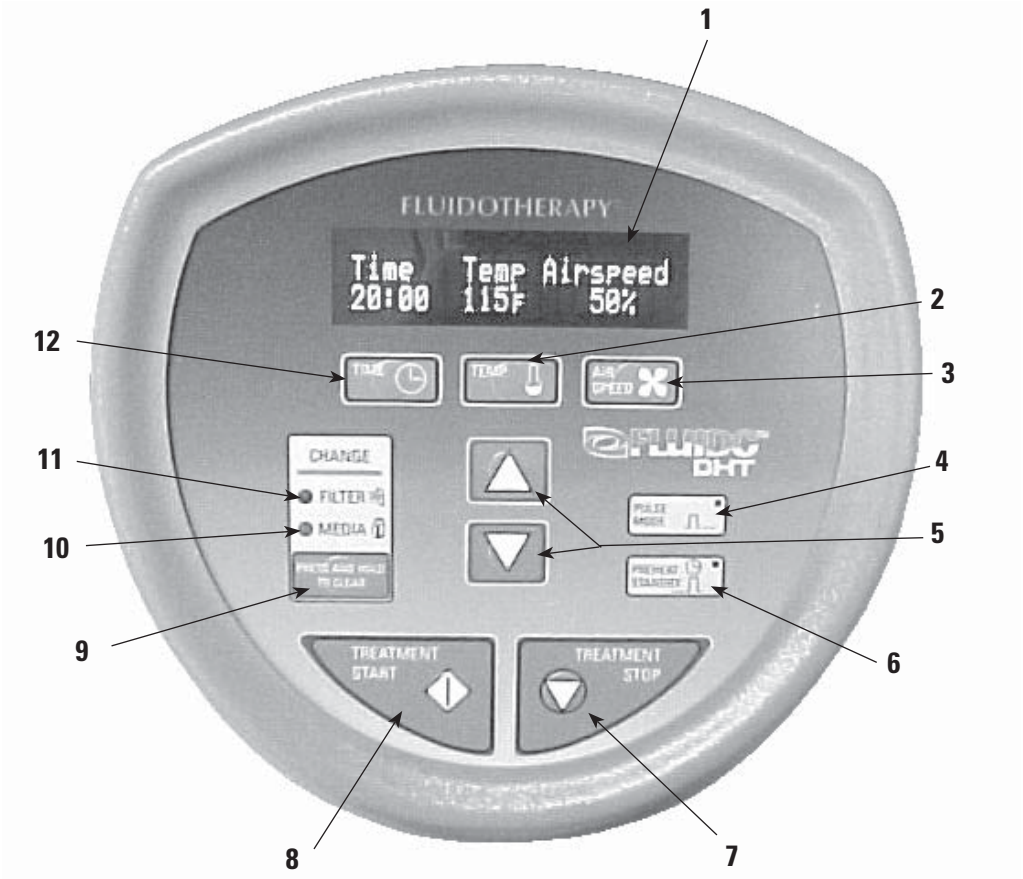

1. **Panel Display** - Displays settings and operational parameters.
2. **Temperature** - Use in conjunction with the Up and Down arrows to set operation temperature. Temperature can be adjusted in 1° increments. The available temperature range is 88° F to 125° F (31° C to 52° C).
3. **Air Speed** - Use in conjunction with the Up and Down arrows to adjust air speed for fluidization of the Cellex® Medium. Available speeds range from 5% to 100%.
4. **Pulse Mode** - Turn Pulse Mode on and off as well as adjust pulse time. Available Pulse Time is from 1 second on/1 Second off to 6 Seconds on/6 Seconds off.
5. **Up and Down Arrows** - Use in conjunction with other mode or function buttons to set desired parameters.
6. **Preheat Standby** - Turn the Preheat Standby Mode on and Off as well as set the parameters desired for the Preheat Standby Mode to automatically start.
7. **Treatment Stop** - Press to stop treatment.
8. **Treatment Start** - Press to start treatment.
9. **Clear Button** - Used to turn off maintenance indicators after maintenance has been properly performed.
10. **Media** - Indicator will light when it is time to change the Cellex® Medium.
11. **Filter** - Indicator will light when it is time to change the required filters.
12. **Time** - Use in conjunction with the Up and Down arrow buttons to set treatment time. Available time is 1 to 99 minutes in one minute increments, or Continuous.

Model 1480

Mode of Operation . . . . . .Continuous
Operational Functions
Variable Adjustments . . . . . .Time, Temp and Air Speed
Pulse Mode . . . . . .Off to 6 Sec On/Off
Available Languages . . . . . .English, Spanish, and French
Treatment Time . . . . . .1 to 99 minutes and Continuous
*Operating Temperature . . . . . 88 °F (31 °C) to 125 °F (52 °C)
Air Speed . . . . . .5% to 100% (5% increments)
Preheat Timer . . . . Per default setting with 50% Air Flow during 30 min. . . . . preheat then 5% airflow for standby.
Cellex® Medium Capacity . . . . . .20-25 lbs (9-11 kg)
Input Power . . . . . 120V, 50/60 Hz, 12A
Fuse Rating . . . . . 10 A Time Delay (Slo-Blow)
Physical Dimensions
Unit Depth . . . . . .31" (79 cm)
Unit Width . . . . . 29.5" (75 cm)
Overall Height . . . . . 41" - 49" (104 cm - 124 cm)
Patient Height . . . . . 31" - 39" (79 cm - 99 cm)
Reservoir Swivel . . . . . .360°
Weight . . . . . 145 lbs (66 kg)
Shipping Weight (Including Stool) . . . . . 210 lbs (95 kg)
Electrical . . . . . .Class I

Type B Equipment

Attention, consult accompanying documentation.
Ordinary equipment: Not designed to prevent ingress of water.
*Dependent upon airspeed selected and ambient temperature.

Model 1481

Mode of Operation . . . . . .Continuous
Operational Functions
Variable Adjustments . . . . . .Time, Temp and Air Speed
Pulse Mode . . . . . .Off to 6 Sec On/Off
Available Languages . . . . . English, German, Spanish, French, ... Italian, Portuguese, Dutch, Danish, and Swedish
Treatment Time . . . . . 1 to 99 minutes and Continuous
*Operating Temperature . . . . . 31 °C (88 °F) to 52 °C (125 °F)
Air Speed . . . . . .5% to 100% (5% increments)
Preheat Timer . . . . Per default setting with 50% Air Flow during 30 min. . . . . .preheat then 5% airflow for standby.
Cellex® Medium Capacity . . . . . .9-11 kg (20-25 lbs)
Input Power . . . . . 220V, 50/60 Hz, 12A
Fuse Rating . . . . . 10 A Time Delay (Slo-Blow)
Physical Dimensions
Unit Depth . . . . . .79 cm (31")
Unit Width . . . . . 75 cm (29.5")
Overall Height . . . . . 104 cm - 124 cm (41" - 49")
Patient Height . . . . . 79 cm - 99 cm (31" - 39")
Reservoir Swivel . . . . . .360°
Weight . . . . . 66 kg (145 lbs)
Shipping Weight (Including Stool) . . . . . 95 kg (210 lbs)
Electrical . . . . . .Class I

Type B Equipment

Attention, consult accompanying documentation.
Ordinary equipment: Not designed to prevent ingress of water.
*Dependent upon airspeed selected and ambient temperature.

DAILY MAINTENANCE

⚠ WARNING

- Before any Maintenance is performed or attempted, unplug the unit from the power source to prevent the possibility of electrical shock.

CLEAN INLET FILTERS

At the end of each work day, unplug the unit and clean the Inlet Filters on the unit by brushing them off.

If your filter screens become stained with dust residue and will no longer brush clean, carefully remove the filter retainer and wash the filter and screen with a mild antibacterial soap and water. Thoroughly dry the filter and screen before placing back on the unit.

Should the filter become damaged, torn, or punctured, call your dealer for replacement of the filter before resuming operation.

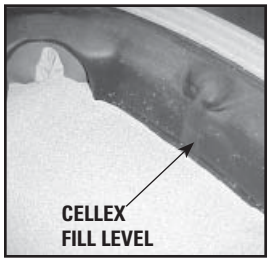

REFILL WITH CELLEX® MEDIUM

Refill the unit with Cellex Dry Heat Medium to the fill level indicator in the reservoir.

NOTE:
Use of other than Cellex Medium may cause premature failure of the Fluido DHT.

INSPECT SLEEVE CONDITION

Inspect the port sleeves for tears, rips, and weak seams. Replace all sleeves that show signs of tears, rips, weak or loose seams, or excessive wear. Keeping the sleeves in excellent condition prevents excessive spillage of the Cellex medium.

MONTHLY MAINTENANCE

Each month, all sleeves of the Fluido DHT unit should be laundered in a mild antibacterial detergent. Allow the sleeves to air dry or dry on a low temperature setting. Drying the sleeves in high temperatures could cause the sleeves to shrink or become distorted resulting in the sleeve(s) not properly fitting when placing them back onto the unit.

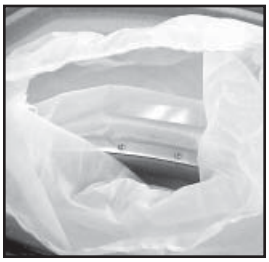

REMOVING TOP SLEEVES

Unplug the unit from the power source.

Remove Treatment Reservoir Top turn upside down and remove the retaining ring from the top sleeve with a 1/8" Allen Wrench. Remove sleeve and launder.

Replace in reverse order making certain the retaining ring has the sleeve captured completely to prevent escape of the Cellex® around the sleeve.

REMOVING END SLEEVE

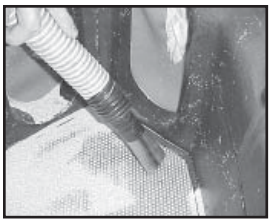

Remove Treatment Reservoir Top.

Drain the Cellex from the Reservoir. See page 10.

Vacuum the reservoir making certain to clean all Cellex from the screw heads.

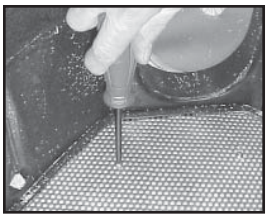

Remove seven screws retaining the top piece of perforated metal.

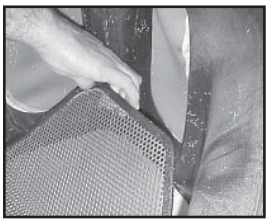

Remove perforated metal from reservoir.

Pull the Reservoir Insert free from the reservoir upper lip and hold away from sleeve.

Pull the sleeve off of the mounting boss on the inside of the unit.

Launder and replace in reverse order.

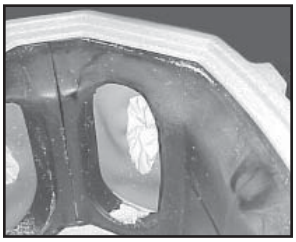

Reseat the Reservoir Insert into the upper lip of the reservoir.

Refill the reservoir with Cellex Medium to the proper level. See image on the right.

BI-ANNUAL MAINTENANCE

In order to maintain the Chattanooga Group Fluido DHT in optimum operating condition, the Cellex® Media should be changed bi-annually or when the Media indicator on the control panel is illuminated.

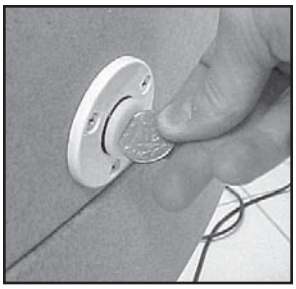

CHANGING CELLEX MEDIA

Set the Air Speed to 5% or 10%.

Remove the Reservoir Drain Plug located on the back of the unit using a coin or flat blade screwdriver.

Place an empty container in position to catch the media and press the Treatment Start button on the control panel. The media should freely flow out of the unit into the catch container.

After the media has stopped flowing out of the unit, press Treatment Stop and disconnect the unit from the power outlet. Vacuum out any remaining Cellex and clean the inside of the Reservoir using a cloth dampened with a mild antibacterial soap and water. Allow the reservoir to completely dry before filling with new Cellex.

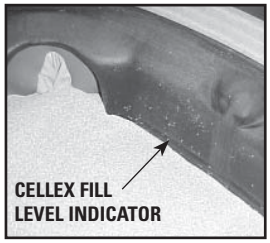

Fill the reservoir with new Cellex to the Fill Line. The reservoir should require approximately 30 lbs (13.5 kg) of Cellex Media.

Run the unit for one hour at 50% Air Speed after filling with new Cellex and before any patient treatment to ensure proper operation of the unit.

⚠ WARNING

- Do not allow soap and water to penetrate the distributor when cleaning the unit. Components below the distributor can be damaged and the unit may not operate properly should they become wet. If moisture is suspected to have penetrated the distributor, call a certified service technician for service before the unit is filled with Cellex and operated.
- Use only Cellex® processed dry heat medium in the unit to prevent excessive dusting.
- Properly dispose of used Cellex according to national and local laws, rules, and regulations.

VERIFYING TEMPERATURE CALIBRATION

After each change of Cellex media, perform a temperature check to ensure that calibration of unit has not changed.

The temperature displayed on the display is an average of the temperature throughout the media chamber. Because the media is fluidized by the movement of forced air, there are zones throughout the chamber. The temperatures measured in each zone may vary by ± 8° F or ± -13°C.

Once the Cellex has been changed and operated at 50% for 1 hour, turn off the unit and immediately remove the lid to the unit. With a calibrated thermometer, take a temperature reading in the following zones – approximately half way down from the top of the media.

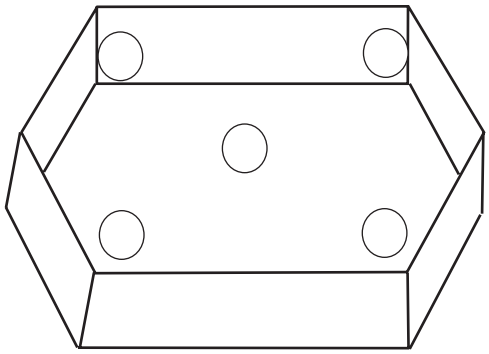

Calculate the average temperature by adding all five readings together and dividing by 5. The resultant number should reflect the set temperature ± 2° F or ± -17°C.

ADDITIONAL FLUIDOTHERAPY MAINTENANCE REQUIREMENTS

The following additional maintenance requirements must be scheduled and performed as described to ensure that the unit is operating efficiently, safely, and functioning optimally. A blank Maintenance Record is provided on page 12 to aid in the scheduling and record keeping of this prescribed maintenance program. The following maintenance procedures must be performed by a Chattanooga Group qualified service technician trained in the maintenance requirements of the Chattanooga Group Fluido DHT units.

QUARTERLY (Every 3 Months)

The following maintenance must be performed on all units quarterly by a certified service technician.

- Internal Cavity Inspection and Cleaning
- Full Functional and Performance Tests

BI-ANNUAL (Every 6 Months)

The following maintenance must be performed on all units every six months in addition to the quarterly maintenance requirements by a certified service technician.

- Change Cellex® Medium

AS NEEDED

The following maintenance must be performed on all units only if performance test results indicate replacement is necessary in addition to the quarterly and bi-annual maintenance requirements by a certified service technician.

- Intake Filter Replacement
- Distributor Replacement

FLUIDOTHERAPY MAINTENANCE RECORD

UNIT SERIAL NUMBER _____ **UNIT MODEL NUMBER** _____ **DATE PLACED IN SERVICE** _____

DEALER: _____ **PHONE:** _____ **CONTACT** _____

DATE	MAINTENANCE PERFORMED	TECH INITIALS

Completing this form:

"DATE"- Date Service is performed

"MAINTENANCE PERFORMED"- Quarterly, Bi-Annual, or Annual

"TECH INITIALS"- Certified Tech's Initials

Fluido DHT Model 1480 and 1481 Software Error Messages

Error	Possible Cause	Action to be Taken
Motor/Blower Error The AIRSPEED shows four dashes on the Control Panel LCD.	• The intake filter is clogged.	Clean the intake filters. Refer to the Maintenance Section of the User Manual for proper procedure.
	• The motor has overheated.	Allow the motor to cool before resuming operation.
	• The diffuser is clogged.	Refer to the Removing and Replacing of the Diffuser Section on pages 20-21 of this manual for proper procedure.
	• Cellex Medium has entered the heat cavity.	**⚠ CAUTION** Make certain that you do not spill any Cellex into the heater enclosure cavity. Use a wet/dry vacuum to remove any exposed, excess Cellex Medium.
Temperature Sensor Error	• The intake filter is clogged.	Clean the intake filters. Refer to the Maintenance Section of the User Manual for proper procedure.
	• The diffuser is clogged.	Refer to the Removing and Replacing of the Diffuser Section on pages 20-21 of this manual for proper procedure.
	• Cellex Medium has entered the heat cavity.	**⚠ CAUTION** Make certain that you do not spill any Cellex into the heater enclosure cavity. Use a wet/dry vacuum to remove any exposed, excess Cellex Medium.
	• The temperature sensor is faulty.	Reset the temperature sensor by pressing and holding the "Stop" button for 10-15 seconds. Release the "Stop" button and turn the unit on. It will be necessary to reset the clock (refer to the Installation and Setup Section of the User Manual). If error persists, remove and replace the temperature sensor (P/N 14215). Refer to the Wiring Diagrams on pages 31-32.
Control Panel Lock-Up	• The parameters are not correct.	Reset the Factory Default Settings. Refer to the Troubleshooting Section on page 15 of this manual for proper procedure.
	• The Control Panel PC Board is faulty.	Replace the Control Panel PC Board. Refer to the Replacing the Control Panel PC Board Section on page 18 for proper procedure.

Fluido DHT System Testing

General

The following information is intended to aid in troubleshooting the major components of the DHT Units to "Board Level" only. These tests are OEM standard testing procedures and methods used at the factory before shipment of any Fluido unit.

Due to the complex nature of the technology utilized by Chattanooga Group, the recommended troubleshooting techniques are to determine "Bad Board" and board replacement only. No board component level troubleshooting is recommended nor will information or parts be supplied by Chattanooga Group. Any board component level troubleshooting performed will be at sole risk and liability of the Service Technician performing such troubleshooting techniques.

Once the PC Board has been determined as bad, replace the board only with Chattanooga Group OEM replacement parts and hardware.

Special Tools, Fixtures & Materials Required

Certain tests require the use of special tools and fixtures. These will be listed at the particular test where they are required. Testing with any other special tool or fixture other than those stated could give erroneous readings or test results. Always perform the tests exactly as stated to ensure accurate results.

Standard test equipment settings will be listed for each test performed to aid in performing the test to OEM standards and ensure proper readings.

The troubleshooting and repair of the Fluido DHT units, should be performed only by authorized technicians trained and certified by Chattanooga Group.

Equipment Required

Digital Multimeter

Dielectric Withstand (Hi-Pot) and ground resistance tester

Milliohm Meter

Calibrated Thermometer

Calibrated Stop Watch

NOTE:

Adjust Dielectric Withstand tester to indicate fault with 120k Ohm Load across the output when at specified test voltage.

⚠ CAUTION

- The following tool requirements are critical to the component removal and replacement of the Fluido DHT unit.
- All hardware, bolts, nuts and screws used to assemble the Fluido DHT are SAE Standard. Due to the size of these components no metric equivalent is available. Therefore, it will be necessary to obtain the proper size tools for removal and replacement of certain components.

Required SAE Tools

#1 Phillips Screwdriver

#2 Phillips Screwdriver

5/16, 7/16, 9/16, 1/2, 5/32, and 11/32 Wrenches

1/8 and 5/32 Allen Wrenches (or drill bits)

Utility Knife

Wet/Dry Vacuum

NOTE:

The tool requirements will be listed at the respective removal and replacement procedures throughout this manual.

Visual Inspection

General

Visually inspect the Fluido DHT unit. A visual inspection can, to an experienced Technician, indicate possible abuse of the unit and/or internal problems.

Ground Resistance Test

Voltage Specifications

Model 1480 . . . . Input: 120 VAC~50/60 Hz, 40 Watts

Model 1481. . . . Input: 230 VAC~50/60 Hz, 40 Watts

Specification

Maximum Acceptable Resistance: 500 milliohms

Equipment Required

Milliohm Meter

Test

Place unit on level work surface.

Leakage Tests

Test Voltage Spec 1000V

Conduct all necessary leakage tests as required per "Chapter 7 Electrical Equipment" of the 1999, or later, edition of the NFPA (National Fire Protection Association) "Health Care Facilities" standards.

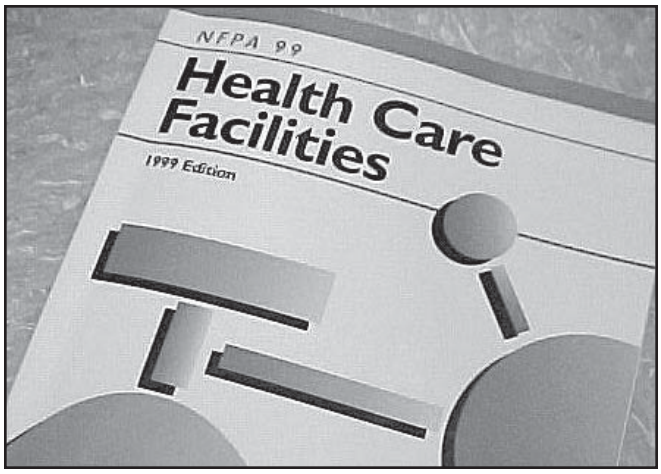

⚠ WARNING

- Unit failing Dielectric Withstand and/or Leakage Tests could indicate serious internal system problems.
- Do not place unit back into service.
- Send unit to factory for repair.
- Do not attempt to repair in the field.

Resetting Fluido DHT Factory Default Settings

To reset all factory default settings of the unit, turn unit Off. Depress and hold the "Clear" button on the control panel and turn unit on simultaneously.

Preheat Test

Tools & Equipment Required

Calibrated Thermometer

Preheat Test Procedures

Power Requirements:

Model 1480 . . . . . .120 VAC

Model 1481 . . . . . .230 VAC

Plug the unit power cord to a grounded electrical service receptacle conforming to the applicable national and local electrical codes.

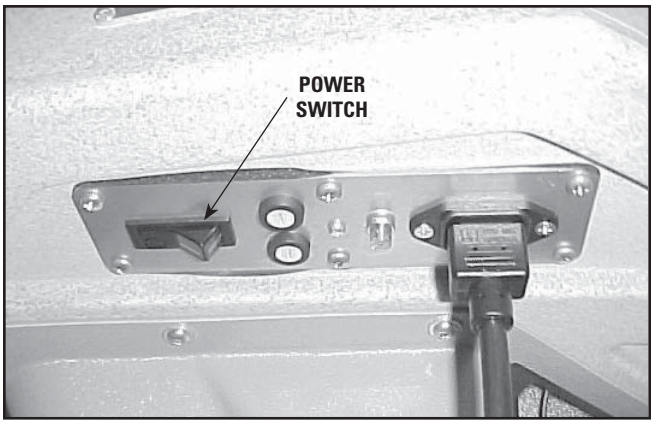

Turn unit power switch On.

Start the preheat function by depressing the "PREHEAT STANDBY" button on the control panel. After approximately 30 seconds, the Blue LED should illuminate.

VERIFYING TEMPERATURE CALIBRATION

After each change of Cellex media, perform a temperature check to ensure that calibration of unit has not changed.

The temperature displayed on the display is an average of the temperature throughout the media chamber. Because the media is fluidized by the movement of forced air, there are zones throughout the chamber. The temperatures measured in each zone may vary by ± 8° F or ± -13°C.

Once the Cellex has been changed and operated at 50% for 1 hour, turn off the unit and immediately remove the lid to the unit. With a calibrated thermometer, take a temperature reading in the following zones – approximately half way down from the top of the media.

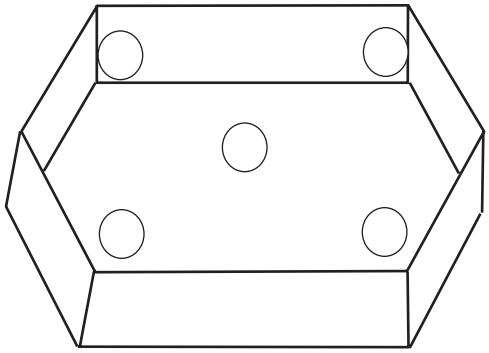

Calculate the average temperature by adding all five readings together and dividing by 5. The resultant number should reflect the set temperature ± 2° F or ± -17°C.

Pulse Mode Test

Tools & Equipment Required

Calibrated Stop Watch

Pulse Mode Test Procedures

Reset the factory defaults. Refer to the section entitled "Resetting Fluido DHT Factory Default Settings" on page 15.

Press the "PULSE MODE" button, the Blue LED should illuminate. Press the "TREATMENT START" button.

Using the calibrated stop watch, time the pulses of the unit while it is running. Record the readings taken and verify the settings you entered for the pulse.
The unit should pulse at approximately four seconds on, after reaching its maximum blower speed, and four seconds off.

Treatment Time Test

Tools & Equipment Required

Calibrated Stop Watch

Treatment Time Test

With the unit On, press and release the "Time" button. Using the down arrow, adjust the time to "1:00".

Press "TREATMENT START" and time with the Calibrated Stop Watch. Record the reading.

Treatment Time Spec . . . . . 1 minute ± 1 second

Air Speed Test

Airspeed Test Procedures

Turn unit On. Press "Treatment Start". While unit is running, press the "Air Speed" button. Use the Up and Down arrows to adjust the air speed to 100% and back down to 5%. Listen for the increase and decrease in the blower speed. Look for increased and decreased fluidization of the medium in the reservoir.

NOTE:

For proper operation and setting of the unit parameters outside the Factory Defaults, refer to the User Manual for the Fluido DHT.

Sleeves and Cellex®

⚠ WARNING

- Unplug the unit from the power source before attempting any removal or replacement procedures to prevent electrical shock.
- Follow electronic repair protocols for grounding to prevent damage to the electronic components from static electricity.

Refer to the Fluido DHT User Manual for the proper removal and replacement of the following items:

- Unit End Sleeves
- Unit Top Sleeves
- Cellex Medium
- Intake Filters

Control Panel PC Board

Tools & Equipment Required

Small Flat Blade Screwdriver

5/16 Open End Wrench

Removing the Control Panel PC Board

1. Remove the three retaining screws from the Control Panel Bezel.

2. Carefully remove the Bezel from the Control Panel.

3. Remove the four retaining nuts securing the Control Panel to its mounting base (two on each side).

4. Remove the Control Panel from the mounting base.

5. Remove the five wiring harnesses from the PC Board.

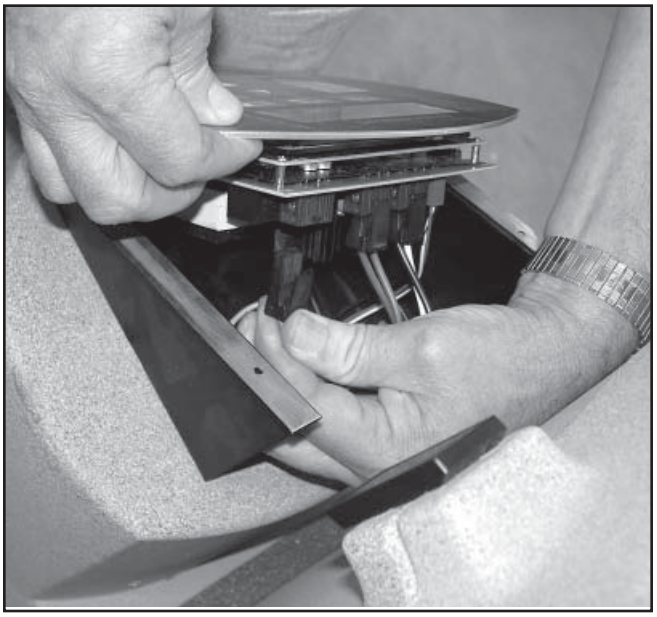

Replacing the Control Panel PC Board

To replace the control panel PC board, reverse steps 1 through 7 of "Removing the Control Panel PC Board" starting on page 17.

NOTE: Keep in mind the following when replacing the Control Panel PC Board:

- Attach the connector with the two brown wires to the heater terminal.
- Attach the connector with one brown wire and one blue wire to the line terminal.
- Attach the connector with one black wire and one white wire to the motor terminal.
- Attach the small, three-wire connector wires to the speed terminal.
- Attach the small, two-wire connector to the temperature terminal.

Fluido Heater

Tools Required

1/8 and 5/32 Allen Wrenches
3/8 Wrench
Wire Cutters

Removing the Fluido Heater

Before attempting to remove the Fluido Heater, you must complete steps 1 through 3 of "Removing the Muffler and Muffler Cover" on page 22. Next, complete steps 1 through 2 of "Removing the Fluido Motor" on page 17.

1. Remove the gasket from the motor and support assembly.
   NOTE: Once the gasket is removed, always replace with a new gasket.
2. Remove the two bolts that secure the motor housing mount bracket with the 1/8 Allen Wrench. Remove the motor housing mount bracket from unit.

3. Remove the two pieces of insulation.
   NOTE: Make sure that the insulation is placed back into the unit correctly or the insulation may burn.

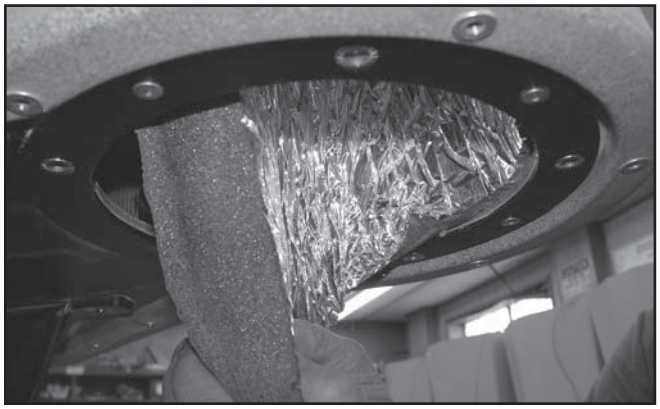

4. Slowly remove the heater enclosure assembly.

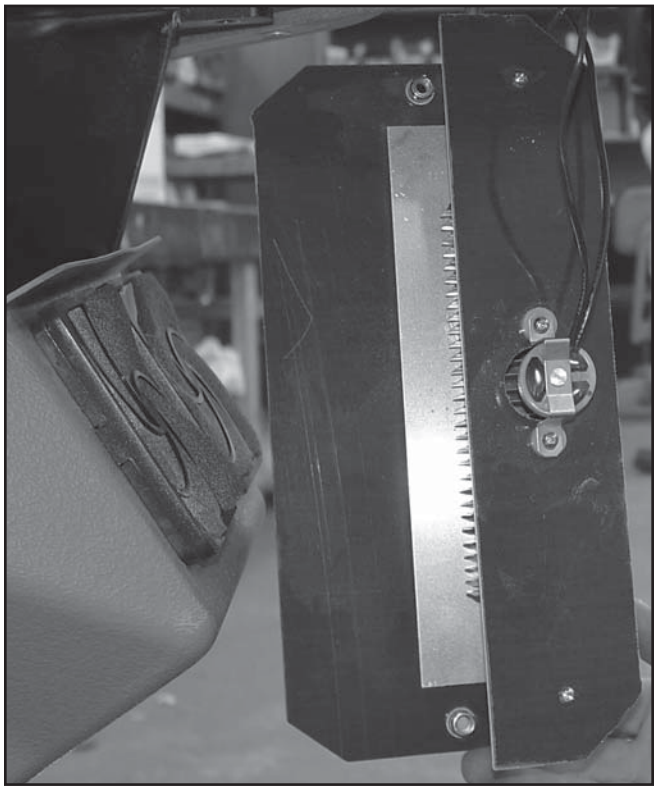

5. Using a 3/8 wrench, remove the three (two blue and one brown) harnesses from the heater enclosure assembly.

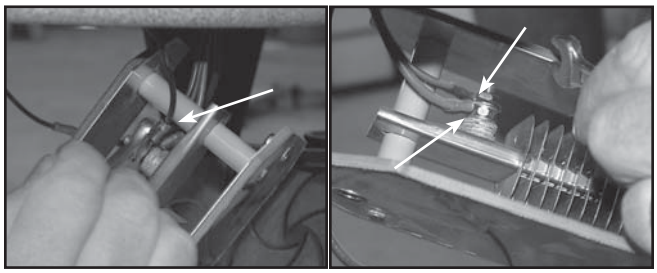

6. Using wire cutters, cut the wire between the brown and black wire from the heater enclosure assembly.

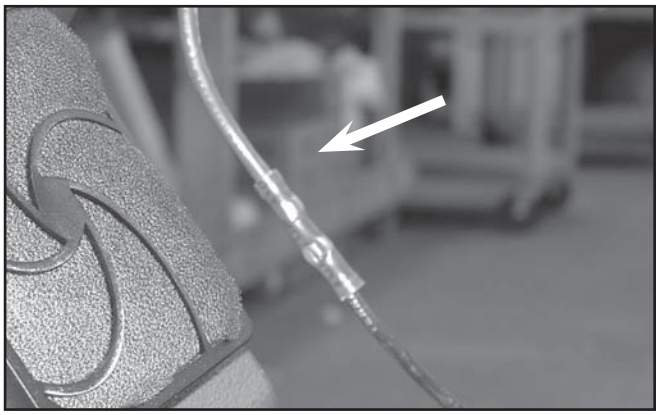

Replacing the Fluido Heater

To replace the Fluido heater, reverse steps 1 through 6 of "Removing the Fluido Heater" on page 19 (i.e., instead of cutting wires, simply solder or reattach them). Ensure all connections are insulated.

NOTE: Make sure that the insulation is placed back into the unit correctly or the insulation may burn.

Fluido Diffuser

Tools Required

Wet/Dry Vacuum
#2 Phillips Screwdriver
1/8 Allen Wrench

Removing the Fluido Diffuser

1. Remove lid completely from unit.
2. Using the wet/dry vacuum, remove the Cellex from the tub.
3. Remove the seven screws from the perforated metal at the bottom of the tub.

⚠ CAUTION

Make certain to vacuum the screw heads at the base of the tub. This will ensure that Cellex will not fall in the standoff's holes, and you will not round out the heads of the screws.

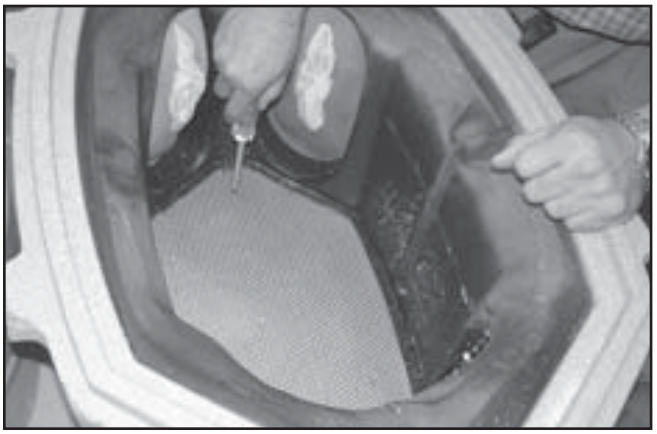

4. Using the wet/dry vacuum, remove the newly exposed, excess Cellex.

NOTE: When vacuuming, be careful not to damage the temperature sensor.

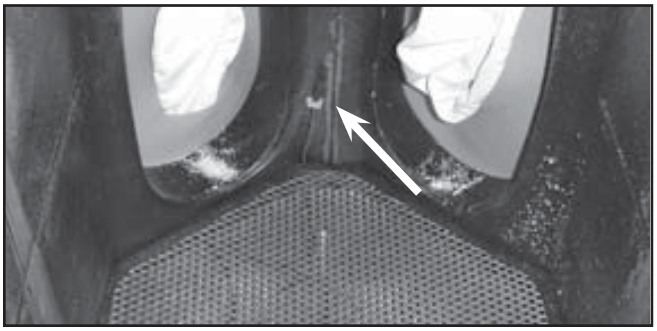

5. Remove the rubber tub insert closest to the control panel. Then, remove the other rubber tub insert.

6. Using the wet/dry vacuum, remove the newly exposed, excess Cellex.

⚠ CAUTION

Make sure to remove the excess Cellex from the heads of the hex screws to avoid rounding out the heads of the screws.

7. Remove the ten hex screws from the bottom of the tub.

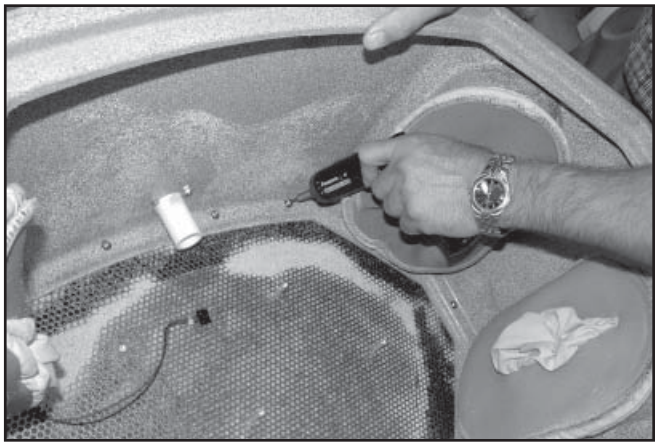

9. Remove the perforated metal.
10. Remove the diffuser baffle.
11. Remove the diffuser foam.

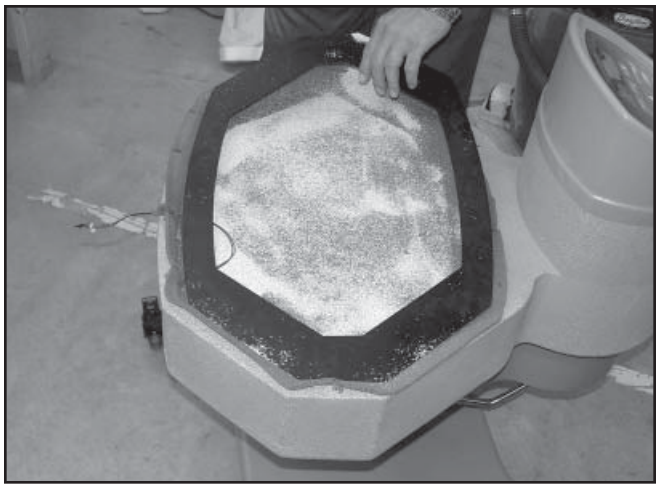

⚠ CAUTION

Make certain that you do not spill any Cellex into the heater enclosure cavity.

12. Remove bottom (and final) piece of perforated metal.
13. Using the screwdriver, remove the ground screw.

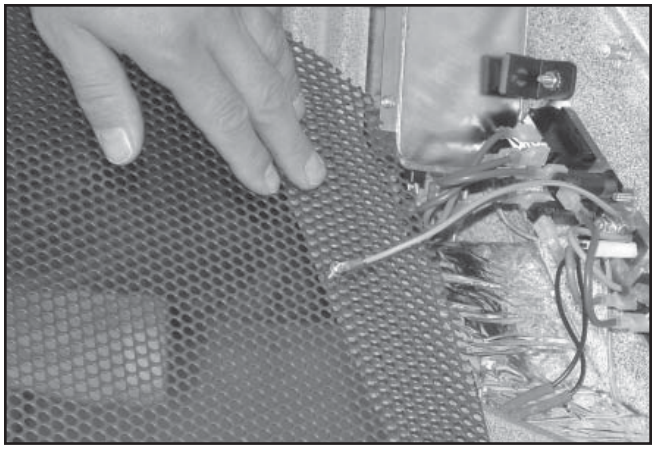

Replacing the Fluido Diffuser

To replace the Fluido diffuser, reverse steps 1 through 13 of "Removing the Fluido Diffuser" on pages 20-21. After replacing the Fluido diffuser, trim excess foam with razor knife while stretching away from the tub.

Fluido Motor

Tools Required

1/8 and 5/32 Allen Wrenches

Removing the Fluido Motor

Before attempting to remove the Fluido motor, you must complete steps 1 through 3 of "Removing the Muffler and Muffler Cover" on page 22.

1. Remove the five screws outside of the motor support plate, being sure to hold the plate while removing the last screw.

⚠ CAUTION

Hold the motor support plate before removing the last screw. Otherwise, the motor may fall from the housing.

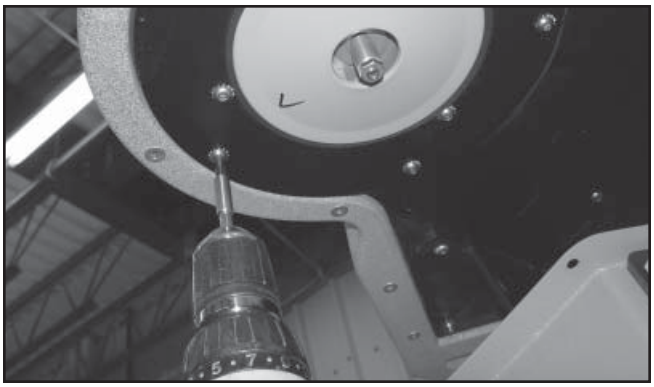

2. With one hand, hold the motor while using your other hand to disconnect the motor wiring from the harness. See the following 2 figures.

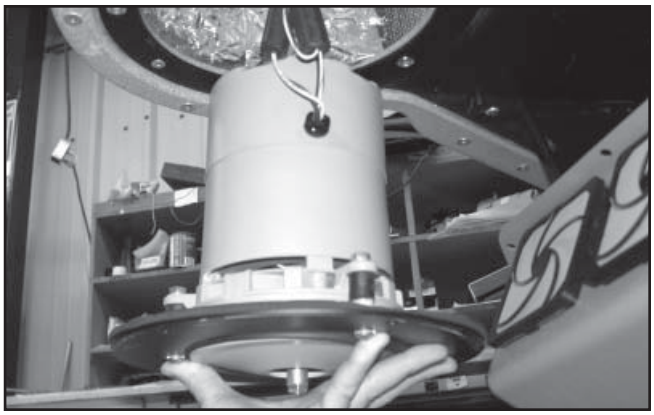

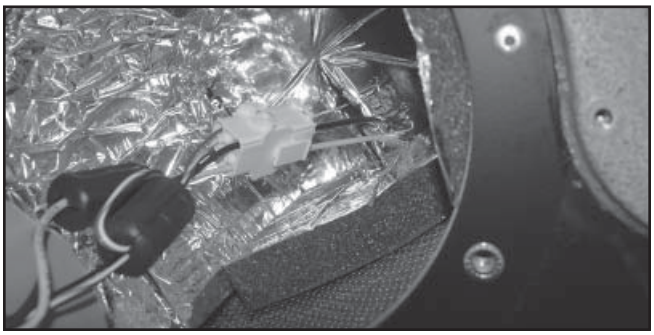

⚠ CAUTION

Be careful not to damage the metal shaft on the end of the motor. See the following figure.

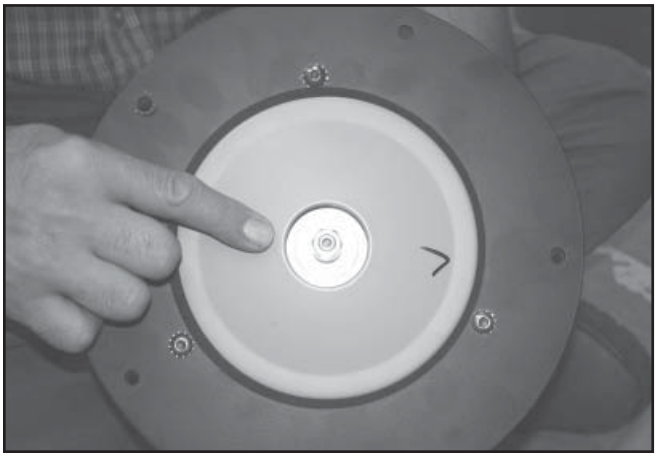

Replacing the Fluido Motor

To replace the Fluido Motor, reverse steps 1 and 2 of "Removing the Fluido Motor" on page 21.

Muffler and Muffler Cover

Tools Required

1/8 Allen Wrench

Removing the Muffler Cover and Muffler

1. Remove the 14 screws that secure the muffler cover.

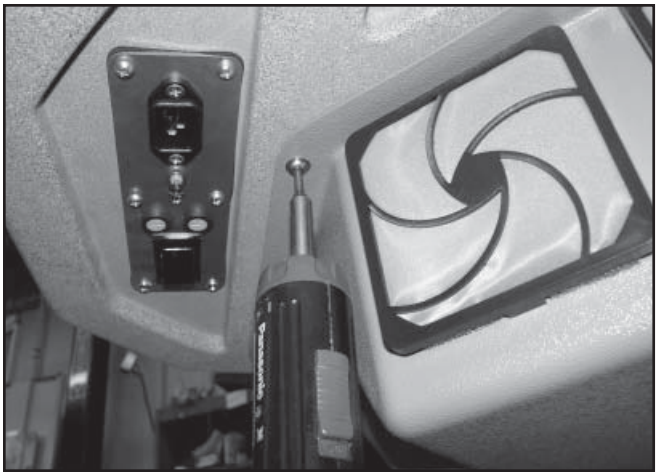

2. Slide the muffler cover down on the shaft.

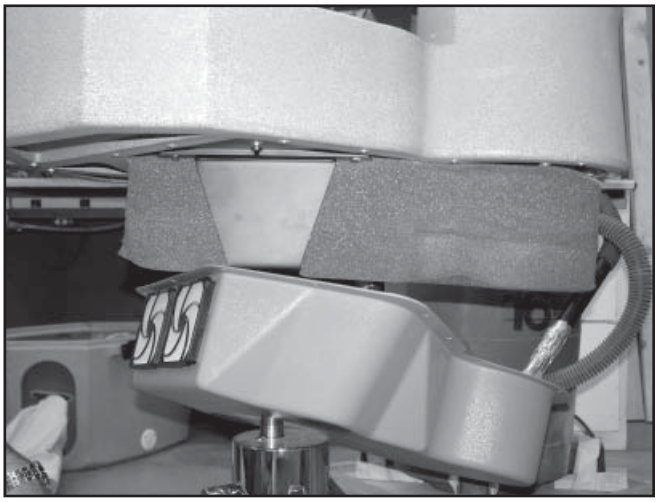

3. Remove the foam insert from inside the muffler cover.

NOTE: Notice the hole in the foam insert. You will need to line up this hole with the Morris taper on the shaft when you re-assemble the muffler.

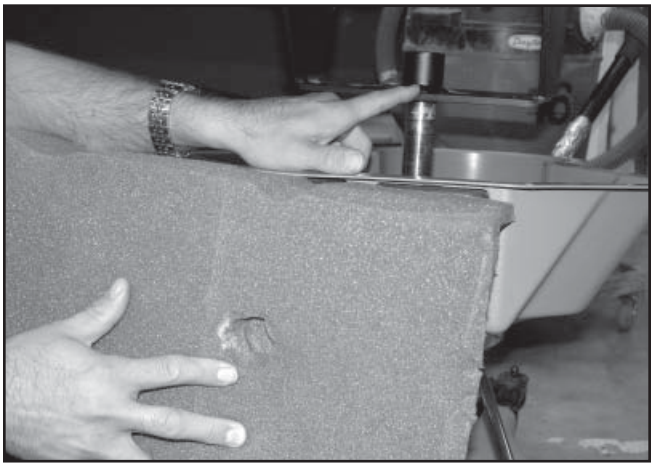

Replacing the Muffler Cover and Muffler

To replace the muffler and muffler cover, reverse steps 1-3 of "Removing the Muffler Cover" on this page.

NOTE: After re-installing the muffler, remove the air filters to ensure that the muffler is not obstructing the air intakes.

Casters

Materials and Tools Required

9/16 Wrench
(4) Caster - 14135
Base Frame- 14104
(4) 3/8-16 Black Acorn Nuts - 14146

Removing the Casters

1. Make sure casters are locked by pressing the metal flap until the wheel does not move. This will prevent the shaft of the caster from moving while you are attempting to remove it.

2. Remove each of the four 3/8-16 black acorn nuts.
3. Lift the base to remove each of the shafts of the four casters from the unit.

Replacing the Casters

1. Make sure caster is locked before attempting to install.
2. Place one caster on each corner of the base, and attach with four 3/8-16 black acorn nuts.

Part No.	Description
14105	BASE ASSEMBLY FLUIDOTHERAPY
14111	PATIENT TUB LID FLUIDO DHT
14113	LID LATCH FLUIDO DHT
14116	SCREW #2 X 3/8 PAN HD. PHIL.
14117	DISTRIBUTOR PLATE FLUIDO DHT
14118	PLEXIGLASS TRIM FLUIDOTHERAPY
14119	FOAM DISTRIBUTOR PLATE FLUIDOTHERAPY
14120	TUB DRAIN PLUG FLUIDOTHERAPY
14122	6-32 X 1/2 OD X1 LG CERAMIC STD. OFF
14123	6-32 X 1/2 OD X 1-1/2 LG CERAMIC STD.
14124	GASKET TUB LID FLUIDOTHERAPY
14125	MANUAL USER FLUIDOTHERAPY
14128	MANUAL SERVICE FLUIDOTHERAPY
14130	SLEEVE ASSEMBLY FLUIDO DHT
14135	CASTER TENTE 006874 FLUIDO DHT
14136	FOAM MUFFLER FLUIDO DHT
14137	MUFFLER COVER FLUIDO DHT
14139	BOTTOM W/ MOTOR HOUSING FLUIDO DHT
14146	ACORN NUT FLUIDO DHT
14148	SCREW 10-32 x 3/4 BUTT. HD. SOC
14150	SCREW 10-32 X 1 BUTT HD SOC
14151	SWITCH PLATE GASKET FLUIDO DHT
14160	SCREW 10-32 X 1/2 BUTT HD SOC
14161	HEX STANDOFF 6-32 X .875 ALUM.
14162	MULTI STACK ADAPTER
14166	USER INTERFACE COVER FLUIDO DHT
14168	PLASTIC COVER FLAT FLUIDO DHT
14169	SLEEVE RETAINING CLIP FLUIDO DHT
14170	POWER CORD FLUIDO DHT
14171	SWITCH PLATE FLUIDO DHT
14174	GASKET MOTOR MOUNTING PLATE
14175	ELBOW SLEEVE FLANGE FLUIDO DHT
14188	SPONGE GASKET 3/4" X1/4" ADHES.
14189	HARNESS CONTROL POWER SWITCH
14202	HARNESS CONTROL TO HEATER SUB
14203	HARNESS HEATER TO INDICATOR
14204	HARNESS FUSE TO RECEPTACLE
14206	HARNESS RECEPTACLE TO POWER SWITCH

Part No.	Description
14207	HARNESS O.T. TO STAT H.E.
14208	HARNESS MOTOR SPEED CONTROL
14209	LINE FILTER BRACKET
14211	HARNESS CONTROL INTERCONNECT
14213	HARNESS GROUND 7"
14214	HARNESS GROUND 24"
14215	HARNESS TEMP SENSOR
14219	1/4-20 X 5/8 SANDWICH MOUNT
14220	10 x 24 INSULATION MOTOR HOUSING
14221	5' X 4" INSULATION MOTOR HOUSING
14222	5" X 5" INSULATION MOTOR HOUSING
14223	9" X 9" INSULATION MOTOR HOUSING
14225	HARNESS FUSE TO POWER SWITCH 230V
14226	HARNESS POWER SWITCH TO LINE FILTER
14227	HARNESS O.T. STAT TO H.E.
14228	HARNESS LINE FILTER GROUND TO CHASSIS
14229	ELBOW SLEEVE ASSEMBLY
14230	INLET FILTER 19155K22
14231	FILTER NYLON MESH 3-5/8" SQ.
14232	GLIDE ETS 32 X 50 D80153
14233	USER INTERFACE BRACKET PAINTED
14234	MOTOR HOUSING SUPPORT PAINTED
14235	FOAM INSERT
14236	MOTOR SUPPORT PLATE PAINTED
14237	SET SCREW 6-32 X 3/4 91375A151
14238	SPACER NYLON 1/2 ODX1/4 ID x 5/8 94639A143
14239	SCREW #1 X 3/8" 90253A033
14240	POP RIVET 1/8 X 5/8 ALUMINUM 97447A135
14241	CAPTIVE STUD 6/32 X 3/8 93580A016
14244	RIVNUT 10-32 S10P175
14245	STRAIN RELIEF PLATE FLUIDO DHT
14247	230V. MOTOR HOUSING ASSY.
14251	HYDRAULIC LIFT (CHROME) 4500
14253	FUSE HOLDER SCHURTER
14254	INLET AC FAST CONNECT
14255	10 AMP. 5MM X 20MM (FUSE)220V 3 AG SLOW BLOW
14259	2-56 X 1/4" PAN HD.PHIL PLT.
14260	MOTOR ASSY. 120V

REPLACEMENT PARTS

Part No.	Description
14261	MOTOR ASSY. 230V
14262	HARNESS RECP. TO SWITCH PLATE
14263	HARNESS RECP. GROUND TO GROUND
14268	TOP DIFFUSER FLUIDO DHT
14269	DIFFUSER AIR BAFFLE FLUIDO DHT/24 GA. CARBON
14270	DIFFUSER AIR BAFFLE FLUIDO DHT/ADHESIVE BACKED FOIL
14272	HOUSING BRACE SPACER
14274	HOUSING BRACE (PAINTED #)
14275	FOAM INSERT
14276	POWER SWITCH
14277	ADAPTER 1/8 NPT 15090-1
14279	HEATER INDICATOR LIGHT BLUE 230V
14285	POP RIVET 1/8"
14286	FICHE PAPER 10 MIL THK.
14287	FITTING ADAPTER 1/8 TO 10-32 15090-1
14288	HEATER INDICATOR LIGHT BLUE 120V
14291	THERMAL OVER TEMP SWITCH
14299	CONTROL PNL. ASSY 120V
14300	MOTOR ASSY 230V
14301	MOTOR ASSY 120V
14302	MOTOR HOUSING WARNING LABEL
14304	1" ALMN. STANDOFF
31498	900 WATT HEATER FINNED STRIP 120V
31506	900 WATT HEATER FINNED STRIP 230V
14309	230V HEATER ASSEMBLY
14308	120V HEATER ASSEMBLY

Base Assembly-
120V and 230V

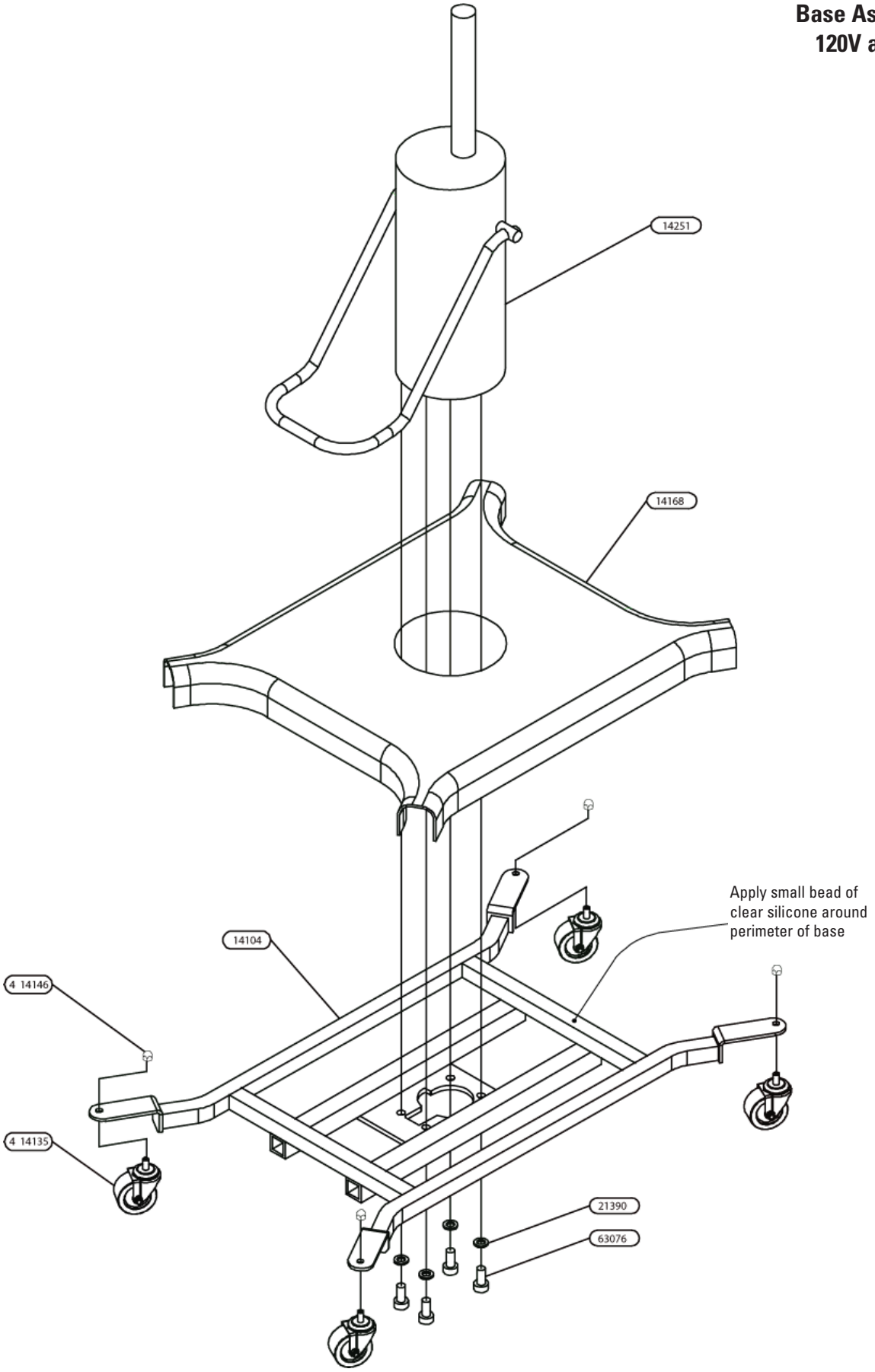

Control Panel Assembly- 120V and 230V

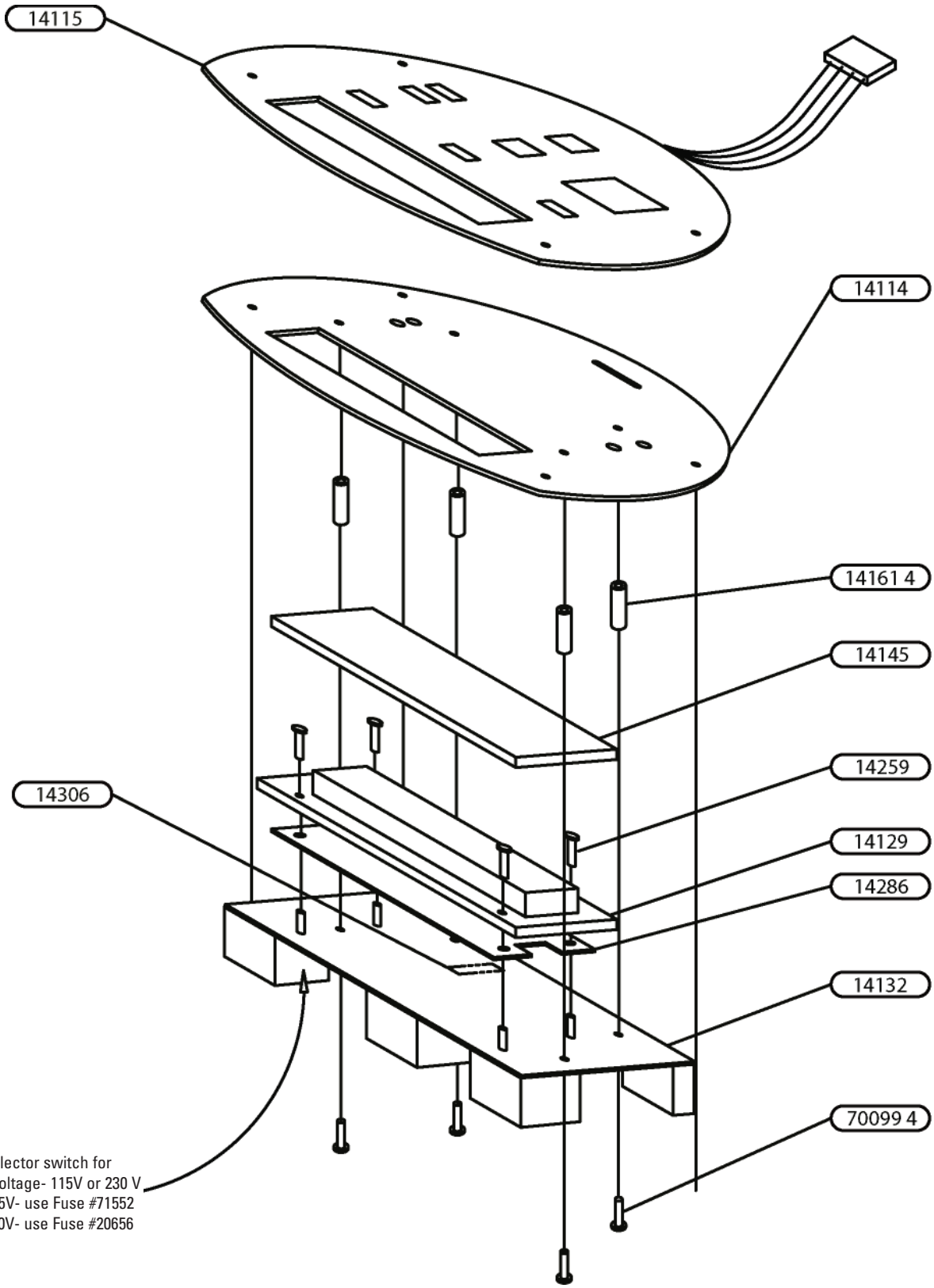

Note:
(1) Set selector switch for desired voltage- 115V or 230 V
(2) For 115V- use Fuse #71552
For 230V- use Fuse #20656

**Lid Assembly-
120V and 230V**

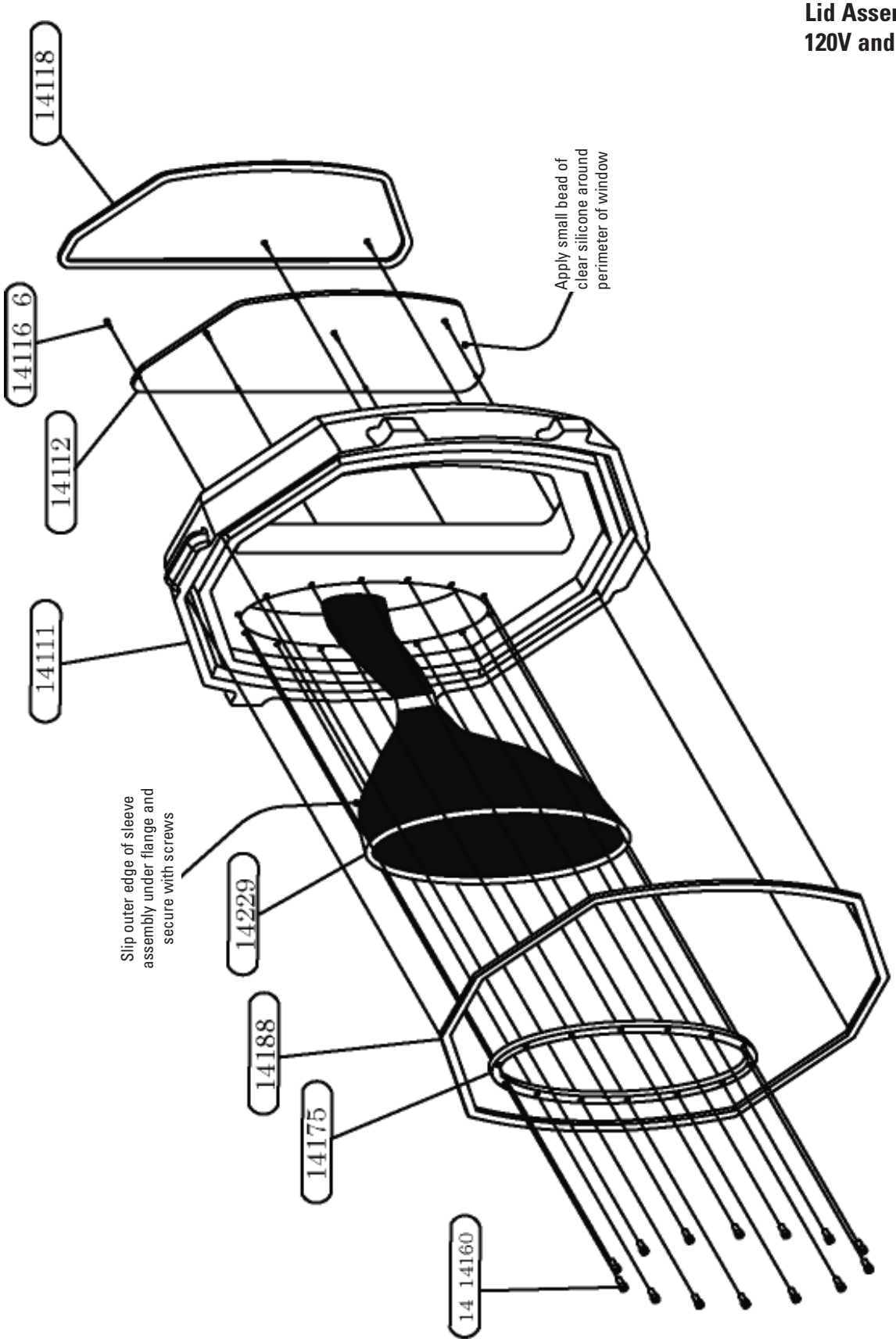

Switch Plate Assembly - 120V

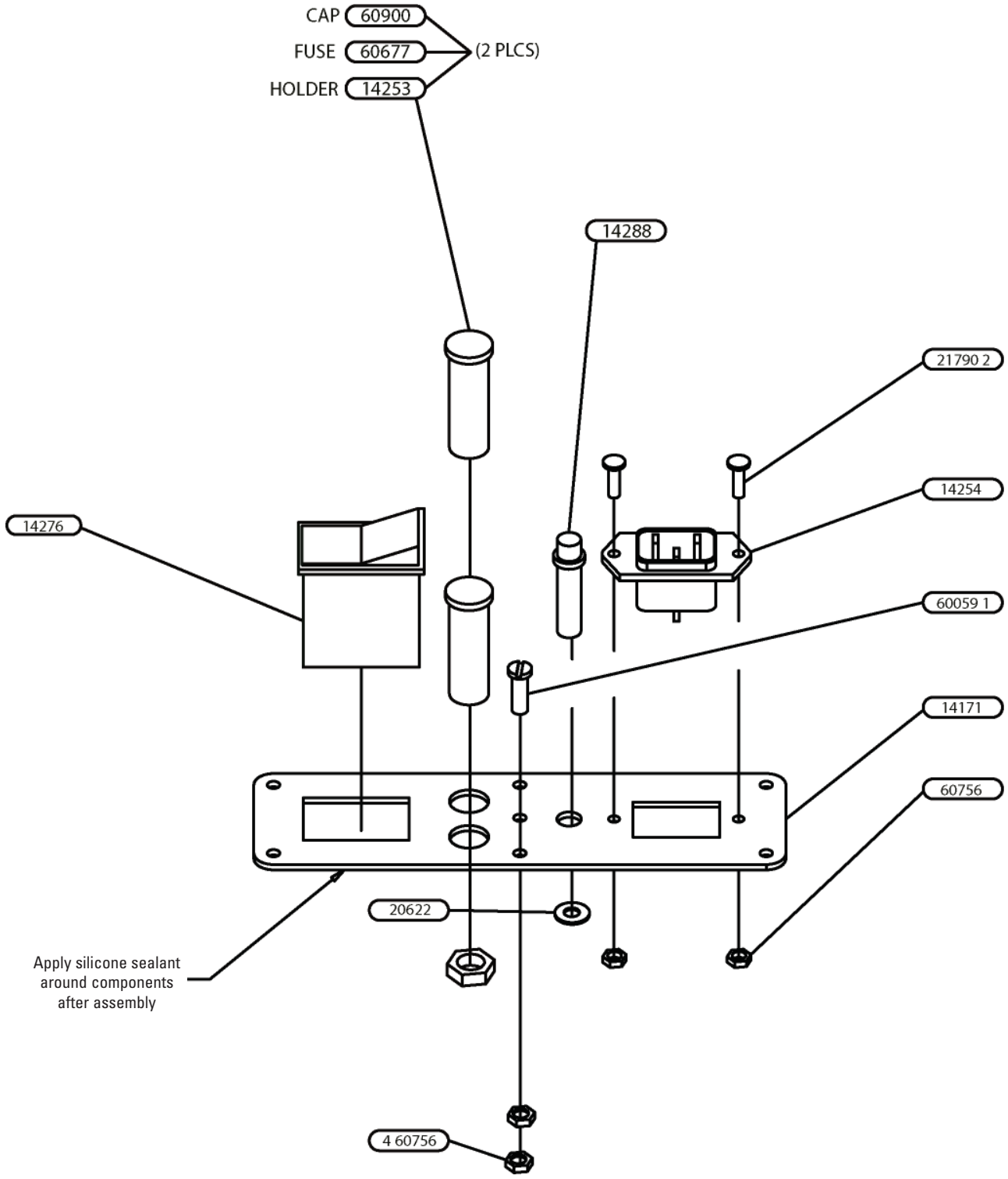

Switch Plate Assembly-230V

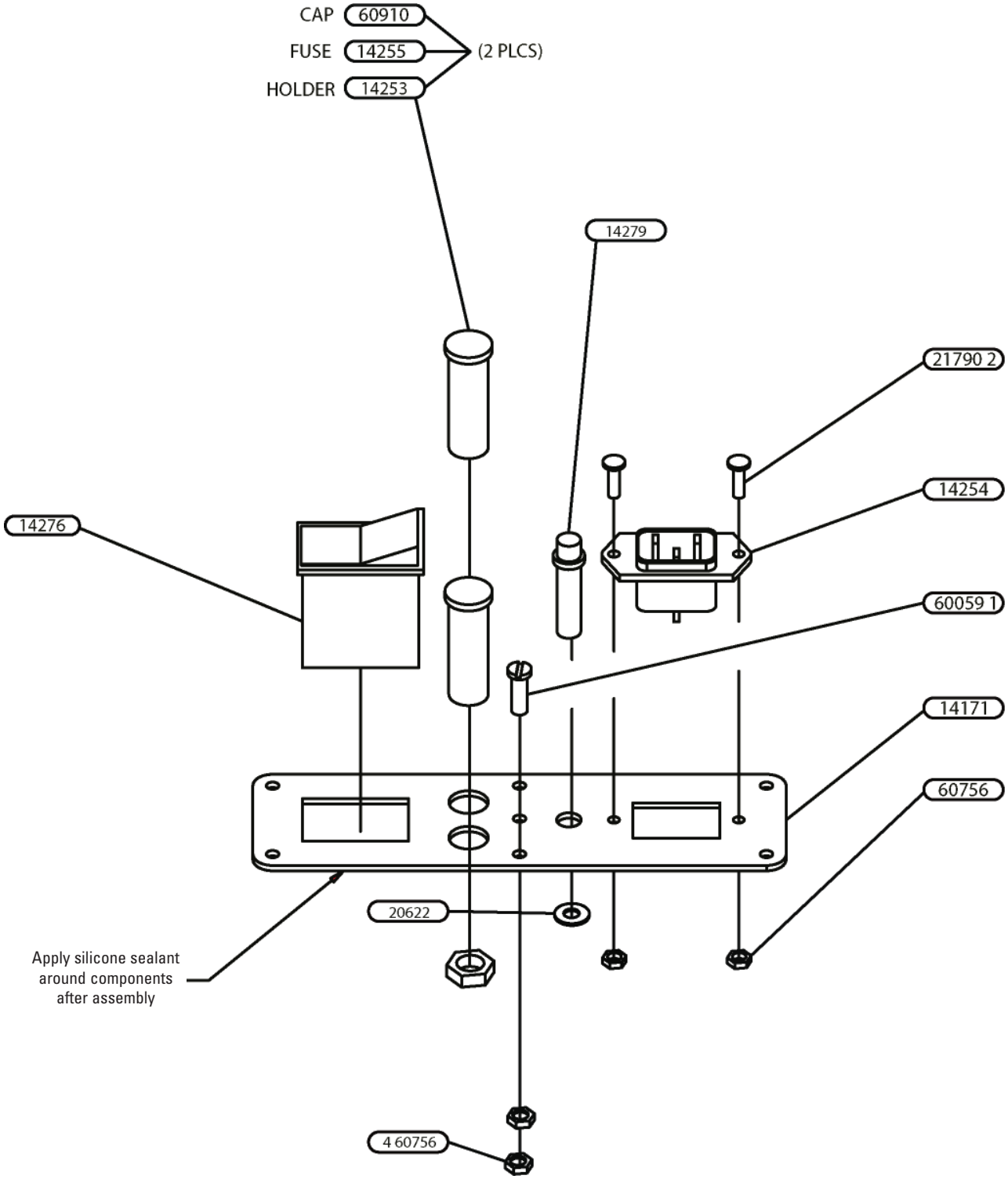

Wiring Diagram-120V

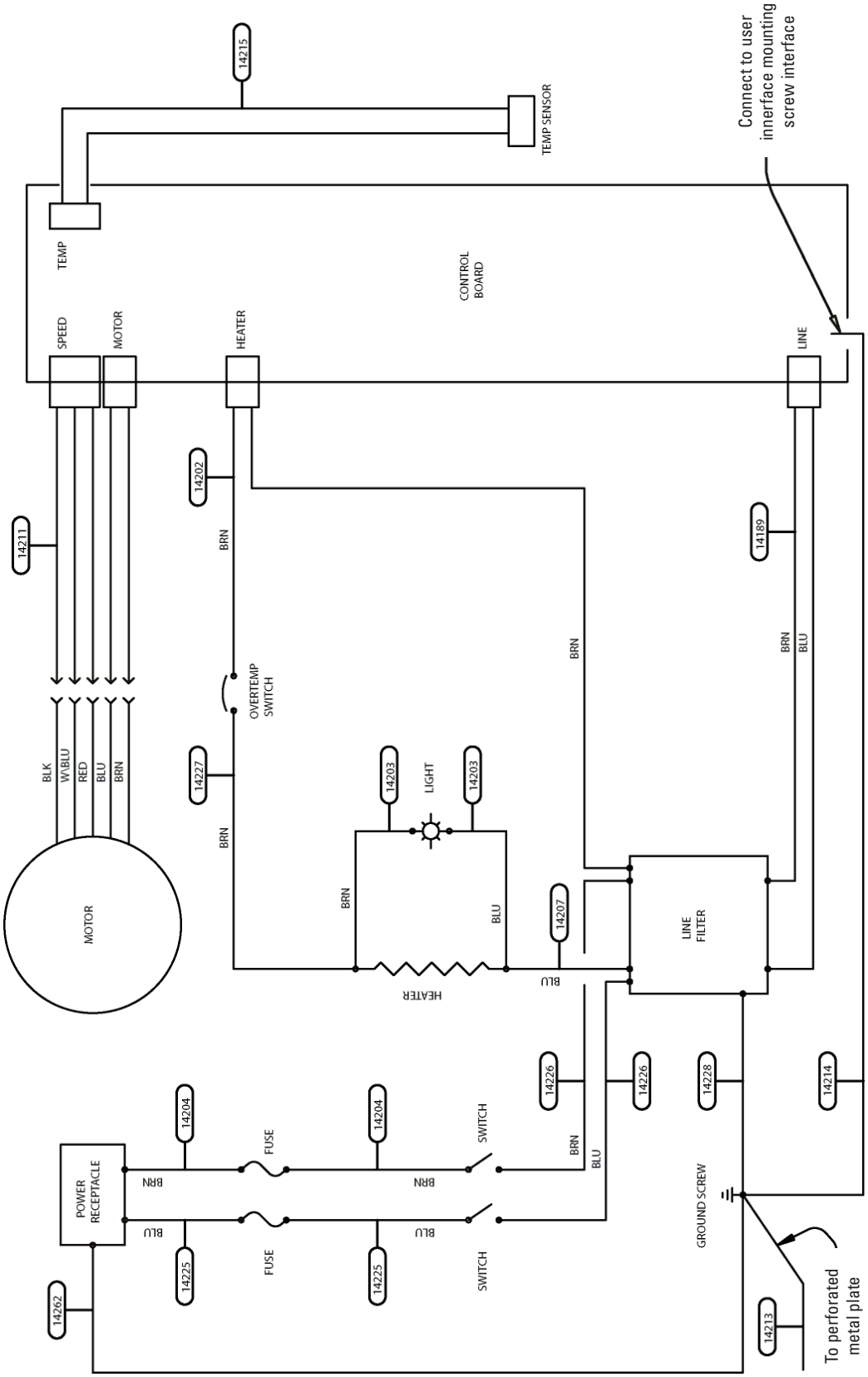

Wiring Diagram-230V

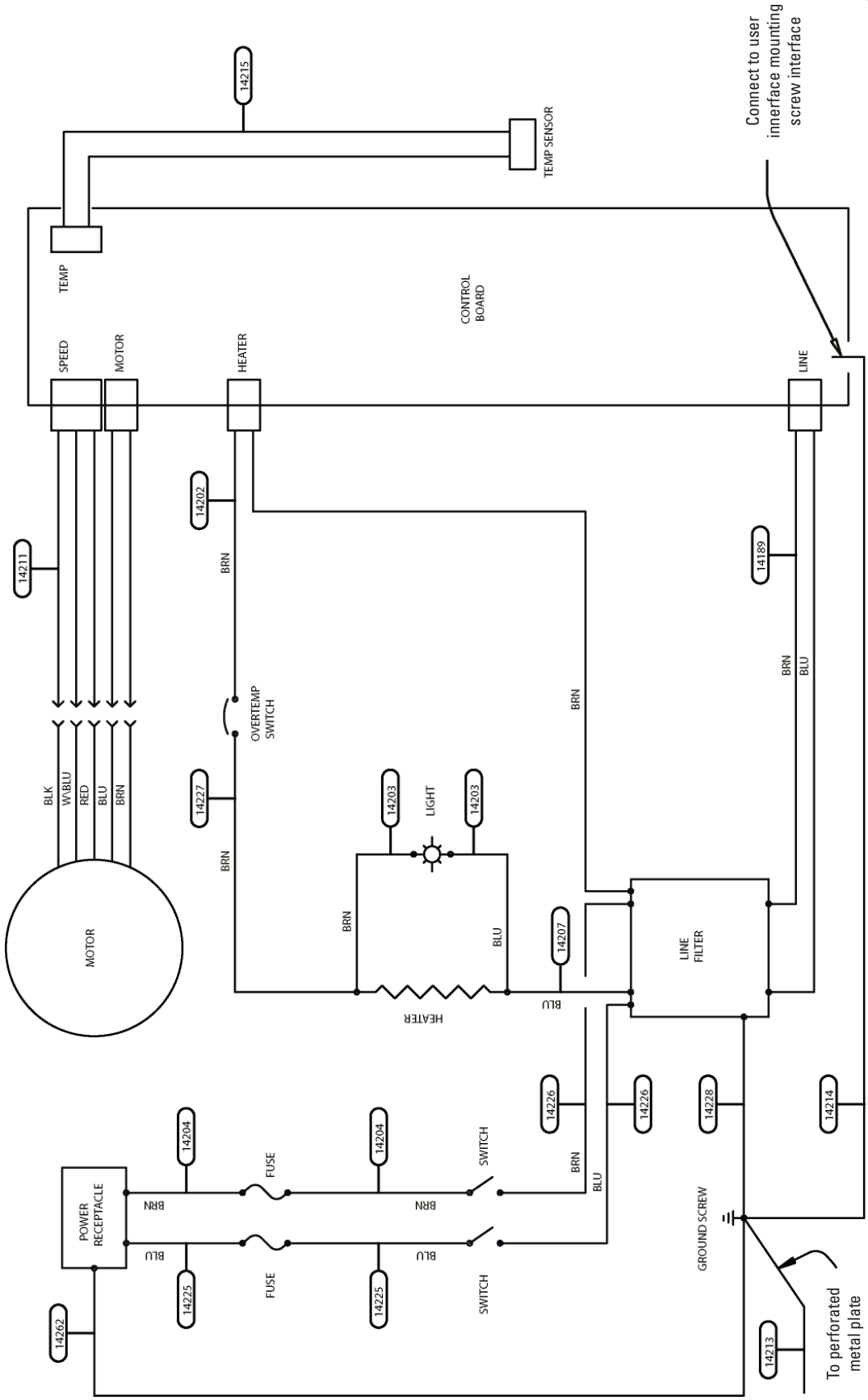

Heater Enclosure Assembly-120V

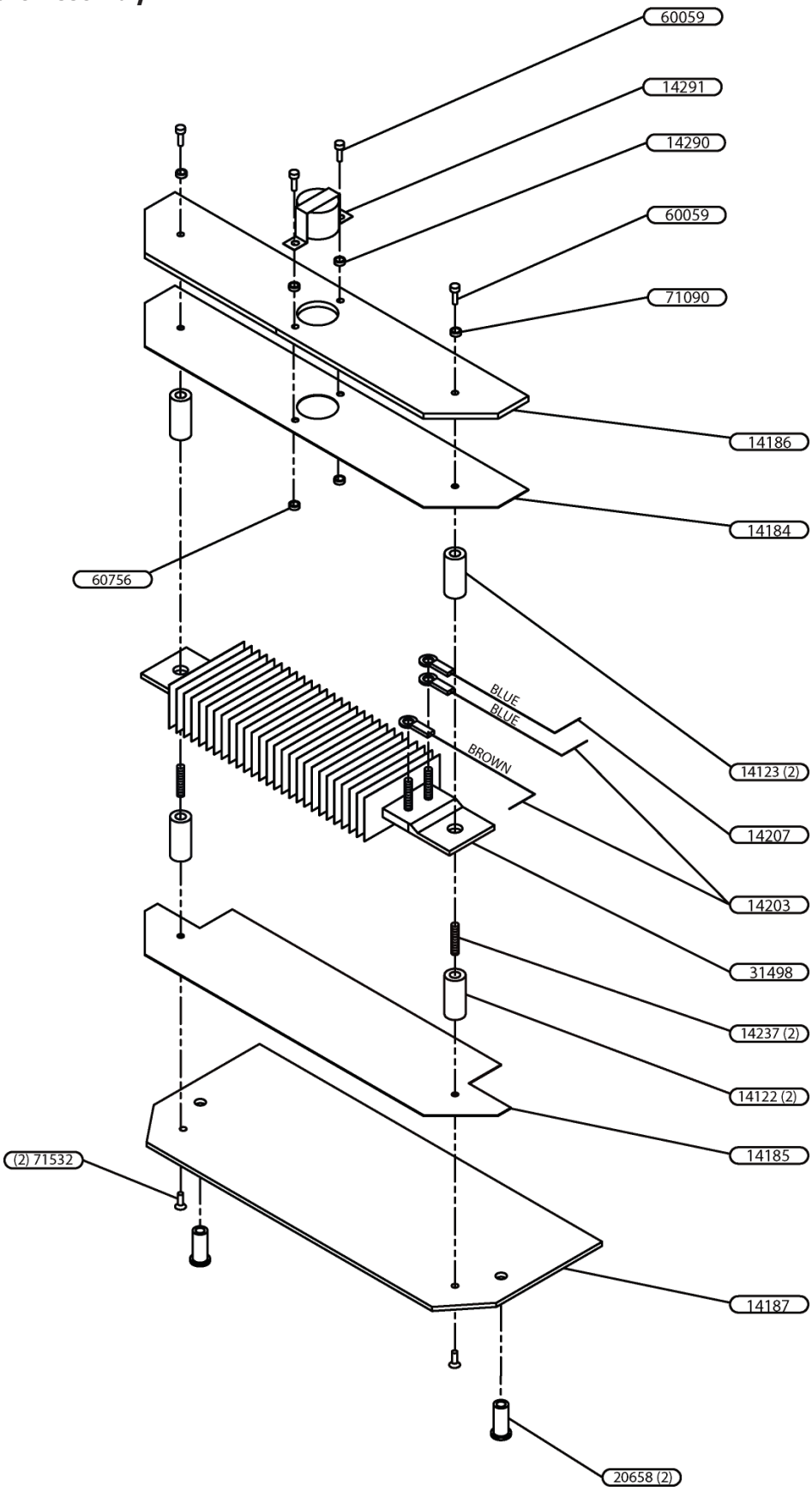

Heater Enclosure Assembly-230V

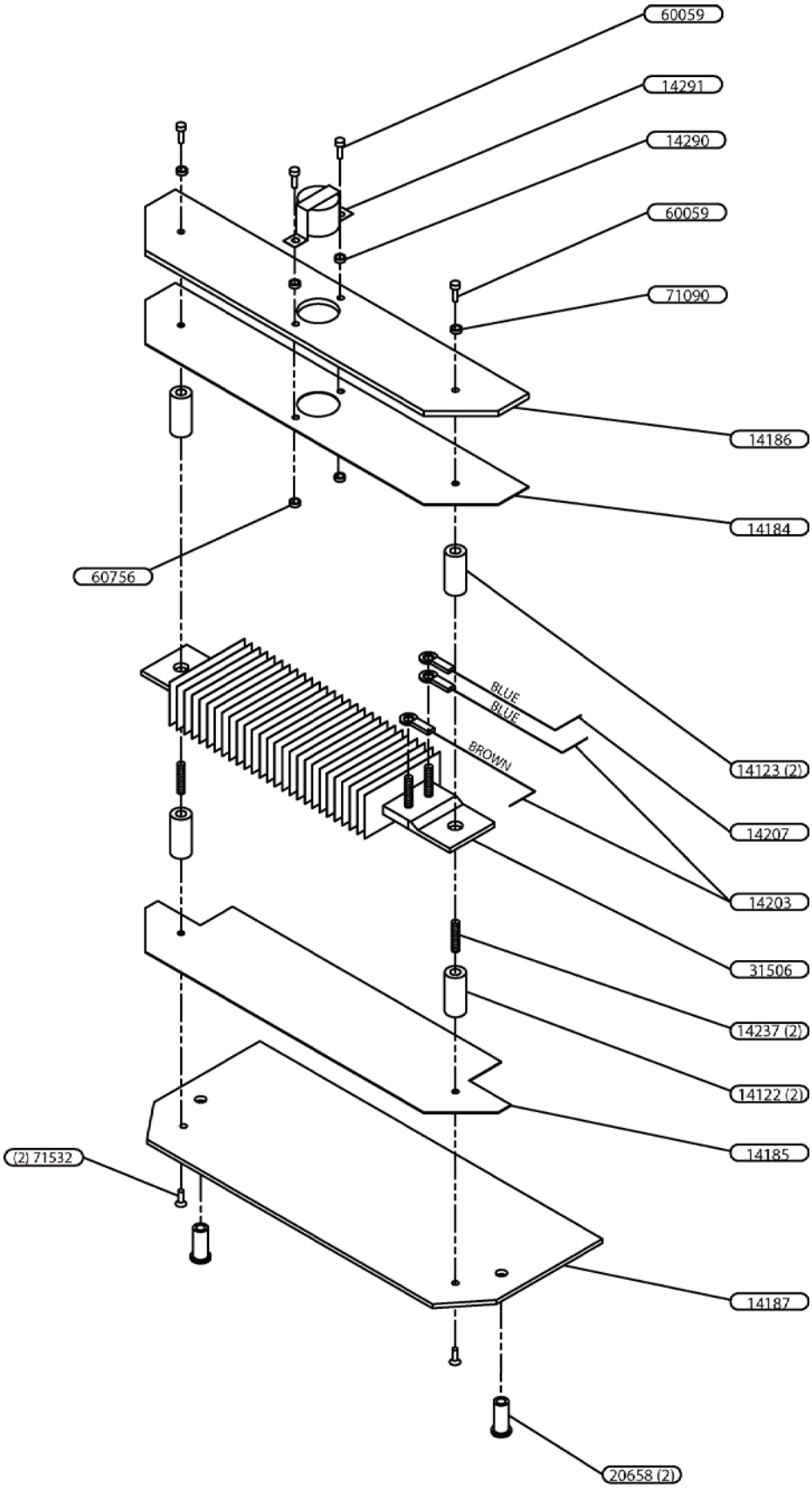

Motor & Support Assembly-120V

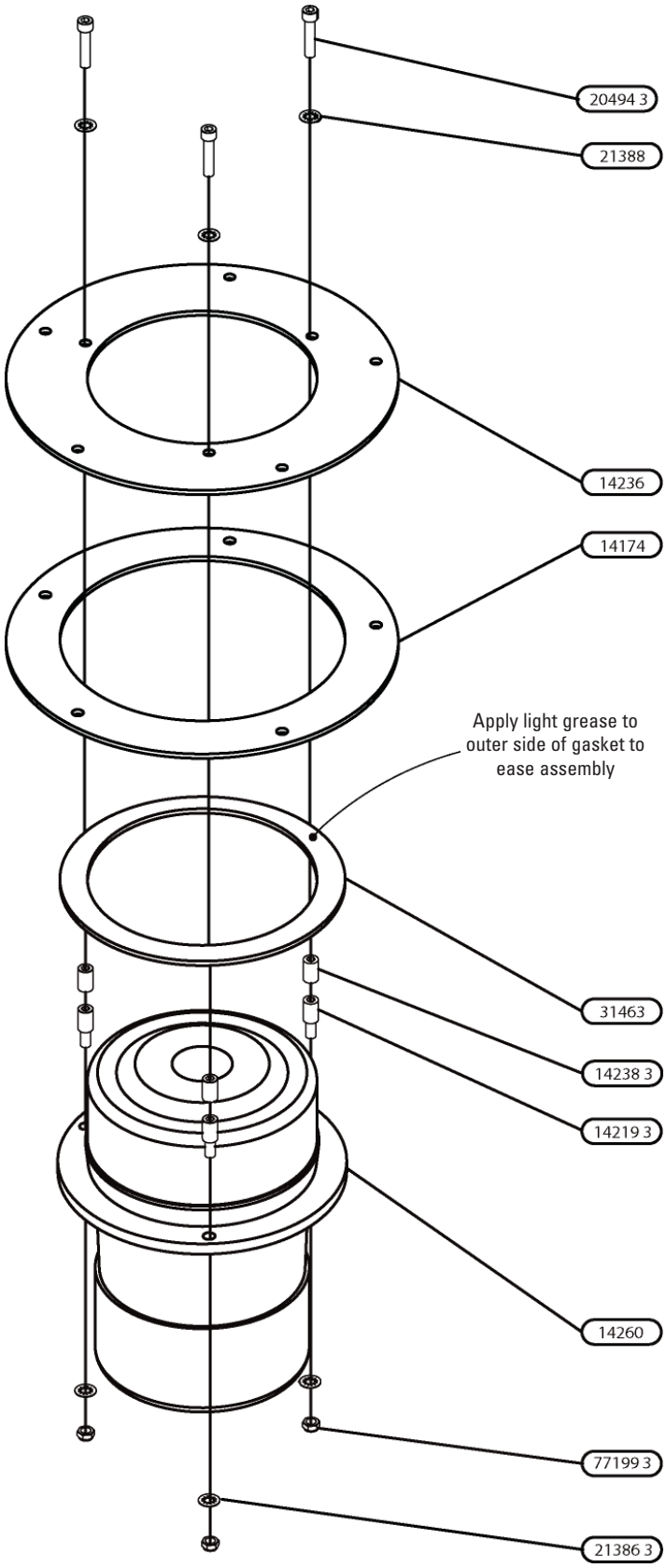

Motor & Support Assembly-230V

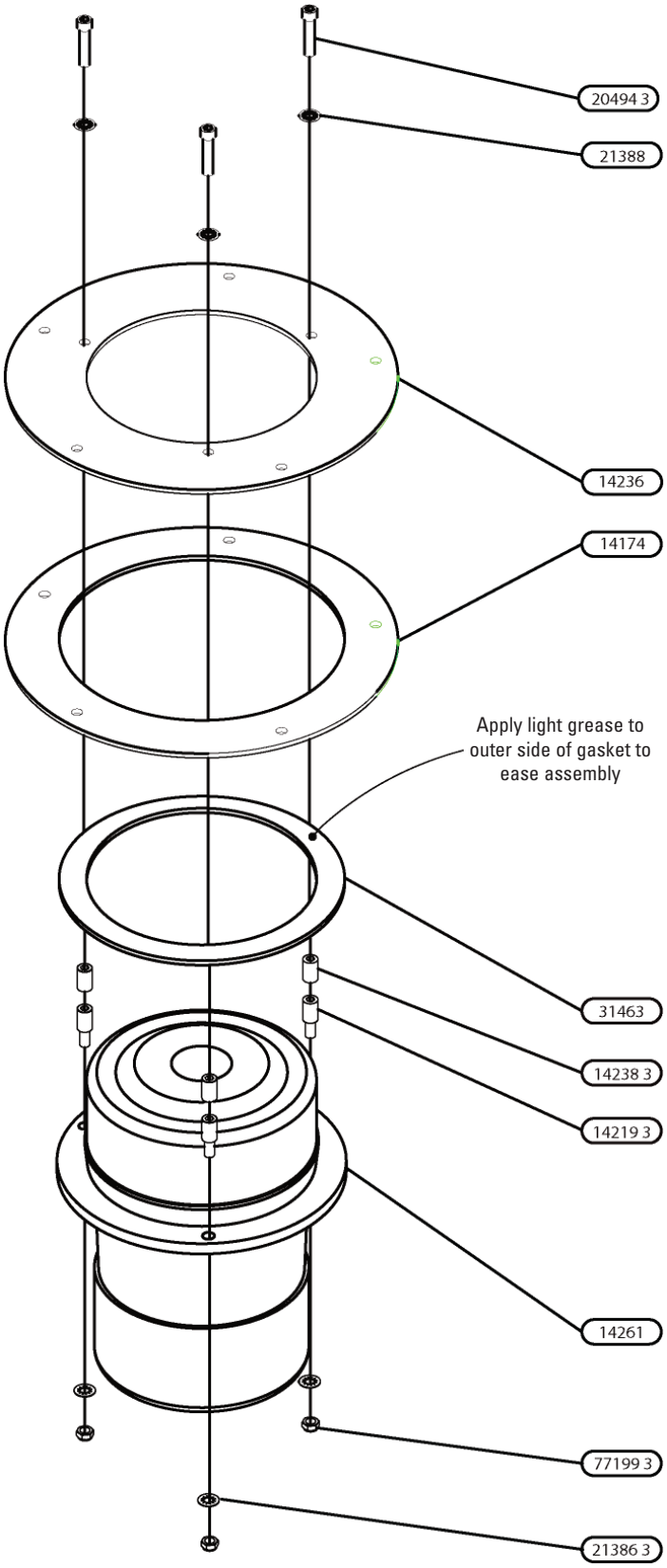

Motor Housing Assembly-
120V

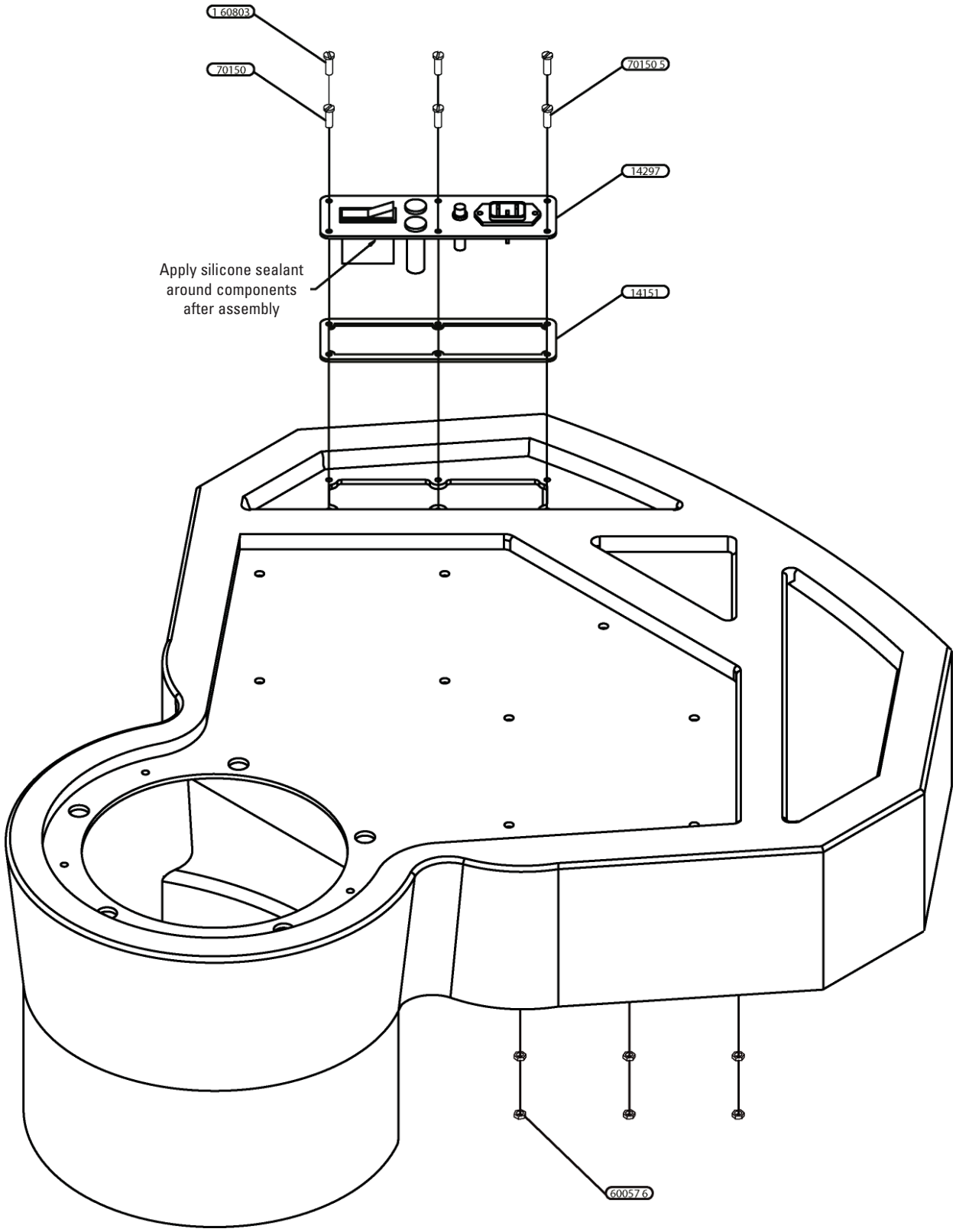

Motor Housing Assembly-230V

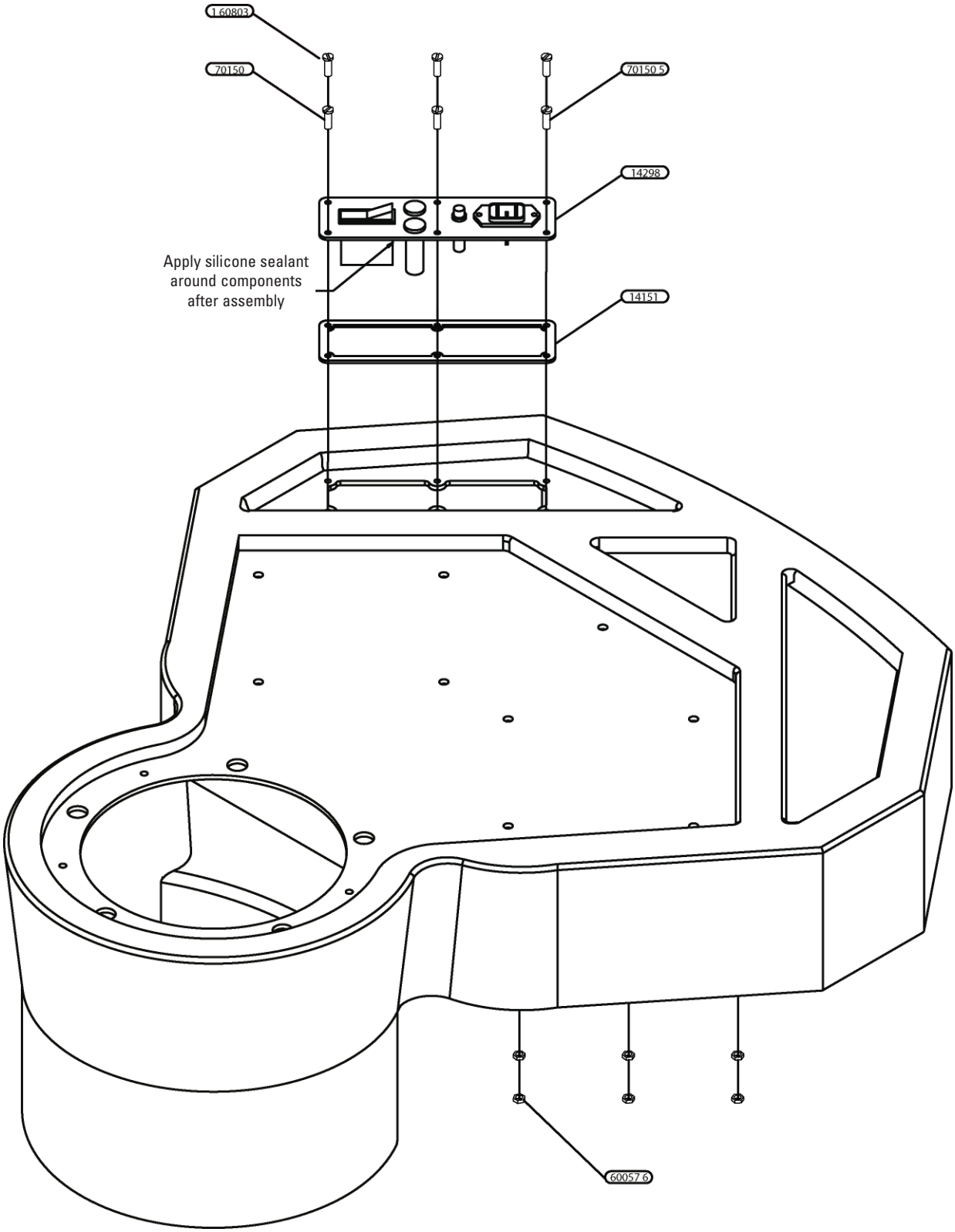

Motor Housing Assembly-
120V

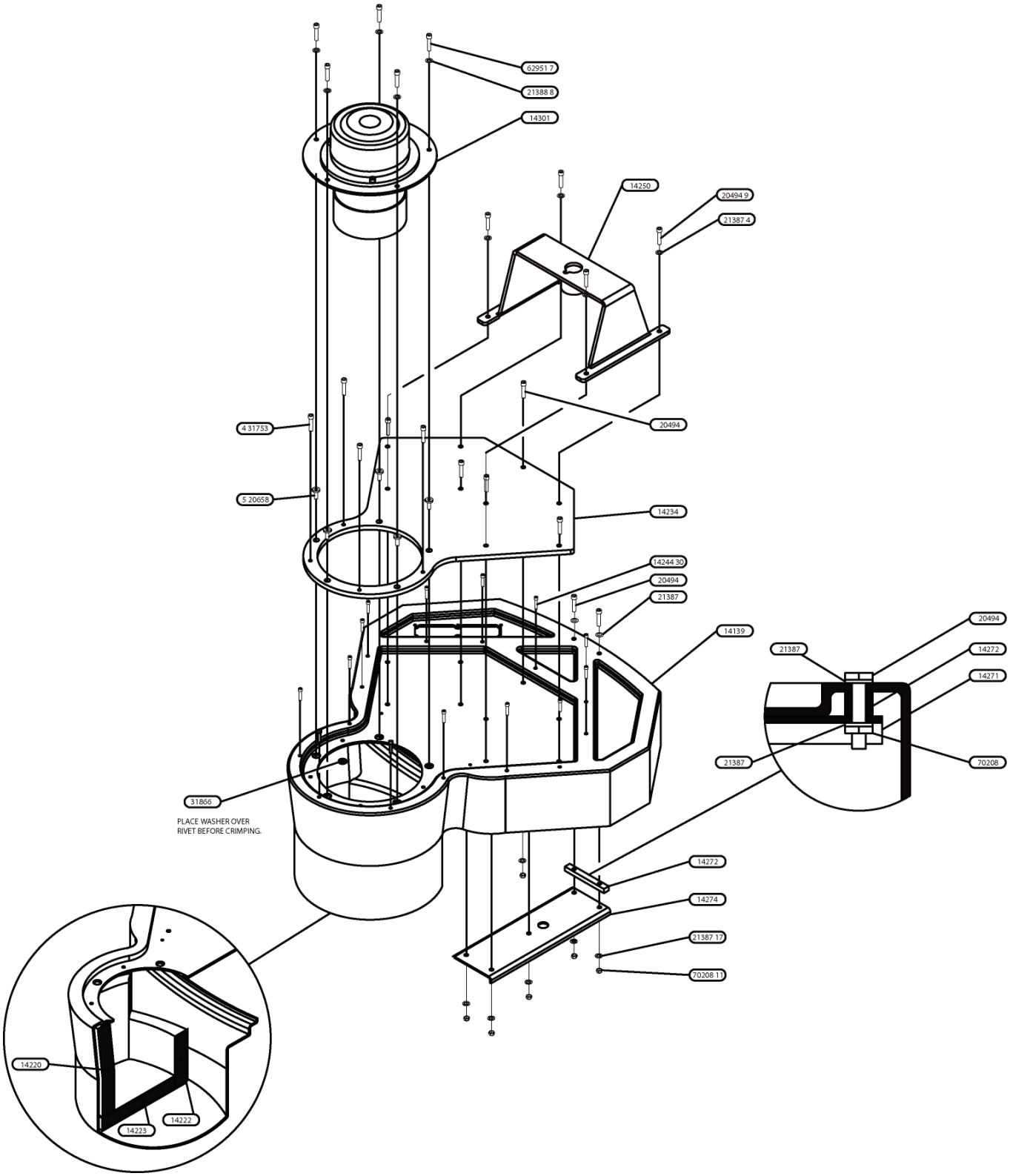

Motor Housing Assembly-230V

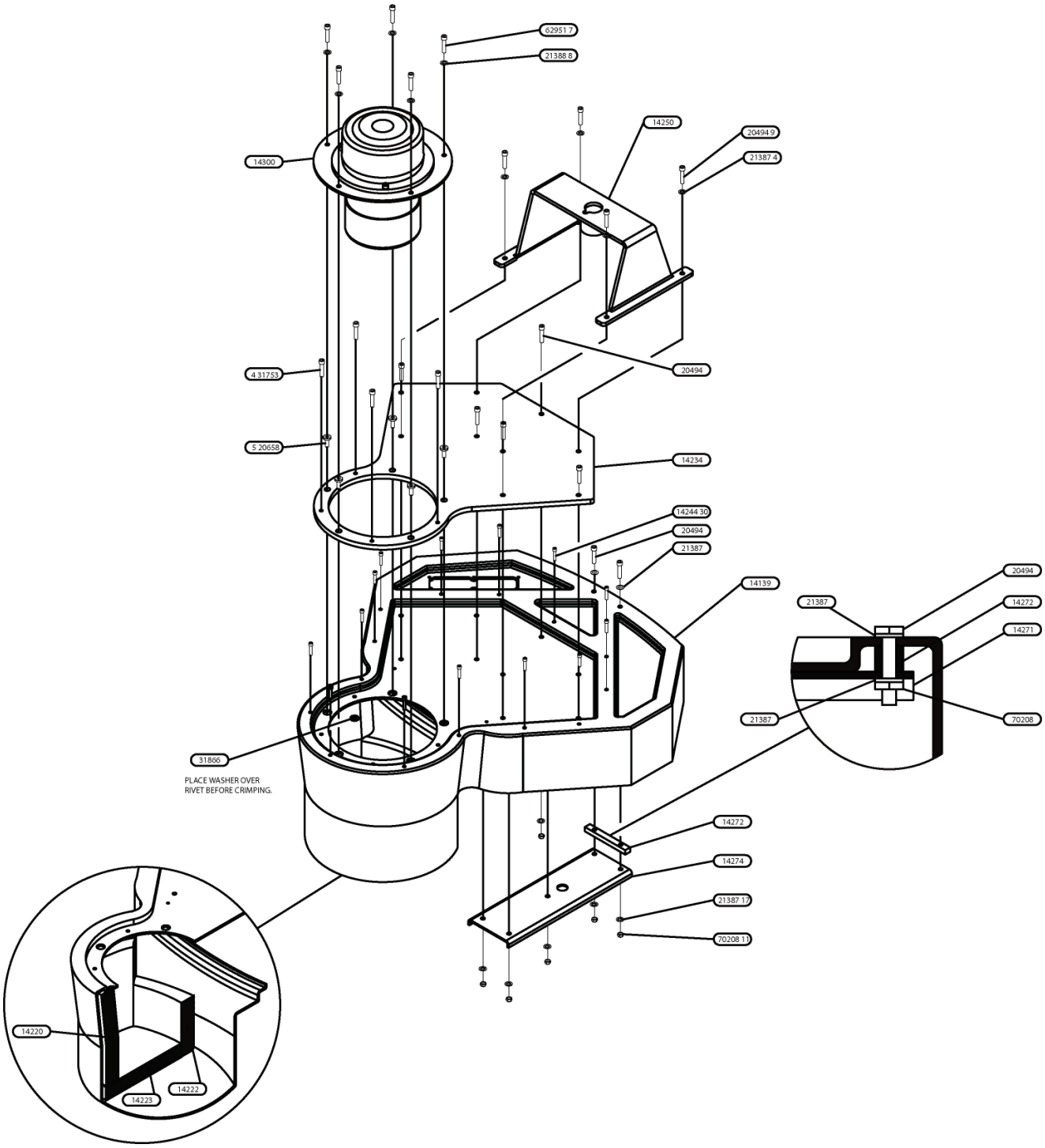

Motor Housing Assembly-120V

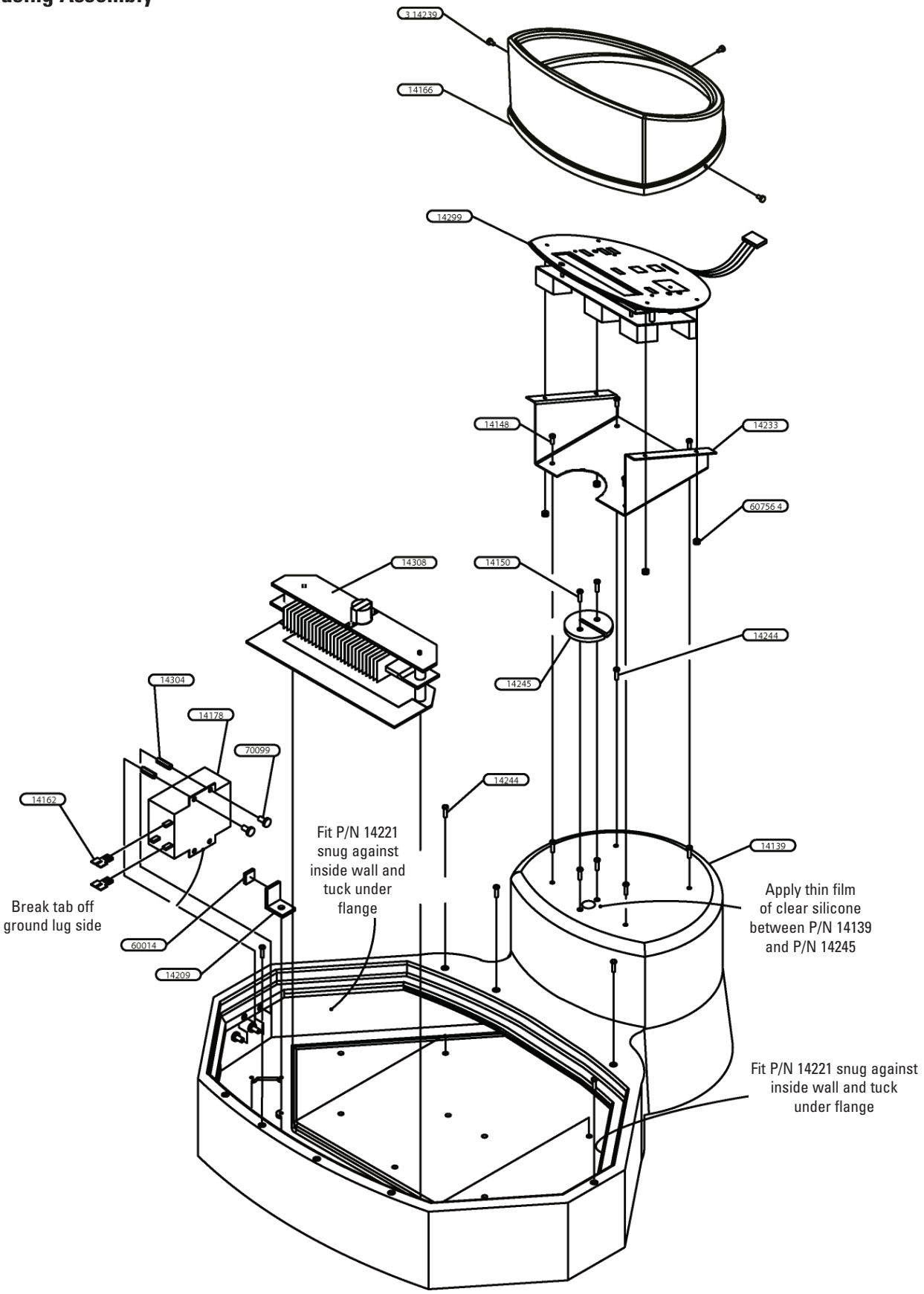

Motor Housing Assembly-230V

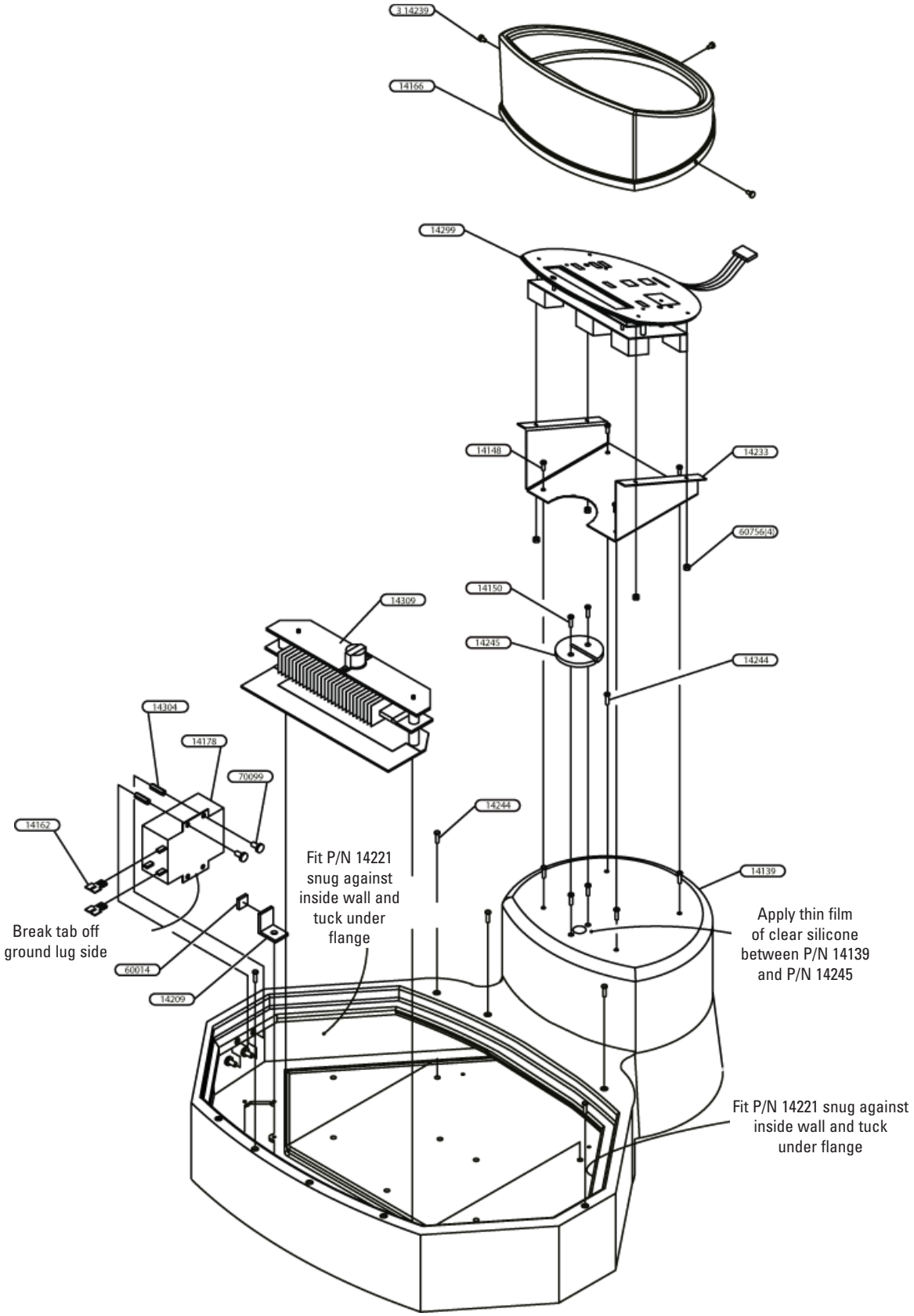

Final Assembly-120V

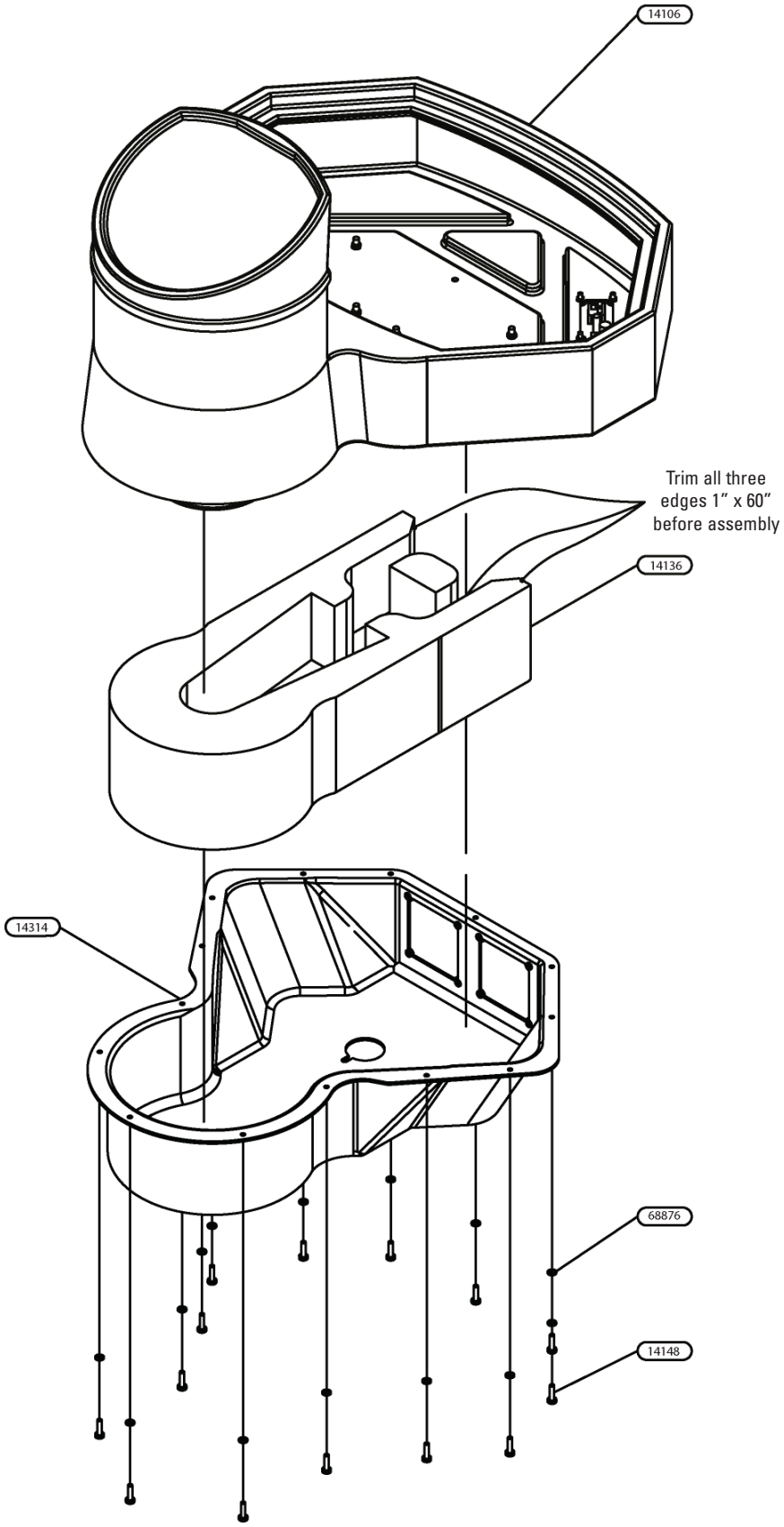

Final Assembly-230V

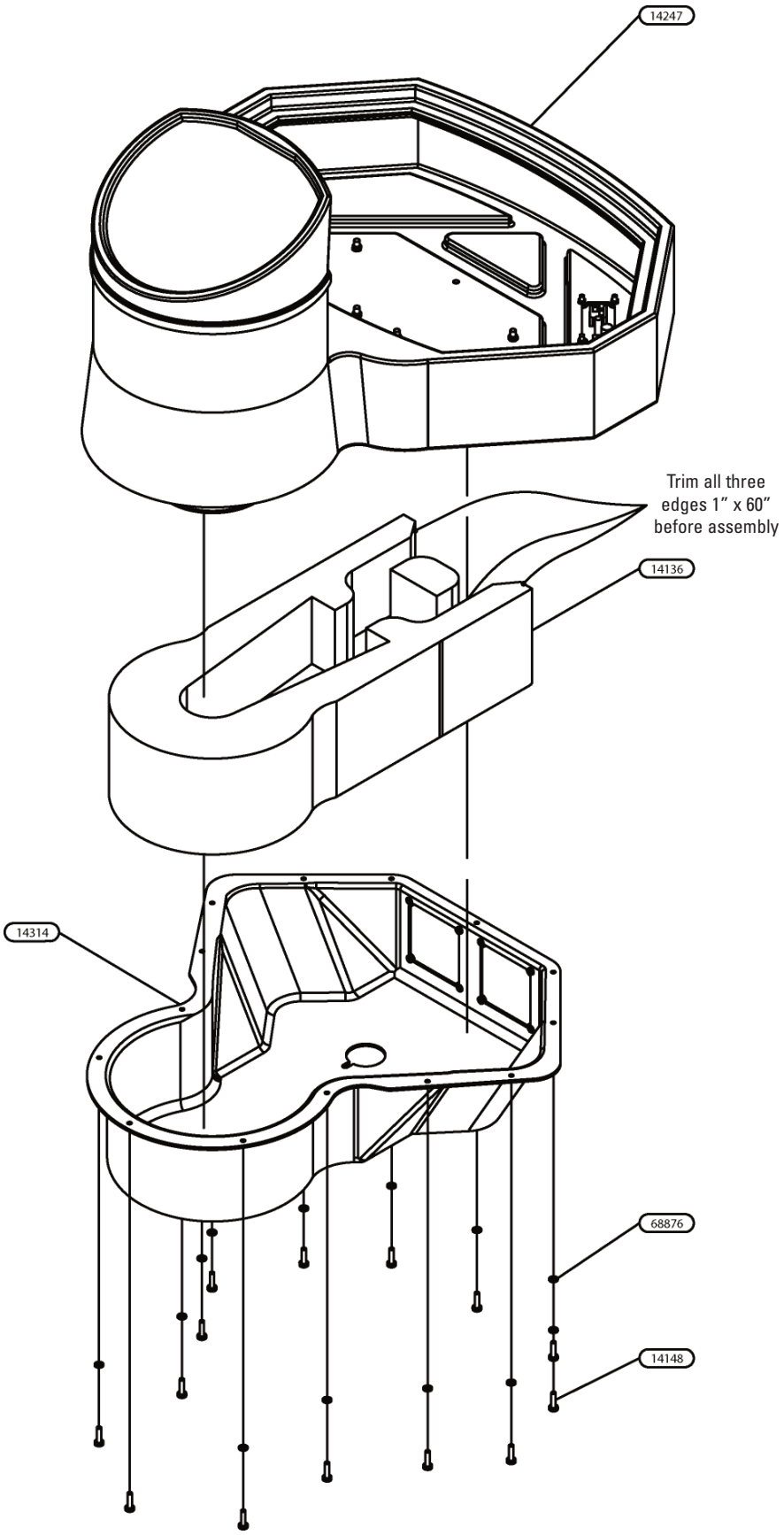

Final Assembly-120V

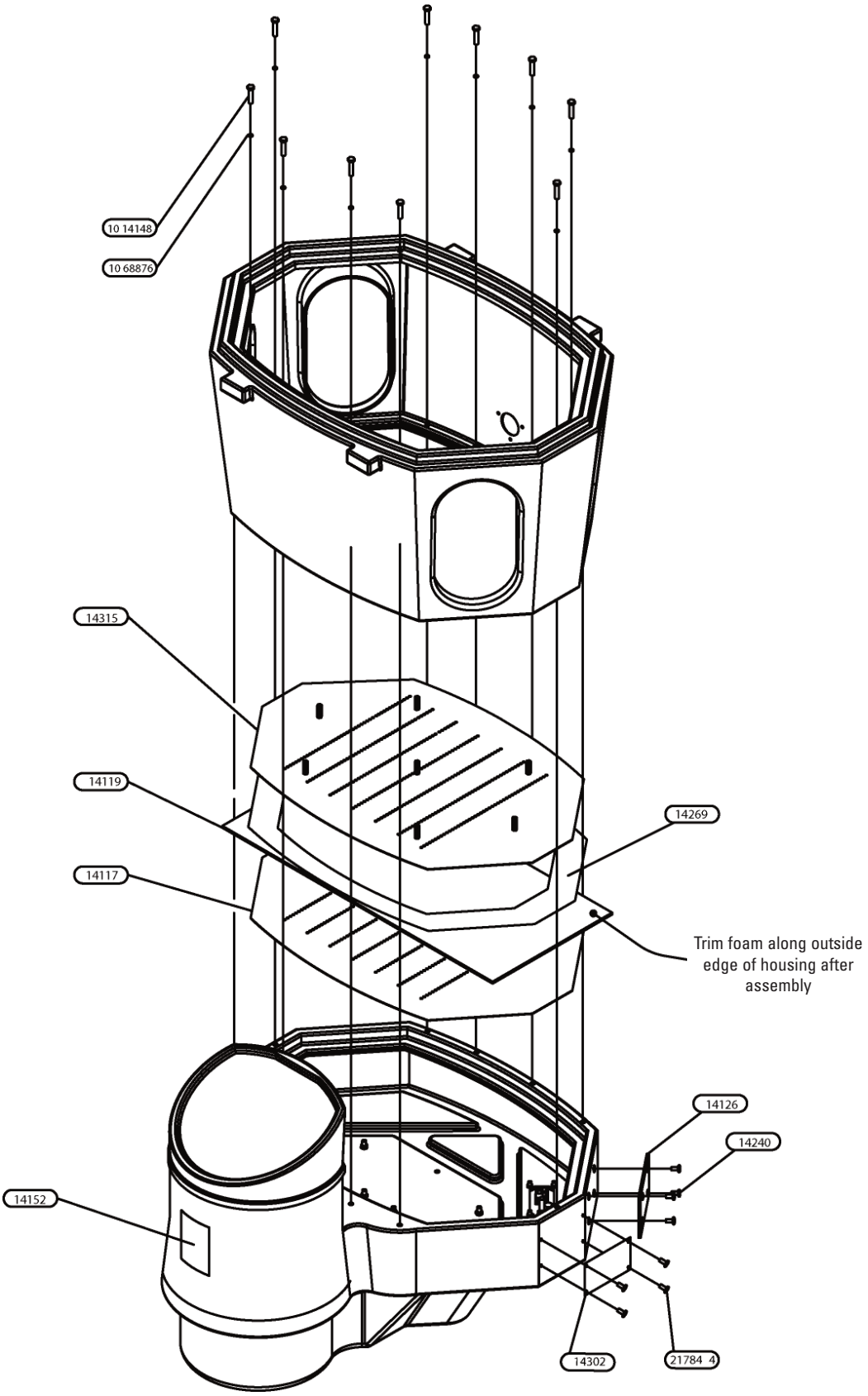

Final Assembly-230V

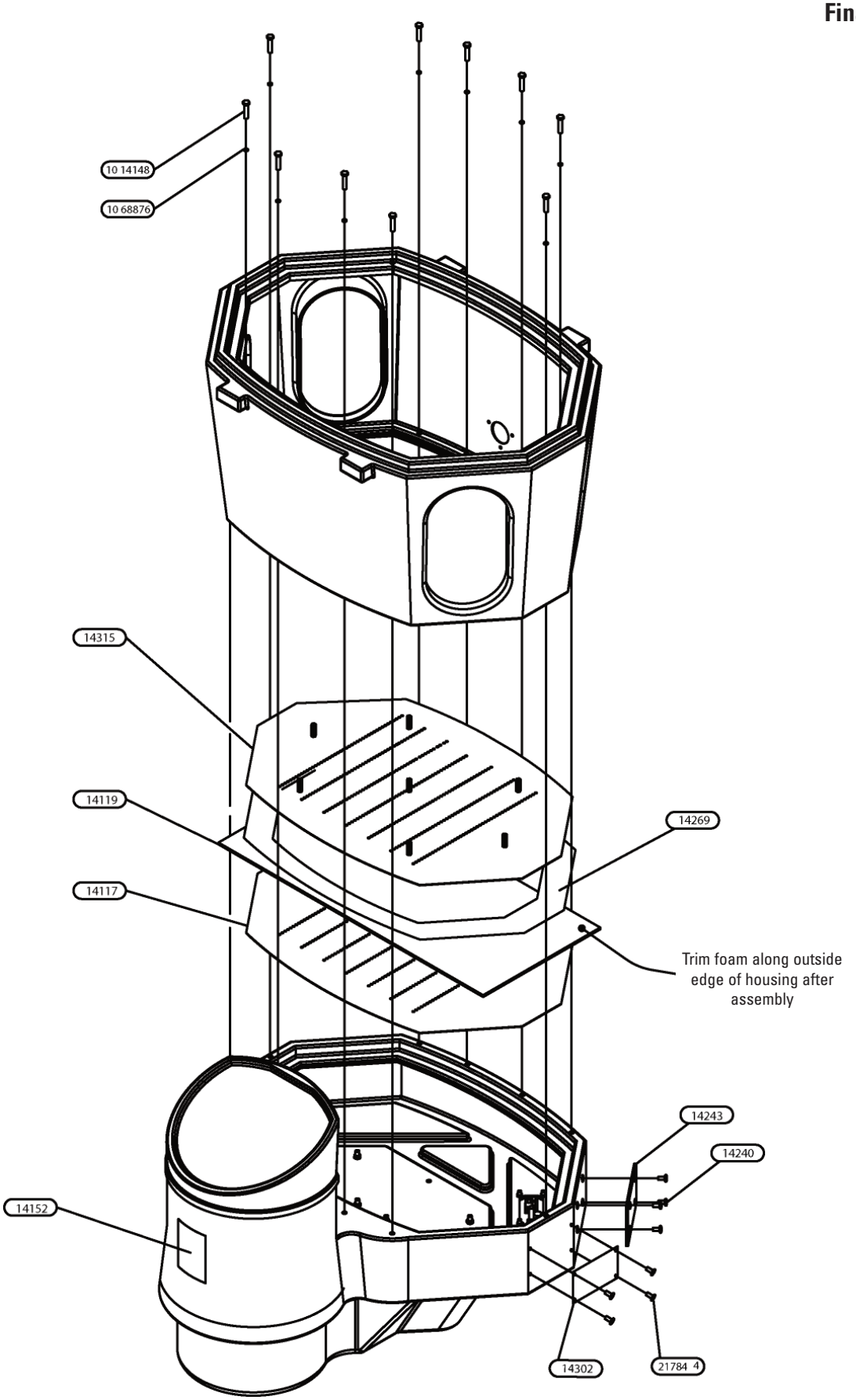

Final Assembly-120V

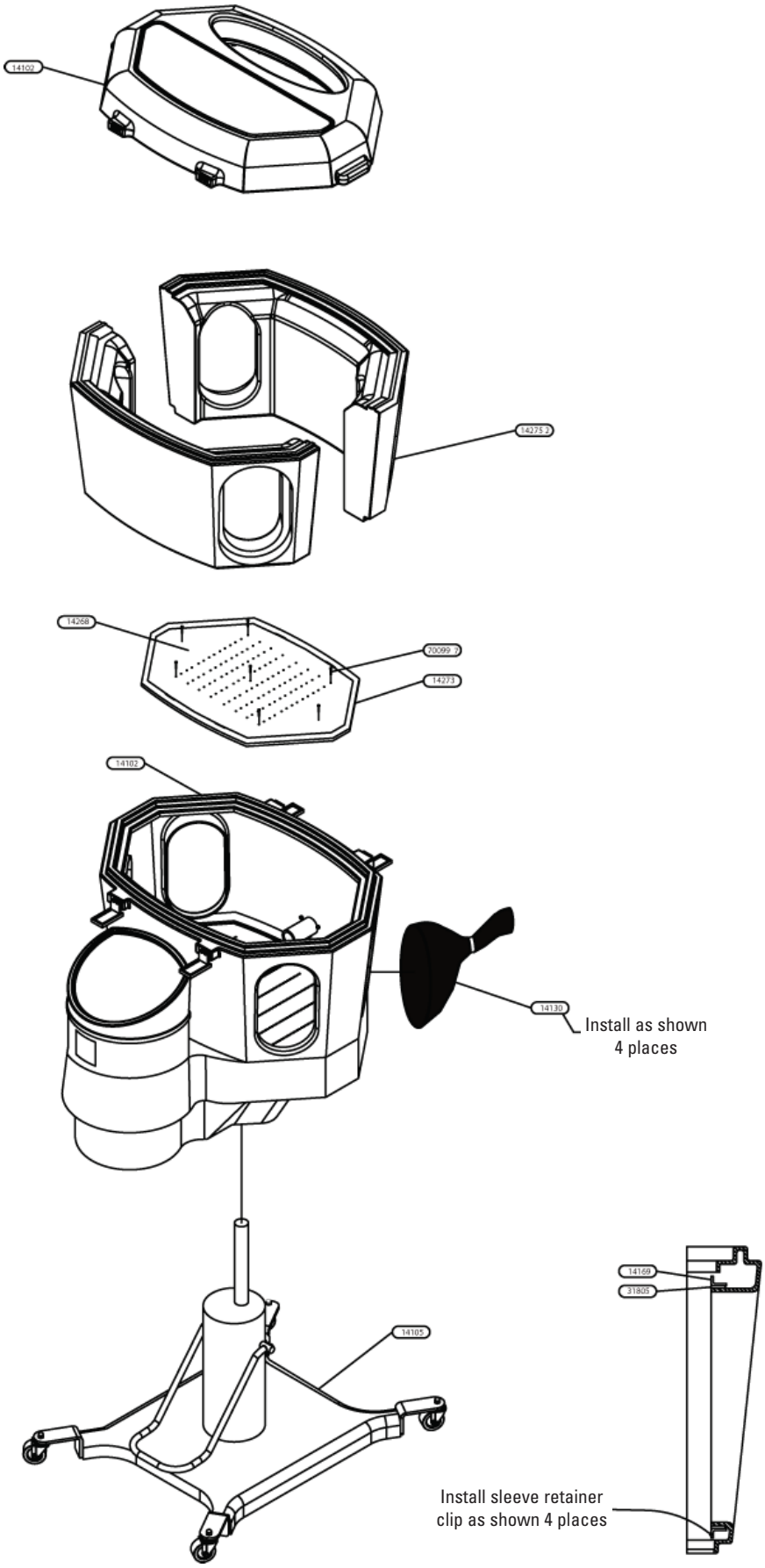

Final Assembly-230V

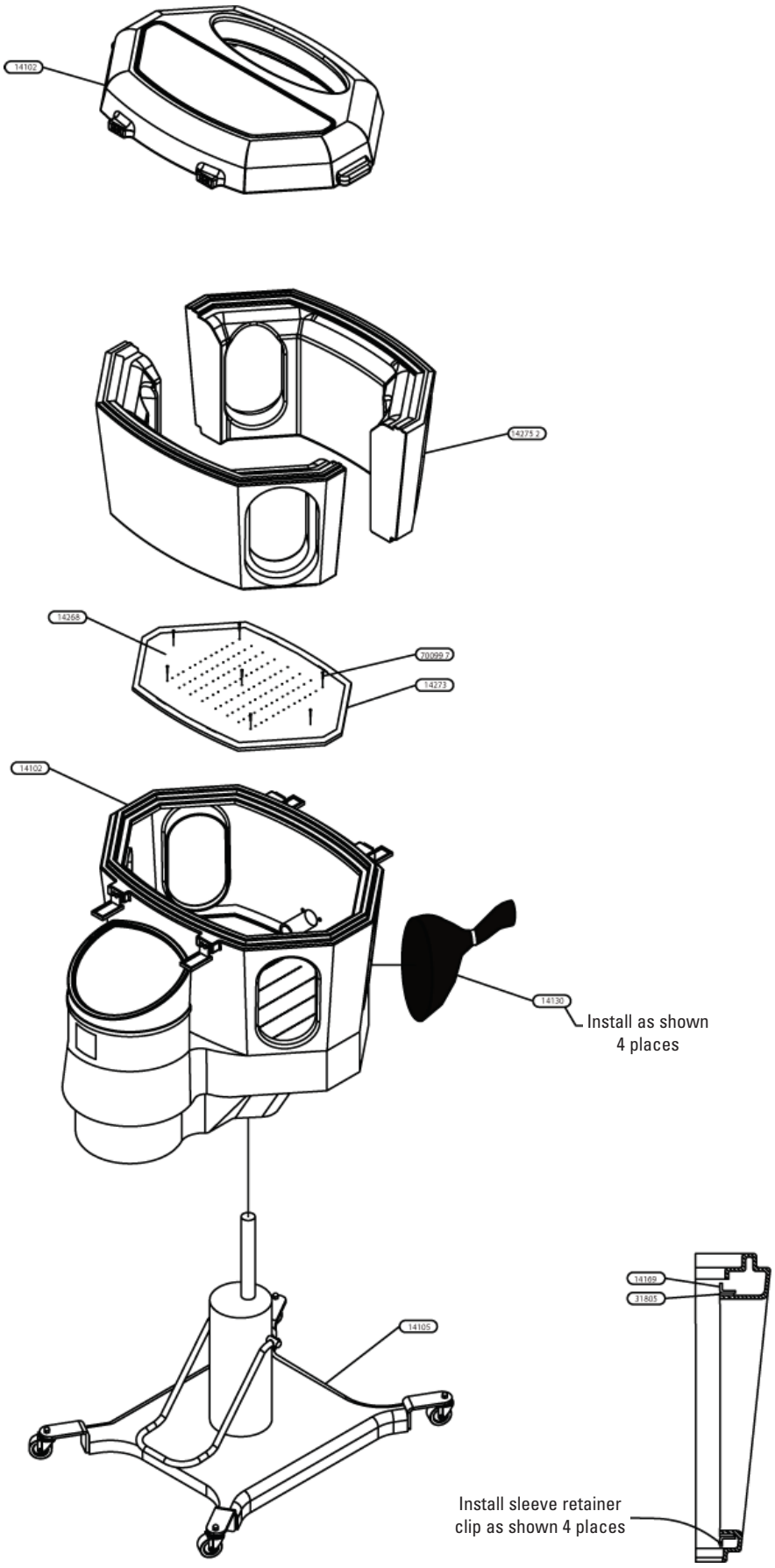

Chattanooga Group ("Company") warrants that the Fluido DHT units ("Product") are free of defects in material and workmanship. This warranty shall remain in effect for two years (24 months) from the date of original consumer purchase. If this Product fails to function during the two year warranty period due to a defect in material or workmanship, Company or the selling dealer will repair or replace this Product without charge within a period of thirty (30) days from the date on which the Product is returned to the Company or the dealer.

All repairs to the Product must be performed by a service center authorized by the Company. Any modifications or repairs performed by unauthorized centers or groups will void this warranty.

The warranty period for replaceable intake filter(s) is 90 days.

The warranty period for sleeves is one year (12 months).

To participate in warranty coverage, this Product's warranty registration card (included with Product) must be filled out and returned to the Company by the original owner within ten (10) business days of purchase.

This Warranty Does Not Cover:

Replacement parts or labor furnished by anyone other than the Company, the selling dealer or a certified Company service technician.

Defects or damage caused by labor furnished by someone other than Company, the selling dealer or a certified Company service technician.

Any malfunction or failure in the Product caused by product misuse, including, but not limited to, the failure to provide reasonable and required maintenance or any use that is inconsistent with the Product User's Manual.

COMPANY SHALL NOT BE LIABLE IN ANY EVENT FOR INCIDENTAL OR CONSEQUENTIAL DAMAGES.

Some states do not allow the exclusion or limitation of incidental or consequential damages, so the above limitation or exclusion may not apply to you.

To Obtain Service From Company or the selling dealer under this warranty:

1. A written claim must be made within the warranty period to the Company or the selling dealer. Written claims made to the Company should be sent to:

   4717 Adams Road
   P.O. Box 489
   Hixson, TN 37343 US
   Telephone: (423) 870-2281
   Tel (International): +1 (423) 870-7200
   Facsimile: (423) 870-7200
   Fax (International): +1 (423) 870-2046

   and
2. The Product must be returned to the Company or the selling dealer by the owner.

This warranty gives you specific legal rights and you may also have other rights which vary from state to state.

The Company does not authorize any person or representative to create for it any other obligation or liability in connection with the sale of the Product. Any representation or agreement not contained in the warranty shall be void and of no effect.

THE FOREGOING WARRANTY IS IN LIEU OF ALL OTHER WARRANTIES, EXPRESSED OR IMPLIED, INCLUDING ANY WARRANTY OR MERCHANTABILITY OR FITNESS FOR A PARTICULAR PURPOSE.

When the Fluido DHT unit requires service, or preventive maintenance, contact the selling dealer or Chattanooga Group Service Department.

All units returned to the factory for service must include the following;

WARRANTY REPAIR/OUT OF WARRANTY REPAIR

1. Written statement containing the following information;

- RGA Number- Obtain from Factory
- Unit Model Number
- Unit Serial Number
- Contact person with Phone and Fax Numbers
- Billing Address (for Out of Warranty Repair)
- Shipping Address (Where to Ship Unit after Repair)
- Detailed Description of Problem or Symptoms

2. Copy of original invoice issued at purchase of the unit.

3. Ship unit to Factory in the original container with all accessories and information as required in item 1 above to:

Chattanooga Group
4717 Adams Road
Hixson, TN 37343
Phone: USA: 1-800-592-7329
Canada: 1-800-361-3661
Outside USA: +1-423-870-7200
FAX: 1-423-875-5497
FAX (International): +1-423-870-2046
Web Address: www.chattgroup.com

Service to these units should be performed only by Service Technicians Certified by Chattanooga Group.

ISO 13485 CERTIFIED

4717 Adams Road
P.O. Box 489
Hixson, TN 37343 U.S.A.
1-423-870-2281
1-800-592-7329 U.S.A.
1-800-361-6661 CANADA
+ 1-423-870-2046 OUTSIDE U.S.A. FAX
www.chattgroup.com

31971B