CardioServ/CardioServ VF

Version 4.x

Servicing Instructions

227 483 02 ENG
Revision J

GE Medical Systems
Information Technologies

gemedicalsystems.com

Caution:
During repairs/service interventions, observe the protective measures against damage due to ESD.

- *GE Medical Systems Information Technologies GmbH* considers itself responsible for the effects on safety, reliability, and performance of the equipment, only if:
  - assembly operations, extensions, readjustments, modifications, or repairs are carried out by *GE Medical Systems Information Technologies GmbH* or by persons authorized by *GE Medical Systems Information Technologies GmbH*,
  - the electrical installation of the relevant room complies with the applicable national and local requirements, and
  - the instrument is used in accordance with the instructions for use.
- This manual contains service information; operating instructions are provided in the operator's manual of the instrument.
- This manual is in conformity with the instrument at printing date.
- All rights are reserved for instruments, circuits, techniques, and names appearing in the manual.

The authorized representative for *GE Medical Systems Information Technologies Inc.* in Europe is:

GE Medical Systems *Information Technologies* GmbH
Munzinger Str. 5
79111 Freiburg, Germany
Tel. +49 (0) 7 61 45 43-0
Fax: +49 (0) 7 61 45 43-233

© 1997-2013 *General Electric Company. All rights reserved.*

Contents

1. General Introduction 5

2. General overview of CardioServ 7
2.1 Documentation and nomenclature of GE Medical Systems *Information Technologies* instrument part Nos 7
2.1.1 Configuration of instrument part No 7
2.1.2 Configuration of the PCB part Nos 7
2.1.3 Instrument status documentation (nominal status) 8
Instrument Versions 9

3. Functional Description 11
3.1 Pcb. usage on different CardioServ (4.x) Version 17
3.2 Important Servicing Note: 19

4. Signal Names 21
4.1 Pin configuration of panel connectors 27
4.1.1 Socket SpO2 27
4.1.1.1 30344357 / 30344539 up to CardioServ v4.1 27
4.1.1.2 2026752-001 from CardioServ v4.2 27
4.1.2 Socket ECG 303 442 99 28
4.1.3 Socket Option 303 445 17 28
4.1.4 Socket Paddle 303 444 16 29

5. Block Diagram CardioServ VF / v4.x 31

6. Assembly Instructions 33
Removing Recorder 35

7. Troubleshooting Hints 40
7.1 Error Codes in the CardioServ Self-Test Screen 42

8. Adjustment Instructions 44

9. Technical Specifications CardioServ/CardioServ VF 50

10. Maintenance and Technical Inspection 58
10.1 General Information 58
10.2 Testing Equipment 59
10.3 Visual Check 61
10.4 Performance Check 61
10.4.1 Power-up Test 61
10.4.2 Key Test 61

10.4.3 Printer Test 62
10.4.4 Energy Test 62
10.4.5 Pacemaker Test (with GE Medical Systems testing adapter) 63
10.4.6 SPO2 Performance Check 64
10.4.7 ECG Test 65
10.4.8 Cardioversion Test 65
10 4.9 Option Socket Input Test 65
10.5 Battery 66

11. Safety Analysis Test 66
11.1. General introduction 66
11.2 Recommended Test Equipment 67
11.3 Protective Earth Resistance Test 67
11.3.1 Leakage Current Measurement 68
11.3.2 Enclosure Leakage Current Test 68
11.3.3 Patient Leakage Current Test 69
12. Spare Parts Lists 71
13. Accessories: Car holder 75
14. Appendix: Drawings 77

Revision History

This document is subject to the ***GE Medical Systems Information Technologies*** change order system.
The revision code, a letter that follows the document part number, changes with every update of the manual.

Part No./Revision Code	Date	Comment
227 483 02 A	1997-12	Initial Release SW Version 4
227 483 02 B	1998-12	ECO 061246; New Power Supply 930 118 50
227 483 02 C	2001-04	ECO 065871
227 483 02 D	2004-01	ECO 074762
227 483 02 E	2004-11	ECO 079204
227 483 02 F	2005-07	ECO 080432
227 483 02 G	2006-08	ECO 083713
227 483 02 H	2007-04	ECO 087020
227 483 02 i	2007-11	ECO 087521, New languages, PCB update, new power supply.
227 483 02 J	2013-11	Changes on pages 9, 11-14, 17-19, 40, 48, 49, 51-53, 59, 62-66, 71-72

1. General Introduction

CardioServ Semi-Automatic and Manual

There are 2 CardioServ models: the semi-automatic and the manual defibrillator. Both models are available with a pacemaker and SpO2.

The manual CardioServ is a defibrillator designed to deliver synchronized and unsynchronized shocks. This requires the user to trigger capacitor charging and shock delivery manually.

The semi-automatic defibrillator is equipped with analysis software, which monitors the ECG for arrhythmias (fibrillation and ventricular tachycardia). When the analysis is started by pressing a key the ECG is analyzed. If the result of the analysis is positive, the capacitor is charged to the preselected energy level. The semi-automatic operating mode can be terminated by pressing a key or inserting the dongle.

For your notes

2. General overview of CardioServ

2.1 Documentation and nomenclature of GE Medical Systems *Information Technologies* instrument part Nos

2.1.1 Configuration of instrument part No

The instrument part No comprises 8 digits, the first 6 digits determining the instrument type, the last 2 digits the instrument version. The language is determined by configuration, thus having no influence on the part No.

E.g. Instrument Type	Version
CardioServ	101117 ..
without pacemaker	10111703
with SPO_2	10111704
with pacemaker and SPO_2	10111705

2.1.2 Configuration of the PCB part Nos

388 xxx yy Spare part numbers for the operative PCBs.

The instrument documentation, e.g., reference diagrams, circuit diagrams and parts lists are listed under this part No.
The 388 number is located on the barcode label.

Configuration of the barcode labels:

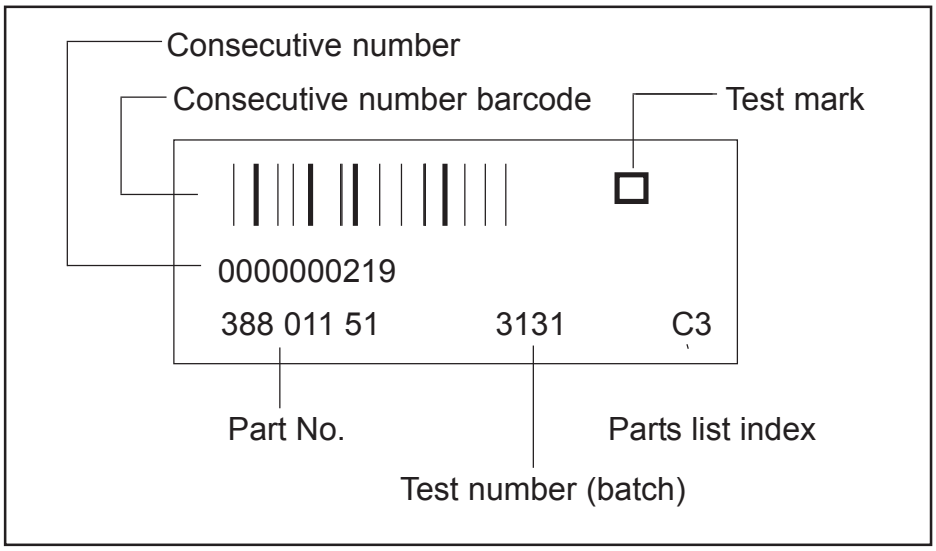

303 xxx yy Spare part numbers for PCBs tested especially thoroughly

303 numbers are only given to PCBs where the level of testing applied to 388 PCBs is inadequate for implementation when servicing in the field, or where only a complete set of PCBs can be replaced in the field.
In addition to a barcode label (388 number) 303 part Nos also have an additional label with a 303 number and are to be found in the spare parts list under this number.

389 xxx yy Replacement numbers for defective PCBs

Where servicing is required 389 PCBs are available for the replacement of some PCBs. When using a replacement PCB (389 part No) the defective PCB is to be returned to the Freiburg factory. Replacement PCB part Nos are included in the spare parts list.
389 PCBs have an additional adhesive label.

2.1.3 Instrument status documentation (nominal status)

Due to the hardware and software combination unambiguous documentation of the instrument assembly status is necessary, also in the event of repairs.

This documentation comprises the following documents and measures:

Master Record Index (MRI) (see Appendix)

This document is a component of this instrument documentation.

This document states the combination of permissible hardware and software for a particular instrument version. The permissible PCB Index is given in the “Index” column with each update delivered. Further permissible PCB Indexes are given in the “compatible” column. The PCB Index can be found in the PCB barcode label.

Product Status Index

This document is created during manufacture. The Product Status Index documents the hardware/software product status.

Instrument Versions

These servicing instructions describe the manual CardioServ and the semi-automatic CardioServ VF

Manual CardioServ

101 117 01 CardioServ without pacemaker, without SPO2
101 117 03 CardioServ with pacemaker, without SPO2
101 117 04 CardioServ without pacemaker, with SPO2
101 117 05 CardioServ with pacemaker, with SPO2

101 117 02 CardioServ Esaote without pacemaker, without SPO2
101 117 06 CardioServ Esaote with pacemaker, without SPO2
101 117 07 CardioServ Esaote without pacemaker, with SPO2
101 117 08 CardioServ Esaote with pacemaker, with SPO2

CardioServ VF

101 117 21 CardioServ without pacemaker, without SPO2
101 117 22 CardioServ with pacemaker, without SPO2
101 117 23 CardioServ without pacemaker, with SPO2
101 117 24 CardioServ with pacemaker, with SPO2

101 117 29 CardioServ Esaote without pacemaker, without SPO2
101 117 30 CardioServ Esaote with pacemaker, without SPO2
101 117 31 CardioServ Esaote without pacemaker, with SPO2
101 117 32 CardioServ Esaote with pacemaker, with SPO2

For your notes

3. Functional Description

The Therapy System CardioServ comprises a defibrillator, a monitor (LC display 240 * 320 pixels), a printer and a power supply unit. These components are arranged in a casing. It is a compact unit, which can also be implemented using a 230-V power supply system, even without a battery. The unit has a pulsed 140-mA standard charge for the battery. Additional versions available have an external pacemaker and an SpO2 module, separately or combined.
The Defi is switched on by turning the rotary switch to position ECG or energy levels automatic sequence 2 ... 360 J.
Following a self-test, which tests

- RAM data store
- ROM program memory
- Watchdog / Reset
- EEPROM permanent memory
- Display all Pixels on / off
- Time base of internal quartz crystal
- Energy charge from last shock
- Defective charge or Defib keys
- Position of energy selector switch
- Connected electrodes
- Pacemaker
- SpO2

the Defi is ready for operation. If an error arises, depending on the severity of the error, the Defi is either on standby or not. Serious errors are watchdog, ROM or RAM errors. In the case of minor errors, an error message appears, but the instrument can be rendered operative by pressing a key.

The Defi shock is delivered via exchangeable paddles. This permits the use of different electrodes. In addition to conventional electrodes, large-surface adhesive electrodes or internal electrodes, for example. Adhesive electrodes are used for the pacemaker. The CardioServ also has Charge and Trigger buttons on the instrument.

The charge operation is actuated with the Charge key on the apex electrode (for internal and adhesive electrodes on the instrument). During the charge operation, the accumulation of energy is shown on the display. When the selected energy level has been reached, the energy to be released appears on the display. An acoustic tone sequence and a message on the monitor indicate that the selected energy level has been reached. When the battery is fully charged or with line-power operation, charge time to 360 J should be about 8 s.

The buttons on both electrodes are pressed to trigger the defibrillation pulse (safety two-hand operation). This means that the button on the apex electrode (or the corresponding one on the instrument) has two functions:

- start the charge operation
- trigger defibrillation (together with the Trigger button)

The type of electrodes connected are identified and, in the case of internal electrodes, the energy is automatically limited to 50 joules.

Following defibrillation, the energy released is displayed on the screen for 6 seconds. Documentation output is by the printer.

The defibrillator has three operating modes:

* synchronized defibrillation (cardioversion)
* unsynchronized defibrillation (emergency therapy)
* semi-automatic (emergency service)

Cardioversion (operating mode Sync) can proceed either via the paddles or a patient cable. The operating mode Sync appears on the display and Sync marks are superimposed on the display. Following cardioversion, for safety reasons, the CardioServ switches automatically back to the unsynchronized operating mode. Before each cardioversion the instrument must be switched over to Sync mode.
The Defi can be configured for semi-automatic operation in three ways:
* As a semi-automatic instrument only (defibrillation only possible via analysis)
* Semi-automatic instrument which can be toggled to manual mode by pressing a key
* Semi-automatic instrument which can be reset into manual mode using a dongle

ECG signal pick-up is possible via the paddles or ECG cable. ECG is output on the LCD display or by the built-in 50-mm printer.

A safety device ensures the discharge of the storage capacitor in the following situations:

- when defibrillation is not triggered 30 seconds after storage operation is complete,
- 0.2 seconds after triggering defibrillation,
- immediately after switching back the energy selector switch during or after storage,
- when the battery voltage drops below a certain level,
- when the selected energy level still has not been reached after 32 seconds.

When switching to a higher energy level, the energy deficit is supplied by recharging.

Pacemaker

The pacemaker is a transthoracic pacemaker operating in the Demand and Fix mode.
- Pulse width 40ms (20 ms)
- The frequency is between 0...180 P/min (> 150 P/min only 20ms pulse width)
- The current is between 0...200 mA
- Adjustment is in 5-unit intervals.

The pacemaker is operated using 6 keys on the control panel. One key switches the pacemaker on, one key changes the operating mode, the other keys are used to adjust the frequency and current. The defibrillator cannot be disabled as long as the pacemaker is switched on. The adhesive electrodes of the Defi are used to release a pulse. This ensures a rapid switch from defibrillator to pacemaker and back again.

SpO_2

SpO2 is based on a module manufactured by Nellcor. This module is located on the PCB Analog and receives its power from the latter. Measurement of the oxygen saturation level and pulse frequency is made by this PCB.
Pulse frequency from 0...250 P/min
Saturation from 0...100%
We display the plethysmogram, saturation level and, when selected, the pulse frequency instead of the HR.

Control options:

A battery charge check is performed under load application. The message “charge battery” on the display means the battery needs recharging. At least five discharges at maximum energy are still possible. (Possibly even considerably more)

Performance check of defibrillation is performed by discharging into the integrated 50-Ohm resistor.

Battery charge via the power cord connector can be monitored by the yellow LED. If the battery is fully charged after 16 h, trickle charging ensues, the yellow LED is permanently lit up.

The monitoring function of the CardioServ records and monitors the ECG and oxygen saturation level. The cardiac-action potentials are fed to the ECG preamplifier via a 5-wire patient cable. Selection can be made from 12 leads. The ECG curve is displayed on the LC screen with an illuminated background. The heart rate obtained from the ECG signal is continuously displayed on the screen.

Communication between the user and the instrument occurs via the keyboard and the LC screen. These also serve to configure the default settings and functions (see User’s Manual for further details).

The PCBs have the following functions:

PCB Power Supply

This PCB supplies the 16.5-V instrument power supply. 10 A can be supplied for short-term capacitor charging. It is a primary clock-rated wide-range power supply system. It operates from 95 .. 240 V, at 49 ... 65 Hz. It is protected by 2 fuses in the primary circuit.

PCB Analog

This PCB has several functional units.
The first unit accepts the ECG signals (patient input) received via the patient cable from the patient. In accordance with its task, it is connected to the patient by a cable. It is thus constructed as an application component isolated from other circuit components and the circuit reference (floating). The tasks of this circuit component are:
- amplification of ECG signals
- lead selection (lead selector)
- identification and reporting of electrode defects
- identification and reporting of patient lead connection
- digitization and serialization of ECG data
- potential separation of the application component from the remaining circuit components (floating)
- floating component power supply
- ECG trigger
- pacing-pulse detection

There are two of these circuit components on this PCB. Once for the ECG via paddles, once for the ECG via patient cable.
A second unit provides floating separation and the power supply for SPO_2.
A further circuit component controls high-voltage generation for the Defi shock. There is a high-voltage capacitor on this PCB.
The functions are as follows :
- safety control during charging and shock release (1st path : hardware)
- controlling storage operation and energy release, independent of the CPU
- controlling the high-voltage generator
- elimination of interference in the operating elements in the Defi electrodes
- conversion of the voltage and current signals into a frequency to measure energy
- activation and control of the high-voltage transformer
- generation of the emergency cutoff signal in the event of inadmissibly high voltage
- measurement of the high voltage on the primary winding of the high-voltage transformer

- rectification of the high voltage
- protection of the high-voltage diode
- discharging the storage capacitor as a safety precaution
- measurement of the high voltage on the storage capacitor
- energy delivery via the high-voltage relay

A further unit organizes the entire instrument´s power supply. This is provided by the built-in battery, the power supply unit or, optionally, from an external battery (e.g., ambulance power supply system). It has the following tasks:
- switching instrument on/off
- automatic cutoff when battery voltage is too low
- monitoring the “charge battery” threshold
- power source selection: battery or power supply system
- charging the built-in battery by a special circuit independent of how high the supply voltage is

PCB Digital

The PCB Digital is equipped with the microcontroller, which controls the entire instrument. It comprises a Motorola 68332 microcontroller, RAM, EPROM, EEPROM, watchdog and I/O ports. It has the following functions:
- safety control during charging and shock release (2nd path : software)
- displaying the ECG and text on the LC screen (delete bar procedure)
- processing the curves and texts for the printer controller for output onto paper
- 50 / 60-Hz filter (software)
- alarm management

Circuit component display :
- graphics controller to control the display, which ensures screen refresh
- display RAM
- generation of voltages for the LCD (LCD power supply)
- generation of high voltage for background illumination
- Pal for chip select generation for display
- contrast adjustment

Circuit component real-time clock :
- real-time clock with lithium battery buffer and integrated quartz crystal
- Pal for chip select generation for clock

Circuit component 1-channel recorder :
- single-chip microcontroller to output data at thermal-array printhead
- monitoring printhead temperature
- motor control for paper transport
- switches off motor in the event of overload or underload

- generation of power supply voltages for the recorder
- processing of all signals for the printer microcontroller

Further circuit components on the PCB are :

- generation of 5 V from 12 V via an integrated switching controller, short-circuit-proof and protected against overvoltage by Transzorb diodes
- sound generator, frequency controlled by SW
- RS-232 interface, protected against overvoltage by Transzorb diodes. Interface integrated into microcontroller, external conversion of level from 5 V to +- 12 V.
- energy selector switch, binary coded, delivers its information to PCB Analog and to the microcontroller
- keyboard interface to connect the membrane keypad
- control of LEDs on the keypad
- watchdog
- reset generation, when +5-V supply drops below 4,65 V or exceeds 5,5 V
- RAM buffering by battery when instrument is switched off
- pacemaker functions integrated on PCB Digital
- serial hookup of pacemaker and microcontroller
- pacemaker conducts current when in operative mode only.

3.1 PCB usage on different CardioServ (4.x) Version

	PCB Digital Spare 388 032 06	PCB Digital Spare 388 032 53	PCB Analog Spare. 303 445 43	PCB Power Supply Spare 930 118 46	PCB SPO2 Spare 93011726 (up to v4.1) 2026753-001 (from v4.2)
CardioServ 101 117 01 Version 4.x without pacemaker / without SPO2		x	x	x	
CardioServ 101 117 03 Version 4.x with pacemaker / without SPO2	x		x	x	
CardioServ 101 117 04 Version 4.x without pacemaker / with SPO2		x	x	x	x
CardioServ 101 117 05 Version 4.x with pacemaker / with SPO2	x		x	x	x
CardioServ 101 117 02 Version 4.x ESAOTE without pacemaker / without SPO2		x	x	x	
CardioServ 101 117 06 Version 4.x ESAOTE with pacemaker / without SPO2	x		x	x	
CardioServ 101 117 07 Version 4.x ESAOTE without pacemaker / with SPO2		x	x	x	x
CardioServ 101 117 08 Version 4.x ESAOTE with pacemaker / with SPO2	x		x	x	x

PCB usage on different CardioServ VF (4.x) Version

	PCB Digital Spare 388 032 06	PCB Digital Spare 388 032 53	PCB Analog Spare. 303 445 43	PCB Power Supply Spare 930 118 46	PCB SPO2 Spare 930 117 26
CardioServ 101 117 21 Version 4.x without pacemaker / without SPO2		x	x	x	
CardioServ 101 117 22 Version 4.x with pacemaker / without SPO2	x		x	x	
CardioServ 101 117 23 Version 4.x without pacemaker / with SPO2		x	x	x	x
CardioServ 101 117 24 Version 4.x with pacemaker / with SPO2	x		x	x	x
CardioServ 101 117 29 Version 4.x ESAOTE without pacemaker / without SPO2		x	x	x	
CardioServ 101 117 30 Version 4.x ESAOTE with pacemaker / without SPO2	x		x	x	
CardioServ 101 117 31 Version 4.x ESAOTE without pacemaker / with SPO2		x	x	x	x
CardioServ 101 117 32 Version 4.x ESAOTE with pacemaker / with SPO2	x		x	x	x

3.2 Important Servicing Note:

Replacing CardioServ PCBs

When CardioServ PCBs are replaced the technician must call up the self-test screen after replacing the PCB. The new components are reported automatically in the software configuration. After restarting CardioServ recognizes the new components. This is important in the case of SpO2 and Pacemaker. Further the Performance Check (see section 10.4) needs to be accomplished.

Replacing PCB Digital

The identification numbers 0000 and 1111 are stored in the Eeprom of the PCB Digital for CardioServ Manual and CardioServ VF, respectively.

The replacement PCB always has the identification number 0000 stored in the Eeprom for CardioServ Manual.

If during servicing the replacement PCB Digital is inserted into a CardioServ VF, when it is switched on the CardioServ is in the manual mode. The following combinations of keys are required to switch the CardioServ from manual to semi-automatic operation.

1. Press F1 and F5 keys simultaneously: The function **Configuration** appears on the screen.

2. Press F3 and F4 keys simultaneously: The function **Key Test** appears on the screen.

3. Press the Analysis key.

4. Press F3 and F4 keys simultaneously.

The identification code for the CardioServ VF stored in the Eeprom of the PCB Digital is now 1111 and the CardioServ operates in the semi-automatic mode.

For your notes

4. Signal Names

Interface Signals PCB DIGITAL <-> PCB ANALOG Connector

Note: I/O from processor 68332 viewpoint

Signal Name	I/O	Meaning	Level	Polarity
ENSELD-ENSELA	I/O	Selection of energy level or device On/Off or position ECG DCBA HHHH -> locked mechanically, reaction to error HHHL -> Device off HHLH -> ECG HHLL -> 2J HLHH -> 5J HLHL -> 7J HLLH -> 10J HLLL.-> 20J LHHH -> 30J LHHL -> 50J LHLH -> 70J LHLL -> 100J LLHH -> 150J LLHL.-> 200J LLLH -> 300J LLLL -> 360J	+5V	---
TACHARGE	----	Charging signal from keypad	+5V	high-active
TADISCHARGE	----	Discharge signal from keypad	+5V	high-active
TAENABLE	O	Release signal for shock release via keypad	+5V	high-active
CHARGE_	I	Charging OR signal from keypad and paddle	+5V	low-active
DISCHARGE_	I	Discharge OR signal from keypad and paddle	+5V	low-active
PAPRINT	I	Triggers printout	+5V	high-active
ENERGY- SELECTED	O	L=enables HV generator start H=switches HV generator and HV off Reset position or lead interrupt = high	+5V	low-active
RELEASE	I	Message D relay on	+5V	high-active
SYNC_	O	Triggers Defi shock in SYNC mode off. Is low in normal mode. Prevents shock release when high	+5V	low-active
RESDEF_	O	Reset Defi	+5V	low-active
AIMESS	O	Enables pick-up of C relay, toggles between current and voltage measurement L=C relay off, voltage reading H=C relay on, current reading	+5V	high-active
RELE	O	Switches E relay on, thereby enabling pick-up of C relay L=E relay not picked up H=E relay picked up	+5V	high-active

Signal Name	I/O	Meaning	Level	Polarity
GEST	I	With a L->H change shows when the generator was started and with H->L change when the selected energy level is reached. (Detection by oscillator reverse voltage)	+5V	high-active
ELEC1 - ELEC3	I	Defi Electrode Identification 321 HHH -> External Electrode HLL -> Adhesive Electrode LHL -> Internal Electrode Other	 +5V	 ----
U_F	I	Current or Voltage Measurement Converted into Frequency	+5V	----
PWON_	----	Stop Signal for Electronic Relay (Device-On/Off)		low-active
BATLOW_	I	Battery Undervoltage	+5V	low-active
BATLAD_	I	Battery Charge Display	+5V	low-active
12VBAT	----	12-V Standby Power Supply for Static RAMs	+12V	----
LINE	----	Line-Power Operation Display	+12V	high-active
MISOEXT	I	Master-In Slave-Out (Buffered)	+5V	----
MOSIEXT	O	Master-Out Slave-In (Buffered)	+5V	----
SCKEXT	O	QSPI Serial Clock (Buffered)	+5V	----
PCS1EXT_	O	Peripheral Chip Select1 (Buffered)	+5V	low-active
PCS2EXT_	O	Peripheral Chip Select2 (Buffered)	+5V	low-active
GND	----	Ground Reference Level 5-V Supply	0V	----
+5V	----	+%V Power Supply	+5V	
RESETB_	O	Buffered Reset Signal	+5V	low-active
RX_SPO2	I	UART Signal Received Data for SPO2	+5V	-----
TX_SPO2	O	UART Signal Transmit Data for SPO2	+5V	-----
EKTRIG_	O	ECG Trigger für SPO2	+5V	-----
RESSPO2	O	Reset SPO2	+5V	low-active
RxD	I	Receive Data RS232	+5V	
TxD	O	Transmit Data RS232	+5V	
GND1V	O	Ground Analog 1Volt Out	+5V	
A!VOUT	O	Signal Analog 1Volt Out	+5V	

Interface Signals PCB DIGITAL <-> PCB ANALOG Connector PS

Signal Name	I/O	Meaning	Level	Polarity
GND_ANA	----	Ground	0V	----
+12V_ANA	----	+12V Power Supply	+12V	----
+5V-ANA	----	+5V Power Supply	+5V	----

Interface Signals PCB DIGITAL <-> Printhead/Motor Interface Connector PRINT

Note: I/O from processor 80C51 or motor control viewpoint

Signal Name	I/O	Meaning	Level	Polarity
KLA,	O	Printhead Latch Signal	+5V	high-active
KCLK	O	Printhead Clock Signal	+5V	L->H
KDAT	O	Printhead Data Signal	+5V	----
KSTRB	O	Printhead Strobe Signal	+5V	high-active
TERM1	I	Printhead Thermistor Connector1	+5V	----
TERM2	I	Printhead Thermistor Connector2	+5V	----
GNDJ	----	Ground Thermal-Array Printhead	0V	----
+5V	----	++5V Power Supply Thermal-Array Printhead	+5V	----
+22V	----	+22V Power Supply Thermal-Array Printhead	+22V	----
VDD1	O	Release Signal for Thermal-Array Printhead Overvoltage	+22V	high-active
MOTOR+	O	Motor Connector +	var	----
MOTOR-	O	Motor Connector -	var	----
SENSE	I	Motor Current Sensor Signal	var	----

Interface Signals PCB DIGITAL <-> LCD Connector AD (HOSIDEN HLM6323)

Note: I/O from Graphics Controller viewpoint

Signal Name	I/O	Meaning	Level	Polarity
V0	O	Contrast Voltage	var.	----
VEE	----	Negative Power Supply for LCD	-23V	----
D3-D0	O	Serial Pixel Data	+5V	----
M	O	LCD Drive Signal (AC Signal)	+5V	----
VSS	----	Ground	+0V	----
VDD	----	+5V Power Supply	+5V	----
CP2	----	Display Data Shift Clock	+5V	H->L
CP1	----	Display Data Latch Signal	+5V	H->L
S	O	Frame Signal	+5V	high-active
DISP_OFF_	O	Display ON/OFF H=Display ON L=Display OFF	+5V	low-active
FG	----	Frame Ground	0V	----

Interface Signals PCB DIGITAL <-> LCD Connector AE (HOSIDEN HLM8619)

Note: I/O from Inverter viewpoint

Signal Name	I/O	Meaning	Level	Polarity
FL HOT	O	High Voltage for CCFT	----	----
FL GND	O	High-Voltage Ground	----	----

Interface Signals PCB DIGITAL<->LCD Connector AF (OPTREX DMF50174NF- FW)

Note: I/O from Graphics Controller viewpoint

Signal Name	I/O	Meaning	Level	Polarity
FLM	O	Frame Signal	+5V	high-active
LP	----	Data Latch Signal	+5V	H->L
CP	O	Clock Signal for Shifting Serial Ddta	+5V	H->L
M	O	Alternate Signal for LCD Drive	+5V	----
VADJ	----	Contrast Signal	var	----
VCC_	----	+5V Power Supply	+5V	----
VSS	----	Ground	0V	----
VEE	----	-23V Power Supply	-23V	----
D3-D0	O	Display Data	+5V	----
DISP_OFF__	O	Display ON/OFF H=Display ON L=Display OFF	+5V	low-active

Interface Signals PCB DIGITAL<->LCD Connector AG (OPTREX DMF50174NF- FW)

Note: I/O from Inverter viewpoint

Signal Name	I/O	Meaning	Level	Polarity
FL HOT	O	High Voltage for CCFT	----	----
FL GND	O	High-Voltage Ground	----	----

Interface Signals PCB DIGITAL <-> Keypad Interface Connector AH

Note: I/O from processor 68332 viewpoint

Signal Name	I/O	Meaning	Level	Polarity
KBROW0_ KBROW1_ KBROW2_ KBROW3_	O	Keypad Matrix Columns	+5V	low-active
KBCOL0_ KBCOL1_ KBCOL2_ KBCOL3_	I	Keypad Matrix Lines	+5V	low-active
TAENABLE	O	Release Signal for Key Charge/Defib + Defib	+5V	high-active
TACHARGE	I	Charge/Defib Key	+5V	high-active
TADISCHARGE	I	Defib Key	+5V	high-active
ON_OFF_	O	On/Off Key	+5V	----
GND	----	Ground	0V	----
LINE	----	Line LED	+12V	high-active
BAT	O	Battery Undervoltage LED	+5V	high-active

Interface Signals PCB Potential Separation <->Nellcor MP204 / MP507 / NELL-2

Signal Name	I/O	Meaning	Level	Polarity
TX	O	Transmit	+5V	high-active
RX	O	Receive	+5V	high-active
EK_SYN	1	ECG Trigger Signal	+5V	high-active
RESET_	0	Reset	+5V	low-active
GNDF	----	Ground	0V	----

4.1 Pin configuration of panel connectors

4.1.1 Socket SpO_2

4.1.1.1 30344357 / 30344539 up to CardioServ v4.1

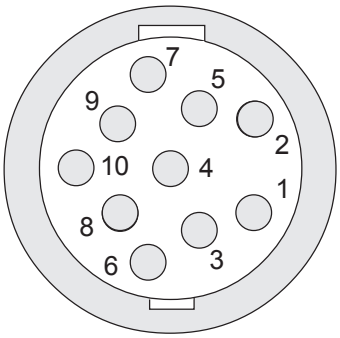

Front view

GE Medical Systems *Information Technologies* input socket, circular version
Blue mark on plug

	On device
1	Anode Photodetector
2	nc
3	nc
4	Cathode Photodetector
5	GND
6	R(cal)
7	LED - (Red LED Cathode, IR_LED Anode)
8	nc
9	LED + (Red LED Anode, IR_LED Cathode)
10	GND Screen

4.1.1.2 2026752-001 from CardioServ v4.2

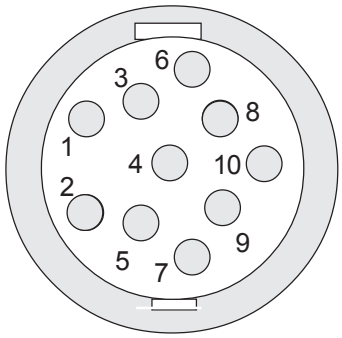

Front view

GE Medical Systems *Information Technologies* input socket, circular version
Blue mark on plug

	On device
1	Detector (+)
2	Ground
3	DIGICAL 1 - wire interface
4	Detector (-)
5	Ground
6	-------
7	LED (-)
8	-------
9	LED (+)
10	Ground

4.1.2 Socket ECG 303 442 99

GE Medical Systems *Information Technologies* input socket, circular version
Green mark on plug

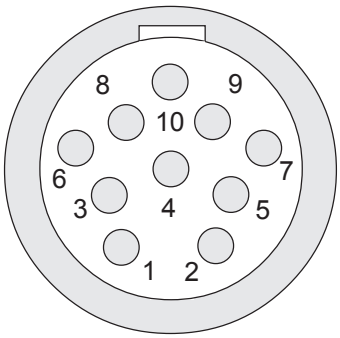

Front view

	5-Lead Cable	3-Lead Cable
1	Input R	R
2	Input C	L
3	Input F	F
4	Input N	---
5	Input L	---
6	Ident Cable Connected	Ident Cable Connected
7	GND floating	GND floating
8	---	---
9	Ident 5-Lead Cable	---
10	Screen	Screen

4.1.3 Socket Option 303 445 17

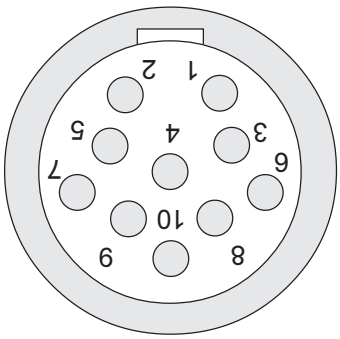

Front view

1	---
2	TX
3	RX
4	---
5	---
6	---
7	GNO
8	VCC
9	ECG
10	GND ECG

4.1.4 Socket Paddle 30344416

1 PACHARGE
2 PADISCHARGE
3 RECSTART
4 CODE
5 CODE
6 CODE
High Voltage / Pace / Apex
High Voltage/ Pace / Sternum

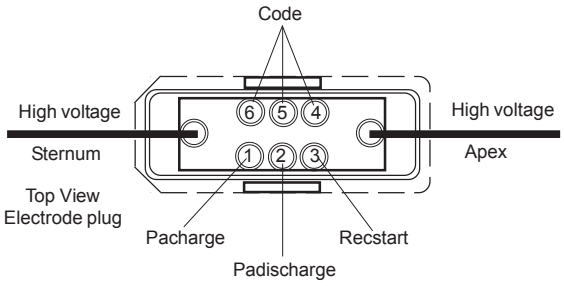

For your notes

5. Block Diagram CardioServ VF / v4.x

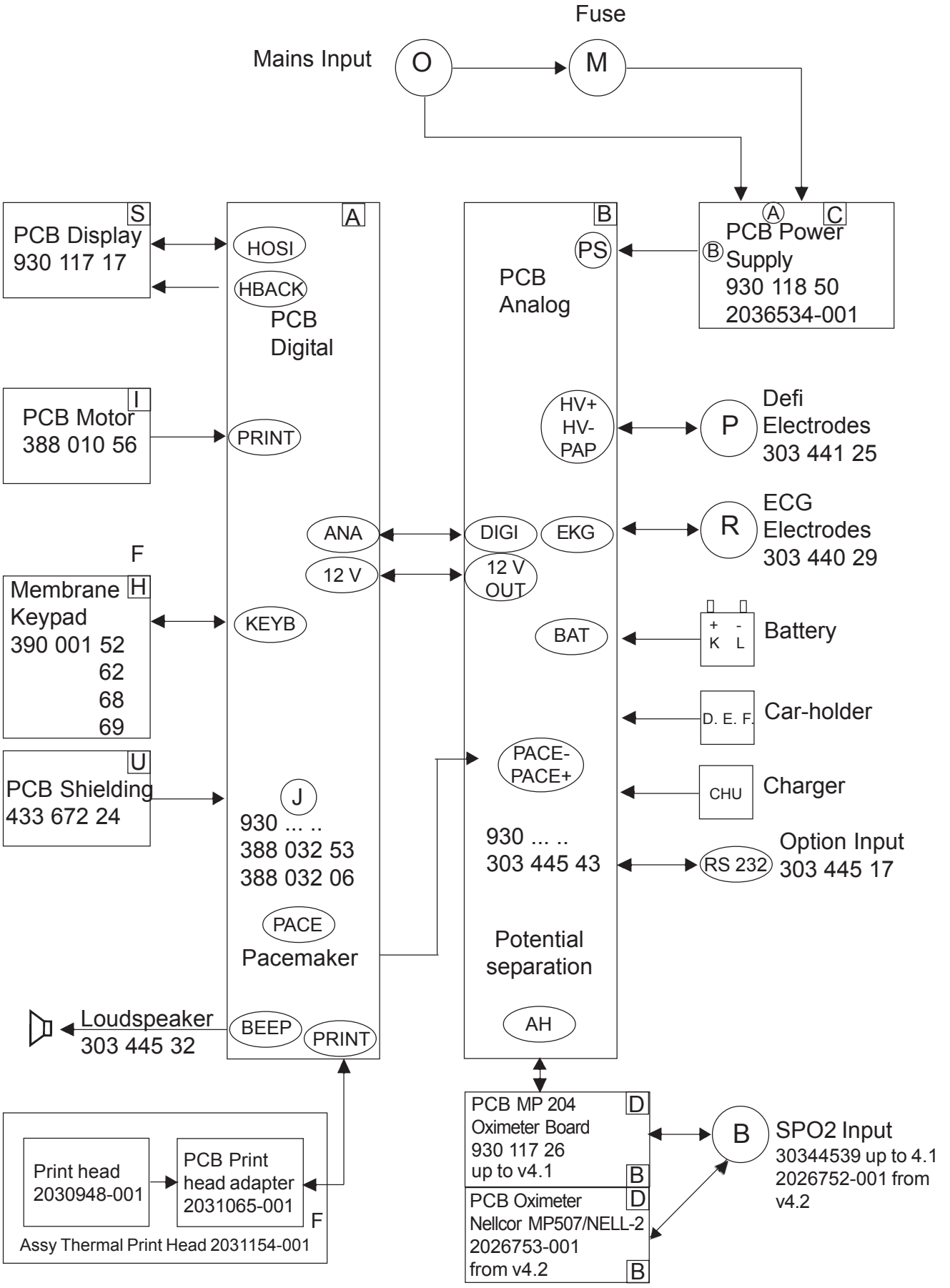

For your notes

6. Assembly Instructions

General Information:
Before opening the CardioServ switch the instrument off, disconnect power cord plug, remove battery and implement ESD protection measures. Return replacement PCB in ESD packaging only.

Opening the instrument:
Undo the 9 screws on the bottom of the device, place upper case shell to the left next to the instrument.

Removing the PCB Digital:
The PCB Digital is located in the upper shell. Disconnect the 50-pin flat strip cable and the 2-pin 12-V power supply cord. The recorder, plugged into the lower case shell, can be removed and the flat strip cable connected to the thermal-array printhead and motor disconnected. Lay the upper shell “face down”, remove the screening plate fixed in place by a screw and 5 plastic catches. Remove the insulating card. Undo the 8 PCB Digital fastening screws (leave the 4 display screws in place) and remove the rotating knob of the energy selector switch. **Carefully** lift up the PCB and pull out the membrane keypad connector on the left. The PCB Digital can now be removed along with the display screen.

Removing the display screen:
-Disconnect plug-in connector to display illumination.
-**Carefully** pull the zero power connector safety catch of the display-membrane keypad connector upwards and disconnect membrane keypad lead.
-Remove the 4 display fastening screws.

Removing the PCB Analog:
Disconnect 50-pin flat strip cable, connection cable to the battery, power supply unit and PCB Digital. Detach connector to the ECG socket and disconnect connections to Defi socket. Remove ECG amplifier cover with 3 screws and 2 plastic catches. Unscrew the 10 screws on the PCB Analog (4 capacitors, 2 high-voltage oscillators) and 3 hexagonal columns.

For your notes

Removing Recorder

Recorder can be removed by disconnecting the ribbon cable and take out the complete recorder.

Recorder Installation

It has to be prevented that any pressure to the print head or PCB print Head Adapter is applied if the upper housing shell is installed.

Situation 1: New print head assembly 2031154-001 in connection with PCB Digital with long print head ribbon cable

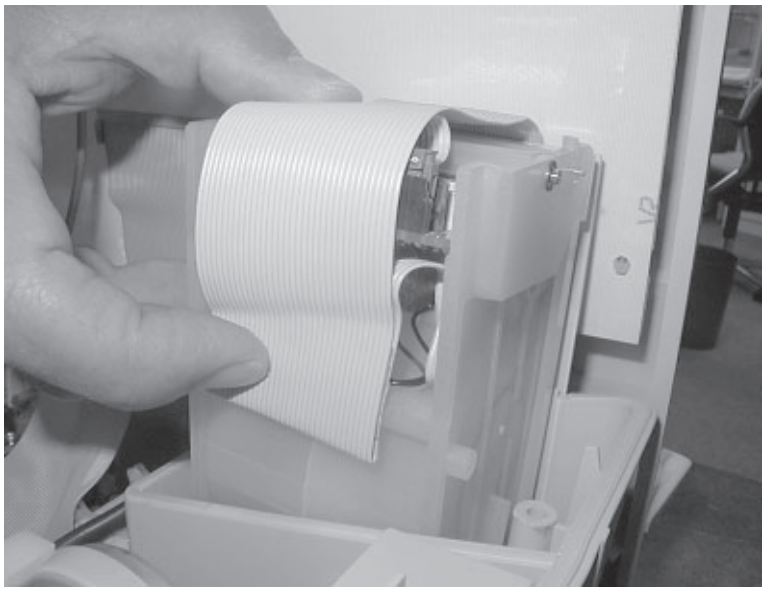

- Connect the motor and print head ribbon cable
- Lift the recorder unit ca. 2cm from it's support
- Position the 4-wire motor ribbon cable beneath the PCB Print Head Adapter (1)
- Press the 30-wire print head ribbon cable onto the recorder housing and shift the recorder back into it's support

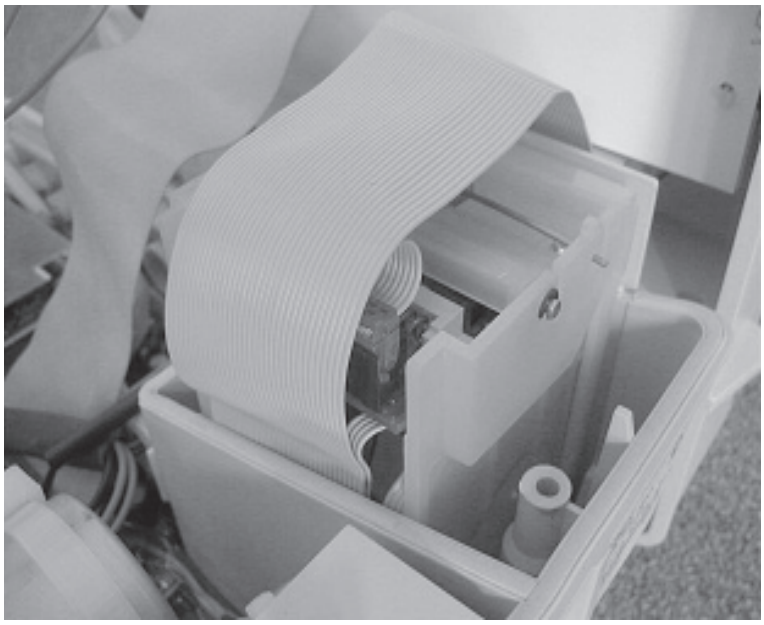

- Check that the cables are properly positioned

Situation 2: Old print head assembly 30343976 without PCB Print Head Adapter in connection with PCB Digital with long print head ribbon cable

Proper recorder installation

Situation 3: New print head assembly 2031154-001 in connection with older version of PCB Digital with short print head ribbon cable.

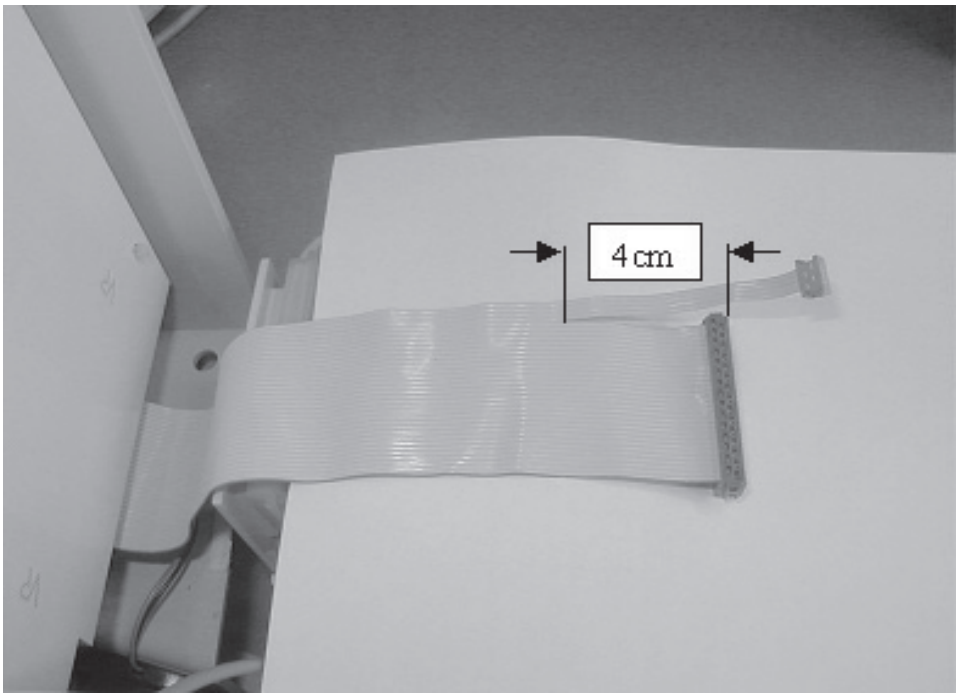

- Enlarge the cut in of the 4-pol motor ribbon cable to ca. 4cm

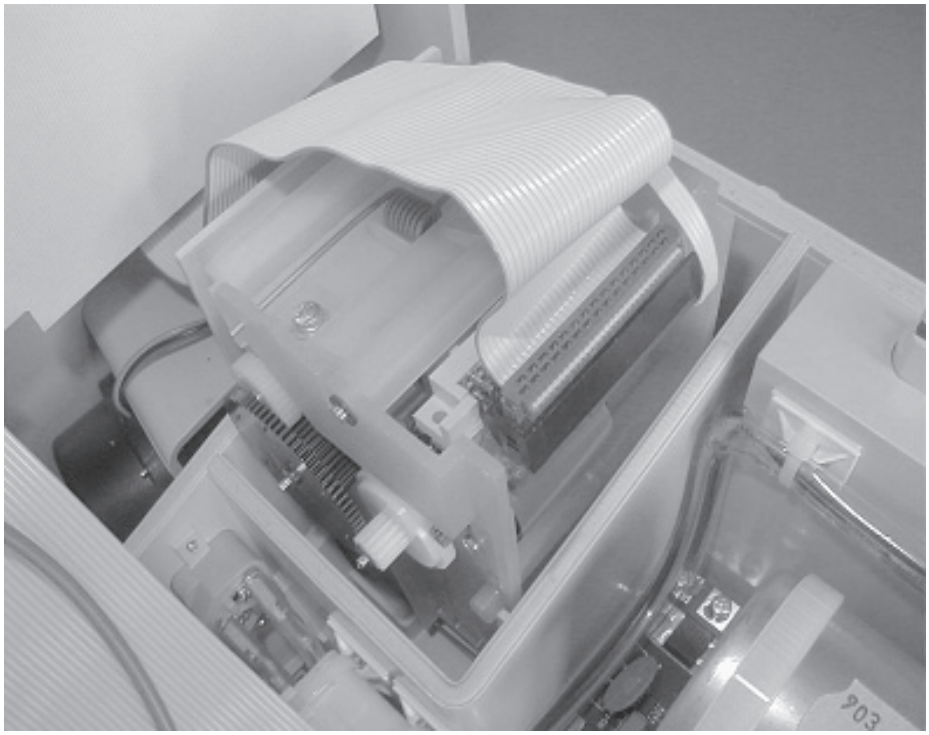

- Put the PCB print head adapter to the print head
- Connect the motor and print head ribbon cable

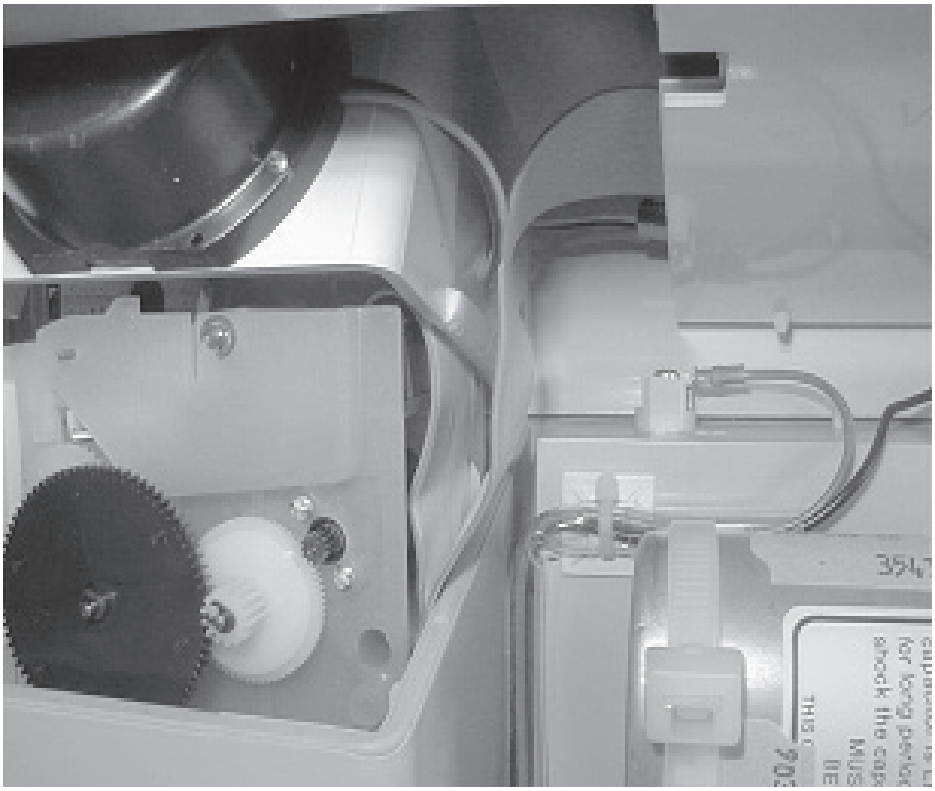

- Fold the print head ribbon cable into the gap between the recorder and the lower housing shell before drop the upper housing shell. This prevents that the upper housing shell drags the print head cable down together with the print head. If this is ignored a bad print out can be occur.

For final test please start a print out and verify the correctness. The test has to be done after the CardioServ's upper and lower housing shell is closed and screwed together.

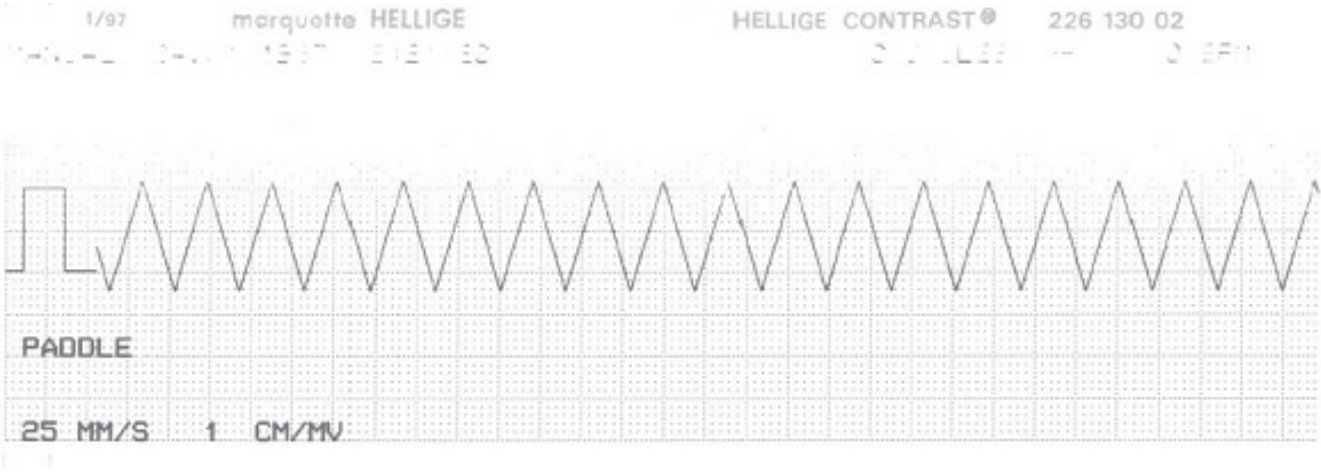

If the print head ribbon cable is not accurate mounted parts of the print out are not or not accurate printed.

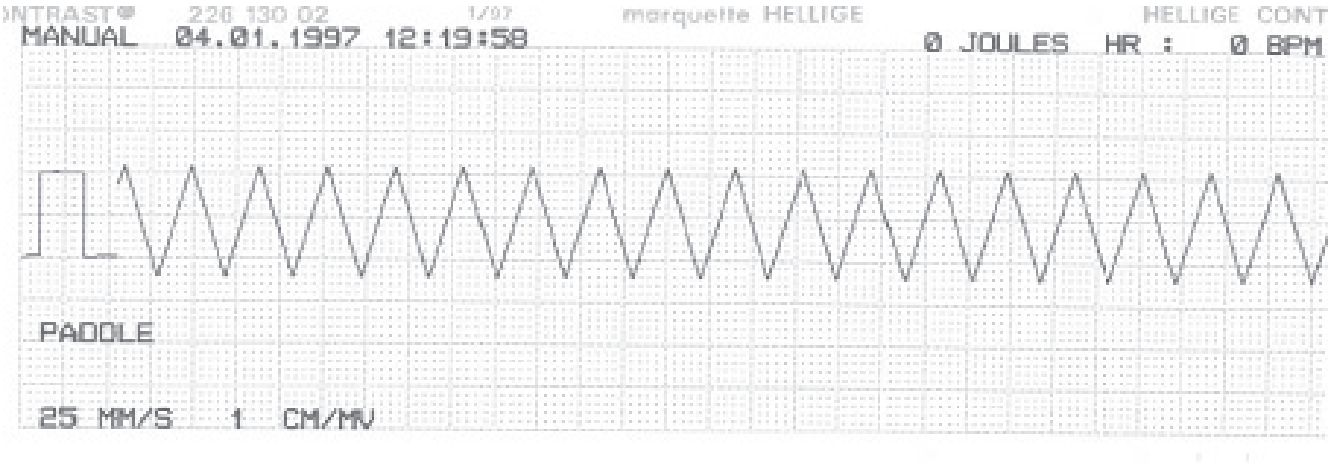

If the ribbon cable is accurate mounted the print intensity is good and homogeneous.

Print head earth cable from device according to table below (see device label)

CardioServ	From revision and higher
10111701	ZAT
10111701-L	Q
10111702	ZAM
10111703	ZAT
10111704	ZAT
10111705	ZAT
10111706	ZAM
10111707	ZAM
10111708	ZAL

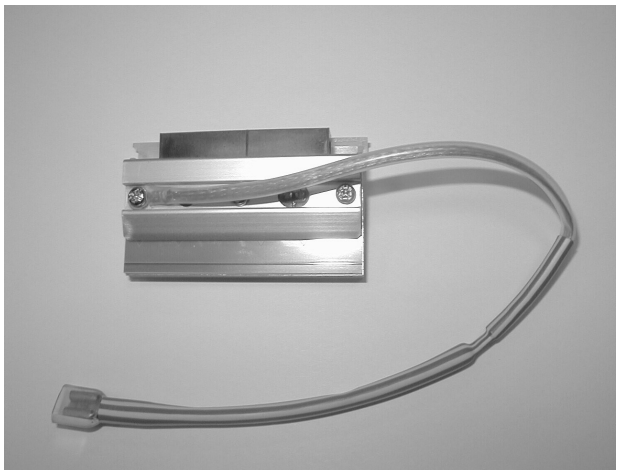

Print head earth cable fixed on print head

Unscrew print head screw. Apply screw thread with locking paint. Fix ring tongue of yellow/green earth cable with screw on print head.

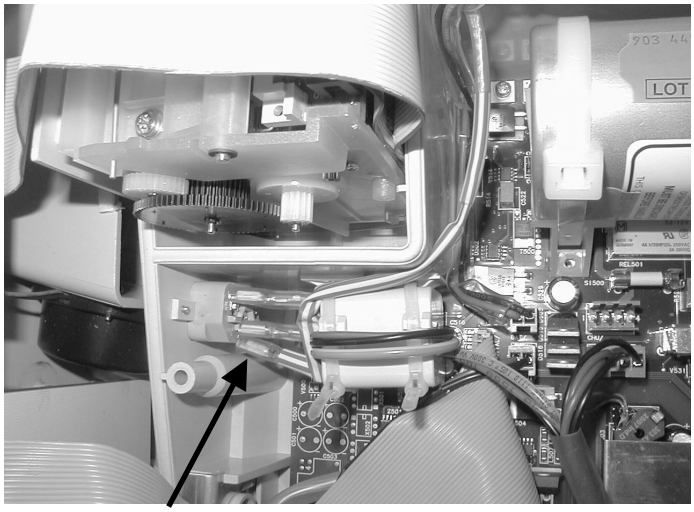

Print head earth cable connected to PE on power input module

The print head earth cable is part of the cable assembly 383 273 39.

7. Troubleshooting Hints

Device cannot be switched on during line-power operation:

- 230-V power supply via power supply unit OK ? Measure at connector CA.
- Connector 230-V plug to power supply unit OK ?
- Fuses on power supply unit OK ?
- Lead line-power supply unit -- PCB Analog OK ?
- Lead PCB Analog -- PCB Digital (2-pin power supply 16V) OK ?
- Lead PCB Analog -- PCB Digital (50-pin control) plugged in correctly?
- 16 V on PCB Analog at connector ? no --> power supply unit defective or short-circuit (power supply unit tackered)
- Fuse SI500 (16V) on PCB Digital OK ?
- Fuse SI502 (5V) on PCB Digital OK ?
- “Device On Signal” PWON_ present and 16V available on PCB Digital : yes --> Digital defective
- PCB Analog or PCB Digital defective ?

Device cannot be switched on during battery operation:

- Battery charged?
- Lead battery contacts -- PCB Analog OK ?
- Fuse for battery on PCB Analog OK ?
- Connector battery contact and connector power supply PCB Digital confused
- Fuse SI500 (16V) , SI502 (5V) on PCB Digital OK ?
- PCB Analog defective ?

Device does not print out:

- Paper inserted correctly? (thermosensitive side facing up)
- Flat strip cable to printer OK ?
- Mechanical failure in paper transport, paper feed ?
- Without paper platin runs approx. 1 sec
- Flap not completely closed
- Print key on membrane keypad does not respond when pressed (perform key test)
- Does motor run ? or printhead voltage there ? or movement on the data lines to printhead ? no --> PCB Digital defective ?

Pacemaker mode disabled

- No +5V power supply on floating side
- Pacemaker cable not plugged in correctly

No display on LCD

- Contrast poorly adjusted ? (change contrast)
- Contrast keys defective ? (perform key test)
- Connector for illumination or data OK ?
- Illumination defective ?
- Fuse SI500 (16V) , SI501(background illumination) , SI502 (5V) on PCB Digital OK ?
- Display defective ?
- PCB Digital defective ?

No ECG on display via ECG cable or paddles

- Connector to ECG socket OK ?
- Connector to paddles OK ?
- Lead PCB Analog -- PCB Digital (50-pin control) OK ?
- ECG via paddles or ECG cable OK : --> PCB Analog defective
- PCB Analog or PCB Digital defective ?

Battery does not charge:

- Yellow LED must glow when battery is being charged
- Fuse SI501 on PCB Analog defective ?
- Check connector to battery
- Voltage on power supply unit under 16 V

Self-test:

F1 + F5 simultaneously to go to configuration and with Print print out the current error messages.
In configuration with F3 + F4 key test and carry out printer adjustment (Print key).
In configuration with F3 + F5 restore default (factory setting).
Display test chessboard pattern at power up.
Error in time base : The clock must be set once or PCB Digital defective.
Error in energy storage : Adjust energy storage / measurement or PCB Analog defective.
Error RAM, ROM, Display-RAM, permanent memory, watchdog : PCB Digital defective.
Error Charge or Discharge actuated (key sticking).

Troubleshooting hints for PCB SPO2

When the PCB SPO2 is inoperative or operates defectively check the 5V floating voltage. The voltage must lie between 4.8-4.9V.

7.1 Error Codes in the CardioServ Self-Test Screen

0002 : RAM error
0004 : RAM error
0008 : RAM error
0010 : ROM error
0020 : EEPROM error
0100 : Clock error
0200 : Charge key error
0400 : Discharge key error
0800 : Energy outside range

These errors can occur in combination : RAM + ROM : 0012

SpO2

No. 0	“No”	a),	internal, no error
No. 1	“RAM”	b),	MP204, RAM error
No. 2	“ROM”	b),	MP204, ROM error
No. 3	“Data Link”	c),	MP204, serial communication to SpO2 module is defective
No. 4	“Command”	c),	MP204, defective commands from CardioServ to SpO2 module
No. 5	“Value”	c),	MP204, defective values from CardioServ to SpO2 module
No. 6	“Calibration”	e),	MP204, calibration error
No. 7	“Not used”	e),	MP204, SpO2 is in calibration mode
No. 8	“Calibr. request”	c),	MP204, calibration request rejected by SpO2 module
No. 9	“Communication”	c),	MP204, defective commands from CardioServ to SpO2 module
No. 10	“Over-current”	d),	MP204, excessive sensor current identified
No. 11	“Post Aver Time”	e),	internal, Post Average Time (integration time setting not adopted)
No. 12	“Post Aver Time”	e),	internal, Post Average Time (integration time scanning rate not adopted)
No. 13	“Defect”	e),	internal, undefined error

a) no error, everything O.K.
b) SpO2 module no longer functions, replace SpO2 module
c) check connection from main board to the SpO2 module
d) replace sensor or cable and switch CardioServ off and then on again
e) switch CardioServ off and then on again

For your notes

8. Adjustment Instructions

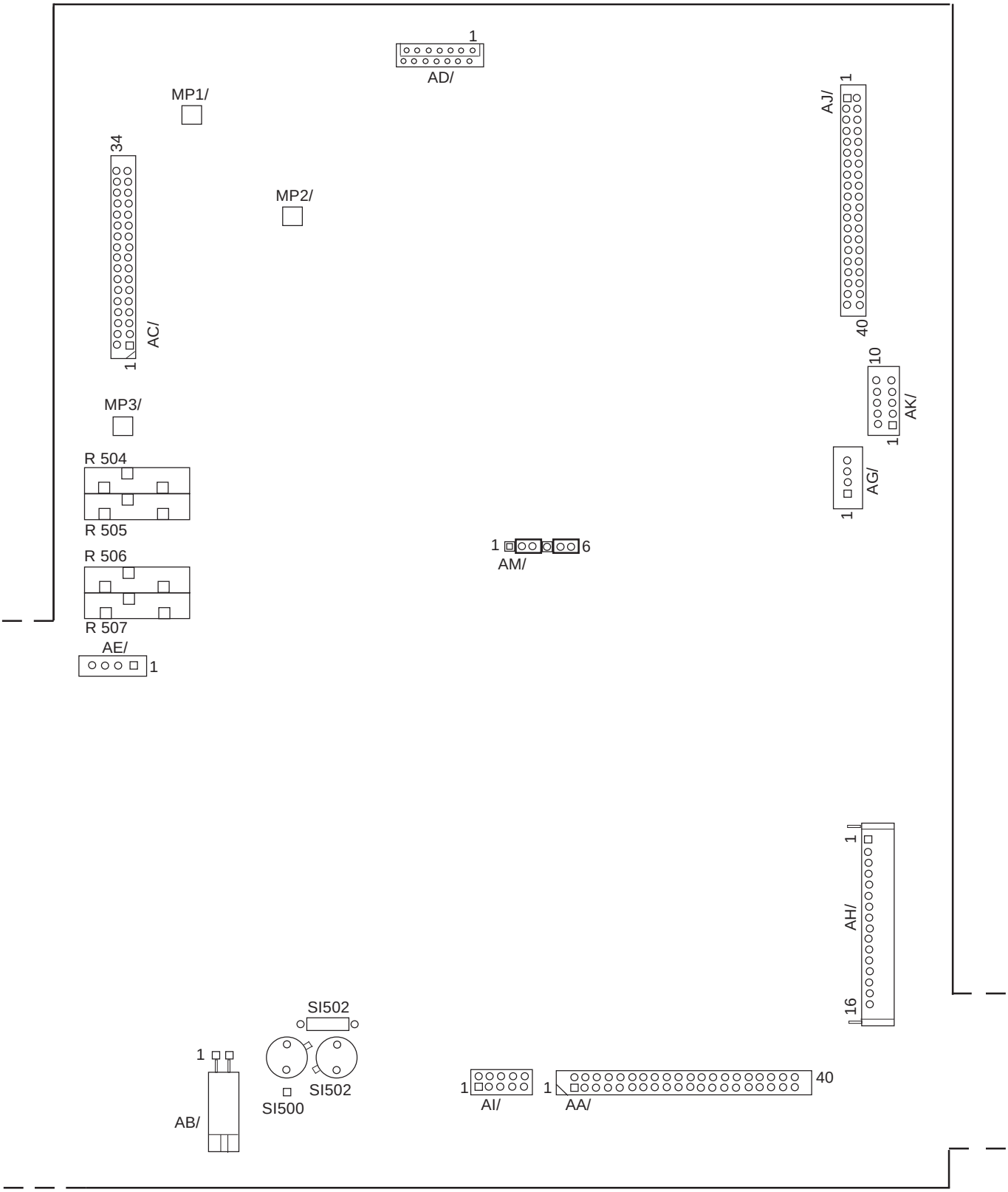

PCB Digital 388 032 06
PCB Digital 388 032 53

Motor Adjustment on PCB Digital

What to adjust or to check?	What to measure with?	How to activate testing mode?	Where to turn?	How much and exact?	What else to note?
Adjust motor speed under small load (recorder flap open) on stationary motor pinion.	Flash at motor pinion with stroboscope (LED).	1) Call up configuration (Press F1 + F5 simultaneously) 2) Call up key test (Press F3+F4 keys simultaneously) 3) Press Print key Speed selector	Speed selector R 506	Stroboscope frequency = 181.07 Hz When a square wave generator activated by LED is used, a low key ratio should be observed.	Motor should be at room temperature. The testing mode terminates automatically after a few seconds. This can be suppressed by pressing any key.
Adjust motor speed under normal load (recorder flap closed) and small load (recorder flap open) so that there is no difference in RPM.			Compensation adjuster R 505		If the RPM changes after compensation adjustment, this should be corrected once more only with R521.

No Stroboscope Available: Motor Adjustment on PCB Digital

What to adjust or to check?	What to measure with?	How to activate testing mode?	Where to turn?	How much and exact?	What else to note?
Adjust motor speed under small load (recorder flap open wide enough so that paper is just transported)	Remeasure grid printout. min. 200 mm	1) Call up configuration (Press F1 + F5 simultaneously) 2) Call up key test (Press F3+F4 keys simultaneously) 3) Press Print key	Speed selector R506	< 1%	Motor should be at room temperature. The testing mode terminates automatically after a few seconds. This can be suppressed by pressing any key.
Adjust motor speed under normal load (recorder flap closed)			Compensation adjuster R505		The adjust-procedure is complete when the RPM is 25 mm/s under small load and normal load.

Heating Time Adjustment on PCB Digital

Note: There exists two versions of printhead. The old one have no inscription, the new one have the inscription R 650.

What to adjust or to check?	What to measure with?	How to activate testing mode?	Where to turn?	How much and and exact?	What else to note?	printhead legend
Heating time	Connect oscilloscope to MP2/1 and MP1/1 (GND)	Press Print key in main menu	Heating time adjuster R507	referred to 22°C printhead temperature:	Adjustment ensues at 25 mm/s. Important: printhead warms up during printing	
				500 µs ±1 %		(blanc)
				590 µs ±1 %		R 650

5-V Overvoltage Cutoff Threshold on PCB Digital

What to adjust or to check?	What to measure with?	How to activate testing mode?	Where to turn?	How much and exact?	What else to note?
5-V power supply monitoring	Voltmeter. Input impedance >= 1MOhm	Between MP3/1 and GND	R504	2,720V <1%	

Control of the Power Supply Voltages on PCB Digital

What to adjust or to check?	What to measure with?	Where to measure?	How much and exact?	What else to note?
5-V power supply	Voltmeter.	Between +5V and GND	5,0V +/-2%	
+22-V power supply	Voltmeter.	Between +22V and GND (C504)	+22V +/-5%	Recorder stationary
-23-V power supply	Voltmeter.	between -23V and GND	-23V +/-5%	

PCB Analog

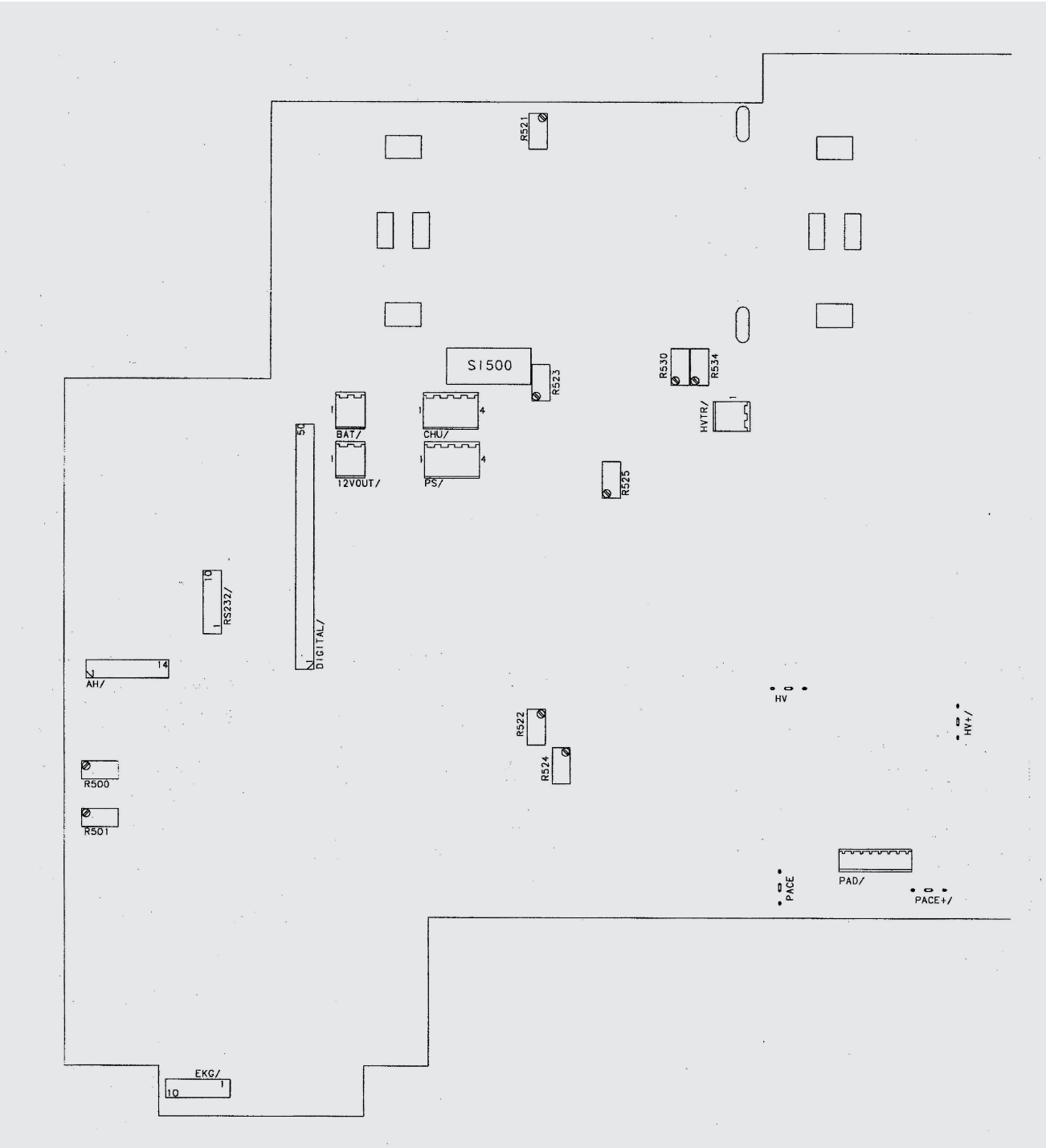

PCB Analog	303 445 43	(for Service)
PCB Analog	388 032 05	(for Production)

Energy Adjustment on PCB Analog

Replace PCB Analog if energy adjustment is not correct. FRU boards are completely adjusted and must not be readjusted.
Energy adjustments must only be made at the factory.

EC Amplifier Adjustment on PCB Analog

What to adjust or to check?	What to measure with?	How to activate testing mode?	Where to turn?	How much and exact?	What else to note?
Offset EC amplifier cable	Optical scale	Display	R501	Baseline offset < 1 mm	Toggle amplification between 0.5, 1 and 2
Amplification EC amplifier cable	Optical scale	Printer	R500	10 mm +-0.5 mm	ECG pickup 1 mV
Offset EC amplifier paddles	Optical scale	Display	R524	Baseline offset < 1 mm	Toggle amplifi-cation between 0.5, 1 and 2
Amplification EC amplifier paddles	Optical scale	Printer	R522	10 mm +- 0.5 mm Connect ECG pickup with paddles Amplitude 1 mV	

9. Technical Specifications CardioServ/CardioServ VF

The “Technical Specifications” section describes the technical data of the device valid at the time of printing.

Operating modes

* manual (non-synchronized, synchronized)
* semiautomatic (VF)
* semiautomatic/button (VF)
* semiautomatic/dongle (VF)

Energy selection

adjustable, energy to be delivered into 50 ohms displayed digitally

* selectable energy levels, energy to be delivered into a 50-ohm resistance (max. energy of 50 joules for internal defibrillation):
  2
  5
  7
  10
  20
  30
  50
  100
  150
  200
  300
  360 joules
* possible deviation from selected energy below values specified by IEC

Energy storage

by means of capacitor, capacitor is charged from battery, from a 12-volt power source (emergency vehicle) or from the power line (95 to 240 V; 49 to 65 Hz); when capacitor charging is terminated buzzer sounds:

* capacitor charging time for energy setting of 360 J:
  – from power line: typically 8 s
  – from fully charged battery: typically 8 s
  – from partially discharged battery: typically 10 s (15 s max.),
  measured at least 5 minutes after 15 shocks of 360 joules each
  (for 200 joules typically 4 s)

Defibrillation shock
capacitor discharge via induction coil (damped serial resonant circuit), pulse shape = a sinusoidal halfwave with decay period:
* pulse duration for an external resistance of 50 ohms approx. 4 ms, measured from the beginning of the pulse to the intersection of the zero line and the inflection point of the trailing pulse edge
* in synchronized mode the defibrillation shock is released within 30 ms of the R-wave trigger

Discharge circuit
serial oscillating circuit in series with external resistance (patient):
* capacitance 35 µF
* inductance 26 mH
* equivalent resistance 7.35 Ohm

Pulse output
isolated, no conductive connection with enclosure, open-circuit and short-circuit-proof
* isolation test voltage 8 kV DC, type CF according to IEC requirements

Safety discharge
capacitor discharge via internal load resistance:
* when the defibrillation shock is not triggered within 30 s after charging
* when the defibrillation shock is triggered, but the discharge circuit is interrupted, after approx. 0.2 s
* immediately when reducing the selected energy during or after charging
* when the selected energy is not reached, after 32 s
* in the event of technical malfunctions

Test features
* pilot lamp for battery charging
* defibrillator test by discharging the stored energy into the internal 50-ohm load resistance; 3-digit display of the delivered energy
* warning on LCD when discharge circuit is interrupted (e.g., defibrillation paddle not applied)
* automatic defibrillator test on power up with display of error message, if applicable

Synchronization
with ECG signal of either polarity:
* min. ECG amplitude for reliable triggering approx. 0.5 mV with QRS duration of 80 ms

ECG signal input via paddles
ECG signal acquisition via defibrillator paddles, ECG trace displayed on LCD, automatic switching to ECG electrodes when patient cable is connected; cardioversion both via ECG patient cable and via paddles; differential input; isolated, class CF according to IEC, with overvoltage protection

* input voltage range ±4 mV
* input impedance >1.5 Mohm
* max. polarization voltage ±1V
* frequency response optimized for best standard ECG representation
* common-mode rejection >80 dB
* patient leakage current: in normal condition <10 µA, in single-fault condition <50 µA
* detection of pacing pulses
  – pulse duration d_p >approx. 0.1 ms <2.0 ms
  – pace marker independent of polarity
  – pulse amplitude a_p ±20 to ±700 mV
  – reverse-current pulse a_0 ±1 mV
  – time constant t_0 = 25 to 100 ms

ECG signal input via patient cable
via ECG electrodes, automatic switching to ECG electrodes when patient cable is connected; cardioversion both via ECG electrodes and via paddles; differential input, symmetrically referred to N, isolated, class CF according to IEC; 7 standard leads selectable via lead selector; input with overvoltage protection (defibrillation-proof):

* input voltage range ±4.4 mV for recorder,
  ±4 mV for display
* input impedance >2.5 Mohm for 10 Hz
* common-mode dynamic range ±3 V
* differential DC voltage compatibility ±1 V
* common-mode rejection (CMRR) R,L referred to N 65 dB, N referred to chassis >110 dB
* QRS trigger (measured according to AAMI EC 13): trigger threshold 0.3 mV (for QRS widths between 40 ms and 70 ms and between 30 and 250 BPM)
* bandwidth .5 to 60 Hz
* patient leakage current: in normal condition <10 µA, in single-fault condition <50 µA
* ground leakage current: in normal condition .5 mA, in single-fault condition 1 mA
* voltage resistance referred to circuit reference 4 kV

* detection of pacing pulses
  – pulse duration d_p >approx. 0.1 ms <2.0 ms
  – pace marker independent of polarity
  – pulse amplitude a_p ±20 to ±700 mV
  – reverse-current pulse a_0 ±1 mV
  – time constant t_0 = 25 to 100 ms

Signal display
backlit LCD, 2-channel erase bar mode, calibration pulse in left-hand corner (for ECG) alphanumeric presentation of alarm messages, sensitivity, leads, systole blinker, alarm limits, heart rate, energy and softkey labels
ECG freeze with simultaneous display of the current ECG and (for units with SpO_2 function) plethysmogram at a smaller scale
ECG trace 1.5 times larger than on recording: with a sensitivity of 1 cm/mV a 1-mV signal has an amplitude of 1.5 cm on the display
* erase bar sweep speed 25 mm/s
* trace length in real-time mode 4.6 s
* display dimensions: 115 mm wide, 86 mm high
* resolution 320 x 240 pixels (pitch of .36 x .36 mm)
* displayed image can be rotated 180°

Signal transmission
signal input —> amplification —> signal sampling —> AD conversion —> digital processing —> LCD and recorder
* selectable sensitivity: .5-1-2 cm/mV (with max. sensitivity of 2 cm/mV a 1-mV input signal is 2 cm in amplitude on the recorder and about 3 cm on the LCD), amplitude limited to approx. ±2 cm on the recorder and approx. ±3 cm on the LCD
* signal sampling rate 1000 Hz at mains frequency of 50 Hz, 1200 Hz at mains frequency of 60 Hz

ECG signal output (“Option” port)
* ECG lead shown on display
* 1 V output signal for 1 mV input signal (at 1 cm/mV)
* U_{max} ±2 V
* overall error < 3% (typical)
* R_L 500 Ohm min.
* delay < 150 ms (not suitable for precise triggering)

9 = ECG
10 = chassis

Systole check

* heart symbol flashing on the LCD
* QRS beep (can be disabled)
* AC line filter 50 Hz (60 Hz); interference elimination
* muscle filter
  low pass filter with f_{lim} = 27 Hz (50 Hz mains)
  f_{lim} = 32 Hz (60 Hz mains)
  cut-off at 83/100 Hz

Heart-rate measurement

derivation of trigger pulses from the ECG of either polarity, adaptive trigger threshold, calculation of the average rate, storage of the result, 3-digit display on LCD, alarm limits to the left of the reading:

* measuring range 15 to 300 BPM
* digit height of HR reading 7.5 mm
* digit height of alarm limits 2.5 mm
* min. amplitude for reliable triggering >.25 mV for ECG signal with a QRS duration of 80 ms

Alarm system

electronic release of alarm

* when the HR violates one of the set limits for at least 5 s: alarm tone sounds (can be disabled), message “Alarm, high HR” or “Alarm, low HR”, recorder starts (if configured)
* when at least one of the selected electrodes drops off: audible signal (if patient cable is plugged in), message “Alarm, Electrode” on display
* alarm limits adjustment range 15 to 300 BPM (not overlapping)
* digit height of alarm limits 2.5 mm
* keys to cancel alarm and to silence alarm tone
* softkeys to adjust alarm limits
* when set up for VF detection running in the background, alarm release can be enabled or disabled

Recording
delayed recording of the ECG stored in the signal memory (strip length 16 s, incl. 4-s history) in the event of an alarm plus alphanumeric annotations on the paper margin:
– heart rate
– lead
– filter
– date
– time
– paper speed
– cause of recording (defib, alarm, manual)
– selected energy
– delivered energy
– sync mark
– text (name of user/hospital/practice)

After the ECG recording, a patient ID sheet is printed indicating name, date of birth, user, comments, date, time, energy and alarm limits.
Direct writing with rectangular coordinates using thermorecording technology (printhead with electronically controlled thermal elements records on thermosensitive paper), baseline fixed at the center of the space available for recording of the ECG trace, grid imprint, roll paper, paper transport by electronically controlled DC motor, limited duration of transport

* number of recording channels 2
* paper width 55 mm
* roll diameter 60 mm max. (roll with 40 m of **GE Medical Systems** *Information Technologies* CONTRAST®)
* printhead resolution vertical 6 dots/mm, horizontal 24 dots/mm
* paper speed 25 mm/s ±5%
* paper transport after both manual and automatic start 16 s (incl. history of 4 s after automatic recorder start)

To prevent damage to the printhead, use only the original **GE Medical Systems** *Information Technologies* CONTRAST® chart paper.

Memory
* storage of 40 ECG strips initiated by defibrillation or alarm with a length of 16 seconds and a history of 4 seconds each, incl. a full report
* storage of the 80 most recent actions (e.g., power on, power off, alarms, defibrillation energy) incl. date and time

SpO_2

* saturation: 0 to 100 %, in 1-% increments
* frequency: 0 to 250 BPM, in 1-BPM increments
* alarm limit: off, 15 to 100 %
* display of plethysmogram
* C-LOCK ECG synchronization
* integration time: 4, 8 and 12 seconds
* measuring accuracy: 70 to 100% ±2 digits
  50 to 69% ±3 digits
  pulse display 1.2% or ±1 BPM

Pacemaker

* operating modes: demand, fixed-rate
* pacing rate: 30 to 180 BPM
* pacing current: 0 to 200 mA (for 500 Ohms),
  voltage up to 120 V
* pulse width: 40 ms
  20 ms (for pacing rate of 155 BPM and higher)
* pulse shape: monophase square-wave pulse
* error message “Check Electrode” when pacer output differs from set value (±20% or ±20 mA)

Power

from the power line

* 95 V to 240 V, 49 Hz to 65 Hz
* power consumption at 230 V
  – during monitoring 160 mA
  – during capacitor charging 750 mA
* from a 12-Volt power source of the emergency vehicle
* from exchangeable, rechargeable NiCd batteries
* rated voltage 12 V
* rated capacity 1.4 Ah
* battery is charged while inserted in the unit
* charging time for depleted battery approx. 16 hours

* operating time with a fully charged battery approx. 35 defibrillation shocks of 360 joules each (into 50 ohms) or 2 hours of monitor operation (1.2 hours with pacemaker and SpO_2 measuring system)

Operational readiness
4 s after power up (incl. automatic selftest)

Operating position
any

Environment

Operation

under the following conditions regarded as normal:
* temperature between 0 and +40 °C
* rel. humidity between 30 and 95%, no condensation
* atmospheric pressure between 700 and 1060 hPa

Storage and transport
* temperature between -20 and +60 °C
* rel. humidity between 10 and 95%, no condensation
* atmospheric pressure between 500 and 1060 hPa

Dimensions
* width 432 mm
* height 172 mm
* depth 377 mm

Weight
* approx. 8 kg (incl. battery)

10. Maintenance and Technical Inspection

Technical Inspections

Testing the operating and functional safety of the CardioServ is carried out according to the checklists below.
They serve the experienced technician when inspecting the instrument. A knowledge of how to operate the CardioServ in compliance with the operator's manual is assumed.

The tests are based on the calibration devices described below. Where possible, the tests should be conducted using the customer's accessories to also detect any defective accessories automatically.
Using calibration devices other than those named below may require changes in the tests and tolerance specifications.

10.1 General Information

The CardioServ is an instrument with an internal power source assigned to Protection Class I and Class IIb (MPG).
The instrument is suitable for external and internal defibrillation (as well as cardioversion).
The heart rate is monitored with configurable alarm limits. Upgrade options include a transcutaneous pacemaker and / or SPO2 calibration module; the latter can also be monitored.

In addition, the CardioServ VF has the following operating modes:
- manual
- semi-automatic with the option to switch over to "manual" by pressing a key
- semi-automatic with the option to switch over to "manual" with the help of an encoding module
- as a semi-automatic instrument

Caution!

CardioServ uses high voltage. The inspection should be referred to independent persons with adequate training and experience.
These inspections must be carried at least **once a year**.

10.2 Testing Equipment

ECG simulator	
Defib tester with pacemaker test functionality, e.g., Fluke 7000DP	
Safety tester, e.g., NSE	
1X SPO2 simulator, e.g., NELLCOR SCR-MAX	
1X Finger probe	701 240 21
1X Trunk cable for SpO2 sensor	303 443 58 used up to S/N 101157661
1X Trunk cable for SpO2 sensor	2026751-001 used from S/N 101157662
Dongle (optional for CardioServ VF)	303 445 15

Recommended Test Equipment

- Safety Tester for measurements according to IEC 601.
- Testing connector according to the following drawings.

Testing connector for measuring patient leakage current

The following wiring of testing connectors is recommended for the technical inspection of module input type BF (body floating) and type CF (cardiac floating).
The catalog numbers of the **GE Medical Systems** *Information Technologies* components are given below.

When making the connectors observe the following configurations:
The diagrams of the plug inserts in this document are always as viewed from the inside of the connector shell.

- Testing connector for the temperature input

1 x	2-pin jack plug	91530000
1 x	Telephone socket or matching isolated plug connection for testing case	91534800

The two jack plug poles are short-circuited with one another and connected to the telephone socket.

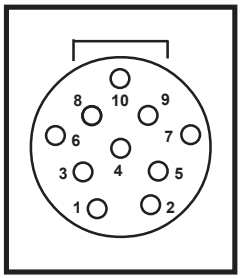

- Testing connector for ECG input

1*	Connector	91541378
10*	Contact pins	91541394
1*	Telephone socket or matching isolated plug connection for testing case	91534800

Short-circuit all 10 contact pins with one another and connect to telephone socket.

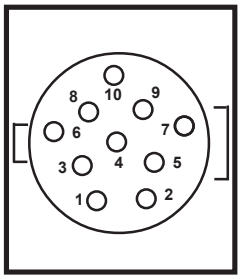

- Testing connector for SaO2 input

1*	Connector	91541871
7*	Contact pins	91541394
1 *	Telephone socket or matching isolated plug connection for testing case	91534800
6*	10 kohm resistor	92184443

Connect pin 10 directly to the telephone socket.
Connect pins 1,4,5,6,7,9 via 10 kohm resistor to telephone socket.

Measure patient leakage current on the Defi electrodes

The patient leakage current on the Defi electrodes is measured directly on each paddle.

10.3 Visual Check

Test instrument and accessories to ensure that
- fuse links have the rating proclaimed by the manufacturer
- safety labels and inscriptions on the device are clearly legible
- the mechanical condition will allow the device to be put to further use
- any soiling has no effect on safety of operation.

The defibrillator electrodes as well as handles and holder recesses must be free of any cream residue.

The defibrillator electrodes, pacemaker cable, ECG cable , SPO2 cable and CardioServ power cord should be checked for any visible external damage to the insulation and strain relief.

10.4 Performance Check

10.4.1 Power-up Test

Switch the instrument on with the energy selector switch (turn rotary switch to first position ECG).
A chessboard pattern appears on the display for about 2 seconds. A performance test follows and the software release number is displayed. If the self-test is O.K., no error message appears on the screen. When error message occurs, see page 39 "Error Codes".

10.4.2 Key Test

Press the F1 and F5 keys simultaneously. The configuration screen appears. By pressing the F3 and F4 keys simultaneously the key test screen appears in the self-test mode.
By pressing each key in turn, the function of the keys can be tested. The key pressed appears in the key test screen with its assigned function. This screen also provides self-test information. The self-test screen also shows the software version, its checksum and the results of the CardioServ self-test. The options built into this instrument are displayed alongside the results of the self-test, pacemaker version, VF, date, time and SPO2 version plus error status.

10.4.3 Printer Test

The printer is tested in the standard mode. Check that there is some paper and press the Print key. A manual printout will then be printed out at 25 mm/s.
Using a ruler check the printout grid. In the event of a deviation, reset the motor speed (for details see section 8 Motor Adjustment).

10.4.4 Energy Test

Connect defibrillation electrodes to Defi. The paddles must be locked in place in the Defi holders.

Prerequisite for the following test < energy 360 joules in max. 9 seconds>
The Defi battery must be fully charged or the Defi must be connected to the mains with a power cord.

Switch instrument on. Switch energy selector switch to 360 joules. Energy must be available after approx. 9 seconds. Trigger energy charge operation by pressing the Charge Defi key in the electrode handle.
As soon as the charge operation is complete a beep sounds. Release the defibrilla tion pulse with the **Charge Defi** key and the **Defib** key within the next 30 s.

The values (tolerance range) for the energy released is given in the table below.

Energy adjustments must only be made at the factory.

Energy selected	Energy available/released in CardioServ display	Energy released in joulemeter
2	1-3	1-3
5	4-6	4-6
7	6-8	6-8
10	9-11	9-11
20	19-21	19-21
30	29-31	29-31
50	49-51	49-51
70	68-72	68-72
100	97-103	97-103
150	146-154	146-154
200	194-206	194-206
300	291-309	291-309
360	350-370	350-370

Test the energy levels 2J-150J first. Wait approx. 1 minute. Then test the energy levels 200J-360J.

10.4.5 Pacemaker Test (with Defib/Pacer Tester)

Caution: During the pacemaker test the energy selector switch may be set to the ECG position only. Do not actuate the Defib and Charge keys.

Connect Defib/Pacer Tester to CardioServ.
Use a set of disposable electrodes (2059144-005 or 2059145-010). Remove insulation on cable ends and solder banana connectors on them.

Switch CardioServ pacemaker on and select **operating mode Fix**.

Use the +mA, -mA keys to select the pulse current.

Use the +P/min, -P/min keys to select the pulse rate.
Pulse current and pulse rate shall be within ±5% tolerance.

Pulse width Demand, Fix:	40 ms
> 155 P/min	20 ms

Switch pacemaker on Defi on and select **operating mode** **Demand**.

Use the +mA, -mA keys to select a pulse current between 5 mA and 200 mA.

Use the +P/min, -P/min keys to select a pulse rate of 60 pulses.

Use the ECG simulator and set its pulse rate below 60 pulses. The pacemaker starts pacing.

Set the ECG simulator pulse rate above 60 pulses. In this case the pacemaker stops.

10.4.6 SPO2 Performance Check

Connect the SPO2 trunk cable to SPO2 input connector of CardioServ.
Connect the SpO2 simulator to the trunk cable. The SPO2 value and the waveform (plethysmogram) appear after a few seconds on the CardioServ display.

Monitor settings on CardioServ

Activate pulse frequency display by pressing F5 **(next)**, followed by switching to **(HR Source Pulse)** with F1 **(HR Source Pulse)**.

Displaying waveforms and parameter readings

- An SpO2 waveform should appear on the screen.
- An SpO2 value according to the table below should be displayed.
- The pulse rate should be displayed according to the table below.

Simulator value SpO2	Value displayed
70	68% - 72%
90	88% - 92%

Simulator value pulse rate	Value displayed
60	1.2% ±1 bpm
200	1.2% ±1 bpm

Remove the SpO2 simulator and connect an SpO2 finger probe. Check if it works correctly.

10.4.7 ECG Test

Connect the electrode cable to the Defi. Use a standard ECG signal generator to generate ECG signals. Use either a 3-lead trunk cable 223 288 01 or a 5-lead trunk cable 223 419 05 with 5-lead electrode cable 384 018 10.
Switch Defi to monitor mode. The ECG and the heart rate adjusted on the ECG simulator appear on the display. The upper and lower limits should be tested to ensure they are enabled. The error messages when electrodes become detached should also be checked. The error message <**Electrode error**> appears on the left-hand side of the display. It is important to ensure that the ECG lead is selected so that the corresponding electrode is tested. In the case of the paddles lead the error message <**Electrode error**> appears on the screen when the paddles are taken out of their holders on the CardioServ.

10.4.8 Cardioversion Test

- Connect the ECG electrode cable to the CardioServ. Use either a 3-lead trunk cable 223 288 01 or a 5-lead trunk cable 223 419 05 with 5 lead electrode cable 384 018 10.
- Connect the ECG leads to the defib tester
- Select 60 BPM ECG pulse rate on defib tester
- Set energy selector switch to any energy setting
- Select sync mode by pressing the Sync key on CardioServ keypad
- Verify that “Sync” appears on display and trigger marks are visible above the QRS complexes
- Select Sync test on defib tester
- Connect the paddles to the defib tester
- Charge energy
- Simultaneously press and hold the Shock buttons on both paddles. Triggering is affected by the peak of the QRS complex of the beat. After shock Cardioversion function is automatically reset.
- If the measured delay time on defib tester is greater than 60ms, the test has failed.

10.4.9 Option Socket Input Test (optional for CardioServ VF)

The option socket input can be tested with the dongle No. 303 445 15 in the configuration. If you can enable the operating mode Semi-automatic/Dongle in the configuration (press F1 and F5 keys simultaneously) of semi-automatic defibrillators, this indicates that this function is O.K.

10.5 Battery

A battery charge check can only be performed in the battery service unit Part No. 701 279 01. This tests takes at least 2 hours, max. 3 hours. The service manual for the battery service unit can be ordered under Part No. 227 494 11.

If no battery service unit is available, the battery should be replaced every 2 years.

Battery Maintenance

Proper maintenance of NiCd batteries is essential and considerably promotes their proper performance. Routine preventive maintenance should be carried out by qualified service technicians on a regular basis (recommended interval: 30 days). If batteries are repeatedly partially discharged, the resulting "memory effect" max dramaticaly reduce the battery capacity.
This effect can be efficiently minimzied by regular conditioning. If the capacity of a relatively new battery is drastically reduced, the battery max be reconditioned by repeated charging and discharging.

Monthly Battery Maintenance (Conditioning) and Checks

1. Disconnect CardioServ from the power line and discharge fully charged battery in the monitoring mode. To do so, set energy selector switch to (SpO$_2$ sensor not connected) and wait until device switches off.

2. Check how long it takes before battery is depleted. If the time is less than 1.8 hours, the battery is too old or improperly maintained and should be replaced.

3. Recharge the battery. This will take 16 hours.

Rechargeable batteries require special maintenance and continued checks to assure they function in emergency situations. It is normal for batteries of this type to selfdischarge when not in use.

11. Safety Analysis Test

11.1. General introduction

The suggested Safety Analysis Tests refer to the international standard IEC 601-1.
The tests are generally performed with Safety Testers, on most of them, the measuring circuits according IEC 601 are already implemented.
The following is a general description of the tests to be performed. For the handling of your Safety Tester follow the user manual.

The tests may be performed under normal ambient conditions of temperature, humidity and pressure and with line voltage.
The leakage currents correspond to 110 % of rated voltage for the tested unit. Most Safety Testers take this into account, otherwise the measured values have to be calculated.

11.2 Recommended Test Equipment

- Safety Tester for measurements according to IEC 601.
- Testing connector according to the following description.

11.3 Protective Earth Resistance Test

The protective earth resistance from power connector to any protective earth connected exposed conductive part is measured.

Because the protected earth is not connected to other touchable conductive parts (contacts to battery, contacts to car holder) “as a protected earth connection”, the protected earth resistance test is not necessary. These other touchable conductive parts are grounded just for EMC reasons.
The protected earth begins at CardioServ AC connector and ends inside the CardioServ power supply on the left mounting screw, near the power supply line connector.

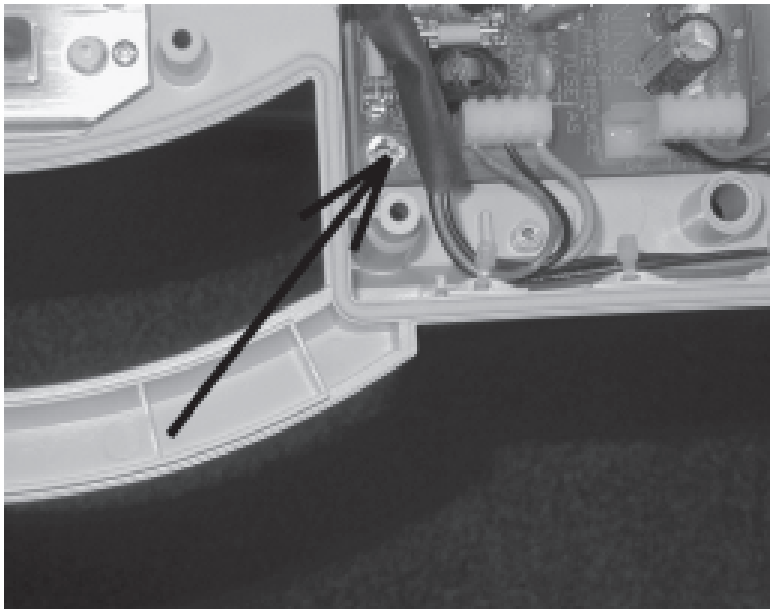

Notes to check this protected earth connection:
- Specification of test circuit:
  - AC current source 50Hz/60Hz of at least 10A up to 25A with limited output voltage of 6V.
- If resistance is greater than 100 mOhm, the unit fails this test.

11.3.1 Leakage Current Measurement

To perform the suggested measurements, the unit under test has to be separated from any interconnection to a system. If the unit is part of a system, extended tests according to IEC 601-1-1 have to be performed. The following diagram shows the
Measuring Circuit [M] required for leakage current. The reading in mV corresponds to µA (leakage current). The Safety Testers generally work with this Measuring Circuit [M] and the displayed values are already converted to leakage current.

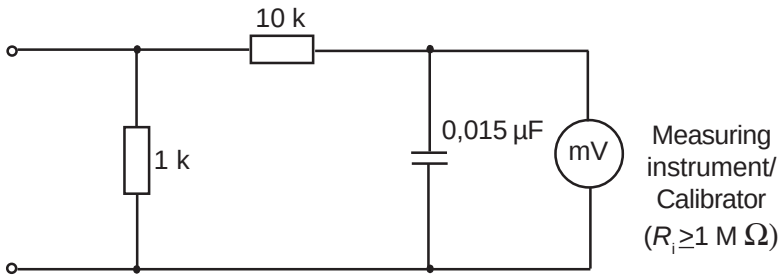

11.3.2 Enclosure Leakage Current Test

This test is performed to measure leakage current from chassis to ground during normal conditions (N.C.) and single fault conditions (S.F.C.).
In all cases, the leakage current is measured from any exposed conductive parts to ground, the unit under test has to be switched on and off.

Connect the unit under test to your Safety Tester.

- During normal conditions (N.C.), referring to the electrical diagram, measurements have to be done under the following conditions:

*	Polarity switch	Norm and RVS
*	GND switch	GND closed
*	S1	closed and open

- During single fault conditions (S.F.C.), referring to the electrical diagram, the measurements have to be done under the following conditions:

* Polarity switch NORM and RVS
* GND switch GND open
* S1 closed

Test has failed if the measured values are greater than:

N.C.	S.F.C
100 µA	500 µA
	300 µA (U.L. requirements)

Electrical Diagram for Enclosure Leakage Current Test

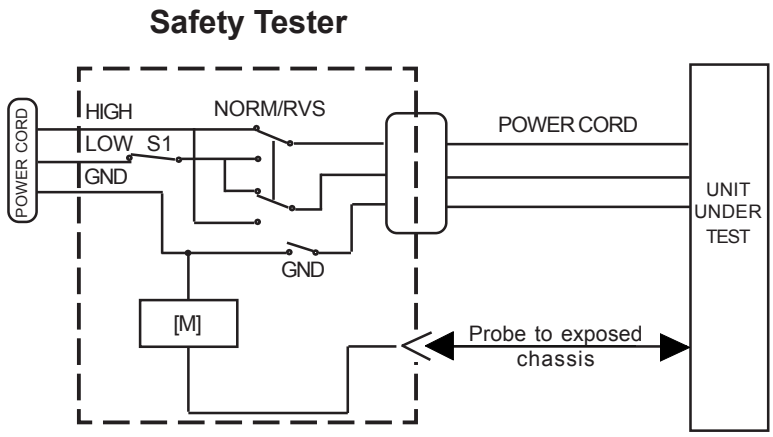

11.3.3 Patient Leakage Current Test

This test performs a leakage current test under single fault conditions (S.F.C.) depending on domestic power outlet with 115 or 230 V AC as source into the floating inputs.

The following signals have a separate floating input and have to be tested separately.

ECG from ECG Input socket
ECG from Paddels
SPO_2

In all cases, the leakage current is measured from input jack of unit under test to ground. The measurement ground point is the left-hand contact on the underside of the CardioServ.

For testing the floating ECG input ,a patient cable, with all leads connected together, is used.

For testing the floating input from Paddles, the test is measured on each Defipaddles.

For testing the floating input from SPO_2 , test plugs are used.

Connect the unit under test to your Safety Tester.

- Referring to the electrical diagram, measurements have to be done under the following conditions:

* Polarity switch NORM and RVS
* GND switch GND closed
* S1 closed

Test has failed if the measured values are greater than **50 µA** at ECG Input and SPO2 Input.

Test has failed if the measured values are greater than **100 µA** at Defipaddles.

Electrical Diagram for Patient Leakage Current Test

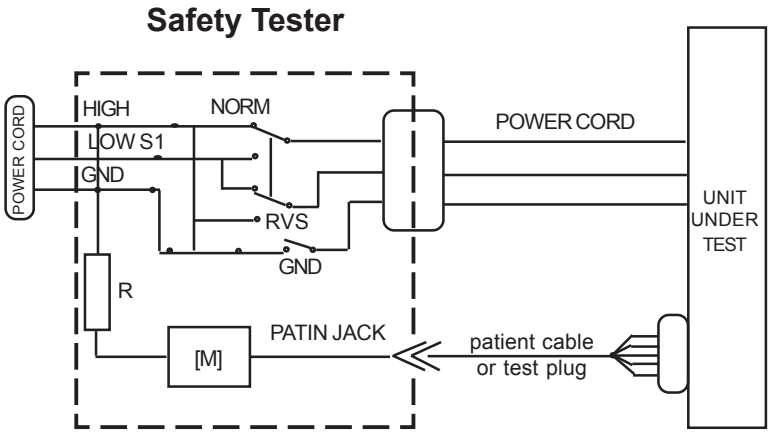

For protection of the test person, the following values of resistor R may be used:

Typ BF	22 kOhm (120 to 130 V)
	47 kOhm (220 to 240 V)
Typ CF	100 kOhm (220 to 240 V)

12. Spare Parts Lists

CardioServVF Version 4.x
CardioServ Version 4.x

Manuals

227 483 02	Service Manual eng CardioServ / CardioServ VF
440 081 80	Assembly Instructions CardioServ Car Mounting System
440 082 27	Installation Instruction CardioServ Wall Mount System

Defib Paddles

217 304 03	Defibrillation Electrode, external, with recorder start, for CardioServ
2030249-001	Electrode Lead f. Defib-El.”internal” without contact insert, for CardioServ
926 074 97	Handle for spoon electrode

Keypad VF

390 001 52	Keypad with Pacemaker ESAOTE/international
390 001 68	Keypad without Pacemaker ESAOTE/international

Keypads manual

390 001 56	Keypad without pacemaker, international
390 001 57	Keypad with pacemaker, international
390 001 58	Keypad without pacemaker, ESAOTE
390 001 59	Keypad with pacemaker, ESAOTE

Recorder

2033230-001	Print Head Service Kit CardioServ
384 015 81	Exchange Recorder preman. f. CardioServ
303 434 78	Transportation roller
918 083 49	Motor 18 V~
480 159 46	Gear 10 mm diameter
480 159 47	Gear 24 mm diameter
480 159 48	Gear 40 mm diameter
388 010 56	Pcb. Motor
432 522 30	Flap. Recorder
430 517 84	Sticker in Flap

Printed circuit boards for Version 4.x

303 445 43	Pcb. analog	(389 004 22)
388 032 53	Pcb. Digital without Pacemaker	(389 004 22)
388 032 06	Pcb. Digital with Pacemaker	(389 004 26)
914 326 45	Energy switch mounted on Pcb Digital	
929 167 17	3V Battery on PCB Digital for keep date and time	

930 117 26	Used up to S/N 101157661, not orderable, Depot repair only
2026753-001	Pcb.SPO2 MP507, NELL2-S board, used from S/N 101157662
303 445 32	Speaker
903 449 88	Capacitor

Housing

303 445 14	Upper shell VF
303 445 22	Upper shell USA VF
430 519 28	Sticker "operation information", English
430 519 29	Sticker "operation information", French
430 519 30	Sticker "operation information", Italian
430 519 31	Sticker "operation information", Spanish
430 519 32	Sticker "operation information", Russian
303 442 85	Upper shell
303 443 61	Upper shell ESAOTE
303 444 46	Upper shell USA
430 517 93	Sticker “operation information”, English
430 517 94	Sticker “operation information”, French
430 518 09	Sticker “operation information”, Italian
430 517 10	Sticker “operation information”, Spanish
430 517 11	Sticker “operation information”, Russian
2015564-001	Sticker "operation information", Chinese (simplified)
2035332-001	Sticker "operation information", Czech
2035552-001	Sticker "operation information", Portuguese
2036610-001	Sticker "operation information", German
2036665-001	Sticker "operation information", Turkish
2037297-001	Sticker "operation information", Lithuanian
2039102-001	Sticker "operation information", Polish
2036705-001	Sticker "operation information", Korean
2038411-001	Sticker "operation information", Romanian

2034056-020	Sticker China RoHS
2002451-001	Lower shell
430 518 05	Sticker “Attention, high Voltage....”, German
430 518 06	Sticker “Attention, high Voltage....”, English
430 518 07	Sticker “Attention, high Voltage....”, French
430 518 12	Sticker “Attention, high Voltage....”, Italian
430 518 13	Sticker “Attention, high Voltage...”, Spanish
430 518 14	Sticker “Attention, high Voltage...”, Russian
2028019-001	Sticker "Attention, high Voltage...", Chinese (simplified)

2035333-001	Sticker "Attention, high Voltage...", Czech
2035553-001	Sticker "Attention, high Voltage...", Portuguese
2036666-001	Sticker "Attention, high Voltage...", Turkish
2036706-001	Sticker "Attention, high Voltage...", Korean
2037298-001	Sticker "Attention, high Voltage...", Lithuanian
2039103-001	Sticker "Attention, high Voltage...", Polish
2038412-001	Sticker "Attention, high Voltage...", Romanian
504 657 54	Contact ———> Station
504 657 28	Contact for Paddles
432 522 27	latch
432 522 35	Filler Plug
924 017 22	Foot
482 035 19	Knob for Energiy Selector
482 035 21	Knob for Energiy Selector (Esaote)
923 096 69	Mounting Base
829 074 11	Scotch mount, white

In-/Output connector

303 445 38	ECG Inputconnector completely wired for CardioServ version 4.x
2006698-001	Distance Case
303 445 39	SPO2 Input connector completely wired for CardioServ, used up to S/N101157661
2026751-001	SPO2 Input connector completely wired for CardioServ, valid from S/N101157662 and higher
303 445 17	Inputconnector option Dongel
303 444 16	Electrode coupling for paddles (**Used for CardioServ Version 3.x and 4.x**)
915 417 95	Mains plug 3 wire
303 444 22	Charge Socket for 12 V (option)
841 202 28	Screw
803 083 02	Nut
804 177 06	Washer

Wire Sets

38327322	Pace maker cable
38327339	Power supply cable
38327294	12 Volt cable from analog board to digital board + Batterie cable

Power Supply

930 118 46	Switching power supplies
908 122 28	Fuse block
912 084 25	Fuse T 6,25A
303 440 30	Battery Pack 12 V / 1,2 AH

LCD Display

~~930 117 17~~	~~LCD Display~~ (is obsolete)
2007355-001	new LCD Display replace the old Display 930 117 17

Ambulance Holder for CardioServ

504 658 18	Case
504 658 21	Insulating Device
416 118 28	Contact Spring
504 658 23	Recording upper
427 338 70	Bolt
504 658 22	Recording lower
504 658 20	Handle / Test
402 236 14	Socket
914 326 43	Pushbutton switch
427 338 69	ROD
388 011 38	Pcb. 12 V- option

13. Accessories: Car holder

CardioServ Car-Holder 202 307 01

The car-holder secures the CardioServ during ambulance transport. In this holder the CardioServ is supplied with power from the 12-volt ambulance power supply system.

CardioServ Wall Holder 202 307 02

The wall holder secures the CardioServ when not in use. It is identical to the car-holder, except that it does not have any electronics to charge the battery or supply power to the device.

CardioServ Charging Unit 205 106 01

The charging unit serves to supply power in the CardioServ during vehicle transport. The CardioServ is supplied with power from the 12-volt vehicle power supply system. Using this charging unit requires equipping the CardioServ with the charging socket 303 444 22.

Installation Instructions for the CardioServ Mounting System 202 307 01

* First of all, connect the mounting system to the 12-V power supply system of the ambulance (cable aperture on the underside of the mounting system, see terminal diagram).

* Connect the positive terminal (+12 V) to the free contact of the fuse holder (4.8-mm sleeve enclosed).
  Connect earth (0 V) to the corresponding contact of the terminal block (4.8-mm sleeve enclosed).
  Please use the enclosed adhesive fastening base and the cable tie to fix the connection cables.

  Observe the following points when connecting the mounting system:
  - the negative terminal of the ambulance power supply must be connected to earth,
  - the positive lead must be protected with a 10 Amp fuse (slow blow) and
  - the lead diameter must be adequate.

* The mounting system has 4 bore holes both at the top and bottom edges, allowing it to be mounted to the ambulance in a vertical or horizontal position (take care that the mounting system is flush against the wall of ambulance; in the vertical position the wider part with the cable aperture must face down!) (see Fig. 1).

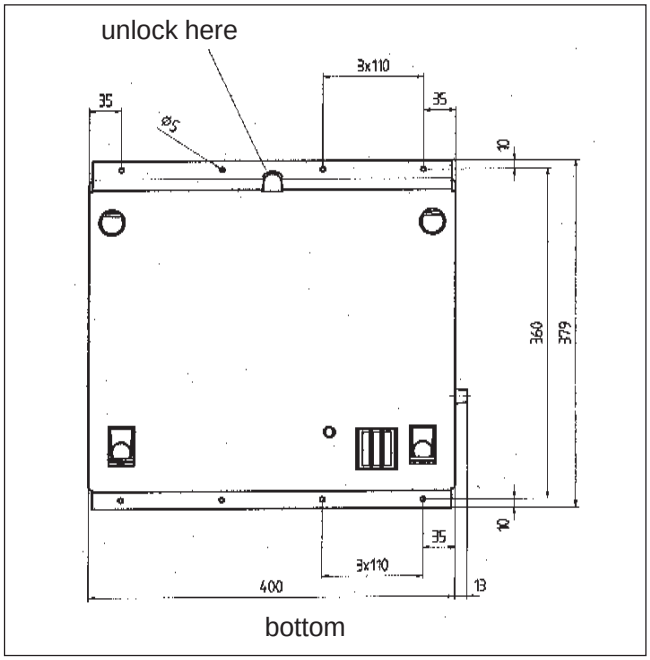

Figure 1

* Replace the 4 rubber feet of **CardioServ** with the metal feet enclosed. When screwing down the metal feet, please note that they have a recess on one side for the screw head.

* Use the appropriate type of screws for attachment of the metal feet: If the CardioServ unit is equipped with metal bushings, please use the fillister head screws DIN 912 M 4 x 12; if there is no metal bushing but only a hole, please use Plastite screws 4 x 16.

* Please be sure to use the red feet (angular groove) at the bottom, i.e., on the side with the contacts. (See Fig. 2).

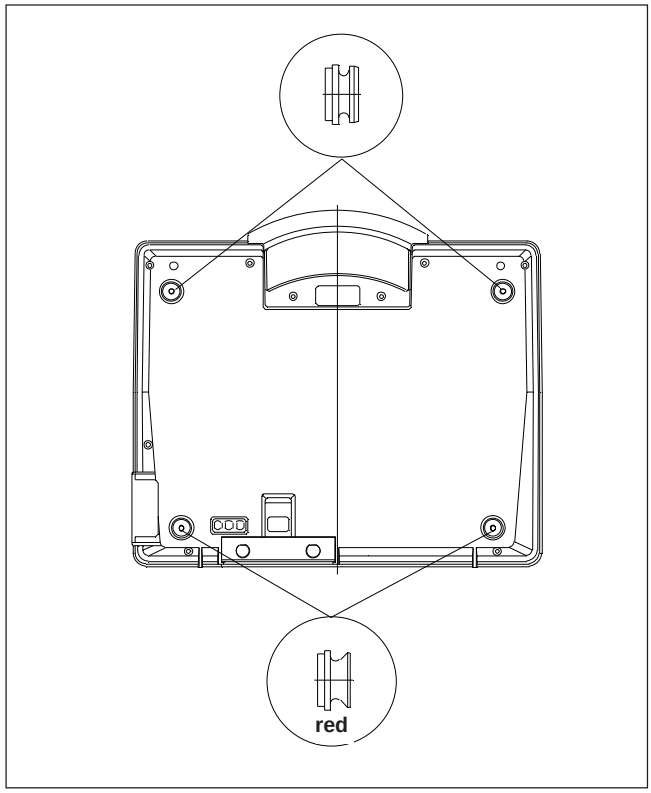

Figure 2

* If required, you may attach the enclosed rubber feet on top of the metal feet.

* Mount the **CardioServ** by first inserting the feet at the bottom, then by introducing the feet at the top.

* To remove the device press on the latches (top center).

Appendix: Drawings

For your notes

©2009 General Electric Company. All rights reserved.
Schutzvermerk nach DIN 34 beachten

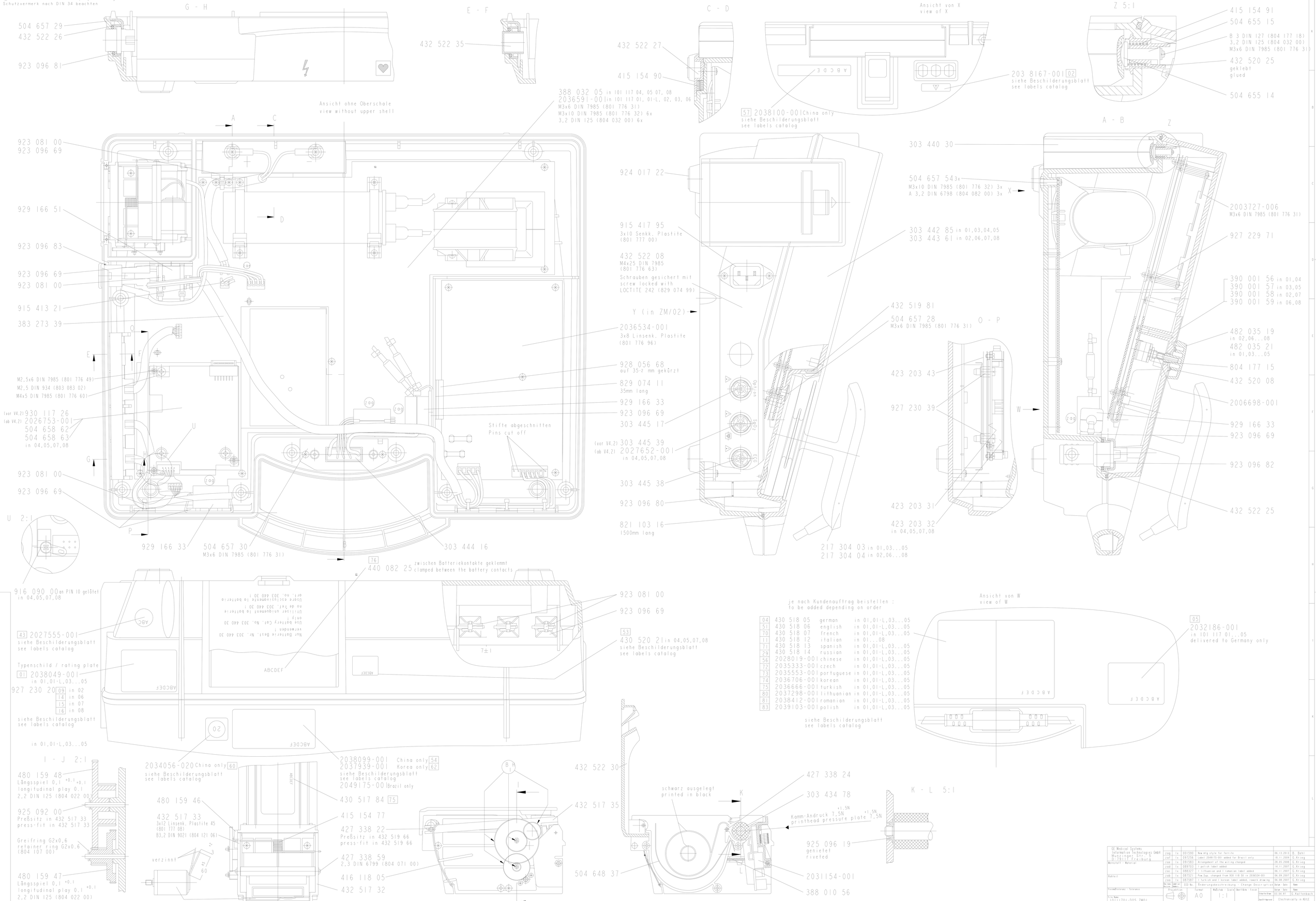

GE Medical Systems Information Technologies GmbH D-91084 Erlangen Werkstatt - Material	zag	1x	001590	New mtg style for ferrite	04.13.2013	D. Dehl
	zaf	1x	097256	Lemo: 2049175-001 added for Brazil only	18.11.2009	G.Krieg
	zae	1x	091583	Arrangement of the wiring changed	28.05.2008	G.Krieg
	zad	1x	089303	+ polish label added	14.11.2007	G.Krieg
	zac	1x	088327	+ lithuanian and + romanian label added	06.11.2007	G.Krieg
Gehäuse	zab	1x	087521	Pre.Sup. changed from 930 118 50 to 2036534-001	04.09.2007	G.Krieg
	zaa	1x	087587	+ turkish and + korean label added, revert drawing	04.08.2007	G.Krieg
	Ma-Index	Änderungsnummer Modification Number	ECO No.	Änderungsbeschreibung - Change Description	Datum - Date	Name
Fremdfertigmaß - Tolerance	Projektion		Format	Maßstab - Scale	Oberfläche - Finish	Datum - Date / Name
File Name 101117001-005_ZM001			A0	1:1		Gezeichnet-Drawn 22.04.97 / G. Kaltenbach
						Geprüft-Approved Electronically in AGILE
Dokument Beschreibung - Document Description doc mech dwg ZM01	Zeichn.Art/Blatt Nr. Sel-Beschreibung - Part Description ZM/01 Defibrillator CardioServ					Teil Nr. - Part Number 101 117 01...32
Dokument Nr. - Document No. 101117001-005						

© 2007 General Electric Company. All rights reserved.
Schutzvermerk nach DIN 34 beachten

927 230 40
M3x16 DIN 7985 (801 776 64)

1) 2x 923 081 00
2x 923 096 69
(q)

433 672 24
927 229 71
M3x16 DIN 7985 (801 776 64)

77 2033234-001
geklebt / glued

829 074 09
50mm lang

303 445 32
432 524 29
Plastite 45 3x10 (801 777 09)

Ansicht von Y in Oberschale
view of upper shell from Y

In diesem Bereich Leitungen zwischen Abschirmplatte und Nomex Papier gelegt
In this area the cables are laying between the sheeld plate and the Nomex paper

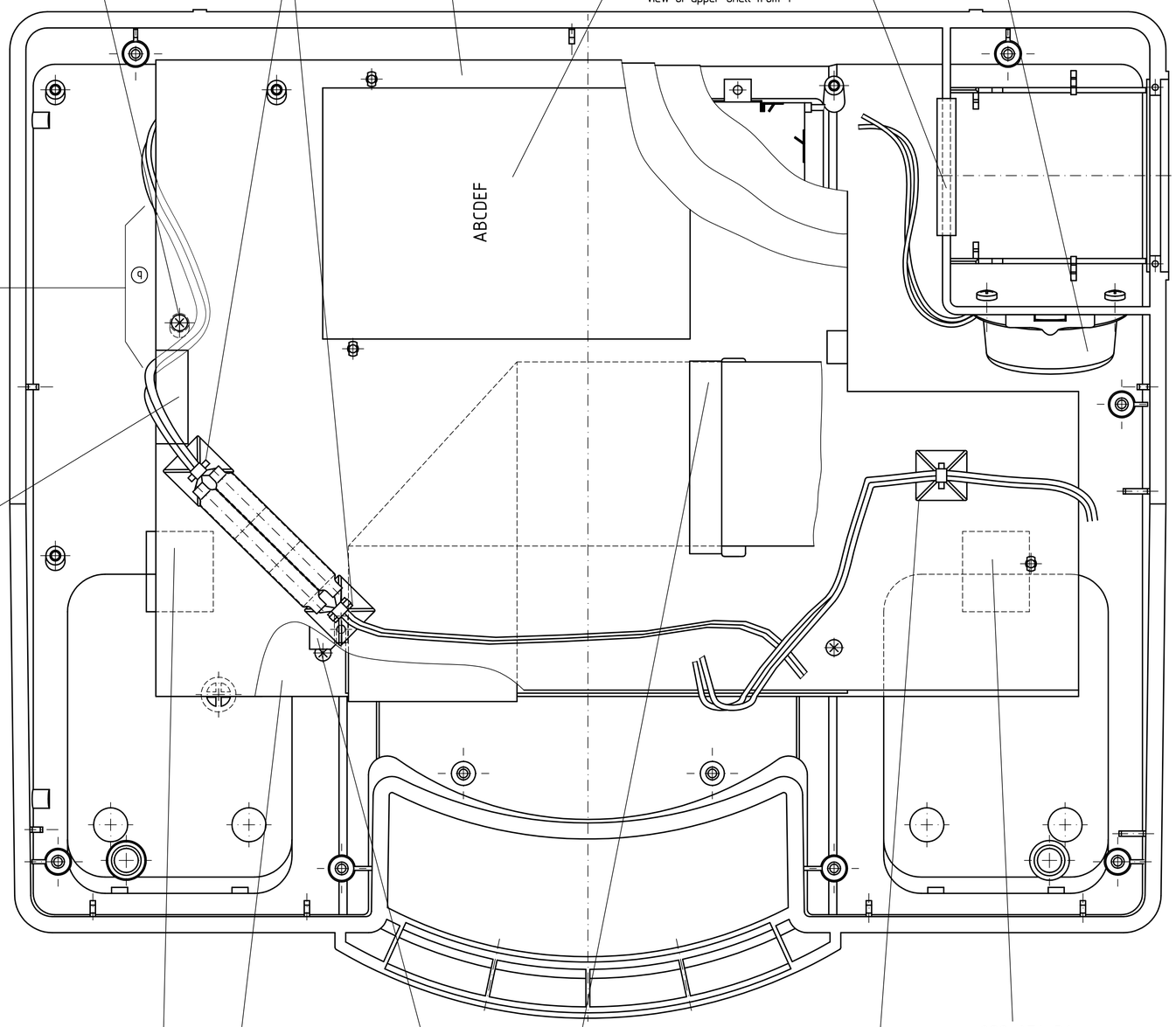

(q)
829 074 36
35mm lang

829 074 36
50mm lang

2) 388 032 06
388 032 53
M3x6 DIN 7985 (801 776 31)
2/A 3,2 DIN 6798 (804 082 00)

423 203 42

829 074 36
73mm lang

923 081 00
923 096 69

829 074 36
50mm lang

Firmenlogo je nach Oberschale
Company logo it depends upper shell

3) siehe Tabelle unten und Beschilderungsblatt
see table below and labels catalog

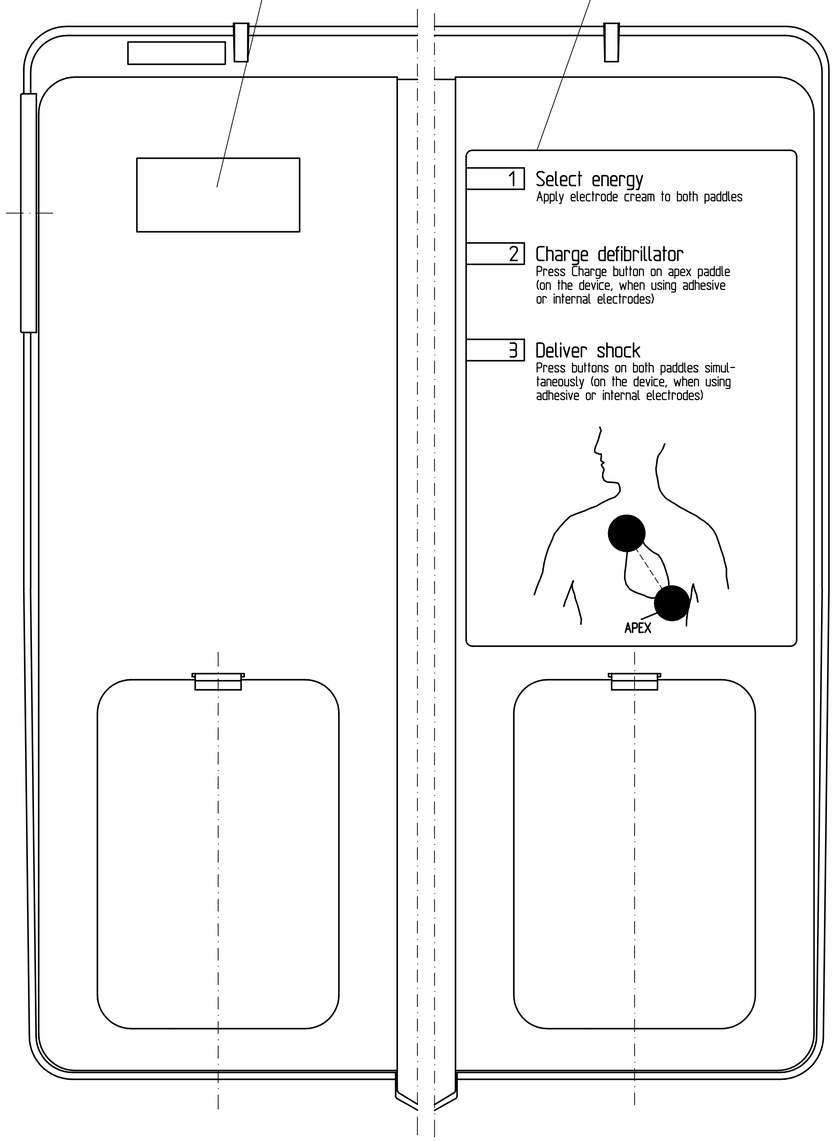

1)	383 273 22	nur in / only in 03, 05, 06, 08
2)	388 032 06	nur in / only in 03, 05, 06, 08
	388 032 53	nur in / only in 01, 01-L, 02, 04, 07

3)

67	2036610-001	german	in 01, 01-L, 03...05
62	430 517 93	english	in 01, 01-L, 03...05
63	430 517 94	french	in 01, 01-L, 03...05
10	430 518 09	italian	in 01...08
64	430 518 10	spanish	in 01, 01-L, 03...05
28	430 518 11	russian	in 01, 01-L, 03...05
55	2015564-001	chinese	in 01, 01-L, 03...05
65	2035332-001	czech	in 01, 01-L, 03...05
66	2035552-001	portuguese	in 01, 01-L, 03...05
68	2036705-001	korean	in 01, 01-L, 03...05
69	2036665-001	turkish	in 01, 01-L, 03...05
78	2037297-001	lithuanian	in 01, 01-L, 03...05
79	2038411-001	romanian	in 01, 01-L, 03...05
82	2039102-001	polish	in 01, 01-L, 03...05

siehe Beschilderungsblatt
see labels catalog

1) Hierzu Drahtsatz : 383 273 22
Wire set :

GE Medical Systems
Information Technologies GmbH
Munzinger Str. 3
D-79111 Freiburg

Werkstoff - Material

Rohteil

Freimaßtoleranz - Tolerance

File Name: 10111701-D06_ZM02

Dokument Bezeichnung - Document Description: doc mech dwg ZM02

Dokument Nr. - Document No.: 10111701-D06

Änd.Index Revision	Blatt Sheet	ECO No.	Änderungsbeschreibung - Change Description	Datum - Date	Name
s	---	089703	polish label added	14.11.2007	G.Krieg
r	---	088327	lithuanian and romanian label added	06.11.2007	G.Krieg
q	3x	087521	changing the arrangement of the wiring	06.09.2007	G.Krieg
p	---	087587	turkisch and korean label added, reworked drawing	06.08.2007	G.Krieg

Projektion | Format: A1 | Maßstab - Scale: 1:1 | Oberfläche - Finish

Entworfen-Drawn: 02.04.97 G.Kaltenbach
Geprüft-Approved: Electronically in AGILE

Zeichn.Art/Blatt Nr.: ZM/02

Teil Bezeichnung - Part Description: Defibrillator CardioServ

Teil Nr. - Part Number: 101 117 01...32

© 2007 General Electric Company. All rights reserved.
Schutzvermerk nach DIN 34 beachten

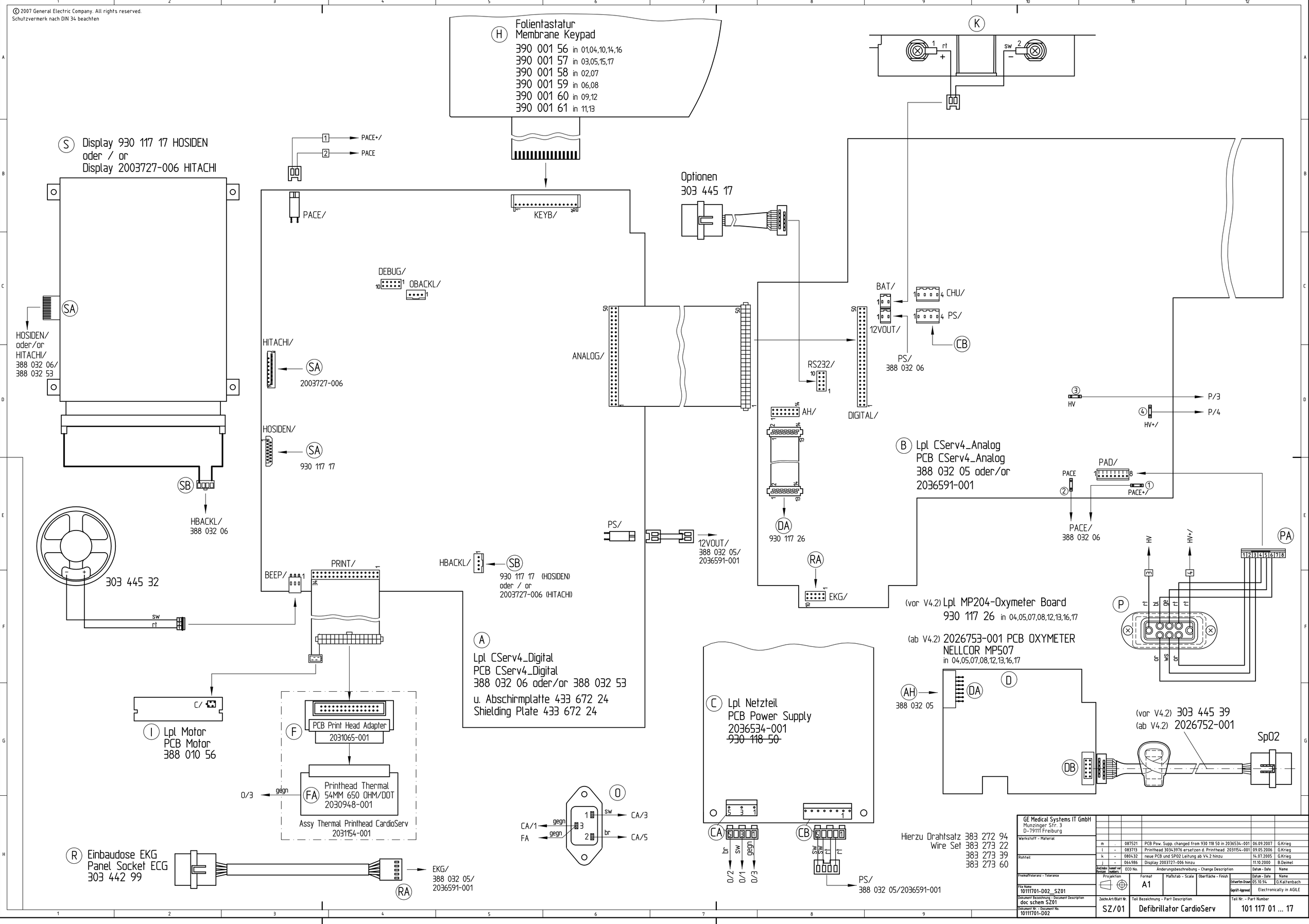

m		087521	PCB Pow. Supp. changed from 930 118 50 in 2036534-001	06.09.2007	G.Krieg
l	-	083713	Printhead 30343976 ersetzen d. Printhead 2031154-001	09.05.2006	G.Krieg
k	-	080432	neue PCB und SPO2 Leitung ab V4.2 hinzu	14.07.2005	G.Krieg
j	-	064986	Display 2003727-006 hinzu	11.10.2000	B.Deimel
Änd.Index Revision	Änderungsnummer number	ECO No.	Änderungsbeschreibung - Change Description	Datum - Date	Name

GE Medical Systems IT GmbH
Munzinger Str. 3
D-79111 Freiburg

Werkstoff - Material
Rohteil
Freimaßtoleranz - Tolerance
Projektion
Format: A1
Maßstab - Scale
Oberfläche - Finish
Datum - Date | Name
Entworfen-Drawn: 05.10.94 G.Kaltenbach
Geprüft-Approved: Electronically in AGILE

File Name: 10111701-D02__SZ01
Dokument Bezeichnung - Document Description: doc schem SZ01
Dokument Nr. - Document No.: 10111701-D02
Zeichn.Art/Blatt Nr.: SZ/01
Teil Bezeichnung - Part Description: Defibrillator CardioServ
Teil Nr. - Part Number: 101 117 01 ... 17

Diese Tabelle definiert die gültigen Konfigurationen des CardioServ Version 4.2.1
This table defines the valid configurations of the CardioServ Version 4.2.1

Komponente Component			Sach-Nr. Part No.	Index (Prod.)	kompatibel(Service) Compatible(Service)	in Variante in Device Variation	SW-Release
Digital	Lpl. Digital Ersatzteil-Nr. Austausch Nr.	PCB Digital Spare Part No. Replacement No.	388 032 06 2004602-001 2004601-001	S	B7,I,J,J1,L,L1,L2, M,N,O, P, Q, R	03,05,06,08	V4.13
	Lpl. Digital Ersatzteil-Nr. Austausch Nr.	PCB Digital Spare Part No. Replacement No.	388 032 53 2004604-001 2004603-001	P	B4,F,G,G1,I,I1,I2, J,K,L, M, N, O	01,01-L,02,04,07	V4.13
Analog	Lpl. Analog Ersatzteil-Nr. Austausch Nr.	PCB Analog Spare Part No. Replacement No.	388 032 05 - -	K	D1,D2,D3,D4,G,H, H1, I, J	04, 05, 07, 08	
	Lpl. Analog	PCB Analog	2036591-001	C	A, B	01, 01-L, 02, 03, 06	
SpO2	PCB - MP204 Index C is equivalent: MP204 P Revision A...A/7 (see label CPU) Index D is equivalent: MP204 P Revision 048685-D (see label CPU) Used together with PCB Digital 38803206 Index B7,I,J,J1,L,L1,L2,M,N,O Used together with PCB Digital 38803253 Index B4,F,G,G1,I,I1,I2,J,K,L Used together with EINBAUDOSE SPO2 30344539		930 117 26	D	B, C	04,05,07,08	-
	PCB - OXYMETER COVIDIEN Used together with PCB Digital 38803206 effective from Index P Used together with PCB Digital 38803253 effective from Index M Used together with CONN RCPT CSERV SPO2 MP507 2026752-001		2026753-001	E	A, B, C, D	04,05,07,08	-
Netzteil		Skynet SNP-9108-MH	930 118 50	A		01, 01-L, 02-08	
		INPOTRON PSU-0061-02B	2036534-001	C,D	930 118 50, A, B, C	01, 01-L, 02-08	
Defi-Elektroden-paar		Defi Paddles (2)	217 304 03	S	D,E,F,G,H,I,J,K,L,M,N,O,P,Q,R	01, 01-L, 03-05	
Defi-Elektroden-paar		Defi Paddles (2)	217 304 04	R	E,F,G,H,I,J,K,L,M,N,O,P	02,06...08	
Display	LCD Modul		930 117 17		verwendet/used in 388 032 06	B7 ... J1	01,01-L,02-08
					verwendet/used in 388 032 53	B4 ... G1	01,01-L,02-08
	LCD Modul		2003727-006		verwendet/used in 388 032 06	L ... O	01,01-L,02-08
					verwendet/used in 388 032 53	I ... L	01,01-L,02-08

GE Medical Systems
Information Technologies GmbH
Munzinger Straße 5
79111 Freiburg, GERMANY

Änd.Index Revision	kommt vor numbers	ECO No.	Änderungsbeschreibung - Change Description	Datum - Date	Name
zap	--	108421	SPO2 PCB-Oxymeter Covidien: Revision changed	27-Sep-12	P. Fischer
zan	--	106215	Netzteil: Revision changed	07-May-12	P. Fischer
zam	--	101866	Netzteil: Revision changed	14-Jan-11	P. Fischer
zal	--	101359	Defi Paddles: Revision changed	18-Nov-10	P. Fischer
zak	--	095995	Defi Paddles: Revision changed	08.06.09	P. Fischer

	Projektion	Format	Maßstab - Scale	Oberfläche - Finish		Datum - Date	Name
File Name 10111701-D03_SZ03		A4			Entworfen-Drawn	12.07.95	G.Kaltenbach
					Geprüft-Approved	Electronically in Agile	

Dokument Bezeichnung - Document Description	Zeichn.Art/Blatt Nr.	Teil Bezeichnung - Part Description	Teil Nr. - Part Number
doc schem SZ03 MRI	SZ/03	CardioServ	101 117 01 ... 08
Dokument Nr. - Document No. 10111701-D03			

© 2004-2012 General Electric Company. All rights reserved.
Schutzvermerk nach DIN 34 beachten

Diese Tabelle definiert die gültigen Konfigurationen des CardioServ Version 4.2
This table defines the valid configurations of the CardioServ Version 4.2

Komponente Component			Sach-Nr. Part No.	Index (Prod.)	kompatibel(Service) Compatible(Service)	in Variante in Device Variation	SW-Release
Digital	Lpl. Digital Ersatzteil-Nr. Austausch Nr.	PCB Digital Spare Part No. Replacement No.	388 032 06 2004602-001 2004601-001	R	B7,I,J,J1,L,L1,L2, M,N,O, P, Q	03,05,06,08,11,13, 15,17	V4.13
	Lpl. Digital Ersatzteil-Nr. Austausch Nr.	PCB Digital Spare Part No. Replacement No.	388 032 53 2004604-001 2004603-001	O	B4,F,G,G1,I,I1,I2, J,K,L, M, N	01,02,04,07,09,10,12, 14,16	V4.13
Analog	Lpl. Analog Ersatzteil-Nr. Austausch Nr.	PCB Analog Spare Part No. Replacement No.	388 032 05 - -	I	D1,D2,D3,D4,G,H, H1	01...17	
SpO2	PCB - MP204		930 117 26	D	B, C	04,05,07,08,12,13,16,17	-
	Index C is equivalent: MP204 P Revision A...A/7 (see label CPU) Index D is equivalent: MP204 P Revision 048685-D (see label CPU) Used together with PCB Digital 38803206 Index B7,I,J,J1,L,L1,L2,M,N,O Used together with PCB Digital 38803253 Index B4,F,G,G1,I,I1,I2,J,K,L Used together with EINBAUDOSE SPO2 30344539						
	PCB - OXYMETER NELLCOR 2026753-001			B	A	04,05,07,08,12,13,16,17	-
	Used together with PCB Digital 38803206 effective from Index P Used together with PCB Digital 38803253 effective from Index M Used together with CONN RCPT CSERV SPO2 MP507 2027652-001						
	Netzteil Remarks: Index A:	 Skynet Netzteil SNP-9108-MH	930 118 50	A		01...17	
	Defi-Elektroden-paar	Defi Paddles (2)	217 304 03	Q	D,E,F,G,H,I,J,K,L,M,N,O,P	01,03...05,10...17	
	Defi-Elektroden-paar	Defi Paddles (2)	217 304 04	R	E,F,G,H,I,J,K,L,M,N,O,P	02,06...08	
Display	LCD Modul		930 117 17	verwendet/used in 388 032 06 verwendet/used in 388 032 53	B7 ... J1 B4 ... G1	01...17 01...17	
	LCD Modul		2003727-006	verwendet/used in 388 032 06 verwendet/used in 388 032 53	L ... O I ... L	01...17 01...17	

GE Medical Systems IT GmbH
Munzinger Str. 3
D-79111 Freiburg

Werkstoff - Material

Rohteil

Änd.Index Revision	kommt vor numbers	ECO No.	Änderungsbeschreibung - Change Description	Datum - Date	Name
zae	--	083713	PCB revision numbers updated	16.08.06	P. Fischer
zad	--	084160	Index/Compatible of both Lpl. Digital updated	23.05.06	P. Fischer
zac	--	080432	SPO2 section total reworked, V4.1 updated to V4.2	07.07.05	P. Fischer
zab	--	077851	38803206 Index N auf O, 38803253 J auf K, 38803205 H1 auf I	01.09.04	P. Fischer
zaa	--	076988	38803206 von Index M auf N. 38803253 von J auf K	07.05.04	P. Fischer
z	--	075702	217 304 04 Index von Q auf R	20.02.04	P. Fischer
y	--	071347	217 304 03/04 Index von P auf Q	30.09.2002	B.Deimel
x	---	067417	217 304 03/04 Index von O auf P	26.09.2001	B.Deimel

Freimaßtoleranz - Tolerance

Projektion

Format: A4

Maßstab - Scale

Oberfläche - Finish

	Datum - Date	Name
Entworfen-Drawn	12.07.95	G.Kaltenbach
Geprüft-Approved	12.07.95	W.Mikloss
Geprüft-Approved		

File Name: 10111701-D03_SZ03

Dokument Bezeichnung - Document Description: doc schem SZ03 MRI

Dokument Nr. - Document No.: 10111701-D03

Zeichn.Art/Blatt Nr.: SZ/03

Teil Bezeichnung - Part Description: CardioServ

Teil Nr. - Part Number: 101 117 01... 17

Copyright GE Medical Systems IT
Schutzvermerk nach DIN 34 beachten

Diese Tabelle definiert die gültigen Konfigurationen des CardioServ Version 4.1
This table defines the valid configurations of the CardioServ Version 4.1

Komponente Component			Sach-Nr. Part No.	Index (Prod.)	kompatibel(Service) Compatible(Service)	in Variante in Device Variation	SW-Release
Digital	Lpl. Digital	PCB Digital	388 032 06	O	B7,I,J,K,L	22,24,26,28,30,32	V4.11
	Ersatzteil-Nr.	Spare Part No.	2004602-001				
	Austausch Nr.	Replacement No.	2004601-001				
Digital	Lpl. Digital	PCB Digital	388 032 53	L	B4,F,G,H,I	21,23,25,27,29,31	V4.11
	Ersatzteil-Nr.	Spare Part No.	2004604-001				
	Austausch Nr.	Replacement No.	2004603-001				
Analog	Lpl. Analog	PCB Analog	388 032 05	I	D1,D2,D3,D4,G,H	21...32	
	Ersatzteil-Nr.	Spare Part No.	-				
	Austausch Nr.	Replacement No.	-				
	Lpl - MP 204	PCB - MP 204	930 117 26	C	B	23,24,27,28,31,32	
	Ersatzteil-Nr.	Spare Part No.	-				
	Austausch Nr.	Replacement No.	-				
	Index C entspricht : MP 204 P Revision		A...A/7				
	(siehe Label CPU)						
	Netzteil		930 118 50	A		21...32	
	Remarks:						
	Index A:	Skynet Netzteil SNP-9108-MH					
Display	LCD Modul		930 117 17	verwendet/used in 388 032 06	B7...K	01...17	
				verwendet/used in 388 032 53	B4...H	01...17	
	LCD Modul		2003727-006	verwendet/used in 388 032 06	L	01...17	
				verwendet/used in 388 032 53	I	01...17	

Bemerkung: Der Index Prod. für Lpl. Digital hätte mit ECO064202 auf K und H gesetzt werden müssen

GE Medical Systems IT GmbH
Munzinger Str. 3
D-79111 Freiburg

Änd.Index Revision	kommt vor numbers	ECO No.	Änderungsbeschreibung - Change Description	Datum - Date	Name
r	-	077851	Digital/Analog: Index geändert	24.11.04	P. Fischer
q	---	064986	Digital Index auf L und I; Ers.Nrn, Display und Bem. hinzu	26.07.2000	B.Deimel
p	-	060932	neues Netzteil 930 118 50	27.11.98	G.Kaltenb.
o	-	060246	neuer Index Lpl Analog 388 032 05	08.09.98	G.Kaltenb.
n	-	060335	neuer Index Lpl Digital 388 032 06	04.06.98	G.Kaltenb.
m	-	060305	neuer Index Lpl Analog 388 032 05	18.05.98	G.Kaltenb.
l	-	203238	Revision A/6 u. A/7 für 930 117 26	21.01.98	G.Kaltenb.
k	-	203211	388 032 06 neuer Index	20.01.98	G.Kaltenb.

Werkstoff - Material

Rohteil

Freimaßtoleranz - Tolerance

File Name: 10111721-D03_SZ02

Dokument Bezeichnung - Document Description: doc schem SZ02 MRI

Dokument Nr. - Document No.: 10111721-D03

Projektion

Format: A4

Maßstab - Scale

Oberfläche - Finish

	Datum - Date	Name
Entworfen-Drawn	13.12.96	G.Kaltenbach
Geprüft-Approved	13.12.96	W.Mikloss
Geprüft-Approved		

Zeichn.Art/Blatt Nr.: SZ/02

Teil Bezeichnung - Part Description: CardioServ

Teil Nr. - Part Number: 101 117 21... 32

Copyright GE Medical Systems IT
Schutzvermerk nach DIN 34 beachten

Copyright GE Medical Systems IT, Schutzvermerk nach DIN 34 beachten

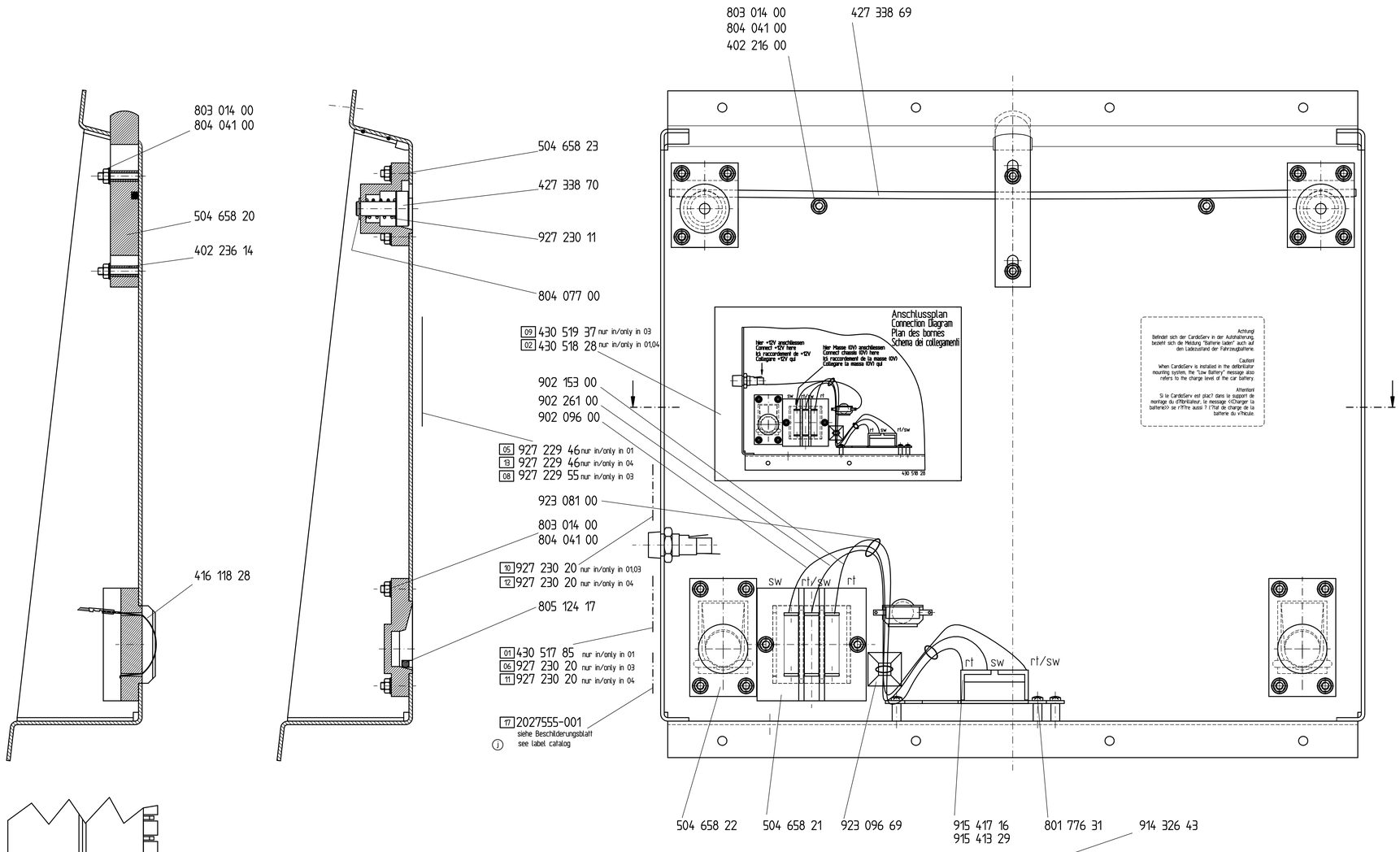

Beachte hierzu auch Schaltplanzeichnung 202 307 01 S !

lose beigelegt wird:
Puffer d=12x1,5 dick 924 017 14 - 6 Stück
Zylinderschraube M4x12 DIN912 B9 4 Stück
Fuß ---------- 504 658 19 - 2 Stück
unterer Fuß ------ 504 658 56 - 2 Stück
6 Kt Stiftschlüssel -- 832 001 00 - 1 Stück

Steckerhülse 4,8x0,5 915 420 28 - 2 Stück
Isolierhülse --------- 915 394 00 - 2 Stück
Kabelband ---------- 923 081 00 - 1 Stück
Befestigungssockel -- 923 017 13 - 1 Stück
Montageanleitung --- 440 081 80 - 1 Stück,nur in 01
Montageanleitung --- 440 082 92 - 1 Stück,nur in 03
Montageanleitung --- 440 083 23 - 1 Stück,nur in 04
Plastiteschraube 4x16 801 777 48 - 4 Stück
Schraubkappe --- 908 122 32 - 1 Stück

alle Teile in Polybeutel
931 098 31 verpackt

GE Medical Systems IT GmbH
Munzinger Str. 3
D-79111 Freiburg

Werkstoff - Material

Rohteil

Index	Änderungsnr. Revision number	ECO No.	Änderungsbeschreibung - Change Description	Datum - Date	Name
j	1x	081244	Label TT (WEEE) added	06.07.2005	G.Krieg
i	---	203063	neues Original	05.08.97	G.Kaltenbach

Allgemeiner Toleranz: ISO2768 - mK
Oberfläche - Finish:
Projektion: Format A0 | Maßstab - Scale 1:1 | Oberfläche - Finish ---
Gezeichnet - Drawn 13.04.95 A.Wendler
Geprüft - Approved 13.04.95 A.Wendler
Dateiname: 202307 01-D03_ZM01
Gesamtel Bezeichnung - Standard Description: doc mech dwg ZM01
Gesamtel Nr. - Standard No.: 202307 01-D03
Zeichn.Art/Blatt Nr.: ZM/01
Teil Bezeichnung - Part Description: Autohalterung für Cardioserv
Teil Nr. - Part Number: 202 307 01,03,04

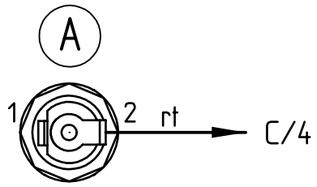

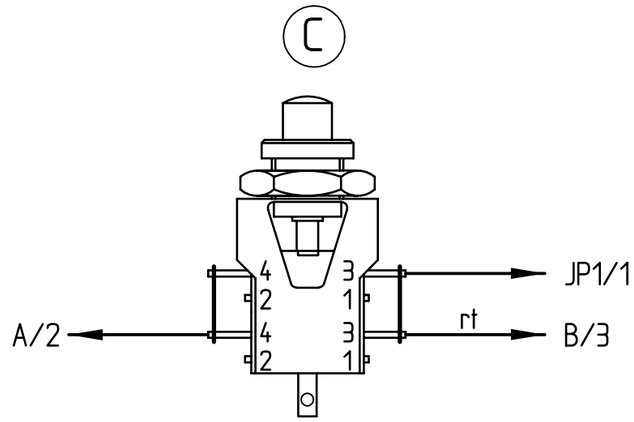

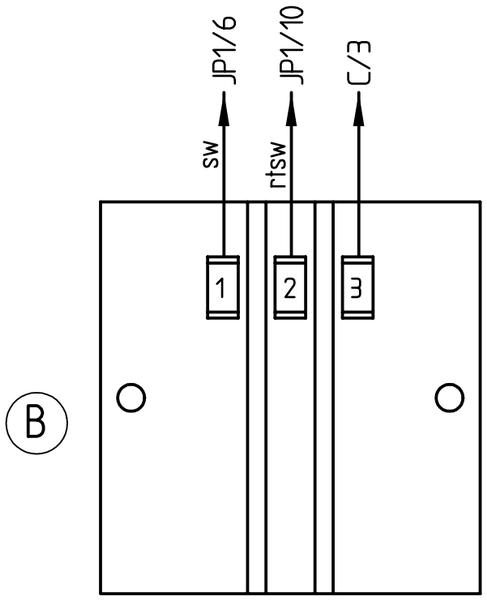

Lpl 12V - Option
PCB 12V - Option
388 011 38

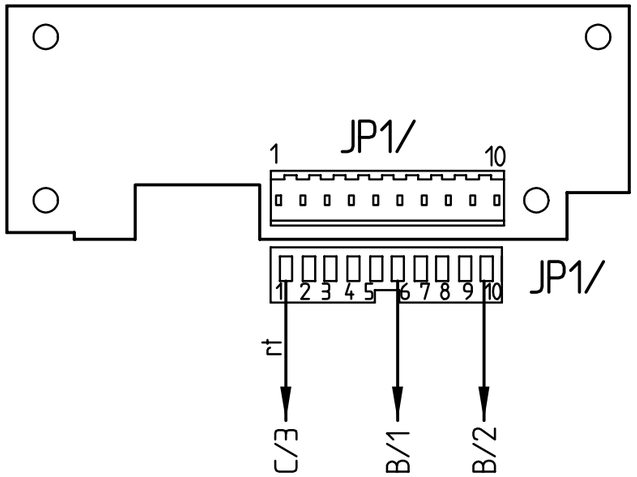

Copyright GE Medical Systems IT
Schutzvermerk nach DIN 34 beachten

GE Medical Systems IT GmbH
Munzinger Str. 3
D-79111 Freiburg

Werkstoff - Material

Rohteil

Freimaßtoleranz - Tolerance

File Name
20230701-D02

Dokument Bezeichnung - Document Description
doc schem SZ01

Dokument Nr. - Document No.
20230701-D02__SZ01

Änd.Index Revision	kommt vor numbers	ECO No.	Änderungsbeschreibung - Change Description	Datum - Date	Name
a	--	073057	Data clean-up	04.06.2003	B.Deimel

Projektion	Format	Maßstab - Scale	Oberfläche - Finish		Datum - Date	Name
	A3	1:1		Entworfen-Drawn	26.04.95	G.Kaltenbach
				Geprüft-Approved	26.04.95	W.Mikloss
				Geprüft-Approved		

Zeichn.Art/Blatt Nr.: SZ/01

Teil Bezeichnung - Part Description: Autohalterung für CardioServ

Teil Nr. - Part Number: 202 307 01

Schutzvermerk nach DIN 34 beachten

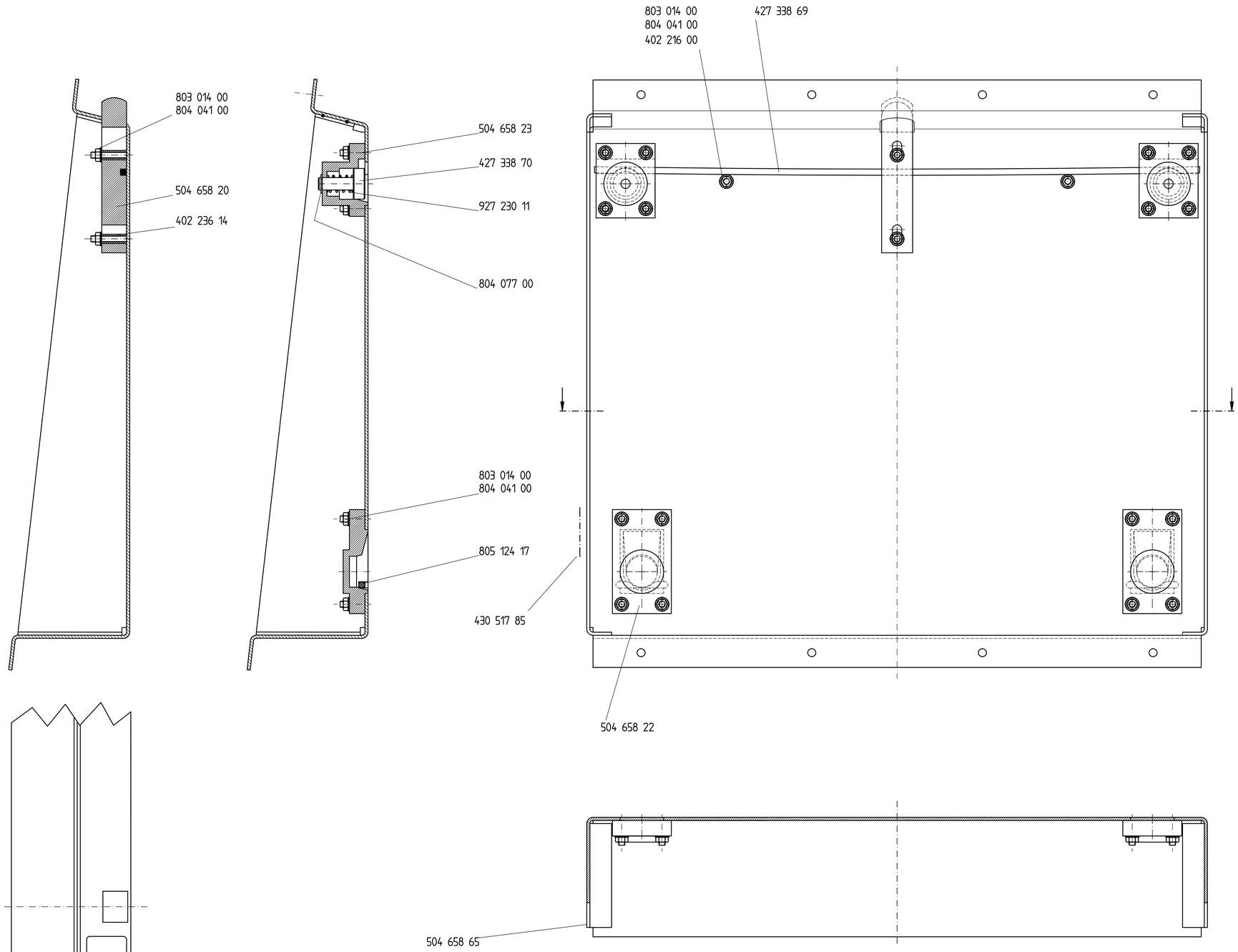

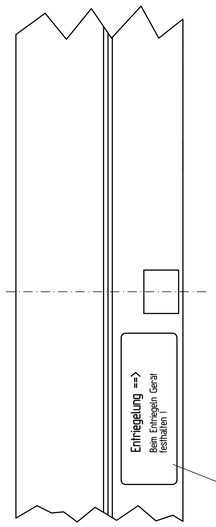

lose beigelegt wird:
Puffer d=12x1,5 dick 924 017 14 - 6 Stück ⓐ
Zylinderschraube M4x12 DIN912 B9 4 Stück
Fuß ---------- 504 658 19 - 2 Stück
unterer Fuß ------ 504 658 56 - 2 Stück
6 Kl Stiftschlüssel -- 832 001 00 - 1 Stück
Montageanleitung --- 440 082 27 - 1 Stück

alle Teile in Polybeutel
931 098 41 verpackt

Werkstoff							
Rohteil							
	a	1x	202620	Sach.-Nr 924 017 13 in 924 017 14 geändert		02.12.96	T.Kaltenbach
	Änd.-Index	Anzahl vor	Änd.Nr.	Änderungstext		Datum	Name
Marquette Hellige GmbH Munzinger Str. 3 D-79111 Freiburg	Maßstab 1:1		Datum	Name	Sach-Nr	202 307 02	
		Entworfen	06.12.95	A.Wender			
		Geprüft	06.12.95	A.Wender			
		Normgepr.					
Paßmaß Abmaße	Freimaßtoleranz DIN 7168 mittel		Format	Benennung			
Oberfläche	Document No. 202307 02-D02		A0	Wandhalterung für CardioServ			

Copyright GE Medical Systems IT , Schutzvermerk nach DIN 34 beachten

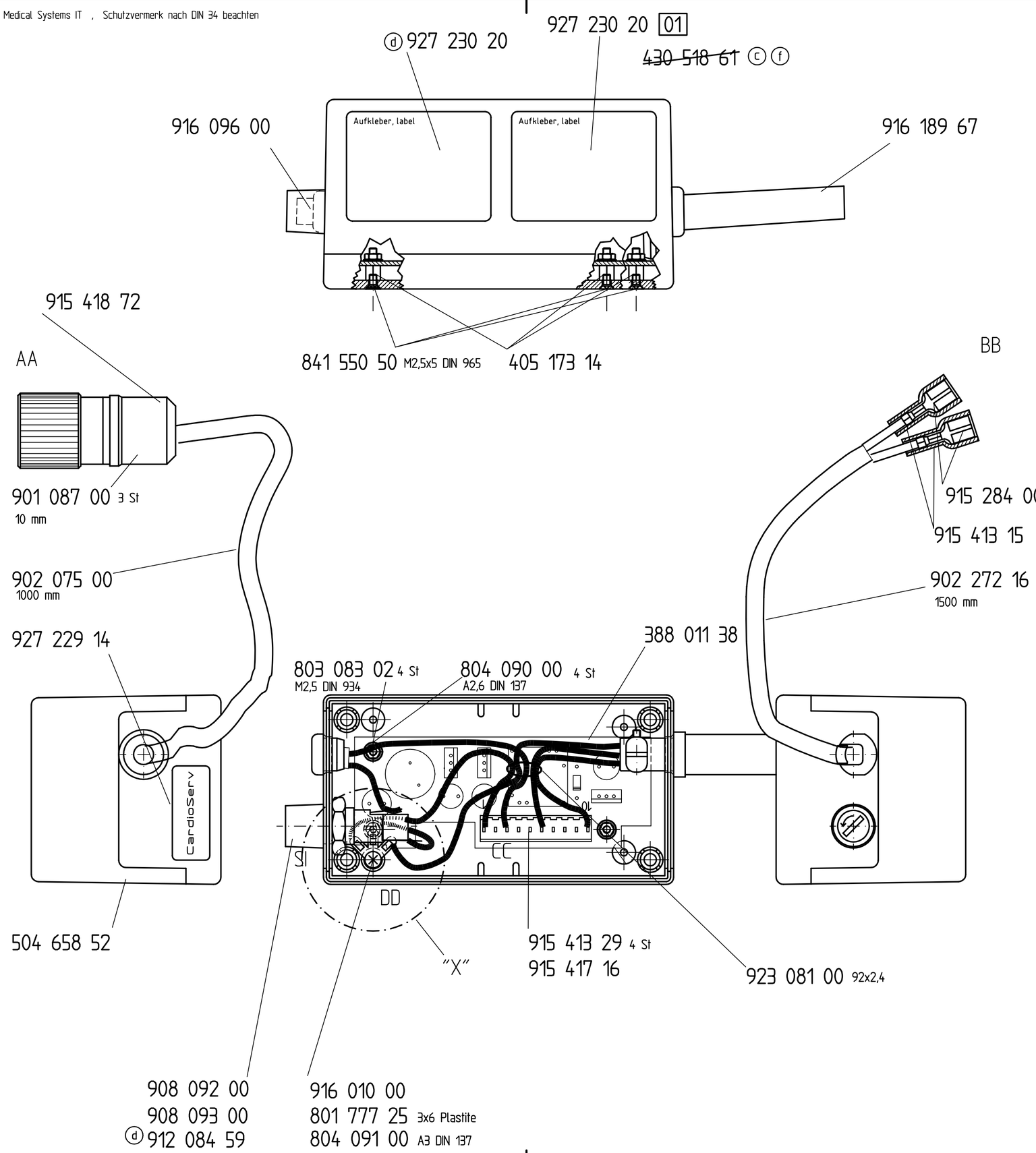

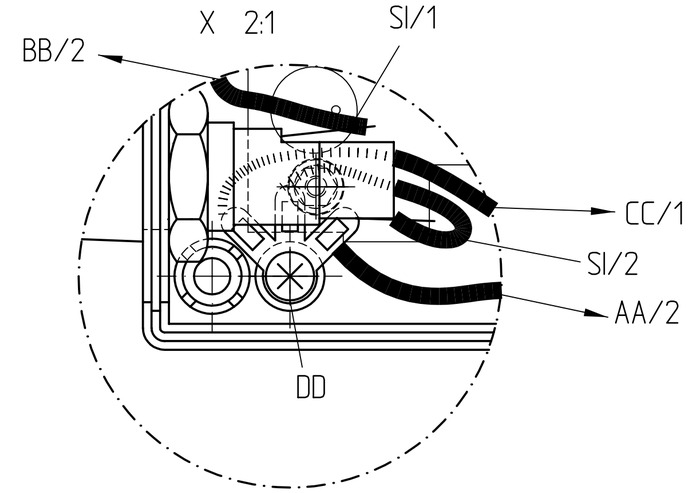

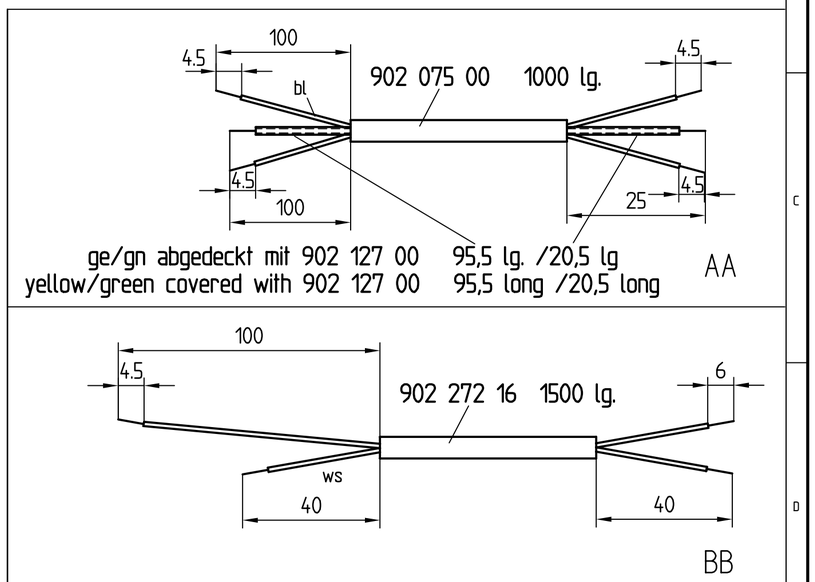

Lfd. Nr. No.	Pos. Pos.	Symbol Symbol	Abisolier-länge mm stripping length mm	Pos. Pos.	Sach-Nr. 902... Part No. 902...	Farbe color	Länge mm length mm	mm² AWG mm² AWG	Bemerkungen und Skizzen comments and drawings
1	AA/1		4,5 / 4,5	CC/10	075 00	br	1000	18	915 413 29
2	AA/2		4,5 / 4,5	DD	075 00	bl	1000	18	
3	AA/		4,5 / 4,5	CC/6	075 00	gn/ge	1000	18	
4	BB/1		6.0 / 4,5	CC/3	272 16	sw	1500	18	915 284 00
5	BB/2		6.0 / 4,5	SI/1	272 16	ws	1500	18	und, and 915 413 15
6	SI/2		4.5 / 4,5	DD	153 00	rt	30	18	
7	DD		4.5 / 4,5	CC/1	153 00	rt	100	18	
8	AA				901 087 00		3x10		
9	AA				901 127 00	sw	20,5		
10	CC/6				901 127 00	sw	95.5		

GE Medical Systems IT GmbH
Munzinger Str. 3
D-79111 Freiburg

Werkstoff - Material

Rohteil

Änd.Index Revision	kommt vor numbers	ECO No.	Änderungsbeschreibung - Change Description	Datum - Date	Name
f	1x	077066	label 430 518 61 removed	04.05.2004	B.Deimel
e		074735	englischen Text hinzu	26.09.03	Landauer
d	2x	202835	Sicherung in 912 084 59, Etikett hinzu	29.04.97	G.Kaltenbach
c	1x	202299	Firmenschild geändert	02.05.96	Koch
b		202097	Symbol für Kontakt geändert	04.12.95	A.Wendler
a		202036	Leitungen und Zeichnungsaufbau geändert	11.10.95	A.Wendler

Freimaßtoleranz - Tolerance: ISO2768 - mK	Projektion	Format: A2	Maßstab - Scale: 1:1	Oberfläche - Finish	
File Name: 20510601-D02_ZM01				Entworfen-Drawn	11.08.95 A.Wendler
				Geprüft-Approved	11.08.95 U.Steffan
				Geprüft-Approved	
Dokument Bezeichnung - Document Description: doc mech dwg ZM01	Zeichn.Art/Blatt Nr.: ZM/01	Teil Bezeichnung - Part Description: PWR SPLY CARDIOSERV 12V		Teil Nr. - Part Number: 205 106 01	
Dokument Nr. - Document No.: 20510601-D02					

Copyright GE Medical Systems IT, Schutzvermerk nach DIN 34 beachten

Schnitt D-D

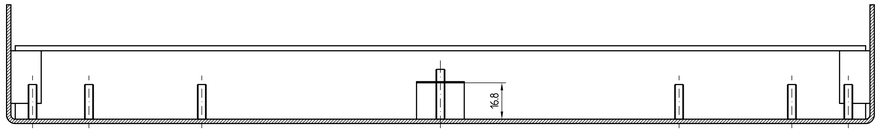

Schnitt A-A

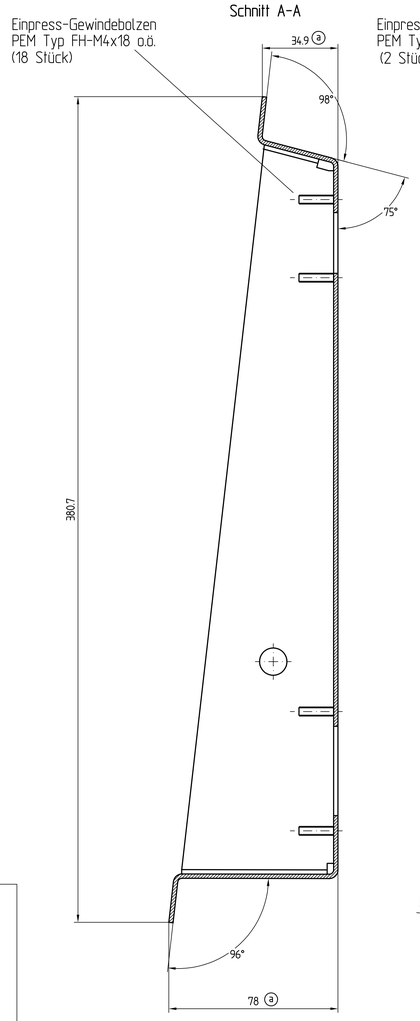

Schnitt B-B

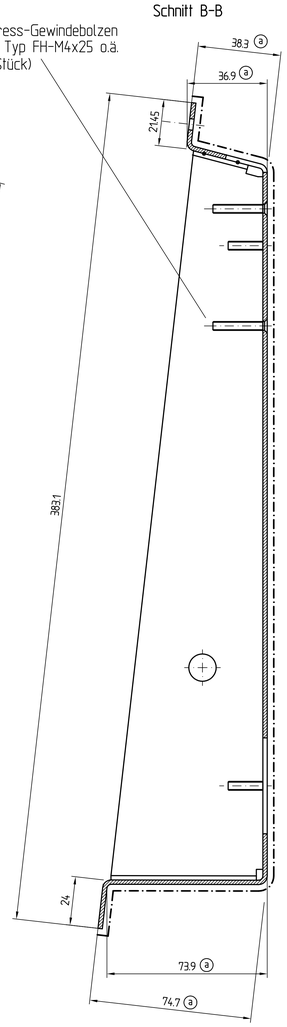

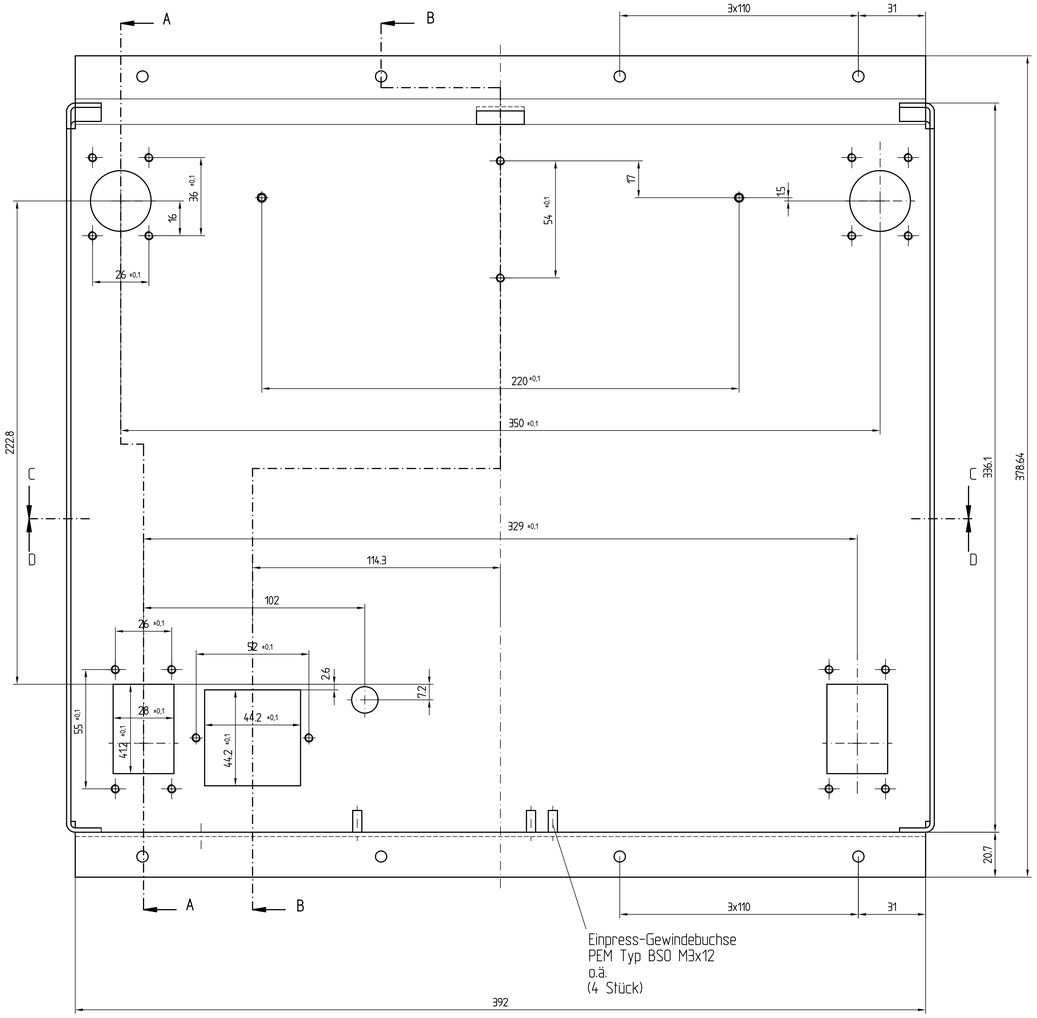

Abwicklung M 1:2

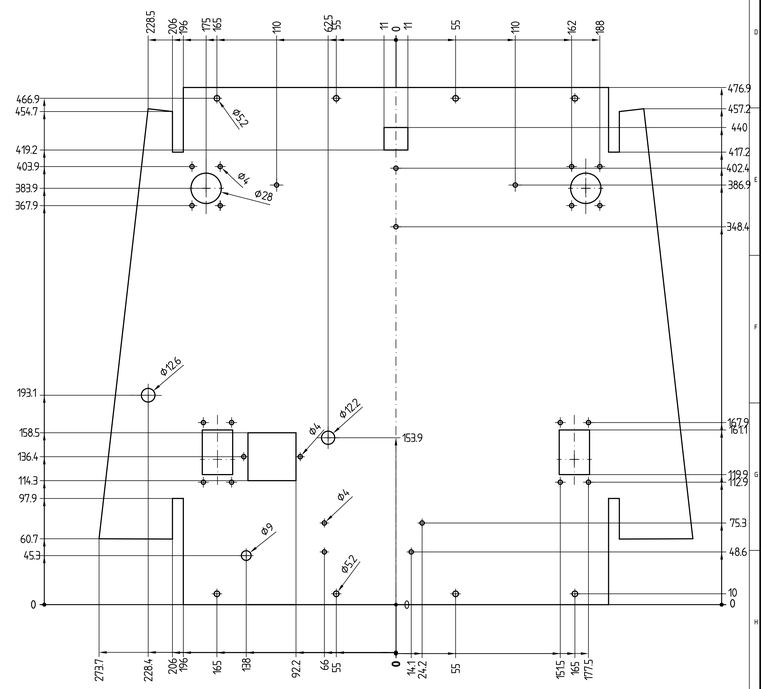

ⓐ Platinenmaße sind gerechnete Maße !
Genaue Maße müssen durch Biegeversuche ermittelt werden !!

Schnitt C-C

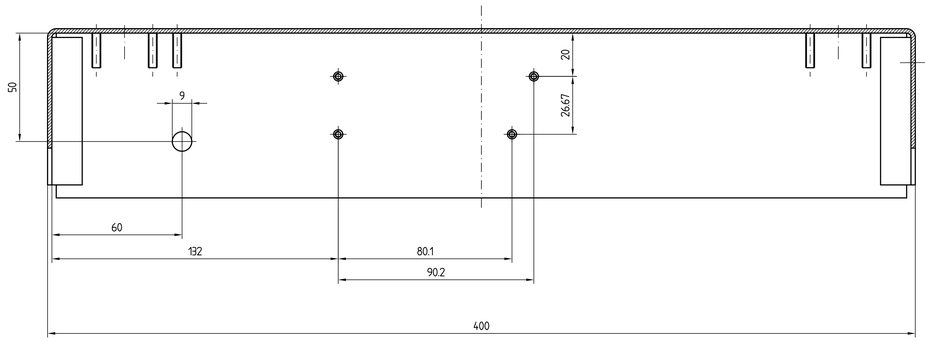

Alle Laschen punktgeschweißt
oder mit Hohlnieten genietet

Gewinde-Einpressbolzen
nach dem Beschichten auf
Oberfläche nicht sichtbar

Alle Biegekanten R2

pulverbeschichtet RAL 9002, glatt

GE Medical Systems IT GmbH Munzinger Str. 3 D-79111 Freiburg						
Werkstoff - Material AlMg3 H111-W19						
Kontrol Bl 2 DIN 1783	a	7x	20.21.98	Kontur um 1mm Richtung Wand vergrößert	11.12.95	A.Wendler
	Geändert Replaced	Gelöscht Deleted	ECO No.	Änderungsbeschreibung - Change Description	Datum - Date	Name
Freiheitsmaße - Tolerance DIN 7168 mittel	Projektion		Format A0	Maßstab - Scale 1:1	Oberfläche - Finish	Datum - Date / Name
File Name 504658 18-D02_ZM01						Gezeichnet-Drawn 12.04.95 A.Wendler Geprüft-Approved 13.04.95 A.Wendler Genehmigt-Approved
Dokument Bezeichnung - Document Description doc mech dwg ZM01	Zeichn.Art/Blatt Nr.		Teil Bezeichnung - Part Description		Teil Nr. - Part Number	
Dokument Nr. - Document No. 504658 18-D02	ZM/01		Gehäuse, Autohalterung		504 658 18	

Schutzvermerk nach DIN 34 beachten

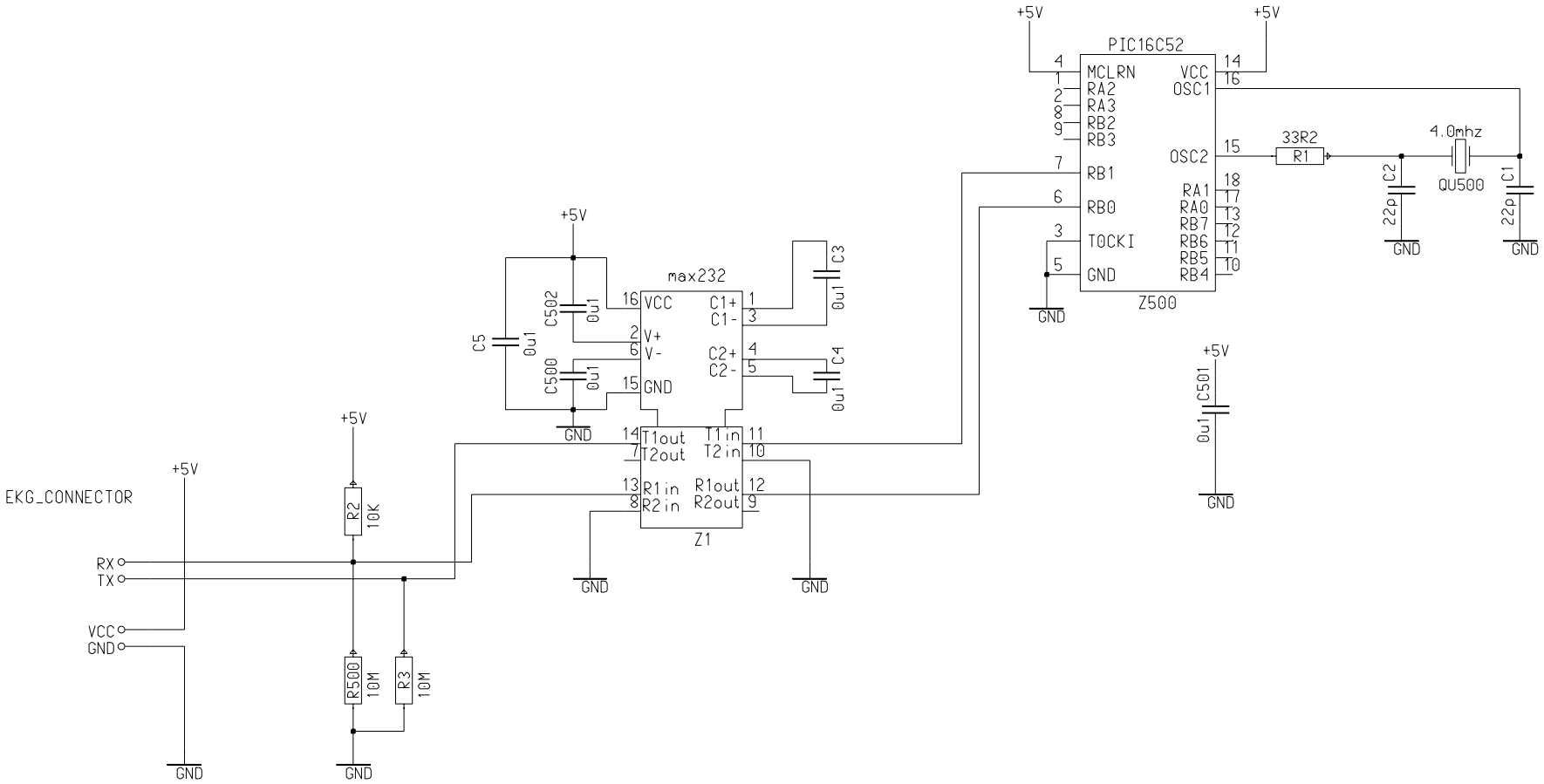

Marquette Hellige GmbH D-79007 Freiburg						388 032 03 P	Sheet: 1 of 1
Not equipped in Version :	REVISIONS Revision-No	Index	Date / Name	A04	F67211	LPL DEFI_HWDONGLE	
1)					Date / Name		
2)				DRAWN	21.03.96/SNA	PCB DEFI_HWDONGLE	
3)				APPROVED	11.07.96/SNA		
4)							
5)				ISSUED	M&E/ALLGEIER		

[1997, 7, 1, 3]

Schutzvermerk nach DIN 34 beachten.

BT-AS = 9
BT-BS = 10
LOET-AS = 36
LOET-BS = 28

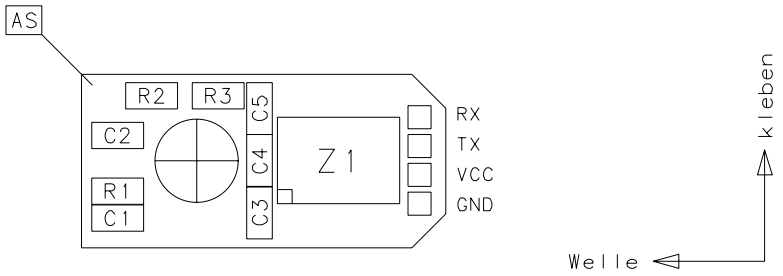

BARCODE 1/2 AUF BS, 1/2 AUF AS

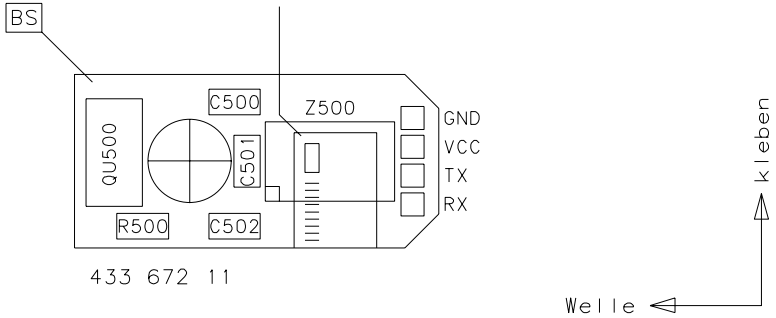

433 672 11

Marquette Hellige GmbH D-79007 Freiburg					388 032 03 R
REVISIONS			M1.5:1	A04 F67211	LPL.DEFI_HWDONGLE
Revision-No	Index	Date/Name		Date/Name	
			Drawn	17.04.96/JOK	PCB DEFI_WWDONGLE
			Approved	17.04.96/JOK	
			Issued	M&E/ALLGEIER	

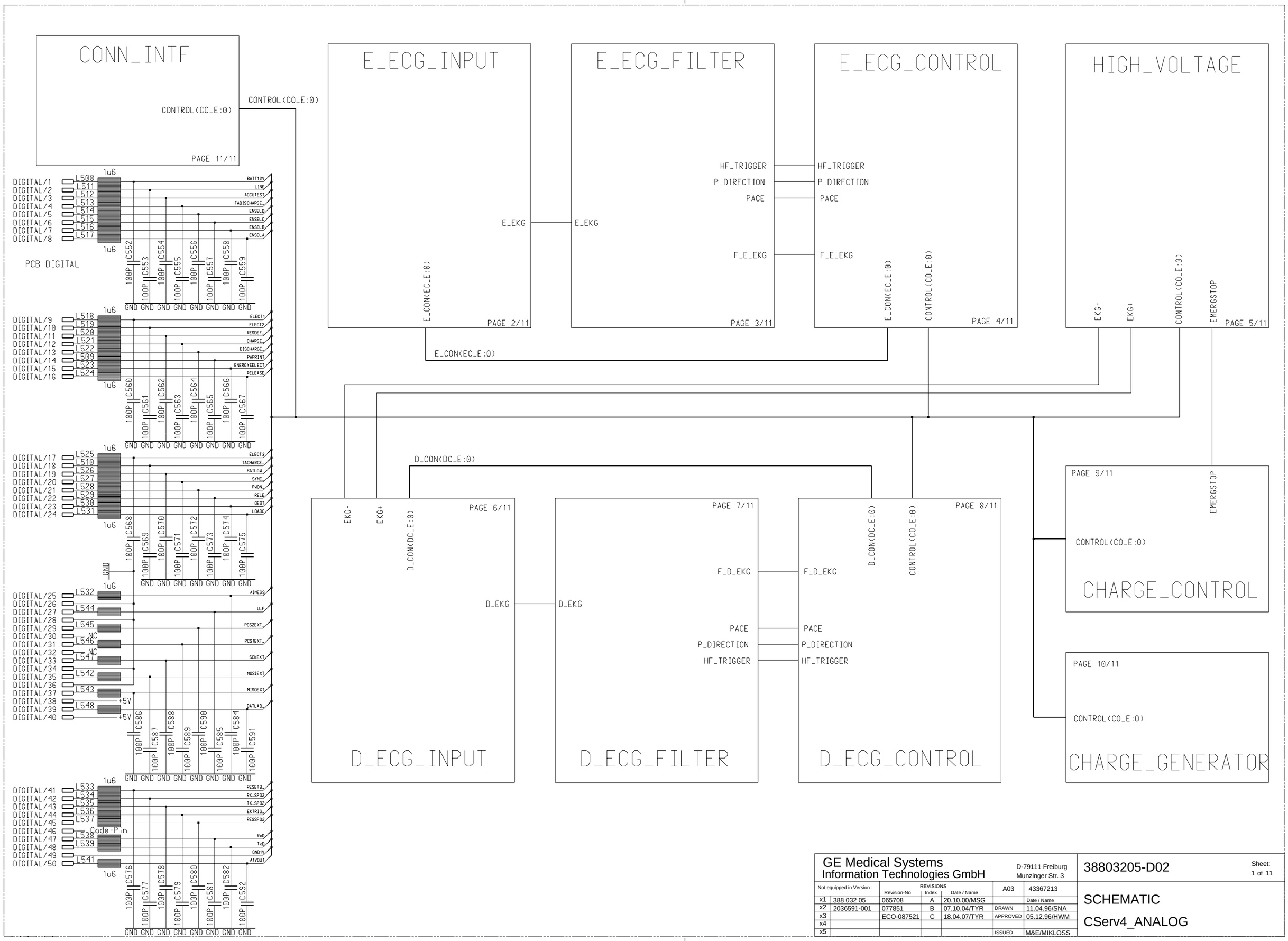

GE Medical Systems Information Technologies GmbH					D-79111 Freiburg Munzinger Str. 3		38803205-D02	Sheet: 1 of 11
Not equipped in Version :		REVISIONS Revision-No	Index	Date / Name	A03	43367213		
x1	388 032 05	065708	A	20.10.00/MSG		Date / Name	SCHEMATIC	
x2	2036591-001	077851	B	07.10.04/TYR	DRAWN	11.04.96/SNA		
x3		ECO-087521	C	18.04.07/TYR	APPROVED	05.12.96/HWM		
x4								
x5					ISSUED	M&E/MIKLOSS	CServ4_ANALOG	

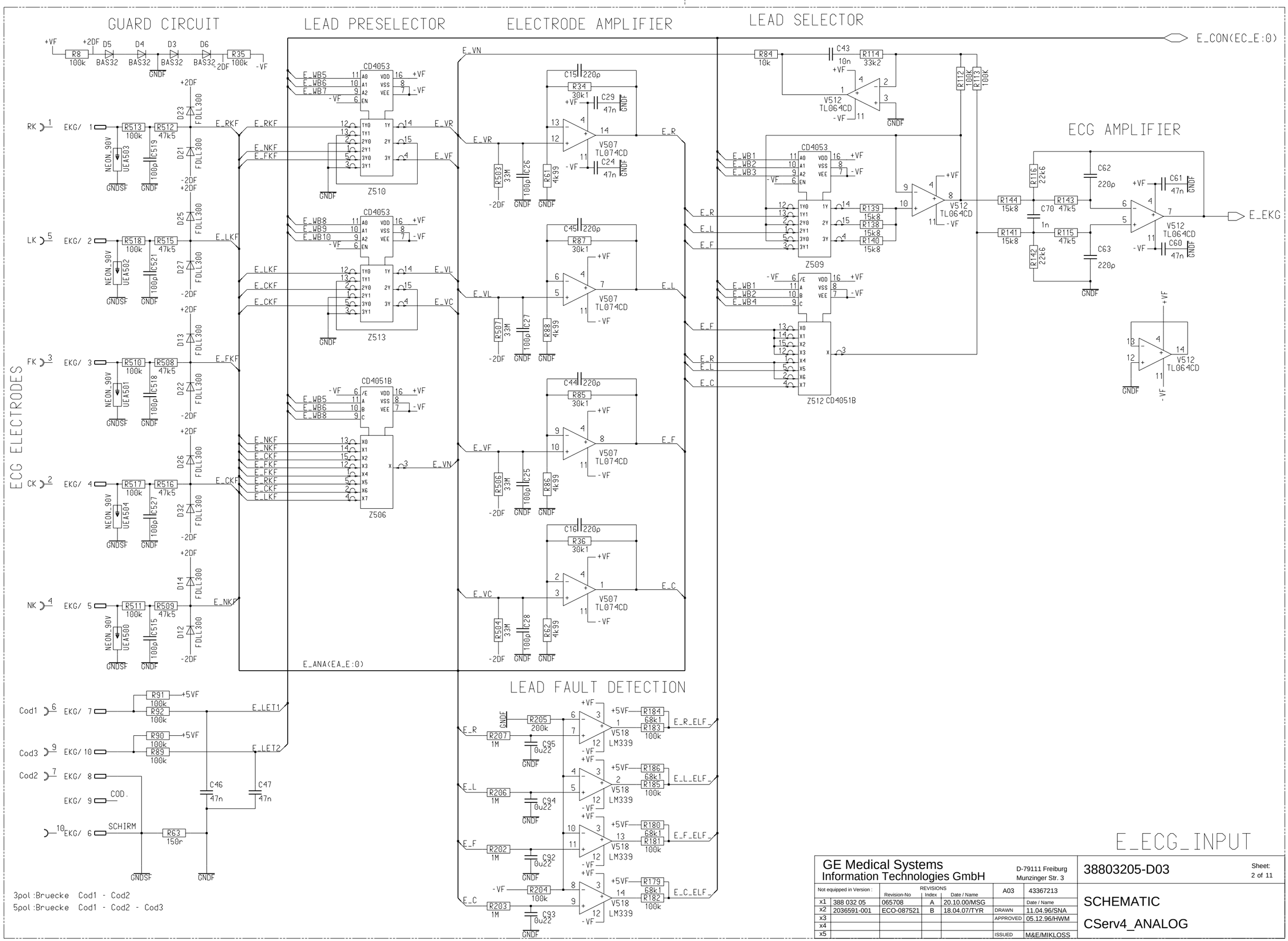

GE Medical Systems
Information Technologies GmbH
D-79111 Freiburg
Munzinger Str. 3

Not equipped in Version :		REVISIONS Revision-No	Index	Date / Name	A03	43367213
x1	388 032 05	065708	A	20.10.00/MSG		Date / Name
x2	2036591-001	ECO-087521	B	18.04.07/TYR	DRAWN	11.04.96/SNA
x3					APPROVED	05.12.96/HWM
x4						
x5					ISSUED	M&E/MIKLOSS

38803205-D03

Sheet: 2 of 11

SCHEMATIC

CServ4_ANALOG

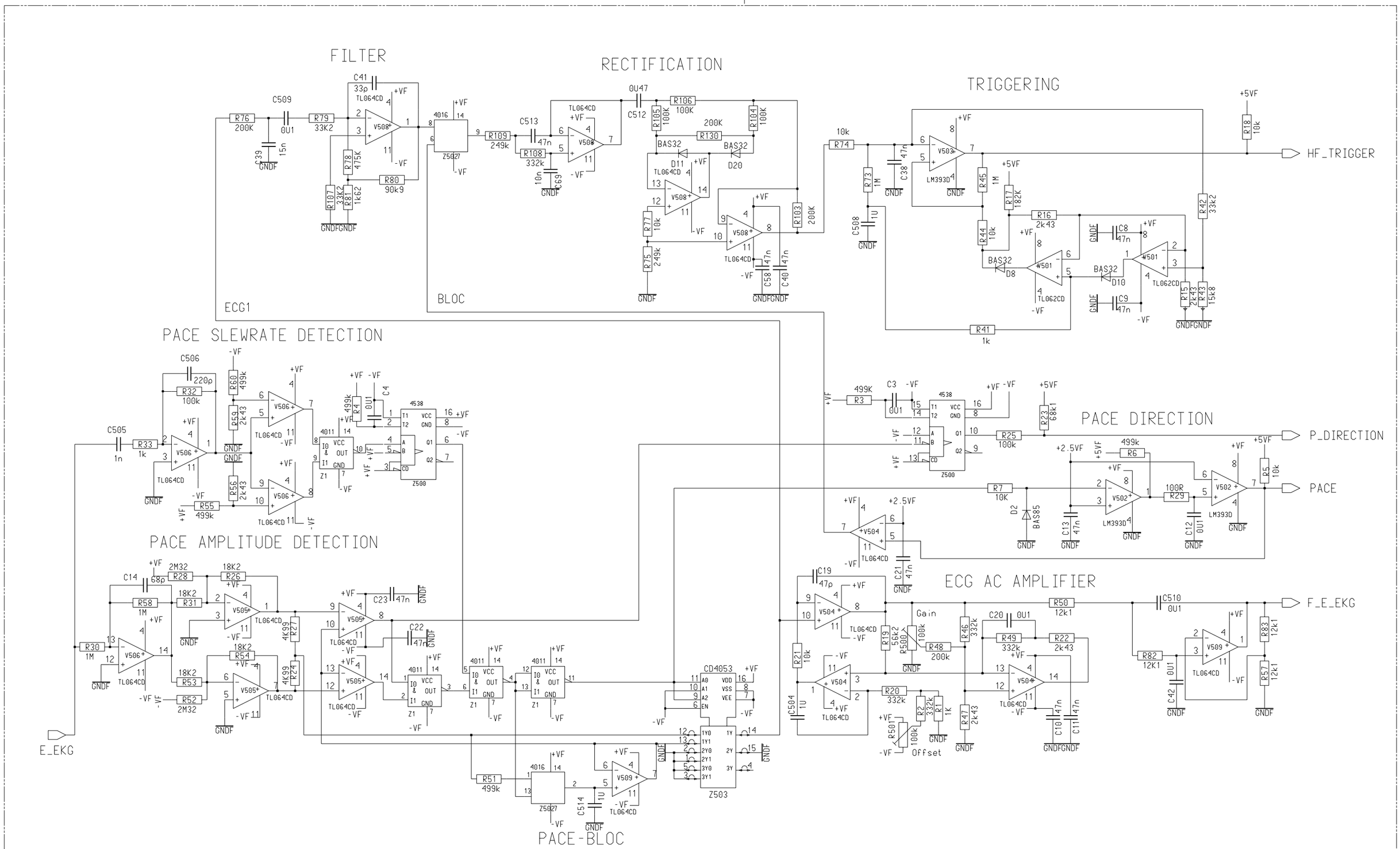

E_ECG_FILTER

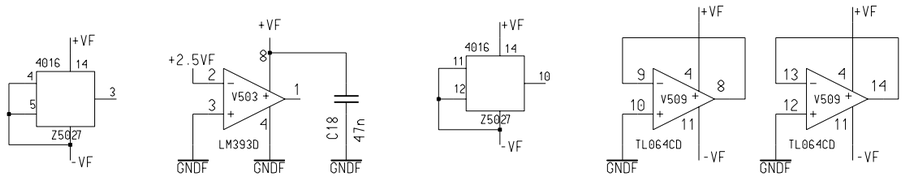

GE Medical Systems Information Technologies GmbH				D-79111 Freiburg Munzinger Str. 3		38803205-D04
Not equipped in Version :		REVISIONS			A03	43367213
		Revision-No	Index	Date / Name		Date / Name
x1	388 032 05	202826	A	14.04.97/JOK		
x2	2036591-001	203194	B	17.12.97/JOK	DRAWN	11.04.96/SNA
x3		065708	C	20.10.00/MSG	APPROVED	05.12.96/HWM
x4		ECO-087521	D	18.04.07/TYR		
x5					ISSUED	M&E/MIKLOSS

Sheet: 3 of 11

SCHEMATIC

CServ4_ANALOG

Schutzvermerk nach DIN 34 beachten

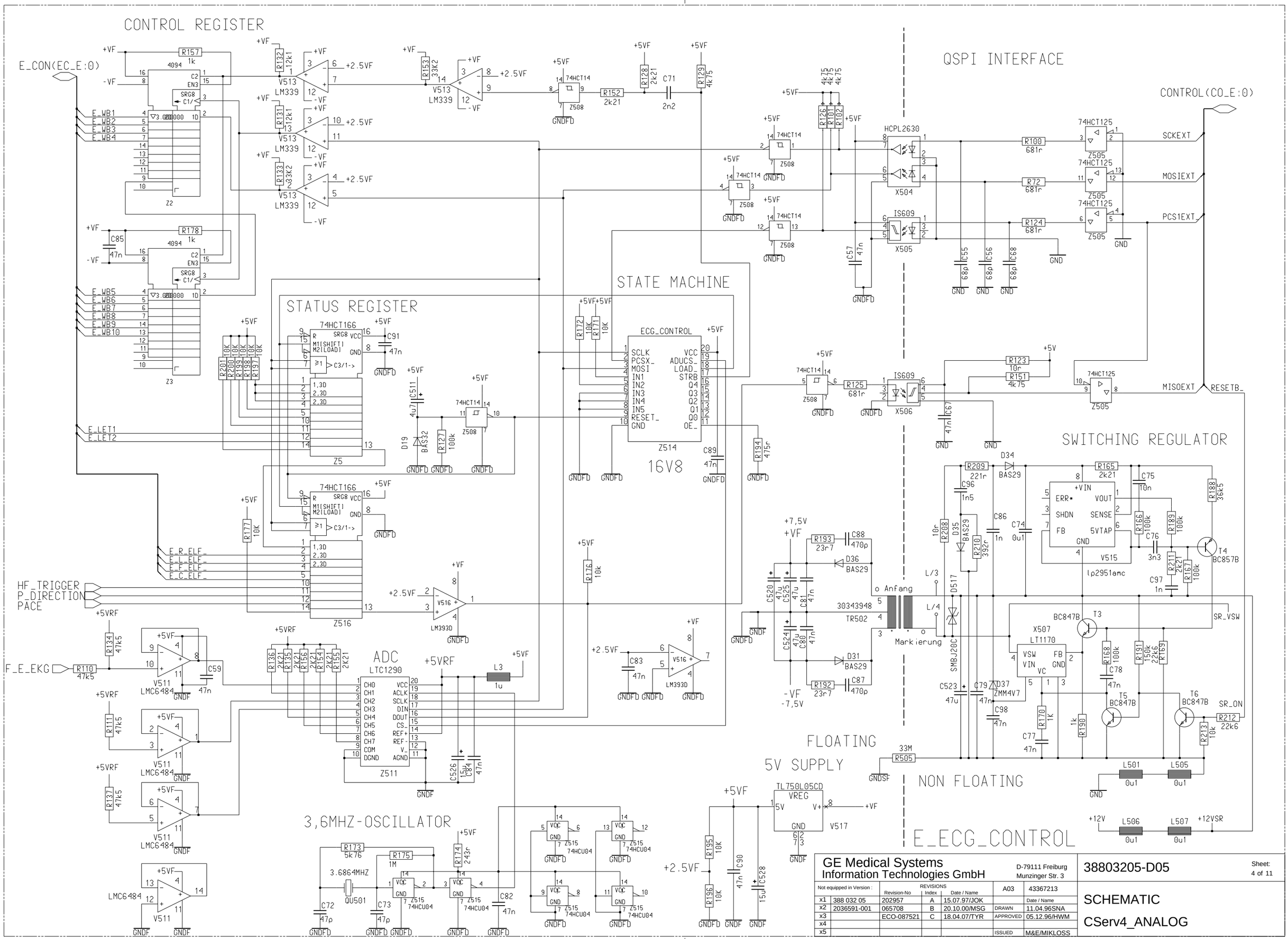

GE Medical Systems
Information Technologies GmbH
D-79111 Freiburg
Munzinger Str. 3

Not equipped in Version :		REVISIONS			A03	43367213
		Revision-No	Index	Date / Name		Date / Name
x1	388 032 05	202957	A	15.07.97/JOK		
x2	2036591-001	065708	B	20.10.00/MSG	DRAWN	11.04.96SNA
x3		ECO-087521	C	18.04.07/TYR	APPROVED	05.12.96/HWM
x4						
x5					ISSUED	M&E/MIKLOSS

38803205-D05

Sheet: 4 of 11

SCHEMATIC

CServ4_ANALOG

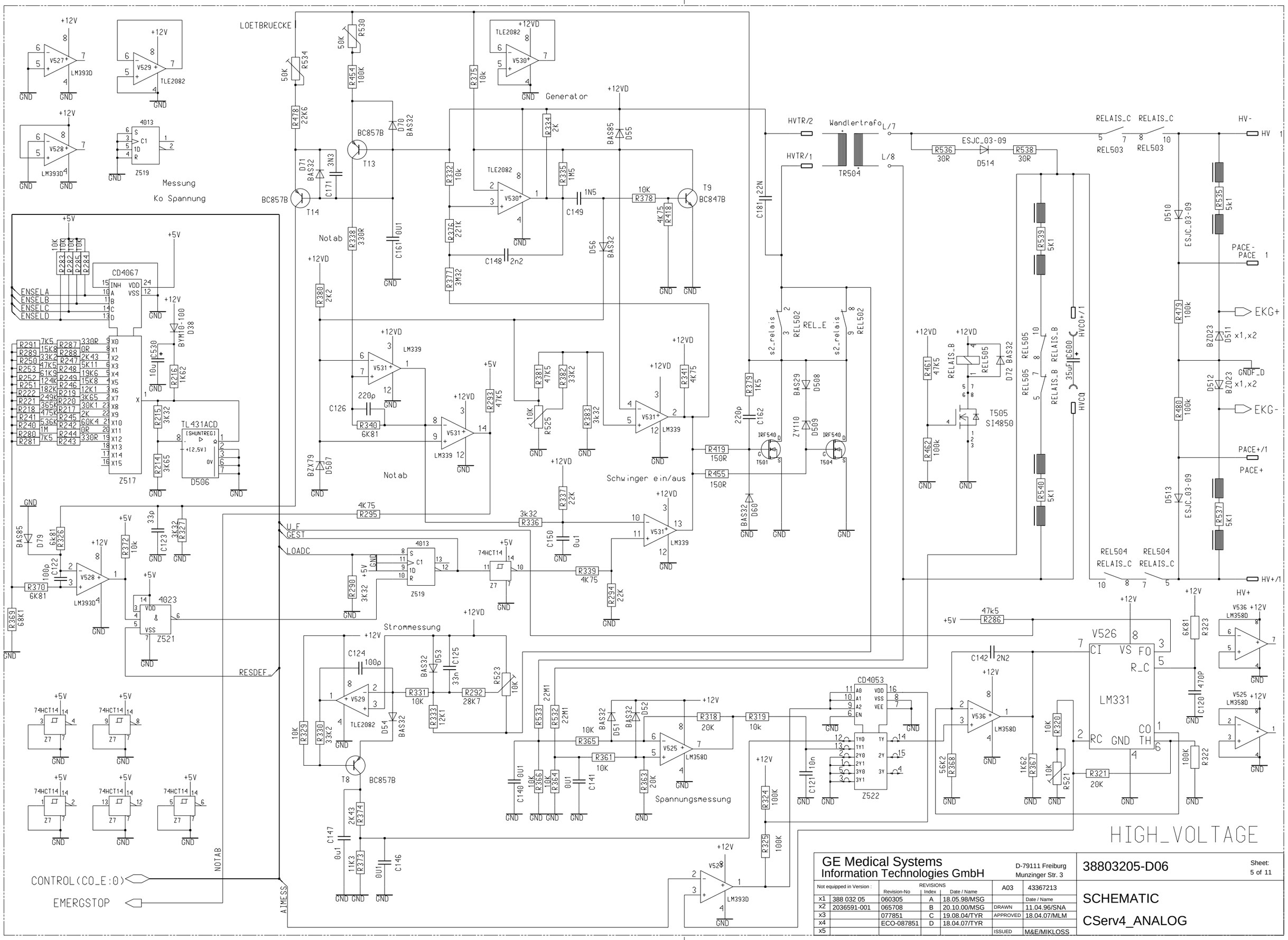
LOETBRUECKE
Generator
Wandlertrafo
TR504
HVTR/2
HVTR/1
RELAIS_C
REL503
REL504
ESJC_03-09
HV-
HV
HV+/1
HV+
PACE-
PACE
EKG+
EKG-
GNDF_D
PACE+/1
PACE+
Messung
Ko Spannung
Notab
Schwinger ein/aus
Strommessung
Spannungsmessung
CD4067
CD4053
LM331
TL431ACD
Z517
Z519
Z521
Z522
U_F
GEST
LOADC
RESDEF_
NOTAB
AIMESS
CONTROL(CO_E:0)
EMERGSTOP
HIGH_VOLTAGE
Schutzvermerk nach DIN 34 beachten
GE Medical Systems
Information Technologies GmbH
D-79111 Freiburg
Munzinger Str. 3
38803205-D06
Sheet: 5 of 11
SCHEMATIC
CServ4_ANALOG
REVISIONS
Revision-No
Index
Date / Name
A03
43367213
x1 388 032 05 060305 A 18.05.98/MSG
x2 2036591-001 065708 B 20.10.00/MSG
x3 077851 C 19.08.04/TYR
x4 ECO-087851 D 18.04.07/TYR
x5
DRAWN 11.04.96/SNA
APPROVED 18.04.07/MLM
ISSUED M&E/MIKLOSS

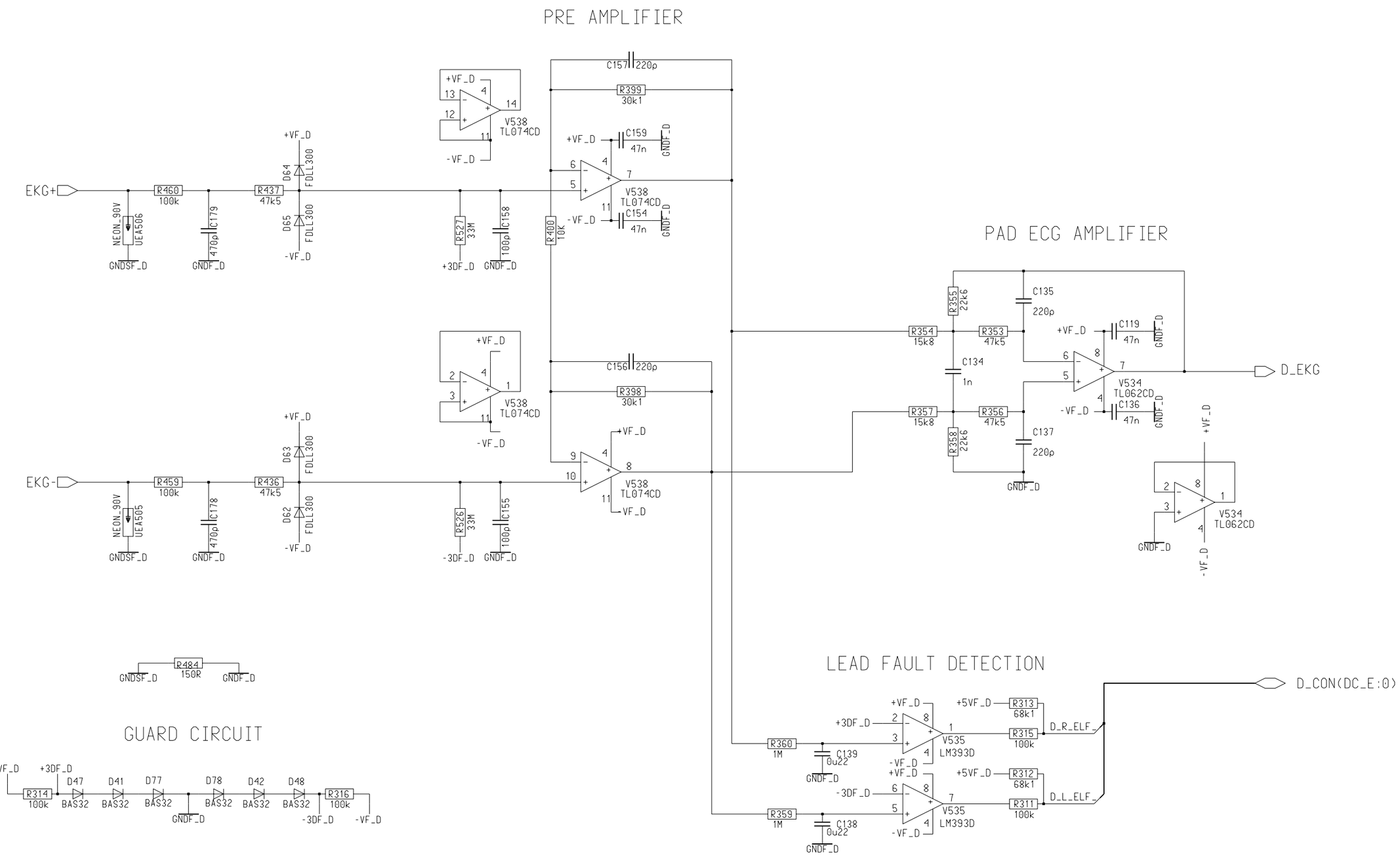

Schutzvermerk nach DIN 34 beachten

GE Medical Systems
Information Technologies GmbH
D-79111 Freiburg
Munzinger Str. 3

38803205-D07

Sheet: 6 of 11

Not equipped in Version :		REVISIONS Revision-No	Index	Date / Name	A03	43367213
x1	388 032 05	065708	A	20.10.00/MSG		Date / Name
x2	2036591-001	ECO-087521	B	18.04.07/TYR	DRAWN	11.04.96/SNA
x3					APPROVED	05.12.96/HWM
x4						
x5					ISSUED	M&E/MIKLOSS

SCHEMATIC

CServ4_ANALOG

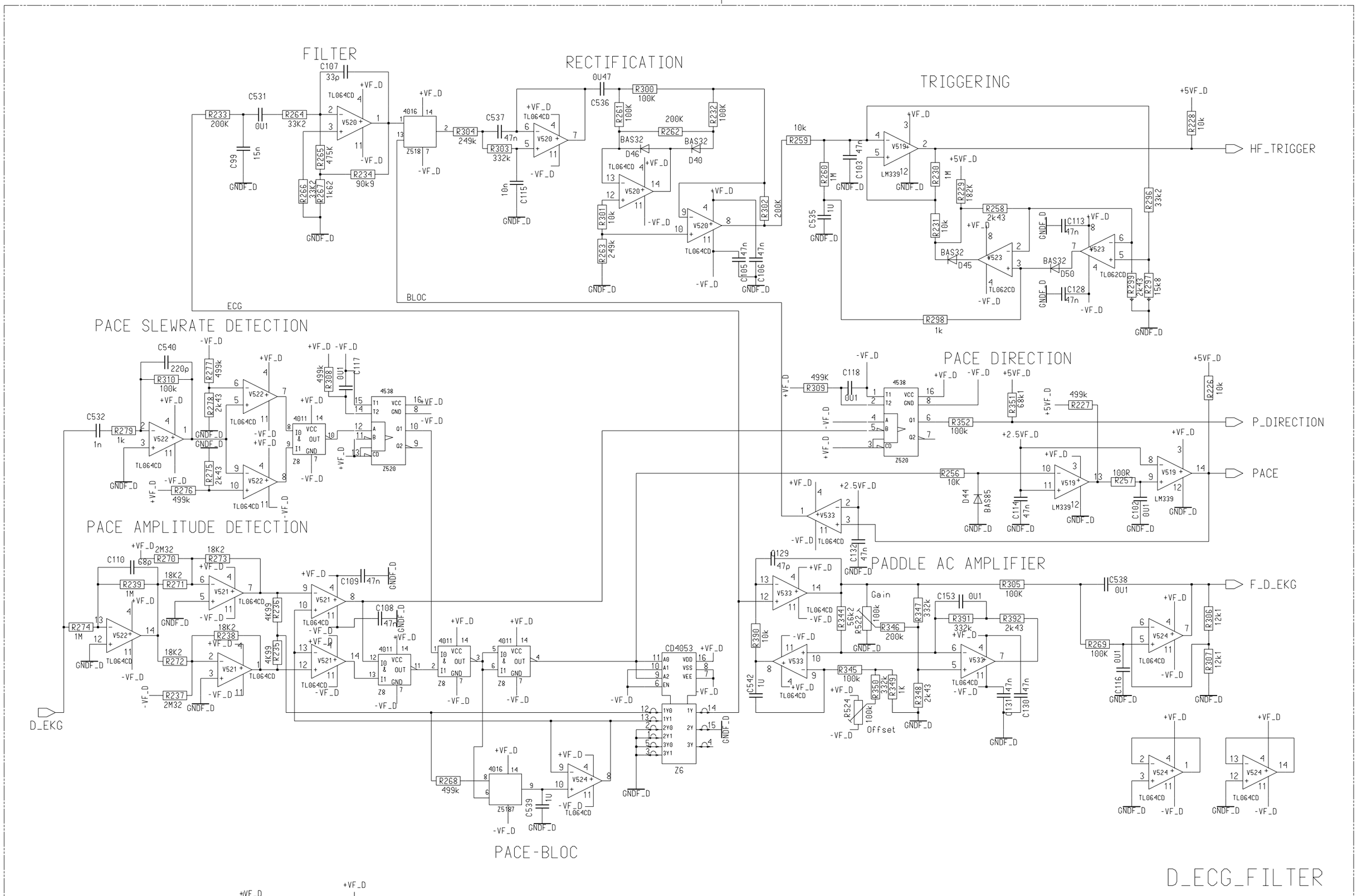

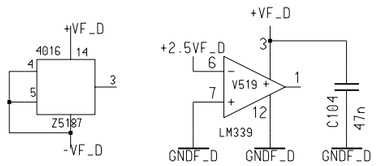

GE Medical Systems Information Technologies GmbH	D-79111 Freiburg Munzinger Str. 3	38803205-D08	Sheet: 7 of 11

Not equipped in Version :		REVISIONS Revision-No	Index	Date / Name	A03	43367213
x1	388 032 05	202826	A	14.04.97/JOK		Date / Name
x2	2036591-001	203194	B	17.12.97/JOK	DRAWN	11.04.96/SNA
x3		065708	C	20.10.00/MSG	APPROVED	05.12.96/HWM
x4		ECO-087521	D	18.04.07/TYR		
x5					ISSUED	M&E/MIKLOSS

SCHEMATIC

CServ4_ANALOG

Schutzvermerk nach DIN 34 beachten

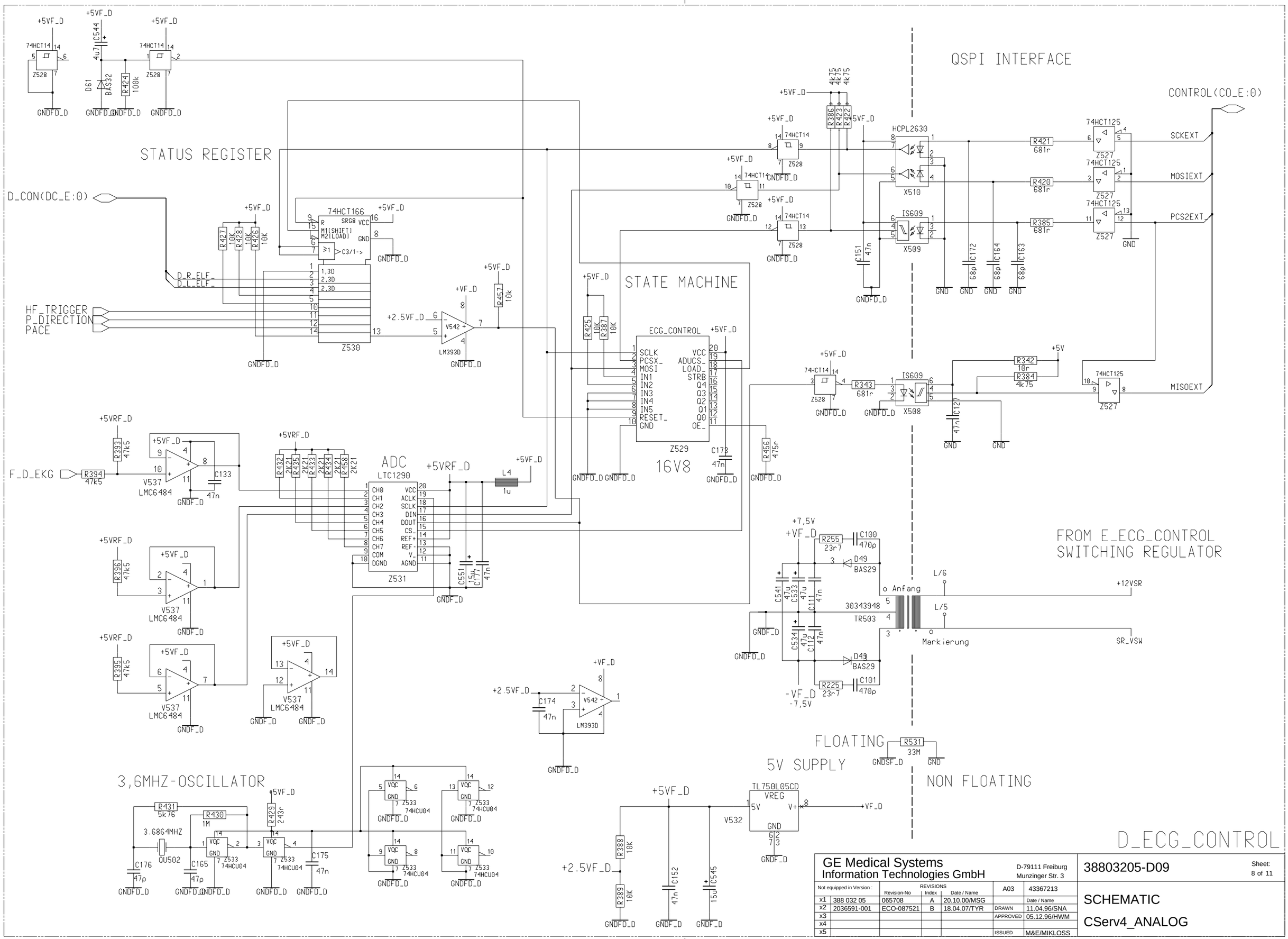

GE Medical Systems Information Technologies GmbH				D-79111 Freiburg Munzinger Str. 3	38803205-D09	Sheet: 8 of 11
Not equipped in Version :		REVISIONS Revision-No	Index	Date / Name	A03	43367213
x1	388 032 05	065708	A	20.10.00/MSG		Date / Name
x2	2036591-001	ECO-087521	B	18.04.07/TYR	DRAWN	11.04.96/SNA
x3					APPROVED	05.12.96/HWM
x4						
x5					ISSUED	M&E/MIKLOSS

SCHEMATIC

CServ4_ANALOG

Schutzvermerk nach DIN 34 beachten

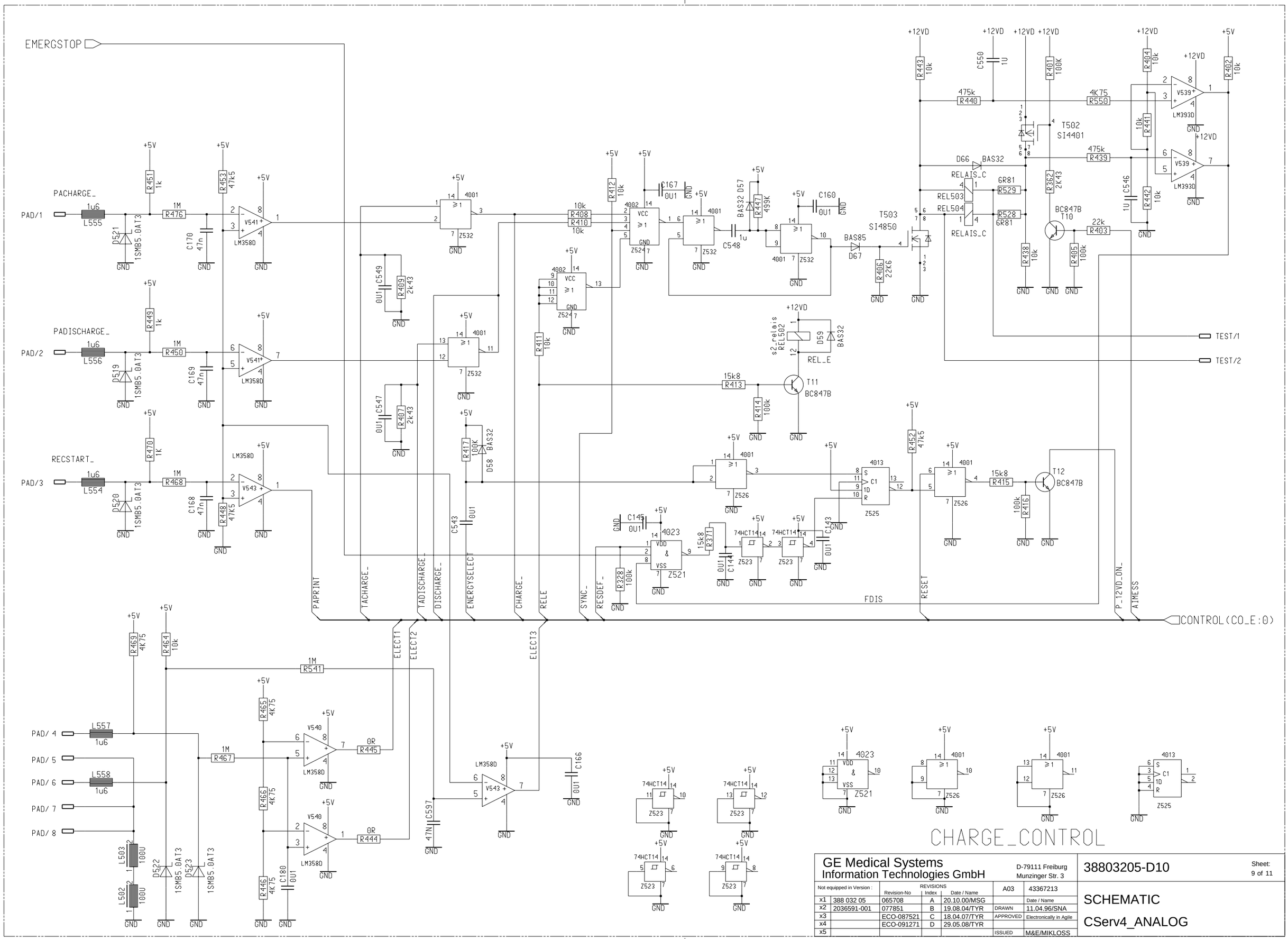

Schutzvermerk nach DIN 34 beachten

GE Medical Systems Information Technologies GmbH				D-79111 Freiburg Munzinger Str. 3	38803205-D10	Sheet: 9 of 11
Not equipped in Version :		REVISIONS			A03	43367213
		Revision-No	Index	Date / Name		
x1	388 032 05	065708	A	20.10.00/MSG		Date / Name
x2	2036591-001	077851	B	19.08.04/TYR	DRAWN	11.04.96/SNA
x3		ECO-087521	C	18.04.07/TYR	APPROVED	Electronically in Agile
x4		ECO-091271	D	29.05.08/TYR		
x5					ISSUED	M&E/MIKLOSS

SCHEMATIC

CServ4_ANALOG

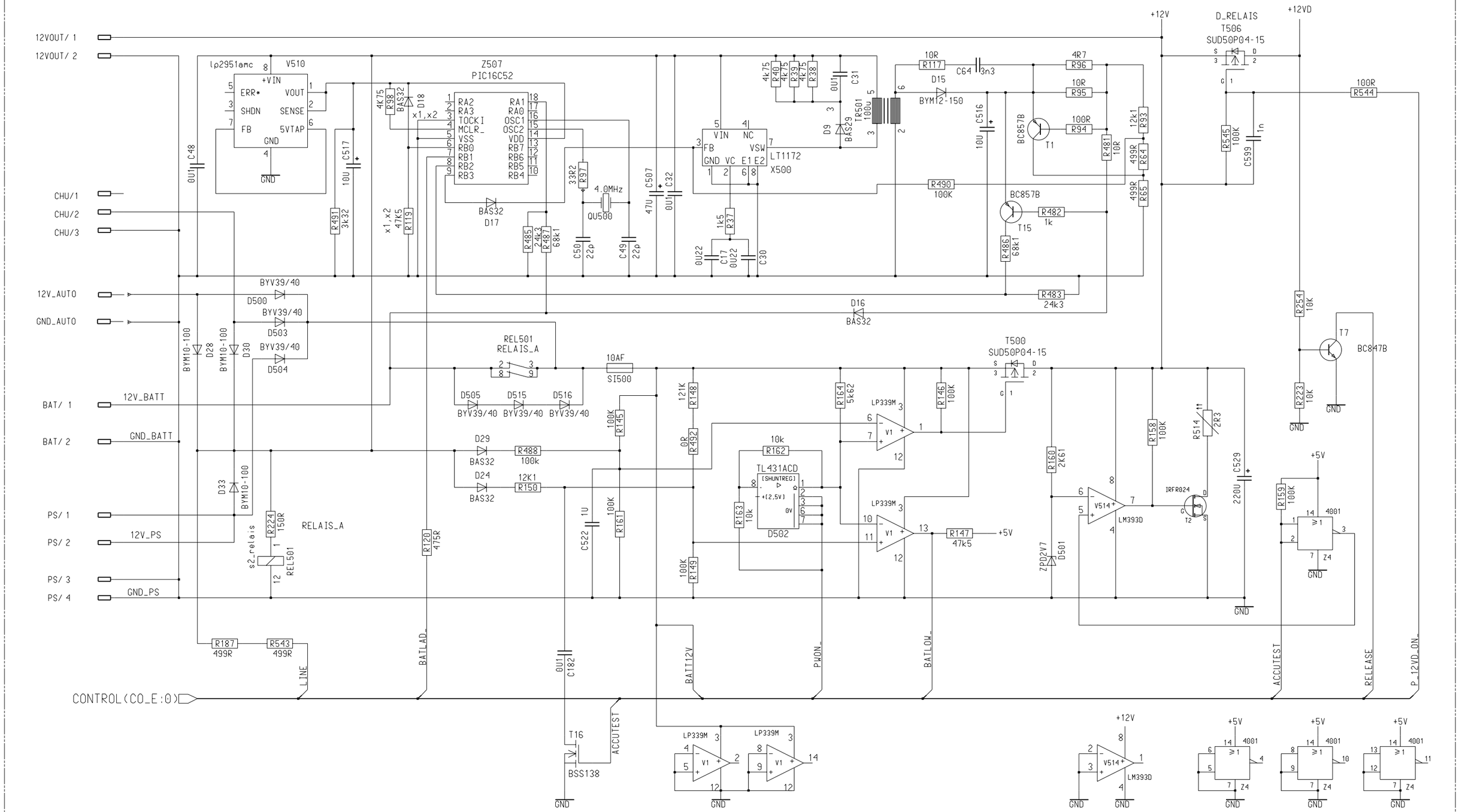

CHARGE_GENERATOR

GE Medical Systems Information Technologies GmbH					D-79111 Freiburg Munzinger Str. 3	38803205-D11	Sheet: 10 of 11
Not equipped in Version :		REVISIONS Revision-No	Index	Date / Name	A03	43367213	
x1	388 032 05	202957	B	15.07.97/JOK		Date / Name	SCHEMATIC
x2	2036591-001	060246	C	07.09.98/MSG	DRAWN	11.04.96/SNA	
x3		065708	D	20.10.00/MSG	APPROVED	05.12.96/HWM	
x4		077851	E	07.10.04/TYR			CServ4_ANALOG
x5		ECO-087521	F	18.04.07/TYR	ISSUED	M&E/MIKLOSS	

Schutzvermerk nach DIN 34 beachten

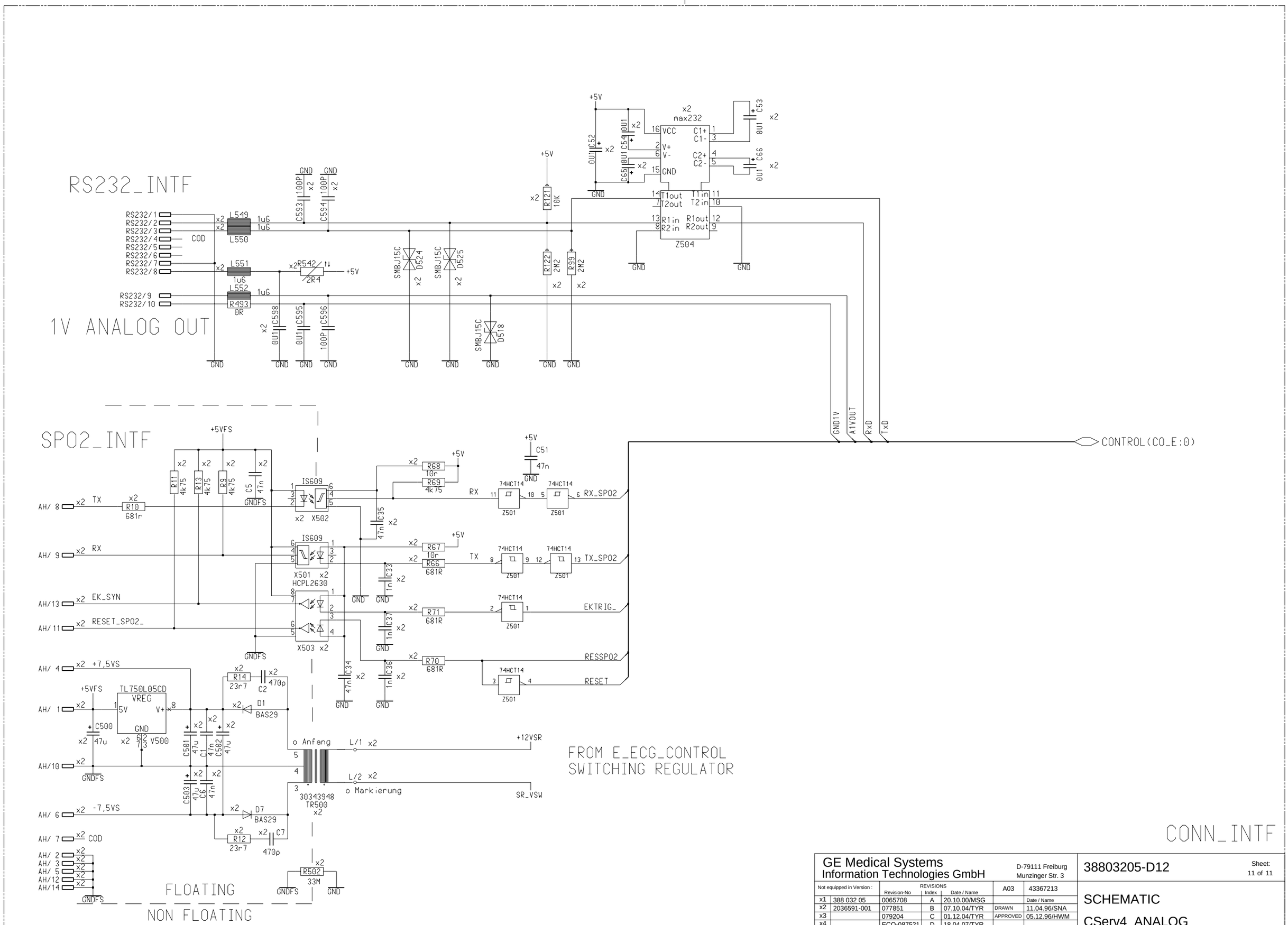

GE Medical Systems
Information Technologies GmbH
D-79111 Freiburg
Munzinger Str. 3

38803205-D12

Sheet: 11 of 11

Not equipped in Version :		REVISIONS			A03	43367213
		Revision-No	Index	Date / Name		Date / Name
x1	388 032 05	0065708	A	20.10.00/MSG		
x2	2036591-001	077851	B	07.10.04/TYR	DRAWN	11.04.96/SNA
x3		079204	C	01.12.04/TYR	APPROVED	05.12.96/HWM
x4		ECO-087521	D	18.04.07/TYR		
x5					ISSUED	M&E/MIKLOSS

SCHEMATIC

CServ4_ANALOG

BT-AS = 768
BT-BS = 257
LOET-AS = 2260
LOET-BS = 981

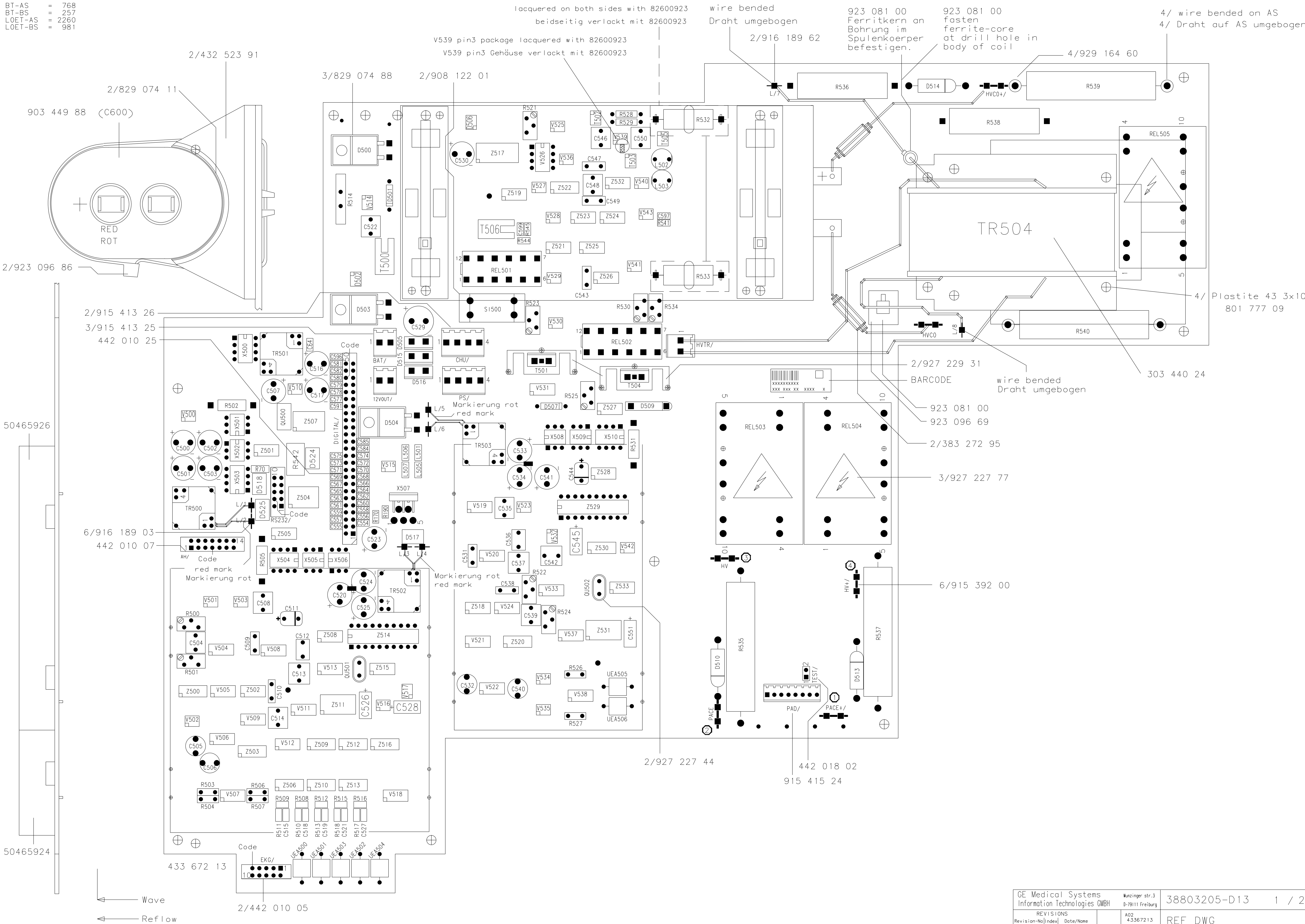

Schutzvermerk nach DIN 34 beachten.

GE Medical Systems Information Technologies GMBH				Munzinger str.3 D-79111 Freiburg	38803205-D13 1 / 2
REVISIONS				A02 43367213	REF DWG
Revision-No	Index	Date/Name		Date/Name	CServ4_ANALOG
065708	F	20.10.00/MSG			
077851	G	18.08.04/TYR	Drawn	08.07.96/JOK	
087521	H	18.04.07/TYR	Approved	Electronically in Agile	
091271	I	29.05.08/TYR			
100388	J	19.08.10/TYR	Issued	M&E/MIKLOSS	

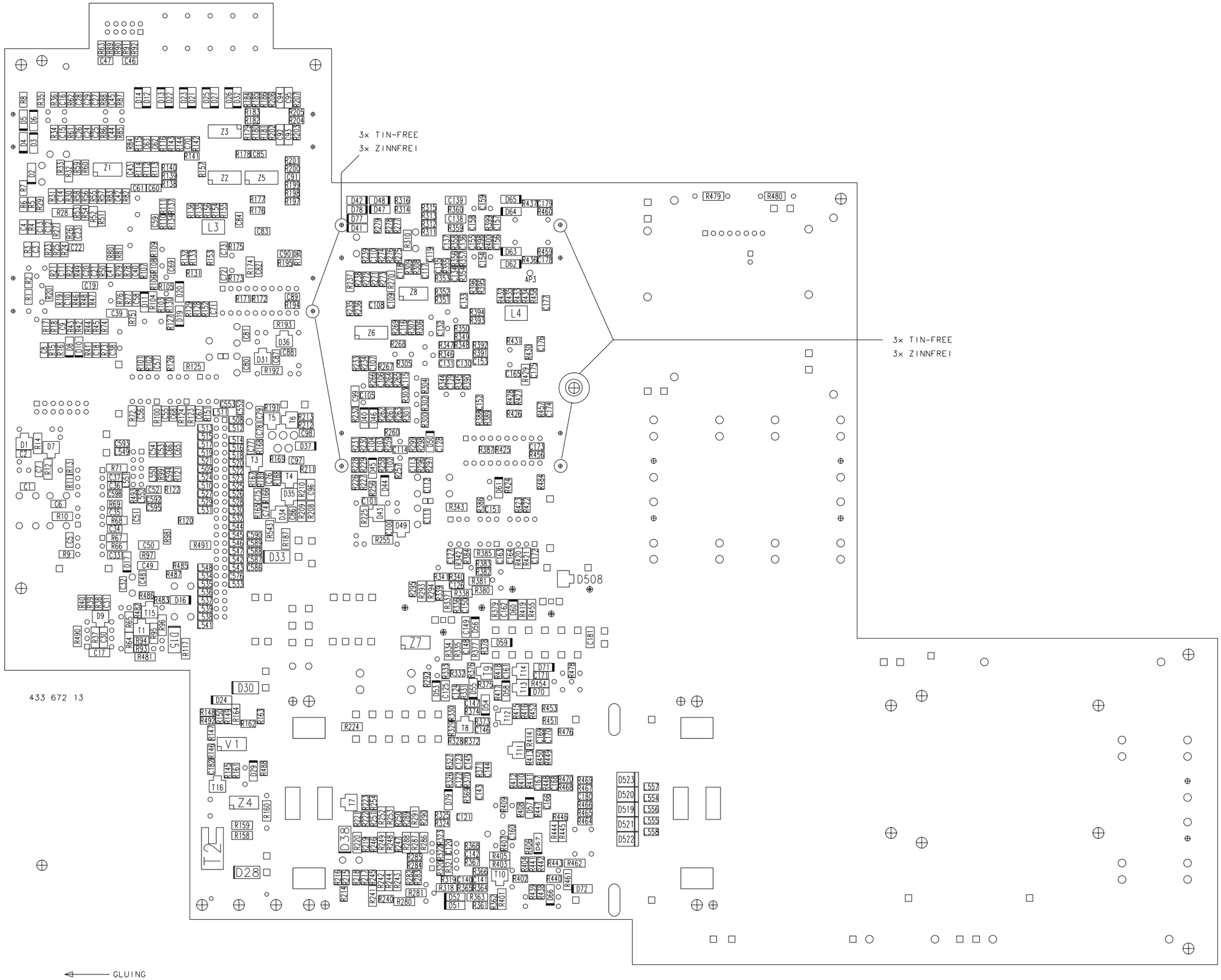

Schutzvermerk nach DIN 34 beachten.

GE Medical Systems Information Technologies GMBH			Munzinger str.3 D-79111 freiburg		38803205-D14 2 / 2
REVISIONS				A02 4.3367213	REF DWG
Revision-No	Index	Date/Name		Date/Name	CServ4_ANALOG
060246	F	07.09.98/MSG			
065708	G	20.10.00/MSG	Drawn	08.07.96/JOK	
077851	H	07.10.04/TYR	Approved	08.07.96/JOK	
079204	I	01.12.04/TYR			
087521	J	18.04.07/TYR	Issued	M&E/MIKLOSS	

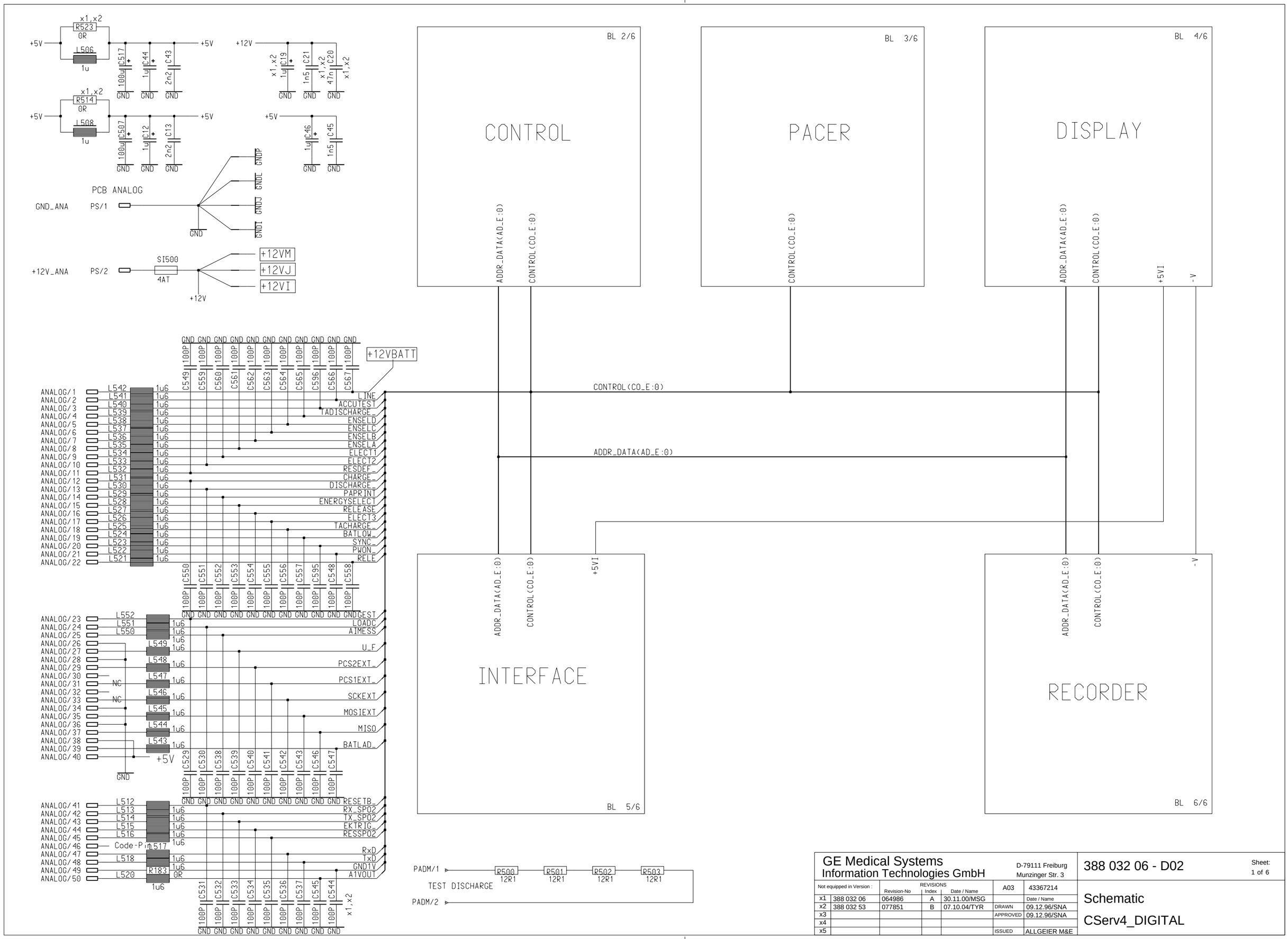

GE Medical Systems Information Technologies GmbH				D-79111 Freiburg Munzinger Str. 3		388 032 06 - D02
Not equipped in Version :		REVISIONS			A03	43367214
		Revision-No	Index	Date / Name		Date / Name
x1	388 032 06	064986	A	30.11.00/MSG		
x2	388 032 53	077851	B	07.10.04/TYR	DRAWN	09.12.96/SNA
x3					APPROVED	09.12.96/SNA
x4						
x5					ISSUED	ALLGEIER M&E

Sheet: 1 of 6

Schematic

CServ4_DIGITAL

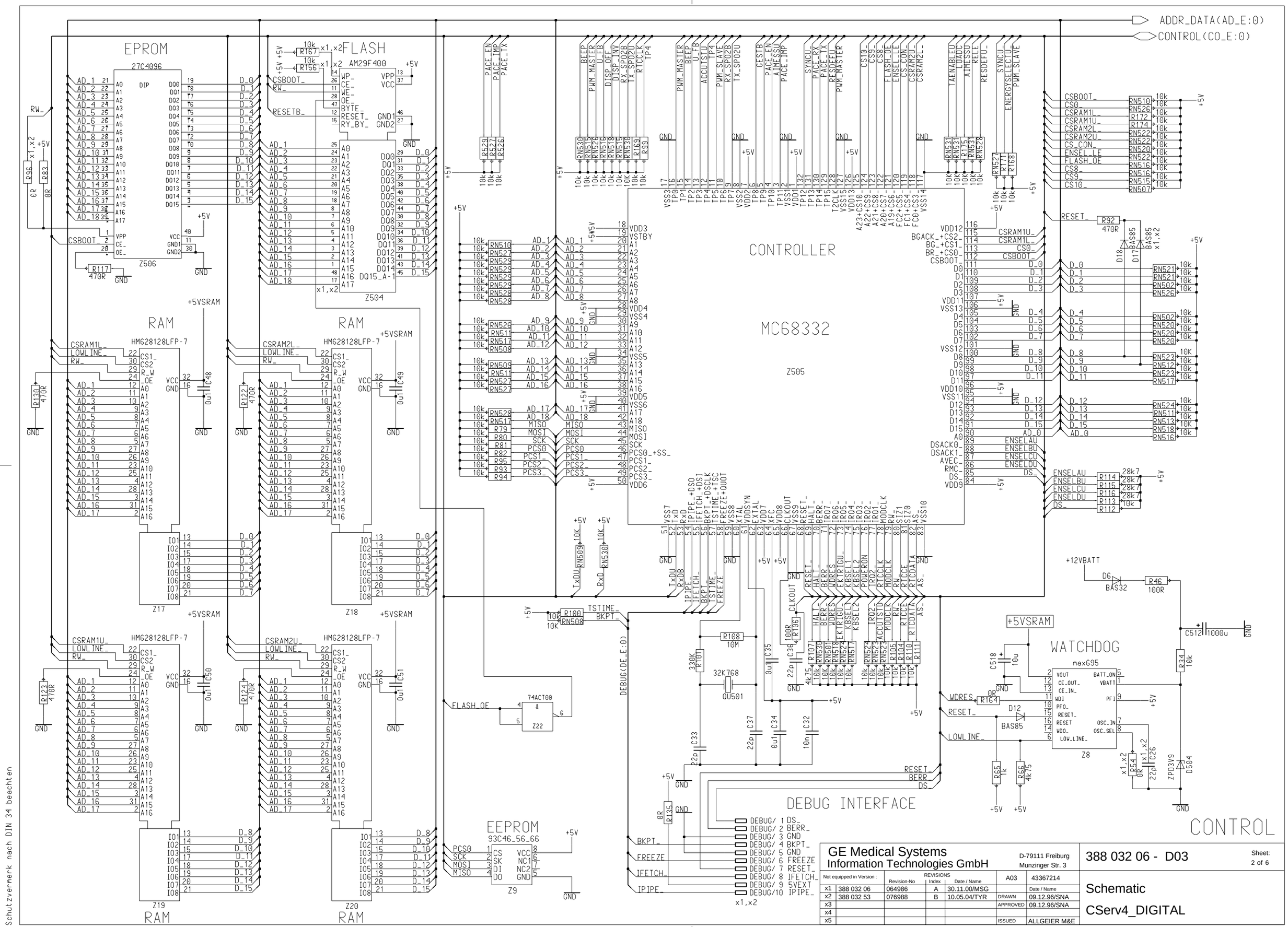

Schutzvermerk nach DIN 34 beachten

GE Medical Systems Information Technologies GmbH				D-79111 Freiburg Munzinger Str. 3		388 032 06 - D03
Not equipped in Version :		REVISIONS			A03	43367214
		Revision-No	Index	Date / Name		Date / Name
x1	388 032 06	064986	A	30.11.00/MSG		
x2	388 032 53	076988	B	10.05.04/TYR	DRAWN	09.12.96/SNA
x3					APPROVED	09.12.96/SNA
x4						
x5					ISSUED	ALLGEIER M&E

Sheet: 2 of 6

Schematic

CServ4_DIGITAL

[1996, 12, 9, 2]

$USER_CAD_A/f67214/design/control

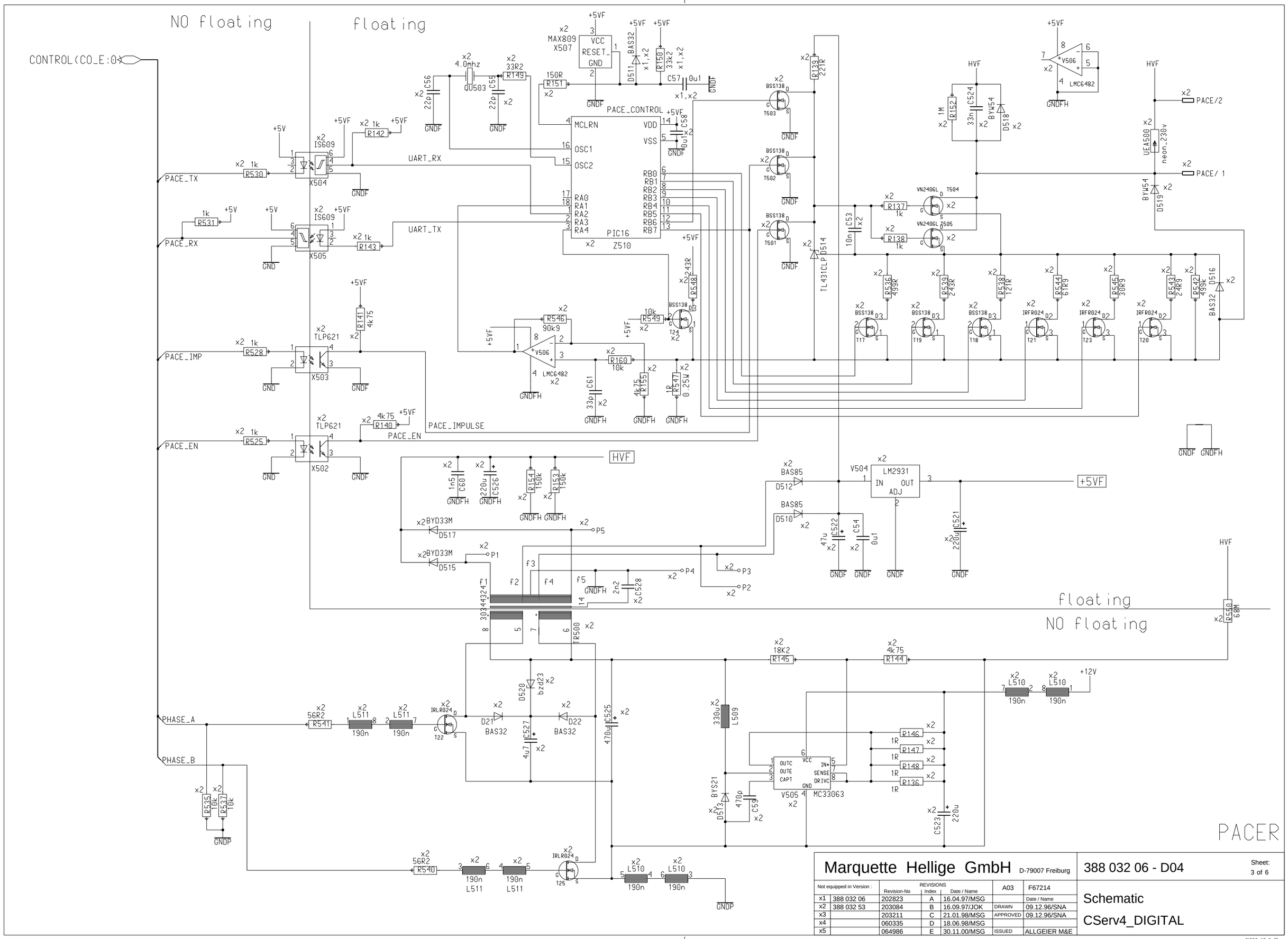

Schutzvermerk nach DIN 34 beachten

Marquette Hellige GmbH D-79007 Freiburg							388 032 06 - D04	Sheet: 3 of 6
Not equipped in Version :		REVISIONS			A03	F67214		
		Revision-No	Index	Date / Name		Date / Name	Schematic	
x1	388 032 06	202823	A	16.04.97/MSG				
x2	388 032 53	203084	B	16.09.97/JOK	DRAWN	09.12.96/SNA	CServ4_DIGITAL	
x3		203211	C	21.01.98/MSG	APPROVED	09.12.96/SNA		
x4		060335	D	18.06.98/MSG				
x5		064986	E	30.11.00/MSG	ISSUED	ALLGEIER M&E		

[1996, 12, 9, 2]
$USER_CAD_A/f67214/design/pacer

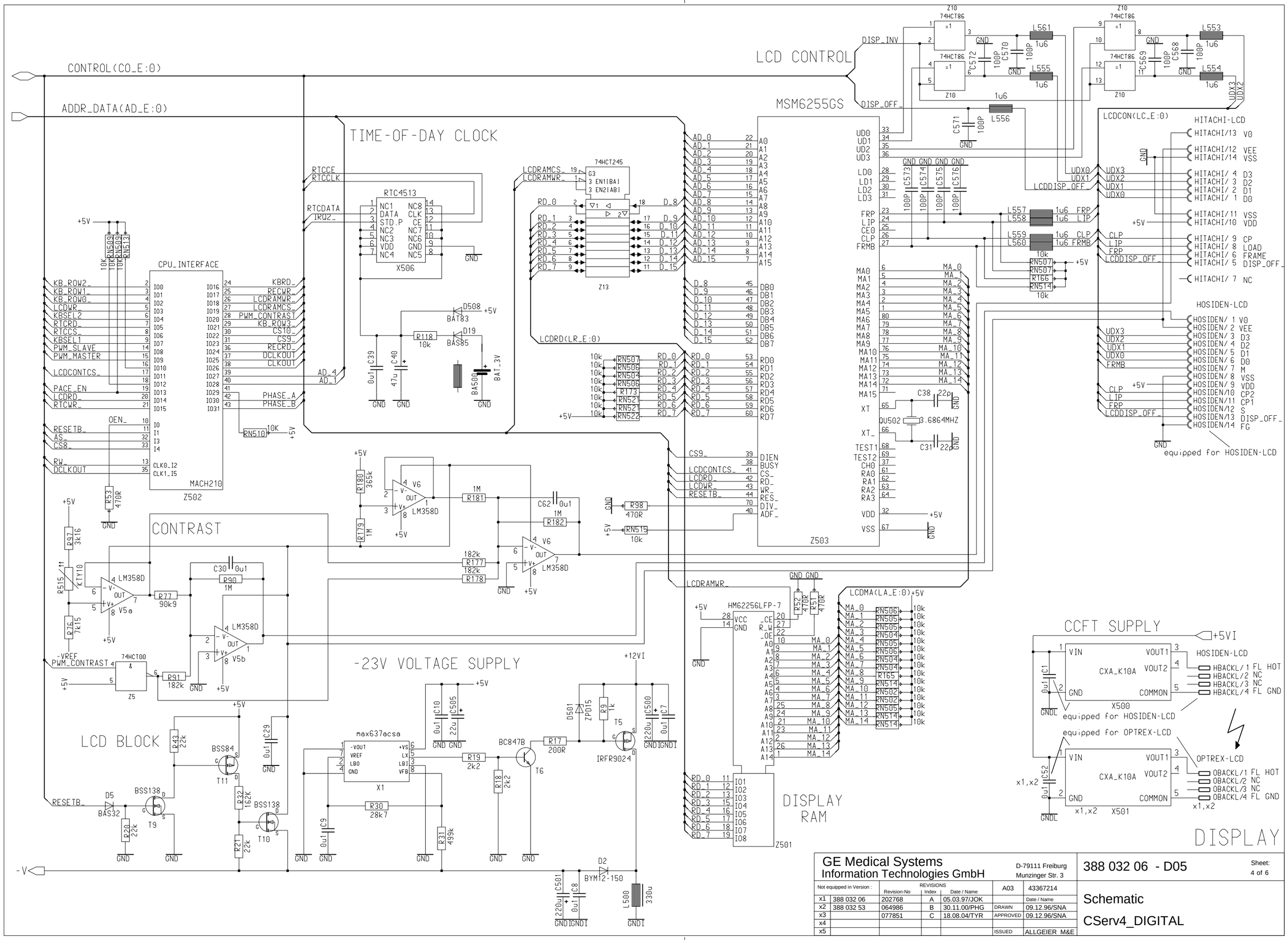

GE Medical Systems Information Technologies GmbH					D-79111 Freiburg Munzinger Str. 3	388 032 06 - D05	Sheet: 4 of 6
Not equipped in Version :	REVISIONS				A03	43367214	
	Revision-No	Index	Date / Name			Date / Name	Schematic
x1	388 032 06	202768	A	05.03.97/JOK			
x2	388 032 53	064986	B	30.11.00/PHG	DRAWN	09.12.96/SNA	CServ4_DIGITAL
x3		077851	C	18.08.04/TYR	APPROVED	09.12.96/SNA	
x4							
x5					ISSUED	ALLGEIER M&E	

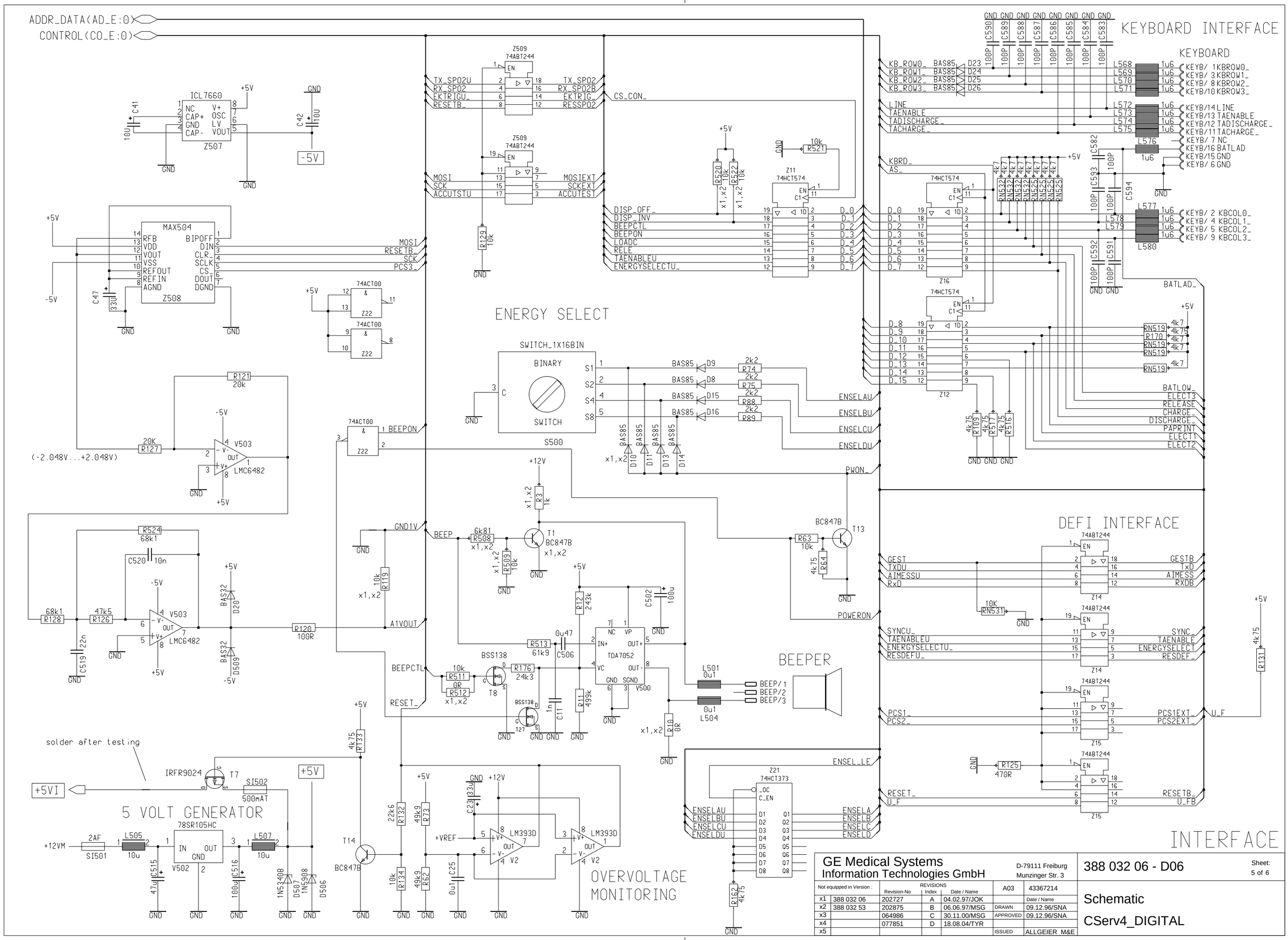

GE Medical Systems
Information Technologies GmbH
D-79111 Freiburg
Munzinger Str. 3

388 032 06 - D06

Sheet: 5 of 6

Schematic
CServ4_DIGITAL

Not equipped in Version :		REVISIONS Revision-No	Index	Date / Name	A03	43367214
x1	388 032 06	202727	A	04.02.97/JOK		Date / Name
x2	388 032 53	202875	B	06.06.97/MSG	DRAWN	09.12.96/SNA
x3		064986	C	30.11.00/MSG	APPROVED	09.12.96/SNA
x4		077851	D	18.08.04/TYR		
x5					ISSUED	ALLGEIER M&E

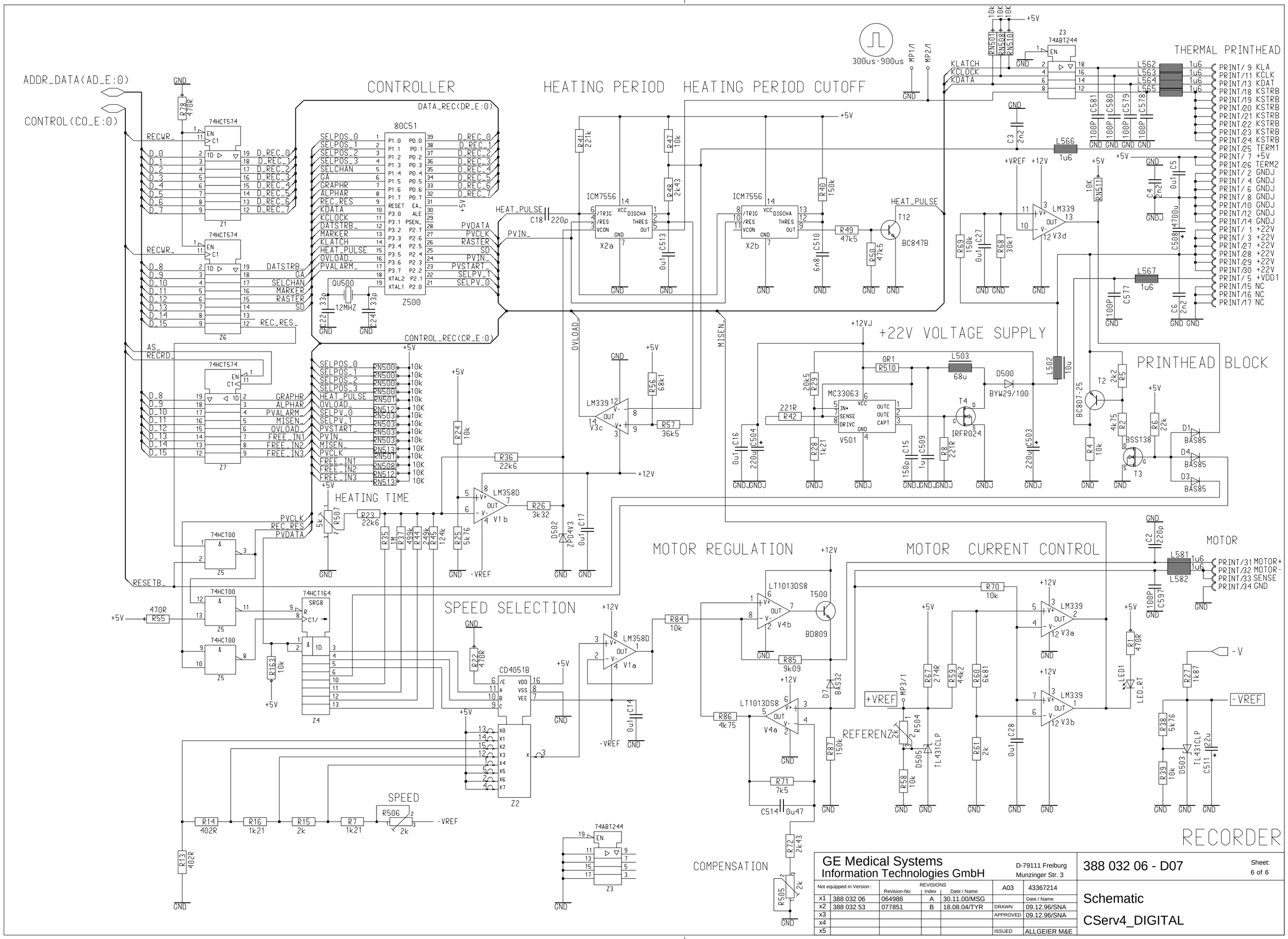
ADDR_DATA(AD_E:0)
CONTROL(CO_E:0)
CONTROLLER
HEATING PERIOD
HEATING PERIOD CUTOFF
THERMAL PRINTHEAD
+22V VOLTAGE SUPPLY
PRINTHEAD BLOCK
HEATING TIME
SPEED SELECTION
MOTOR REGULATION
MOTOR CURRENT CONTROL
MOTOR
REFERENZ
COMPENSATION
SPEED
RECORDER
80C51
ICM7556
LM339
LM358D
LT1013DS8
MC33063
CD4051B
74HCT574
74HCT00
74HCT164
74ABT244
DATA_REC(DR_E:0)
CONTROL_REC(CR_E:0)
HEAT_PULSE
PVIN_
OVLOAD_
MISEN_
PVCLK
REC_RES
PVDATA
RESETB_
+VREF
-VREF
-V
GE Medical Systems
Information Technologies GmbH
D-79111 Freiburg
Munzinger Str. 3
388 032 06 - D07
Sheet: 6 of 6
Schematic
CServ4_DIGITAL
Not equipped in Version :
REVISIONS
Revision-No
Index
Date / Name
x1 388 032 06 064986 A 30.11.00/MSG
x2 388 032 53 077851 B 18.08.04/TYR
x3
x4
x5
A03 43367214
DRAWN 09.12.96/SNA
APPROVED 09.12.96/SNA
ISSUED ALLGEIER M&E
Schutzvermerk nach DIN 34 beachten

BT-AS = 309
BT-BS = 213
LOET-AS =1639
LOET-BS = 663

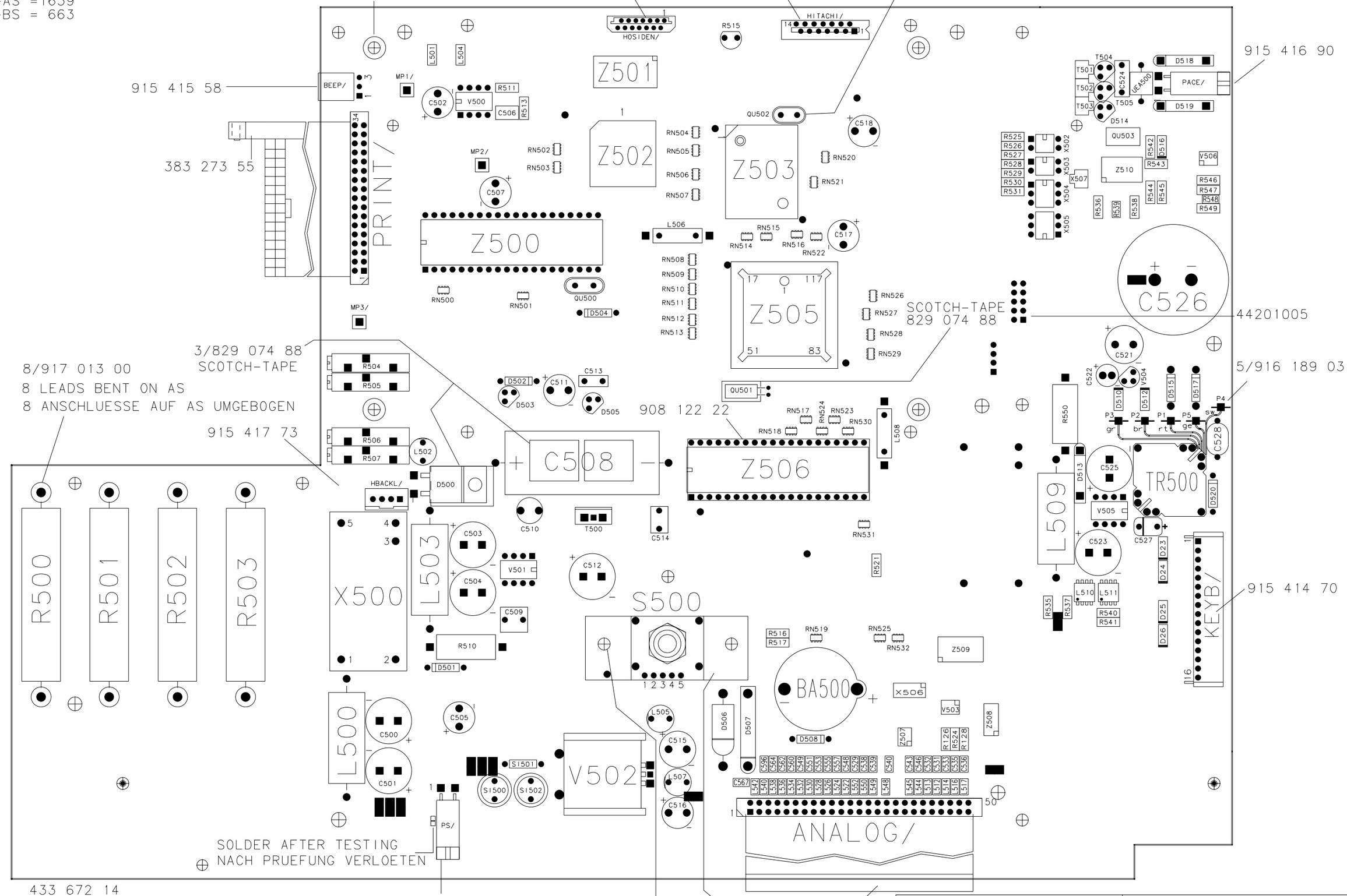

Schutzvermerk nach DIN 34 beachten.

GE Medical Systems Information Technologies GmbH	D-79111 Freiburg Munzinger Str.3	38803206-D08 1 / 2

REVISIONS

Revision-No	Index	Date/Name		43367214 Date/Name
203084	E	16.09.97/MSG		
060335	F	18.06.98/MSG	Drawn	18.07.96/MNS
064986	G	30.11.00/MSG	Approved	18.07.96/JOK
076988	H	10.05.04/TYR		
077851	I	27.08.04/TYR	Issued	M&E/ALLGEIER

REF DWG
CSERV4_DIGITAL

BARCODE

403 114 82 ON/AUF AS

TIN-FREE
ZINNFREI

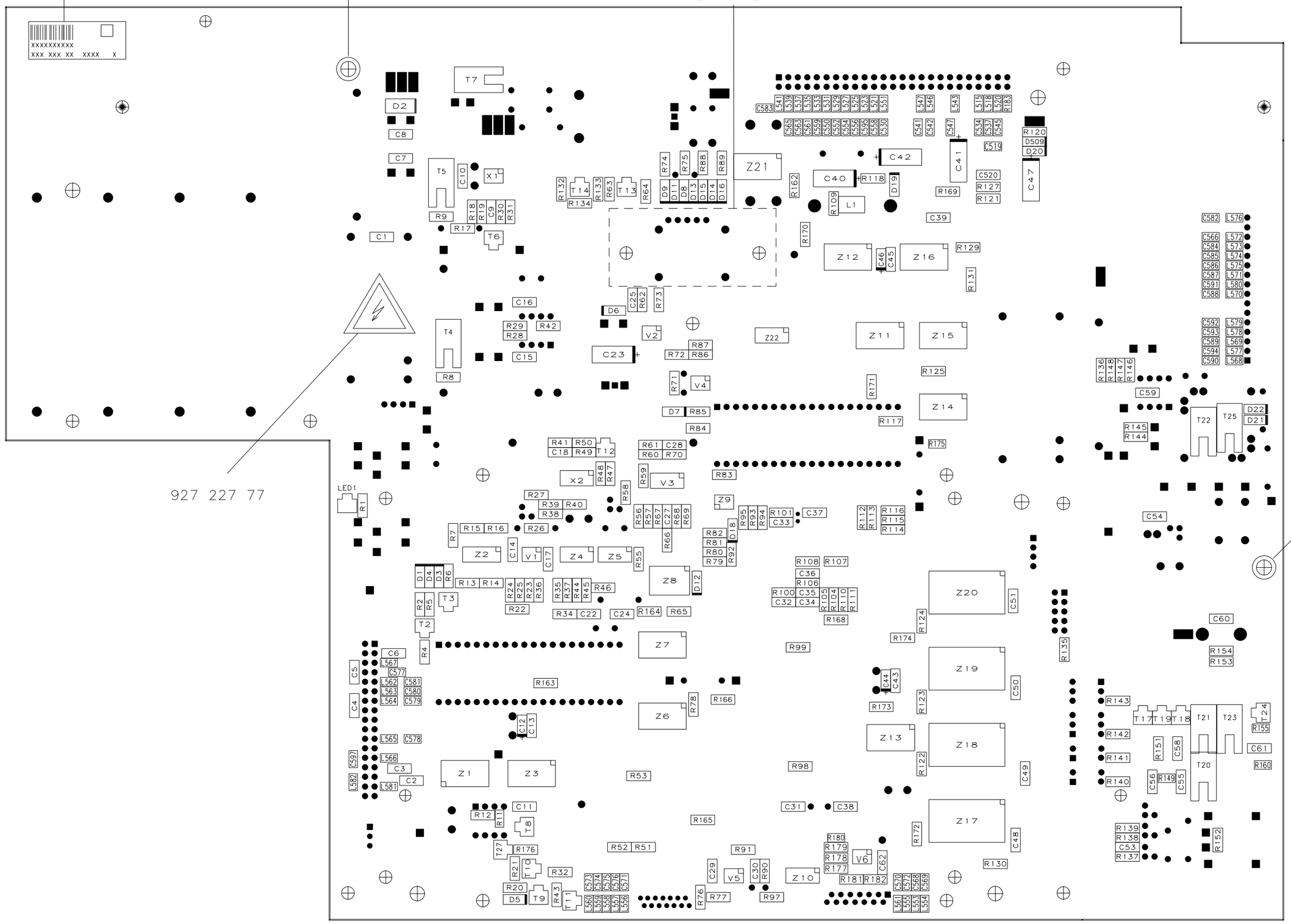

927 227 77

403 114 82 ON/AUF AS

433 672 14

GLUING
KLEBEN

Schutzvermerk nach DIN 34 beachten.

GE Medical Systems Information Technologies GmbH	D-79111 Freiburg Munzinger Str.3		38803206-D09 2 / 2

REVISIONS

Revision-No	Index	Date/Name		43367214
202662/727	C	04.02.97/JOK		Date/Name
203084	D	16.09.97/JOK	Drawn	18.07.96/MNS
060335	E	18.06.98/MSG	Approved	18.07.96/JOK
064986	F	30.11.00/MSG		
077851	G	07.10.04/TYR	Issued	M&E/ALLGEIER

REF DWG
CSERV4_DIGITAL

BT-AS = 309
BT-BS = 214
LOET-AS =1639
LOET-BS = 663

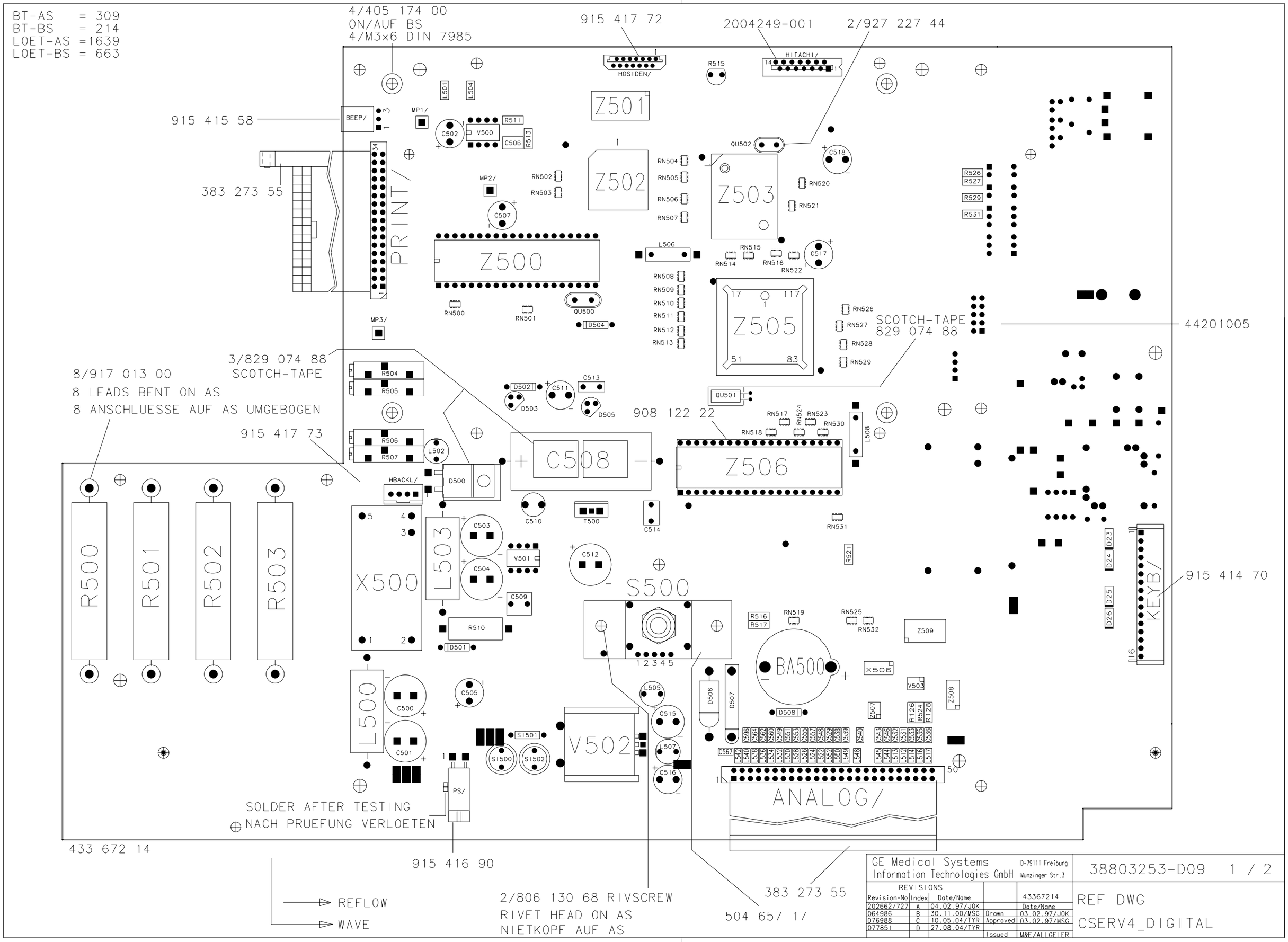

Schutzvermerk nach DIN 34 beachten.

GE Medical Systems Information Technologies GmbH			D-79111 Freiburg Munzinger Str.3	38803253-D09 1 / 2
REVISIONS				43367214
Revision-No	Index	Date/Name		Date/Name
202662/727	A	04.02.97/JOK		
064986	B	30.11.00/MSG	Drawn	03.02.97/JOK
076988	C	10.05.04/TYR	Approved	03.02.97/MSG
077851	D	27.08.04/TYR		
			Issued	M&E/ALLGEIER

REF DWG
CSERV4_DIGITAL

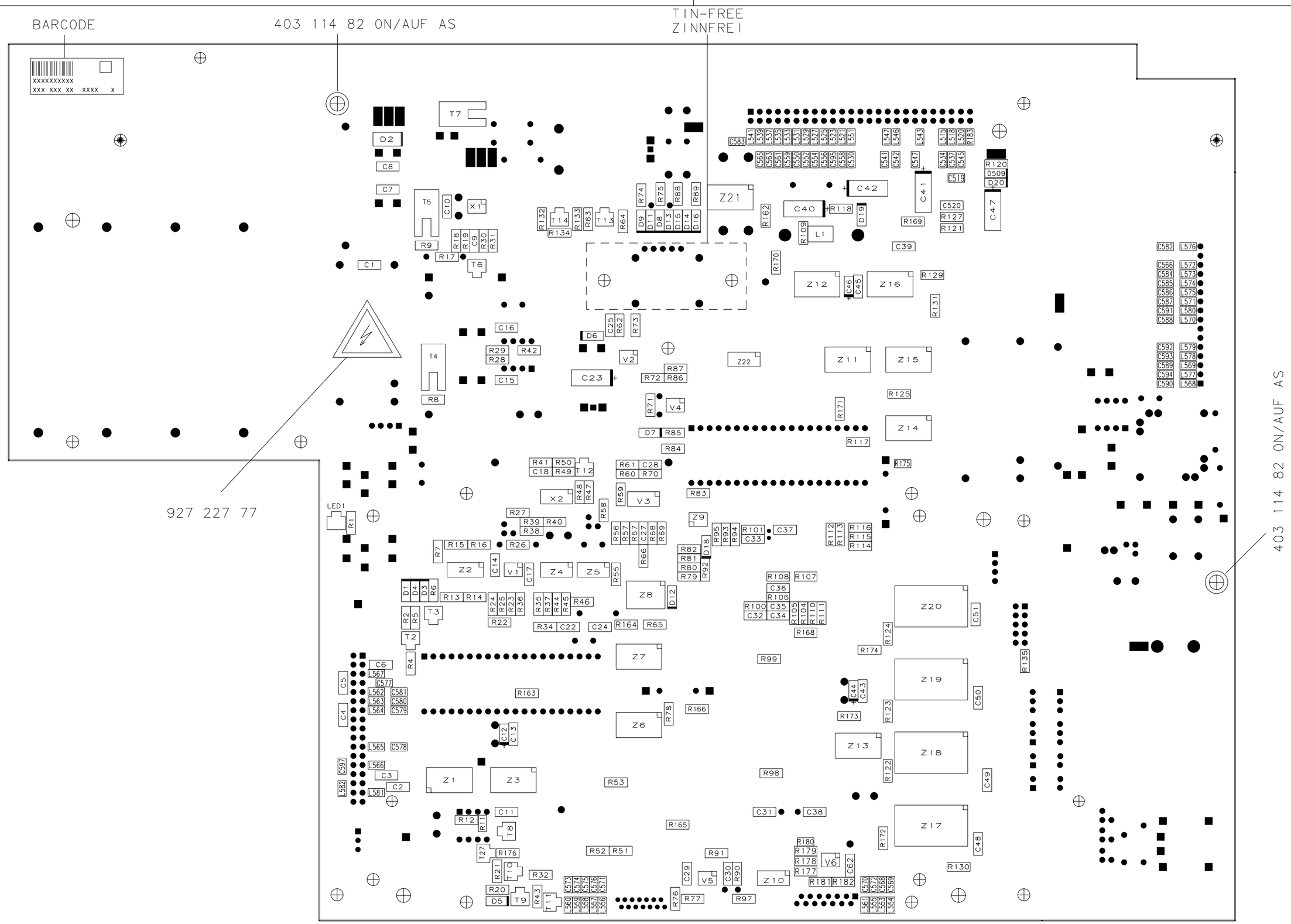

GLUING
KLEBEN

Schutzvermerk nach DIN 34 beachten.

GE Medical Systems Information Technologies GmbH			D-79111 Freiburg Munzinger Str.3		38803253-D10 2 / 2
REVISIONS					REF DWG
Revision-No	Index	Date/Name		43367214	
202662/727	A	04.02.97/JOK		Date/Name	CSERV4_DIGITAL
064986	B	30.11.00/MSG	Drawn	03.02.97/JOK	
077851	C	07.10.04/TYR	Approved	03.02.97/MSG	
			Issued	M&E/ALLGEIER	

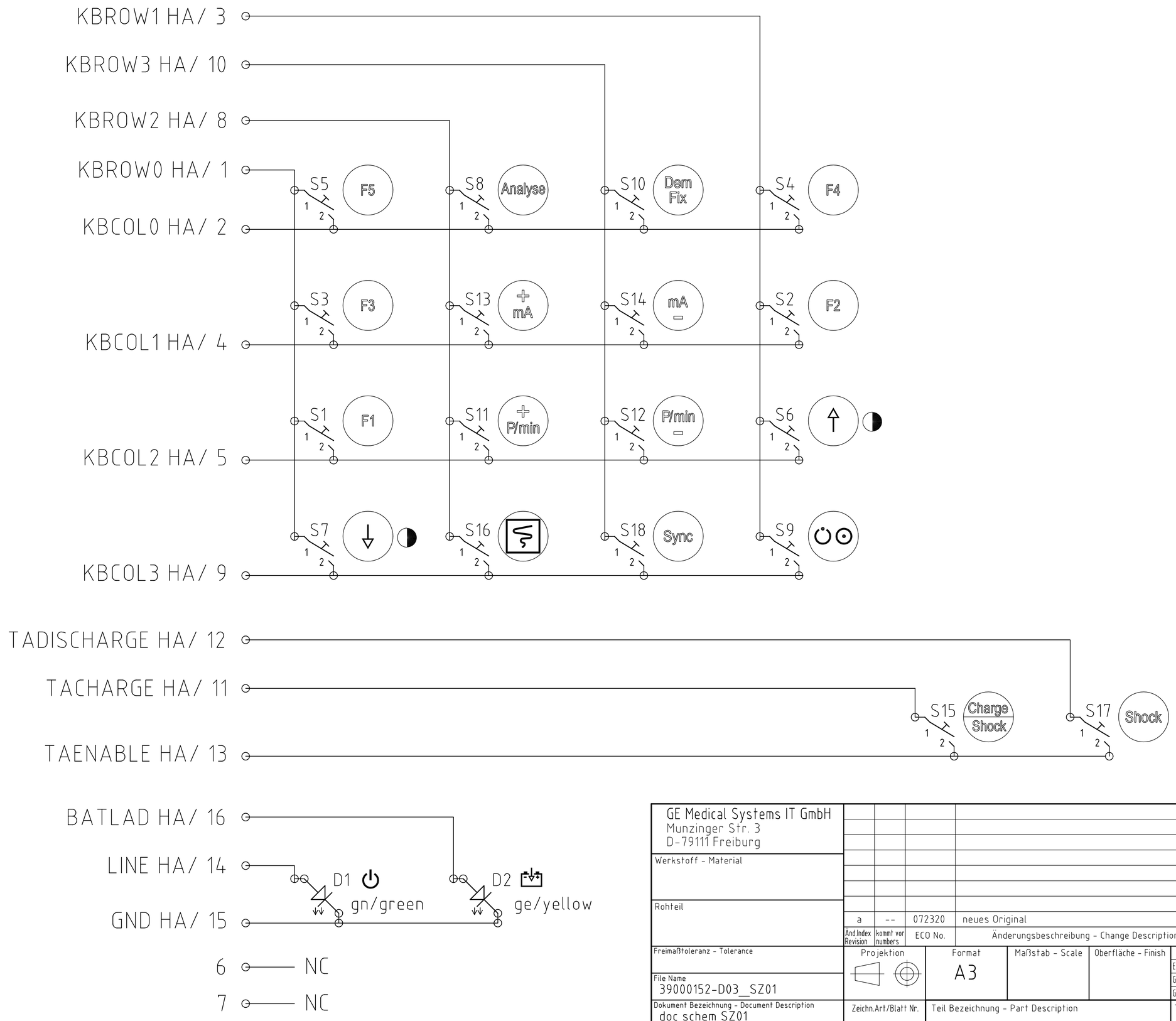

GE Medical Systems IT GmbH
Munzinger Str. 3
D-79111 Freiburg

Werkstoff - Material

Rohteil

Freimaßtoleranz - Tolerance

File Name
39000152-D03_SZ01

Dokument Bezeichnung - Document Description
doc schem SZ01

Dokument Nr. - Document No.
39000152-D03

Änd.Index Revision	kommt vor numbers	ECO No.	Änderungsbeschreibung - Change Description	Datum - Date	Name
a	--	072320	neues Original	05.11.02	B.Deimel

Projektion	Format	Maßstab - Scale	Oberfläche - Finish		Datum - Date	Name
	A3			Entworfen-Drawn	05.11.2002	B.Deimel
				Geprüft-Approved	05.11.2002	S.Allgeier
				Geprüft-Approved		

Zeichn.Art/Blatt Nr.
SZ/01

Teil Bezeichnung - Part Description
Kybd membrane CardioServ

Teil Nr. - Part Number
390 001 52

Copyright GE Medical Systems IT
Schutzvermerk nach DIN 34 beachten

CE 0459

GE Medical Systems
Information Technologies, Inc.
8200 West Tower Avenue
Milwaukee, WI 53223 USA
Tel: +1 414 355 5000
1 800 558 7044 (US only)
1 800 668 0732 (Canada only)
Fax: +1 414 355 3790

www.gehealthcare.com

EC REP
GE Medical Systems
Information Technologies GmbH
Munzinger Straße 5
79111 Freiburg
GERMANY
Tel: +49 761 4543-0
Fax: +49 761 4543-233

Asia Headquarters
GE (China) Co.,Ltd.
No1 Huatuo Road,
Zhangjiang Hi-Tech Park Pudong,
Shanghai, P.R.China 201203
Tel: +86 21 38777888
Fax: +86 21 38777402