Bel-Halo

LED DENTAL LIGHT

Model AL-920Q

INSTALLATION
and
OPERATION INSTRUCTIONS

⚠ IMPORTANT

After installation is completed, check all the bolts, screws and fastners to confirm that they are securely fastened.

Belmont®

TABLE OF CONTENTS

Page

[1] MAJOR PARTS IDENTIFICATION ---------- 1

[2] SPECIFICATIONS ---------- 1

[3] CLASSIFICATION ---------- 1

[4] WIRING DIAGRAM ---------- 2

[5] DIMENSIONS ---------- 3

[6] INSTALLATION

6-1. Attach the light assembly to the light pole ---------- 3

6-2. Feed the light assembly wire harness through the swing arm -------- 3

6-3. Attach the switch box ---------- 4

6-4. Attaching wire harness from light assembly and power supply box on the switch box ---------- 4

6-5. Attach the switch box cover ---------- 5

6-6. Wiring between Switch box and power supply box ---------- 5

6-7. Wiring between LED light control PCB and chair control PCB ---------- 7

[7] OPERATION

7-1. Mode selection switch ---------- 8

7-2. Operation of the touch-less switch ---------- 8

7-3. Selection of intensity for normal treatment mode ---------- 8

[8] ADJUSTMENT OF THE BALANCE ARM

8-1. Adjustment of the tension of the balance arm ---------- 9

8-2 Adjustment of the angle of the light head ---------- 9

[9] CLEANING, MAINTENANCE PARTS & DISPOSAL ---------- 10

[10] MAINTENANCE AND INSPECTION ---------- 11

Intended Use of the Product

This product is intended for the exclusive use for diagnoses, treatments and relative procedures of dentistry, and must be operated or handled by the qualified dentists or by dental staffs under the supervision of the dentist. Such dentists or dental staffs should instruct and/or assist the patients to approach to and leave from the product. Patients should not be allowed to operate or handle the product unless he/she is so instructed.

⚠ WARNING

Operation of a dental light under Electro Magnetic Interferences.

This equipment may malfunction by electromagnetic interferences.
Do not install dental light close to the equipment that generates electromagnetic interference
(i.e. communication equipment, elevator)
Do not use the device that creates interference (i.e. cellular phone) near this equipment.

Do not use electric surgical knife or laser knife with dental light.
Light may turns on/off by itself due to malfunction of a sensor caused by electromagnetic interferences.

Symbols

⚠	Caution It means “caution, warnings, or possibility to danger”.		Manufacturer

Environmental condition for Operation

Temperature : 41~104F (5 ~ 40°C)
Humidity : 10 ~ 80%
Pressure : 8.7~15.4 psi (600 ~ 1060 hpa)

Environmental condition for Storage

Temperature : -4~158F (-20 ~ 70°C)
Humidity : 10 ~ 80%
Pressure : 8.7~15.4 psi (600 ~ 1060 hpa)

Environmental condition for Transportation

Temperature : -4~158F (-20 ~ 70°C)
Humidity : 10 ~ 80%
Pressure : 8.7~15.4 psi (600 ~ 1060 hpa)

⚠ WARNING

- To avoid the risk of electric shock, this equipment must only be connected to supply mains with protective earth.
- Position a light head by holding light handle(s).
- Installation and service work should be conducted by an authorized installation/service personnel only.

⚠ WARNING The followings are prohibited

- To modify this equipment.
- To use the equipment under any failure condition.
- To use the equipment without doing the daily and periodical check-up.
- To wipe the plastic covers with any disinfectant or detergent that contains organic solvent.

Precautions for Installation

- Keep the equipment away from water.
- Keep in circumstances safe from influence by temperature, humidity, wind, sun light, air containing salts and minerals.
- Care about stability such as inclination, vibration and impact, including handling and transportation.
- Do not keep the equipment in a place where chemicals are or where gas is emitted.
- During lifting and unpacking of the light, make sure to hold only the designated parts.
- Do not drop or hit the light.
- Do not connect to power supply other than AC120V 60HZ.
- Ground light properly prior to turning power on.
- When the installation process has been completed, verify that all the mechanical and electrical functions are working properly.
- Thick gloves are highly recommended at unpacking.
- Do not modify this equipment.

⚠ CAUTION

Before use

- Check connection of switches and make sure that the device functions properly.
- Make sure that grounding wire is connected.
- Make sure that cables are properly and perfectly connected.

During use

- Do not use the light longer than required for examination or treatment.
- Always watch the patient and the equipment to make sure nothing is wrong.
- If anything wrong is observed with the equipment or the patient, take a proper action, such as stopping the use of equipment as well as keeping the patient in safe.
- Keep an eye on the patient not to touch the equipment.

After use

- Turn off the light.
- Clean the equipment and get it ready for use.

⚠ CAUTION

Do not spray liquids directly onto light surfaces. In order to prevent damage to electrical components and systems, do not apply excess cleaning solution onto light surfaces.

NOTE

Warranty does not cover damage to equipment caused by disinfectant solutions

[1] MAJOR PARTS IDENTIFICATION

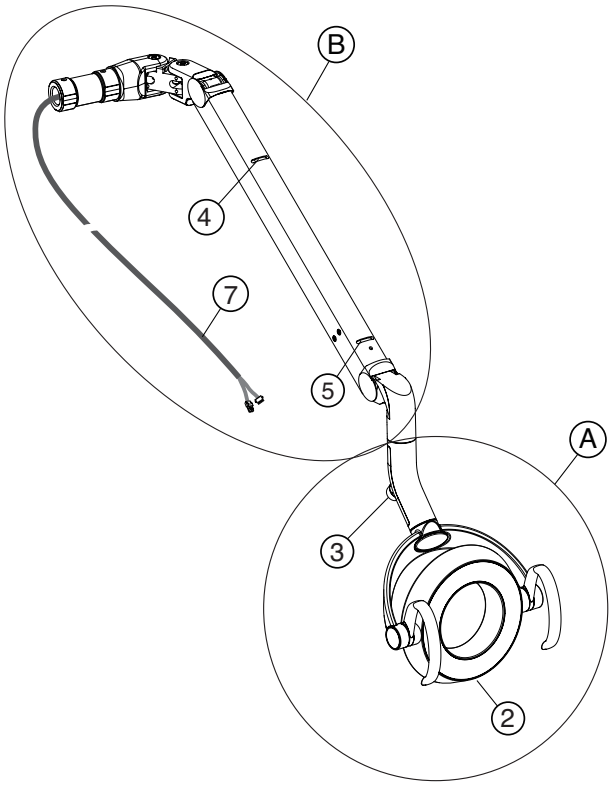

(A) LED light head assembly

(B) Balance arm assembly

1. Mode selection switch
2. Touchless sensor switch
3. Intensity control volume
4. Slot A for Adjusting Tension of Balance Arm
5. Slot B for Adjusting Angle of Head
6. Power supply box assembly
7. Light assembly wire harness
8. Power supply box wire harness

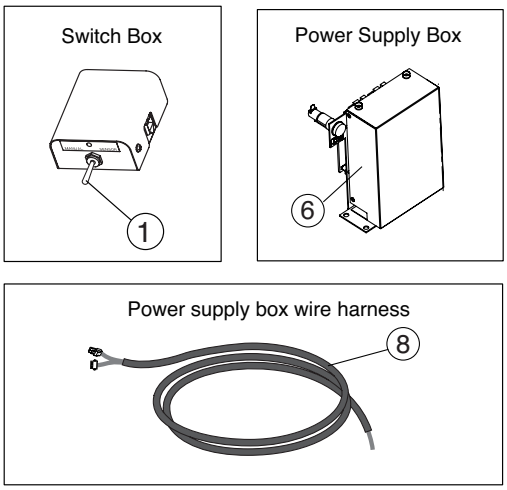

[2] SPECIFICATIONS

1. Focal Distance..... 25.6" (650 mm)
2. Color Temperature ..... 5000° Kelvin
3. Light Intensity
   Regular Operation Mode ..... 4000 Lux / 370 FTC ~ 32000 Lux / 2970 FTC
   Composite Mode ..... 5500 Lux / 510FTC
4. Light Pattern..... 3.2" x 5.5" at 25.6"
5. Power Requirement..... AC. 120V / 60 Hz / 0.43A

[3] CLASSIFICATION

a. Protection against electric shock : Class I Equipment.

b. Equipment not suitable for use in the presence of a flammable anesthetic mixture with air or with oxygen or nitrous oxide.

[4] WIRING DIAGRAM

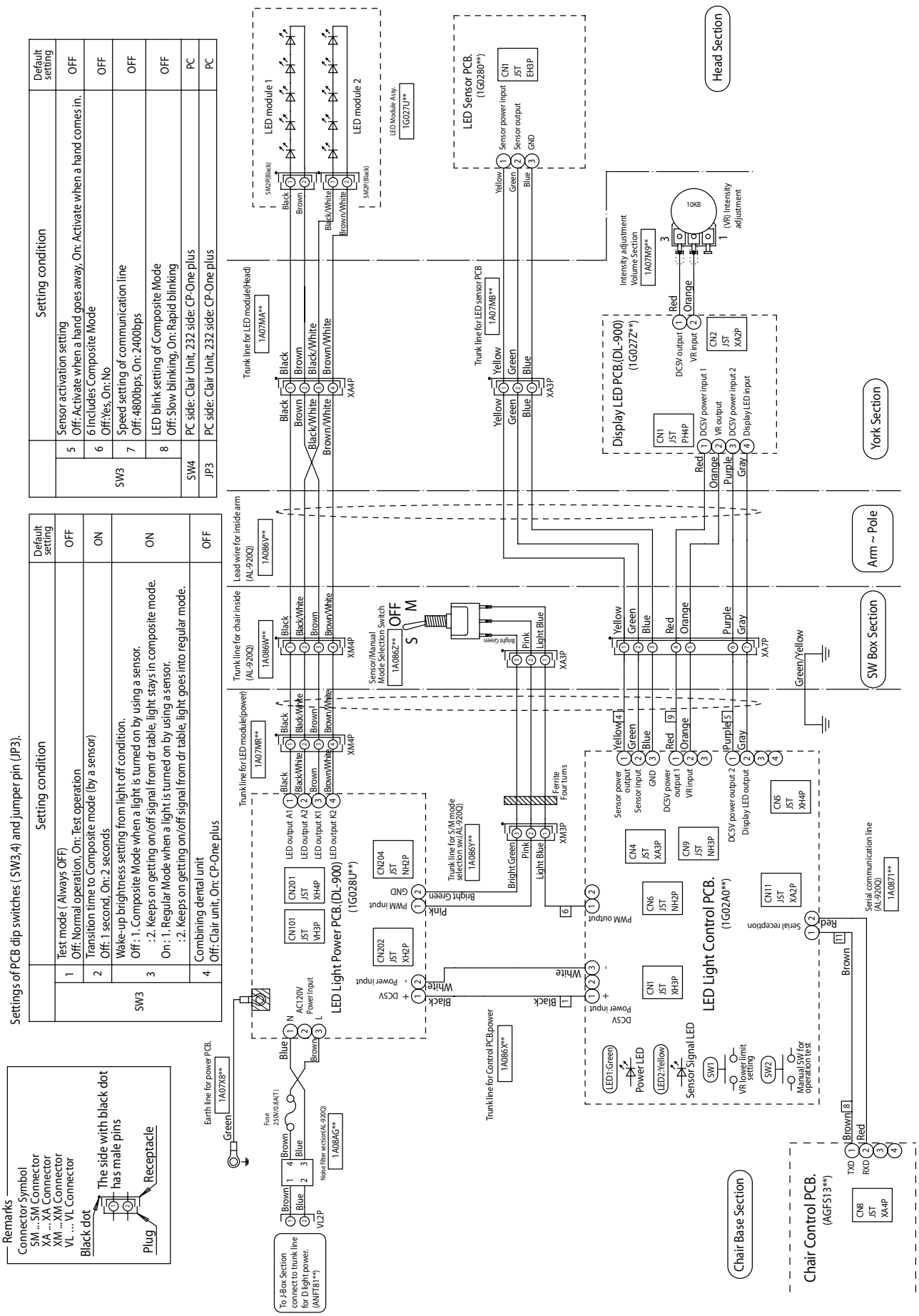

[5] DIMENSIONS

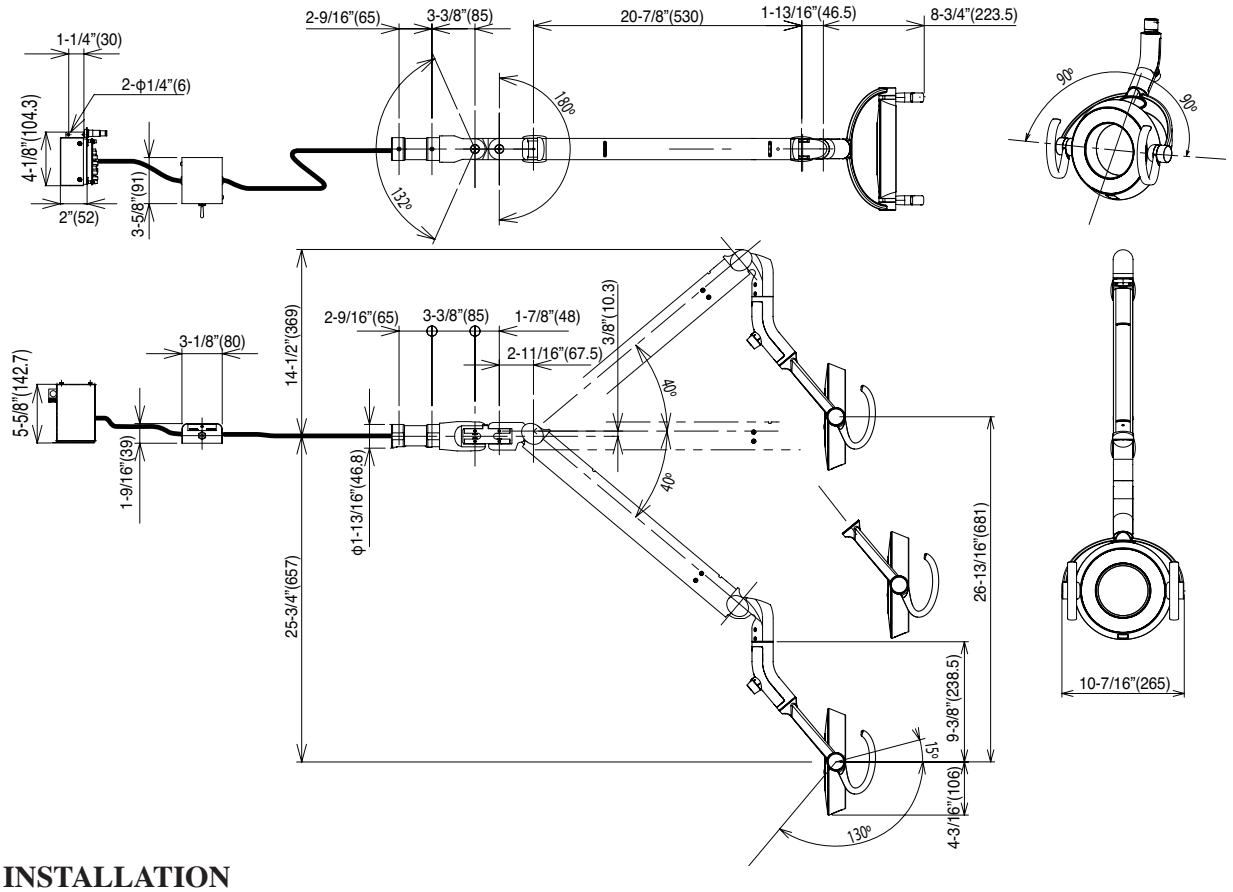

[6] INSTALLATION

6-1. Attach the light assembly to the light pole

Feed the wire harness coming from the balance arm joint through the light pole. Insert the balance arm joint of the light into the light pole. Fasten with two M6 x 12mm screws.

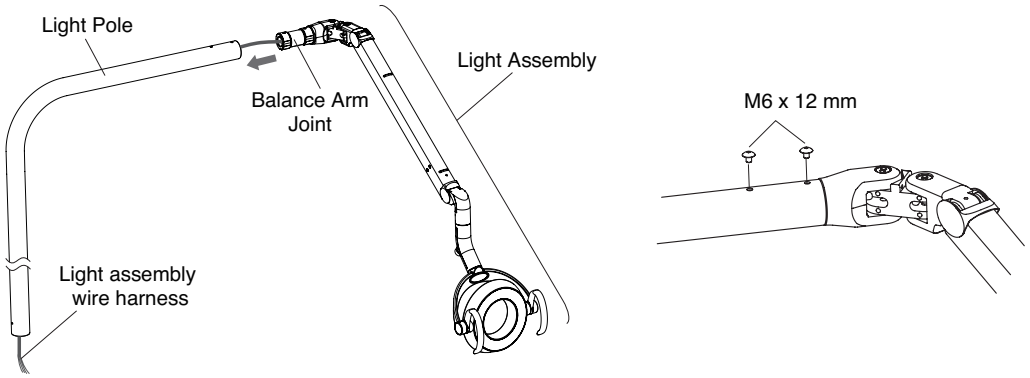

6-2. Feed the light assembly wire harness through the swing arm

Feed the light assembly wire harness through the swing arm and pull the end of the harness from the lower end of the swing arm.

Mount the light assembly onto swing arm.

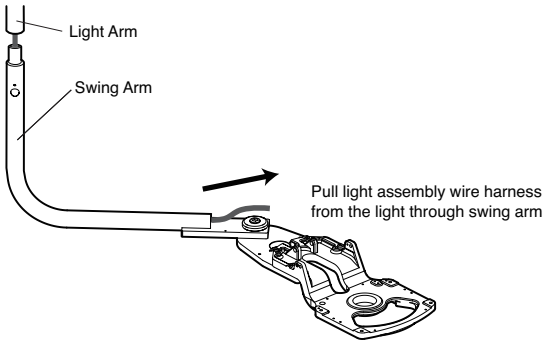

6-3. Attach the switch box

Attach the switch box onto the swing arm with two screws M4 x 8mm.

Fix the Green/Yellow line from power supply box wire harness together with same screw as shown in figure.

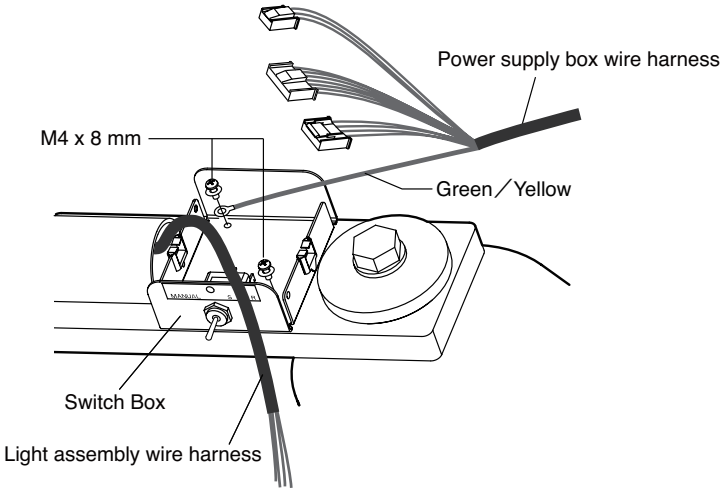

6-4. Attaching wire harness from light assembly and power supply box on the switch box.

(1) Attach the connectors of the light assembly wire harness and power supply box wire harness.

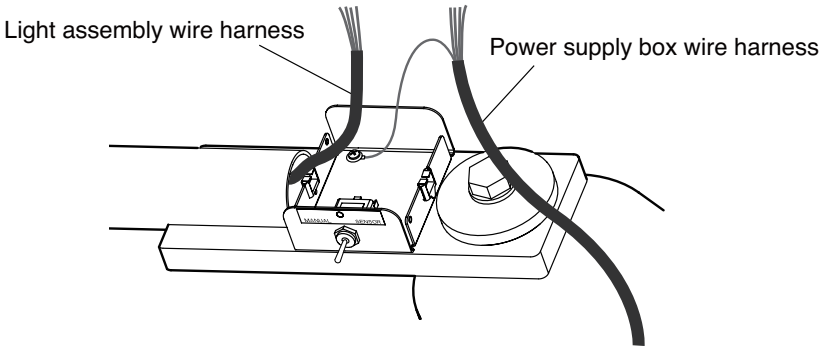

(2) As illustrated below, place the wire harness inside the guide. The part with the cable tie should be inside the box. Lead all the wires underneath the switch, and connect the connectors (3 pins) from the power supply box wire harness and the mode selection switch. See [4] Wiring diagrams.

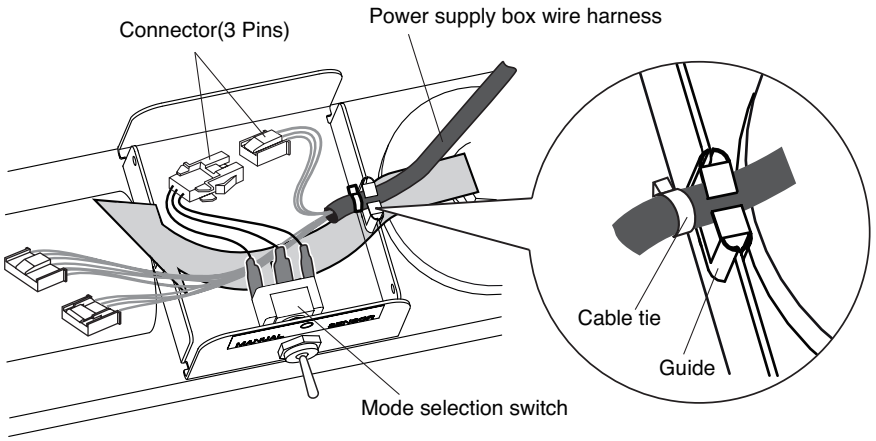

(3) As illustrated below, place the Light Assembly Wire Harness inside the cable guide. The part with the cable tie should be inside the box. Make sure that the Light Assembly Wire Harness should be above that from the power supply box.

Connect the connectors (7 pins) of the wire harnesses.

Also connect connectors (4 pins) of the wire harnesses.

See [4] Wiring diagrams.

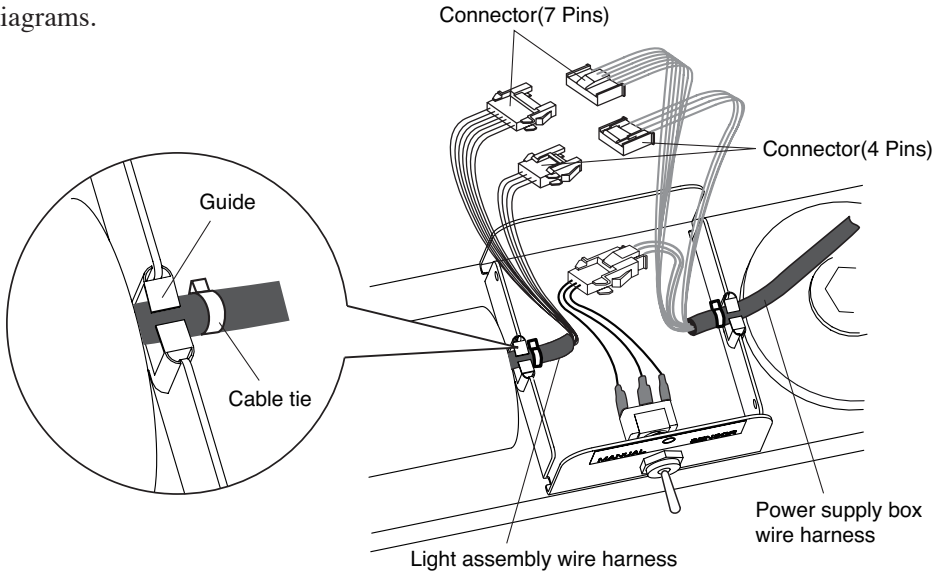

6-5. Attach the switch box cover

Put all the wires inside the box. Place the switch box cover on the switch box and fix it with two M4 x 6mm screws.

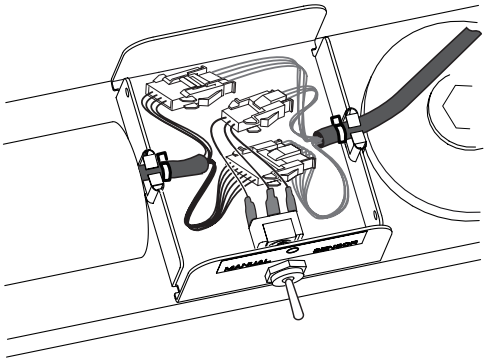

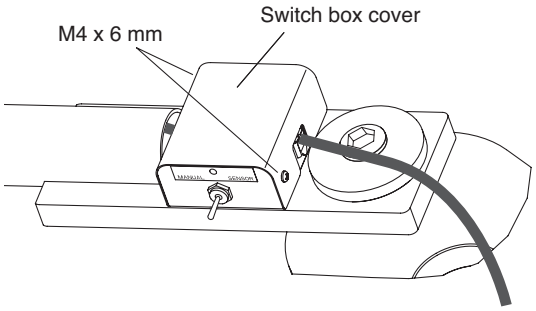

6-6. Wiring between switch box and power supply box assembly.

(1) Insert the wire harness down through the hole of the swing arm bracket.

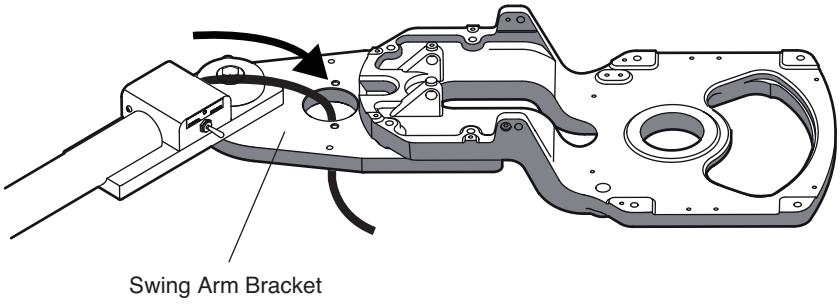

(2) Feed the wire harness through the flange parts as described below.

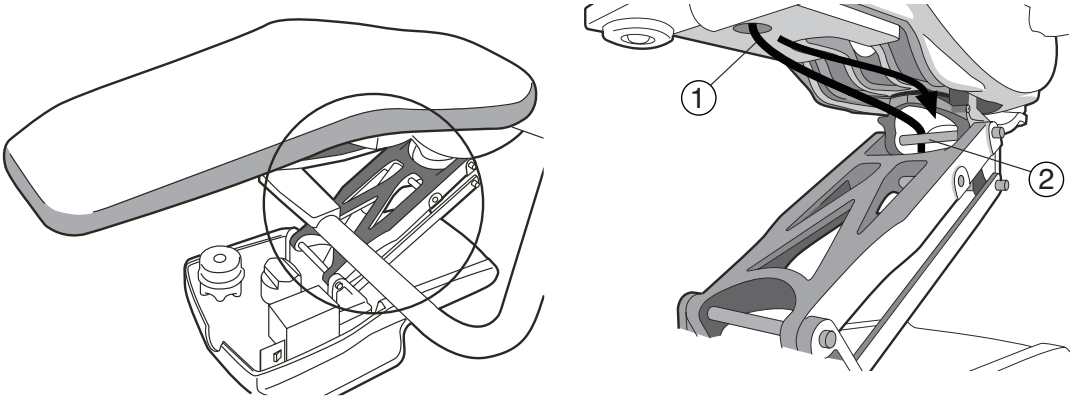

(3) Attach the power supply box by the motor pump of the chair with two M5 x 12mm screws.

Also fix the Green line from power supply box together with same screw.

Fix the Green/Yellow line from power supply box wire harness to junction box with M5 x 12mm screw.

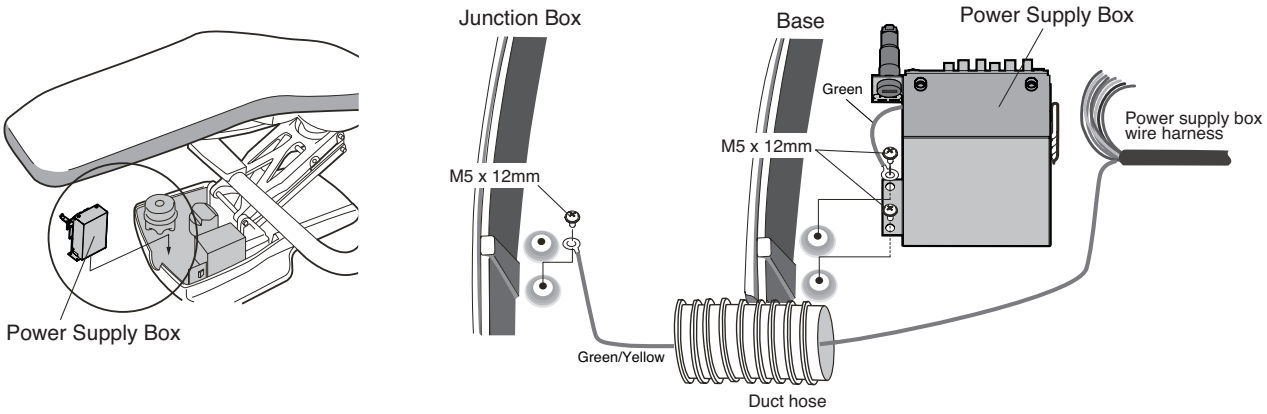

(4) Attach the connectors onto the LED light control PCB of the power supply box.

A : Connect the connectors (3 pins, 3pins and 4 pins) from power supply box wire harness to LED light control PCB.

B : Connect the connectors (3pins and 4pins)

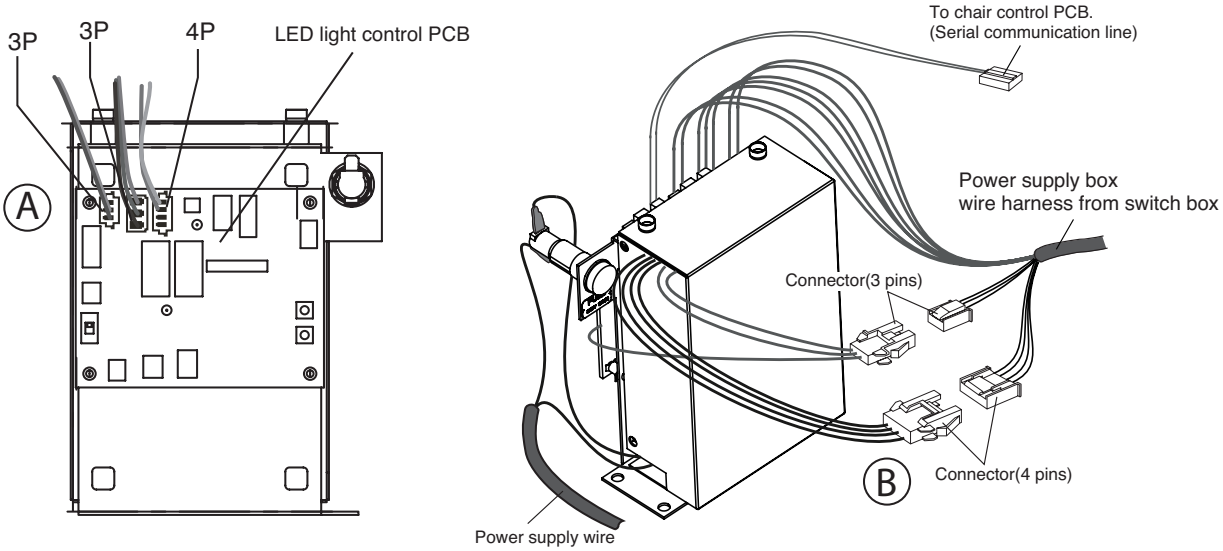

(5) Connect the power supply wire from power supply box to the connector on the metallic box inside the junction box.

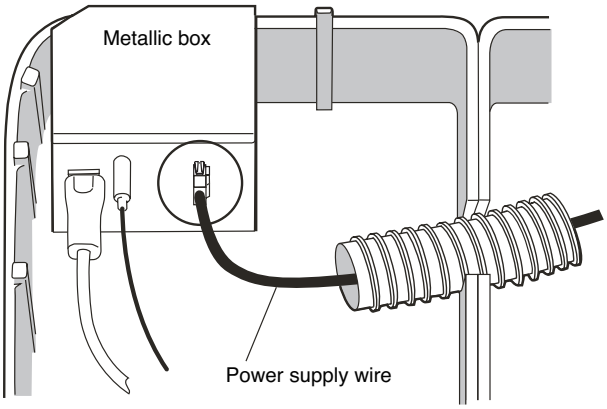

6-7. Wiring between LED light control PCB and chair control PCB.

(1) Remove 2 screws for chair control pcb box.

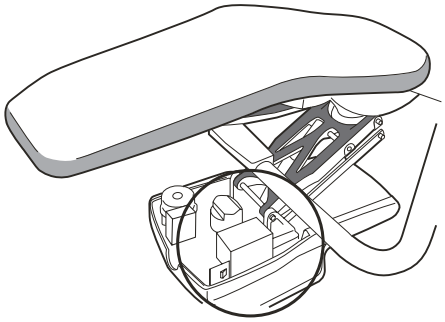

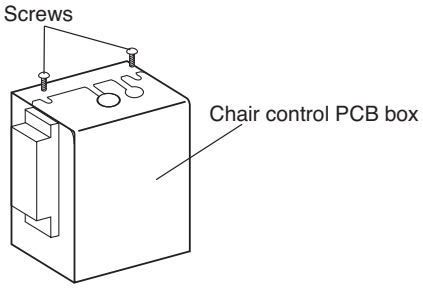

(2) Open the lid to access to the chair control PC board.

Remove the connected wire harness for AL-820 from CN8.

Replace with the wire harness for AL-920Q that comes out from LED light power supply box.

Close the lid and fix with 2 screws.

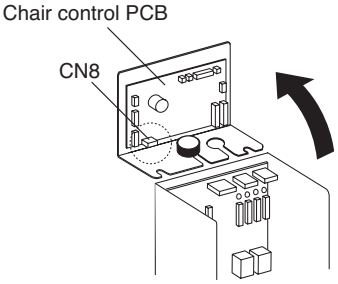

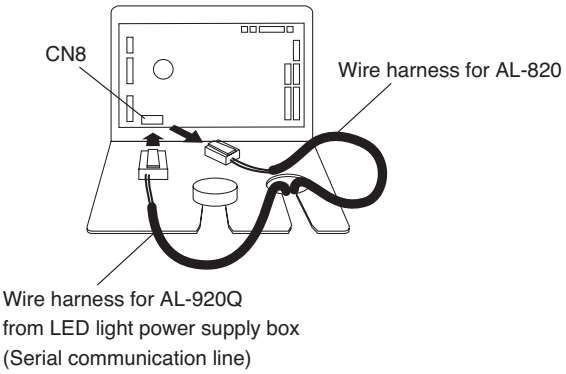

[7] OPERATION

7-1. Mode Selection switch

Select the desired - sensor or manual mode with the switch on the box.

Sensor : Touch-less ON/OFF and composite mode.

Manual : Manual mode (ON only).

◯ : OFF

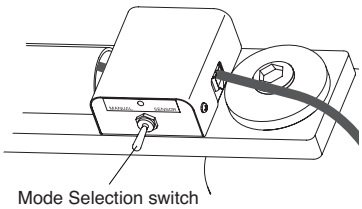

7-2. Operation of the touch-less switch

The light can be turned on/off with a touch-less sensor switch. The intensities are regular operation mode and composite mode.

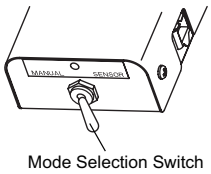

7-2-1. Confirmation of mode selection switch

Make sure that the mode selection switch is at Sensor mode.

7-2-2. Turning on/off

The touch-less switch has a sensor. The sensor activates within the distance of 2-1/2" from the surface. Let your hand pass by within 2-1/2" from the touch-less sensor to turn on the light.

Let your hand pass by again to turn off.

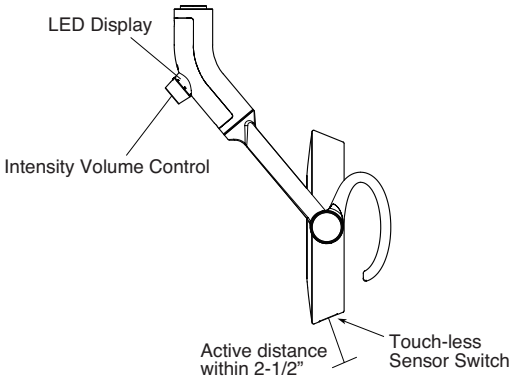

7-2-3. Switching to the composite mode

During normal treatment mode, while the light is on, place and hold your hand within 2-1/2" from the touch-less sensor for 2 seconds. The light intensity will be automatically reduced to the composite mode which has intensity of 5500 lux. LED display under yoke blinks green on at composite mode. To switch back to the normal treatment mode, place your hand by the touch-less sensor 2 seconds again.

	INTENSITY	LED Display
COMPOSITE Mode	5500 Lux	Blink

Note: by placing your hand for 2 seconds when the light is off. The light does not lit in the composite mode, but lit in normal treatment mode. Please make sure that the light is on before lighting in composite mode.

7-3. Selection of intensity for normal treatment mode

LED display under yoke turns green on at regular operation mode.

By turning intensity control volume, you can adjust intensity steplessly between 4000 - 32000 Lux.

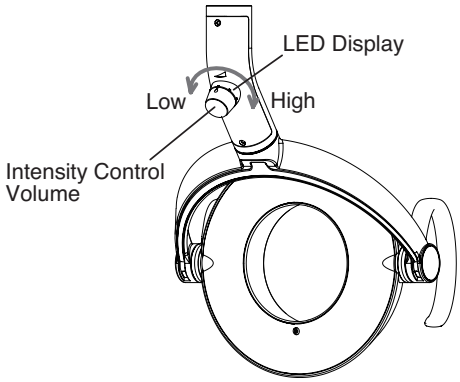

Note: If light intensity is set below 510 FTC and in composite mode, light will Flash briefly when exiting composite mode. This is a normal condition indicating return to standard mode.

[8] ADJUSTING TENSION of BALANCE ARM

8-1. Adjustment of the tension of the balance arm

Position the angle of the balance arm so the tension adjustment nut becomes visible just under slot A.

Turn the nut and adjust the tension with the adjustment bar supplied with the light.

Direction of rotation of the nut

When the light head tends to go up, turn the nut to + direction.

When the light head tends to go down, turn the nut to – direction.

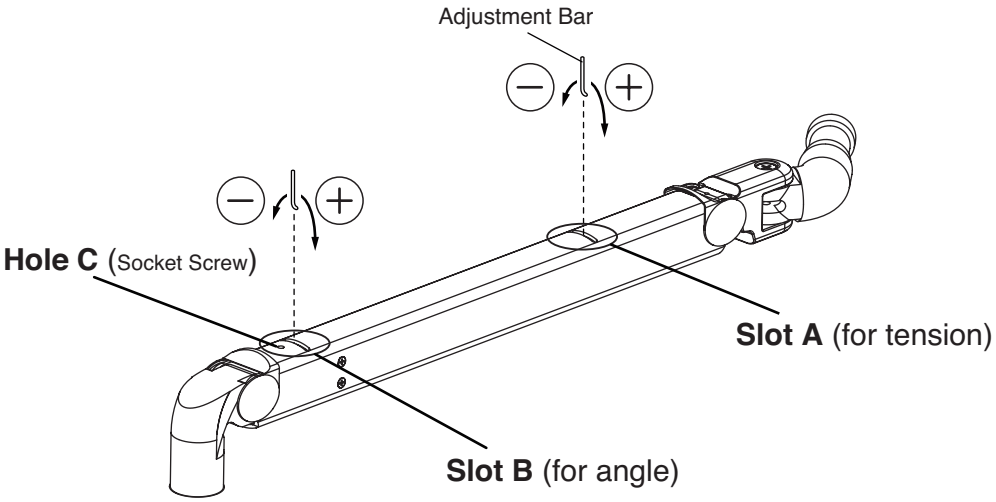

8-2 Adjustment of the angle of the light head

1) Use a 2mm hex key wrench to loosen socket screw in front of Hole C.
2) Position the angle of the balance arm so the head angle adjustment nut becomes visible just under the slot B. Turn the nut and adjust the tension with the adjustment bar supplied with the light.

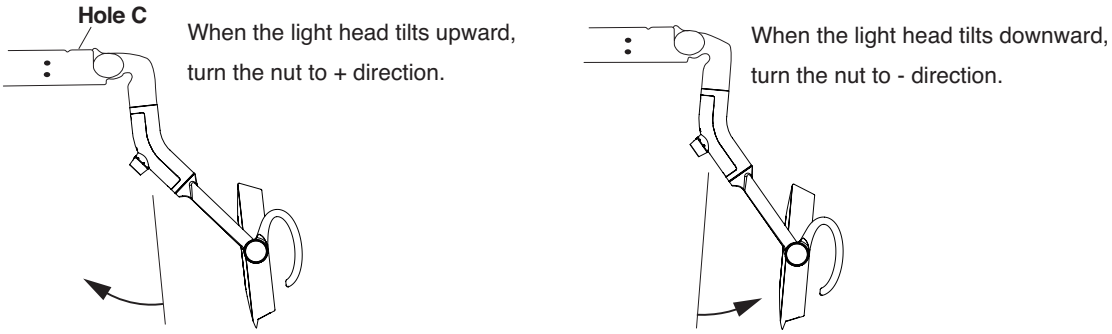

3) After adjustment is done, re-tighten the socket screw.

Note : Unless this socket screw is re-tightened, the angle of the head will be changed during use.

[9] CLEANING,MAINTENANCE PARTS & DISPOSAL

9-1. Cleaning

⚠CAUTION

Allow light to cool prior to cleaning.

Use a soft cloth or cotton only to gently clean surfaces. Use of other materials can scratch and damage surfaces. Covers can be cleaned with a soft cloth or cotton moistened with alcohol. The reflector can be cleaned with a soft and dry cloth or cotton with extreme care.

9-2. Maintenance Parts

Fuse are maintenance parts.

Period for repair and supplying parts
We will supply parts of the equipment for 10 years, after the manufacturing of this equipment is discontinued.

9-3. Lifetime

Provided that the recommended and authorized care and maintenance are correctly performed, the working
lifetime of this equipment is 10 years from the date of initial shipment from the manufacturer.

9-4. Disposal

This is not an infectious device, but prior to disposal make sure that no parts of the device is infected. Follow the federal, state and local regulations for disposal.

[10] MAINTENANCE AND INSPECTION

Guide for daily maintenance and inspection (Maintenance and inspection by user)

Management of maintenance and inspection of medical equipment should be implemented by the user (medical inspection). In case the user does not implement such management, it is permitted that such management is outsourced to a qualified entity such as a medical equipment repair company.
For safe use of this product, it is necessary that inspection should be conducted in the specified frequency on the items described below.

No.	Item	Frequency	Inspection Method and diagnosis	Influence if inspection is not conducted	Maintenance required in case of nonconformity
1	Appearance of Lens Cover	Before start	Check deformation, scratches by eyes	Deterioration of optical performance	Change a lens cover.
2	Light switch	Before start	Set Sensor/Manual switch to Manual. Confirms the light turns on.	Light doesn't function.	Replace a light bulb.
3	Touchless sensor	Before start	Set Sensor/Manual switch to Sensor. Confirms the light turns on.	Light doesn't function.	Clean the sensor surface.
4	Intensity switch	Before start	Change intensity.	It may cause the difficulty at dental practice.	Turn off the light. Call customer service.
5	Functionality of Balance Arm	Before start	Swing the balance arm up/down. Swing the balance arm right/left. Make sure the balance arm stops and holds its position.	Light head doesn't stay at the desired position.	Adjust the tension of the balance arm. Follow instructions on page 9.
6	Vertical rotation of the Light head	Before start	Rotate the light head up/down. Make sure the light head stops and holds its position.	Light head doesn't stay at the desired position.	Adjust the tension of vertical rotation. Follow instructions on page 9.
7	Light head angle	Before start	Confirms the light head is vertically aligned.	Light head doesn't stay at the desired position.	Adjust the angle of the light head.
8	Light head rotation	Before start	Rotate the light head right/left. Make sure the light rotate 160° to each direction.	Light head rotates freely. This may cause the snapping of a wire.	Call customer service.
9	Care exterior	Before start	Chemical and dirt on the product exterior must be cleaned.	Discoloration and deterioration to the exterior, and corrosion and rusting to metallic components may arise.	Executes wiping in accordance with "Cleaning Instructions"
10	Other 1	Once every week	Make sure that no abnormal noise occurs when the product is operated.	Light may not function right.	Turn off the light. Call customer service.
11	Other 2		If the light has not been used for a long time, make sure the light functions correctly and safely.		If the light malfunctions, call customer service.

NOTE

BELMONT EQUIPMENT, Division of Takara Belmont USA, Inc.
101 Belmont Drive Somerset, New Jersey 08873 U.S.A. TEL.:(732) 469-5000 / (800) 223-1192 Fax.:(732)356-1035

TAKARA CO, CANADA LTD.
2076 S. Sheridan Way, Mississauga, Ont., L5J2M4, Can. TEL.:(905) 822-2755 Fax.:(905)822-6203

TAKARA BELMONT CORPORATION (Manufacturer)
1-1, 2-Chome, Higashi-shinsaibashi,Chuo-ku,Osaka,Japan TEL.: 81-6-6213-5945 FAX.: 81-6-6212-3680

Book No. 1E02K9B0
Printed in Japan 2011-06