SERVICE MANUAL

Advanta™ Bed

From Hill-Rom

errata
man168ra-e1

Product No. P1600

For Parts or Technical Assistance
USA (800) 445-3720 Canada (800) 267-2337
International: Contact your distributor.

man168ra

Advanta™ Bed Service Manual

Revisions

Revision Letter	Pages Affected	Date
Original Issue		April, 2000
A	All	May, 2001

man168ra

Second Edition

First Printing 2000

Printed in the USA

The information contained in this manual is subject to change without notice. Hill-Rom makes no commitment to update or keep current, the information contained in this manual.

The only product warranty intended by Hill-Rom is the express, written warranty accompanying the bill of sale to the original purchaser. Hill-Rom

makes no other warranty, express or implied, and in particular, makes no warranty of merchantability or fitness for a particular purpose.

Additional copies of this manual can be obtained from Hill-Rom.

To order additional copies of this service manual, call (800) 445-3720, and place a parts order for part number man168ra.

NOTES:

Table of Contents

Chapter 5: Parts List

1

Chapter 1
Introduction

Chapter Contents

NOTES:

Purpose

This manual provides requirements for the Advanta™ Bed normal operation and maintenance. It also includes parts lists (in chapter 5) for ordering replacement components.

Audience

This manual is intended for use by only facility-authorized personnel. Failure to observe this restriction can result in severe injury to people and serious damage to equipment.

Organization

This manual contains seven chapters.

Chapter 1: Introduction

In addition to a brief description of this service manual, chapter 1 also provides a product overview.

Chapter 2: Troubleshooting Procedures

Repair analysis procedures are contained in this chapter. These procedures are used to gather information, identify the maintenance need, and verify the effectiveness of the repair.

Chapter 3: Theory of Operation

This chapter describes the application of the mechanical, electrical, and pneumatic systems employed in this product. It also contains the hardware and software theories of operation.

Chapter 4: Removal, Replacement, and Adjustment Procedures

Chapter 4 contains the detailed maintenance procedures determined necessary in chapter 2.

Chapter 5: Parts List

This chapter contains the warranty, part-ordering procedure, and illustrated parts lists.

Chapter 6: General Procedures

Cleaning, preventive maintenance, and other general procedures are described in this chapter.

Chapter 7: Accessories

A list of additional products, that can be used in conjunction with the Advanta™ Bed, is available in chapter 7. Installation procedures for these accessories are also included.

Typographical Conventions

This manual contains different typefaces and icons designed to improve readability and increase understanding of its content. Note the following examples:

- Standard text—used for regular information.
- **Boldface text**—emphasizes a word or phrase.
- **NOTE:**—sets apart special information or important instruction clarification.
- The symbol below highlights a WARNING or CAUTION:

Figure 1-1. Warning and Caution

  – A WARNING identifies situations or actions that may affect patient or user safety. Disregarding a warning could result in patient or user injury.
  – A CAUTION points out special procedures or precautions that personnel must follow to avoid equipment damage.

- The symbol below highlights a CAUGHT HAZARD WARNING:

Figure 1-2. Caught Hazard Warning

- The symbol below highlights a CHEMICAL HAZARD WARNING:

Figure 1-3. Chemical Hazard Warning

- The symbol below highlights an ELECTRICAL SHOCK HAZARD WARNING:

Figure 1-4. Electrical Shock Hazard Warning

Introduction

Overview

The Advanta™ Bed is a four-motor, retractable-type bed with multiple articulation features (see “Bed Positions” on page 1-17). A variety of options are available, including nurse call, patient scale, a Patient Position Monitoring (PPM) system, night light, air system, and siderail controls. See “Features” on page 1-8 for additional information concerning some of the Advanta™ Bed features.

Operating Precautions

Before operating the Advanta™ Bed, be sure that you have read and understood in detail the contents of this manual. It is important that you read and strictly adhere to the “Safety Tips” on page 1-40.

Any reference to a side of the bed is from the patient’s view lying in the bed.

For additional operating precautions for the Advanta™ Bed and its accessories, refer to the *Advanta™ Bed User Manual*.

Features

Head Section Inclination

The head section of the Advanta™ Bed can be raised or lowered by utilizing the switches on the head end siderails. Switches are on both the patient sides and caregiver sides of the siderails. Pressing and holding the *head up* or *head down* switch causes the head section to move up or down accordingly. Once the switch is released, the head section stops moving. The head section can be inclined up to 65°. Head angle indicators located on the caregiver (outer) sides of the siderails display the amount of inclination in degrees.

Automatic Contour

The automatic contour feature raises the knee section automatically when the head section is raised. This increases the occupant’s comfort and helps keep the occupant from sliding toward the foot end of the bed when the head up function is activated.

When the *head up* switch is activated from the patient (inner) sides of the siderails, the automatic contour feature is activated. The automatic contour function raises the knee section up to 15° as the head section is raised. **The automatic contour can only be activated from the patient siderail control panels, and not from the caregiver siderail control panels.**

To disable the automatic contour function, press and hold the *knee down* switch as the *head up* switch is activated. The automatic contour feature can also be disabled by activating the knee lockout on the footboard control panel.

Articulating Frame

The Advanta™ Bed is a retractable-type bed, which means that the articulating frame moves towards the head end of the bed as the head section is elevated. This has the effect of keeping the patient in the same relative position with regard to objects outside the bed, such as shelves or night stands. This allows the occupant to continue accessing these fixtures the same as when the bed was in the flat position.

Knee Section Inclination

The knee section of the Advanta™ Bed can be raised or lowered by utilizing the switches on the head end siderails. Switches are on both the patient sides and caregiver sides of the siderails. Pressing and holding the *knee up* or *knee down* switch causes the knee section to move up or down accordingly. Once the switch is released, the knee section stops moving. The knee section can be inclined up to 35°.

Foot Section Inclination

The foot section may be elevated by raising it manually and engaging the support arm (vascular positioning bar). This does not affect the operation of other bed functions.

Hilow Sleeping Surface

The Advanta™ Bed can be raised or lowered up to 13.25" (33.66 cm) by utilizing the switches on the head end siderails or the footboard control panel. On the siderails, the *bed up/down* switches are available only on the caregiver (outer) sides. The low position is for general use and to assist with patient egress, while the high position is for patient examinations.

Trendelenburg/Reverse Trendelenburg

The Advanta™ Bed can be placed into a maximum of 11° Trendelenburg or Reverse Trendelenburg positions by utilizing the switches on the footboard control panel. The Trendelenburg and Reverse Trendelenburg features can be activated at any bed height, and the bed will adjust its height if necessary.

The Trendelenburg angle indicator, located on the footboard control panel, displays the amount of Trendelenburg or Reverse Trendelenburg in degrees and inches.

If the head or knee sections are articulated, they will automatically return to the flat position when the Trendelenburg or Reverse Trendelenburg functions are activated.

To return the bed to the flat position from the Trendelenburg or Reverse Trendelenburg positions, activate either the *bed up* or the *bed down* switch.

Chair Position

The Advanta™ Bed can be placed in a recliner chair position by utilizing the *chair in* switch on the footboard control panel. When activated, the chair position function simultaneously puts the bed into the low hilow position, and raises the *head up* function in the automatic contour mode (raising the knee section also). After this is achieved, the Reverse Trendelenburg function is activated to complete the chair position of the bed.

For large patients or patients at risk for skin breakdown due to pressure ulceration, briefly activating the *chair out* switch after achieving the chair position will tilt the bed back some more.

CPR Release

The CPR Release enables the caregiver to save valuable time in an emergency. When activated, the CPR Release quickly lowers the head section of the bed to the flat position, enabling emergency procedures to be performed without unnecessary loss of time. After the head section is down, the knee section also comes down to the flat position. On beds equipped with an integrated air surface, the auto firm function engages automatically when the CPR Release is activated. This provides a firm surface that supports a CPR board.

If electrical power is lost, the auto firm function does not engage; the air mattress maintains the same level of air pressure that it had at the time of power loss. CPR board effectiveness could be reduced in this circumstance.

After the CPR Release has been activated and the entire sleep surface is in the flat position, the bed automatically resets itself for normal operation. The head motor takes 30 seconds to resume its normal operation.

To operate the CPR Release:

Activate the CPR Release by pushing one of the red switches (A) on the side of the release handle (B), and pulling out on the handle (see figure 1-5 on page 1-11). Then release the handle. The CPR Release handles are located on each side of the head section of the bed.

Figure 1-5. CPR Release

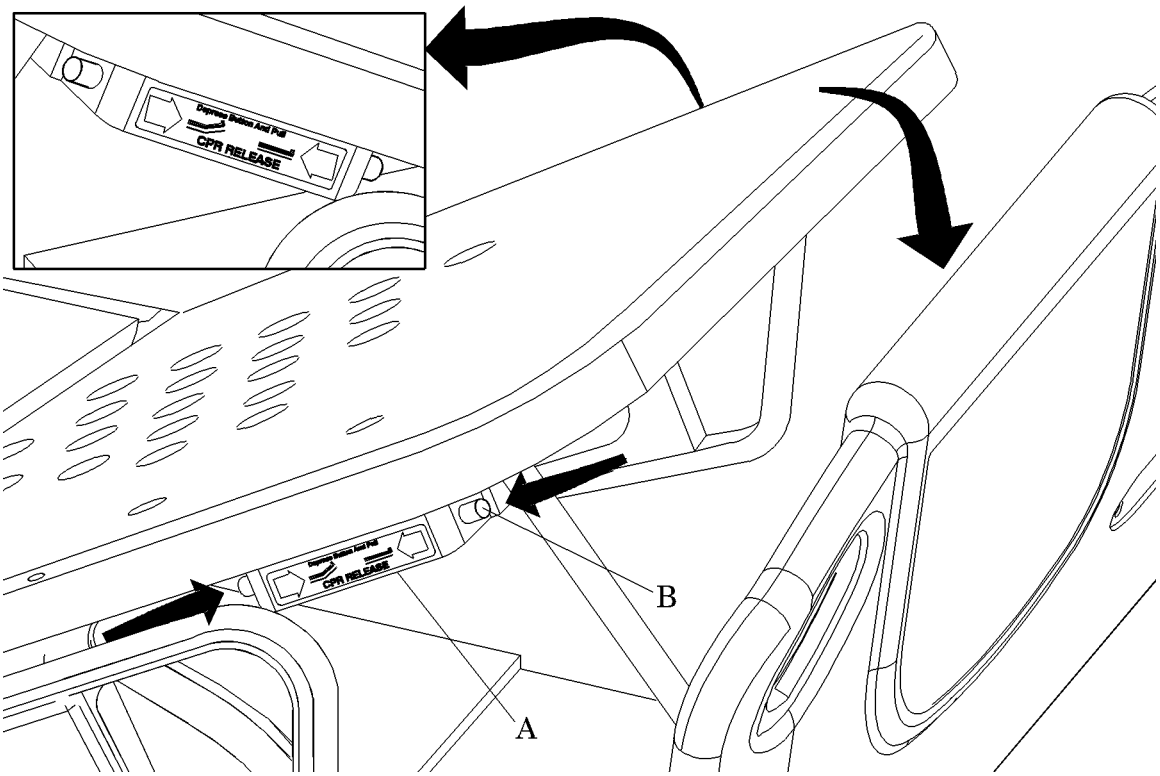

m168_040

If the head section is elevated less than 24°, the knee section may not flatten completely when you activate the CPR release. If this happens, use the *knee down* switch to lower the knee section to the flat position.

Casters

The bed is mounted on four precision bearing, swivel-type casters. Each caster has molded polyurethane wheels. The wheels are easily removed for cleaning or replacing.

Central Brake and Steer

The Advanta™ Bed is equipped with four-wheel braking and two-wheel steering. The pedal controls can be accessed near the casters at each of the four corners of the bed. The pedals are clearly identified to distinguish between braking (orange) and steering (green).

Activation of the braking system (stepping on one orange pedal) locks all four casters (wheels and swivels).

Activation of the steering system (stepping on one green pedal) locks the swivel on both casters (steer lock) at the foot end of the bed. This enables easy steering of the bed along corridors.

In the neutral position (neither brake nor steer), the swivels and casters move freely, allowing the bed to be moved in any direction. This mode is used for exact positioning of the bed and maneuvering in tight areas.

Manual Operation

If electrical power becomes unavailable, the hilow and head functions may be manually operated by using the removable IV pole.

Headboard and Footboard

Advanta™ Beds have post-type bed end mountings. The headboard and footboard slide down onto the vertical mounting posts located at each end of the bed and are not locked in place. You can remove the headboard or footboard by lifting them vertically off the mounting posts.

Both the headboard and footboard feature multi-piece, blow-molded plastic construction with internal reinforcements, and a high pressure laminate (HPL) decorator panel. They also include steel tubing inserts for mounting purposes.

Footboard

The footboard of the Advanta™ Bed houses the footboard control panel and helps protect it from damage. Footboards are removable from the beds and interchangeable among beds with the same category of mattresses (air or non-air). The footboard has hand grips to aid in bed steering and positioning.

Headboard

The headboard is removable and free of protrusions, so that in emergencies it may be used for CPR applications. The hand grips on the headboard make moving the Advanta™ Bed easier.

IV Rod Accommodation

There are four locations where an IV rod can be installed—two at the head end, and two at the foot end. Each location has enough structural integrity to enable the use of fracture frame equipment.

Bed Frame

The mattress is supported by a steel frame that is 36" x 83" (91 cm x 211 cm), and is covered with four 16 gauge, formed steel panels. The panels have formed, smooth edges for safety.

The frame has restraint attachments, drainage bag holders, and a mattress stop. The restraint attachments are welded to the bottom side of the head and foot sections. The mattress stop is attached to the foot section and can be folded down when not in use.

Docking/Wall Protection

The bed can be equipped with various types of roller bumpers designed to protect walls. The roller bumpers can be upgraded as desired.

Siderails

The bed has sectionalized half-length siderails. The bed is equipped with two head siderails and two foot siderails as standard equipment. The siderails can be retracted and stored under the sleep surface frame, which also aids in maneuvering the bed through narrow spaces.

The foot siderails are equipped with an intermediate stop, which provides hand holds for patients entering or exiting the bed.

Each head siderail contains patient bed controls and optional entertainment controls on the inner side, and caregiver bed controls on the outer side. If the optional Patient Position Monitoring (PPM) system is installed, the controls are housed in the left head siderail on the caregiver side.

To adjust: To raise or lower the siderails, press the lever marked “push” located near the siderail, and swing the siderail into the desired position. When

raising the siderail, you will hear a “click” when the siderail is securely in place. To store a siderail, lower it completely, then push it in under the bed surface.

Always tug slightly on a siderail after adjusting it to ensure that it is securely locked in place.

ZoneAire® Sleep Surface

The ZoneAire® Sleep Surface is a multiple-zoned mattress enclosed in foam, ideally suited for the reduction of patient interface pressure. The closed air system is monitored electronically to ensure proper inflation. The system operates in three modes: pressure relief, auto firm, and heel relief.

Pressure Relief Mode

The pressure relief mode is for patients who are assessed to be at risk for pressure ulceration, and who require pressure relief. In the pressure relief mode, the air pressure in each zone of the mattress is automatically maintained to optimize the interface pressure on the patient. Air volumes change to control the surface around the patient’s body, especially the bony areas, to evenly distribute the pressure across the body. The surface adjusts to the patient’s weight distribution, position, and the bed articulation.

To activate: Press the *surface power* switch to begin the automatic pressure relief mode.

Auto Firm Mode

The auto firm mode inflates the air mattresses to maximum firmness. This helps with patient transfers, procedures, and repositioning. The auto firm mode also comes on automatically when the CPR Release is activated. After 30 minutes, the mattress returns to its original setting. This helps ensure that a patient does not rest on a firm surface for an extended period of time.

To activate: Press and release the *auto firm* switch on the ZoneAire® Sleep Surface controls. The indicator light illuminates, showing that the mattress is in the *auto firm* mode.

Heel Relief Mode

The heel relief mode is for patients who are assessed to be at risk for pressure ulceration, with particular risk to the heel area due to their low level of mobility. The heel relief mode decreases the pressure under the heel area, and slightly raises the surface under the calves. There are three heel relief zones

that can be utilized, depending on where the patient's heels rest on the mattress.

To activate: Ensure the ZoneAire® Sleep Surface mattress is in the pressure relief mode. Press and release the appropriate heel relief switch (*heel 1, heel 2, or heel 3*). The indicator light illuminates, showing that the selected mode is active.

Mattress Components

The mattress consists of an upper foam layer (A) on top of two main air bladders, the upper (B) and lower (C) (see figure 1-6 on page 1-16). These components, along with the heel bladder (I), surface control module (G), and air hoses (F), rest in the tub-shaped bottom foam (D). The entire assembly is enclosed in a zippered polyester ticking (E). The bottom portion of the ticking has six magnets (J) enclosed in pockets around the outer edges to hold the mattress in place by adhering to the metal sleep surface.

Figure 1-6. ZoneAire® Sleep Surface Mattress Assembly

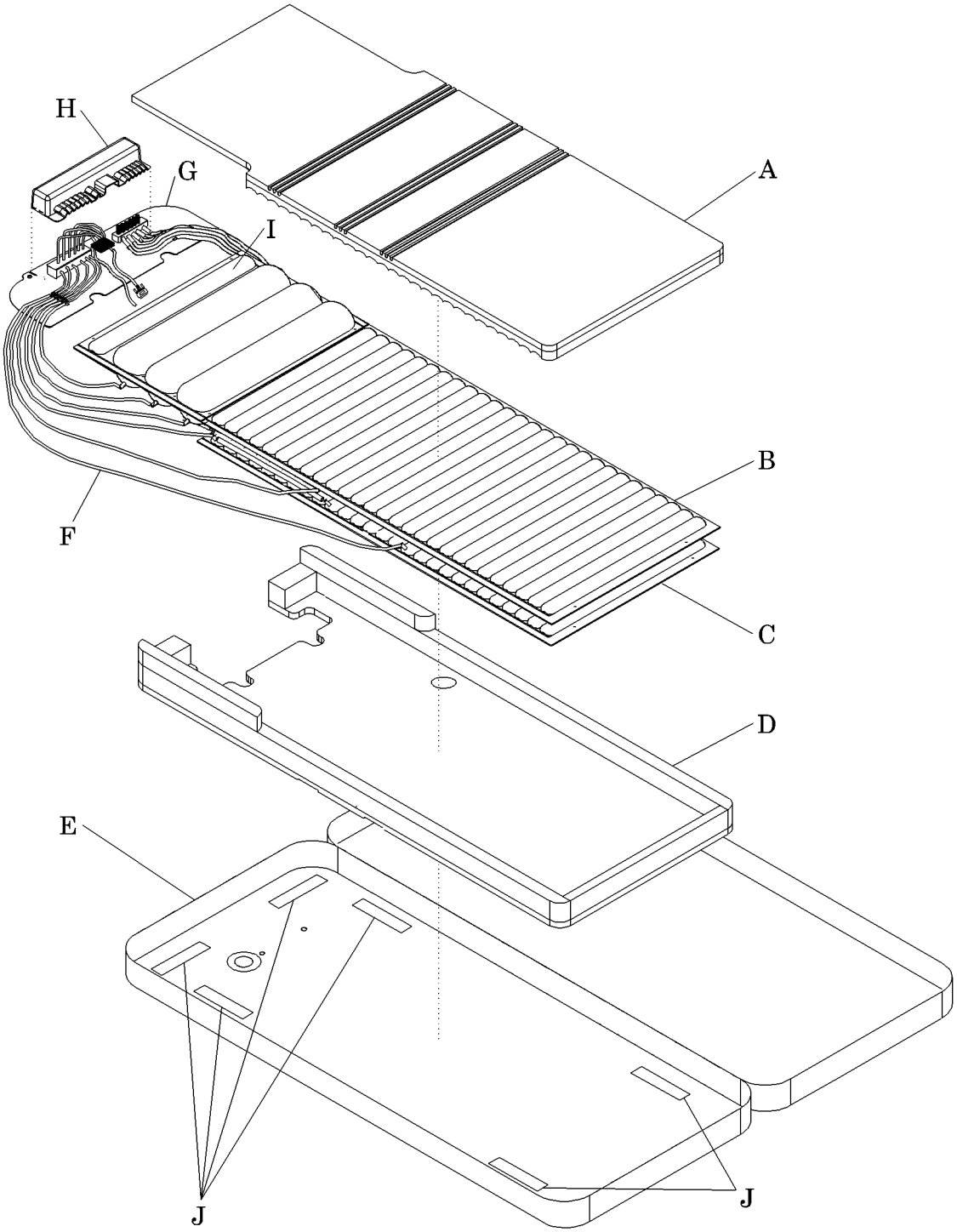

Bed Positions

The Advanta™ Bed has four sections: the head, seat, knee, and foot (see figure 1-7 on page 1-17).

Figure 1-7. Bed Sections

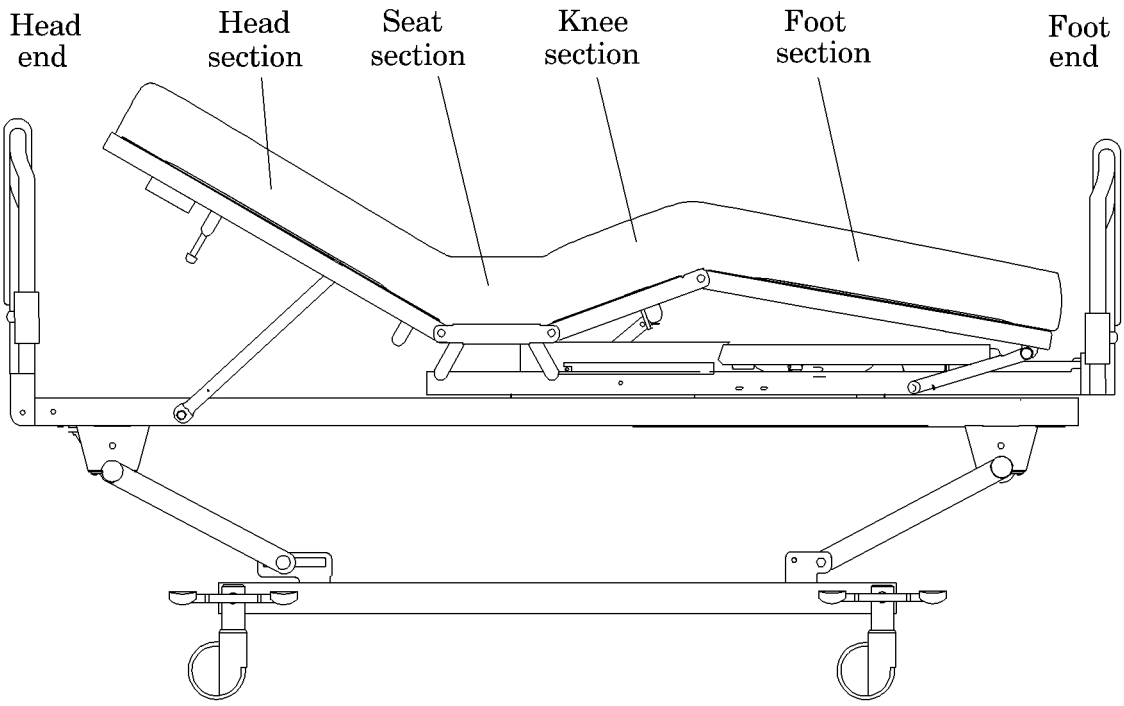

m168_028

Bed positions are shown as follows:

- Hilow (see figure 1-8 on page 1-18)
- Automatic Contour (see figure 1-9 on page 1-19)
- Chair Position (see figure 1-10 on page 1-19)
- Trendelenburg/Reverse Trendelenburg (see figure 1-11 on page 1-20)

Figure 1-8. Hilow Positions

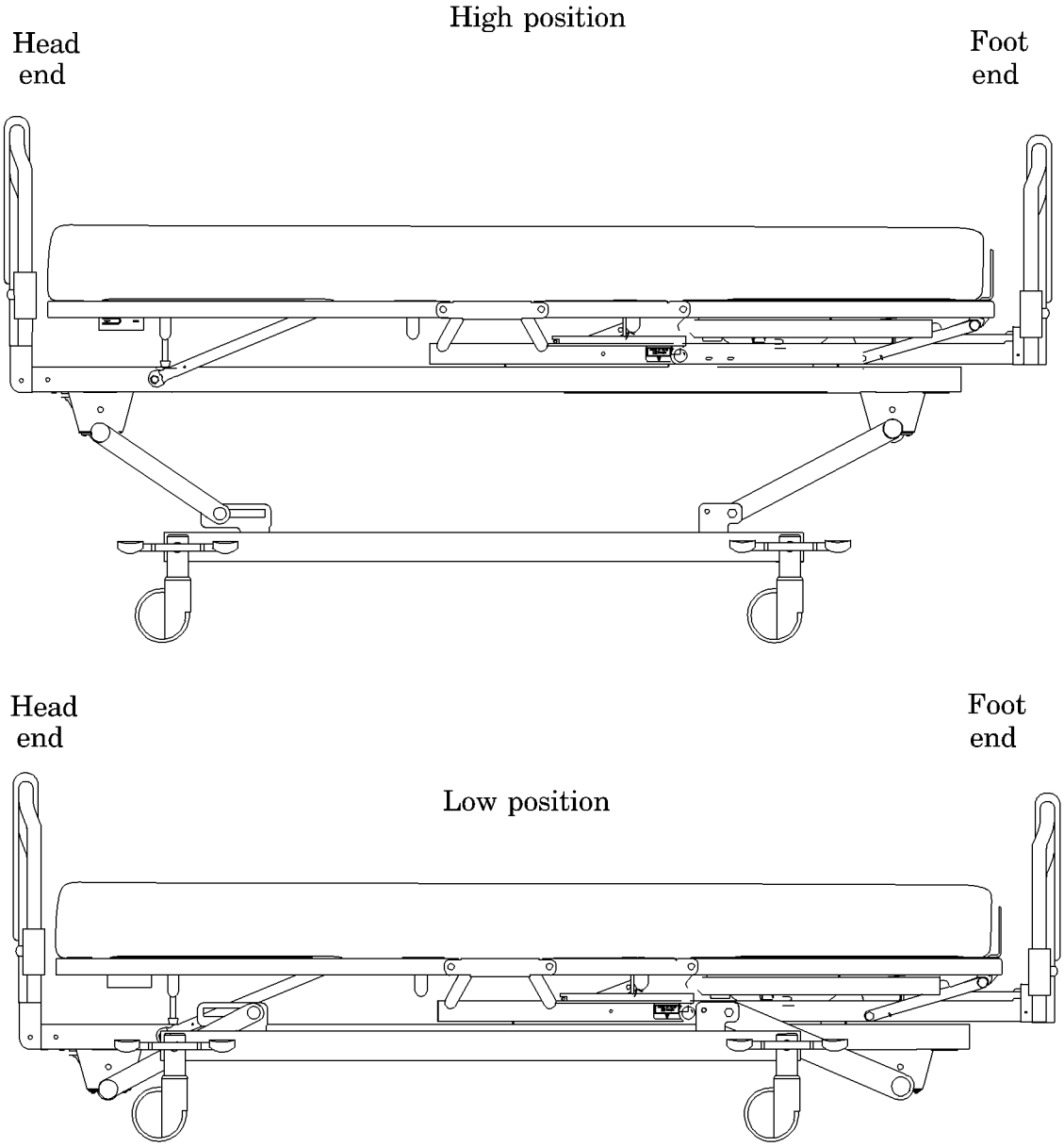

Figure 1-9. Automatic Contour Position

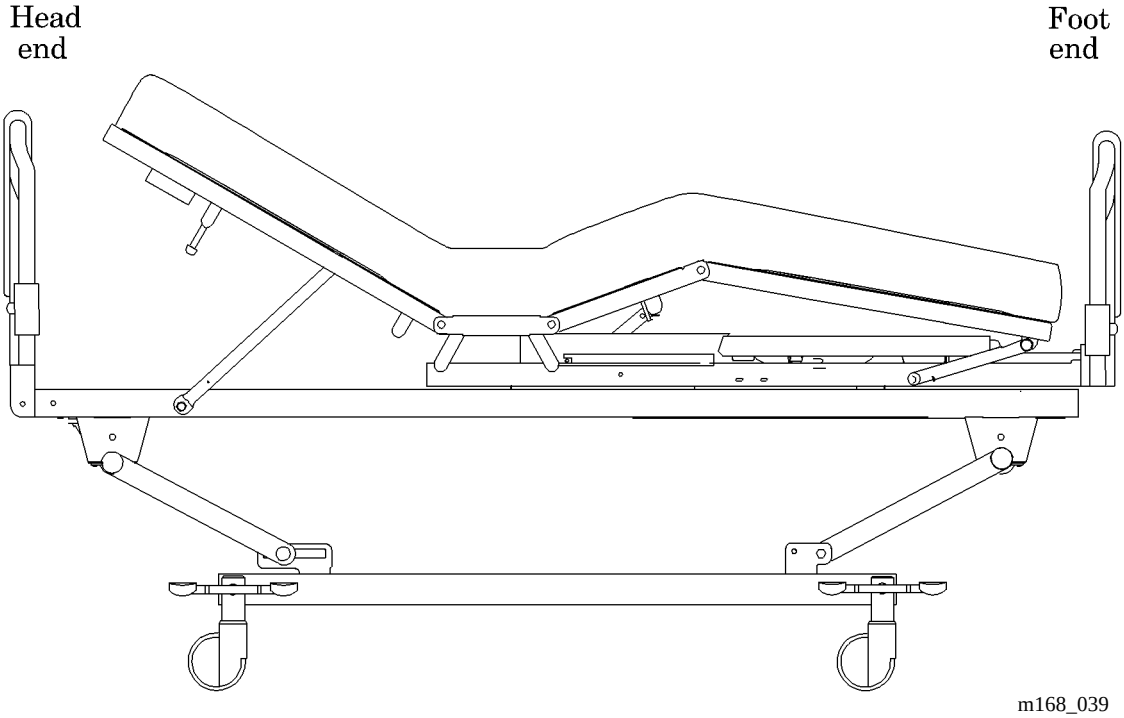

Figure 1-10. Chair Position

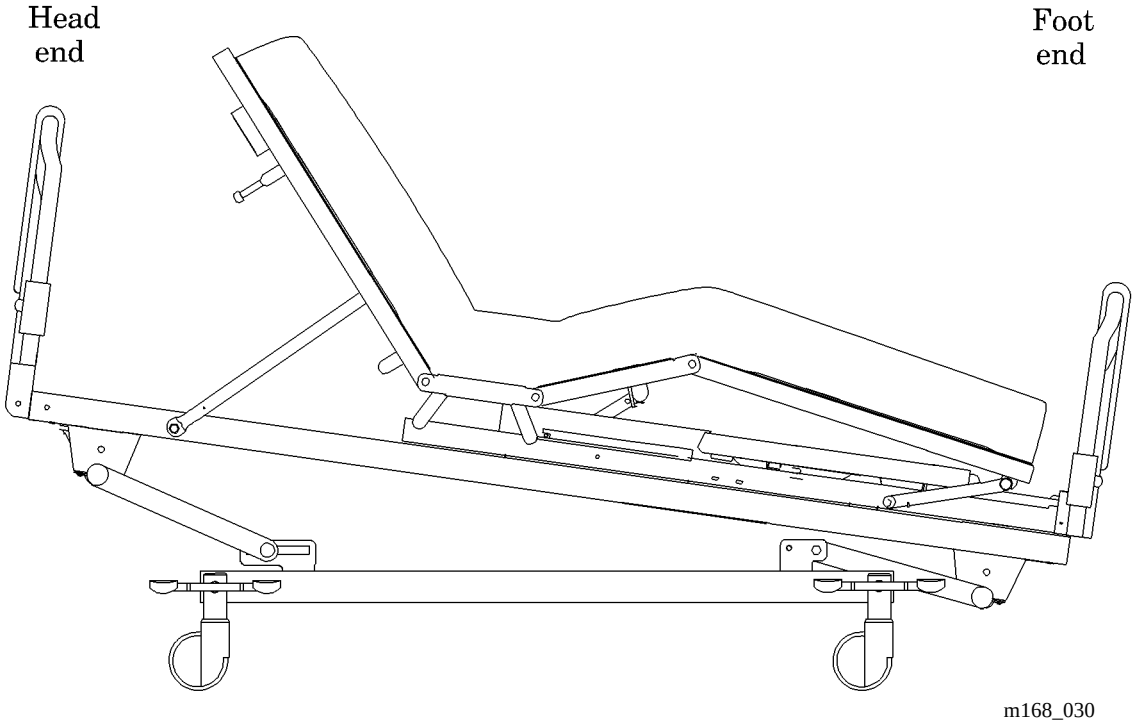

Figure 1-11. Trendelenburg/Reverse Trendelenburg Positions

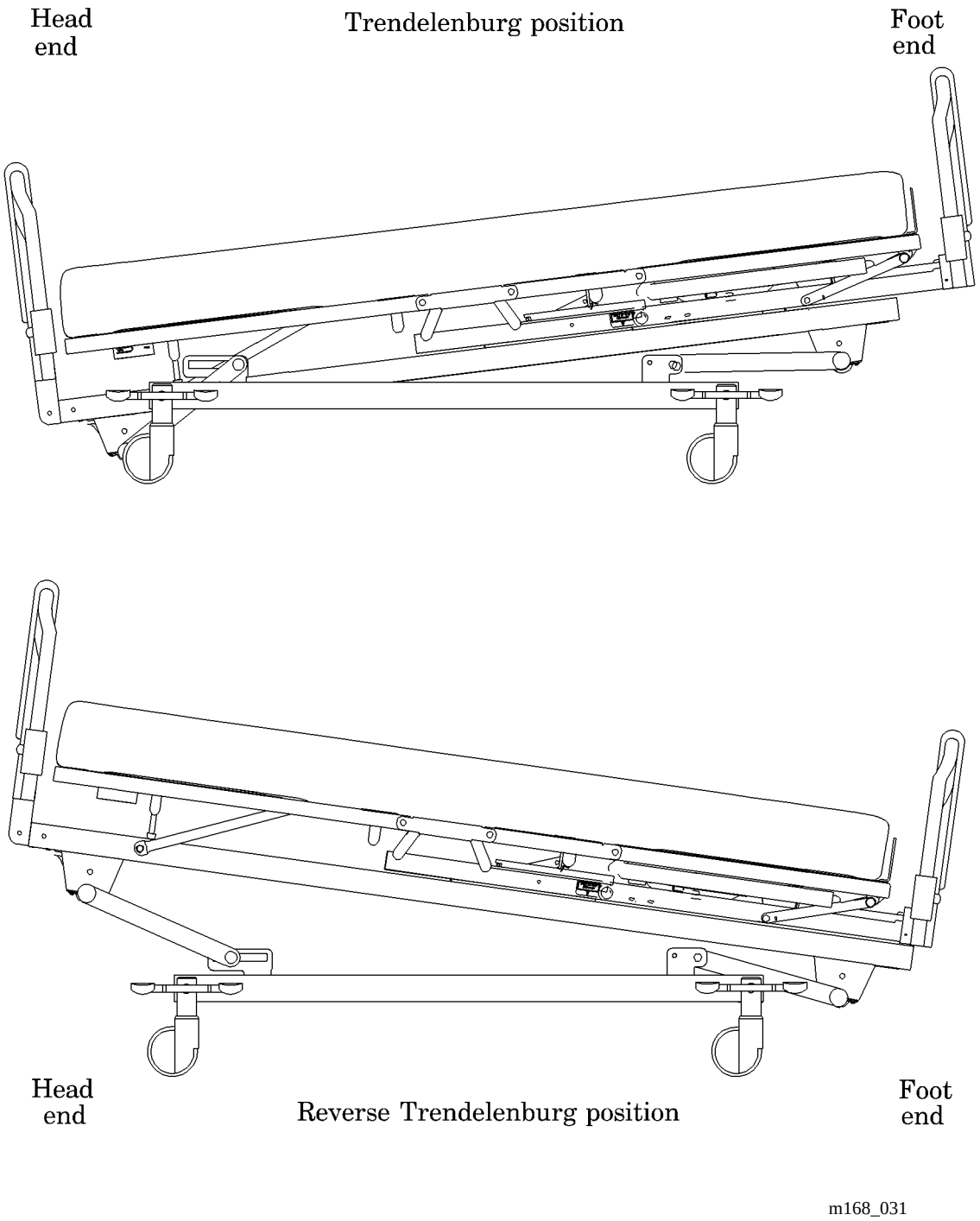

Specifications

Physical Description

For Advanta™ Bed specifications, see table 1-1 on page 1-21.

Table 1-1. Specifications

Feature	Dimension
Total length	91" (231 cm)
Retracted length	78.5" (199.4 cm)
Mattress support width	35" (89 cm)
Mattress support length	83" (211 cm)
Maximum width (siderails up)	42.75" (108.59 cm)
Maximum width (siderails stored)	36" (91 cm)
Maximum headboard height	48" (122 cm)
Maximum footboard height	45" (114 cm)
Maximum siderail height	45" (114 cm)
Power cord length (minimum)	72" (183 cm)
Bed clearance	4.75" (12.07 cm)
Wheel base—length	47.88" (121.62 cm)
Wheel base—width	24.75" (62.87 cm)
Head section inclination (maximum)	65°
Knee section inclination (maximum)	35°
Automatic contour up (maximum)	15°
Automatic contour down	28°
Automatic contour	10°
Hilow range	13.25" (33.66 cm)
Trendelenburg	11°
Reverse Trendelenburg	11°
Caster minimum diameter	5" (13 cm)
Caster minimum tread width	31/32" (24.60 mm)
Caster minimum stem diameter	1" (3 cm)

Electrical Description

The electrical power system is mechanically insulated from the metal parts of the bed. No additional electrical components, such as isolation transformers, are required to make this bed meet applicable electrical codes. The insulation materials are of the type that will not deteriorate to an unsafe level through normal use.

Each bed is factory-tested for complete operation with and without a load. Each bed is tested for insulation integrity and micro leakage currents. Before shipment, each 115 volt model must have less than 65 microamperes of current leakage when ungrounded. Each 230 volt model must have less than 90 microamperes of current leakage when ungrounded.

The supply cord is #16 AWG low-leakage, 3-conductor type STO. It extends 72" (183 cm) from the head end of the bed. The supply cord is UL-listed, and the attachment plug cap is UL-listed and hospital grade.

All electrical components of the bed have been approved by UL for this application.

The bed automatically tests its electrical circuitry to ensure that the system is properly wired in regard to ground and correct polarity. Deficiencies in the grounding or the polarity of the building wiring to this bed are automatically indicated by the *Ground Loss* indicator light on the footboard control panel.

The *Ground Loss* indicator light also illuminates when the bed is used on isolated power systems. This is a normal indication, if the electrical safety check indicators are within specifications.

The *Ground Loss* indicator does not operate on 230 volt beds.

Motors

There are four individual motors to power the separate functions of the bed.

The hilow (bed up/bed down) and head motors have manual crank capability to allow operation in the event of power failure.

All of the motors have a plug-in design to allow them to be easily and rapidly removed from the bed in the event of motor problems. These motors are designed and made especially for the individual functions they are to perform.

Thermal resets are an integral part of the motors, protecting them in the event there is an overload condition. They stop the motor automatically if it heats up to a certain temperature. The motor will not run again until the motor cools. All Advanta™ Bed motors are equipped with automatic thermal resets that allow the motor to operate after it has cooled down.

Limit Switches

Limit switches determine the drive screw end-of-travel limit. The head, knee, and hilow drive assemblies all have limit switches to keep the bed from exceeding its mechanical limits and being damaged.

Regulations, Standards, and Codes

- UL-listed, UL544, Medical/Dental
- CSA®[1] Standard C22.2 #125 Electro medical equipment

Model Identification

For Advanta™ Bed model identification, see table 1-2 on page 1-23.

Table 1-2. Model Identification

Model Number	Description
P1600A	Advanta™ Bed
P1600B	Advanta™ Bed with redesigned arhitecture for new PPM system.

1. CSA® is a registered trademark of Canadian Standards Association.

General Operation

WARNING:
Powered bed mechanisms can cause serious injury. Operate the bed only with persons clear of mechanisms.

The following switches are located in the head siderails and the footboard control panel.

- Bed height adjustment—hilow motors
- Knee section adjustment—knee motor
- Head section adjustment—head motor
- Trendelenburg—hilow motors (footboard control panel only)
- Reverse Trendelenburg—hilow motors (footboard control panel only)
- Chair position—hilow motors, head motor, knee motor (footboard control panel only)

Siderail Controls and Footboard Control Panel

The head end siderails and the footboard control panel contain most of the bed controls. See table 1-3 on page 1-25 through table 1-5 on page 1-27 for caregiver and patient control switches for the siderails, the caregiver control switches for the footboard control panel, and a list of whether the item is standard or optional.

Table 1-3. Caregiver Siderail Control Switches

Left Head End Siderail	Right Head End Siderail
Standard	
Bed up/Bed down	Bed up/Bed down
Head up/Head down (no automatic contour)	Head up/Head down (no automatic contour)
Knee up/Knee down	Knee up/Knee down
Lockout indicator	Lockout indicator
Head angle indicator	Head angle indicator
Optional	
Nurse call	Nurse call
PPM mode: position, exiting, out of bed	
PPM volume: low, med, high	
PPM enable control	
PPM mode indicators: position, exiting, out of bed	
Brake not set indicator	
Bed not down indicator	

Table 1-4. Patient Siderail Control Switches

Left Head End Siderail	Right Head End Siderail
Standard	
Head up/Head down (with automatic contour)	Head up/Head down (with automatic contour)
Knee up/Knee down	Knee up/Knee down
Optional	
Nurse call	Nurse call
Nurse call/Answer indicators	Nurse call/Answer indicators
Room/Read lights	Room/Read lights
TV on/off	TV on/off
Channel up/down	Channel up/down
Radio on/off	Radio on/off
Select (closed captioned TV)	Select (closed captioned TV)
Volume up/down	Volume up/down
Speakers	Speakers
* PPM on/off indicator	

***** The PPM On/Off indicator is an unmarked light on the inner (patient) side.

Table 1-5. Footboard Control Panel Switches/Indicators

Standard	Optional
Entertainment and Lighting	**Sleep Surface Adjustment**
Siderail back light on/off	Surface power on/off
Night light on/off	Auto firm
TV/Radio mute on/off	Heel relief 1 (ZoneAire® Sleep Surface only)
	Heel relief 2 (ZoneAire® Sleep Surface only)
Siderail Lockout	Heel relief 3 (ZoneAire® Sleep Surface only)
Siderail head	
Siderail knee	**Scale**
Siderail hilow	Display on/off
All motors	Lb/Kg
	Zero
Bed Position	Change items
Bed up/Bed down	Plus/Minus (adjust weight)
Trendelenburg/Reverse Trendelenburg	
Chair in/Chair out	
Indicators	
Motor power off indicator	
Ground loss indicator	
Brake not set indicator	
Bed not down indicator	
Service required indicator	
Surface power off (ZoneAire® Sleep Surface)	
Heel relief off (ZoneAire® Sleep Surface)	
Trendelenburg/Reverse Trendelenburg angle indicator (mechanical gauge)	

Standard Controls

Siderail Back Lighting

The siderails have back lights to illuminate the patient bed position controls and make the switches more visible in dim light. The back light can be turned on or off at the footboard control panel.

The back light on the nurse call switches cannot be turned off.

To activate: Press and release the *back light* switch on the footboard control panel to turn on or off the siderail back lighting. When the green indicator light on the *back light* switch is on, the function is on.

Night Light

The night light is located on the bottom center of the bed frame and can be turned on or off as desired. An adjustable light sensor can be set to turn the night light on when light in the room reaches a predetermined level of dimness.

Control location: Footboard control panel

To activate: Press and release the *night light* switch to turn on or off the night light. When the green indicator light on the *night light* switch is on, the function is on.

Night Light Sensor Control

The night light sensor control is located at the foot end of the bed frame, on the right-hand side. It has an adjustable knob to allow you to set the level of light at which the night light comes on.

To increase the sensitivity of the night light sensor so that the night light comes on when the room gets somewhat dark, turn the knob clockwise.

To decrease the sensitivity of the night light sensor so that the night light comes on when the room gets very dark, turn the knob counterclockwise.

To activate: Using a small screwdriver, insert the blade into the hole in the center of the sensor control, and engage the slot in the night light sensor control adjustment knob. Turn clockwise or counterclockwise, as desired.

Lockout Controls

The motor functions of the bed can be deactivated by utilizing the lockout switches located at the footboard control panel. The head, knee, and hilow motors can be locked out in any combination, or all at once. Activation of the knee lockout also keeps the automatic contour function from working.

The CPR function is not affected by any lockouts

The *all motors* lockout switch disables all bed articulation controls. The bed cannot move, except for the CPR Release.

When any lockout is activated, the yellow lockout indicators on the caregiver siderail control panels illuminate.

Control location: Footboard control panel

To activate: Press and release the *siderail head*, *siderail knee*, *siderail hilow*, or *all motors* lockout switch, as desired. When the green indicator light on the switch illuminates, that function is locked out.

On/Off Switches

The footboard control panel has three on/off switches that control different functions of the bed. The *TV/Radio* switch is used to mute the volume of the TV and radio.

The *night light* and *back light* on/off switches are used to turn on or off the night light and siderail back lighting.

To activate: Press and release the *TV/Radio*, *night light*, or *back light* on/off switch, as desired. When the green indicator light on the switch illuminates, that function is on.

Optional Controls

Nurse Call

On an Advanta™ Bed equipped with the nurse call feature, use the *nurse* switch to activate the nurse call. To place a call on the nurse call system, press the *nurse* switch on any siderail control panel. A tone sounds to confirm that the call has been placed, and the yellow *call* indicator light on the patient's siderail control panel illuminates. A red *answer* light illuminates on the patient's siderail control panel when the call has been acknowledged by the answering party.

To activate: Press and release the *nurse* switch. The yellow *call* light on the patient siderail *nurse* switch illuminates.

If power is lost, the nurse call function can still operate for at least 4 hours.

Patient Position Monitor (PPM)

The PPM is an integrated patient motion monitoring system with multiple modes of operation and volume settings. The PPM allows caregivers to individually determine the proper level of unattended monitoring for each patient.

Control location: Left caregiver siderail

Enable Switch

For A model beds:
Access to the mode and volume control switches on the PPM system can be gained by pressing and holding the *enable* switch. This feature allows easy access to the PPM controls, while reducing the potential for accidental or intentional use by unauthorized personnel.

For B model beds:
The *enable* switch is only used to disable the system. The PPM system can be disarmed or silenced by pressing and holding the *enable* switch and any *mode* switch.

System Power

Turning on the system: For best results, the patient should be centered on the mattress, both from head-to-foot and from side-to-side. If extra equipment must be added to the bed, be sure to do so before activating the PPM system.

After activation, the addition of 30 lb (14 kg) or more causes the system to beep (not alarm) until the weight is removed.

For A model beds:
Turn on the system by simultaneously pressing and holding the *enable* switch and the *mode* switch. When first turned on, the system is in the Position mode of operation.

For B model beds:
Turn on the system by pressing the desired *mode* switch; *Position, Exiting,* or *Out of Bed*.

Turning off the system:

For A model beds:
To turn the system off, simultaneously press and hold the *enable* switch and *mode* switch until all the lights under the *mode* and *volume* switches are off.

For B model beds:
To turn the system off, simultaneously press and hold the *enable* switch and any *mode* switch until all the lights under the *mode* and *volume* switches are off.

After an alarm is activated, the system must be turned off at the caregiver siderail to turn off the alarm. The PPM system may then be turned on again (reset), if desired.

CAUTION:
Once the system has been turned off, the caregiver must re-arm it. The system does not re-arm itself and will remain inoperative until manually re-armed.

Modes of Operation

For A model beds:
The PPM has four different modes of operation:

- Position (all three indicator lights on)
- Exiting (bottom two indicator lights on)
- Out of Bed (bottom indicator light on)
- Off (all indicator lights off)

For B model beds:
The PPM has four different modes of operation:

- Position (Position indicator light on)
- Exiting (Exiting indicator light on)
- Out of Bed (Out of Bed indicator light on)
- Off (all indicator lights off)

For A model beds:
The caregiver can change the mode of operation by pressing and holding the *enable* switch, while pressing and releasing the *mode* switch, until the desired mode is achieved. The system cycles through the modes in the following sequence: Off, Out Of Bed, Exiting, and Position.

For B model beds:
The caregiver can change the mode of operation by first disarming the system, and then rearming it in the desired mode.

For the PPM system to activate, the patient's weight must be between 70 lb and 450 lb (32 kg to 204 kg).

If the PPM system is activated, unplugging the bed (or a loss of power) causes the PPM to send a nurse call that continues until power is restored.

Position mode: The Position mode sets off an alarm when a patient moves towards either siderail or away from the head section, such as when a patient sits up. This mode should be used when a caregiver wants to be alerted as soon as the patient begins moving.

To activate:

For A model beds:

- Ensure that the patient is centered on the mattress and lying still and that no visitors or caregivers are inadvertently moving the bed or affecting the bed scale, such as resting a hand or arm on a siderail or headboard.
- Press and hold the *enable* switch, and press and release the *mode* switch until the indicator light next to the word *Position* illuminates.
- Release the *enable* switch.

It takes approximately 5 seconds for the PPM to activate.

For B model beds:

- Ensure that the patient is centered on the mattress and lying still and that no visitors or caregivers are inadvertently moving the bed or affecting the bed scale, such as resting a hand or arm on a siderail or headboard.
- Press and hold the *Position* switch until the indicator light next to the word *Position* starts to flash.
- Release the *Position* switch.

It takes approximately 5 seconds for the PPM to activate.

If patient movement is detected while in the Position mode, an audible alarm sounds from the bed, the top *Position* light begins flashing, and a repeating nurse call is sent. If the patient leaves the bed, the *Out of Bed* light begins flashing. Both lights and alarms continue until the PPM system is turned off, even if the patient lies down on the bed again.

Exiting mode: The Exiting mode sets off an alarm when a patient moves both away from the head section and towards the egress points of the bed. This mode should be used when a caregiver wants to be alerted when egress is attempted.

To activate:

For A model beds:

- Ensure that the patient is centered on the mattress and lying still, and that no visitors or caregivers are inadvertently moving the bed or affecting the bed scale such as resting a hand or arm on a siderail or headboard.
- Press and hold the *enable* switch, and press and release the *mode* switch until the indicator light next to the word *Exiting* illuminates.
- Release the *enable* switch.

It takes approximately 5 seconds for the PPM to activate.

For B model beds:

- Ensure that the patient is centered on the mattress and lying still, and that no visitors or caregivers are inadvertently moving the bed or

affecting the bed scale such as resting a hand or arm on a siderail or headboard.

- Press and hold the *Exiting* switch until the indicator light next to the word *Exiting* starts to flash.
- Release the *Exiting* switch.

It takes approximately 5 seconds for the PPM to activate.

When activated and in the Exiting mode, if the PPM detects patient movement away from the head section and towards the edge of the bed, an audible alarm sounds, the middle *Exiting* light begins flashing, and a repeating nurse call is sent. If the patient leaves the bed, the *Out of Bed* light also begins flashing. Both lights and alarms continue until the PPM system is turned off, even if the patient lies down on the bed again.

Out of Bed mode: The Out of Bed mode sets off an alarm when a patient's weight shifts significantly off the frame of the bed. This mode should be used when a caregiver wants the patient to be able to move freely within the bed, but to be alerted when the patient leaves the bed.

To activate:

For A model beds:

- Ensure that the patient is centered on the mattress and lying still and that no visitors or caregivers are inadvertently moving the bed or affecting the bed scale such as resting a hand or arm on a siderail or headboard.
- Press and hold the *enable* switch, and press and release the *mode* switch until the indicator light next to the words *Out of Bed* illuminates.
- Release the *enable* switch.

It takes approximately 5 seconds for the PPM to activate.

For B model beds:

- Ensure that the patient is centered on the mattress and lying still and that no visitors or caregivers are inadvertently moving the bed or

affecting the bed scale such as resting a hand or arm on a siderail or headboard.

- Press and hold the *Out of Bed* switch until the indicator light next to the words *Out of Bed* starts to flash.
- Release the *Out of Bed* switch.

It takes approximately 5 seconds for the PPM to activate.

When activated and in the *Out of Bed* mode, if the PPM detects patient movement off the bed, an audible alarm sounds, the bottom *Out of Bed* light begins flashing, and a repeating nurse call is sent. The light and alarm continue until the PPM system is turned off, even if the patient lies down on the bed again.

Volume and Tone Levels

Changing the volume level:

For A model beds:
To change the volume level, make sure the PPM system is on, then simultaneously press and hold the *enable* switch along with the *volume* switch until the desired volume setting is reached. When the volume is set at high, all three volume indicator lights illuminate. When the volume is set at medium, only the *Med* and *Low* lights illuminate. When the volume is set at low, only the *Low* light illuminates. There is no *off* setting for the volume of the PPM alarm on the bed.

For B model beds:
To change the volume level, make sure the PPM system is on, then press and hold the desired *volume* switch until the LED next to the volume switch is illuminated (approximately 1 second).

Changing the alarm tone:

For A model beds:
The caregiver may wish to change the alarm tone to distinguish the PPM alarm from other pieces of equipment that have audible alarms. There are four different alarm tones. To change the alarm tone, press and hold the *enable* switch, while simultaneously pressing both the *mode* and *volume* switches. The selected alarm will sound until one of the switches is released. When the desired tone is reached, release the switch.

For B model beds:
The caregiver may wish to change the alarm tone to distinguish the PPM alarm from other pieces of equipment that have audible alarms. There are four different alarm tones. Hold any two volume switches, then press and release the third volume switch to change the tone. When the desired tone is reached, release the switch.

Cancelling or Resetting the Alarm

Once an alarm goes off, a caregiver must physically cancel the alarm at the bedside. This is done by turning the system off through the steps listed previously. If necessary, the caregiver can then place the PPM in the desired mode again. Depending on the nurse call system interface, the caregiver may also need to cancel the call at the nurse call room station or other location.

Zeroing for the Out of Bed Mode (Beds Without Scales)

The Advanta™ Bed must be zeroed for the Out of Bed mode to work properly. For beds with scales, see “Zeroing the Scale” on page 1-38. For beds without scales, this can be done at the left caregiver siderail control panel.

For A model beds:

- Make sure the patient is not in the bed, and that no extra equipment or weight is on the bed.
- Turn off the PPM system.
- Press and hold the *enable* switch and *volume* switch. All the PPM indicator lights will begin to flash.
- After a short period, the PPM indicator lights will stop flashing. Continue to hold the *enable* and *volume* switches, and press and hold the *mode* switch for 5 seconds.
- Release all the switches, and the PPM indicator lights will begin to flash.
- **Do not touch the bed until all the lights stop flashing (turn off) and the bed beeps once**. This may take up to 20 seconds.

The bed is now zeroed and the PPM system is ready for use.

For B model beds:

- Make sure the patient is not in the bed, and that no extra equipment or weight is on the bed.
- Turn off the PPM system.
- Press and hold the *Low Volume* and *enable* switch. All the PPM indicator lights will begin to flash.
- After a short period, the PPM indicator lights will stop flashing. Continue to hold the *enable* and *Low Volume* switches, and press and hold the *Out of Bed* switch for 5 seconds.
- Release all the switches, and the PPM indicator lights will begin to flash.
- **Do not touch the bed until all the lights stop flashing (turn off) and the bed beeps once**. This may take up to 20 seconds.

The bed is now zeroed and the PPM system is ready for use.

Bed Scale

The Advanta™ Bed scale has an accuracy of ± 1%, and an operating range of 0 lb to 450 lb (0 kg to 204 kg). The scale display and six scale control switches are located on the footboard control panel. For best results using the scale, follow the instructions carefully.

Before Operating the Scale

The scale is very sensitive. The most accurate reading will be achieved if the bed is not touching anything. This includes the headwall, lines such as pendant controls and ventilators, drainage bags, and anything else that could impact the weight and cause an incorrect weight to appear on the display.

It is also important that no one touch the bed while the scale is operating. For example, touching the footboard can add several pounds to the displayed weight.

Before placing the patient on the bed, the sleep surface must be prepared to accurately weigh the patient. Place all linens, blankets, pillows, or other items the patient will be using on the bed. A list of these items posted near the bed could be helpful for future reference.

Turning the Scale On or Off

If the scale display reads *OFF*, press the *On/Off* switch to turn on the scale power.

NOTE:
The scale automatically turns off after 5 minutes.

Zeroing the Scale

The bed scale must be set at zero before weighing a patient.

- Zero the scale by pressing and holding the *Zero/000.0* switch on the scale control panel.
- Continue holding the *Zero/000.0* switch until the scale display “000.0” stops flashing.
- Release the *Zero/000.0* switch.

Important: after releasing the *Zero/000.0* switch, the scale display *CALC* appears.

- **Do not touch the bed** until the *CALC* stops flashing and a beep sounds. This may take up to 20 seconds.
- Place the patient on the bed.

For the most accurate reading, the patient must be lying still and centered on the mattress.

Changing Items on the Bed

The Advanta™ Bed scale can compensate for items that are added to or removed from the bed. Use the scale control panel to add or remove items on the bed.

- Press and hold the *Change Items* switch on the scale control panel until the displayed weight stops flashing.
- Release the *Change Items* switch to hold the patient’s weight in the memory while items are being changed.
- Change the items on the bed.

NOTE:
If there is a list of items, you may want to update the list at this time.

- After all desired items on the bed are changed, press and release the *Change Items* switch to display the patient’s weight again.

Changing the Units of Measurement

The scale can display the patient’s weight in either pounds or kilograms.

To change from one unit of measure to the other, press and release the *LBS/KGS* switch on the scale control panel.

Manual Weight Adjustment

The displayed weight of the scale can be adjusted manually by using the *Plus* + and *Minus* - switches on the scale control panel.

To adjust the weight up:

- Press and hold the *Plus* + switch on the scale control panel.
- Release the switch when the desired weight is displayed.

To adjust the weight down:

- Press and hold the *Minus* - switch on the scale control panel.
- Release the switch when the desired weight is displayed.

Indicators

Indicator Lights

Indicator lights are used to inform caregivers of important information concerning the Advanta™ Bed. Most indicator lights are located on the footboard control panel.

Motor Power Off: The *Motor Power Off* indicator light illuminates when the *All Motors* lockout switch has been activated.

Ground Loss: The *Ground Loss* indicator light flashes when the electrical path to ground has unusually high resistance or when polarity is reversed for phase and neutral.

Brake Not Set: The *Brake Not Set* indicator light flashes when the brakes are not fully engaged. Unless the bed is being moved intentionally, the brakes should always be applied to help minimize potential safety hazards. This indicator light is located on the caregiver side of the left head end siderail.

Bed Not Down: The *Bed Not Down* indicator light illuminates when the bed is not at its lowest position. For enhanced patient safety, it is recommended that the bed be in the lowest position unless a caregiver is present. This indicator light is located on the caregiver side of the left head end siderail.

Service Required: The *Service Required* indicator light flashes when the system detects a malfunction.

Surface Power Off (ZoneAire® Sleep Surface only): The *Surface Power Off* indicator light flashes when the air system power is disconnected.

Heel Relief Off (ZoneAire® Sleep Surface only): The *Heel Relief Off* indicator light comes on when the heel relief mode on the ZoneAire® Sleep Surface mattress is inactive.

Siderail Lockout Indicator: The siderail bed functions can be locked out to prohibit unauthorized use. This is done by selecting the appropriate lockout switch on the footboard. When a lockout is engaged, the lockout indicator on the siderail illuminates. If a bed function does not work, check to see whether the lockout indicator is on.

Safety Tips

Service and Maintenance

When you work with the bed in the high position, set the brakes, and place bed stands under the upper lift arm pivots or 2" x 4"s between the frame and lift arms. This will help prevent injury in case someone accidentally actuates the *hilow down* switch.

If service on the bed requires it to be placed on its side, be sure to store and pad the siderails to prevent damage. Use at least two people to place the bed on its side. If applicable, remove the brake/steer pedals to keep them from being damaged.

At no time is it prudent or necessary for you to have your entire body below the sleep surface and within the confines of the bed. Unplug the bed from its power source prior to cleaning or servicing it. If you need to get under the bed, block up the hilow portion as an added precaution.

SHOCK HAZARD:
Unplug the bed from its power source. Failure to do so could result in personal injury or equipment damage.

SHOCK HAZARD:
Do not expose the bed to excessive moisture. Personal injury or equipment damage could occur.

SHOCK HAZARD:
If fluid is spilled in the footboard area, unplug the bed from its power source. Thoroughly dry the electrical connections for the footboard before plugging the bed into its power source. Personal injury or equipment damage could occur.

WARNING:
Do not use the Advanta™ Bed in the presence of flammable gas or vapors. Personal injury or equipment damage could result.

WARNING:
Use oxygen administering equipment of the nasal, mask, or ventilator type only. Do not use the bed with oxygen tents. Personal injury or equipment damage could occur.

WARNING:
Do not allow personnel to have their entire body below the sleep surface and within the confines of the bed. Personal injury could occur.

WARNING:
Do not work under an unsupported load. Install appropriate temporary supports. Failure to do so could result in personal injury or equipment damage.

WARNING:
Only facility-authorized personnel should troubleshoot the Advanta™ Bed. Troubleshooting by unauthorized personnel could result in personal injury or equipment damage.

WARNING:
Only facility-authorized personnel should perform preventive maintenance on the Advanta™ Bed. Preventive maintenance performed by unauthorized personnel could result in personal injury or equipment damage.

WARNING:
Tie the foot section back toward the head section when preparing to remove the foot end cover. Failure to do so can cause the foot section to fall, resulting in personal injury or equipment damage.

WARNING:
Unplug the bed from its power source before inserting the IV rod for manual operation. An unexpected resumption of power could cause the motor and IV rod to rotate, resulting in personal injury or equipment damage.

WARNING:
Remove the IV rod before plugging the bed into an appropriate power source. The resumption of power could cause the motor and IV rod to rotate, resulting in personal injury or equipment damage.

WARNING:
Only qualified service personnel should use test equipment on the Advanta™ Bed. Allowing unqualified personnel to use test equipment could result in personal injury or equipment damage.

WARNING:
Refer to your VOM owner's manual for complete and detailed information regarding the operation of your VOM. Failure to do so could result in personal injury or equipment damage.

WARNING:
Unplug the bed from its power source before checking ohms/resistance measurements. Failure to disconnect line voltage to the bed can cause personal injury and damage the VOM.

WARNING:
Unplug the bed from its power source before checking ohms/resistance measurements. Failure to disconnect line voltage to the bed can cause personal injury and damage the VOM.

WARNING:
Use a 2 x 4 to support the head end of the bed during this procedure. Failure to do so could cause the head end of the bed to fall resulting in personal injury or equipment damage.

WARNING:
Use a 2 x 4 to support the foot end of the bed during this procedure. Failure to do so could cause the foot end of the bed to fall resulting in personal injury or equipment damage.

WARNING:
Unplug the bed from its power source before performing this procedure. Switches may become activated, causing the bed to operate without warning and cause personal injury.

WARNING:
Get additional help to lay the bed over on its side. Personal injury or equipment damage could occur.

WARNING:
Get additional help to turn the bed onto its casters. Personal injury or equipment damage could occur.

WARNING:
Use jack stands to support the weight of the bed when removing and installing the load cell. If jack stands are not used, the bed can fall, causing personal injury and equipment damage.

WARNING:
Follow the manufacturer’s instructions. Failure to do so could result in personal injury or equipment damage.

WARNING:
Powered bed mechanisms can cause serious injury. Operate the bed only with persons clear of mechanisms.

CAUTION:
To prevent component damage, ensure that your hands are clean and **only** handle the P.C. boards by their edges.

CAUTION:
When handling electronic components, wear an antistatic strap. Failure to do so, could result in component damage.

CAUTION:
For shipping and storage, place the removed P.C. board in an anti-static protective bag. Equipment damage can occur.

CAUTION:
Ensure that the wires are attached to the correct connector. Failure to do so could result in equipment damage.

CAUTION:
Do not disassemble the footboard control panel on the mattress of the bed. Work at a static-free workstation and wear a properly grounded antistatic wrist strap. Failure to do so could damage the electronics in the footboard control panel.

CAUTION:
Be careful not to damage the cables when removing the footboard control panel.

CAUTION:
Do not use harsh cleaners, solvents, or detergents. Equipment damage could occur.

CAUTION:
Do not use silicone-based lubricants. Equipment damage could occur.

CAUTION:
Use caution when removing the air hoses from the air sleep surface solenoid. The fittings are plastic and can break if handled too roughly during the removal process.

CAUTION:
Failure to align the slide switch and drive screw when installing the hilow head drive screw can cause severe damage to the bed.

CAUTION:
Failure to align the slide switch and drive screw when installing the hilow foot drive screw can cause severe damage to the bed.

CAUTION:
Do not lower the foot section while the knee section is down and the foot end cover is removed. Severe damage to the bed can occur.

CAUTION:
Failure to align the slide switch and drive screw when installing the knee drive screw assembly can cause severe damage to the bed.

CAUTION:
Crank the head screw assembly clockwise **only**. The actuator on the limit switch and the lift nut can become damaged if you crank the head screw assembly counterclockwise.

CAUTION:
Do not manually crank the drive screw assemblies past the low or high limits. Equipment damage could occur.

CAUTION:
If your bed is equipped with the Patient Position Monitor, do not set heavy objects directly on the pressure switches. Damage can occur to the pressure switches.

CAUTION:
Attach the large air hose to the air sleep surface compressor with a cable tie. If the hose becomes unattached during operation, equipment damage could occur.

CAUTION:
Align the slide switch and the head limit switch after servicing the head drive screw assembly. Failure to ensure that the CPR latch assembly properly actuates the limit switch could result in equipment damage.

CAUTION:
Align the slide switch and the head limit switch after installing the limit switch assembly. Failure to ensure that the CPR latch assembly properly actuates the limit switch could result in equipment damage.

CAUTION:
Do not over-tighten the limit switch mounting screws. Over-tightening the mounting screws could cause the limit switch to malfunction.

Warning and Caution Labels

Figure 1-12. Warning and Caution Labels

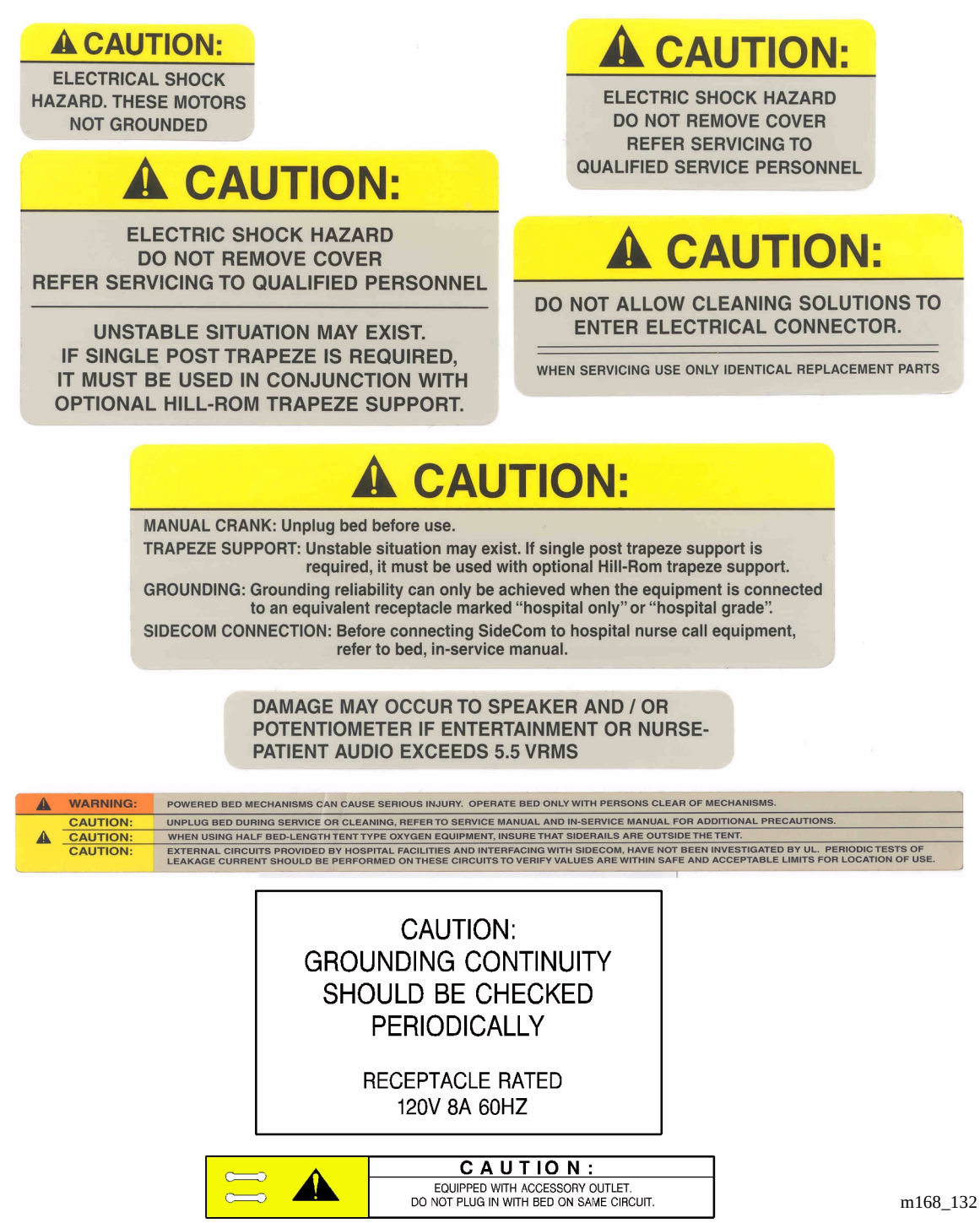

m168_132

NOTES:

Chapter 2
Troubleshooting Procedures

2

Getting Started

WARNING:
Only facility-authorized personnel should troubleshoot the Advanta™ Bed. Troubleshooting by unauthorized personnel could result in personal injury or equipment damage.

Begin each procedure in this chapter with step 1. Follow the sequence outlined (each step assumes the previous step has been completed). In each step, the normal operation of the product can be confirmed by answering **Yes** or **No** to the statement. Your response will lead to another step in the procedure, a repair analysis procedure (RAP), or a component replacement. If more than one component is listed, replace them in the given order.

To begin gathering information about the problem, start with **Initial Actions**.

To isolate or identify a problem and to verify the repair after completing each corrective action (replacing or adjusting a part, seating a connector, etc.), perform the **Function Checks**.

To verify the repair, perform the **Final Actions** after the Function Checks

If troubleshooting procedures do not isolate the problem, call Hill-Rom Technical Support at (800) 445-3720 for assistance.

These troubleshooting techniques will help you locate operational problems on the Advanta™ Bed. This section includes a list of functions and the technical information required to inspect and diagnose problems. Wiring diagrams for all of the boards in the Advanta™ Bed are located in chapter 3.

Test Equipment

WARNING:
Only facility-authorized personnel should troubleshoot the Advanta™ Bed. Troubleshooting by unauthorized personnel could result in personal injury or equipment damage.

You need a digital or analog volt ohm meter (VOM) with fine tip probes to troubleshoot the Advanta™ Bed.

WARNING:
Refer to your VOM owner's manual for complete and detailed information regarding the operation of your VOM. Failure to do so could result in personal injury or equipment damage.

A common digital VOM is shown (see figure 2-1 on page 2-4). The VOM tests three basic electrical functions: alternating current (AC), direct current (DC), and ohms/resistance.

Figure 2-1. Volt Ohm Meter (VOM)

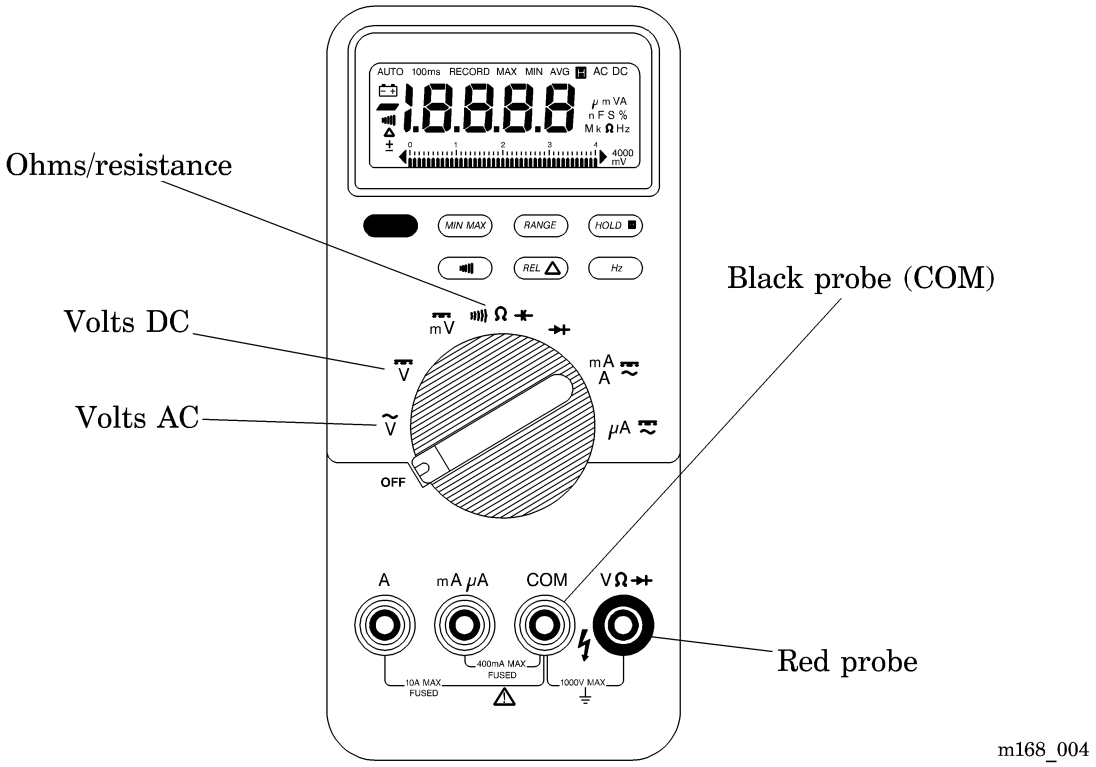

Plug the red probe into the port marked "V Ω." Plug the black probe into the port marked "COM." The troubleshooting repair analysis procedure (RAP) indicates where on the bed to connect the red probe and black probe.

Initial Actions

To gather information from operators concerning problems with the Advanta™ Bed use Initial Actions. Note symptoms or other information concerning the problem that the operator describes. This information helps identify the probable cause.

1. Someone who can explain the problem is available.

   Yes ↓ **No** → Go to “Function Checks” on page 2-6.

2. Ask that person to demonstrate or explain the problem. The problem can be duplicated.

   Yes ↓ **No** → Go to “Function Checks” on page 2-6.

3. The problem is a result of improper operator action.

   Yes ↓ **No** → Go to “Function Checks” on page 2-6.

4. Instruct the operator to refer to the procedures in the Advanta™ Bed User Manual. To ensure proper operation of the Advanta™ Bed, perform the “Function Checks” on page 2-6.

Function Checks

Mechanical Subsystem Troubleshooting

1. **Initial Actions** have been performed.

   Yes **No**
   ↓ → Perform “Initial Actions” on page 2-5.

2. Operate the bed’s electrical controls individualy while observing the associated mechanical parts for evidence of damaged components. The mechanical parts are operating correctly.

   Yes **No**
   ↓ → Remove, replace, and adjust (if necessary) the damaged component(s).

3. Operate the bed’s electrical controls while listening for evidence of damage to the mechanical components. The mechanical parts are operating correctly without unusual noise.

   Yes **No**
   ↓ → Remove, replace, and adjust (if necessary) the damaged component(s).

4. Go to “Final Actions” on page 2-17.

Electrical Subsystem Troubleshooting

Use the following isolation sequence for identifying the malfunctioning component in the electrical subsystem:

1. **Initial Actions** have been performed.

   Yes **No**
   ↓ → Perform “Initial Actions” on page 2-5.

2. The bed is plugged into an appropriate power source.

   Yes **No**
   ↓ → Plug the bed into an appropriate power source.

3. Activate the siderail controls and determine if the problem resides in one or both siderails. The malfunction occurs when either siderail is activated.

   Yes **No**
   ↓ → Check for a defective function switch on the switch P.C. board assembly, and/or a damaged connection between the switch P.C.

board assembly and the testport cable assembly. Remove, replace, and adjust (if necessary) the damaged component(s).

This solves the problem.

Yes ↓ **No** → Go to step 5.

4. Go to “Final Actions” on page 2-17.

5. Isolate each siderail to determine if one is affecting the other. Do this by alternately unplugging each siderail at the testport cable assembly and operating the connected siderail switches (only for bed functions). The bed functions correctly with one siderail connected, but not the other.

   Yes ↓ **No** → Go to step 8.

6. If the bed functions correctly with one siderail connected to the testport cable assembly (but not the other), check the disconnected siderail for a switch failed in the closed position, a wire shorted to ground, and/or a damaged switch P.C. board assembly. Remove, replace, and adjust (if necessary) the damaged component(s).

   This solves the problem.

   Yes ↓ **No** → Go to step 8.

7. Go to “Final Actions” on page 2-17.

8. Determine if the footboard assembly is the cause of the malfunction by replacing it with a known good footboard, and activating the switches. The bed operates correctly.

   This solves the problem.

   Yes ↓ **No** → Go to step 10.

9. Go to “Final Actions” on page 2-17.

10. If the fault was not located using the steps above, it will be necessary to use test equipment to isolate the malfunctioning component (see “Head Hilow Does Not Lower” on page 2-19).

Pneumatic Subsystem Troubleshooting

The pneumatic subsystem is comprised of the following five components:

- Bladders, both the top and lower
- Hoses and hose fittings
- Air P.C. board
- Solenoids and valves
- Compressor

1. **Initial Actions** have been performed.

   Yes ↓ **No** → Perform “Initial Actions” on page 2-5.

2. The bed is plugged into an appropriate power source.

   Yes ↓ **No** → Plug the bed into an appropriate power source.

3. The air system *surface power* switch is turned on.

   Yes ↓ **No** → Turn the air system *surface power* switch on.

4. The electrical connections are secure.

   Yes ↓ **No** → Securely connect all electrical cables.

5. The pneumatic hose connections are tight, and the coupling O-rings are not damaged.

   Yes ↓ **No** → Replace damaged O-rings and ensure that all pneumatic hose connections are tight.

6. Refer to the repair and analysis procedures in this chapter to isolate the problem if the preceding checks do not correct the problem.

NOTE:
If the excessive air loss LED is on, reset the air system before you can start troubleshooting using table 2-1 on page 2-11. To do this, turn the air system *surface power* switch off, and then back on.

PPM Function Check

1. Unplug the PPM sensor cable to be checked from the PPM micro P.C. board.

2. Using the digital voltmeter, with no force applied to the PPM sensor, check the PPM sensor resistance. The resistance should be above 100K ohms.

3. Apply pressure to the PPM sensor, the resistance should go down as more pressure is applied.

4. Plug the PPM sensor cable into the PPM micro P.C. board.

5. Check the other PPM sensors to ensure all sensors are working properly.

Service Required LED

The Service Required LED (A) is located on the footboard control panel and provides an alarm system to indicate that service is required (see figure 2-2 on page 2-10).

Figure 2-2. LED Indicators Outside of the Footboard Control Panel Cover

The Service Required LED (A) flashes two different signals: a long flash and a short flash. You can determine the area that requires servicing by noting the different **flashes** (blinks). Observe the length of the LED flashes, and count the number of times each flash occurs. To decode the service required signals, refer to table 2-1 on page 2-11, table 2-2 on page 2-14, and compare the flashes to those listed. The area that requires service, possible cause, and corrective action is indicated.

Table 2-1. Service Required LED Flash Codes

Number of Long Flashes	Number of Short Flashes	Indicated Fault	Possible Cause	Corrective Action
1	2	Stuck key	Defective key panel (upper tier assembly) (see table 5-16 on page 5-45).	Replace the key panel (see “Footboard Control Panel—P.C. Boards and Cables” on page 4-37).
1	4	Shorted input bus	Defective footboard interface P.C. board.	Replace the defective footboard interface P.C. board (see “Footboard Interface P.C. Board” on page 4-109).
2	1	Slow leak	Loose hose or hole in air bladder.	Locate the cause of the leak, and correct as necessary. See “ZoneAire® Sleep Surface Slow Leak—Error Code 2-1” on page 2-33.
2	2	Continuous run error, or possible faulty flow direction valve.	The air compressor runs continuously for more than 10 minutes.	Determine the cause (see “ZoneAire® Sleep Surface Continuous Run—Error Code 2-2” on page 2-35).
2	3	Triac (switch on the air control board) short error	Triac shorted.	Determine the cause of short, and replace the valve (see “ZoneAire® Sleep Surface Triac Short—Error Code 2-3” on page 2-38).
2	4	EEPROM error	Shorted or open communication line between control circuit and pressure sensing circuit.	Determine the cause of shorted or open line (see “ZoneAire® Sleep Surface Sensor EEPROM—Error Code 2-4” on page 2-39).
2	5	Mattress connection error	Electrical connection between the control circuit and the pressure sensing circuit is disconnected.	Reconnect the harness (see “ZoneAire® Sleep Surface Mattress Disconnected—Error Code 2-5” on page 2-42).

Number of Long Flashes	Number of Short Flashes	Indicated Fault	Possible Cause	Corrective Action
2	6	Loss of power error	Blown fuse, triac open.	Determine the cause and correct (see “ZoneAire® Sleep Surface Triac Open—Error Code 2-6” on page 2-46).
2	7	Footboard control panel error	Footboard control panel disconnected. Defective network cable. Defective system in the ZoneAire® Sleep Surface.	Connect the panel (see “Footboard Control Panel—P.C. Boards and Cables” on page 4-37). Repair or replace the defective cable (see “Footboard Control Panel—P.C. Boards and Cables” on page 4-37). Repair or replace the defective system (see “ZoneAire® Sleep Surface Does Not Work” on page 2-58).
4	4	Bed position output failure	Defective bed position output on the footboard interface P.C. board.	Reboot the electronics in the footboard control panel by performing a soft reset (see “Soft Reset (Advanta™ Beds with ZoneAire® Sleep Surface only)” on page 2-17). If the fault still occurs, replace the footboard membrane interface P.C. board.

Footboard Control Panel Switch/LED Test (ZoneAire® Sleep Surface Only)

This test allows you to check for proper operation of the footboard control panel switches (their LED lights) and the LED indicators located outside of the console cover.

1. To conduct this test, the bed’s motor power must be off—Motor Power Off LED on the footboard control panel illuminates (see figure 2-2 on page

2-10). Press the All Motors switch (A) to deactivate the motor power if necessary (see figure 2-3 on page 2-13).

Figure 2-3. Footboard Control Panel—All Motors Switch

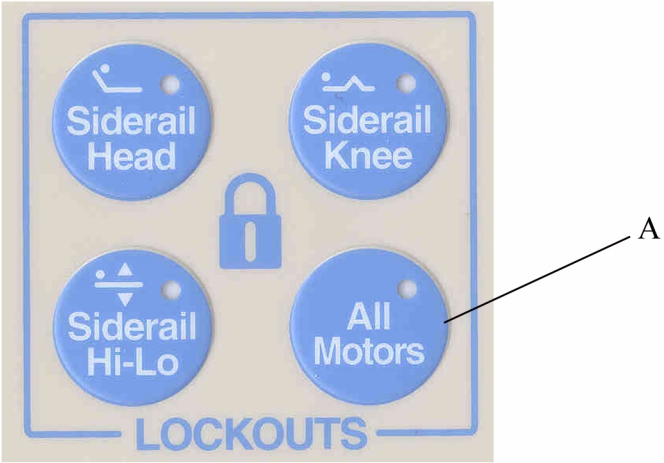

m168_138

2. To activate the control panel switch/LED test, press and hold the *chair in*, *chair out*, *bed up*, and *bed down* switches simultaneously for 4 seconds (see figure 2-4 on page 2-13).

Figure 2-4. Footboard Control Panel Switch/LED Indicator Test

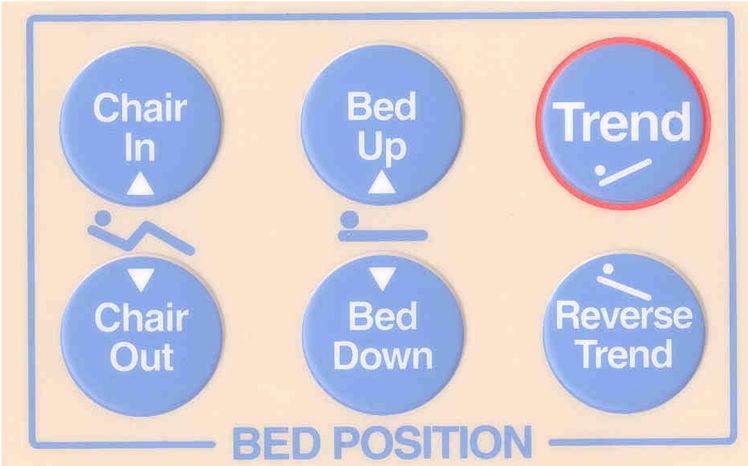

m168_139

3. Press each of the switches indicated in table 2-2 on page 2-14 one at a time. Confirm that its LED, plus the corresponding information LED indicator named in the table, illuminates (when appropriate).

NOTE:
If a switch closure is not detected during any 5 second period, this test will end, and the footboard control panel will return to its previous state.

Table 2-2. Footboard Control Panel Switch/LED Indicator Test

Pressing This Button on the Footboard Control Panel (Area)	Lights This LED Indicator
Surface power (sleep surface)	Surface power LED indicator
Heel 1 (sleep surface)	Heel 1 LED indicator
Heel 2 (sleep surface)	Heel 2 LED indicator
Heel 3 (sleep surface	Heel 3 LED indicator
Auto firm (sleep surface)	Auto firmLED indicator
Siderail head (lockout)	Siderail head lockout LED indicator
Siderail hi-lo (lockout)	Siderail hi-lo lockout LED indicator
Siderail knee (lockout)	Knee lockout LED indicator
Bed up (bed position)	Motor power off, service required, and heel relief off LED indicators
Chair in (bed position)	Motor power off, service required, and heel relief off LED indicators
Trend (bed position)	Motor power off, service required, and heel relief off LED indicators
Bed down (bed position)	Motor power off, service required, and heel relief off LED indicators
Chair out (bed position)	Motor power off, service required, and heel relief off LED indicators
Reverse trend (bed position)	Motor power off, service required, and heel relief off LED indicators
Back light	Back light LED indicator

2

Air System Self-Diagnostic Test

This self-diagnostic test enables the bed to automatically check the operation of the drive circuitry for the air manifold valves, flow direction valve, and pump. This only tests for power being switched to each valve or pump component to determine if a possible fuse has failed or other power failure. It does not test for current flow through any valve or pump.

1. To conduct this test, the bed's motor power must be off—Motor Power Off LED on the footboard control panel is illuminated (see figure 2-2 on page 2-10). Press the *All Motors* switch (A) to deactivate the motor power if necessary (see figure 2-3 on page 2-13).

2. To activate the air system self diagnostic test:

- Press and hold the *bed down* and *auto firm* switches simultaneously for 5 seconds (see figure 2-5 on page 2-15).

Figure 2-5. Bed Position and Sleep Surface Switches

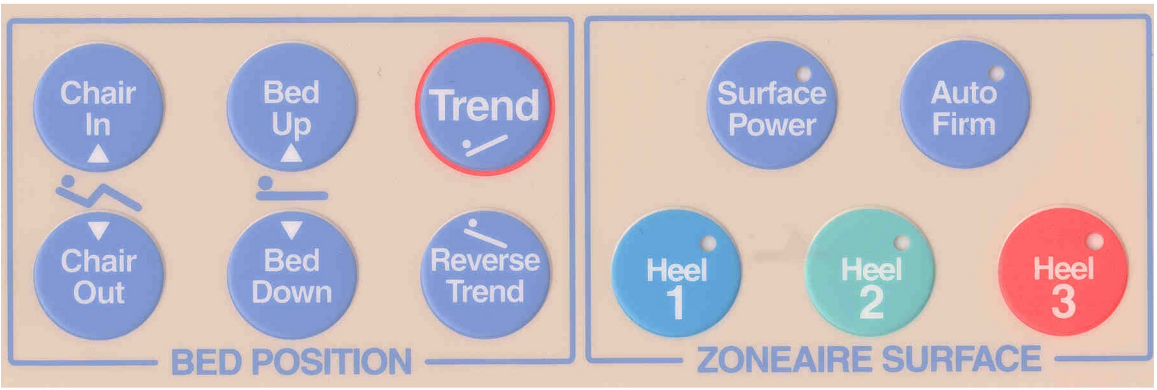

m168_140

3. Confirm which circuits have passed or failed in table 2-3 on page 2-16 by observing the *surface power* LED and the corresponding footboard LED.

NOTE:
While the test is being done, the *surface power* LED and the corresponding footboard LED of that component will be flashing. When the test is complete, the footboard LEDs that correspond with each drive circuit will either remain on or flash. Since there are more items to test than available LED's, the results will be displayed in two passes. The *surface power* LED will determine which pass is being displayed. If it is flashing, it is pass 1, and if it is on (steady), it is pass 2. The circuits that pass the test will light their corresponding LED steady

for 7 seconds. The circuits that fail will **flash** their corresponding LED for 7 seconds.

Table 2-3. Air System Self-Diagnostic Test—Surface Power LED and Corresponding LED

If *Surface Power* LED indicator is FLASHING:	
Corresponding circuit that has FAILED	**Lights this LED indicator on the footboard control panel**
Head manifold valve	Auto firm
Seat manifold valve	Service required
Knee manifold valve	Surface power off
Heel top manifold valve	Heel 1
Heel middle manifold valve	Heel 2
Heel bottom manifold valve	Heel 3
If *Surface Power* LED indicator is ON:	
Corresponding circuit that has PASSED	**Lights this LED indicator on the footboard control panel**
Pump	Auto firm
Flow direction valve	Surface power off

Air System Independent Diagnostic Test

This independent diagnostic test enables the bed to automatically check the operation of the relay, air manifold valves, flow direction valve, and pump.

1. To conduct this test, the bed's motor power must be off—Motor Power Off LED on the footboard control panel is illuminated (see figure 2-2 on page 2-10). Press the All Motors switch (A) to deactivate the motor power if necessary (see figure 2-3 on page 2-13).

2. To activate the air system independent diagnostic test:

- Press and hold the *reverse trend* switch, and then press the corresponding air system component switch for that air system componet from table 2-4 on page 2-17 simultaneously for 5 seconds (see figure 2-5 on page 2-15).

Table 2-4. Air System Independent Diagnostic Test—Corresponding Air System Component Switches

Air System Component	Corresponding air system component switch
Head (auto firm) manifold valve	Auto firm
Seat (body) manifold valve	Bed up
Knee (calf) manifold valve	Bed down
Heel top manifold valve	Heel 3
Heel middle manifold valve	Heel 2
Heel bottom manifold valve	Heel 1
Pump	Chair in
Flow direction valve	Chair out

3. Confirm either visually, audibly, or with appropriate test equipment that the components function properly.

4. The *reverse trend* LED or the *auto firm* LED corresponding to the component activated will flash at 2 Hz.

NOTE:
As long as the *reverse trend* switch remains pressed, the pump or valve will remain activated so that additional components can be activated as well.

The relay will activate whenever the *reverse trend* switch is pressed regardless of whether another switch is pressed.

Soft Reset (Advanta™ Beds with ZoneAire® Sleep Surface only)

This soft reset test is used to reset the system if it is performing incorrectly, such as LED's stuck and configuration error.

Press and hold the *chair in, chair out, night light, and back light* switches simultaneously . This will cause the footboard control panel mode to reset.

Final Actions

1. Complete the required preventive maintenance procedures. See "Preventive Maintenance Schedule" on page 6-10, and "Preventive Maintenance Schedule—ZoneAire® Sleep Surface" on page 6-14.

2. Plug the bed into an appropriate power source.
3. Complete all required administrative tasks.

2.1 Head Hilow Does Not Lower

The head section of the hilow does not lower when the footboard *bed down* switch is activated.

1. Set your VOM to measure V AC. At J/P7, place the black probe into pin 10 and the red probe into pin 1 (see figure 3-19 on page 3-11). Activate the footboard *bed down* switch. The voltage is approximately 120V AC.

   Yes ↓ **No** → If the AC voltage is more than 175V AC, the hilow head drive does not work (refer to procedure 4.22).
   If the AC voltage is approximately 0V AC, then the hilow head motor does not work (refer to procedure 4.18).
   If the voltage is approximately 120V AC, the hilow head capacitor does not work (see figure 2-6 on page 2-19).

Figure 2-6. Hilow Head, Hilow Foot, and Head Capacitor Location

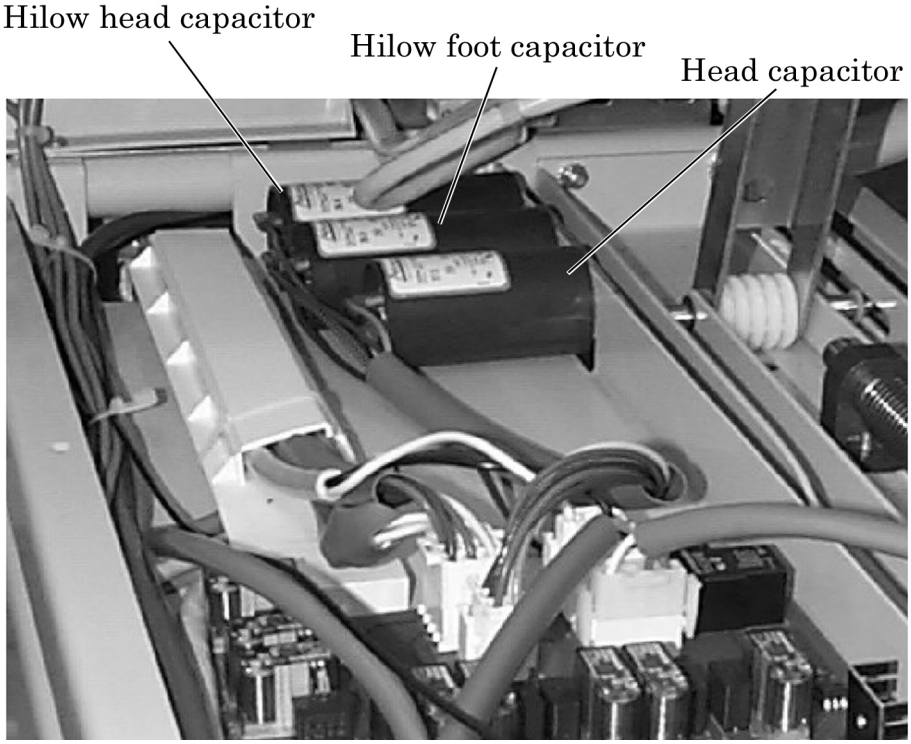

m168_171

This solves the problem.

Yes ↓ **No** → Call Hill-Rom Technical Support at (800) 445-3720.

2. Go to “Final Actions” on page 2-17.

2.2 Foot Hilow Does Not Lower

The foot section of the hilow does not lower when the footboard *bed down* switch is activated.

1. Set your VOM to measure V AC. At J/P7, place the black probe into pin 10 and the red probe into pin 7 (see figure 3-19 on page 3-11). Activate the footboard *bed down* switch. The voltage is approximately 120V AC.

   Yes ↓ **No** → If the AC voltage is more than 175V AC, the hilow foot drive does not work (refer to procedure 4.29).
   If the AC voltage is approximately 0V AC, then the hilow foot motor does not work (refer to procedure 4.19).
   If the voltage is approximately 120V AC, the hilow foot capacitor does not work (see figure 2-6 on page 2-19).

   This solves the problem.

   Yes ↓ **No** → Call Hill-Rom Technical Support at (800) 445-3720.

2. Go to “Final Actions” on page 2-17.

2.3 Head Hilow Does Not Go Up

The head section of the hilow does not go up when the footboard *bed up* switch is activated.

1. Set your VOM to measure V AC. At J/P7, place the black probe into pin 10 and the red probe into pin 2 (see figure 3-19 on page 3-11). Activate the footboard *bed up* switch. The voltage is approximately 120V AC.

   Yes ↓ **No** → If the AC voltage is more than 175V AC, the hilow head drive does not work (refer to procedure 4.22).
   If the AC voltage is approximately 0V AC, then the hilow head motor does not work (refer to procedure 4.18).
   If the voltage is approximately 120V AC, the hilow head capacitor does not work (see figure 2-6 on page 2-19).

   This solves the problem.

   Yes ↓ **No** → Call Hill-Rom Technical Support at (800) 445-3720.

2. Go to “Final Actions” on page 2-17.

2.4 Foot Hilow Does Not Go Up

The foot section of the hilow does not go up when the footboard *bed up* switch is activated.

1. Set your VOM to measure V AC. At J/P7, place the black probe into pin 10 and the red probe into pin 4 (see figure 3-19 on page 3-11). Activate the footboard *bed up* switch. The voltage is approximately 120V AC.

   Yes ↓ **No** → If the AC voltage is more than 175V AC, the hilow foot drive does not work (refer to procedure 4.29).
   If the AC voltage is approximately 0V AC, then the hilow foot motor does not work (refer to procedure 4.19).
   If the voltage is approximately 120V AC, the hilow foot capacitor does not work (see figure 2-6 on page 2-19).

   This solves the problem.

   Yes ↓ **No** → Call Hill-Rom Technical Support at (800) 445-3720.

2. Go to “Final Actions” on page 2-17.

2.5 Knee Section Does Not Lower

The knee section does not lower when the footboard *foot down* switch is activated.

1. Set your VOM to measure V AC. At J/P12, place the black probe into pin 4 and the red probe into pin 2 (see figure 3-19 on page 3-11). Activate the footboard *foot down* switch. The voltage is approximately 120V AC.

   Yes ↓ **No** → If the AC voltage is more than 175V AC, the knee drive does not work (refer to procedure 4.25).
   If the AC voltage is approximately 0V AC, then the knee motor does not work (refer to procedure 4.20).
   If the voltage is approximately 120V AC, the knee capacitor does not work (see figure 2-7 on page 2-23).

Figure 2-7. Knee Motor/Capacitor Location

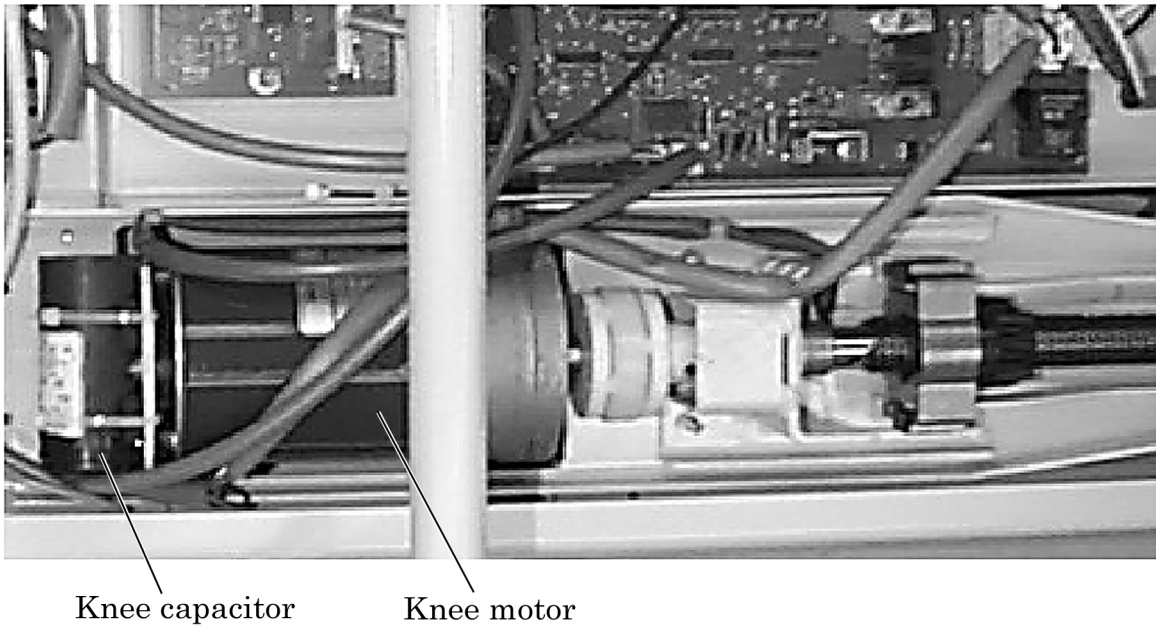

m168_172

This solves the problem.

Yes ↓ **No** → Call Hill-Rom Technical Support at (800) 445-3720.

2. Go to “Final Actions” on page 2-17.

2.6 Knee Section Does Not Go Up

The knee section does not go up when the footboard *foot up* switch is activated.

1. Set your VOM to measure V AC. At J/P12, place the black probe into pin 4 and the red probe into pin 1 (see figure 3-19 on page 3-11). Activate the footboard *foot up* switch. The voltage is approximately 120V AC.

   Yes ↓ **No** → If the AC voltage is more than 175V AC, the knee drive does not work (refer to procedure 4.25).
   If the AC voltage is approximately 0V AC, then the knee motor does not work (refer to procedure 4.20).
   If the voltage is approximately 120V AC, the knee capacitor does not work (see figure 2-7 on page 2-23).

   This solves the problem.

   Yes ↓ **No** → Call Hill-Rom Technical Support at (800) 445-3720.

2. Go to “Final Actions” on page 2-17.

2.7 Head Section Does Not Lower

The head section does not lower when the footboard *head down* switch is activated.

1. Set your VOM to measure V AC. At J/P7, place the black probe into pin 10 and the red probe into pin 3 (see figure 3-19 on page 3-11). Activate the footboard *head down* switch. The voltage is approximately 120V AC.

   Yes ↓ **No** → If the AC voltage is more than 175V AC, the head drive does not work (refer to procedure 4.21).
   If the AC voltage is approximately 0V AC, then the head motor does not work (refer to procedure 4.17).
   If the voltage is approximately 120V AC, the head capacitor does not work (see figure 2-6 on page 2-19).

   This solves the problem.

   Yes ↓ **No** → Call Hill-Rom Technical Support at (800) 445-3720.

2. Go to “Final Actions” on page 2-17.

2.8 Head Section Does Not Go Up

The head section does not go up when the footboard *head up* switch is activated.

SHOCK HAZARD:
Unplug the bed from its power source. Failure to do so could result in personal injury or equipment damage.

1. Unplug the bed from its power source. Manually crank the head section until it starts to go up from the main frame. Remove the IV rod, plug the bed into its power source, and activate the *head up* switch. The head section goes up.

   Yes ↓ **No** → Go to step 3.

2. Go to “Final Actions” on page 2-17.

3. Check the head up limit switch adjustment (refer to procedure 4.23).

   This solves the problem.

   Yes ↓ **No** → Go to step 5.

4. Go to “Final Actions” on page 2-17.

5. Set your VOM to check V AC. At J/P7, place the black probe into pin 10 and the red probe into pin 6 (see figure 3-19 on page 3-11). Activate the footboard *head up* switch. The voltage is approximately 120V AC.

   Yes ↓ **No** → If the AC voltage is more than 175V AC, the head drive does not work (refer to procedure 4.21).
   If the AC voltage is approximately 0V AC, then the head motor does not work (refer to procedure 4.17).
   If the voltage is approximately 120V AC, the head capacitor does not work (see figure 2-6 on page 2-19).

6. This solves the problem.

   Yes ↓ **No** → Call Hill-Rom Technical Support at (800) 445-3720.

7. Go to “Final Actions” on page 2-17.

2.9 Head (Hilow) Section Does Not Lower When the Trendelenburg Switch is Activated

The head section does not lower (the head hilow motor does not operate) when the footboard *trend* switch is activated.

1. The head and knee sleep surfaces are completely flat.

   Yes ↓ **No** → Press the *head* and *knee* switch on the siderail. If they operate from the siderail, go to step 3. If they do not, see "Head Section Does Not Lower" on page 2-25 or "Knee Section Does Not Lower" on page 2-23.

2. Press the *bed down* switch on the siderail. The head section of the hilow function goes down.

   Yes ↓ **No** → See "Head Hilow Does Not Lower" on page 2-19.

3. Set your VOM to check V DC. At J/P15, place the black probe into the heat sink regulator (A) (see figure 2-8 on page 2-28) and the red probe into pin 8 (see figure 3-11 on page 3-10). Activate the footboard *trend* switch. The voltage is between +3 and +6V DC.

   Yes ↓ **No** → Replace the frame interface P.C. board or ZoneAire®/footboard interface P.C. board (refer to procedure 4.36). If this solves the problem, Go to "Final Actions" on page 2-17. Otherwise go to Go to step 4.

4. Replace the logic control P.C. board (refer to procedure 4.35).

   This solves the problem.

   Yes ↓ **No** → Call Hill-Rom Technical Support at (800) 445-3720.

5. Go to "Final Actions" on page 2-17.

Figure 2-8. Logic Control P.C. Board—Heat Sink Regulator

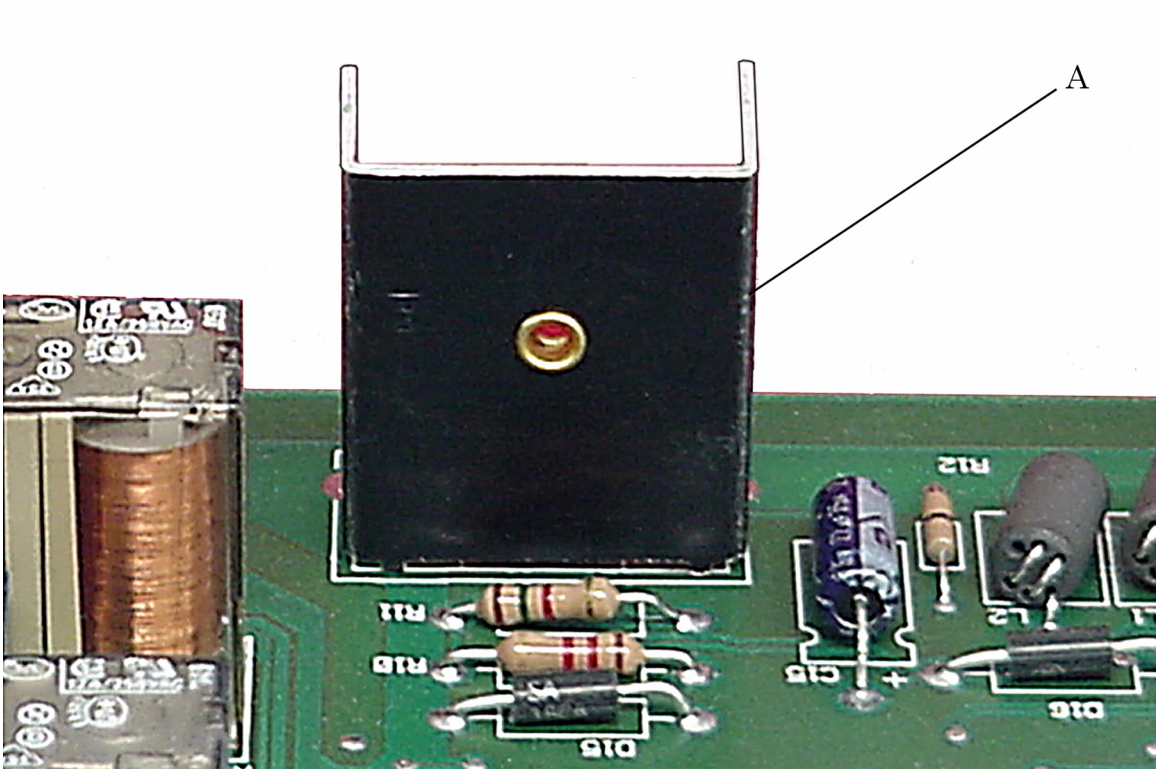

m168_170

2.10 Head (Hilow) Section Does Not Go Up When the Reverse Trendelenburg Switch is Activated

The head section does not go up (the head hilow motor does not operate) when the footboard *reverse trend* switch is activated.

1. The head and knee sleep surfaces are completely flat.

   Yes ↓ **No** → Press the *head* and *knee* switch on the siderail. If they operate from the siderail, go to step 3. If they do not, see "Head Section Does Not Go Up" on page 2-26 or "Knee Section Does Not Go Up" on page 2-24.

2. Press the *bed up* switch on the siderail. The head section of the hilow function goes up.

   Yes ↓ **No** → See "Head Hilow Does Not Go Up" on page 2-21.

3. Set your VOM to check V DC. At J/P15, place the black probe into the heat sink regulator (A) (see figure 2-8 on page 2-28) and the red probe into pin 9 (see figure 3-11 on page 3-10). Activate the footboard *reverse trend* switch. The voltage is between +3 and +6V DC.

   Yes ↓ **No** → Replace the frame interface P.C. board or ZoneAire®/footboard interface P.C. board (refer to procedure 4.36). If this solves the problem, Go to "Final Actions" on page 2-17. Otherwise Go to step 4.

4. Replace the logic control P.C. board (refer to procedure 4.35).

   This solves the problem.

   Yes ↓ **No** → Call Hill-Rom Technical Support at (800) 445-3720.

5. Go to "Final Actions" on page 2-17.

2.11 Foot (Hilow) Section Does Not Lower When the Reverse Trendelenburg Switch is Activated

The foot section does not lower (the foot hilow motor does not operate) when the footboard *reverse trend* switch is activated.

1. The head and knee sleep surfaces are completely flat.

   Yes ↓ **No** → Press the *head* and *knee* switch on the siderail. If they operate from the siderail, go to step 3. If they do not, see "Head Section Does Not Lower" on page 2-25 or "Knee Section Does Not Lower" on page 2-23.

2. Press the *bed down* switch on the siderail. The head section of the hilow function goes down.

   Yes ↓ **No** → See "Foot Hilow Does Not Lower" on page 2-20.

3. Set your VOM to check V DC. At J/P15, place the black probe into the heat sink regulator (A) (see figure 2-8 on page 2-28) and the red probe into pin 9 (see figure 3-11 on page 3-10). Activate the footboard *reverse trend* switch. The voltage is between +3 and +6V DC.

   Yes ↓ **No** → Replace the frame interface P.C. board or ZoneAire®/footboard interface P.C. board (refer to procedure 4.36). If this solves the problem, Go to "Final Actions" on page 2-17. Otherwise Go to step 4.

4. Replace the logic control P.C. board (refer to procedure 4.35).

   This solves the problem.

   Yes ↓ **No** → Call Hill-Rom Technical Support at (800) 445-3720.

5. Go to "Final Actions" on page 2-17.

2.12 Foot (Hilow) Section Does Not Go Up When the Trendelenburg Switch is Activated

The foot section does not go up (the foot hilow motor does not operate) when the footboard *trend* switch is activated.

1. Press the *bed up* switch on the siderail. The foot section of the hilow function goes up.

   Yes ↓ **No** → See “Foot Hilow Does Not Go Up” on page 2-22.

2. Set your VOM to check V DC. At J/P15, place the black probe into the heat sink regulator (A) (see figure 2-8 on page 2-28) and the red probe into pin 8 (see figure 3-11 on page 3-10). Activate the footboard *trend* switch. The voltage is between +3 and +6V DC.

   Yes ↓ **No** → Replace the frame interface P.C. board or ZoneAire®/footboard interface P.C. board (refer to procedure 4.36). If this solves the problem, Go to “Final Actions” on page 2-17. Otherwise Go to step 3.

3. Replace the logic control P.C. board (refer to procedure 4.35).

   This solves the problem.

   Yes ↓ **No** → Call Hill-Rom Technical Support at (800) 445-3720.

4. Go to “Final Actions” on page 2-17.

2.13 Night Light Does Not Operate

The night light does not operate.

1. Cover the night light sensor to activate the night light. The night light switch, located on the footboard is active (LED indicator is on).

   Yes ↓ **No** → Turn the switch on and retest.

2. Check the sensor control adjustment. Adjust the sensor control to the desired setting (see “Night Light Sensor Control” on page 1-28). The night light comes on.

   Yes ↓ **No** → Go to step step 4.

3. Go to “Final Actions” on page 2-17.

4. Check that the night light bulb is not burned out. The bulb works.

   Yes ↓ **No** → Replace the night light bulb (refer to procedure 4.15) and test again.

5. Set your VOM to measure V DC. At J/P15, place the black probe into the heat sink regulator (A) (see figure 2-8 on page 2-28) and the red probe into pin 11 (see figure 3-11 on page 3-10). Activate the switch. The voltage is between +3 and +5V DC.

   Yes ↓ **No** → Replace the frame interface P.C. board or ZoneAire/footboard interface P.C. board (refer to procedure 4.36).

6. Replace the power supply control P.C. board (refer to procedure 4.34).

   This solves the problem.

   Yes ↓ **No** → Call Hill-Rom Technical Support at (800) 445-3720.

7. Go to “Final Actions” on page 2-17.

2.14 ZoneAire® Sleep Surface Slow Leak—Error Code 2-1

When isolating the fault to one component in the pneumatic subsystem, ensure that all cables and air hoses are connected properly. Check the coupling and all tubing for signs of damage.

CAUTION:
To prevent component damage, ensure that your hands are clean, and handle the P.C. boards by their edges **only**.

CAUTION:
When working with electronics, wear an appropriate static strap . Equipment damage can occur.

NOTE:
Leaks are more obvious in the auto firm mode. Hose connections are the most common source of leaks.

1. Press the sleep *surface power* switch and the *auto firm* switch to place the ZoneAire® Sleep Surface in the auto firm mode. Feel around the mattress air hose connections and down the length of the air hose for obvious leaks. Leaks are detected.

   Yes ↓ **No** → Spray soapy water around the air hoses and connections to detect leaks. If leaks are detected, go to step 2.

2. Replace the leaking air hoses. Leaks are stopped.

   Yes ↓ **No** → Spray soapy water around the air hoses and connections to detect leaks. Go to step 4.

3. Go to “Final Actions” on page 2-17.

4. Open the mattress, and feel for holes in the bladders and seams. In the case of a slow leak, remove the suspected air bladder from the mattress, and spray soapy water on the inflated bladder. This reveals the leak.

   Yes ↓ **No** → Replace the air control P.C. board (refer to procedure 4.9). If this solves the problem, go to “Final Actions” on page 2-17. Otherwise, call Hill-Rom Technical Support at (800) 445-3720.

5. Replace the leaking bladder (refer to procedure 4.6). Leaks are stopped.

Yes **No**
↓ → Call Hill-Rom Technical Support at (800) 445-3720.

6. Go to “Final Actions” on page 2-17.

2.15 ZoneAire® Sleep Surface Continuous Run—Error Code 2-2

CAUTION:
To prevent component damage, ensure that your hands are clean, and handle the P.C. boards by their edges **only**.

CAUTION:
When working with electronics, wear an appropriate static strap. Equipment damage can occur.

1. Check the mattress for pinched or disconnected air hoses. Pinched or disconnected air hoses are found.

   Yes ↓ **No** → Go to step 4.

2. Connect the disconnected hoses, or replace the pinched hoses.

   This solves the problem.

   Yes ↓ **No** → Go to step 4.

3. Go to “Final Actions” on page 2-17.

4. Check for large holes in the mattresss upper main bladder, lower main bladder, and in the heel bladder. Also check that hoses are connected to the correct components. Holes are found.

   Yes ↓ **No** → Go to step 9.

5. Connect the air hoses to the correct components, or replace the defective bladder (refer to procedure 4.6).

   This solves the problem.

   Yes ↓ **No** → Go to step 7.

6. Go to “Final Actions” on page 2-17.

7. Reset the system, and deflate the air bladders. Use a VOM to check for 108-130 V AC at connector J/P117, pins 1 and 2 on the air control P.C. board located under the seat section (see figure 3-26 on page 3-27). Voltage is okay.

   Yes ↓ **No** → Go to step 9.

8. Check functionality of the flow direction switching valve. The white dot on top of the flow direction switching valve should click into place during a deflation; also, the valve's resistance reading should be 700 Ohms maximum. The flow direction switching valve functions correctly.

   Yes ↓ **No** → Replace the flow direction switching valve (refer to procedure 4.10).

9. Check the connectors on the air control P.C. board for bent or missing pins, and ensure the connectors are properly seated (see figure 5-11 on page 5-30). Bent or missing pins are found.

   Yes ↓ **No** → Go to step 15.

10. Replace the sensor surface cable (see figure 5-25 on page 5-72).

    This solves the problem.

    Yes ↓ **No** → Go to step 12.

11. Go to "Final Actions" on page 2-17.

12. Replace the bed sensor cable.

    This solves the problem.

    Yes ↓ **No** → Go to step 13.

13. Go to "Final Actions" on page 2-17.

14. Replace the air control P.C. board (refer to procedure 4.9).

    This solves the problem.

    Yes ↓ **No** → Replace the sensor control P.C. board (refer to procedure 4.7). If this solves the problem, go to "Final Actions" on page 2-17. Otherwise, call Hill-Rom Technical Support at (800) 445-3720.

15. Go to “Final Actions” on page 2-17.

2.16 ZoneAire® Sleep Surface Triac Short—Error Code 2-3

A triac short is the most common reason for the valve being energized all of the time.

CAUTION:
To prevent component damage, ensure that your hands are clean, and handle the P.C. boards by their edges **only**.

CAUTION:
Wear an appropriate static strap when working with electronics. Equipment damage can occur.

1. Unplug the bed from its power source.
2. Replace the air control P.C. board (refer to procedure 4.9).

   This solves the problem.

   Yes ↓ **No** → Call Hill-Rom Technical Support at (800) 445-3720.
3. Go to “Final Actions” on page 2-17.

2.17 ZoneAire® Sleep Surface Sensor EEPROM—Error Code 2-4

This error occurs when the circuit detects a faulty reading due to shorted or open communication lines between the control circuit and the pressure sensing circuit. The most common cause for this error is a faulty P.C. board or cable. Troubleshooting this error in the field would take much time and an oscilloscope. Therefore, this method requires inspecting and replacing parts. After inspecting or replacing such parts in the sequence listed, press the sleep *surface power* switch to determine if the problems have been corrected.

SHOCK HAZARD:
Unplug the bed from its power source. Failure to do so could result in personal injury or equipment damage.

CAUTION:
To prevent component damage, ensure that your hands are clean, and handle the P.C. boards by their edges **only**.

CAUTION:
When working with electronics, wear an appropriate static strap. Equipment damage can occur.

1. Unplug the bed from its power source.

2. Inspect the main cable connectors (A) and pins under the foot section for bent, recessed, or missing pins (see figure 2-9 on page 2-40). Replace or repair damaged pins, and connect the cable. This solves the problem.

   Yes ↓ **No** → Go to step 4.

3. Go to “Final Actions” on page 2-17.

4. Replace the sensor surface cable (see figure 5-25 on page 5-72).

   This solves the problem.

   Yes ↓ **No** → Go to step 6.

5. Go to “Final Actions” on page 2-17.

Figure 2-9. Sleep Surface—Sensor Cable Connectors

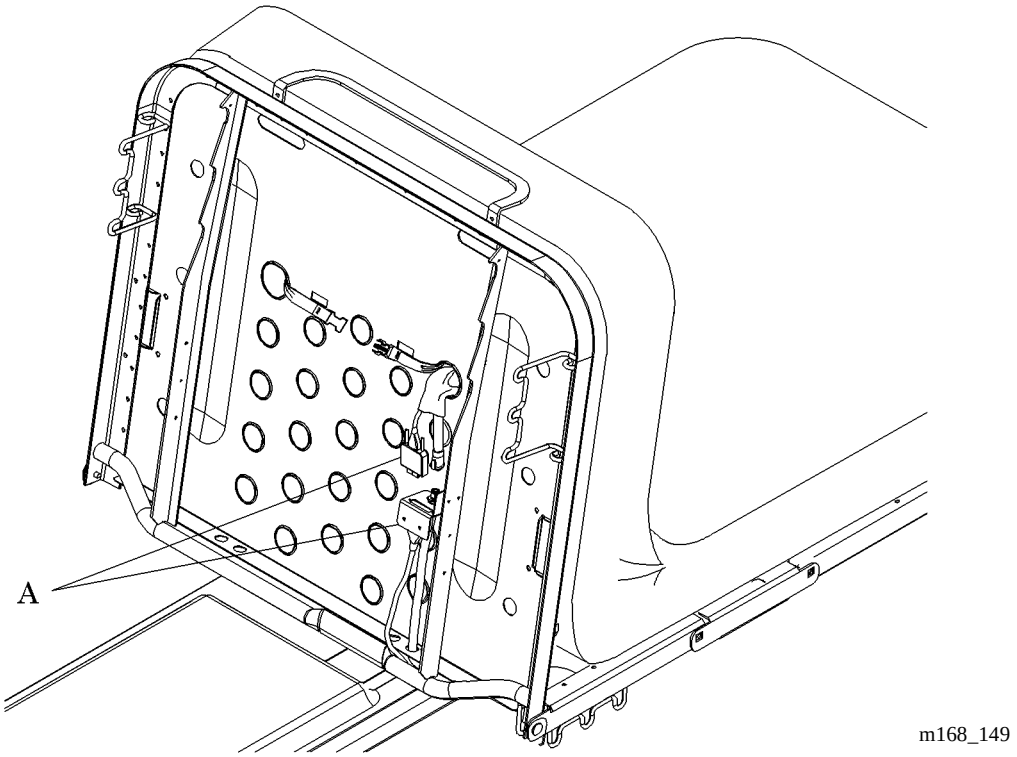

6. Inspect the connector and pins of J/P131 on the sensor P.C. board for bent, recessed, or missing pins. Replace or repair the damaged pins. Connect the connector. This solves the problem.

   Yes ↓ **No** → Go to step 8.

7. Go to “Final Actions” on page 2-17.

8. Inspect the connector and pins of J/P114 on the air control P.C. board. Replace or repair the damaged pins. Connect the connector. This solves the problem.

   Yes ↓ **No** → Go to step 10.

9. Go to “Final Actions” on page 2-17.

10. Replace the air control P.C. board (refer to procedure 4.9).

    This solves the problem.

Yes ↓ **No** → Replace the sensor control P.C. board (refer to procedure 4.7). If this solves the problem, go to “Final Actions” on page 2-17. Otherwise, call Hill-Rom Technical Support at (800) 445-3720.

11. Go to “Final Actions” on page 2-17.

2.18 ZoneAire® Sleep Surface Mattress Disconnected— Error Code 2-5

The possible cause of this error is that the electrical connection between the control circuit and the pressure sensing circuit is disconnected.

CAUTION:
To prevent component damage, ensure that your hands are clean, and handle the P.C. boards by their edges **only**.

CAUTION:
When working with electronics, wear an appropriate static strap. Equipment damage can occur.

1. Unplug the bed from its power source. Check the main connector (A) under the foot section of the bed for bent or recessed pins (see figure 2-9 on page 2-40). Also check J/P131 and J/P114 for bent or recessed pins. Replace or repair the damaged pins. Connect the connector, and connect the bed to its power source. Press the sleep *surface power* switch and wait about 6 seconds. Error code 2-5 appears.

   This solves the problem.

   Yes ↓ **No** → Go to step 3.

2. Go to “Final Actions” on page 2-17.

SHOCK HAZARD:
High voltage is present. Use extreme care, or personal injury could occur.

3. Take the following steps:
   a. Remove the two Torx®[1] head screws, and loosen the two remaining Torx® head screws on top of the seat section portion of the sleep surface.
   b. Place the seat section on either the head or foot sleep surface.
   c. Connect the black probe of the VOM to the anode end of D16 (B) located on the air control P.C. board (see figure 2-10 on page 2-43).

1. Torx® is a register trademark of Textron, Inc.

2

d. Initiate the self-diagnostics test (see “Air System Self-Diagnostic Test” on page 2-15).

e. Connect the red probe of the VOM to pin 1 on J/P114 (A). The voltage is greater than 8V DC.

Yes ↓

No → Replace the air control P.C. board (refer to procedure 4.9). If this solves the problem, go to “Final Actions” on page 2-17. Otherwise, go to step 4.

Figure 2-10. Air Control P.C. Board

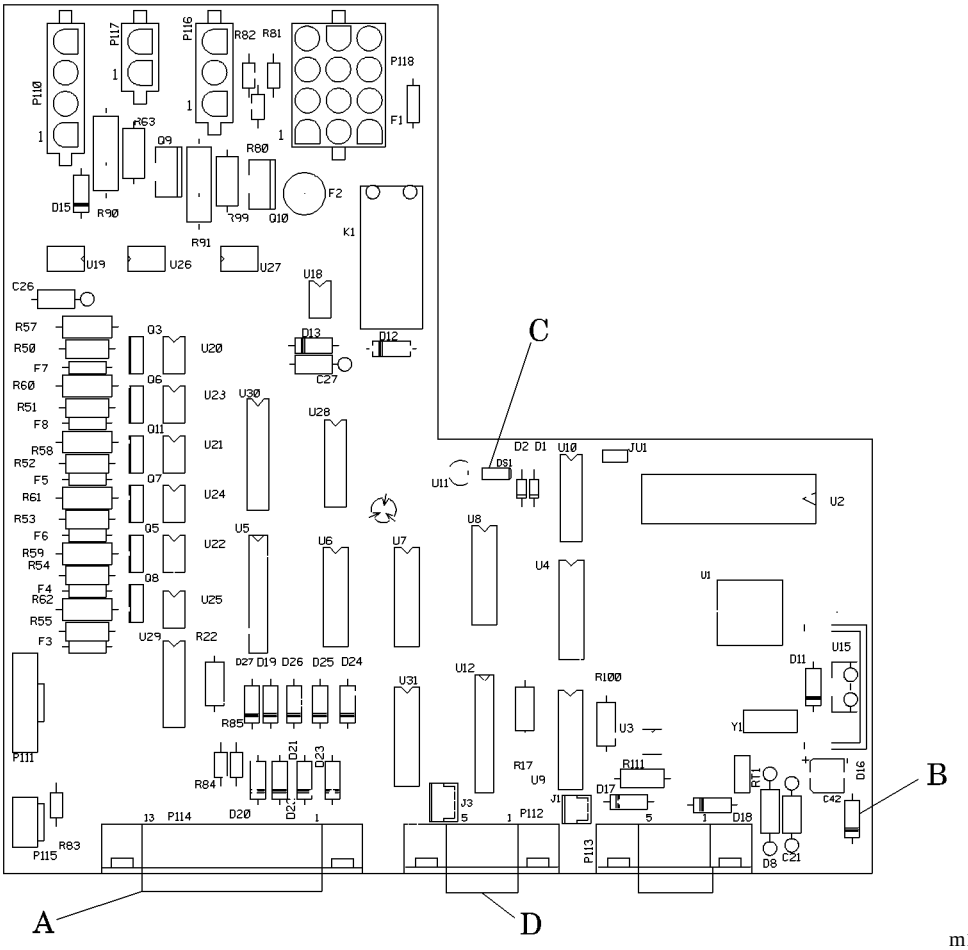

4. With the black probe of the VOM still connected to the anode end of D16 (B), initiate the self-diagnostics test (see “Air System Self-Diagnostic Test” on page 2-15). Put the red probe of the VOM on pin 13 of J/P114 (A). The voltage is greater than 4V DC.

Yes **No**
↓ → Go to step 7.

5. Replace the air control P.C. board (refer to procedure 4.9).

   This solves the problem.

   Yes **No**
   ↓ → Go to step 7.

6. Install all covers, and return the bed to operating condition. Go to "Final Actions" on page 2-17.

7. Take the following steps:

   a. Open the mattress cover to gain access to the components in the foot end of the mattress (see "ZoneAire® Sleep Surface" on page 1-14).

   b. Remove the control board cover (A) from the control board frame (B) (see figure 4-7 on page 4-20).

   c. Connect the black probe of the VOM to the negative lead of C6 (B) on the sensor P.C. board (see figure 2-11 on page 2-45).

   d. Initiate the self diagnostics test (see "Air System Self-Diagnostic Test" on page 2-15).

   e. Connect the red probe of the VOM to the cathode end of D2 (C). The voltage is greater than 8V DC.

   Yes **No**
   ↓ → Check the mattress cable for continuity. Replace the cable if required.

8. With the black probe of the VOM still connected to the negative lead of C6 (B), initiate the self diagnostics test (see "Air System Self-Diagnostic Test" on page 2-15). Put the red probe of the VOM on pin 13 of J/P131 (A). The voltage is greater than 4V DC.

   Yes **No**
   ↓ → Replace the mattress sensor control P.C. board (refer to procedure 4.7). If this solves the problem, go to "Final Actions" on page 2-17. Otherwise, call Hill-Rom Technical Support at (800) 445-3720.

9. Go to "Final Actions" on page 2-17.

2

Figure 2-11. Sensor Control P.C. Board

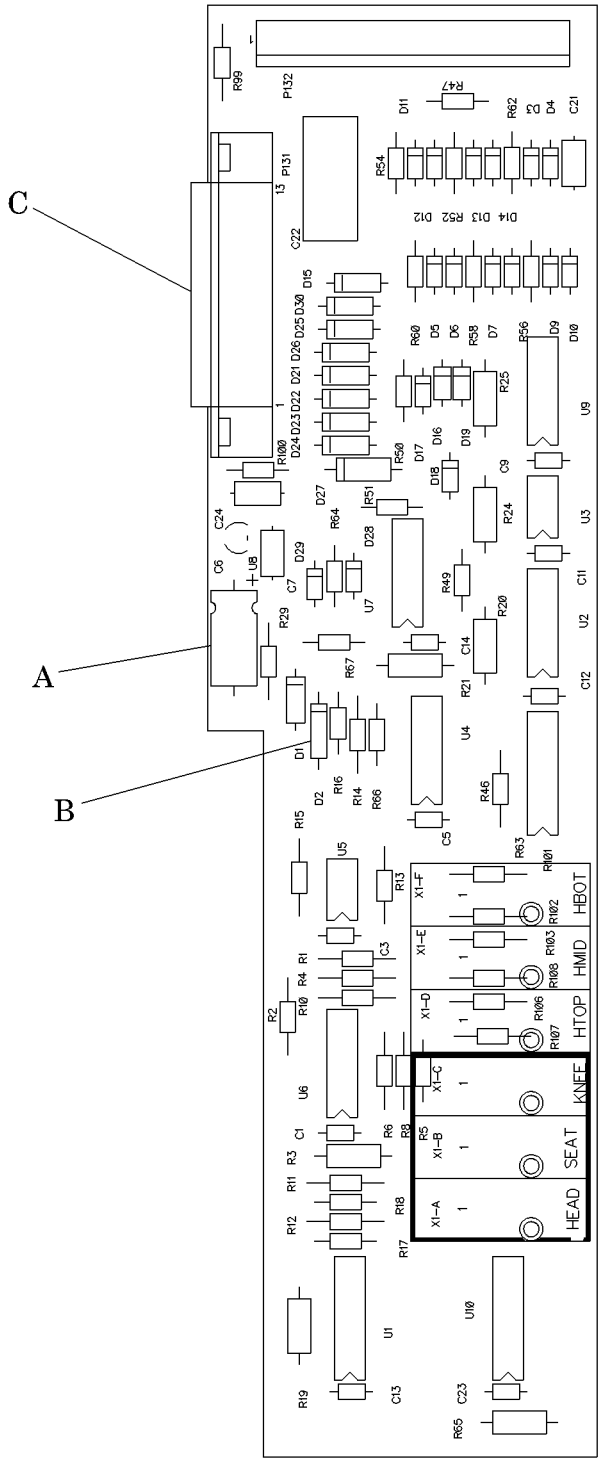

m168_167

2.19 ZoneAire® Sleep Surface Triac Open—Error Code 2-6

SHOCK HAZARD:
Unplug the bed from its power source. Failure to do so could result in personal injury or equipment damage.

CAUTION:
To prevent component damage, ensure that your hands are clean, and handle the P.C. boards by their edges **only**.

CAUTION:
When working with electronics, wear an appropriate static strap. Equipment damage can occur.

1. Take the following steps:
   a. Unplug the bed from its power source.
   b. Raise the sleep surface.
   c. Disconnect the sensor control surface cables (A) (see figure 2-9 on page 2-40).
2. Plug the bed into its power source, and perform the "Air System Self-Diagnostic Test" on page 2-15. The pump passes this test, but all the valves do not.

   Yes ↓ **No** → Go to step 11.

SHOCK HAZARD:
Unplug the bed from its power source. Failure to do so could result in personal injury or equipment damage.

3. Take the following steps:
   a. Unplug the bed from its power source.
   b. Remove the mattress from the bed (see "Air Sleep Surface Mattress" on page 4-17).

c. Remove the two Torx®[1] head screws, and loosen the two remaining Torx® head screws on top of the seat section portion of the sleep surface.

d. Remove the footboard (see “Footboard” on page 4-7).

e. Remove the foot end cover from the bed (see “Foot End Cover” on page 4-9).

f. Using a 3/8" nutdriver, remove the nut (D) securing the circuit board pan (E) (see figure 4-11 on page 4-32).

g. To access the transformer (C), carefully lift the circuit board pan (E).

h. Inspect the transformer wiring assembly (A). Repair any broken or damaged wires.

4. Disconnect and then connect the transformer wiring assembly connector J/P118 to the air control P.C. board (see figure 2-10 on page 2-43). Plug the bed into its power source, and perform the “Air System Self-Diagnostic Test” on page 2-15. The pump passes this test, but all the valves do not.

Yes ↓ **No** → Return the bed to its normal operating condition. Go to “Final Actions” on page 2-17.

5. Disconnect connector J/P 118 and measure the AC voltage between pins 3 and 12 (see figure 2-12 on page 2-47). The voltage is greater than 20V AC.

Yes ↓ **No** → Go to step 8.

Figure 2-12. Connector J/P118 Pins

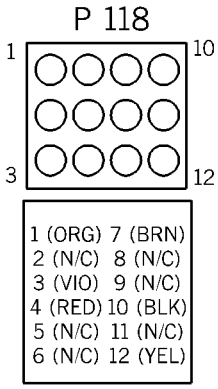

m168_168

6. Replace the air control P.C. board (refer to procedure 4.9).

1. Torx® is a register trademark of Textron, Inc.

This solves the problem.

Yes **No**
↓ → Go to step 8.

7. Return the bed to its normal operating condition. Then go to “Final Actions” on page 2-17.

8. Measure the AC voltage between pins 10 and 1 on the connector J/P118. The voltage is greater than 100V AC.

   Yes **No**
   ↓ → Replace fuse F2 on the air control P.C. board. If this solves the problem, return the bed to its normal operating condition. Then go to “Final Actions” on page 2-17; otherwise, go to step 9.

9. Replace the air control P.C. board (refer to procedure 4.9).

   This solves the problem.

   Yes **No**
   ↓ → Go to step 12.

10. Return the bed to its normal operating condition. Then, go to “Final Actions” on page 2-17.

11. All eight sleep surface LEDs are flashing.

    Yes **No**
    ↓ → Replace the air control P.C. board (refer to procedure 4.9). If this solves the problem, return the bed to its normal operating conditions and go to “Final Actions” on page 2-17. Otherwise, go to step 12.

12. Disconnect connector J/P110 and inspect the air control P.C. board wiring assembly (see figure 2-10 on page 2-43). Repair any broken or damaged wires.

13. Connect the air control P.C. board wiring assembly to connector J/P110. Perform the “Air System Self-Diagnostic Test” on page 2-15. All eight LEDs are flashing.

    Yes ↓ **No** → If this solves the problem, return the bed to its normal operating condition and then go to “Final Actions” on page 2-17. Otherwise, go to step 14.

14. Measure the AC voltage between pins 1 and 2 on J/P110 (see figure 2-13 on page 2-49). The voltage is greater than 100V AC.

    Yes ↓ **No** → Go to step 17.

Figure 2-13. J/P110 Connector

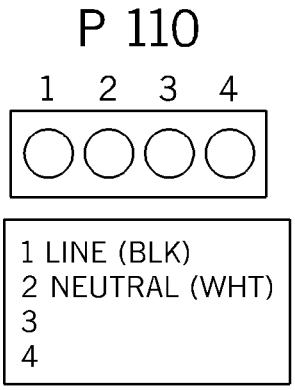

m168_169

15. Replace the air control P.C. board (refer to procedure 4.9).

    This solves the problem.

    Yes ↓ **No** → Go to step 17.

16. Return the bed to its normal operating condition. Then, go to “Final Actions” on page 2-17.

17. Remove the foot end cover from the bed (see “Foot End Cover” on page 4-9). Measure the V AC between pins 1 and 2 on J/P14 (A) located on the power supply P.C. board (see figure 2-14 on page 2-51). The voltage is greater than 100V AC.

Yes **No**
↓ → Check the following:

- the line filter connections
- the power plug connections
- the power source. If either of these solves the problem, return the bed to its normal operating condition. Then go to "Final Actions" on page 2-17; otherwise, go to step 20.

18. Replace the power cable (refer to procedure 4.16). This solves the problem.

    Yes **No**
    ↓ → Go to step 20.

19. Return the bed to its normal operating condition. Then, go to "Final Actions" on page 2-17.

20. Measure the V DC between pins 1 and 3 on J/P8 (B) located on the power supply P.C. board. The voltage is greater than 11V DC.

    Yes **No**
    ↓ → Inspect the connector J/P8 for bent or recessed pins. Replace or repair damaged pins. If this solves the problem, return the bed to its normal operating condition and then go to "Final Actions" on page 2-17. Otherwise, go to step 21.

21. Replace fuse F2 (C) on the power supply P.C. board. This solves the problem.

    Yes **No**
    ↓ → Call Hill-Rom Technical Support at (800) 445-3720.

22. Return the bed to its normal operating condition. Go to "Final Actions" on page 2-17.

2

Figure 2-14. Power Supply P.C. Board

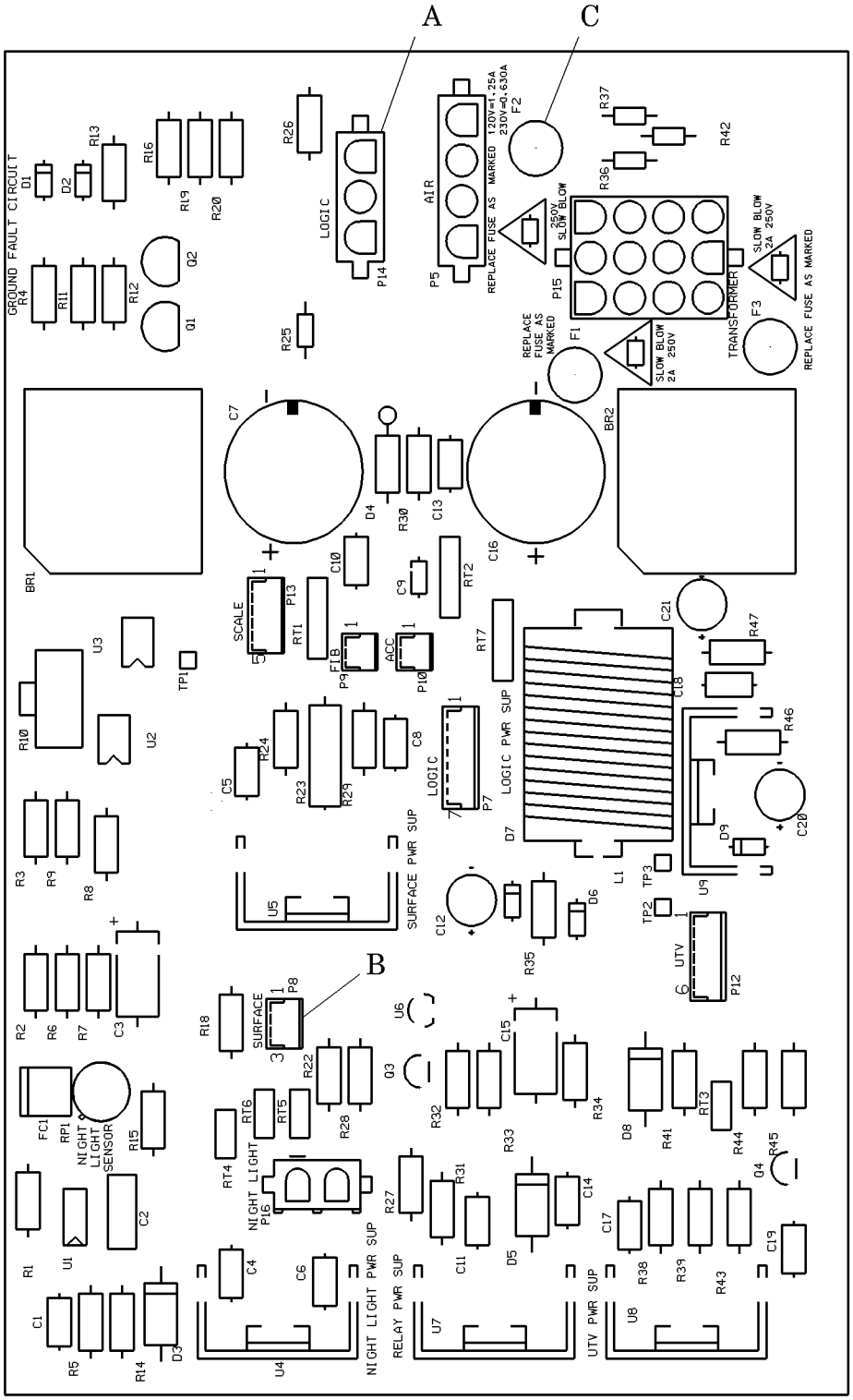

m168_117

2.20 ZoneAire® Sleep Surface LON Communication Error— Error Code 2-7

SHOCK HAZARD:
Unplug the bed from its power source. Failure to do so could result in personal injury or equipment damage.

CAUTION:
To prevent component damage, ensure that your hands are clean, and handle the P.C. boards by their edges **only**.

CAUTION:
When working with electronics, wear an appropriate static strap. Equipment damage can occur.

1. Take the following steps:
   a. Unplug the bed from its power source.
   b. Remove the mattress from the bed (see “Air Sleep Surface Mattress” on page 4-17).
   c. Remove the two Torx®[1] head screws, and loosen the two remaining Torx® head screws on top of the seat section portion of the sleep surface.
   d. Place the seat section on either the head or foot sleep surface.
2. Inspect the connector J/P1 (A) on the air control P.C. board for broken, bent, or missing pins (see figure 2-15 on page 2-53). Repair or replace broken, bent, or missing pins. Connect the connector. This solves the problem.

   Yes ↓ **No** → Go to step 4.
3. Go to “Final Actions” on page 2-17.

1. Torx® is a register trademark of Textron, Inc.

Figure 2-15. Connector J/P1 and J/P3 on the Air Control P.C. Board

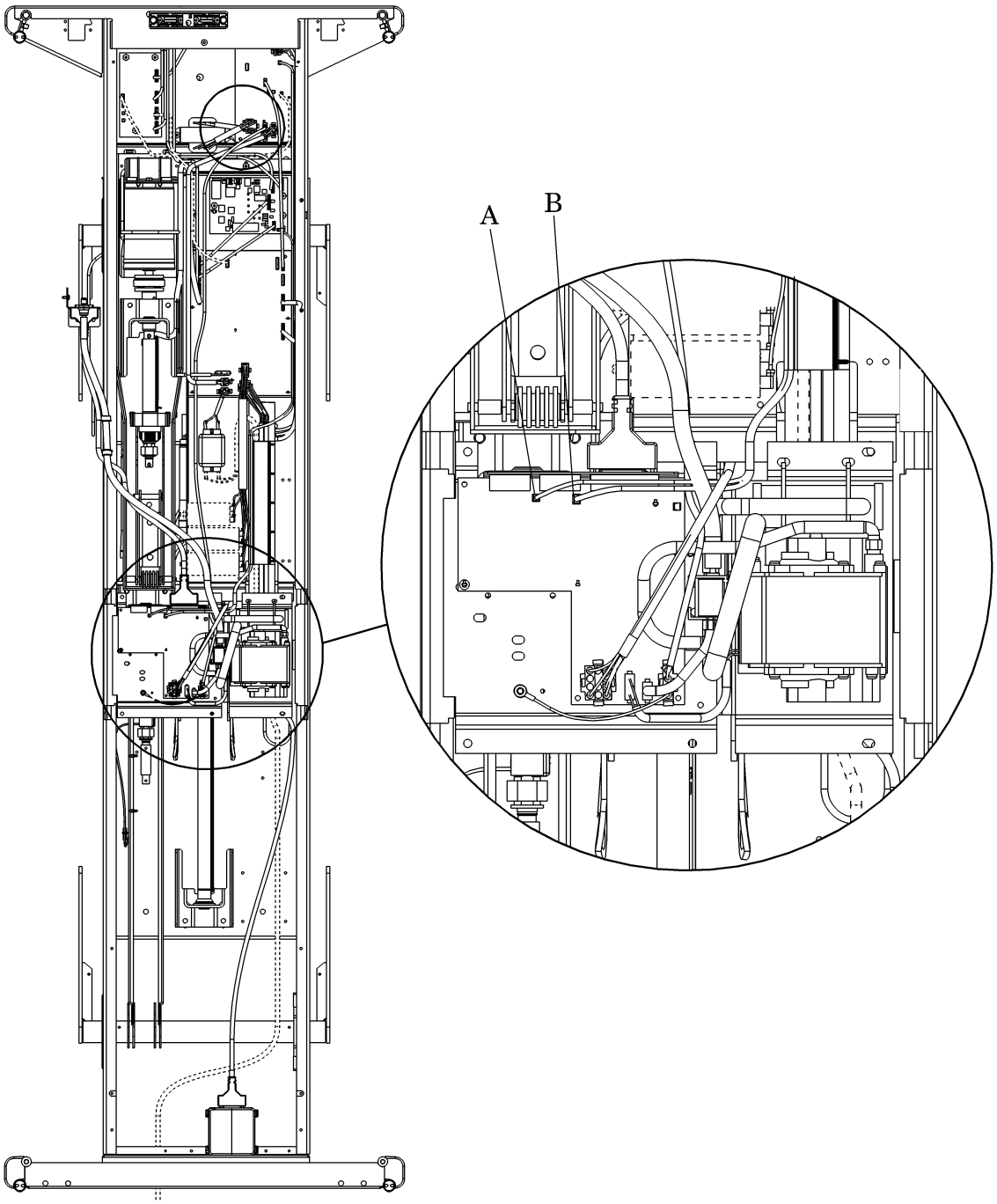

m168_173

4. Inspect for broken, bent, or missing pins on connector J/P1 (C) on the ZoneAire® interface P.C. board (see figure 6 on page 2-54). Repair or replace the broken, bent, or missing pins. This solves the problem.

   Yes ↓ **No** → Go to step 6.

5. Go to "Final Actions" on page 2-17.

6. Check for DC power at the J/P3 (B) connector on the air control P.C. board (see figure 2-15 on page 2-53). DC power is available to the air control P.C. board.

   Yes ↓ **No** → Replace the power supply control P.C. board (refer to procedure 4.34). If this solves the problem, go to "Final Actions" on page 2-17. Otherwise, call Hill-Rom Technical Support at (800) 445-3720.

7. Replace the air control P.C. board (refer to procedure 4.9).

   This solves the problem.

   Yes ↓ **No** → Go to step 9.

8. Go to "Final Actions" on page 2-17.

9. Replace the ZoneAire® interface P.C. board (see figure 5-10 on page 5-28, or see "11" on page 5-29).

   This solves the problem.

   Yes ↓ **No** → Go to step 11.

10. Go to "Final Actions" on page 2-17.

11. Replace the (local operating network) LON cable.

    This solves the problem.

    Yes ↓ **No** → Go to step 13.

12. Go to "Final Actions" on page 2-17.

13. Replace the power supply control P.C. board (refer to procedure 4.34).

    This solves the problem.

Yes ↓ **No** → Call Hill-Rom Technical Support at (800) 445-3720.

14. Go to “Final Actions” on page 2-17.

Figure 2-16. Connector J/P1 on the ZoneAire® Interface P.C. Board

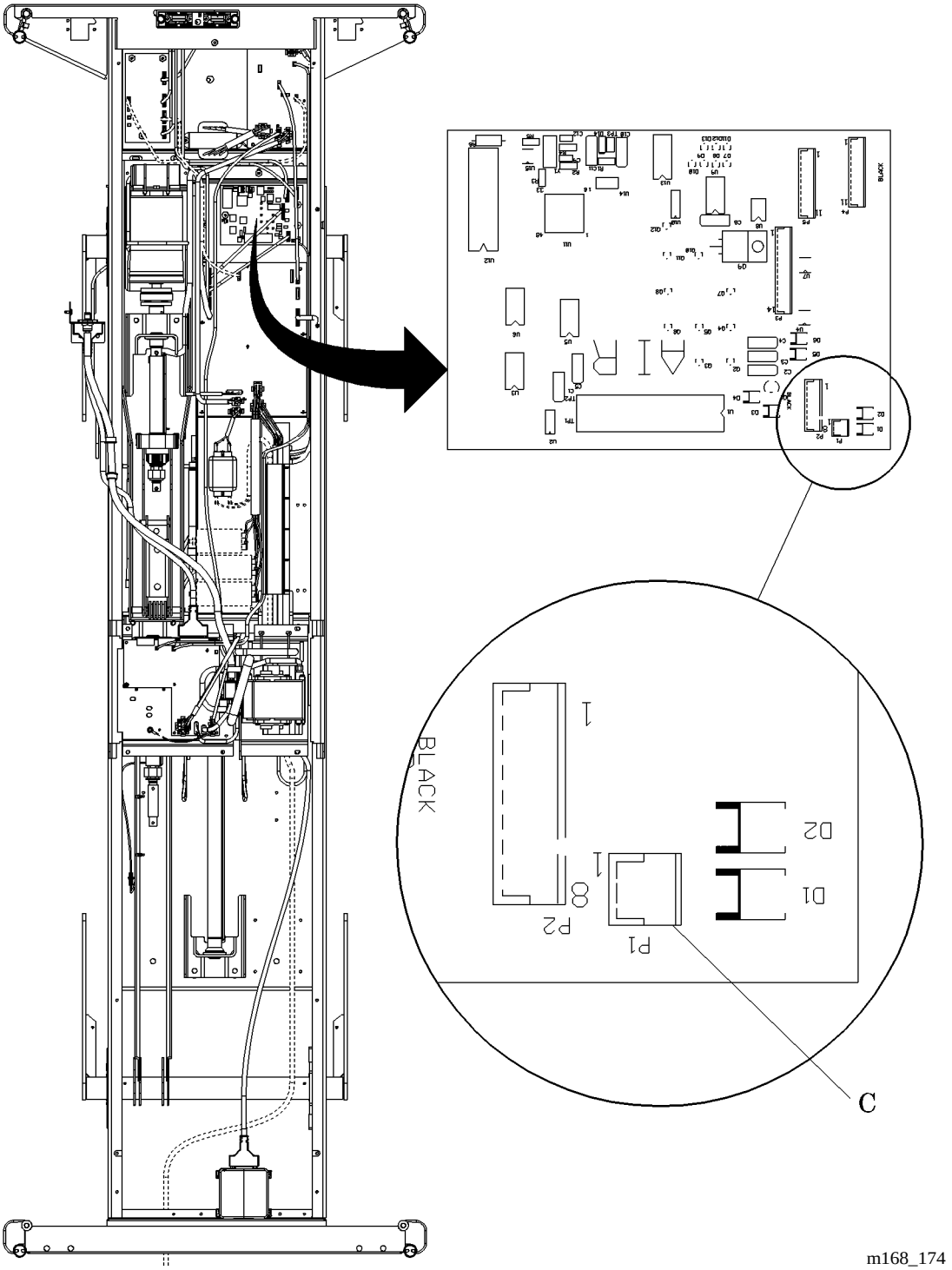

2.21 Key Stuck Closed—Error Code 1-2

CAUTION:
To prevent component damage, ensure that your hands are clean, and handle the P.C. boards by their edges **only**.

CAUTION:
Wear an appropriate static strap when working with electronics. Equipment damage can occur.

1. Replace the key panel (refer to procedure 4-13).

2. Go to “Final Actions” on page 2-17..

2.22 ZoneAire® Sleep Surface Does Not Work

SHOCK HAZARD:
Unplug the bed from its power source. Failure to do so could result in personal injury or equipment damage.

CAUTION:
To prevent component damage, ensure that your hands are clean, and handle the P.C. boards by their edges **only**.

CAUTION:
When working with electronics, wear an appropriate static strap. Equipment damage can occur.

1. Take the following steps:
   a. Unplug the bed from its power source.
   b. Remove the footboard (see “Footboard” on page 4-7).
   c. Remove the mattress from the bed (see “Air Sleep Surface Mattress” on page 4-17).
   d. Remove the two Torx®[1] head screws, and loosen the two remaining Torx® head screws on top of the seat section portion of the sleep surface.
   e. Place the seat section on either the head or foot sleep surface.
   f. Install the footboard (see “Footboard” on page 4-7).
   g. Plug the bed into an appropriate power source.
2. The LED, DS1 (C) on the air control P.C. board is flashing (see figure 2-10 on page 2-43).

   Yes ↓ **No** → Go to step 4.
3. Replace the air control P.C. board (refer to procedure 4.9).

   This solves the problem.

   Yes ↓ **No** → Go to step 5.

1. Torx® is a register trademark of Textron, Inc.

4. Go to “Final Actions” on page 2-17.

5. Connect the black probe of the VOM to the anode end of D16 (B) and the red probe to J/P112, Pin 2 (D) located on the air control P.C. board (see figure 2-10 on page 2-43). The voltage measures 8V DC or more.

   Yes ↓ **No** → Go to step 14.

6. Replace the (local operating network) LON cable.

   This solves the problem.

   Yes ↓ **No** → Go to step 8.

7. Return the bed to its normal operating condition, and go to “Final Actions” on page 2-17.

8. Replace the key panel (refer to procedure 4-13).

   This solves the problem.

   Yes ↓ **No** → Go to step 10.

9. Return the bed to its normal operating condition, and go to “Final Actions” on page 2-17.

10. Replace the air control P.C. board (refer to procedure 4.9).

    This solves the problem.

    Yes ↓ **No** → Go to step 12.

11. Return the bed to its normal operating condition, and go to “Final Actions” on page 2-17.

12. Replace the CPR limit switch assembly (refer to procedure 4.28).

    This solves the problem.

    Yes ↓ **No** → Go to step 14.

13. Return the bed to its normal operating condition, and go to “Final Actions” on page 2-17.

14. Measure the AC voltage between pin 1 and pin 3 of J/P14 (A) on the power supply P.C. board (see figure 2-14 on page 2-51). The voltage measures 100V AC or more.

    Yes ↓ **No** → Replace the power supply control P.C. board (refer to procedure 4.34). If this solves the problem, go to "Final Actions" on page 2-17. Otherwise, call Hill-Rom Technical Support at (800) 445-3720.

15. Measure the DC voltage between pin 1 and pin 3 of J/P8 (B) on the power supply P.C. board. The voltage measures greater than 11V DC.

    Yes ↓ **No** → Go to step 18.

16. Replace the LON cable.

    This solves the problem.

    Yes ↓ **No** → Go to step 18.

17. Return the bed to its normal operating condition, and go to "Final Actions" on page 2-17.

18. Replace the power supply control P.C. board (refer to procedure 4.34).

    This solves the problem.

    Yes ↓ **No** → Call Hill-Rom Technical Support at (800) 445-3720.

19. Return the bed to its normal operating condition, and go to "Final Actions" on page 2-17.

2.23 Scale Display—Err0, Err1, Err2 or Err3 Displayed

CAUTION:
To prevent component damage, ensure that your hands are clean, and handle the P.C. boards by their edges **only**.

CAUTION:
When working with electronics, wear an appropriate static strap. Equipment damage can occur.

NOTE:
If the bed is in the correct weigh position, the scale will display *0.0* followed by the correct weight reading.

1. When the bed is first turned on, the scale displays four dashes *(----)*, beeps five times, and no buttons function properly.

   Yes ↓ **No** → Go to step 4.

2. The EPROM is not functioning properly. Replace or repair the EPROM.

   This solves the problem

   Yes ↓ **No** → Go to step 4.

3. Go to “Final Actions” on page 2-17.

4. An *Err0*, *Err1*, *Err2* or *Err3* appears on the scale display.

   Yes ↓ **No** → Bed is turned off (see *On/Off* button). If this solves the problem, go to “Final Actions” on page 2-17. Otherwise, call Hill-Rom Technical Support at (800) 445-3720.

5. Go to “Err0” on page 2-61, “Err1” on page 2-62, “Err2” on page 2-62, or “Err3” on page 2-62 as appropriate. If this solves the problem, go to “Final Actions” on page 2-17. Otherwise, call Hill-Rom Technical Support at (800) 445-3720.

Err0

1. The scale alternately displays *Err0* and ---- . Connect the analog board cable or replace it.

This solves the problem.

Yes ↓ **No** → Call Hill-Rom Technical Support at (800) 445-3720.

2. Go to “Final Actions” on page 2-17.

Err1

1. The scale displays *Err1* and beeps ten times. An error has occurred during the memory check. Calibrate the scale to correct this problem (refer to procedure).

   This solves the problem.

   Yes ↓ **No** → The Advanta™ Bed scale can compensate for items that are added to or removed from the bed. Use the scale control panel to add or remove items on the bed (see “Changing Items on the Bed” on page 1-38). Check the scale calibration procedures again (refer to procedure). If this solves the problem, go to “Final Actions” on page 2-17. Otherwise, call Hill-Rom Technical Support at (800) 445-3720.

2. Go to “Final Actions” on page 2-17.

Err2

1. The scale displays *Err2* and beeps ten times. The scale has never been calibrated. Calibrate the scale to correct this problem (refer to procedure).

   This solves the problem.

   Yes ↓ **No** → The Advanta™ Bed scale can compensate for items that are added to or removed from the bed. Use the scale control panel to add or remove items on the bed (see “Changing Items on the Bed” on page 1-38). Check the scale calibration procedures again (refer to procedure). If this solves the problem, go to “Final Actions” on page 2-17. Otherwise, call Hill-Rom Technical Support at (800) 445-3720.

2. Go to “Final Actions” on page 2-17.

Err3

1. The scale alternately displays *Err3* and a *PX* code. The *X* refers to a connection number from 1 through 4 on the analog P.C. board. Check this

connection displayed on the analog P.C. board (see figure 5-3 on page 5-12).

NOTE:
The load beams connect to P1 through P4 on the analog P.C. board.

This solves the problem.

Yes ↓ **No** → Make sure that the load beam gap is not closed. If this solves the problem, go to "Final Actions" on page 2-17. Otherwise, go to step 3.

2. Go to "Final Actions" on page 2-17.

3. The load beam may be disconnected, not plugged in correctly, or defective. Connect or replace the load beam (refer to procedure 4.38).

   This solves the problem.

   Yes ↓ **No** → Call Hill-Rom Technical Support at (800) 445-3720.

4. Go to "Final Actions" on page 2-17.

2.24 Patient Position Monitor (PPM) Does Not Function

1. The Advanta™ Bed must be zeroed upon delivery. To determine if the bed needs zeroed, check the following list, answering yes or no for each statement:
   - The patient's weight is between 70 lb and 450 lb (32 kg to 204 kg) for the PPM system to activate.
   - The PPM system will not arm in any of the three modes.
   - The bottom *Out of Bed* light begins flashing before turning off the PPM.
2. If the answer to **all** of the statements is yes, the bed must be zeroed.
   a. If the bed does not have a scale, see "Zeroing for the Out of Bed Mode (Beds Without Scales)" on page 1-36.
   b. If the bed has a scale, see "Zeroing the Scale" on page 1-38.

2.25 Patient Position Monitor (PPM) System Beeps Twice and Flashes LEDs

The Patient Position Monitor (PPM) system beeps twice, flashes LEDs on the PPM control panel, and shuts off after trying to arm.

If the Position LED is flashing, proceed to step 1. If the Exiting LED is flashing, proceed to step 12. If the Out-Of-Bed LED is flashing, proceed to step 26.

> **NOTE:**
> It is possible for all three LEDs to be flashing at the same time.

If all three LEDs are flashing at one time, proceed to step 1. Continue as needed.

If there is an error code on the scale display, the PPM system will not arm.

Position LED

1. The Position LED is flashing. See “Zeroing for the Out of bed Mode (Beds Without Scales) for beds without scales on page 1-34, or see “Zeroing the Scale” for beds with scales on page 1-35.

   This solves the problem.

   Yes ↓ **No** → Go to step 3.

2. Go go to “Final Actions” on page 2-16.

3. Ensure the patient is positioned properly on the bed.

   This solves the problem.

   Yes ↓ **No** → Go to step 5.

4. Go to “Final Actions” on page 2-16.

5. Ensure the mattress is one of the following: Comfortline®, ZoneAire® Sleep Surface System, ACUCAIR®, Eclipse®, Maxifloat®[1], or V-CUE™.

   This solves the problem.

   Yes ↓ **No** → Go to step 7.

1. Maxifloat® is a registered trademark of B.G. Industries, Inc.

6. Go to “Final Actions” on page 2-16.

7. Ensure the head elevation is less than 65° with proper mattress installed.

   This solves the problem.

   Yes ↓ **No** → Go to step 9.

8. Go to “Final Actions” on page 2-16.

9. Check all of the cable connections on the scale/PPM sensor P.C. board for being lose.

   This solves the problem.

   Yes ↓ **No** → Go to step 11.

10. Go to “Final Actions” on page 2-16.

11. Perform resistance check on head sensor. With no load on the sensor, the ohm value should be above 100k ohms. Apply pressure to the sensor, the ohms value goes down as more pressure is applied.

    Does the head sensor pass the resistance check.

    Yes ↓ **No** → Replace PPM head sensor per 4.39.

12. Replace the PPM micro board.

    This solves the problem.

    Yes ↓ **No** → Contact Hill-Rom Technical Support at (800) 445-3720.

13. Go to “Final Actions” on page 2-16.

Exiting LED

14. The Exiting LED is flashing. See “Zeroing for the Out of bed Mode (Beds Without Scales) for beds without scales on page 1-34, or see “Zeroing the Scale” for beds with scales on page 1-35.

    This solves the problem.

    Yes ↓ **No** → Go to step 16.

15. Go go to “Final Actions” on page 2-16.

16. Ensure the patient is positioned properly on the bed.

    This solves the problem.

    Yes ↓ **No** → Go to step 18.

17. Go to “Final Actions” on page 2-16.

18. Ensure the mattress is one of the following: Comfortline®, ZoneAire® Sleep Surface System, ACUCAIR®, Eclipse®, Maxifloat®[1], or V-CUE™.

19. This solves the problem.

    Yes ↓ **No** → Go to step 20.

20. Go to “Final Actions” on page 2-16.

21. Ensure the head elevation is less than 65° with proper mattress installed.

    This solves the problem.

    Yes ↓ **No** → Go to step 22.

22. Go to “Final Actions” on page 2-16.

23. Perform resistance check on seat sensors. With no load on the sensor, ohm value should be above 100k ohms. Apply pressure to the sensor, the ohms value goes down as more pressure is applied.

    Does seat sensor pass ohms check?

    Yes ↓ **No** → Replace PPM seat sensor per 4.39.

24. Replace PPM micro P.C. board.

    This solves the problem.

    Yes ↓ **No** → Contact Hill-Rom Technical Support at (800) 445-3720.

25. Go to “Final Actions” on page 2-16.

1. Maxifloat® is a registered trademark of B.G. Industries, Inc.

Out-Of-Bed LED

26. The Out-of-bed LED is flashing. See “Zeroing for the Out of bed Mode (Beds Without Scales) for beds without scales on page 1-34, or see “Zeroing the Scale” for beds with scales on page 1-35.

    This solves the problem.

    Yes ↓ **No** → Go to step 28.

27. Go to “Final Actions” on page 2-16.

28. Verify that the bed is not hitting any obstructions.

    This solves the problem.

    Yes ↓ **No** → Go to step 29.

29. Go to “Final Actions” on page 2-16.

30. Verify that the weight on the bed is between 70 and 450 lb. (32-204 kg).

    This solves the problem.

    Yes ↓ **No** → Contact Hill-Rom Technical Support at (800) 445-3720.

31. Go to “Final Actions” on page 2-16.

2.26 SideCom® Communication System Tester

The SideCom® Communication System tester (P/N SA5002) checks the control functions of the siderail communication system on a SideCom® Communication System equipped bed (see figure 2-17 on page 2-69). The tester connects to the bed's communication cable (P379) and siderail cable.

Figure 2-17. SideCom® Communication System Tester

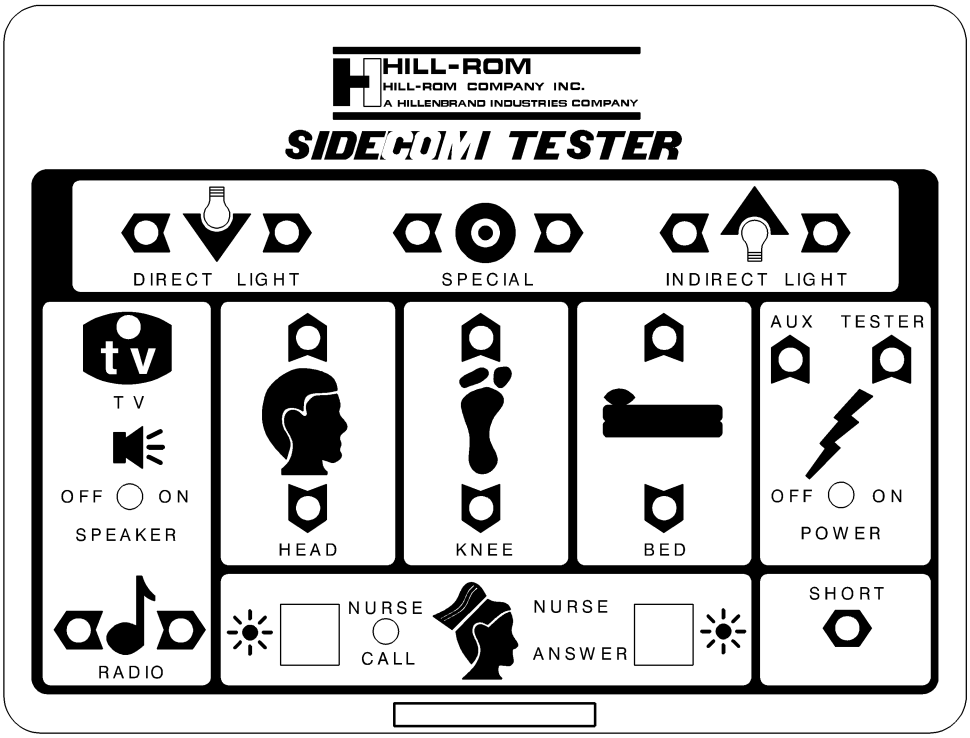

m168a181

Connecting SideCom® Communication System Tester For Operation

To operate the SideCom® Communication System tester, perform the following steps:

1. Disconnect the P379 cable from the wall.
2. Connect the P379 cable to the SideCom® Communication System tester.
3. Connect the tester to a standard 110V AC outlet.
4. Turn the tester power switch to the on position.

NOTE:
All of the tester lights should be off except for the tester power and auxiliary power lights.

Testing with SideCom® Communication System Tester

NOTE:
Operating the *Head—Knee—Hilow* switch from the siderail will **not** turn on the corresponding lamp on the tester. These three functions do not operate with the Advanta™ Bed.

NOTE:
This testing procedure is only valid for the Universal Television configuration only. If the SideCom® Communication System is not Universal Television modified, contact Hill-Rom Technical Support for troubleshooting procedures.

1. Operate the *Direct—Indirect* or *Radio* switch from the left siderail. The TV light on the SideCom® tester illuminates.

   Yes ↓ **No** → The fault is in the corresponding siderail or the cable to the siderail.

   Repeat this step for the right siderail.

NOTE:
Pressing the *radio* switch on either siderail will cause the left radio LED to illuminate. The right radio is not utilized with the Universal Television configuration.

2. Operate the TV, channel up, channel down and select switches from the left siderail. The TV light on the SideCom® Communication System Tester comes on.

NOTE:
Due to the nature of the Universal Television system, the LEDs will not simply go on or off. Instead the LEDs may flash at various rates, stay on as long as the switch is held, turn off after a predetermined time, or any combination mentioned. What is important for this troubleshooting procedure is to determine if pressing the TV, radio, channel up, channel down, or select switch causes a visible response on the TV LED on the SideCom® tester.

Yes ↓ **No** → The fault is in the corresponding siderail, the cable to the siderail, or the junction box.

Repeat this step for the right siderail.

3. Operate either the inside or outside *Nurse Call* from the left siderail. The *Nurse Call* light on the tester comes on when either switch is activated.

NOTE:
Pressing the *Nurse Call* switch from the siderail causes the call to be placed and then released, and is controlled by the bed system. The light will go on and off.

Yes **No**
↓ → The fault is in the corresponding siderail, the cable to the siderail, or the junction box.

Repeat this step for the right siderail.

4. Operate the *Nurse Answer* button on the tester. The yellow LED on the inside of both siderails is turned on.

Yes **No**
↓ → The fault is in the corresponding siderail, the cable to the siderail, or the junction box.

5. Operate the *Nurse Call* button on the tester. The amber LED on the inside of both siderails is turned on.

Yes **No**
↓ → The fault is in the corresponding siderail, the cable to the siderail, or the junction box.

NOTE:
The amber call LED on the siderail will be on at half brightness all of the time. The tester will only make the LED brighter.

6. Operate the *Speaker* switch on the tester. There is a continuous tone that is adjusted by the volume controls on the siderail.

Yes **No**
↓ → The fault is in the corresponding siderail, the cable to the siderail, or the junction box.

7. Go to “Final Actions” on page 2-16.

NOTES:

Chapter 3
Theory of Operation

Chapter Contents

3

3

NOTES:

Wiring Diagrams

The following wiring diagrams detail the electrical circuits and the circuit boards on the Advanta™ Bed. Use these diagrams as troubleshooting aids.

Figure 3-1. Scale Display P.C. Board P/N 63344

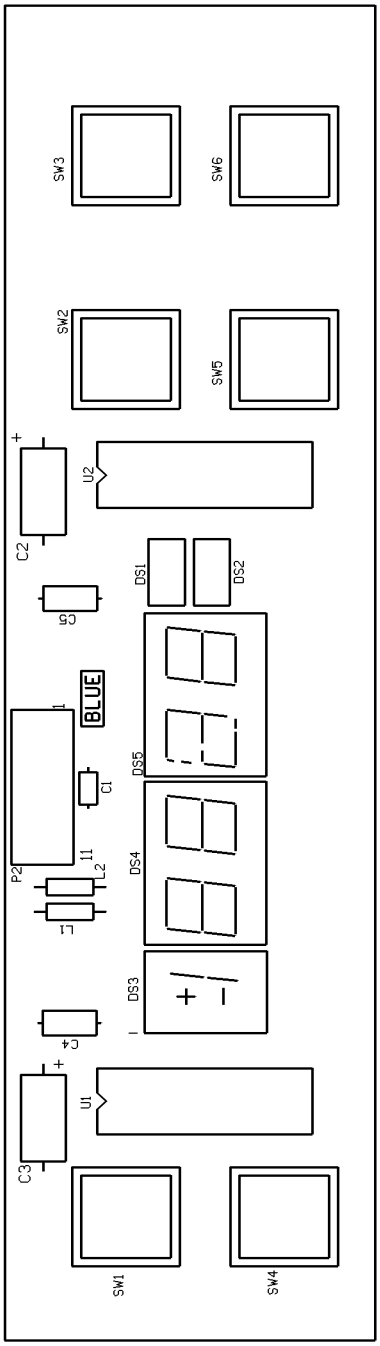

m168_108

Figure 3-2. Inner Patient #2 P.C. Board Assembly For Siderails P/N 63211 and P/N 67203

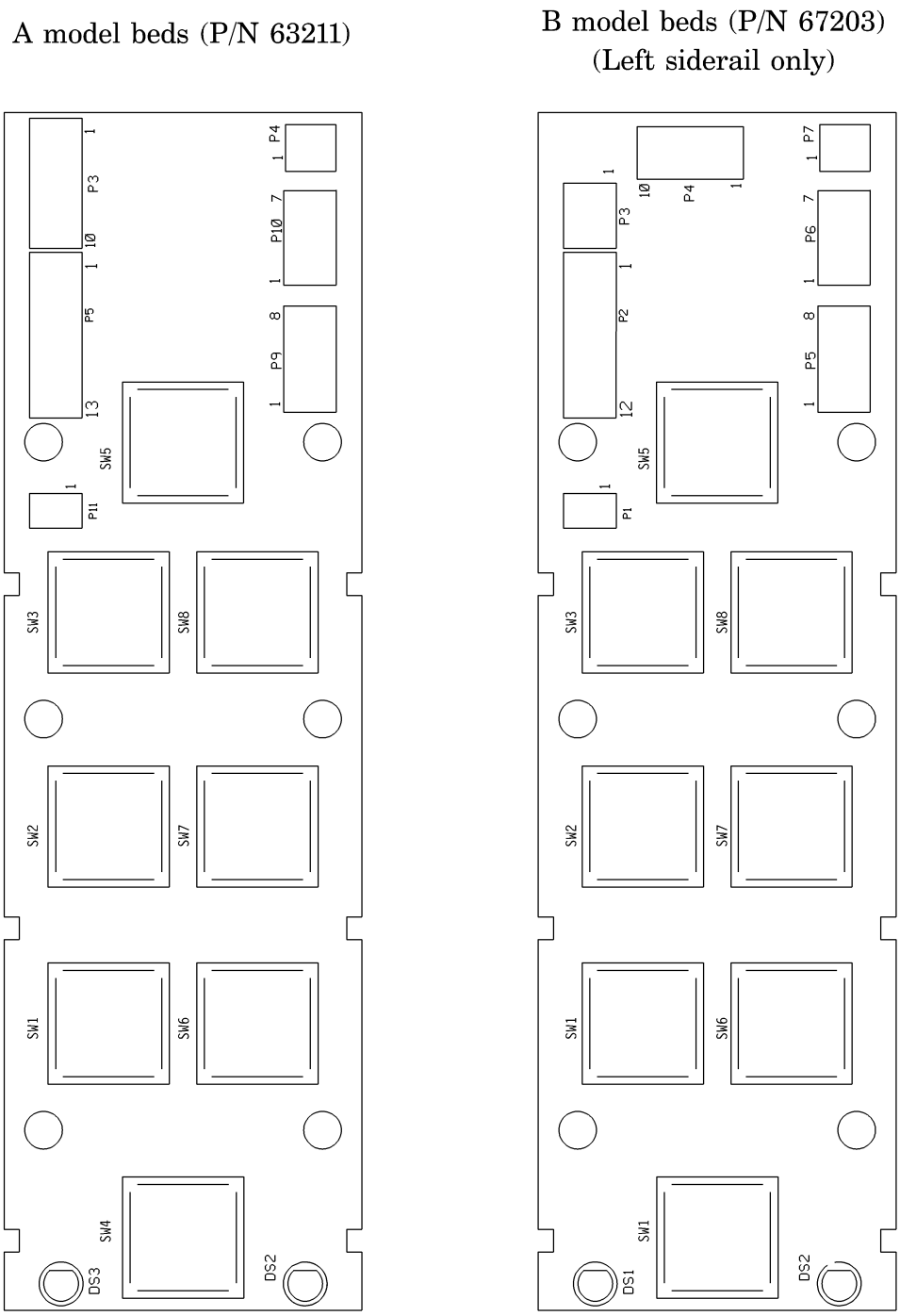

m168a104

Figure 3-3. Inner Patient #2 P.C. Board Wiring Diagram For Siderails P/N 63211

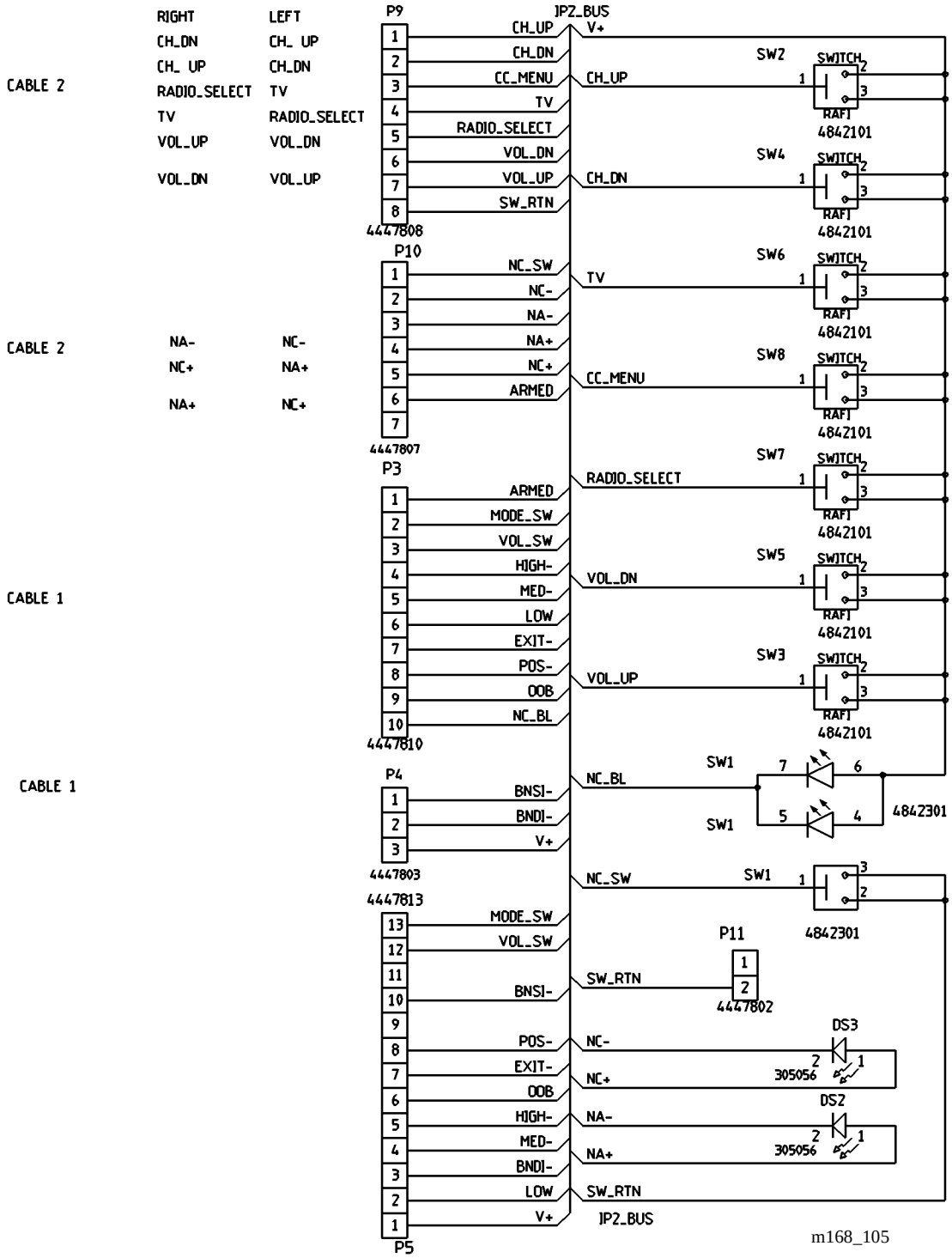

Figure 3-4. Footboard Function Switch Footboard LED P/N 63280

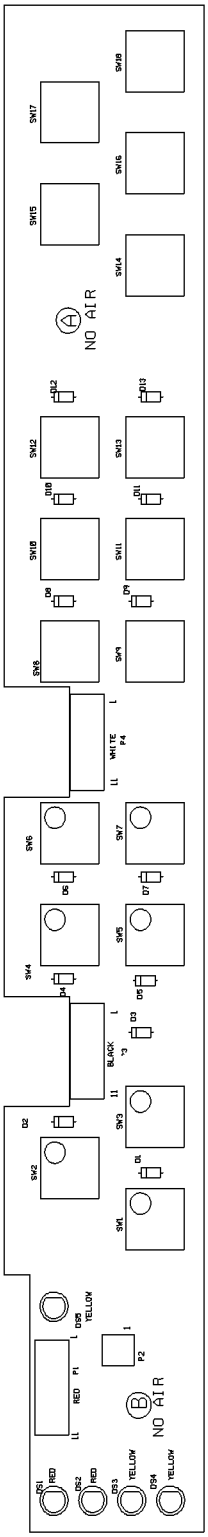

m168_110

Figure 3-5. Scale/Bed Exit Analog Board PN 4975102

Refer to fold-out FO 3-1 at the rear of this manual.

Figure 3-6. Patient Switch Board PN 63208

Refer to fold-out FO 3-2 at the rear of this manual.

Figure 3-7. J-Box/UTV Board PN 64935

Refer to fold-out FO 3-3 at the rear of this manual.

Figure 3-8. Footboard Scale Switch/Display PN 63344

Refer to fold-out FO 3-4 at the rear of this manual.

Figure 3-9. Footboard Function Switch Footboard LED PN 63280

Refer to fold-out FO 3-5 at the rear of this manual.

Figure 3-10. ZoneAire® Switch Footboard LED Board PN 63276

Refer to fold-out FO 3-6 at the rear of this manual.

Figure 3-11. Logic Board PN 63285

Refer to fold-out FO 3-7 at the rear of this manual.

Figure 3-12. Power Board PN 63349

Refer to fold-out FO 3-8 at the rear of this manual.

Figure 3-13. Frame Interface Board PN 63352

Refer to fold-out FO 3-9 at the rear of this manual.

Figure 3-14. Scale/Bed Exit Control Board PN 63217

Refer to fold-out FO 3-10 at the rear of this manual.

Figure 3-15. ZoneAire® Interface Board PN 6339601

Refer to fold-out FO 3-11 at the rear of this manual.

Figure 3-16. Sensor Board PN 4474001

Refer to fold-out FO 3-12 at the rear of this manual.

Figure 3-17. Air Control Board PN 44760

Refer to fold-out FO 3-13 at the rear of this manual.

Figure 3-18. Head Sensor Assembly PN 63888

Refer to fold-out FO 3-14 at the rear of this manual.

Figure 3-19. Advanta™ Bed Wiring Diagram (A Model Beds)

Refer to fold-out FO 3-15 at the rear of this manual.

Figure 3-20. Hilow/Knee Sensor PN 63885

Refer to fold-out FO 3-16 at the rear of this manual.

Figure 3-21. Inner Patient II Board (B Model Beds) PN 67203

Refer to fold-out FO 3-17 at the rear of this manual.

Figure 3-22. Advanta™ Bed Wiring Diagram (B model beds)

Refer to fold-out FO 3-18 at the rear of this manual.

Theory of Operation

Logic Control P.C. Board—P/N 63285

The logic module consists of several assemblies connected together to produce the operation of four motors used in the bed frame. A caregiver control assembly, patient control assemblies, and the drive limit assemblies are contained in each bed frame. Each assembly is described with an explanation of functions and location in the bed.

The logic control P.C. board assembly, part number 63285, is the heart of the articulation system (see figure 3-23 on page 3-16) and (see figure 3-24 on page 3-17). Located on the retractable frame at the foot end of the bed, it is easily accessible under the dust cover. All motor control outputs are based on the logic control inputs received. The inputs received by logic control consist of the patient siderail control inputs on connector P13, the footboard interface inputs on connector P15, and the limit switch inputs on connectors P19 and P2. These signals represent the inputs to the combinatorial logic used to describe

bed operation. The outputs on connectors P7 and P12 are switched AC line voltages used to power the split-phase, AC, intermittent-duty motors.

All inputs to the logic control P.C. board are processed simultaneously and present the motors with power when conditions are correct. The logic control P.C. board is responsible for reacting to the inputs and providing the outputs when appropriate. Patient controls in the siderail consist of two assemblies, part numbers 63208 and 63211, and two cables, part numbers 30601 and 30602, which provide parallel format switch inputs to the logic control P.C. board and communications junction box.

Outputs of the logic control P.C. board consist of light emitting diode (LED) current sources to provide a visual indication of bed status. These signals are available on connector P16. There is an interlock to provide protection against bed operation when P16 or when any interconnection between P16 and the footboard is disconnected or removed.

The power supply interconnection on connector P17 provides the interface for relay power, logic regulator power, ground fault logic clock connections, and the two enable signals for night light operation and the entertainment system operation.

The COMposer® Communication System is connected to the logic control via connector P18 to provide the signals for bed information status that are presented to the COMposer® Communication System accessory.

A footboard interface P.C. board assembly, part number 63352, provides an interface between caregiver controls and the logic control P.C. board. This assembly is provided in a format to cover the standard bed frame, with and without a scale or Patient Position Monitoring (PPM). The air system bed frames, with and without a scale or PPM, require the assembly part number 63396. The interfaces provide a memory function for retention of lockout settings, a multiplexed switch input scheme to reduce wire count and complexity, and an interface to the logic control P.C. board. The footboard interface assemblies provide a simple diagnostic LED indicator to the bed, providing valuable feedback when troubleshooting. Caregiver controls, part numbers 63276 and 63280, are configured in a row/column format and present switch position information to the footboard control interface P.C. board. The interconnection is done at connectors P3 and P4 on the non-air footboard interface and at P4 and P5 on the air footboard interface.

Cabling assemblies within the logic module have a consistent theme of 1 to n wiring, where n is the number of positions of the connector. This allows the cabling to be of similar colors and use the color to identify position on the P.C.

board assemblies to reduce errors in servicing. The siderail cable, part number 63600, connects the siderail interface P.C. board and the logic control P.C. board. This cable, with its multi-colored wires, is an exception to the single color rule. Due to its round jacket construction, the cable must be constructed of multiple colors.

Power is applied to the logic control P.C. board on connector P11 via a power noise filter and a molded plug power cord arrangement. The AC input is applied first to the logic control P.C. board via power cord, part number 64017, and then connected to the power supply module via a two-conductor cable, part number 63715, on connector P9.

Capacitors that are used in the split-phase motor network are attached to the logic control P.C. board on connector P7 via a 9-position cable assembly, part number 64027. This allows the capacitors to be mounted remotely from the motors in a location on the retractable frame under the dust cover. This allows for ease of service on the motors and the capacitors.

The limit system inputs to the logic control P.C. board on connectors P19 and P2 are developed by the Hall effect/magnet sensors mounted on the intermediate frame of the bed on separate assemblies. There are a total of 14 sensors on four drives. There are two intermediate hilow sensors mounted on each of the bed up-and-down drives that allow for reverse trendelenburg and chair positioning above the low-low limit of the bed. This prevents interference between the bed members and associated bed parts. Each of the four drives has an upper and lower limit present to stop drive operation at the extremes. There is an additional contour limit on the head and knee drive to stop articulation at the contour limit points. The flip-flop cam on the Hilow drives is a deterministic limit to inform the logic that the bed frame is below or above the intermediate low limit for Reverse Trendelenburg, Trendelenburg, and chair positions.

There is an interconnection scheme for the limit system. The logic control P.C. board connects to a connector P.C. board via connector P19. The cable interface is part number 63718. The connector P.C. board, part number 63208, has three independent cables connected to it from each of the intermediate frame- mounted limit systems. The head hilow drive is connected with cable part number 6148701 and provides the limit signals for the head hilow drive system. The foot hilow is connected with cable part number 6148903 and provides the limit signals for the foot hilow drive system. The head drive assembly and CPR switch assembly are connected via cable part number 6148801, and provides the CPR switch input and the head drive limit switch signals.

An additional limit switch system resides on the retractable frame knee drive assembly. The logic control P.C. board is connected on P2 via cable, part number 6148701, to the knee limit system mounted in the knee drive.

Figure 3-23. Logic Control P.C. Board—Top P/N 63285

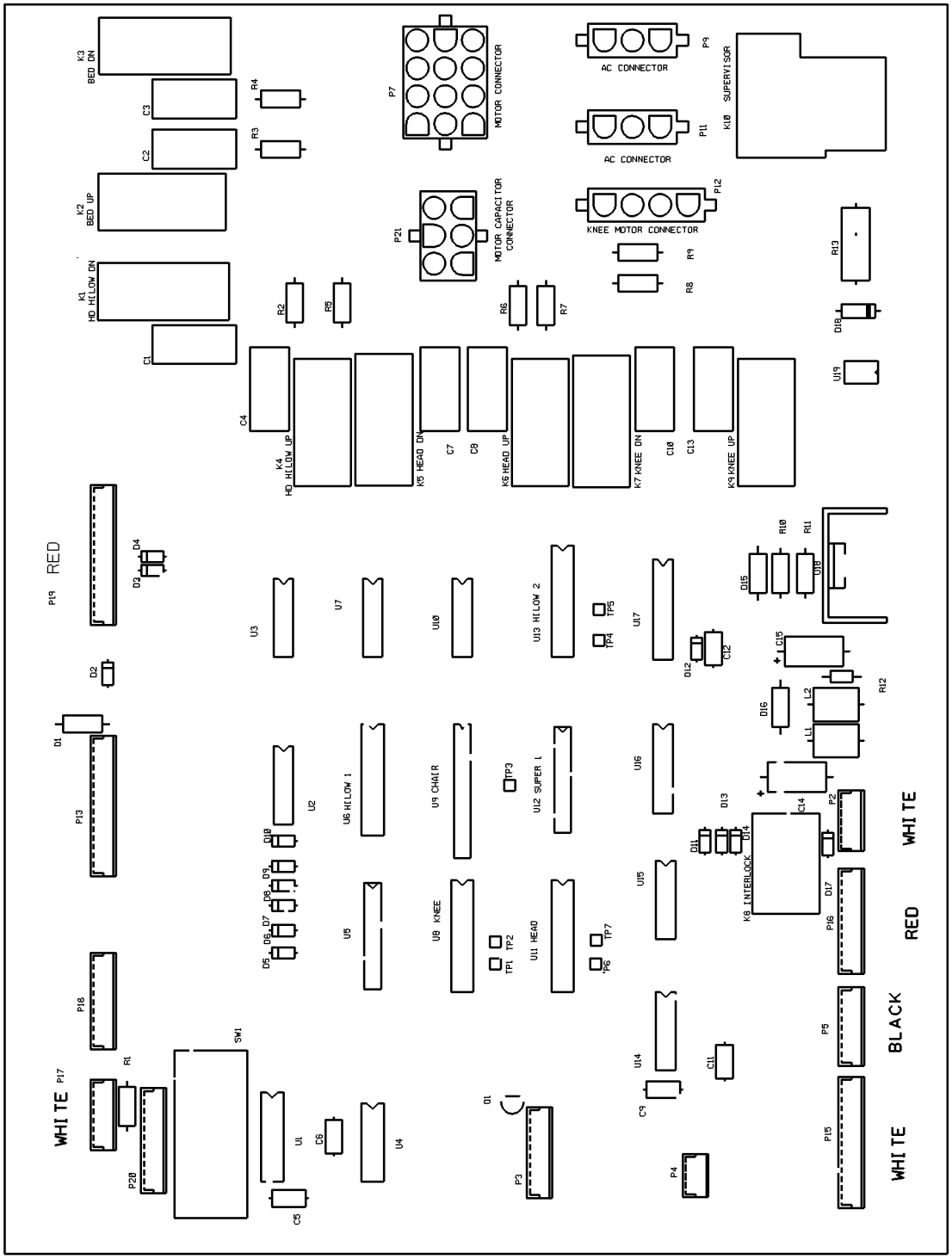

m168_114

Figure 3-24. Logic Control P.C. Board—Bottom P/N 63285

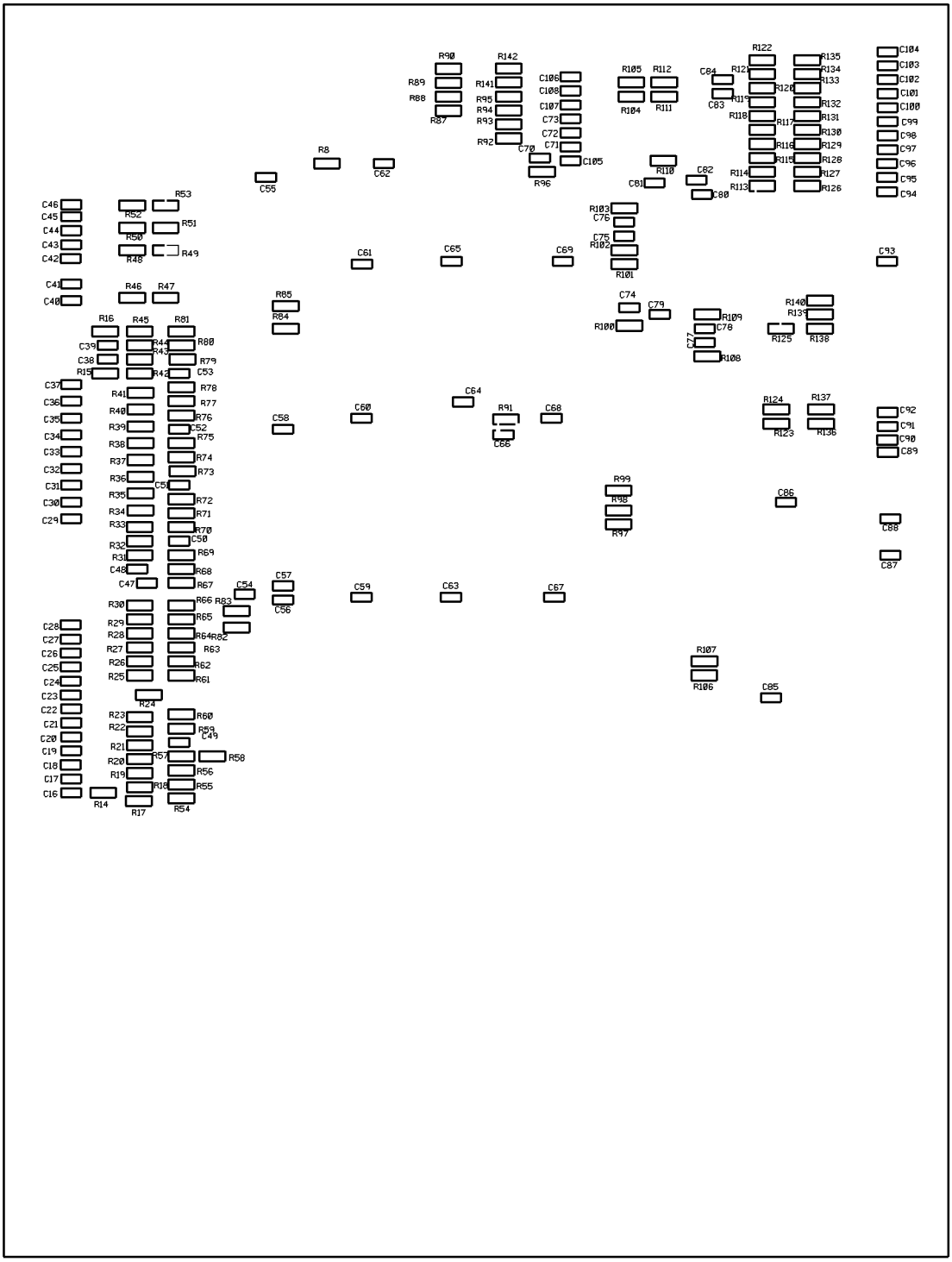

m168_116

Power Supply P.C. Board—P/N 63349

The overall power supply system of an Advanta™ Bed consists of four major subassemblies:

- The power supply P.C. board assembly, part number 63349, is the heart of the system, containing all the active components that regulate, rectify, and manage the power sources (see figure 3-25 on page 3-21).
- Cabling links all the major modules of the bed frame and conducts the signal from module to module.
- An oversized transformer, part number 64149, with 3X safety factors provide an isolated down conversion in voltage.
- Included with the power supply P.C. board assembly is the feature-based circuitry of the night light and the ground fault circuit.

A power supply P.C. board assembly consists of five distinct regulator circuits that power individual unique modules of the bed:

- Individual protection for each regulator is provided to prevent one or more modules from bringing down the whole bed system.
- The individual regulators have over-temperature protection.
- The individual regulators have protection from voltage and current overloads.
- All linear regulators are adjusted in voltage and current output to match the individual requirements of each module.
- The switcher used for the logic control module is sized to accommodate the needs of the logic components.

Each has different characteristics unique to that particular module.

The foremost concern of the power supply module is safety. All circuits involved in over-current, over-temperature, and dielectric strength is redundant or 100% tested and burned in. This is done to prevent any safety-related incident with the power supply module. All cabling is double insulated. The transformer has built-in safety factors and has two levels of fuse protection, both in the primary and in the secondary. All components used in the power supply module have a safety factor of at least 2X or have been tested to life without issue at the worst possible environmental condition.

AC line current from the transformer is rectified, filtered, and then presented unregulated to the linear and switching regulators. Each of the regulators acts as a pre-regulator for each functional module. There are two low current

accessory connectors available for future needs on the power supply P.C. board. The unregulated voltage is monitored by a circuit that disables the relay power supply and the PPM/Scale module. Line voltages, or loads that create unregulated voltages less than approximately 10-12 volts, disable the output of the relay/Scale/PPM power supply. Recovery occurs when the line voltage or load condition returns to normal.

The power supplies are independent and unique. Each has its own protection from overload, that prevents one output load issue from bringing down the entire system. The air system module has built-in current-limiting in the design; all others are protected by current/temperature protection PTC's. The PTC is sized within a module current requirement and duty cycle. All fuses are soldered in the board. Fuse failure is remote and usually indicates failure of a primary power supply component. Fuse rating and part number must be identical to maintain regulatory approval of the bed power supply.

The ground fault circuit measures the voltage differential on the neutral line coming in to the bed. This particular circuit is referenced to the bed chassis ground. Any differential greater than approximately 6 volts turns on the FET and, therefore, turns on the emitter follower that outputs to an optocoupler which isolates to the logic control P.C. board. This allows detection of a loss of ground or a phase-neutral reversal to be determined.

The night light circuit is a comparator circuit that determines a reference point via an adjustable potentiometer, and a CdS photocell that determines resistance based on ambient light. A regulated power supply is connected to the comparator circuit and the DC bulb used for a light source.

The power supply is linked to the logic control P.C. board via connector P7 using a cable, part number 6148904. A regulated voltage and current-limited supply is sent to the relays used on the logic control P.C. board. A regulated voltage and current-limited supply is also sent to the logic control regulator.

The scale and PPM module is supplied pre-regulated voltage that is current limited. The interconnect scheme is a connector P13 and a cable, part number 63727. There are two nurse Call signals brought to the power supply P.C. board to connect to the communications junction box assembly.

The Universal Television (UTV) and communications junction box assembly is supplied two pre-regulated voltages that have current-limiting protection. The interconnection is presented by connector P12 and a cable, part number 63726. The power supply has interconnections for Nurse Call signals that are generated by the scale and PPM module.

Surface control P.C. boards utilize the power supply pre-regulator for air systems. The regulated and current-limited supply is transported via connector P8 and a cable, part number 63729. This interface is earth-ground-referenced.

An AC line supply connector, P5, is provided for accessories or air system control P.C. boards that require AC line voltage. This supply is not fused. The cable for air systems is part number 63730.

The transformer, part number 64149, provides two independent, unregulated, step-down voltages to the input rectifiers on the power supply assembly. The transformer is connected via P6. The cable interconnect is part of the transformer assembly.

A night light bulb assembly is connected to the power supply P.C. board via connector P16. A cable interconnect assembly, part number 63728, connects the bulb assembly mounted on the lower motor dust cover on the intermediate frame.

Two accessory connectors are available for future products. They provide a pre-regulated voltage of 13 volts, which has current limiting. The amount of current available is dependent on installed bed features, and operation characteristics of the product.

Figure 3-25. Power Supply P.C Board P/N 63349

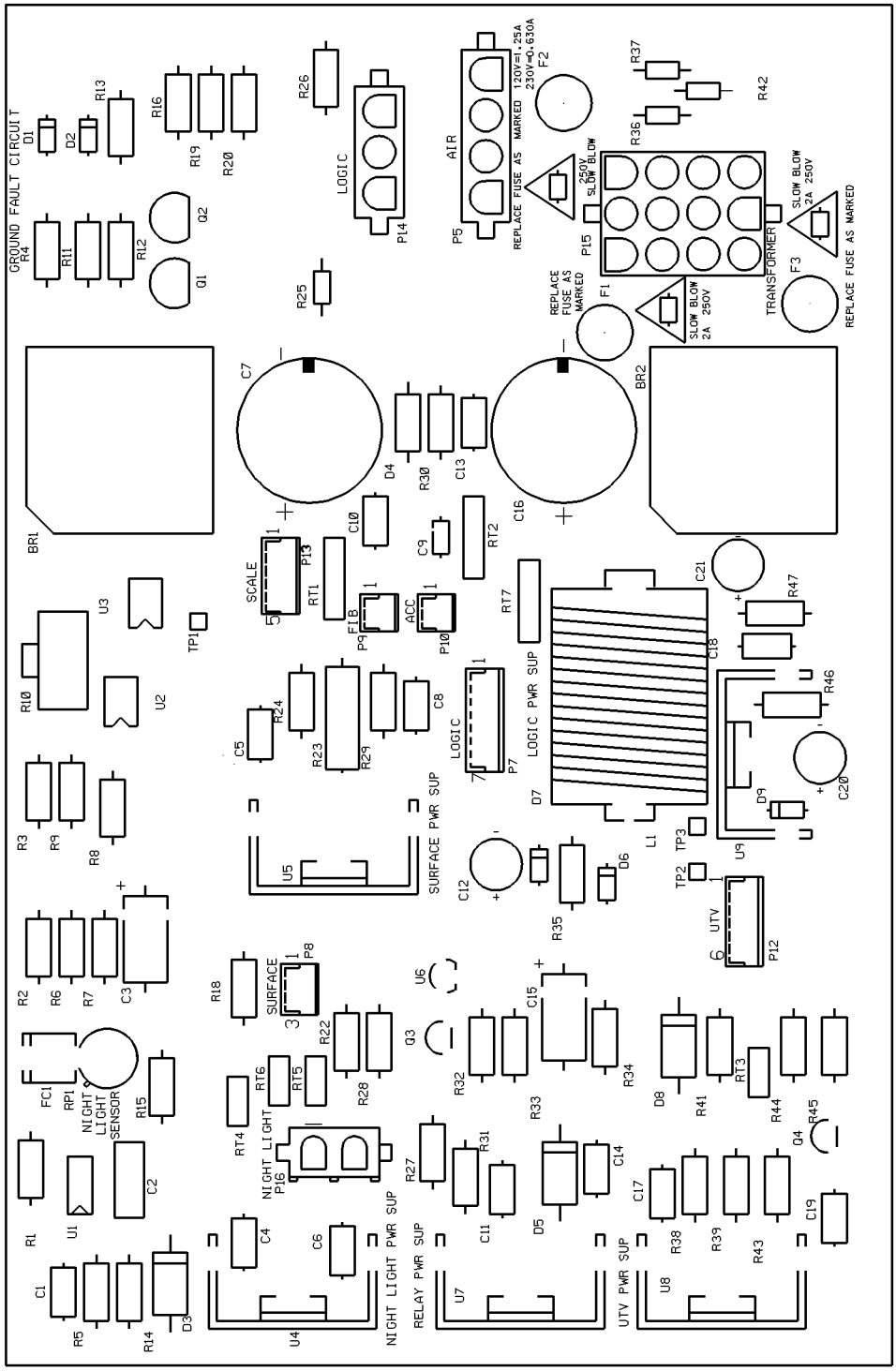

m168_176

Patient Position Monitor (PPM)

Power is supplied to the Scale/PPM module via connector P5, by the P1600 central power supply. The power supply provides a pre-regulated 12-14V DC referenced to signal VSS at 400mA maximum, 200mA typical, and another unregulated 9-18V DC referenced to signal chassis digital ground at 200mA. The voltage referenced to chassis digital ground is only used for the bed exit ARMED signal that goes to the CIB. This is for field compatibility. The supply with respect to signal VSS is distributed throughout the rest of the Scale system/PPM from this assembly.

There is an on-board piezo speaker. The microprocessor allows it to turn on with a logic level high to the base of a NPN transistor which sinks enough current to turn the buzzer on. There are three output lines from the microprocessor for three volume levels. This is achieved by placing multiple resistor values in series with the piezo. A capacitor is connected across the piezo to keep the voltage up when a resistor is used in series with the piezo. The piezo is connected to 12 volt DC to achieve maximum decibel (db) level. Steering diodes on the base of all three NPN keep the piezo attenuated when the microprocessor is in a reset condition.

The Watch Dog Timer and Reset Circuit monitors VCC and when it comes up to 4.75 volts, the reset line is released after a 250ms delay. The reset line goes high if the strobe line is not strobed within 1.2 seconds. The inverse reset pin is used to keep the piezo off when the controller is in reset.

Three Force Sensing Resistors (FSR) are located on the sleep surface. The head sensor is the only one used for the position mode. Two FSR are located in the thigh area and are used in the exiting mode as well as the head sensor. Load beams are used to detect that a patient has left the bed. The FSR output decreases in resistance with increased force. The PPM sensor (FSR) input signal enters the board through P6, P7, and P8. Each sensor goes into one of the four channels on the 8-bit A/D. The data is then read serially by the embedded controller.

The inside (left) siderail LED is on whenever the PPM/bed exit system is on. This lets the patient and caregiver know the system is on from the right side of the bed. It is controlled by the microprocessor and switched via an NPN transistor on P5.

The PPM caregiver interface, located on the outside of the left siderail is used to initiate functions, mode selection and alarm volume level. The LEDs' indicate status of the PPM/bed exit system.

The analog assembly is responsible for scale readings and memory retention. The analog circuitry is located in the weigh frame of the bed as close to the load beams as possible. The load beams are resistive bridge sensors excited by a regulated DC voltage. The inputs from the load cells are through connectors P1 through P4.

The scale display P.C. board (P/N 63344) is located in the footboard, is connected to the PPM microprocessor (P/N63217) assembly through P1, and uses an eleven position blue cable. The display is capable of showing weight ranges from –450 lb to +450 lb. There are six switches available for user inputs. These are connected in a 2-row-by-3 column matrix. They perform typical scale functions like zero, on/off, and change items.

Air Control P.C. Board—P/N 44760

Echelon Node

The Echelon node consists of an Echelon microprocessor (U1, MC143150FU, Neuron), 32Kbyte PROM (U2), power up reset circuit (U11), 10 MHz crystal, and an RS485 transceiver (U3). The nodes' I/O pins, I/O_0 through I/O_3 make up a 4 bit bi-directional data bus. I/O_4 through I/O_6 are used as address lines for the HC138 decoder. The decoder outputs are chip select lines for the HC244A and HC240A buffers (inputs) and for the four HC175 flip-flops (outputs). I/O_8 through I/O_10 make up the Neurowire bus. These three signals, along with other chip select lines, are used to transmit/receive data from the sensor/valve module in the mattress. Resistor R111 is used as a termination load for the RS485 bus. If the air control P.C. board is not the last node on this bus, this resistor should be removed.

Latches and Buffers

Chip select (enable) lines of the HC244A and HC240A buffers allow their outputs to access the data bus. The buffers are used to read most of this board's digital inputs. The chip select (clk) lines of the HC175 flip-flops are used to latch data already on the data bus into the flip-flops. Most of the outputs on this board are controlled from these flip-flops.

Valve/Sensor Module Digital Control Lines

CONN_CHK (P114-13) is an input signal that determines if the user-accessible connector (located under the foot section) is connected or not. If the signal is LO, the cable is either disconnected or there is no logic power available on the sensor/valve board. Relay K1 will be opened by the

microprocessor so that no significant power is available at the user-accessible connector.

The output signals SEN_SEL_A (P114-16), SEN_SEL_B (P114-17), and SEN_SEL_C (P114-18) are used to select one of the six air pressure sensors for which data is to be received.

The EEPROM_CS (P114-15) output enables the EEPROM to access the Neurowire bus.

The A/D_D/A_CS (P114-3) output enables the Analog-to-Digital (A/D) or the Digital-to-Analog (D/A) converter to access the Neurowire bus.

The DATAOUT (P114-5), DATAIN (P114-4), and CLK (P114-14) signals make up the Neurowire bus. The CLK signal strobes data to the valve/sensor board on the DATAIN line, and it strobes data from the valve/sensor board on the DATAOUT line.

Again the A/D_D/A_CS and EEPROM_CS chip select lines determine which integrated circuit on the valve/sensor board will access the Neurowire bus.

External Watchdog

The circuitry surrounding U10 is an external watchdog timer circuit. In the event that the microprocessor locks up or gets lost, this circuit will clear all the flip-flop outputs, and reset the Neuron. The Neuron’s software must pulse U10-6 at least once every 30 s to keep U10-8 from going LO. A falling edge of I/O_7 generates a 480us positive pulse at U10-6 due to C39 and R15. If I/O_7 is stuck HI or LO, the DC blocking capacitor C39 allows R15 to pull the input of the Schmitt-Trigger Inverter LO, which keeps U10-6 LO. U10 is a programmable timer with a 16-stage counter and internal oscillator. Upon power up, the Q output goes HI. If MR, master reset, is constantly LO, the Q output will oscillate at 30 s HI, and then 30 s LO. A HI on MR resets the counter and keeps the Q output HI.

24V AC Solenoid Drivers

The circuitry surrounding U20 - U25 and Q3 - Q8 comprises the solenoid drivers used to open and close the air valves located in the mattress valve/sensor module.

Power for the solenoids comes from the off board 80VA, 24V AC secondary, transformer. Fuse F2 provides primary coil protection and is sized to pass UL544 short and overload tests. Fuse F1 provides secondary protection and is necessary for IEC601-1 short and overload tests. Zero ohm resistors, R80

through R82, are used to configure the transformer's primary coil for either 115V AC or 230V AC operation. Relay K1 acts as a supervisory switch for solenoid power and logic power to the valve/sensor module. The relay is on continuously during normal operation. It is turned off onlyif the cable is disconnected, if a system failure is detected, or if the air system switch is turned off.

The 4 amp triacs, Q3 - Q8 are driven by the opto-triac drivers U20 through U25. Fuses F3 through F8 provide overcurrent protection for the cable and valve/sensor module.

The circuitry surrounding U18 provides an O-ring feedback function to the microprocessor. This circuit detects whether a triac is conducting. Resistors, R50 through R55 are sized so that only when a triac is conducting will the U18 opto's detector output switch. When a triac is conducting, the output of the opto is a 50 or 60 Hz square wave. This square wave keeps capacitor C27 discharged so that the output of the Schmitt-Trigger Inverter is HI. When all triacs are in the blocking state, C27 charges up via R66 and R69 which allows the inverter output to go LO.

Compressor and Crossover Valve Drivers

The circuitry surrounding Q9, Q10, U26, and U27 makes up the compressor and cross-over valve drivers. Q9 and Q10 are 800V, 8A, high noise immunity triacs. The circuitry around U19 is another O-ring function similar to the one previously mentioned.

Electrostatic Discharge (ESD) Protection

Some integrated circuits have a 100 ohm resistor in series with its Vcc pin to limit Icc to 50 mA. This helps prevent latch-up. Switched inputs have RC protection for debounce and static. Digital outputs have a 5.0v TVS zener, 1K ohm resistor, and (Harris SP720) diode clamps.

LON Connector (P112, P113)

Pins 2 and 7 provide unregulated logic power to the board from the central power supply.

Pins 3 and 8 are for unregulated logic power return.

Pins 4 and 5 are the Echelon net signal lines.

Pin 9 is the net shield connection.

Regulator

RT1 provides overcurrent protection at currents over 0.5A. U15 regulates to + 5V DC ± 0.25V. Maximum output current for this application is approximately 385mA. U15 can maintain regulation with an input voltage down to 5.75V DC.

Line Input Power (P110)

P110-1 is line, P110-2 is neutral, and P110-4 is chassis ground.

Figure 3-26. Air Control P.C. Board—Top P/N 44760

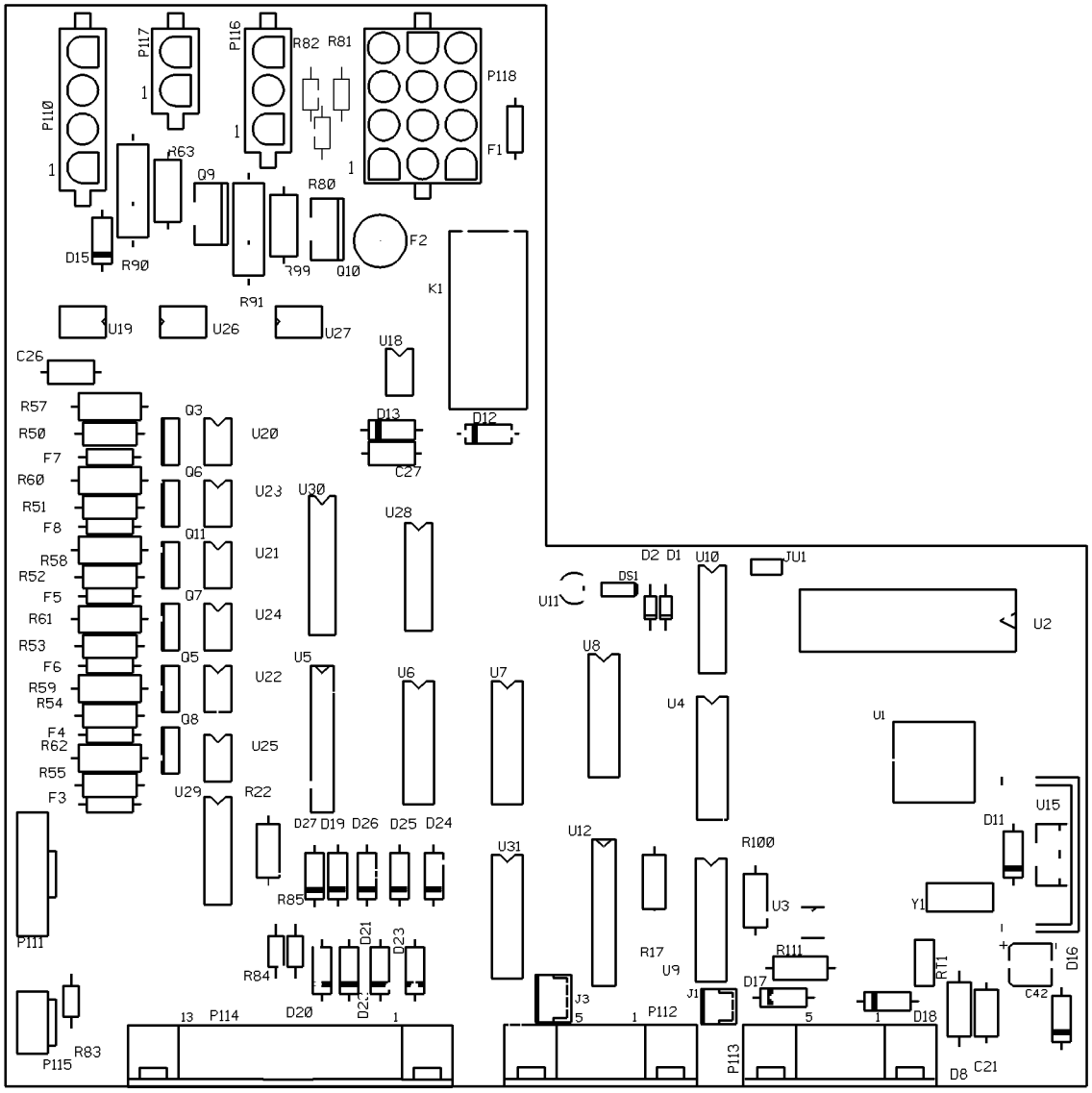

m168_145

Figure 3-27. Air Control P.C. Board—Bottom P/N 44760

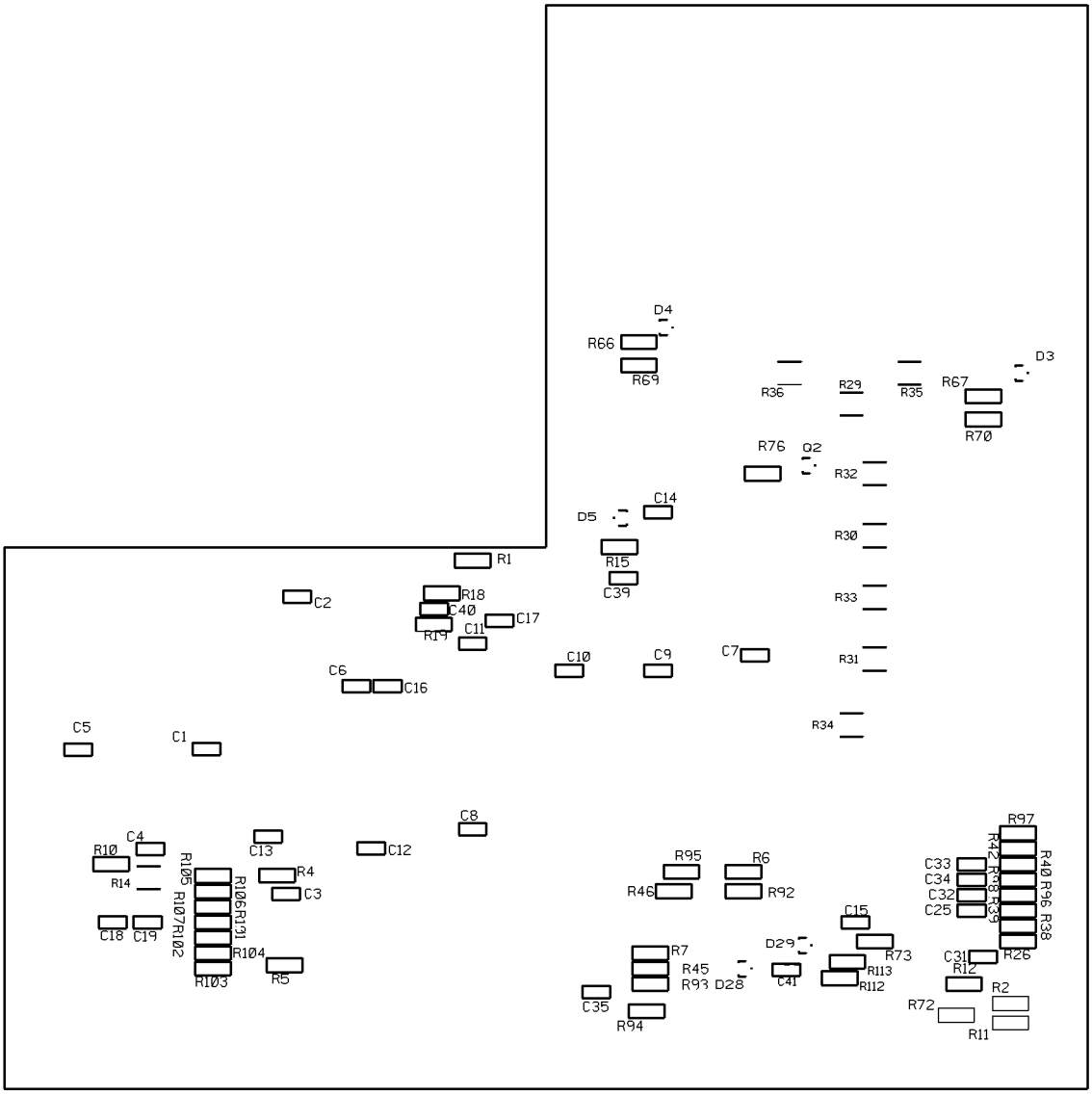

m168_146

Sensor Control Board—P/N 44740

General Description

The pressure sensing circuit provides the interface between the Advanta™ Bed ZoneAire® Sleep Surface multiple air volume and the control circuit.

The pressure sensing circuit consists of six air pressure transducers and a common mode reference voltage input, which are multiplexed and amplified sequentially. The DC offsets are corrected by a digital-to-analog (D/A) converter whose output negates the offsets of each transducer and reference amplified signal. An eight-bit, analog-to-digital (A/D) converter configured for nine bit accuracy converts the amplified signal to a digital form compatible with the serial interface requirements. Included in the circuit are the following:

- 64-word EEPROM, which stores the required D/A DC offset compensation byte for the reference and each transducer
- the A/D converter output corresponding to the reference input
- the A/D converter output at zero psi for each transducer
- the A/D converter output at one psi for each transducer.

This design allows all circuit gain, offset, and calibration parameters to remain on board, thereby enabling characteristic independence from the mating control processor circuit.

Input Protection

Diodes D21-D26 and D30 are transient voltage suppressors used to divert input electrostatic discharge (ESD) currents to ground. They have a breakdown voltage between 6.4 and 7 volts. The voltage at the input pins of the Schmitt-Trigger U9 and NAND gate U7 cannot exceed the supply voltage by more than 1.5 volts nor can it drop below the ground potential by 1.5 volts. Therefore, any voltage build-up across the voltage suppressors is clamped by diodes D3-D14, D28, and D29 through current-limiting resistors R52, R54, R56, R58, R60, R62, and R64. The inherent hysteresis of U9 provides clean logic levels and sharp transitions to the circuit's logic devices. U7 provides a clean logic level to the select line of multiplexers U1 and U10. Diode D27 is also a transient suppressor with a breakdown voltage between 20 and 24.4 volts.

Output Protection

The output pin 6 of U7 cannot exceed the supply voltage by more than 0.5 volts, nor can it drop below the ground potential by 0.5 volts. Therefore, any voltage build-up across voltage suppressor D15 must be clamped within 0.5 volts of the rails. To compensate for the approximately 0.7 volt turn-on voltage of D17, zener diode D16 and resistor R50 create a lower rail voltage of approximately 4.7 volts as a reference for clamping diode D17. Likewise, D19 and R49 create a (Vcc - 4.7) volt reference for clamping diode D18. R51 limits current during transient events, yet provides low line impedance during normal operation.

Capacitor C21 absorbs transient currents while R47 limits any current caused by ESD.

EEPROM

Upon reset, the control processor reads the offset compensation constants from EEPROM. To do so, a logic level 0 (low) is applied to P131 pin 15 (EEPROM_CS). This results in a logic level 1 (high) at the chip select U3 pin 1 enabling the EEPROM. A 0 is then applied to P131 pin 4 (DATA_IN) as a start bit of 1 at U3 pin 3. A 0-1-0 clock pulse is then applied to P131 pin 14 (CLK). The low-to-high transition of the inverted pulse at U3 pin 2 causes the start bit to be clocked into the EEPROM as the first bit of the read instruction. The remainder of the read instruction is sent by clocking in seven more bits, 10XXX, where 10 is the opcode for READ, and XXXXX is the complement of the address of the word being read. The next 16 clocks at P131 pin 14 clock the 16 bit word out of U3 pin 4 on the U3 pin 2 rising edge. The most significant bit (MSB) is clocked out first, the least significant bit (LSB) last.

Resistor R24 acts as a current limiter which protects U3 should a latch-up condition occur. C11 provides decoupling.

Digital-to-Analog Converter

NAND gate U7 pin 1 acts as a D/A chip select pin. A logic level 0 at P131 pin 3 (A/D_D/A_CS) enables the CLK signal to the shift register U8. The complement of the MSB of the incoming byte is applied to P131 pin 4 (DATA_IN). A 1-0-1 clock pulse is then applied to P131 pin 14 (CLK). The low-to-high transition of the pulse at U2 pin 8 causes the MSB to be clocked into the shift register. The remainder of the byte is sent by clocking in the complement of the seven remaining bits. After the eight clocks, the MSB is seen at U2 pin 13, and the LSB is seen at pin 3.

R63 is an R/2R resistor network whose output is 256 discrete voltage levels linearly spaced from Vss to approximately 2.90 volts. The voltage at R63 pin 16 is determined by the D/A byte shifted into U2. R46 scales the range of R63 pin 16 to the 2.90 volts described above.

Resistor R20 acts as a current limiter, which protects U2 should a latch-up condition occur. C12 provides decoupling.

Analog Multiplexer

Analog multiplexer U1 routes the selected reference or pressure transducer output voltage to the amplifier. Resistor R19 acts as a current limiter which protects U1 should a latch-up condition occur. C13 provides decoupling.

Amplifier

The amplifier is a two-stage, differential, amplifier circuit with a sum input at the first stage and a difference input at the second stage. U6 has low input offset voltage advantages while U5 has large output voltage swing advantages. R1 and R2 act as voltage dividers that apply approximately 1.93 volts at U6 pin 10. This voltage is passed through the unity gain amplifier to U6 pin 8. The differential voltages from the selected transducer are applied to U6 pin 3 and pin 5. The difference between these two voltages is amplified by a gain of approximately G = 256 and added to the 1.93 volts at U6 pin 8. This guarantees a voltage within the operating range of the amplifier, including worst-case component voltage tolerances and over-the-worst-case pressure range. The voltage at U6 pin 7 is applied to a difference amplifier with gain of G = 2. The voltage at U5 pin 3 is the output of the D/A converter whose value is that needed to compensate for the DC offsets of the selected sensor and amplifier. This voltage is subtracted from that at U6 pin 7, and the result is amplified by G = 2. The voltage at U5 pin 7 is then applied to the A/D converter U4 pin 3.

Resistor R3 acts as a current limiter which protects U6 should a latch-up condition occur. C1 and C3 provide decoupling.

Analog-to-Digital Converter

Analog-to-digital converter U4 can be addressed to operate in a differential mode. This enables it to be configured to operate with higher accuracy. Resistors R17 and R18 divide Vcc in half. This voltage is applied to the unity gain amplifier U6 whose output is applied to U4 pin 4 (CH 1). To select U4, a 1 is applied to P131 pin 3 (A/D_D/A_CS). This 1 is inverted by U9 and applied to U4 pin 2. A zero is applied to P131 pin 4 (DATA_IN) as a start bit resulting in a 1 at U4 pin 13. A 0-1-0 clock pulse is then applied to P131 pin 14 (CLK).

The low-to-high transition of the inverted pulse at U4 pin 12 causes the start bit to be clocked into the A/D as the first bit of the conversion instruction. The remainder of the conversion instruction is sent by clocking in three more bits, 101, where 101 is the opcode for converting U4 CH 1 with respect to CH 0. The next eight clocks at P131 pin 14 clock the eight bit A/D byte out of U4 pin 10 on the U4 pin 12 falling edge. The most significant bit (MSB) is clocked out first, the least significant bit (LSB) last. If the voltage at CH 0 is greater than Vcc/2, a second conversion is required. After clocking in the start bit as described above, three more bits, 111, are clocked in, where 111 is the opcode for converting U4 CH 0 with respect to CH 1. The next eight clocks at P131 pin 14 clock out the eight bit A/D byte as described above. C5 provides decoupling.

Solenoid Drive

Connector P131, pins 7 - 12, routes the 24V, 50/60 Hz solenoid drive voltage directly to the solenoid valves through P132 pins 13, 11, 8, 6, 4, and 2, respectively. P132 pins 1, 3, 5, 7, 10, and 12 route the solenoid drive return to P131 pins 21 - 24 through zero ohm resistor R99.

Grounds

Analog ground (Vss) and digital ground (GND) are tied together through zero ohm resistor R29 to create a star ground configuration. This helps isolate noisy digital return currents from the analog returns.

Capacitor C22 provides a path to chassis ground for chassis-referenced transients on the circuit grounds.

Power Supply

Voltage regulator U8 maintains Vcc at 5 $\pm$ 0.25 volts. C6 and C7 maintain regulation stability. D2 provides a bleed off path for C6 during loss of power at P131 pin 1 (VBB2SW). P131 pin 13 (CONN_CHK) returns Vcc to the control processor board as an indication that the electrical connections between the two circuits are made.

Resistors R14 and R16 voltage divides the unregulated supply VBB2SW by 0.263 to enable sampling by the A/D. Resistor R66 protects the A/D by current limiting any transients on VBB2SW.

Figure 3-28. Sensor P.C. Board P/N 44740

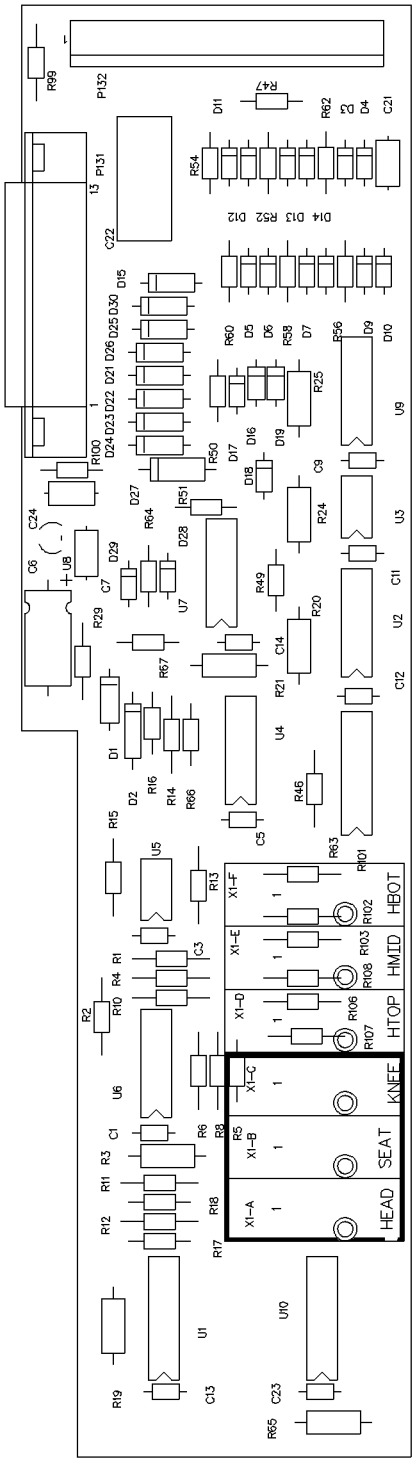

m168_127

ZoneAire® Sleep Surface Air Interface System

Switch Matrix

The ZoneAire® Sleep Surface user interface requires 10 switches and 12 indicators. When a switch is pressed or released, there is a minimum 50 - millisecond debounce. A network output message is sent via the LON network to the ZoneAire® Sleep Surface providing the state of all 10 of the system switches. When a network input message is received from the system, the state of the 12 ZoneAire® Sleep Surface indicators is updated to one of four states: off, blink slow, blink fast, on.

Membrane Key Panel Switch Multiplex Circuit

The switches in the membrane key panel are arranged in 4 rows of 8 columns. Address 0 through 7 of the decoder/selector circuit select columns 0 through 7 individually. Switch states are read on the switch input nibble from the A outputs of the 74HC244 tri-state buffer, U5. The A output is selected when any of the addresses 0 through 7 are selected on the decoder/selector circuit. The 1N4148 diodes provide protection of the selected column when multiple switches in the same row are activated. Half of the 10K resistor RN2 are used as pull-up resistors for the switch input nibble. The 74HC14 Schmitt Triggered Inverter, U6, buffers the input lines to U5.

LEDs

The switch LEDs and the service required LED are strobed by the LED driver chip (U3). The neuron instructs the driver to turn the LEDs on or off via I/O_8 and I/O_9 (Neurowire).

Membrane Key Panel LED Driver

The Motorola MC14489 LED display driver, U11, provides drive for 22 of the 26 LED’s located on the membrane key panel. LEDs D1 through D11 and LEDs D17 through D2 are driven by the MC14489 in a multiplexed mode. The refresh rate on bank 1 through bank 5 is between 700 and 1900 Hz. The Neuron controls this display driver through the Neurowire Object. Configuration of the MC14489 is set as an eight bit configuration register. The LEDs are arranged into 5 banks in a common cathode configuration. LED states are controlled by a 24-bit display register. The 3.3K brightness resistor R3 sets the LED current to each LED to approximately 10 mA peak.

ZoneAire® Sleep Surface—Mattress Plumbing

The mattress contains three individual bladders segmented into nine separate sections. There is a port on the left side of each bladder that connects the bladders to their corresponding valve located in the foot end of the mattress and possibly to another bladder. This port is used only for inflating and deflating the bladder.

There is also a port on the right side of each bladder that connects the bladders to their pressure sensor located at the foot end of the mattress and possibly to another bladder. This port is used only to sense the air pressure in the bladder.

The pneumatic-related components in the system include the compressor (air pump), the flow direction switching valve, and the muffler.

The muffler minimizes noise as air is pumped into and out of the ZoneAire® Sleep Surface system. A hose connects the muffler to the flow direction switching valve.

The flow direction switching valve controls the bi-directional airflow in the system. The hoses on the switching valve lead to the mattress, the muffler, and the input and output of the compressor. A 120V AC solenoid changes the valve position. When the flow direction switching valve is deenergized (its normal state), air is pulled in by the compressor directly from the muffler. The air from the compressor then passes back through the valve and out to the mattress. This sequence is repeated whenever air is needed to inflate the mattress.

For system functions that require airflow out of the bladders, the air control board supplies 120V AC to energize the flow direction switching valve. With the compressor on, air is pulled from the mattress, through the compressor, then back through the switching valve and out the muffler.

Airflow through the pump is always in the same direction.

ZoneAire® Sleep Surface Software Theory of Operation

Essentially all intelligent communications and control are performed by the controller circuit. This document is intended to describe the operation of the software, internal to the controller circuit, that provides this intelligence. While the concentration is on software, this description should provide a better understanding of operation of the entire system.

Communication between the controller circuit and the footboard control panel is via LON communications protocol through a single pair of wires utilizing RS485 medium standard. Communications between the controller circuit and the pressure sensing circuit is via a 25 pin D-sub cable, utilizing 3-wire, synchronous, serial, bi-directional communications (along with other discrete lines, and AC and DC power).

General Description

The ZoneAire® Sleep Surface is an air-inflated, multi-functional, automatic sleep surface used in conjunction with hospital patient beds. The system functions are separated into several modes of operation.

The pressure relief mode is designed to minimize and uniformly distribute interface pressures between a patient and the sleep surface.

Three heel relief modes further reduce heel-to-sleep surface interface pressure and can accommodate a wide range of patient heights.

The auto firm mode inflates the mattress to a high pressure to aid in transfer of patients to and from the bed.

The CPR mode inflates the sleep surface to a high pressure to provide a firm surface should CPR need to be performed on a patient.

Software algorithms are included to provide limited self-diagnostics to reduce the probability of unknowingly operating in a degraded state and/or reduce durability of components. Software algorithms, which can be activated through the footboard control panel, are also included to aid in troubleshooting.

Reset

A reset can happen two ways. A reset is initiated when power is applied to the Neuron micro controller, and when a Neuron watchdog timer expires.

Upon reset, the following sequence occurs:

- The operating mode is read from the Neuron's internal EEPROM. This is the state the air system was in before the reset occurred.
- Relay is turned on. This supplies power to the pressure sensing circuit located in the mattress. It also supplies 24V AC power to the manifold valve assembly drive circuitry.
- Messages are sent to the footboard control panel to light the appropriate LEDs.
- Any errors present are cleared.
- The sensor calibration constants are read from the EEPROM located on the pressure sensor circuit. These constants are stored in multiple locations. If the constants in these multiple locations are not consistent, an error is set.
- The present pressure is read and stored for reference for use in the comfort mode.
- Normal operating sequence is initiated in the appropriate mode.

ZoneAire® Sleep Surface Operating Modes

The air system operates in one of the following possible modes:

- Off
- Pressure management (pressure relief)
- Heel management 1 (heel relief 1)
- Heel management 2 (heel relief 2)
- Heel management 3 (heel relief 3)
- Auto firm
- CPR

In all modes, the footboard control panel is monitored for activity pertaining to the air system. In all modes, except the off mode, a main loop is executed at an approximate 25 Hz rate that performs the following functions:

- Regulates/controls pressure in the appropriate air system mode
- Converts from a digital to an analog signal to calibrate each sensor prior to an anaolg-to-digital conversion
- Converts from an analog to a digital signal on each pressure sensor
- Monitors electrical connection between the control circuit board and the pressure sensing circuit board
- Monitors CPR switch input
- Monitors the driver circuits for the air pump and each valve for proper output

Some operating modes have a mode memory feature. With this feature, the system can return to the previous operating mode when the present mode's switch is pressed (i.e., toggle from the present mode back to the previous mode). For example, suppose a transition is made to the auto firm mode from the comfort mode. If the *auto firm* switch is pressed, a transition is made back to the comfort mode and user-defined pressure trim points (defined below) are restored. The following modes have this mode memory feature:

- Heel relief_1 mode
- Heel relief_2 mode
- Heel relief_3 mode
- Auto firm mode
- CPR mode

Off Mode

While in the off mode:

- The relay is opened.
- Other outputs are cleared.
- Hardware watchdog is refreshed (unless disabled by LON explicit message code 0x01 for testing during manufacture).
- All air system footboard control panel activity is monitored.
- All air system LEDs, except mains power, are off.
- No pressure is regulated.

While in any of the other modes, the air system transitions to the off mode in two ways:

- The *surface power* switch is pressed.
- An air system error occurs (not a communication error).

Pressure Relief Mode

While in the pressure relief mode, the air pressures in each of the six bladder zones are regulated at predefined levels, called trim points. Around each of the trim points is a “band” which provides a pressure tolerance and creates a pressure lag. If no correction in pressure is taking place, the band is used as the reference.

Transition to the pressure relief mode can be made by:

- Pressing the *surface power* switch while in the off mode.
- Pressing the *heel relief* 1 switch while in the heel relief 1 mode.
- Pressing the *heel relief* 2 switch while in the heel relief 2 mode.
- Pressing the *heel relief* 3 switch while in the heel relief 3 mode.
- Pressing the *auto firm* switch while in the auto firm mode, only if the auto firm mode was initiated from the pressure relief mode (mode memory feature).
- Pressing the *auto firm* switch while in the CPR mode, only if the CPR mode was initiated from the pressure relief mode (mode memory feature).

The surface power off LED is lit when the systems are off.

Heel Relief Modes

While in a heel relief mode, certain zones are deflated to near zero pressure depending on which heel relief mode is selected. Pressures are then regulated, as described in the pressure relief mode above, at predefined trim points.

When a heel relief mode is entered, a 10-min timer is started. When this timer expires, the deflated heel zones are inflated to a higher, reliably readable, pressure, and then immediately deflated back to the trim points defined above.

Transition to a heel relief mode can be made by:

- Pressing any *heel relief* switch while in the pressure relief mode.
- Pressing any *heel relief* switch while in either of the other two heel relief modes.

The footboard control panel heel relief off LED is lit when the systems are off.

Auto Firm Mode

While in the auto firm mode, all trim points are changed to new values. Pressures are then regulated, as described in the pressure relief mode, at the new trim points. When this mode is entered, a 60-min timer is started. If this timer expires before the system is placed in a different mode, the system automatically returns to the previous mode.

Transition to the auto firm mode can be made by pressing the *auto firm* switch while in any other mode except the off mode.

CPR Mode

While in the CPR mode, all trim points are increased to new values as in the auto firm mode. However, the head and seat zones are inflated to these new values first. When these zone pressures reach their trim points, the knee and all three heel zones are inflated to their trim points. Pressures are then regulated, as described in the pressure relief mode, at the new trim points. When this mode is entered, a 60-min timer is started. If this timer expires before the system is placed in a different mode, the system automatically returns to the previous mode.

Initiate the transition to the CPR mode by pulling a CPR lever while in any mode except the off mode.

Mode Transition

Power Up

By design, the system always powers up in the pressure relief mode. If the bed is plugged in and the air system is off, turn on the system by pressing the *surface power* switch.

During transition from the off mode to the pressure relief mode, the following occurs:

- The low voltage AC/mattress power relay is activated, and all I/O is initialized.
- All errors are cleared.
- All timers and counters are initialized.
- Proper footboard control panel LEDs are lit.
- New mode (pressure relief mode) is stored in the on-chip EEPROM.
- Calibrations are read from the pressure sensing circuit EEPROM, and pressure trim points are calculated.
- Pressure out-of-range delay timers are defeated to allow immediate correction.
- Pressure tolerance bands around the trim points are calculated.

Intermode Transitions

Intermode transitions are transitions among all modes except the off mode. Upon transition into one of these new modes, the following occurs:

- Pressure bands around the new mode's trim points are calculated.
- Pressure out-of-range delay timers are defeated to allow immediate correction to the new trim points.
- Appropriate timers and counters are initialized.
- Proper footboard control panel LEDs are lit.
- New mode is stored in the on-chip EEPROM.

Power Down

A transition to the off mode, either manually or because of a system error, initiates a power down. Upon power down, the following occurs:

- All outputs, including the relay, are disabled.
- The new mode (off mode) is stored in on-chip EEPROM.
- All air-system-related footboard control panel LEDs are turned off. If the transition to the off mode is due to a system error, the service required LED flashes a code.

System Errors

The controller has built in self-diagnostics that are designed to detect system failures that may not be easily identifiable otherwise. These failures cause the system to transfer to the off mode and repeatedly flash a code on the footboard control panel service required LED.

For the ZoneAire® Sleep Surface, the code consists of a certain number of short flashes that indicate which error has occurred. The code is continually repeated with a long pause separating the short flashes.

Slow Leak Error

In all modes, except the off mode, the system is checked for slow air leaks every 5 min. A slow leak is small enough that the pump inflates to the proper pressure, but large enough to cause the system to correct too often.

To detect small leaks, a counter is incremented whenever an inflate sequence occurs and is cleared whenever a deflate sequence occurs. This counter represents the number of inflates without a deflate.

When the 5-min timer expires, the number of inflates without a deflate is checked for being greater than 20. If this number is greater than 20, a slow leak error is flagged, the operating mode transitions to off, and the footboard control panel service required LED repeatedly flashes code 1. If it is less than or equal to 20, the counter is cleared, and the 5-min timer is restarted.

The ability to detect a slow leak is much greater in the auto firm mode where the pressures are much higher and, therefore, leak more. If you need to troubleshoot a system with this error, do so while in the auto firm mode.

Continuous Run Error

In all modes, except the off mode, the system is monitored for the following failure conditions that would cause the pump to run continuously:

- Excessive air leaks
- Faulty pump
- Faulty air manifold or flow direction valve
- Faulty pressure sensor or sensor circuit
- Faulty control circuit
- Loss of AC power or blown fuse
- Open or pinched hose
- Mattress connector not seated properly

If the pump runs continuously for approximately 10 min, in either an inflate or deflate sequence, a continuous run error is flagged, the operating mode transitions to off, and the footboard control panel service required LED repeatedly flashes code 2, 2.

Triac Short Error

In all modes, except the off mode, the system is repeatedly checked for a control circuit failure that would cause an air manifold valve, the flow direction valve, or the pump to be wrongly activated.

Whenever the system is not correcting pressures, the feedbacks from the triac drive circuits are monitored. If any feedback indicates an activated drive circuit continuously for 5 seconds, a triac short error is flagged, the operating mode transitions to off, and the footboard control panel service required LED repeatedly flashes code 2, 3.

EEPROM Error

Upon reset and during power up (transition from the off mode to pressure relief mode), the calibrations read from the pressure sensing circuit EEPROM are checked for validity. Each calibration constant is stored in four locations to aid in determining whether there is an error. The circuit also detects faulty readings due to shorted or open communication lines between the control circuit and the pressure sensing circuit.

Whenever an EEPROM error is detected, the operating mode transitions to off, and the footboard control panel service required LED repeatedly flashes code 2, 4.

Mattress Connection Error

In all modes, except the off mode, the electrical connection between the control circuit and the pressure sensing circuit is monitored. Also, prior to reading the calibrations from EEPROM (at reset and power up), the control circuit checks the connection. It checks by sampling the pressure sensing circuit voltage feedback routed through the mattress cable.

The mattress connection error is set when feedback indicates disconnection at two different times:

- After 100 continuous samples (approximately 5 s).
- Prior to reading EEPROM.

Whenever a mattress connection error is detected, the operating mode transitions to off, and the footboard control panel service required LED repeatedly flashes code 2, 5.

Triac Open Error

In all modes, except the off mode, the system is repeatedly checked for control circuit failure that would prevent activation of an air manifold valve, the flow direction valve, or the pump when commanded to activate.

Whenever the system is correcting pressures, the feedbacks from the triac drive circuits are monitored. If any feedback indicates that a drive circuit is not activated continuously for 5 s, a triac open error is flagged, the operating mode transitions to off, and the footboard control panel service required LED repeatedly flashes code 2, 6.

LON Communication Error

In all modes, except the off mode, communications with the footboard control panel is checked. The Advanta™ Bed ZoneAire® Sleep Surface system gets updates, via LON communications, from the footboard control panel, at most, every 30 s. The system refreshes a 5-min timer whenever it gets this update. Should this timer ever expire, a LON communication error is flagged and the operating mode transitions to off. A message is sent to the footboard control panel to flash the service required LED for code 2, 7. Of course, chances are that the footboard control panel will **not** get this message. However, the

footboard control panel is also checking communications and should discover that communication was lost. It will then flash code 2, 7.

Chapter 4
Removal, Replacement, and Adjustment Procedures

Chapter Contents

4

NOTES:

4.1 Footboard

Tools required: None

Removal

SHOCK HAZARD:
If fluid is spilled in the footboard area, unplug the bed from its power source. Thoroughly dry the electrical connections for the footboard before plugging the bed into its power source. Personal injury or equipment damage could occur.

SHOCK HAZARD:
Unplug the bed from its power source. Failure to do so could result in personal injury or equipment damage.

1. Unplug the bed from its power source.

2. Remove the safety pins (D), if installed (see figure 4-1 on page 4-7).

Figure 4-1. Footboard

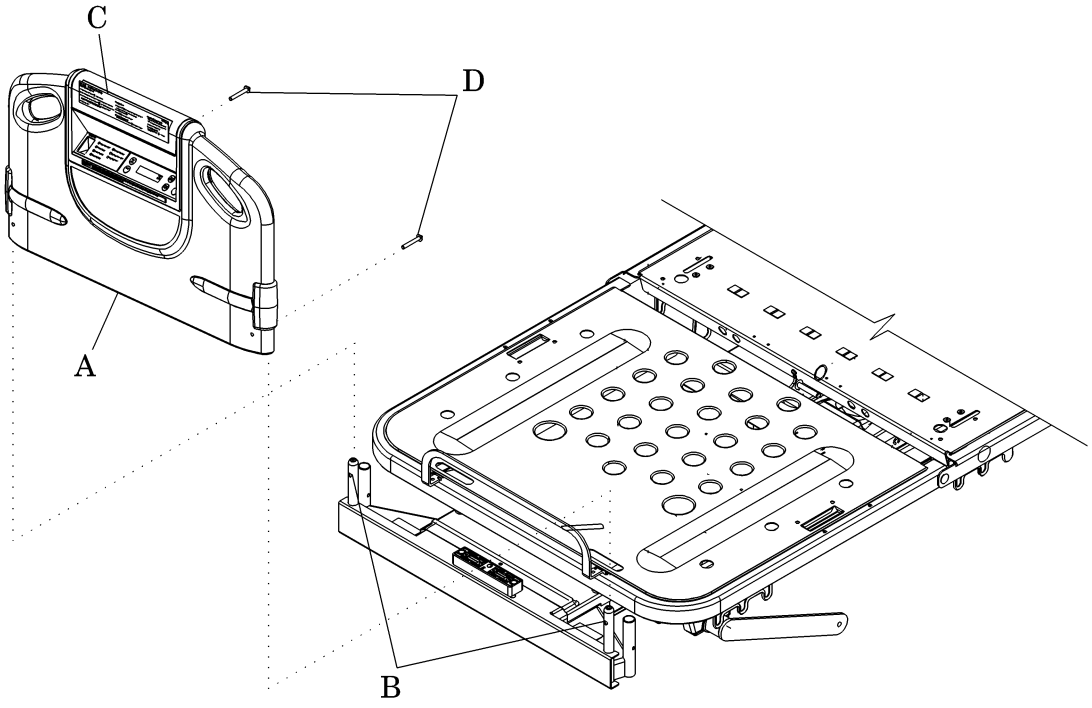

m168a046

3. Lift the footboard (A) off the mounting posts (B).

Replacement

1. Install the footboard (A) on the mounting posts (B).

NOTE:
The footboard connectors are keyed so that footboards will fit easily on the correct beds. Force is not necessary.

2. Install the safety pins (D), if present.

3. Plug the bed into an appropriate power source.

4. Check the functions on the footboard control panel (C) to ensure proper operation of the footboard (A).

5. To ensure proper operation of the Advanta™ Bed, perform the “Function Checks” on page 2-6.

4.2 Foot End Cover

Tools required: T25 Torx®[1] head screwdriver

Removal

1. Raise the knee section to its highest point.

SHOCK HAZARD:
Unplug the bed from its power source. Failure to do so could result in personal injury or equipment damage.

2. Unplug the bed from its power source.

3. Remove the footboard (see “Footboard” on page 4-7).

4. Fold the foot section up and back toward the head end of the bed.

WARNING:
Tie the foot section back toward the head section when preparing to remove the foot end cover. Failure to do so can cause the foot section to fall, resulting in personal injury or equipment damage.

5. Tie the foot section securely to the head end of the bed frame.

6. Using the T25 Torx® head screwdriver, remove the screws (A) that secure the foot end cover (B) (see figure 4-2 on page 4-10).

4

1. Torx® is a registered trademark of Textron, Inc.

Figure 4-2. Foot End Cover

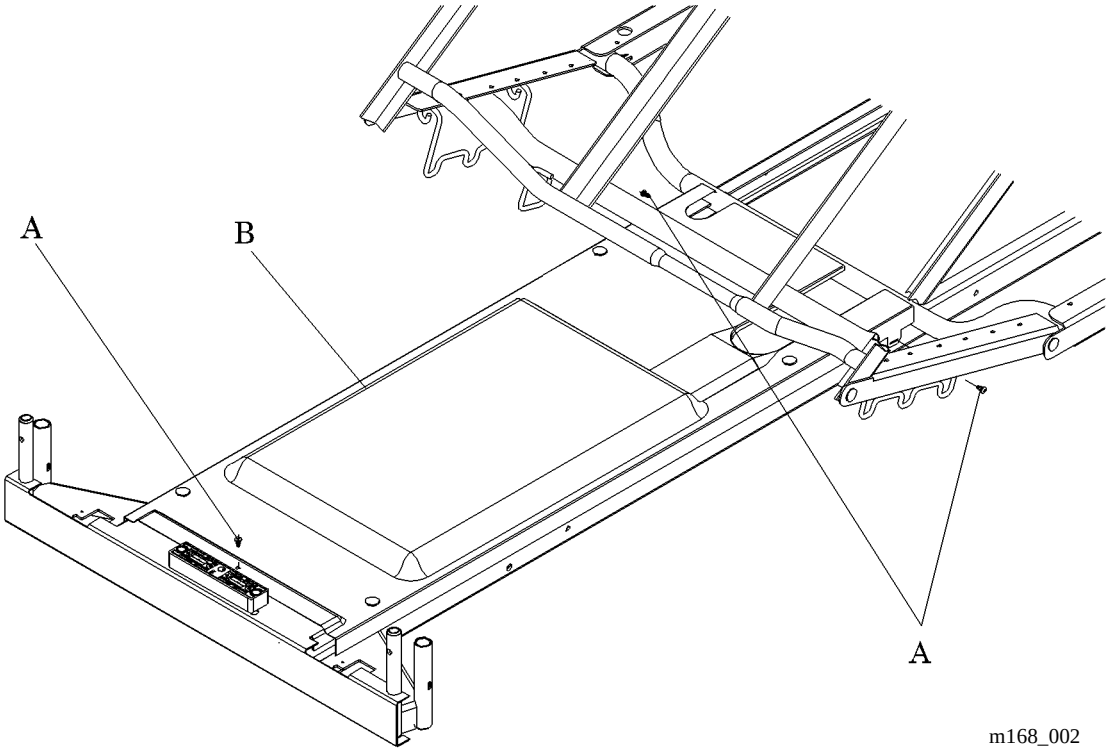

7. Lift the foot end cover (B) up at a point near the foot end of the bed, and pull it out.

Replacement

CAUTION:
Do not lower the foot section while the knee section is down and the foot end cover is removed. Severe damage to the bed could occur.

1. Place the foot end cover (B) in position on the frame.
2. Ensure that no wires or cables are caught between the foot end cover (B) and the bed frame.
3. Secure the foot end cover (B) with the screws (A).
4. Untie the foot section, and carefully lower it down onto the bed frame.

SHOCK HAZARD:
Unplug the bed from its power source. Failure to do so could result in personal injury or equipment damage.

5. Install the footboard (see “Footboard” on page 4-7) on the bed.

6. To ensure proper operation of the Advanta™ Bed, perform the “Function Checks” on page 2-6.

4.3 Headboard

Tools required: None

Removal

Grasp the hand grips (A) firmly and lift up (see figure 4-3 on page 4-12).

Figure 4-3. Headboard

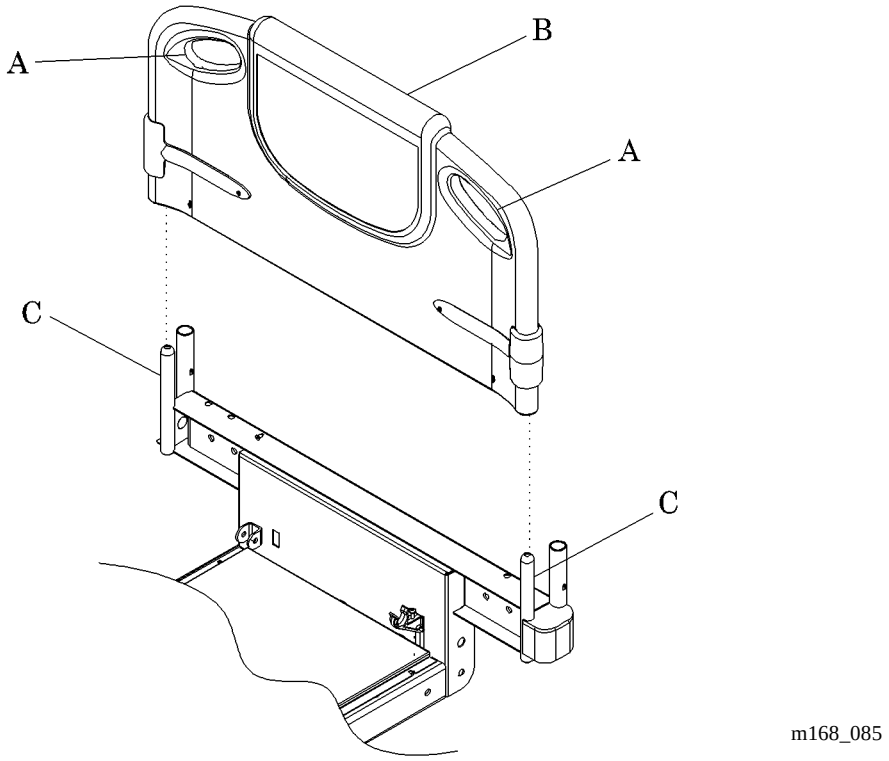

Replacement

1. Using the guide arrows on the headboard (B), align the headboard sockets with the posts (C) on the bed frame, and lower the headboard onto the posts.

2. If necessary, push the headboard down until it rests on the bed frame.

4.4 Head End Covers

Tools required: T25 Torx®[1] head screwdriver

Removal

There are two covers at the head end of the bed: a lower, stationary head end cover (A) and an upper, sliding head end cover (B) (see figure 4-4 on page 4-13).

NOTE:
Both covers must be removed in order to gain access to the motors and drives at the head end of the bed.

Figure 4-4. Head End Covers

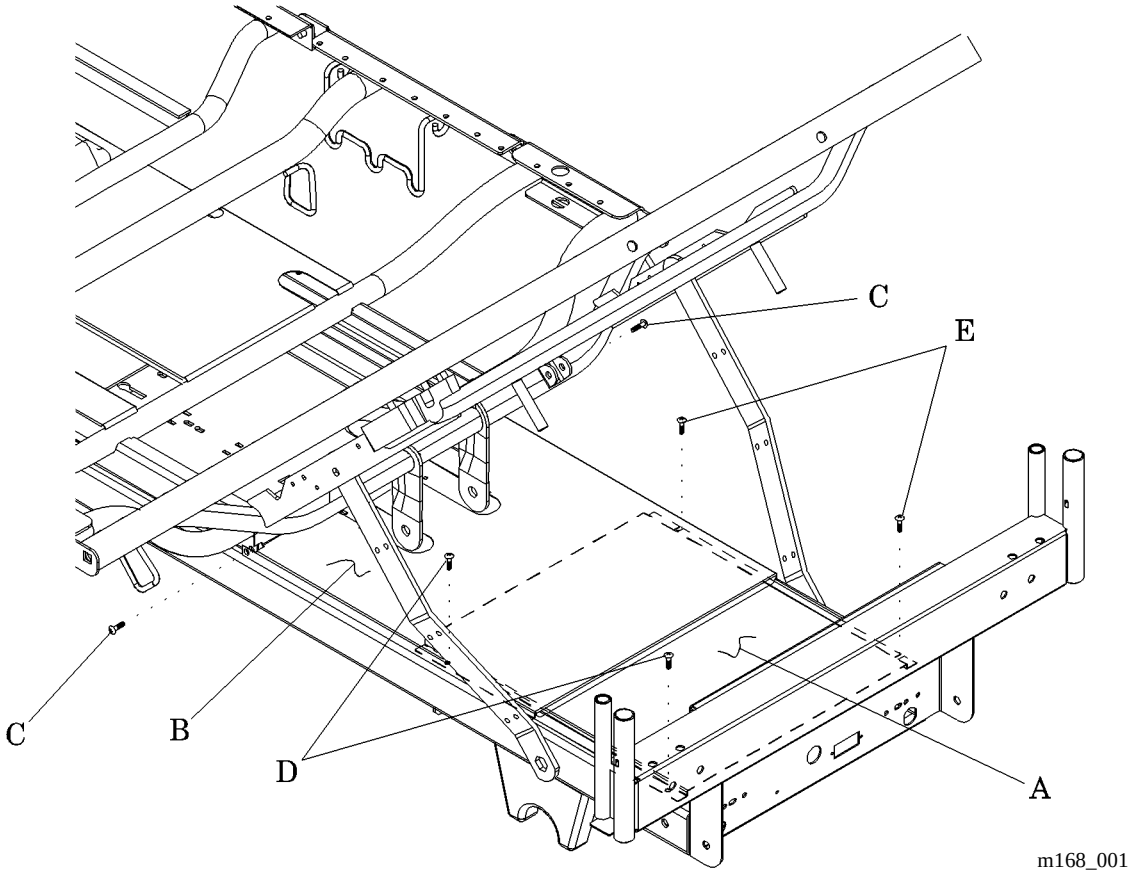

1. Raise the head section to approximately 50°.

1. Torx® is a registered trademark of Textron, Inc.

SHOCK HAZARD:
Unplug the bed from its power source. Failure to do so could result in personal injury or equipment damage.

2. Unplug the bed from its power source.
3. Using the T25 Torx®[1] head screwdriver, remove the two screws (C) from the sliding head end cover (B).
4. Lift the sliding head end cover (B) off of the bed.
5. Using the T25 Torx® head screwdriver, loosen, but do not remove, the two screws (D) on the left-hand side of the stationary head end cover (A).
6. Remove the two screws (E) from the right-hand side of the stationary head end cover (A).
7. Slide the stationary head end cover (A) off the screws (D), and remove it from the bed.

Replacement

1. Install the head end covers in the reverse order of removal.
2. To ensure proper operation of the Advanta™ Bed, perform the “Function Checks” on page 2-6.

1. Torx® is a registered trademark of Textron, Inc.

4.5 Air Control Cover

Tools required: T25 Torx®[1] head screwdriver

Removal

1. Turn off the air system power at the footboard.
2. Remove the mattress from the bed.
3. Raise the bed to the high position using the hilow function.

SHOCK HAZARD:
Unplug the bed from its power source. Failure to do so could result in personal injury or equipment damage.

4. Unplug the bed from its power source.
5. Using the T25 Torx® head screwdriver, loosen the screws (A) securing the seat section panel (B) to the bed frame (see figure 4-5 on page 4-16).

4

1. Torx® is a registered trademark of Textron, Inc.

Figure 4-5. Air Control Cover

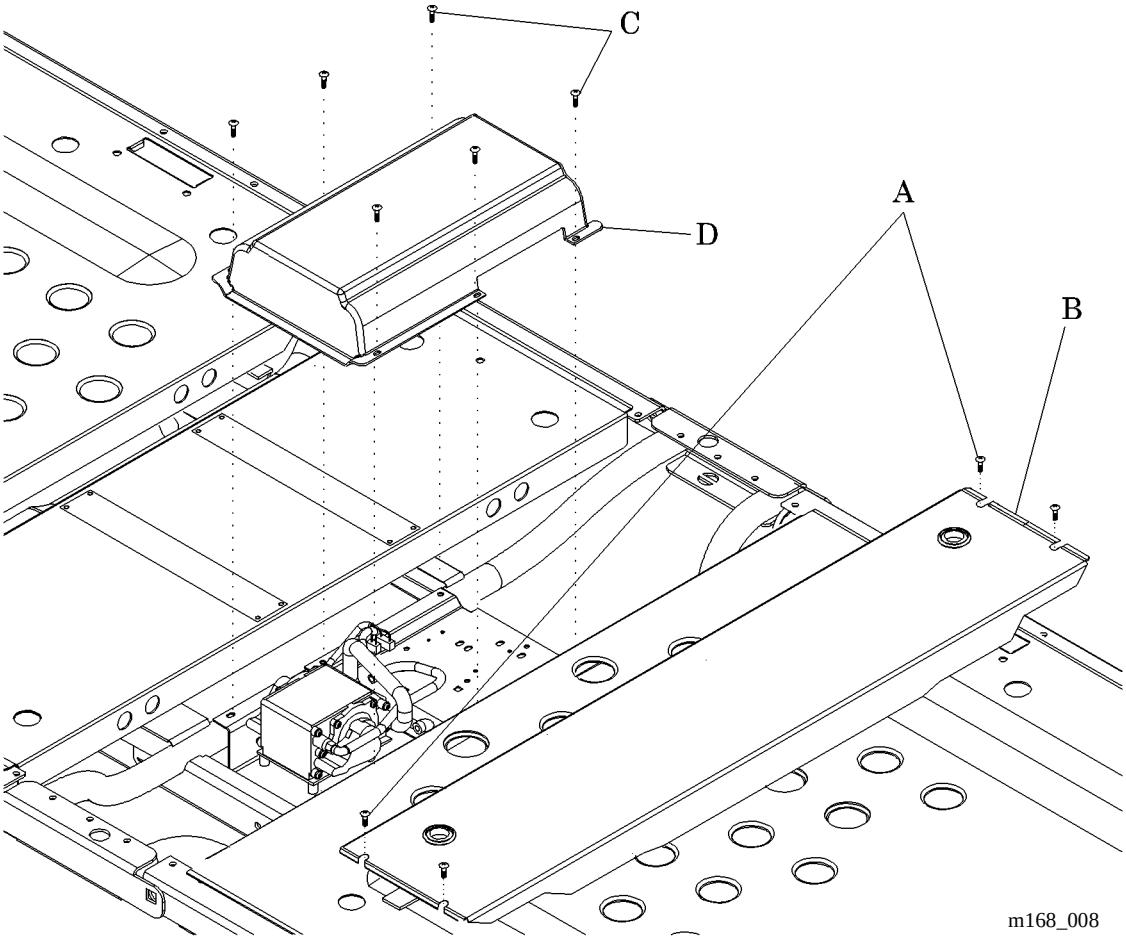

CAUTION:
If your bed is equipped with the Patient Position Monitor, do not set heavy objects directly on the pressure switches. Damage can occur to the pressure switches.

6. Place the seat section panel (B) to one side, not on the pressure switches.

7. Remove the screws (C) securing the air control cover (D) to the bed, and remove the air control cover (D) from the bed.

Replacement

1. Install the air control cover in the reverse order of removal.

2. To ensure proper operation of the Advanta™ Bed, perform the “Function Checks” on page 2-6.

4.6 Air Sleep Surface Mattress

Tools required: None

Removal

SHOCK HAZARD:
Unplug the bed from its power source. Failure to do so could result in personal injury or equipment damage.

1. Unplug the bed from its power source.
2. Lift the foot section (B) to access the air hose coupling (D) and cable connector (C) (see figure 4-6 on page 4-17).

Figure 4-6. Air Sleep Surface Mattress

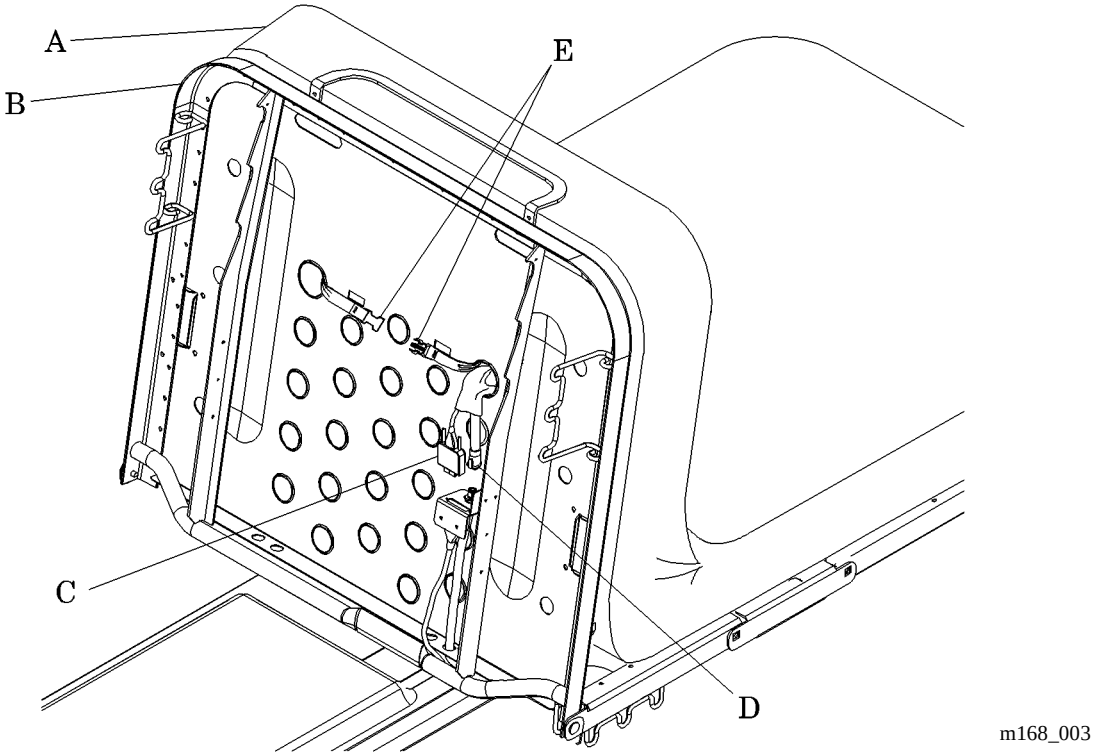

3. Depress the air hose coupling (D) to disconnect the mattress air hose from the bed.
4. Disconnect the cable connector (C).
5. Disconnect the plastic buckle (E) holding the mattress in place.

6. Remove the mattress (A) from the bed.

Replacement

1. Install the air sleep surface mattress in the reverse order of removal.
2. To ensure proper operation of the Advanta™ Bed, perform the “Function Checks” on page 2-6.

4.7 Air Sleep Surface—Sensor Control P.C. Board

Tools required: Needle nose pliers
Screwdriver
3/16" nut driver

Removal

SHOCK HAZARD:
Unplug the bed from its power source. Failure to do so could result in personal injury or equipment damage.

1. Unplug the bed from its power source.
2. Lower and store the foot end siderails.
3. Remove the footboard from the bed (see “Footboard” on page 4-7).
4. Open the mattress cover to gain access to the components in the foot end of the mattress (see “ZoneAire® Sleep Surface” on page 1-14).
5. Remove the control board cover (A) from the control board frame (B) (see figure 4-7 on page 4-20).

Figure 4-7. ZoneAire® \Sleep Surface—Sensor Control P.C. Board

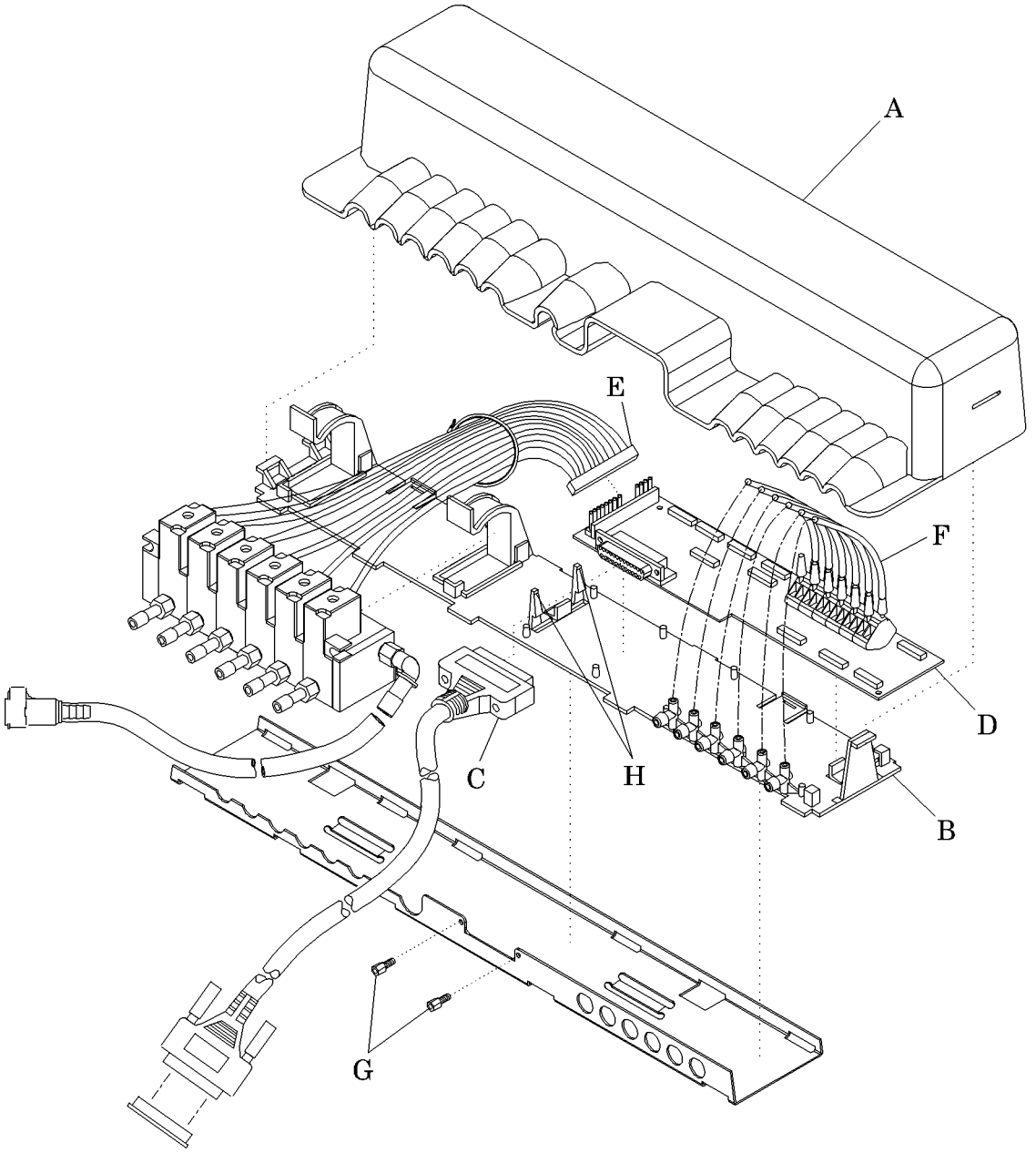

CAUTION:
To prevent component damage, ensure that your hands are clean and **only** handle the P.C. boards by their edges.

CAUTION:
When handling electronic components, wear an antistatic strap. Failure to do so, could result in component damage.

6. Using the screwdriver, disconnect the mattress cable connector (C) from the sensor control P.C. board (D).

7. Disconnect the surface valves connector (E) from the sensor control P.C. board (D).

8. Label the tan colored hoses (F), and then disconnect them from the sensor control P.C. board (D).

NOTE:
Labeling the tan colored hoses will aide during the replacement procedure.

NOTE:
The ZoneAire® mattresses have 6 hoses.

9. Using the 3/16" nut driver, loosen and remove the setscrews (G).

10. Using the needle nose pliers if necessary, push back the tabs (H) securing the sensor control P.C. board (D), and remove the sensor control P.C. board (D) from the bed.

Replacement

1. Install the air sleep sensor control P.C. board in the reverse order of removal.

2. Ensure that the setscrews (G) are torqued to 8.0 +/- 1.0 in-lb.

3. Ensure the tan colored hoses are connected correctly.

4. To ensure proper operation of the Advanta™ Bed, perform the “Function Checks” on page 2-6.

4.8 Air Sleep Surface—Surface Control Valve

Tools required: Extraction tool (P/N 429022)
Phillips head screwdriver

Removal

SHOCK HAZARD:
Unplug the bed from its power source. Failure to do so could result in personal injury or equipment damage.

1. Unplug the bed from its power source.
2. Remove the footboard from the bed (see “Footboard” on page 4-7).
3. Open the mattress cover to gain access to the components in the foot end of the mattress (see “ZoneAire® Sleep Surface” on page 1-14).
4. Remove the control board cover (see “Air Sleep Surface—Sensor Control P.C. Board” on page 4-19).
5. Disconnect the surface valves connector (A) from the sensor control P.C. board (B) (see figure 4-8 on page 4-23).

Figure 4-8. Air Sleep Surface—Surface Control Valve

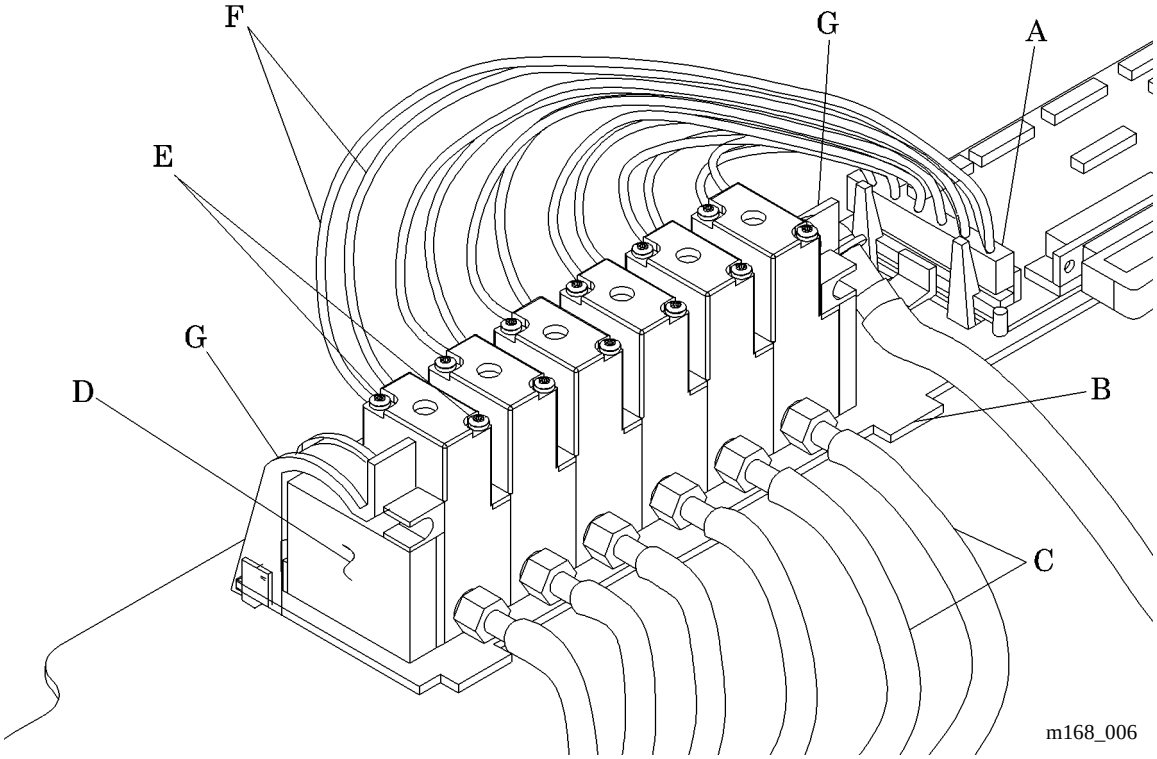

6. Label each of the air tubes (C) and the corresponding valves to aid in the replacement process.

7. Disconnect the air tubes (C) from the surface control valve assembly (D).

8. If you are removing only certain valve assemblies:
   a. Remove the air tubes (C) from the valve you are removing.
   b. Using the extraction tool, disconnect the wires (F) (two for each valve) for the valve you are removing.
   c. Using the phillips head screwdriver, remove the two screws (E) from the valve you are removing.
   d. Carefully lift the surface control valve(s) from the manifold.

9. If you are removing the entire assembly:
   a. Remove the air tubes (C) from the surface control valves.
   b. Push the valve release arms (G) on the surface control frame, and remove the complete surface control valve assembly (D).

4

Replacement

1. Install the air sleep surface control valves in the reverse order of removal.

NOTE:
Ensure that the air tubes are connected to their corresponding valves.

2. To ensure proper operation of the Advanta™ Bed, perform the “Function Checks” on page 2-6.

4.9 Air Sleep Surface—Air Control P.C. Board

Tools required: Needle nose pliers
Flat head screwdriver

Removal

1. Raise the bed to the high position using the hilow function.

SHOCK HAZARD:
Unplug the bed from its power source. Failure to do so could result in personal injury or equipment damage.

2. Unplug the bed from its power source.

3. Remove the mattress from the bed (see “Air Sleep Surface Mattress” on page 4-17).

4. Remove the seat section panel and air control cover from the bed (see “Air Control Cover” on page 4-15).

5. Disconnect the connectors (A) going to the air control P.C. board (C) (see figure 4-9 on page 4-26).

Figure 4-9. Air Sleep Surface—Air Control P.C. Board

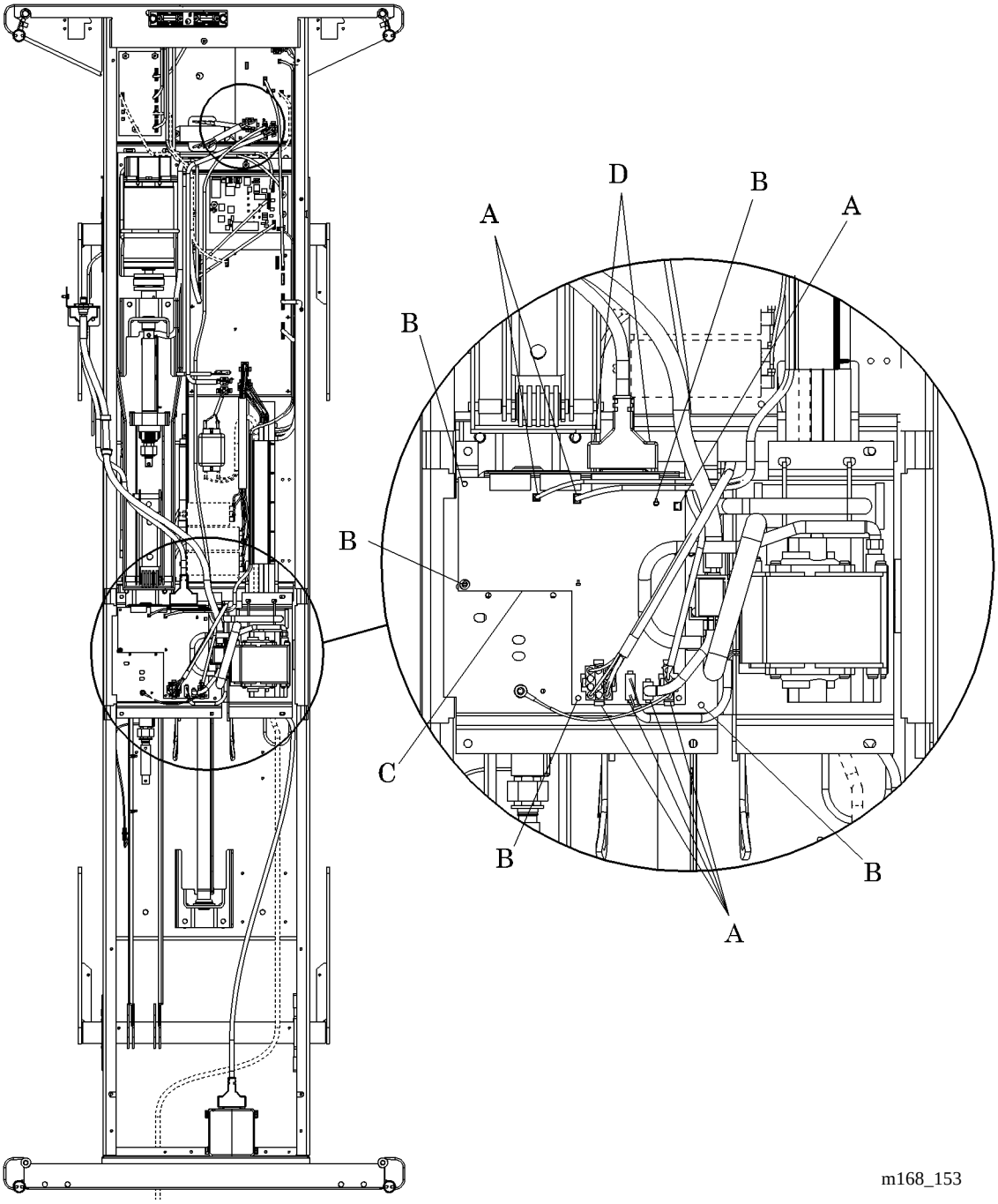

6. Using the small flat head screwdriver, remove the two screw locks (D) on the connector.

CAUTION:
To prevent component damage, ensure that your hands are clean and **only** handle the P.C. boards by their edges.

CAUTION:
When handling electronic components, wear an antistatic strap. Failure to do so, could result in component damage.

7. Using the needle nose pliers, if necessary, compress the 5 standoffs (B) and remove the air control P.C. board (C).

Replacement

1. Install the air control P.C. board in the reverse order of removal.

2. To ensure proper operation of the Advanta™ Bed, perform the “Function Checks” on page 2-6.

4.10 Air Sleep Surface—Switching Valve Assembly

Tools required: Screwdriver

Removal

1. Raise the bed to the high position using the hilow function.

SHOCK HAZARD:
Unplug the bed from its power source. Failure to do so could result in personal injury or equipment damage.

2. Unplug the bed from its power source.

3. Remove the mattress from the bed (see “Air Sleep Surface Mattress” on page 4-17).

4. Remove the seat section panel and air control cover from the bed (see “Air Control Cover” on page 4-15).

5. Disconnect the connector (A) going to the air control P.C. board (see figure 4-10 on page 4-29).

Figure 4-10. Air Sleep Surface—Switching Valve Assembly

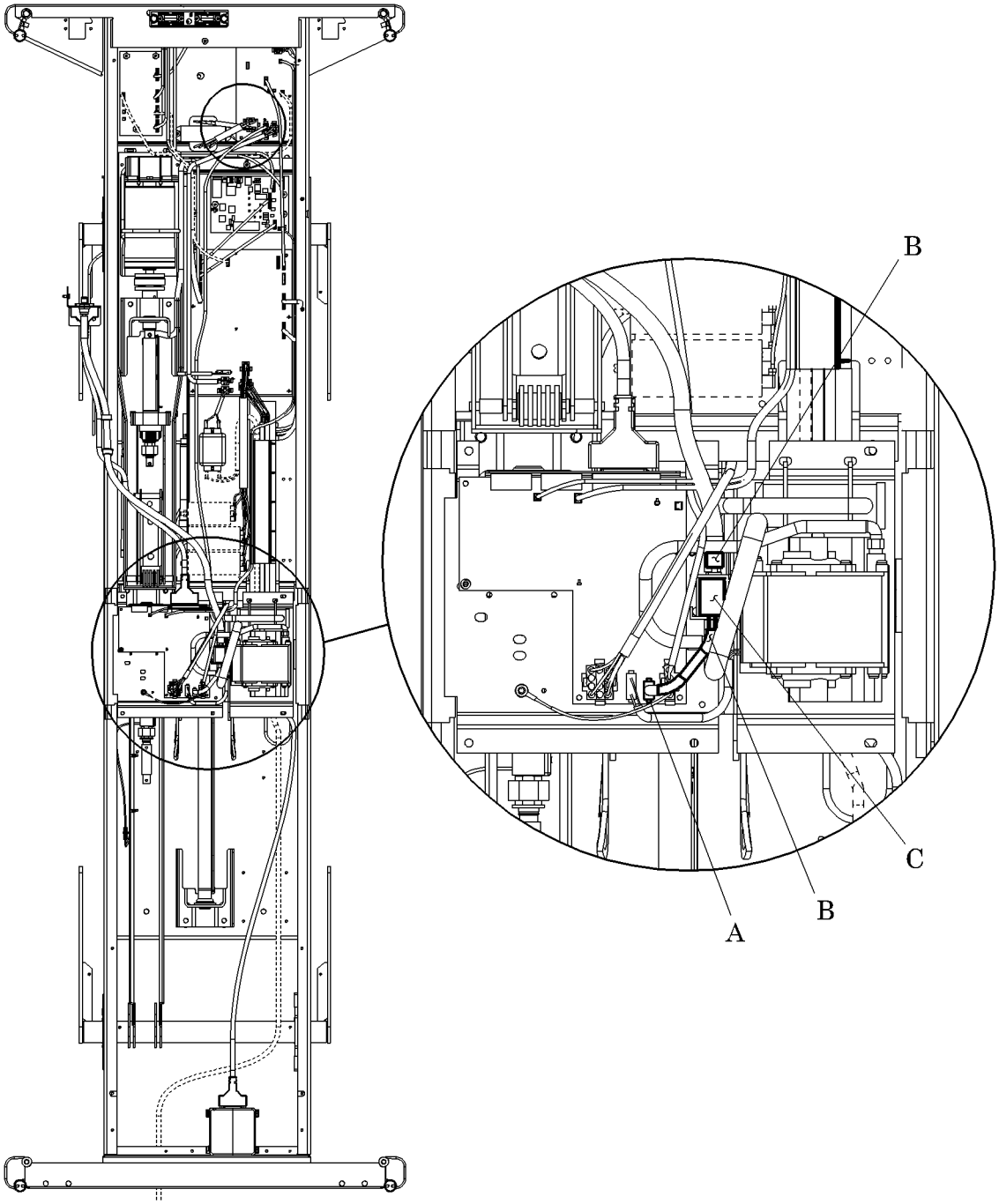

m168_154

6. Remove the four hoses (B) connected to the switching valve assembly (C).

7. Insert the screwdriver under the switching valve assembly (C).

8. Carefully pry up the switching valve assembly (C), and lift it out of the pump module base assembly.

Replacement

1. Install the air sleep surface switching valve assembly in the reverse order of removal.

2. To ensure proper operation of the Advanta™ Bed, perform the “Function Checks” on page 2-6.

4.11 Air Sleep Surface—Transformer

Tools required: T25 Torx®[1] head screwdriver
Small wire cutters
3/8" nut driver

Removal

1. Raise the bed to the high position using the hilow function.

SHOCK HAZARD:
Unplug the bed from its power source. Failure to do so could result in personal injury or equipment damage.

2. Unplug the bed from its power source.
3. Remove the mattress from the bed (see “Air Sleep Surface Mattress” on page 4-17).
4. Remove the footboard (see “Footboard” on page 4-7).
5. Remove the foot end cover from the bed (see “Foot End Cover” on page 4-9).
6. Using a 3/8" nutdriver, remove the nut (D) securing the circuit board pan (E) (see figure 4-11 on page 4-32).

4

1. Torx® is a registered trademark of Textron, Inc.

Figure 4-11. Air Sleep Surface—Transformer

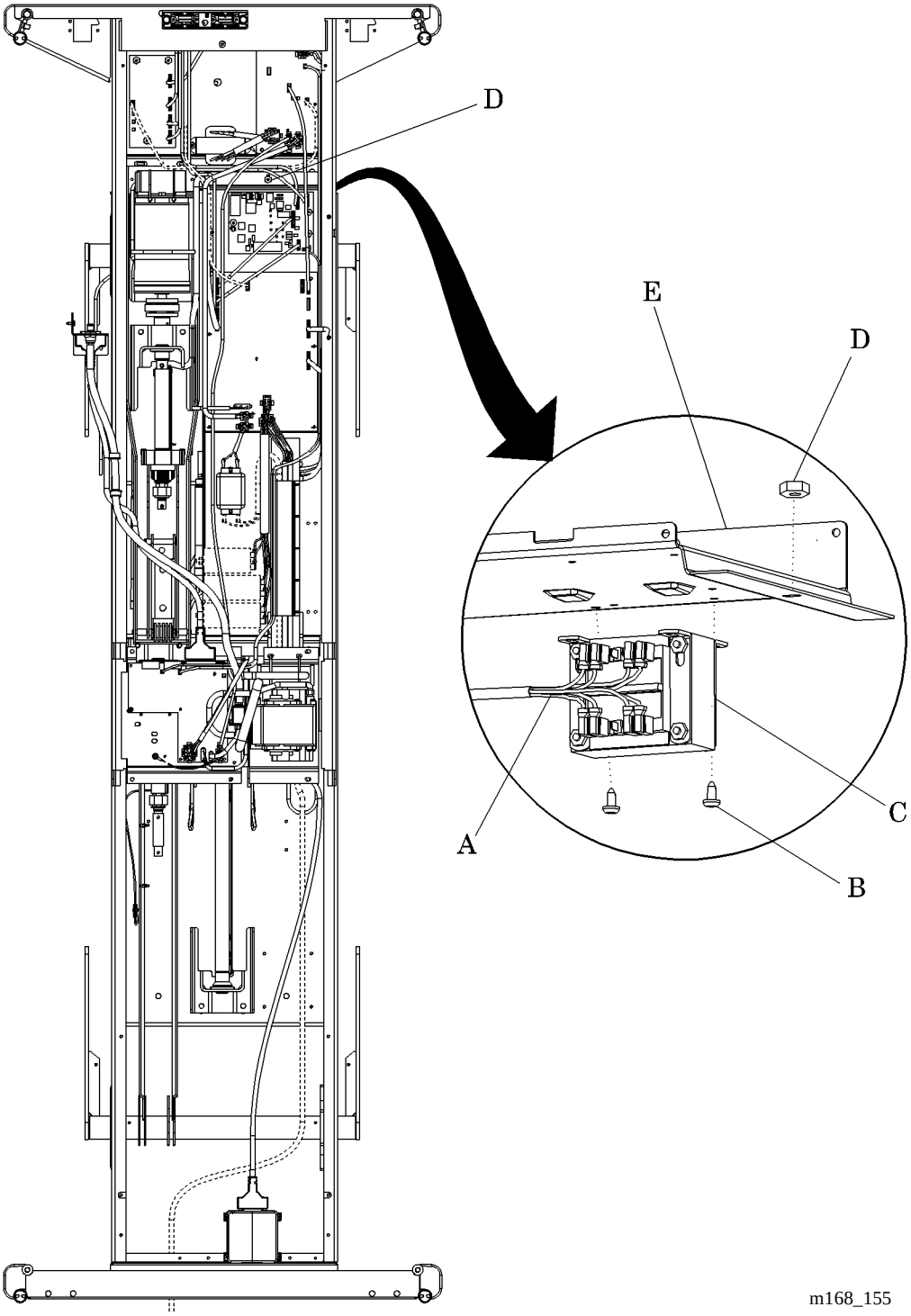

7. Using the small wire cutters, cut the wire ties securing the wires to the bed.

8. To access the transformer (C), carefully lift the circuit board pan (E).

9. Using the Torx® head screwdriver, remove the two screws (B) securing the transformer (C) to the circuit board pan (E)

10. Separate the transformer (C) from the circuit board pan (E).

11. One at a time, disconnect the wires (A) from the transformer (C).

Replacement

1. Connect the wires (A) to the new transformer connectors. See table 4-1 on page 4-33.

Table 4-1. Transformer Connections

Connector #	Wire Color
1	Black
2	Brown
3	no wire
4	no wire
5	Red
6	Orange
7	Yellow
8	Blue
9	no wire
10	no wire
11	Blue
12	Violet

CAUTION:
Ensure that the wires are attached to the correct connector. Failure to do so could result in equipment damage.

2. Secure the new transformer to the circuit board pan (E) in the reverse order of removal.

3. To ensure proper operation of the Advanta™ Bed, perform the “Function Checks” on page 2-6.

4.12 Air Sleep Surface—Compressor

Tools required: T25 Torx®[1] head screwdriver
Phillips head screwdriver
Small wire cutters
Screwdriver

Removal

1. Raise the bed to the high position using the hilow function.

SHOCK HAZARD:
Unplug the bed from its power source. Failure to do so could result in personal injury or equipment damage.

2. Unplug the bed from its power source.

3. Remove the mattress from the bed (see “Air Sleep Surface Mattress” on page 4-17).

4. Remove the seat section panel and air control cover from the bed (see “Air Control Cover” on page 4-15).

5. Using the small flat head screwdriver, remove the two screw locks (D) on the connector (A) (see figure 4-12 on page 4-35).

1. Torx® is a registered trademark of Textron, Inc.

Figure 4-12. Air Sleep Surface—Compressor

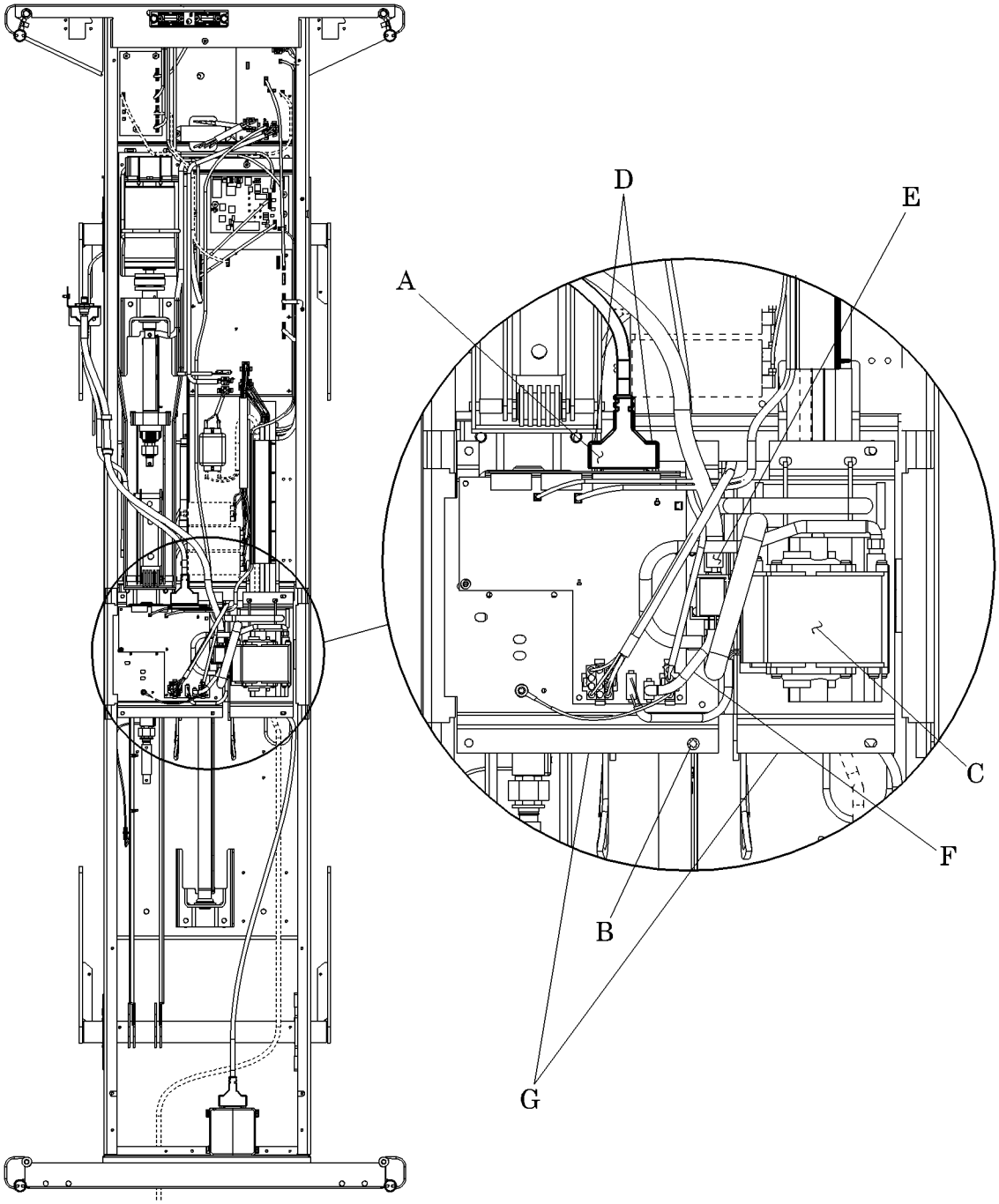

6. Disconnect the connector (A) going from the air control P.C. board.

7. Using the T25 Torx®[1] head screwdriver, remove the screw (B) securing the air system weld assembly to the frame of the bed.

8. Carefully lift up the air system weld assembly (C) and place it on the thigh section of the sleep surface.

9. Using the small wire cutters, cut the cable tie holding the large air hose to the compressor (C).

CAUTION:
Use caution when removing the air hoses from the air sleep surface solenoid. The fittings are plastic and can break if handled too roughly during the removal process.

NOTE:
For easier removal, push the air hoses from behind and off of the fittings. The hoses will not come off if you try to pull them.

10. Disconnect both the large (E) and small (F) air hoses from the compressor (C).

11. Using the phillips head screwdriver, remove the four screws from the bottom of the compressor (C).

12. Separate the compressor (C) from the air system weld assembly (G).

Replacement

1. Install the compressor (C) in the reverse order of removal.

CAUTION:
Attach the large air hose to the air sleep surface compressor with a cable tie. If the hose becomes unattached during operation, equipment damage could occur.

2. To ensure proper operation of the Advanta™ Bed, perform the “Function Checks” on page 2-6.

1. Torx® is a registered trademark of Textron, Inc.

4.13 Footboard Control Panel—P.C. Boards and Cables

Tools required: Phillips head screwdriver
T10 Torx®[1] head screwdriver

Removal

CAUTION:
Unplug the bed from its power source. Failure to do so could result in equipment damage.

1. Unplug the bed from its power source.
2. Remove the footboard (see “Footboard” on page 4-7).
3. Using the phillips head screwdriver or the T10 Torx® head screwdriver, remove the two screws (A) that secure the footboard control panel (B) to the footboard (C) (see figure 4-13 on page 4-38).

NOTE:
The screws may be covered by small plastic plugs which need to be removed to gain access to the screws.

4

1. Torx® is a registered trademark of Textron, Inc.

Figure 4-13. Footboard Control Panel—P.C. Boards and Cables

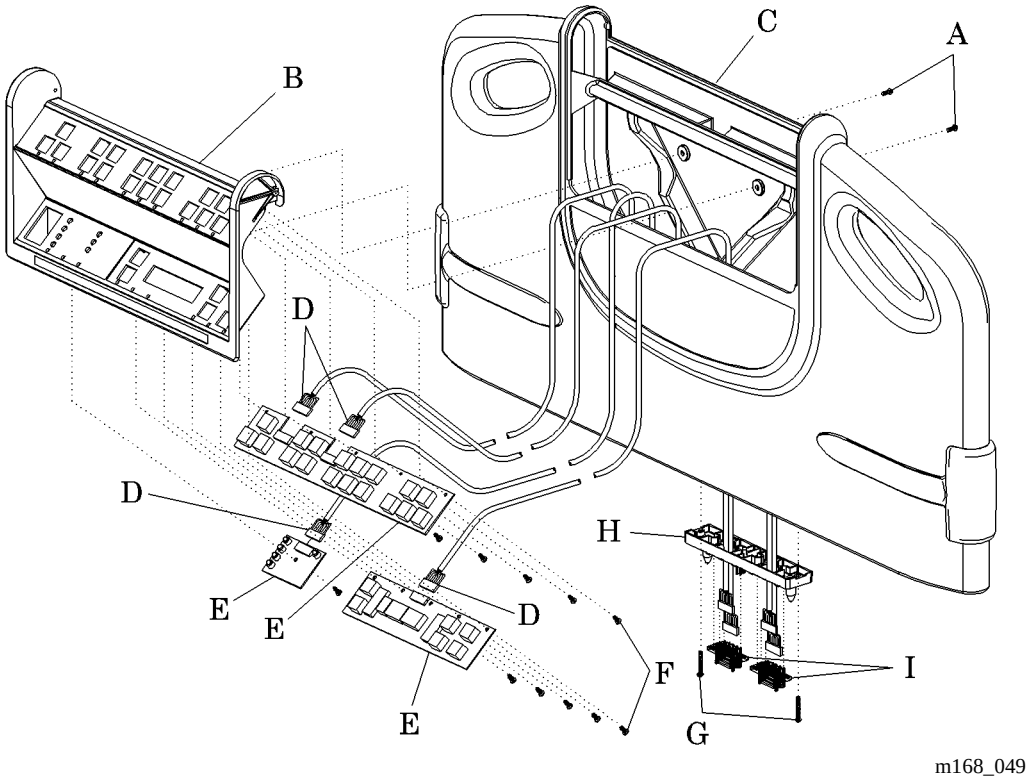

4. Carefully lift the footboard control panel (B) straight up from the footboard (C).

CAUTION:
Be careful not to damage the cables when removing the footboard control panel.

5. Unplug the cables (D) from the P.C. board assemblies.

6. To remove a P.C. board assembly (E), proceed as follows:
   a. Using the T10 Torx® head screwdriver, remove the screws (F) securing the P.C. board assembly (E) to the footboard control panel (B).
   b. Carefully remove the P.C. board assembly (E) from the footboard control panel (B).

7. To remove a cable (D), proceed as follows:

a. Using the phillips head screwdriver, remove the two screws (G) that secure the connector plate (H) to the footboard (C).

b. Remove the appropriate black connector (I) from the connector plate (H) by unsnapping it.

c. Remove the appropriate cable (D) from the footboard (C).

Replacement

NOTE:
The connector plate has the cable color names molded into the plastic. When assembling the black connector to the connector plate, use the cable colors to correctly position the connectors. One corner of the black connector is cut at a 45° angle to facilitate correct assembly.

1. If you are replacing a cable, proceed as follows:
   a. Install the appropriate cable(s) (D) in the footboard (C).
   b. Route the cable (D) up through the bottom of the connector plate (H), and snap the black connector (I) into place on the connector plate (H)
   c. Using the phillips head screwdriver, secure the connector plate (H) to the footboard with the two screws (G).
2. If you are replacing a P.C. board assembly (E), proceed as follows:
   a. Place the P.C. board assembly (E) on the correct spot on the footboard control panel (B), and secure it with the screws (F).
   b. Connect the cables (D) to the P.C. board assembly (E).
3. Lower the footboard control panel (B) into the footboard (C) carefully, being sure not to damage any of the cables (D).
4. Secure the footboard control panel (B) to the footboard (C) with the two screws (A).

NOTE:
If plastic plugs were covering the screws, replace and secure them.

5. To ensure proper operation of the Advanta™ Bed, perform the “Function Checks” on page 2-6.

4.14 Motor Cover Assembly

Tools required: T25 Torx®[1] head screwdriver

Removal

When the motor cover assembly is removed, many of the mechanical and electrical components of the bed can be easily accessed.

1. Raise the bed to the high position using the hilow function.

SHOCK HAZARD:
Unplug the bed from its power source. Failure to do so could result in personal injury or equipment damage.

2. Unplug the bed from its power source.

3. Using the T25 Torx® head screwdriver, loosen, but do not remove the two screws (A) (see figure 4-14 on page 4-40).

Figure 4-14. Motor Cover Assembly

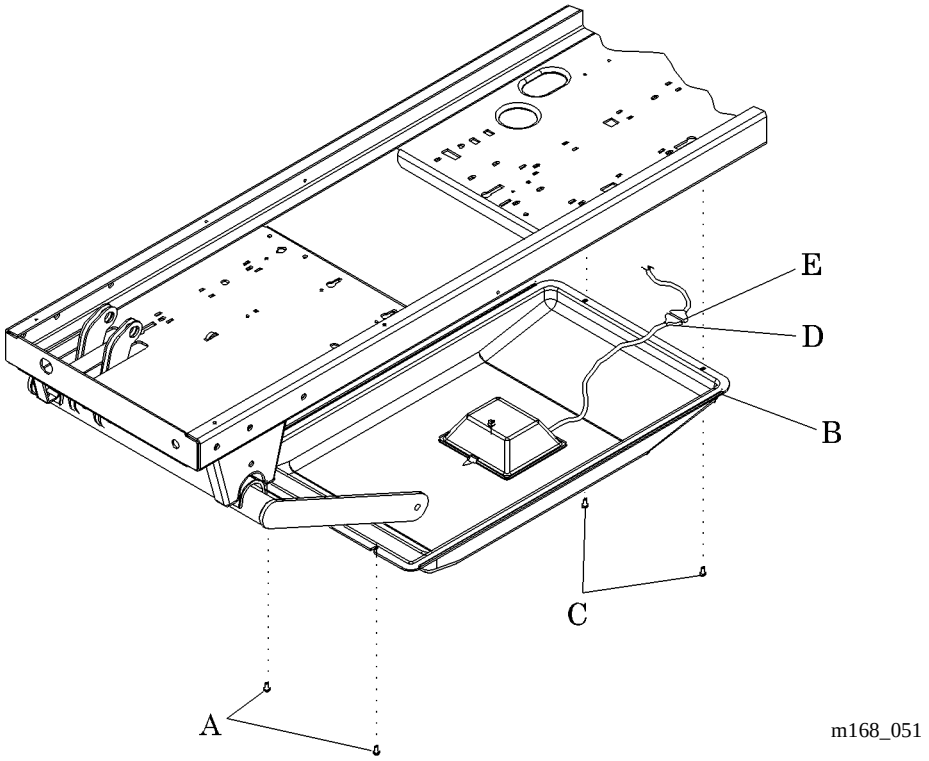

1. Torx® is a registered trademark of Textron, Inc.

4. Remove the two screws (C) at the head end side of the motor cover assembly (B).

5. Slide the assembly toward the head of the bed until the motor cover assembly (B) is free of the two screws (A), and carefully lower.

6. Disconnect the night light cable connector (D), and remove the motor cover assembly (B) from the bed.

Replacement

1. Install the motor cover assembly (B) in the reverse order of removal.

2. To ensure proper operation of the Advanta™ Bed, perform the “Function Checks” on page 2-6.

4.15 Night Light Bulb

Tools required: None

Removal

1. Raise the bed to the high position using the hilow function.

2. Unclip the night light lens (A), located on the bottom of the motor cover (B) (see figure 4-15 on page 4-42).

Figure 4-15. Night Light Bulb

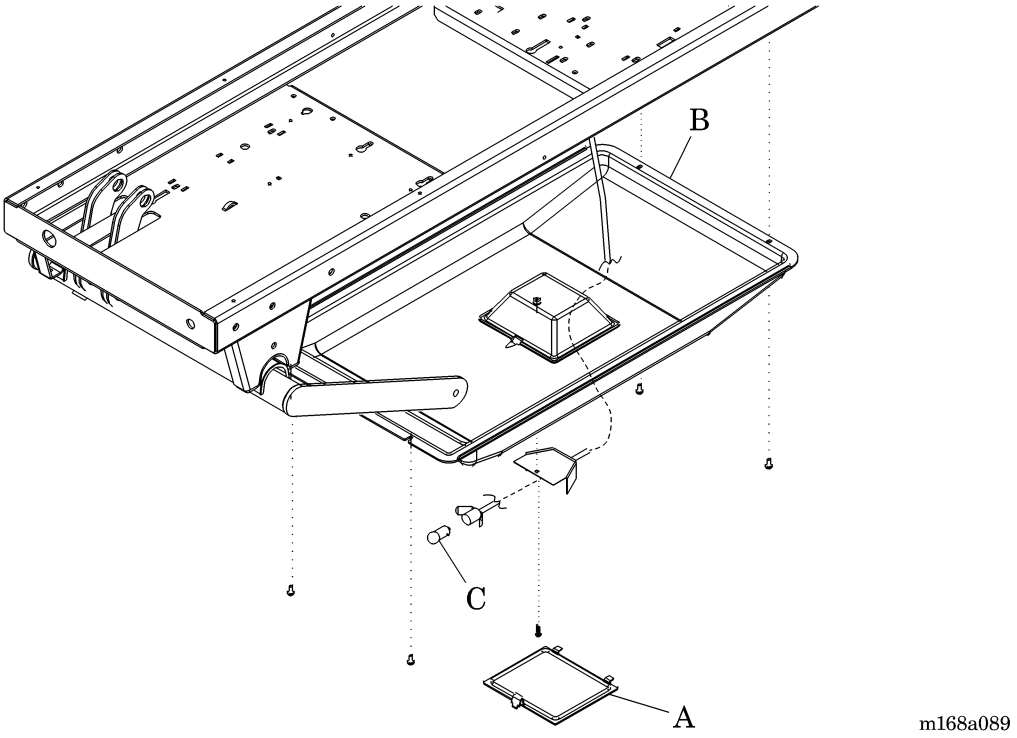

3. Push the night light bulb (C) in, and turn it counterclockwise to remove it.

Replacement

1. Install the night light bulb in the reverse order of removal.

2. To ensure proper operation of the Advanta™ Bed, perform the “Function Checks” on page 2-6.

4.16 Cable Conduit and Cable Assembly

Tools required: T25 Torx®[1] head screwdriver

Removal

Replace the cable conduit and cable assembly as a complete unit.

1. Remove the mattress from the bed (see “Air Sleep Surface Mattress” on page 4-17).

1. Remove the foot end cover (see “Foot End Cover” on page 4-9).

2. Remove the seat section cover and the air control cover (see “Air Control Cover” on page 4-15).

SHOCK HAZARD:
Unplug the bed from its power source. Failure to do so could result in personal injury or equipment damage.

3. Remove the motor cover (see “Motor Cover Assembly” on page 4-40).

4. Remove the hilow foot motor (see “Hilow Foot Motor” on page 4-51).

5. Remove the two screws (A) connecting the air system weld assembly (B) to the retracting frame (see figure 4-16 on page 4-44).

4

1. Torx® is a registered trademark of Textron, Inc.

Figure 4-16. Air System Weld Assembly

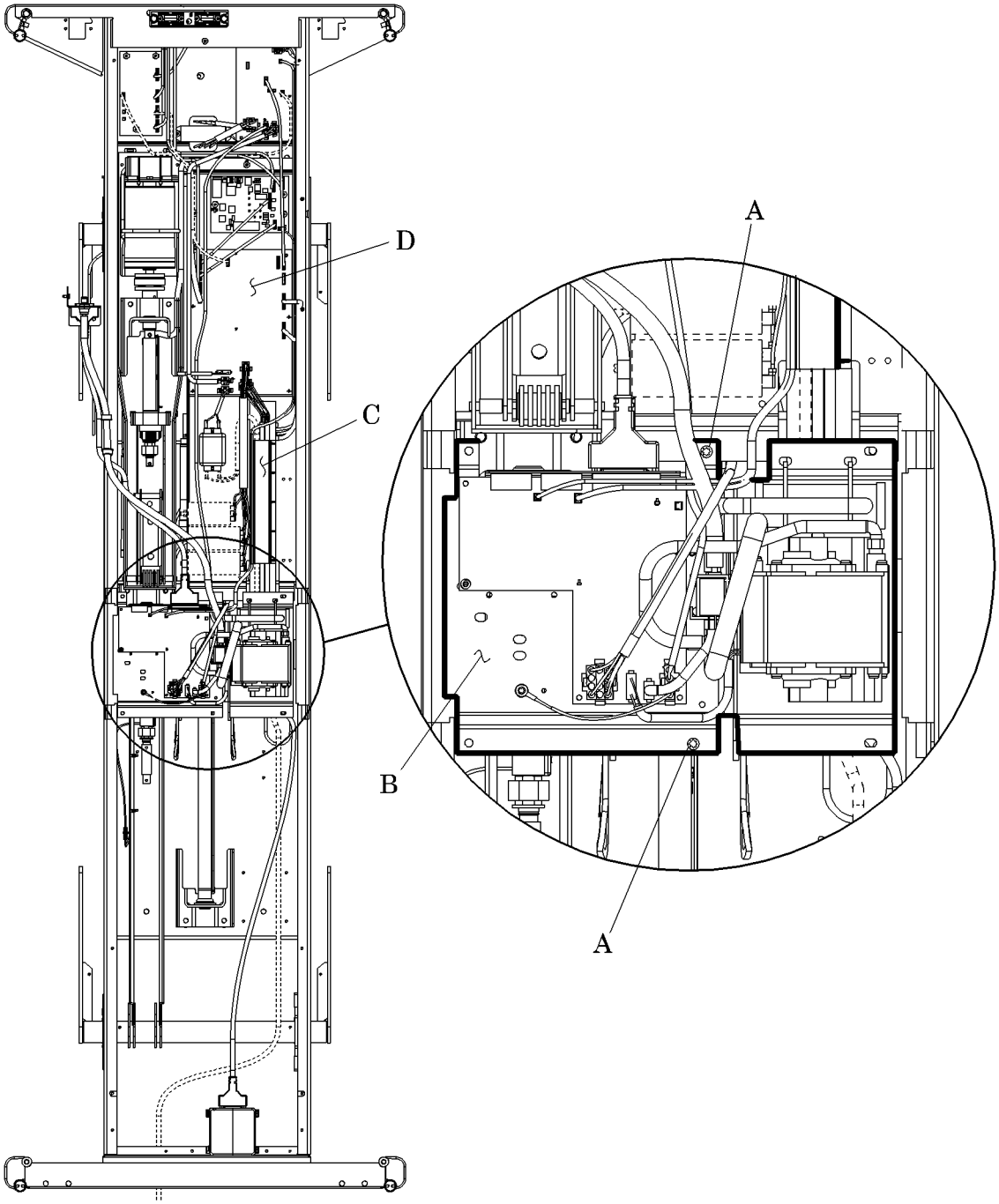

6. Detach the cable conduit (C) from the bed frame by releasing the clips (I) under the bed (see figure 4-17 on page 4-45).

Figure 4-17. Cable Conduit and Cable Assembly

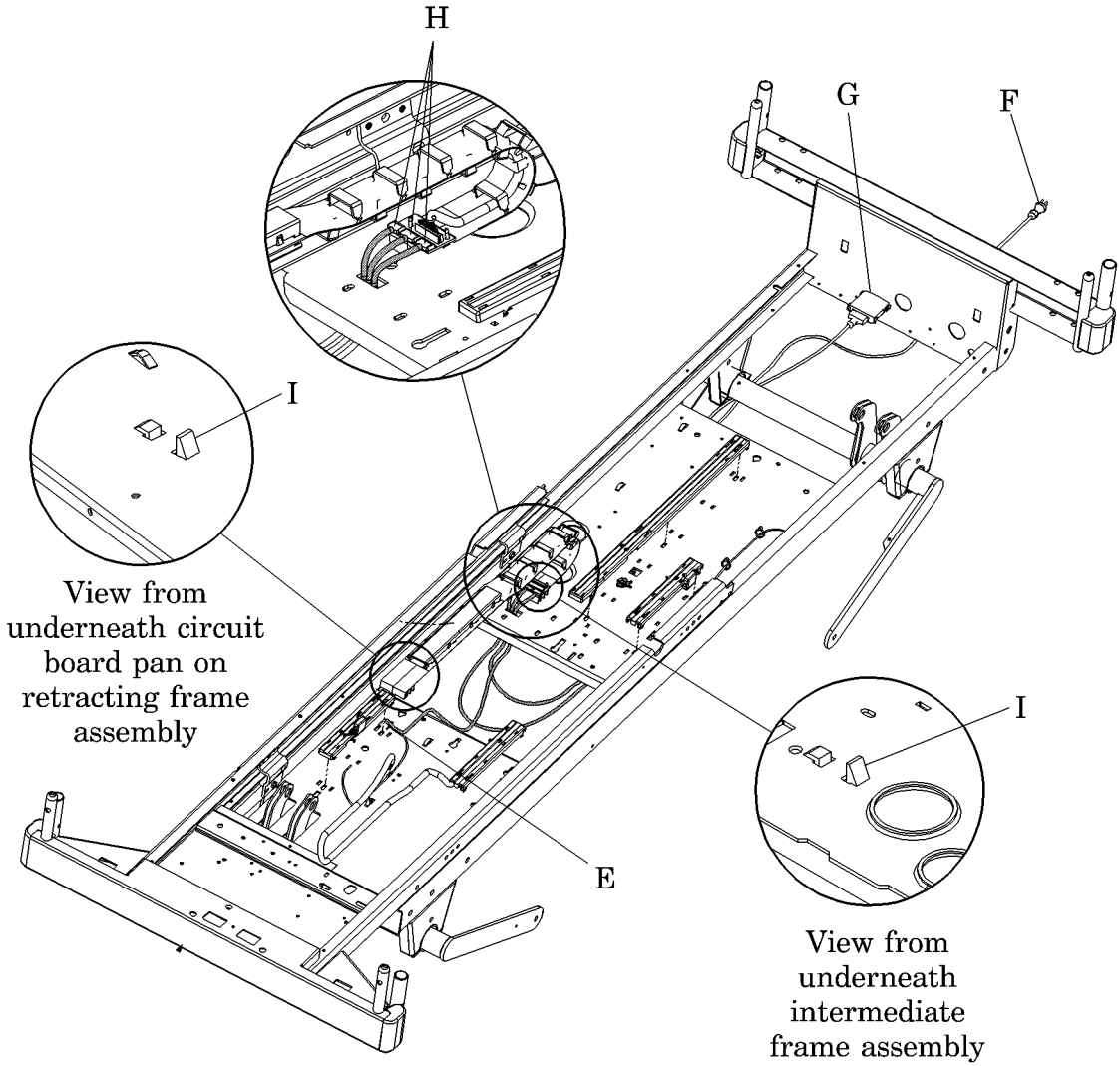

7. Remove the screw attaching the ground wire to the air system weld assembly (B).

8. Unplug all of the cables in the cable conduit from the logic board (E).

9. Unplug all of the remaining cables plugged into the P.C. boards mounted on the circuit board pan (D).

10. Lift the air system weld assembly to reveal the lower end of the cable .

11. Unplug the cables at the lower end of the cable conduit (H).

12. Detach the lower end of the cable conduit from the retracting frame.

13. Cut the wire ties.

14. Remove the screw and clamp attaching the power cable (F) to the bed frame.

15. Remove the power cable connector (F).

16. Remove the communications cable connector (G).

17. Remove the cable conduit/cable assembly from the bed as a complete unit by pulling it through the head end of the bed.

Replacement

1. Install the cable conduit/cable assembly in the reverse order of removal.

2. To ensure proper operation of the Advanta™ Bed, perform the “Function Checks” on page 2-6.

4.17 Head Motor

Tools required: T25 Torx®[1] head screwdriver

Removal

1. Raise the bed to the high position using the hilow function.

SHOCK HAZARD:
Unplug the bed from its power source. Failure to do so could result in personal injury or equipment damage.

2. Unplug the bed from its power source.

3. Remove the motor cover (see “Motor Cover Assembly” on page 4-40).

4. Disconnect the head motor power cable (A) (see figure 4-18 on page 4-47).

Figure 4-18. Head Motor

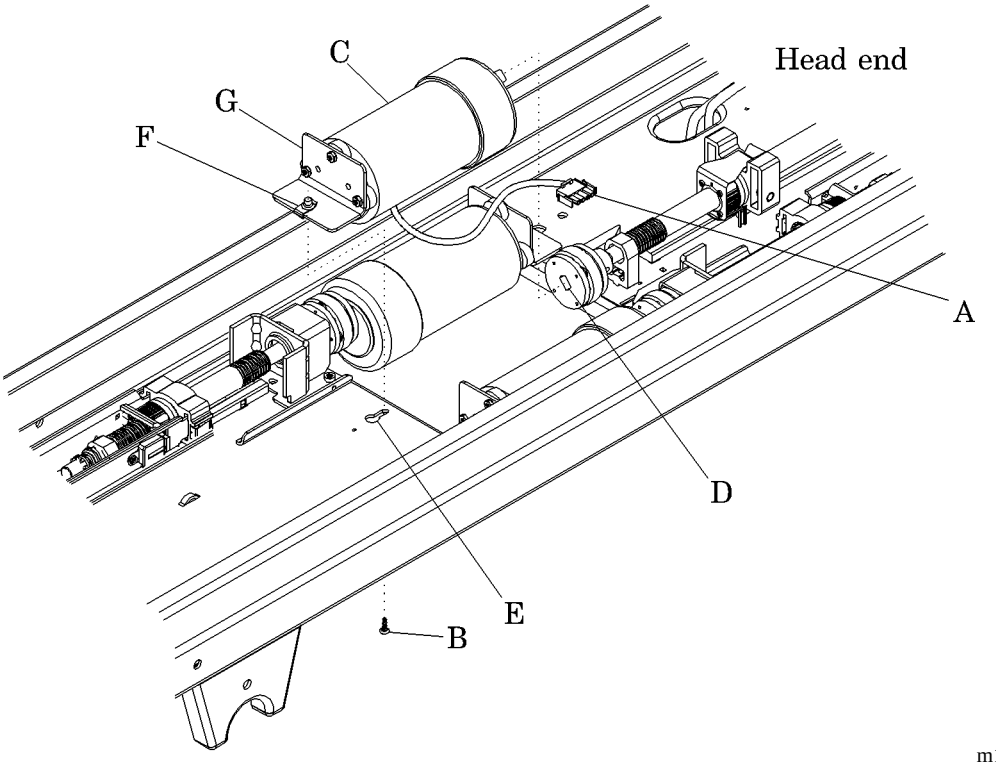

1. Torx® is a registered trademark of Textron, Inc.

5. Using the T25 Torx®[1] head screwdriver, loosen, but do not remove, the screw (B).

6. If you remove the screw entirely, be sure to retrieve the clipnut (F), which could come off the motor bracket (G).

7. Carefully support the head motor (C) with your hands and slide the motor towards the foot end of the bed until the following occurs:
   - The shaft disengages from the drive screw coupling (D)
   - The screw (B) reaches the open end of the key hole slot (E).

8. Angle the head motor (C), and lower it out of the bed.

Replacement

1. Install the head motor (C) in the bed at an angle, so that the screw (B) goes through the keyhole slot (E), and the motor shaft engages the drive screw coupling (D).

2. Slide the head motor (C) towards the head end of the bed until the screw (B) touches the narrow end of the keyhole slot (E), and the motor shaft fully engages the drive screw coupling (D).

3. Tighten the screw (B) fully, securing the head motor (C) to the bed frame.

4. Connect the head motor power cable (A).

5. Install the motor cover (see “Motor Cover Assembly” on page 4-40).

6. Plug the bed into an appropriate power source.

7. Test the head up and head down functions of the bed, and ensure they are working properly.

8. To ensure proper operation of the Advanta™ Bed, perform the “Function Checks” on page 2-6.

1. Torx® is a registered trademark of Textron, Inc.

4.18 Hilow Head Motor

Tools required: T25 Torx®[1] head screwdriver

Removal

1. Raise the bed to the high position using the hilow function.

SHOCK HAZARD:
Unplug the bed from its power source. Failure to do so could result in personal injury or equipment damage.

2. Unplug the bed from its power source.

3. Remove the motor cover (see “Motor Cover Assembly” on page 4-40).

4. Disconnect the hilow head motor power cable (A) (see figure 4-19 on page 4-49).

Figure 4-19. Hilow Head Motor

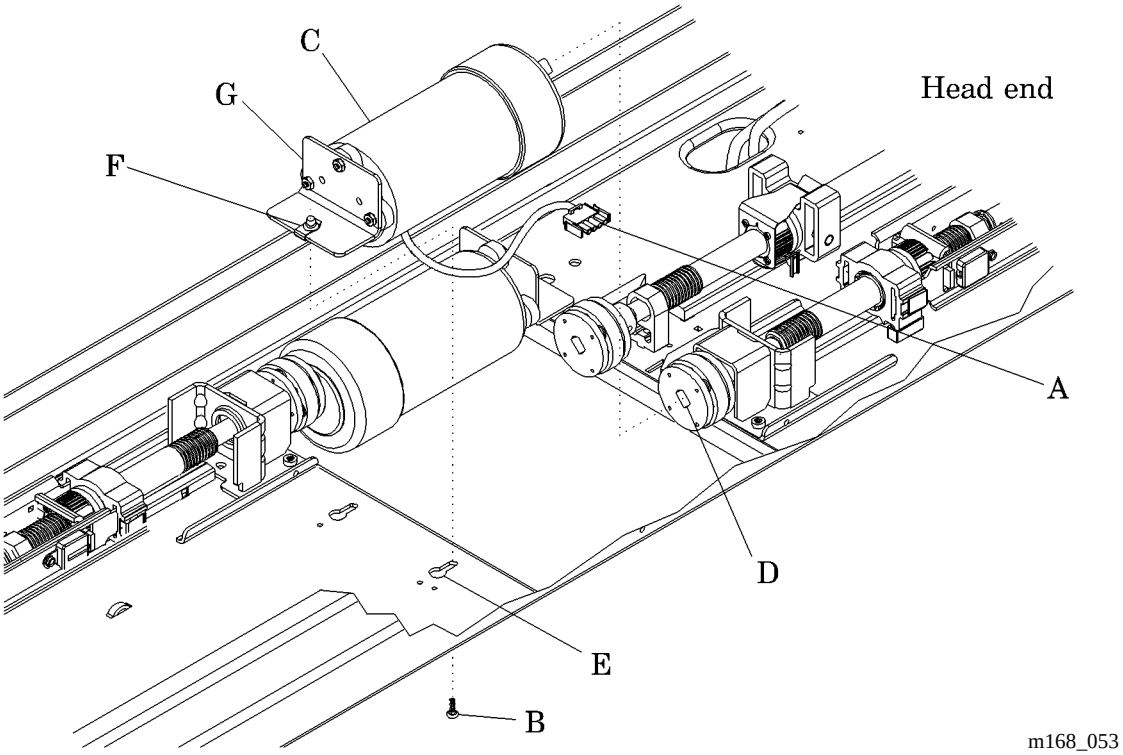

1. Torx® is a registered trademark of Textron, Inc.

5. Using the T25 Torx®[1] head screwdriver, loosen, but do not remove, the screw (B) on the hilow head motor.

6. If you remove the screw entirely, be sure to retrieve the clipnut (F), which could come off the motor bracket (G).

7. Carefully support the hilow head motor (C) with your hands and slide the motor towards the foot end of the bed until the following occurs:
   - The shaft disengages from the drive screw coupling (D).
   - The screw (B) reaches the open end of the key hole slot (E).

8. Angle the hilow head motor (C), and lower it out of the bed.

Replacement

1. Install the hilow head motor (C) in the bed at an angle, so that the screw (B) goes through the keyhole slot (E), and the motor shaft engages the drive screw coupling (D).

2. Slide the hilow head motor (C) towards the head end of the bed until the screw (B) touches the narrow end of the keyhole slot (E), and the motor shaft fully engages the drive screw coupling (D) .

3. Tighten the screw (B) fully, securing the hilow head motor (C) to the bed frame.

4. Connect the hilow head motor power cable (A).

5. Install the motor cover (see “Motor Cover Assembly” on page 4-40).

6. Plug the bed into an appropriate power source.

7. Test the hilow functions of the bed, and ensure it is working properly.

8. To ensure proper operation of the Advanta™ Bed, perform the “Function Checks” on page 2-6.

1. Torx® is a registered trademark of Textron, Inc.

4.19 Hilow Foot Motor

Tools required: T25 Torx®[1] head screwdriver

Removal

1. Raise the bed to the high position using the hilow function.

SHOCK HAZARD:
Unplug the bed from its power source. Failure to do so could result in personal injury or equipment damage.

2. Unplug the bed from its power source.

3. Remove the motor cover (see “Motor Cover Assembly” on page 4-40).

4. Disconnect the hilow foot motor power cable (A) (see figure 4-20 on page 4-51).

Figure 4-20. Hilow Foot Motor

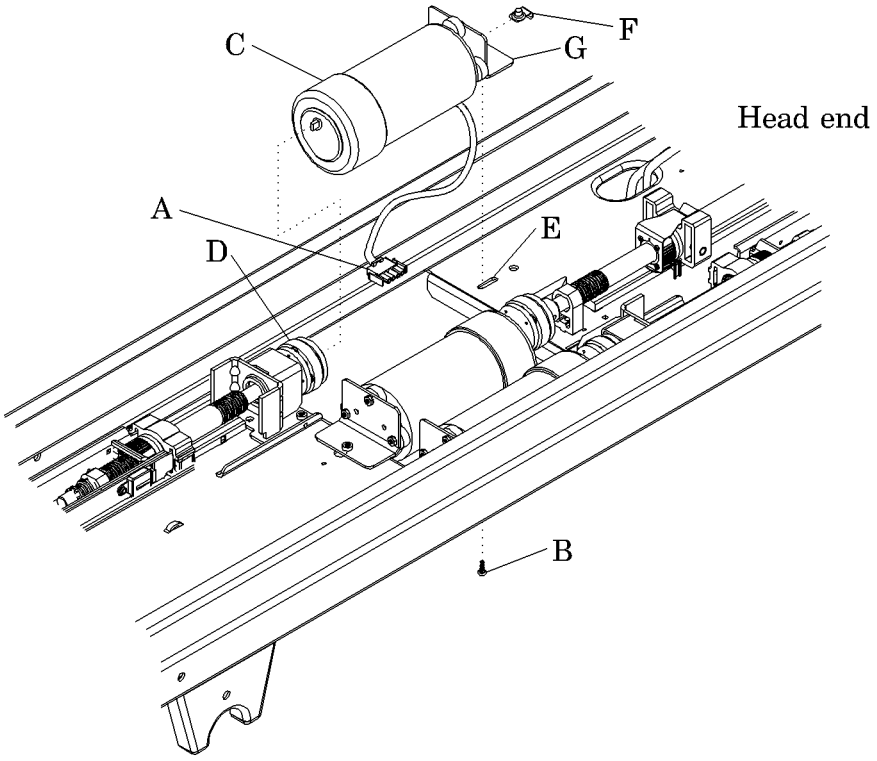

1. Torx® is a registered trademark of Textron, Inc.

5. Using the T25 Torx®[1] head screwdriver, remove the screw (B) from the hilow foot motor.

6. Be sure to retrieve the clipnut (F), which could come off the motor bracket (G).

7. Carefully support the hilow foot motor (C) with your hands and slide the motor towards the head end of the bed until the shaft disengages from the drive screw coupling (D).

8. Angle the hilow foot motor (C), and lower it out of the bed.

Replacement

1. You may need to secure the clipnut (F) to the motor bracket (G) with tape before installing the hilow foot motor (C).

2. Install the hilow foot motor (C) in the bed at an angle, so that the motor shaft engages the drive screw coupling (D), and the holes in the motor bracket (G), clipnut (F), and bed frame are aligned.

3. Slide the hilow foot motor (C) towards the foot end of the bed until the motor shaft fully engages the drive screw coupling (D).

4. Install the screw (B) through the aligned holes in the bed frame, motor bracket (G), and clipnut (F), and tighten securely.

5. Connect the hilow foot motor power cable (A).

6. Install the motor cover (see “Motor Cover Assembly” on page 4-40).

7. Plug the bed into an appropriate power source.

8. Test the hilow functions of the bed, and ensure it is working properly.

9. To ensure proper operation of the Advanta™ Bed, perform the “Function Checks” on page 2-6.

1. Torx® is a registered trademark of Textron, Inc.

4.20 Knee Motor

Tools required: T25 Torx®[1] head screwdriver

Removal

1. Raise the bed to the high position using the hilow function.
2. Raise the knee section to the high position using the knee function.
3. Lower the head section.

SHOCK HAZARD:
Unplug the bed from its power source. Failure to do so could result in personal injury or equipment damage.

4. Unplug the bed from its power source.
5. Remove the foot end cover (see “Foot End Cover” on page 4-9).
6. Disconnect the knee motor power cable (A) (see figure 4-21 on page 4-54).

4

1. Torx® is a registered trademark of Textron, Inc.

Figure 4-21. Knee Motor

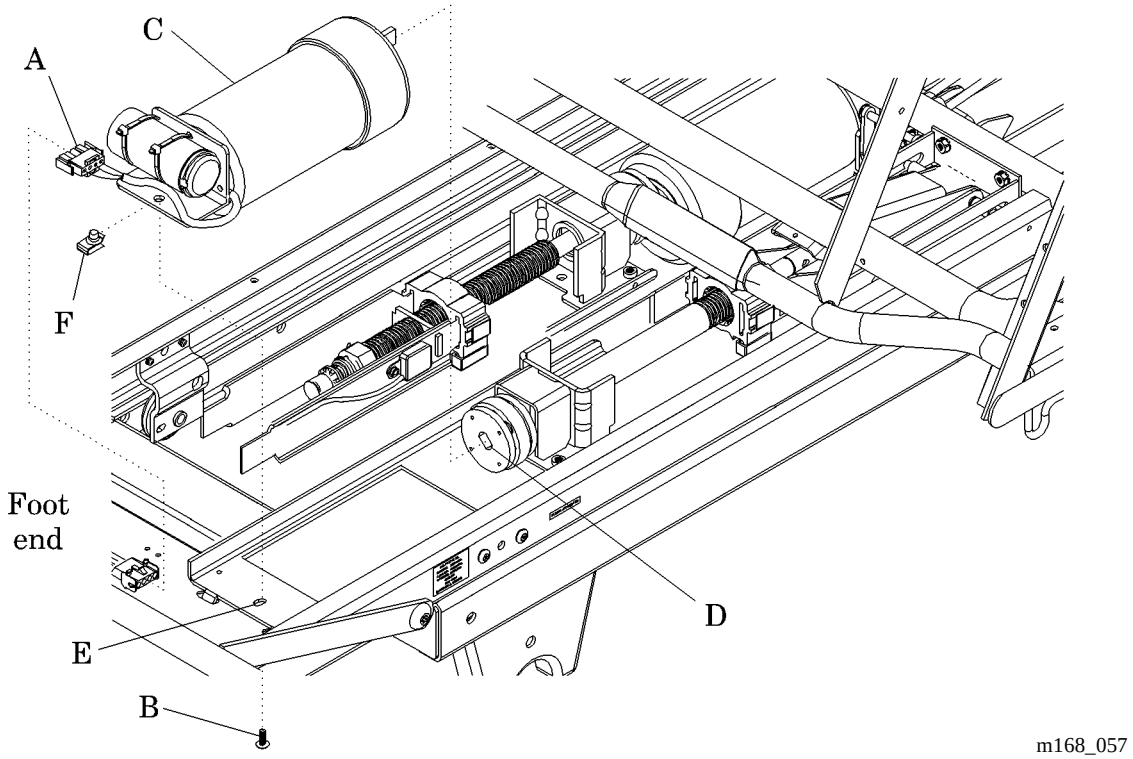

7. Using the T25 Torx®[1] head screwdriver, remove the screw (B) securing the knee motor (C).

8. Be sure to retrieve the clipnut (F), which could come off the motor bracket (G).

9. Carefully support the knee motor (C) with your hands. Slide the knee motor toward the foot end of the bed until the shaft disengages from the drive screw coupling (D).

10. Lift the knee motor (C) out of the bed.

Replacement

1. Install the knee motor (C) in the bed so that the motor shaft engages the drive screw coupling (D), and the holes in the motor bracket (E), clipnut (F), and bed frame are aligned.

1. Torx® is a registered trademark of Textron, Inc.

2. Slide the knee motor (C) towards the head end of the bed until the motor shaft engages fully the drive screw coupling (D).

3. Install the screw (B) through the aligned holes in the bed frame, motor bracket (G), and clipnut (F), and tighten securely.

4. Connect the knee motor power cable (A).

5. Install the foot end cover (see “Foot End Cover” on page 4-9).

6. Plug the bed into an appropriate power source.

7. Test the knee functions of the bed, and ensure it is working properly.

8. To ensure proper operation of the Advanta™ Bed, perform the “Function Checks” on page 2-6.

4.21 Head Drive Screw Assembly

Tools required: T25 Torx®[1] head screwdriver

Removal

1. Remove the head motor assembly from the bed (see “Head Motor” on page 4-47).

SHOCK HAZARD:
Unplug the bed from its power source. Failure to do so could result in personal injury or equipment damage.

2. Remove two screws (A) from the head drive screw assembly (see figure 4-22 on page 4-56).

Figure 4-22. Head Drive Screw Assembly

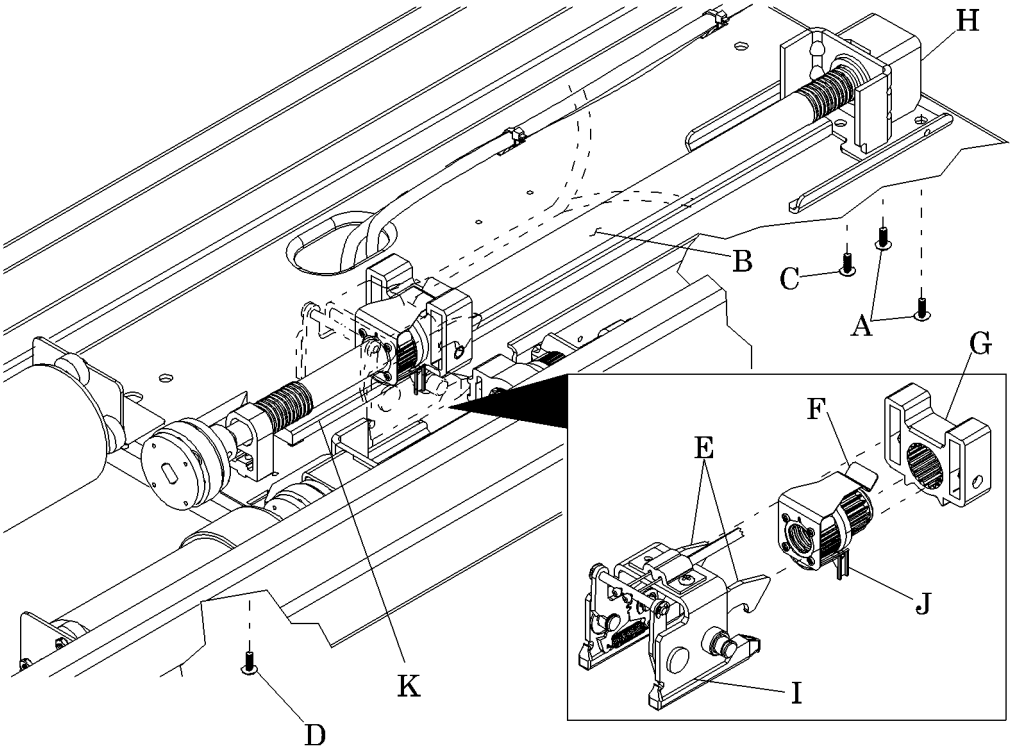

m168_058

3. Loosen screws (C) and (D) approximately 1/8".

1. Torx® is a registered trademark of Textron, Inc.

4. Lift up the two CPR latches (E) and the CPR clip (F) to allow the head torque cage (G) to slide towards the head end of the bed.

5. Slide the head drive screw bracket (H) towards the head end of the bed until the screw (C) can be lifted from the key hole slot.

6. Slide the head drive screw assembly (B) toward the foot end of the bed until the screw (D) can be lifted from the key hole slot.

7. Lift the CPR latch assembly (I) to allow the head drive screw assembly (B) to be removed from the bed.

8. Remove the head drive screw assembly (B).

Replacement

1. Install the head drive screw assembly (B) on the bed so that the screw (D) is inserted in the keyhole slot.

2. Slide the torque cage (G) towards the foot end of the bed so that the screw (C) goes into the keyhole slot.

3. Install the CPR latch assembly (I) on the head drive screw assembly (B).

4. Using the T25 Torx®[1] head screwdriver, secure the head drive screw assembly (B) with the two screws (A).

5. Tighten the screws (C) and (D).

6. Slide the torque cage (G) towards the foot end of the bed so that it engages the CPR latches (E) and CPR clip (F).

7. Install the head motor assembly (see “Head Motor” on page 4-47).

8. Plug the bed into an appropriate power source.

9. Check the head up and head down functions of the bed to ensure that the head drive screw is working properly.

1. Torx® is a registered trademark of Textron, Inc.

CAUTION:
Align the slide switch and the head limit switch after servicing the head drive screw assembly. Ensure that the CPR latch assembly properly actuates the limit switch. Damage to the bed can occur.

10. Align the slide switch (J) with the head limit switch package (K).

11. Ensure that the CPR latch assembly (I) actuates the limit switch (K).

12. To ensure proper operation of the Advanta™ Bed, perform the “Function Checks” on page 2-6.

4.22 Hilow Head Drive Screw Assembly

Tools required: T25 Torx®[1] head screwdriver
Screwdriver
Needle nose pliers
2" x 4" x 30" lumber

Removal

WARNING:
Use a 2 x 4 to support the head end of the bed during this procedure. Failure to do so could cause the head end of the bed to fall, resulting in personal injury or equipment damage.

1. Place a wooden 2 x 4 (A) between the intermediate frame (B) and the head lift arm assembly (C) (see figure 4-23 on page 4-60).

4

1. Torx® is a registered trademark of Textron, Inc.

Figure 4-23. Supporting the Head End of the Bed

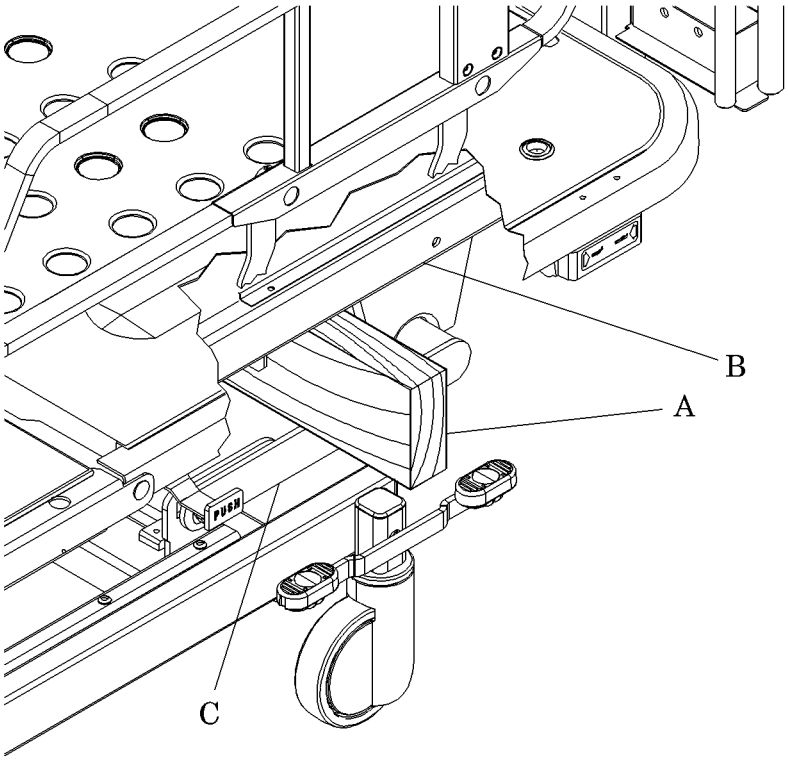

m168_055

NOTE:
Fine adjustment is required when transferring the load from the drive screw to the wood block. If the bed is unloaded too far, the hilow remote switch trips and the bed automatically rises for three seconds. When the intermediate frame nears the wood block on these beds, bump the *hilow down* switch until contact is made and the head end of the bed is supported.

2. Using the hilow function, lower the bed onto the 2 x 4 to support the head end of the bed.

3. Remove the head motor assembly (see “Head Motor” on page 4-47).

4. Remove the hilow head motor assembly (see “Hilow Head Motor” on page 4-49).

5. Using the screwdriver if necessary, remove the two spring clips (D) from the torque cage (E) (see figure 4-24 on page 4-61).

Figure 4-24. Hilow Head Drive Screw Assembly

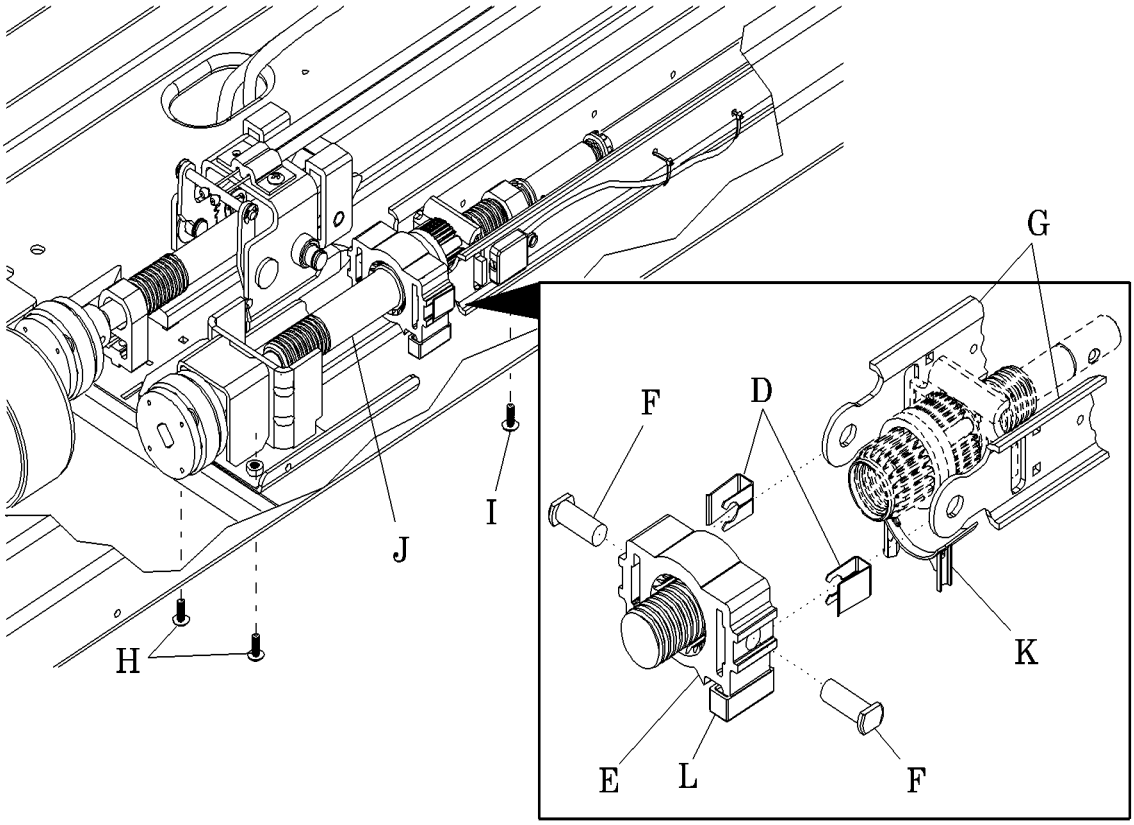

m168_054

6. Using the needle nose pliers if necessary, remove the two pins (F) from the torque cage (E).

7. Remove the two hilow straps (G) from the torque cage (E).

8. Using the T25 Torx®[1] head screwdriver, remove the two screws (H) from the hilow head drive screw assembly (J).

9. Loosen the screw (I) approximately 1/8".

10. Slide the hilow head drive screw assembly (J) towards the foot end of the bed until the screw (I) can be lifted through the keyhole slot.

1. Torx® is a registered trademark of Textron, Inc.

11. Remove the hilow head drive screw assembly (J) from the bed.

Replacement

1. Install the hilow head drive screw assembly (J) on the bed, making sure that the screw (I) goes into the keyhole slot.
2. Slide the hilow head drive screw assembly (J) towards the head end of the bed so the screw (I) is in the narrow end of the keyhole slot.
3. Using the T25 Torx®[1] head screwdriver, tighten the screw (I).
4. Install the two screws (H), and tighten securely.
5. Insert the hilow straps (G) into the slots on the torque cage (E), and secure them with the two pins (F).
6. Secure the pins (F) by installing the spring clips (D) on the torque cage (E).
7. Install the hilow head motor assembly (see “Hilow Head Motor” on page 4-49).
8. Install the head motor assembly (see “Head Motor” on page 4-47).

CAUTION:
Failure to align the slide switch and the drive screw when installing the hilow head drive screw can cause severe damage to the bed.

9. Align the slide switch (K) and the drive boots (L), which are fastened to the torque cage (E).
10. Plug the bed into an appropriate power source.
11. Test the *bed up* and *bed down* functions on the bed, and ensure that the bed is working properly.
12. To ensure proper operation of the Advanta™ Bed, perform the “Function Checks” on page 2-6.

1. Torx® is a registered trademark of Textron, Inc.

4.23 Head Limit Switch

Tools required: T25 Torx®[1] head screwdriver
2" x 4" x 30" lumber

Removal

1. Remove the head motor assembly (see “Head Motor” on page 4-47).

2. Using the T25 Torx® head screwdriver, remove the three screws (A) from the head limit switch housing (B) (see figure 4-25 on page 4-63).

Figure 4-25. Head Limit Switch

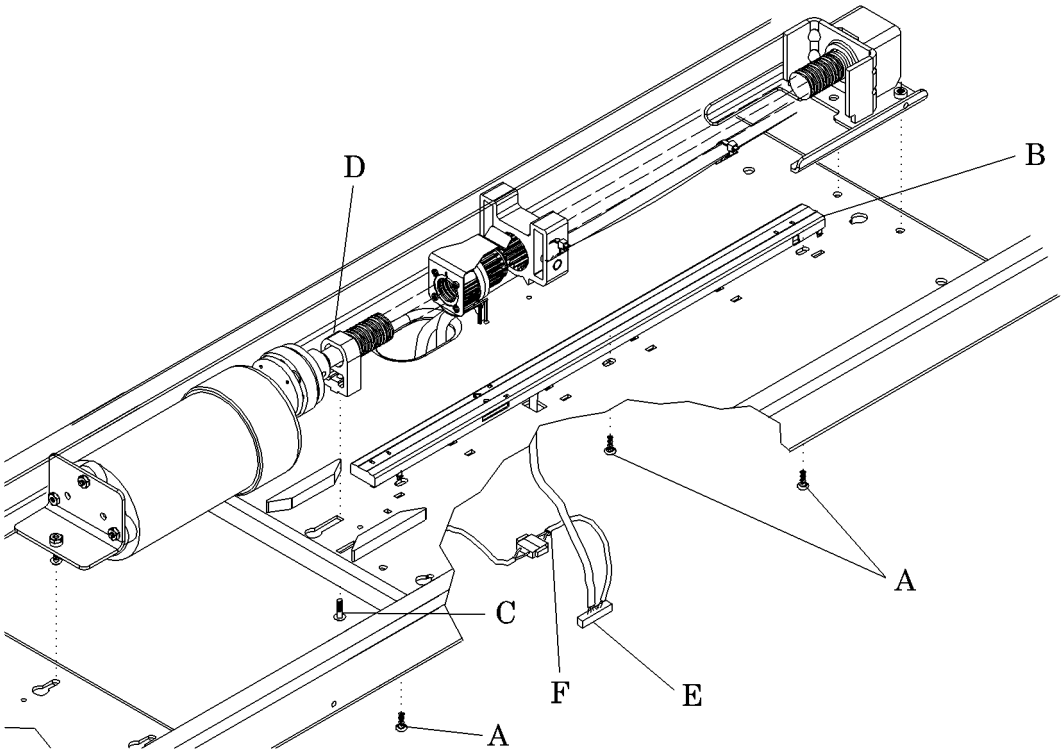

m068_062

3. Disconnect the limit switch cable connector (E) from the connector board under the air system weld assembly.

4. Remove the screw (C) from the radial bracket (D).

5. Locate and disconnect the cable (F) coming from the CPR switch to the limit switch cable connector (E).

1. Torx® is a registered trademark of Textron, Inc.

6. Lift the two CPR latches (G) and the CPR clip (H) to allow the head torque cage (I) to slide toward the head end of the bed (see figure 4-26 on page 4-64).

Figure 4-26. CPR Latches and Clip

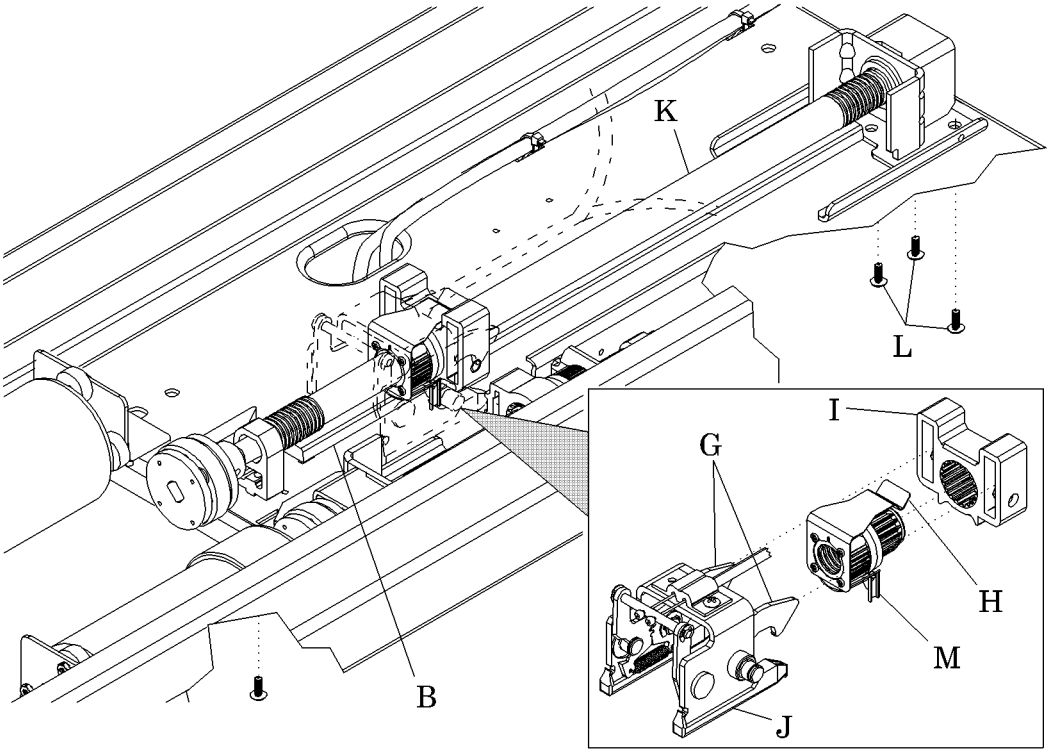

m168_063

WARNING:
Use a 2 x 4 to support the head end of the bed during this procedure. Failure to do so could cause the head end of the bed to fall, resulting in personal injury or equipment damage.

7. Raise the head section, and prop it up in the high position with a 2 x 4.

8. If necessary, remove the screws (L).

9. Lift the CPR latch housing assembly (J) and head drive screw assembly (K).

10. Slide out the head limit switch housing (B).

Replacement

1. If necessary, remove the screws (L) and lift the head drive screw assembly (K).

CAUTION:
Do not over-tighten the limit switch mounting screws. Over-tightening the mounting screws could cause the limit switch to malfunction.

2. Install the head limit switch housing (B), and slide it as far as it will go towards the foot end of the bed.

3. Install the screws (A), but do not tighten fully (see figure 4-25 on page 4-63).

4. Install the head drive screw assembly (K), and secure it with the screws (L) (see figure 4-26 on page 4-64).

CAUTION:
Align the slide switch and the head limit switch after installing the limit switch assembly. Failure to ensure that the CPR latch assembly properly actuates the limit switch could result in equipment damage.

5. Align the slide switch (M) with the head limit switch assembly (B), so that the slide switch (M) will engage the switch.

NOTE:
For proper alignment, the switch marked in red on the limit slide assembly should be pointing towards the slide switch.

6. Adjust the head limit switch (see “Adjustment” on page 4-66).

7. Assemble the remaining parts in reverse order.

Adjustment

1. Check your limit switch configuration by comparing it to figure 4-27 on page 4-66.

Figure 4-27. Limit Switch Configurations

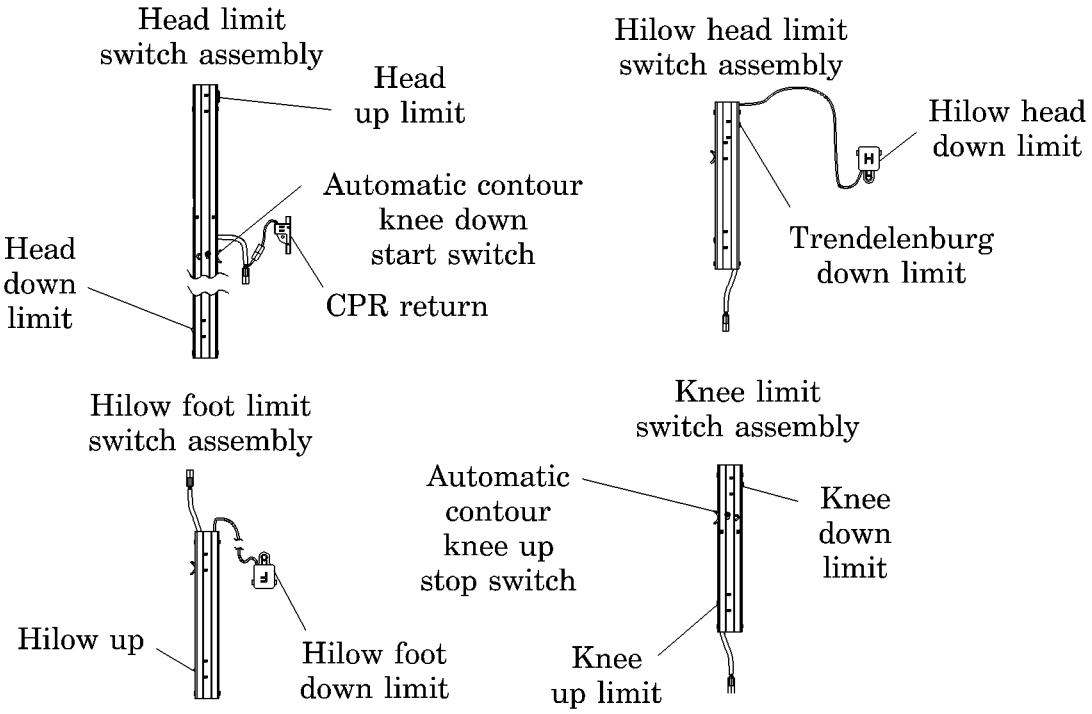

In addition to the limit switches shown, a mercury switch on the logic board is used for Trendelenburg and Reverse Trendelenburg limit. Beds equipped with the optional air mattress also have an *Auto inflate/CPR switch* mounted on the CPR head release.

m168_059

2. Adjust the limit switch package (N) as far toward the foot end of the bed as the tab can go in the slot (see figure 4-28 on page 4-67).

NOTE:
The lower left hand tab will be centered in its slot.

Figure 4-28. Head Limit Switch Assembly Tab and Slot Orientation

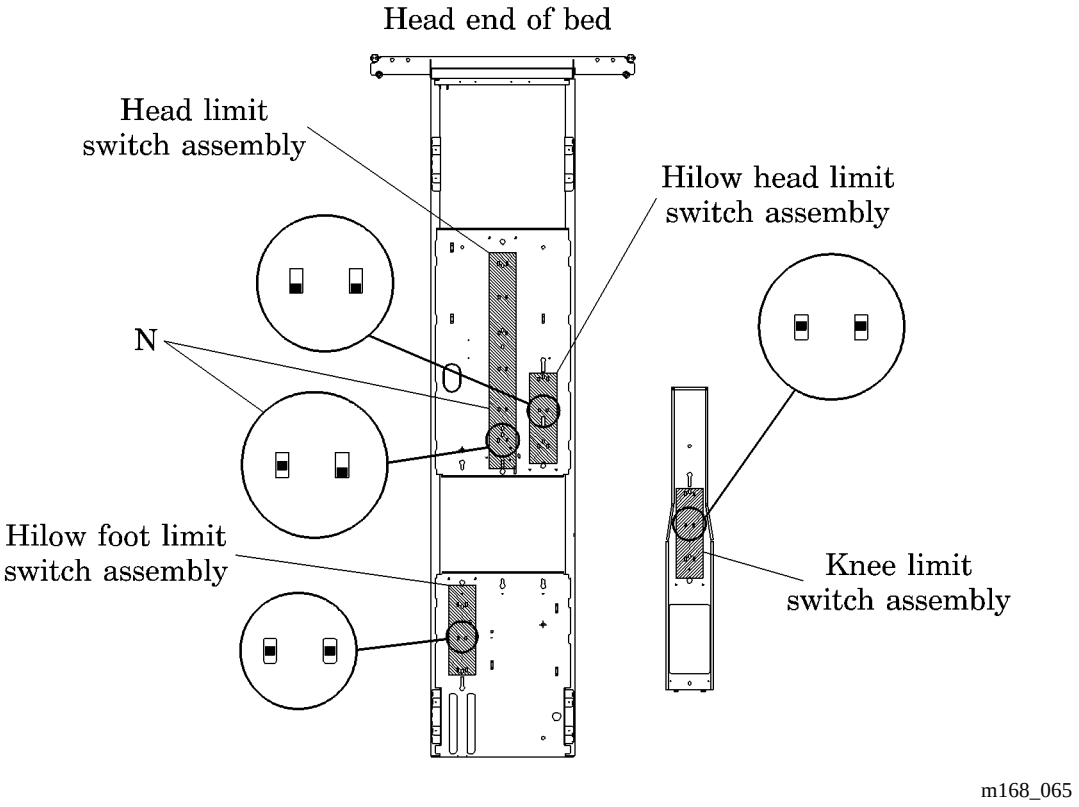

CAUTION:
Do not over-tighten the limit switch mounting screws. Over-tightening the mounting screws can cause the limit switch to malfunction.

3. Tighten the limit switch mounting screws (A).

4. To ensure proper operation of the Advanta™ Bed, perform the “Function Checks” on page 2-6.

4

4.24 Hilow Head Limit Switch

Tools required: T25 Torx®[1] head screwdriver
Small wire cutters
2" x 4" x 30" lumber

Removal

WARNING:
Use a 2 x 4 to support the head end of the bed during this procedure. Failure to do so could cause the head end of the bed to fall, resulting in personal injury or equipment damage.

1. Place a wooden 2 x 4 (A) between the intermediate frame (B) and the head lift arm assembly (C) (see figure 4-29 on page 4-69).

1. Torx® is a registered trademark of Textron, Inc.

Figure 4-29. Supporting the Head End of the Bed

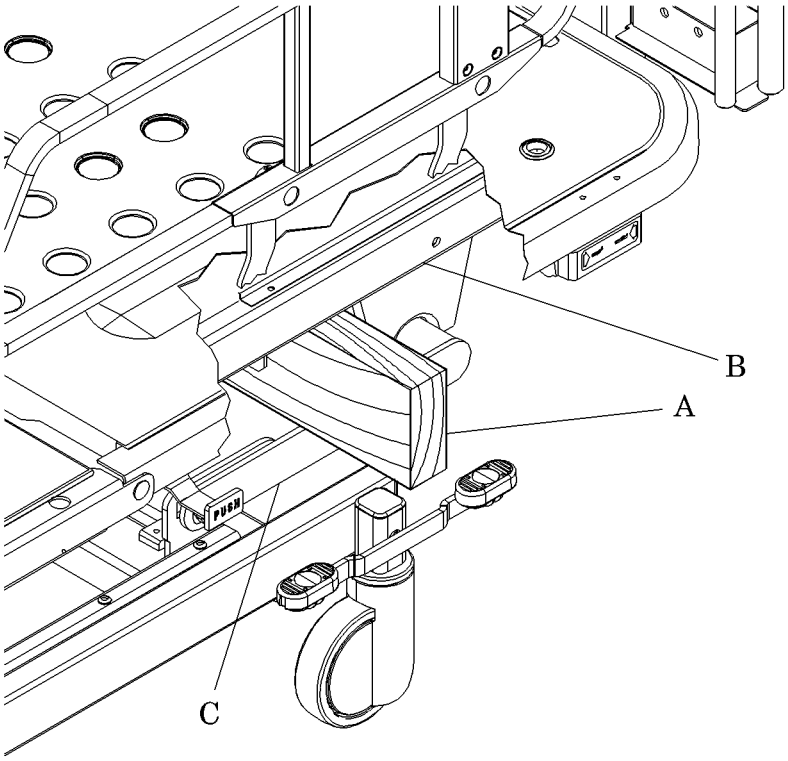

m168_055

NOTE:
Fine adjustment is required when transferring the load from the drive screw to the wood block. If the bed is unloaded too far, the hilow remote switch trips and the bed automatically rises for three seconds. When the intermediate frame nears the wood block on these beds, bump the *hilow down* switch until contact is made and the head end of the bed is supported.

2. Using the hilow function, lower the bed onto the 2 x 4 to support the head end of the bed.

3. Raise the head section to 25° elevation.

SHOCK HAZARD:
Unplug the bed from its power source. Failure to do so could result in personal injury or equipment damage.

4. Unplug the bed from its power source.

5. Remove the motor cover (see “Motor Cover Assembly” on page 4-40).

6. Using the T25 Torx®[1] head screwdriver, remove the two screws (D) from the hilow limit switch housing (E) (see figure 4-30 on page 4-70).

Figure 4-30. Hilow Head Limit Switch

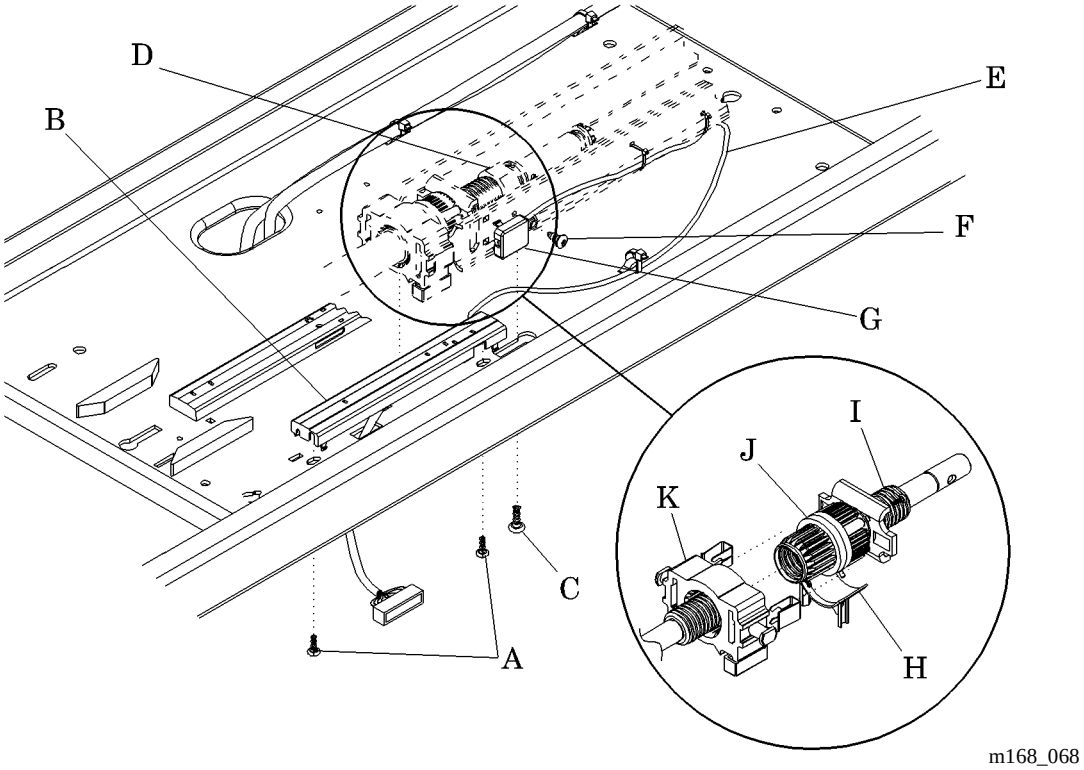

7. Remove the screw (F) from the radial bracket (G).

8. Disconnect the cable connector (H) from the connector board under the air system weld assembly.

9. Note the routing of the cable (H) for the hilow head limit switch assembly.

1. Torx® is a registered trademark of Textron, Inc.

NOTE:
The cable must be installed in the same manner.

10. Using the small wire cutters, cut the cable ties securing the cable (E).

11. Using the T25 Torx®[1] head screwdriver, remove the screw (I), and separate the limit switch (J) from the hilow strap (O).

12. Lift the radial bracket (G) and the end of the hilow head drive screw assembly.

13. Slide out the hilow head limit switch assembly.

Replacement

1. Lift up the hilow head drive screw assembly and install the hilow head limit switch housing (E).

2. Using the T25 Torx® head screwdriver, secure the limit switch (J) to the hilow strap (O) with the screw (I).

3. Route the cable (H) along the hilow strap (O) and secure it with cable ties.

4. Connect the cable (H) at the junction board.

CAUTION:
Do not over-tighten the limit switch mounting screws. Over-tightening the mounting screws can cause the limit switch to malfunction.

5. Fasten the hilow limit switch housing (E) to the bed frame with the two screws (D).

6. Secure the radial bracket (G) with the screw (F).

7. Assemble the hilow head limit switch assembly in the reverse order of removal.

4

1. Torx® is a registered trademark of Textron, Inc.

CAUTION:
Failure to align the slide switch and the drive screw when installing the hilow head limit switch can cause severe damage to the bed.

8. Align the slide switch (K) and the drive screw (L) which are fastened to the lift nut (M) and torque cage (N).

9. To ensure proper operation of the Advanta™ Bed, perform the “Function Checks” on page 2-6.

4.25 Knee Drive Screw Assembly

Tools required: T25 Torx®[1] head screwdriver
Screwdriver

Removal

1. Using the *knee up*/*knee down* controls, position the knee section halfway between its lowest and highest positions.

2. Using the hilow function, raise the bed to its highest position.

3. Remove the foot end cover (see “Foot End Cover” on page 4-9).

SHOCK HAZARD:
Unplug the bed from its power source. Failure to do so could result in personal injury or equipment damage.

4. Unplug the bed from its power source.

5. Remove the motor cover (see “Motor Cover Assembly” on page 4-40).

6. Remove the knee motor assembly (see “Knee Motor” on page 4-53).

7. Using the T25 Torx® head screwdriver, loosen the screw beneath the radial bracket (A) approximately 1/8" (see figure 4-31 on page 4-74).

4

1. Torx® is a registered trademark of Textron, Inc.

Figure 4-31. Knee Drive Screw Assembly

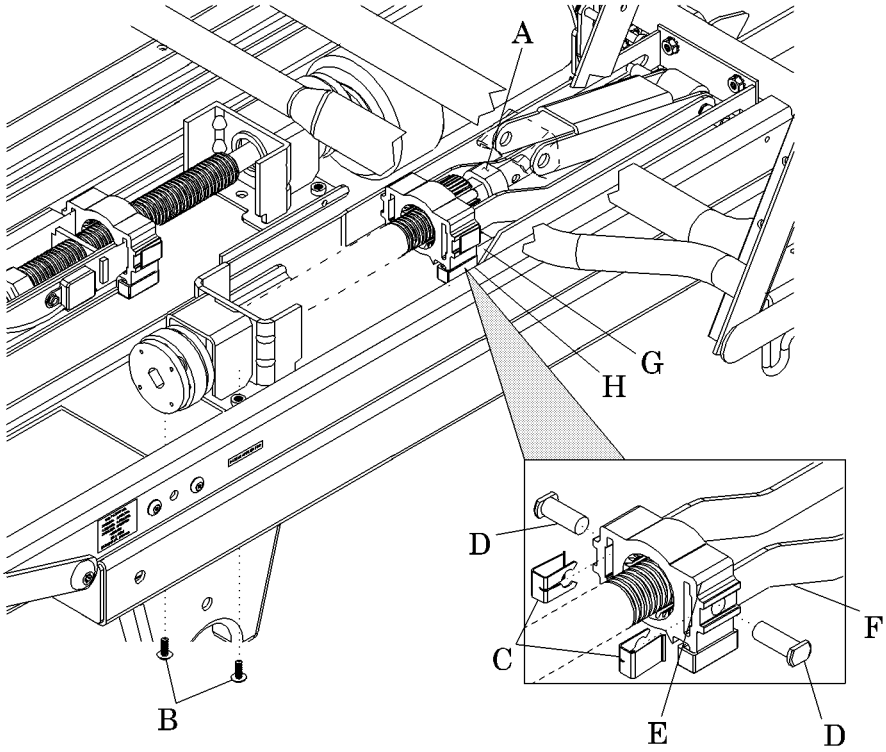

m168_061

8. Remove the two screws (B).
9. Remove the two spring clips (C) and pins (D) from the torque cage (E).
10. Using a screwdriver if necessary, remove the torque cage (E) from the knee links (F).
11. Slide the knee drive screw assembly toward the head end of the bed until the screw in the radial bracket (A) can be removed from the key hole slot.
12. Remove the knee drive screw assembly.

Replacement

1. Install the knee drive screw assembly in the bed, inserting the screw on the radial bracket (A) into the keyhole slot.
2. Insert the knee links (F) into the slots on the torque cage (E), and secure them with the pins (D) and spring clips (C).

3. Using the T25 Torx®[1] head screwdriver, install the two screws (B) and tighten securely.

4. Install the knee motor assembly (see “Knee Motor” on page 4-53).

5. Install the motor cover (see “Motor Cover Assembly” on page 4-40).

6. Install the foot end cover (see “Foot End Cover” on page 4-9).

7. Plug the bed into an appropriate power source.

8. Using the *knee up*/*knee down* controls, test the bed to ensure it is working properly.

CAUTION:
Failure to align the slide switch and drive screw when installing the knee drive screw assembly can cause severe damage to the bed.

9. Align the limit slide switch (G) and the drive screw (H) which are fastened to the lift nut and torque cage (E).

10. To ensure proper operation of the Advanta™ Bed, perform the “Function Checks” on page 2-6.

1. Torx® is a registered trademark of Textron, Inc.

4.26 Knee Limit Switch

Tools required: T25 Torx®[1] head screwdriver
Small wire cutters

Removal

1. Raise the head section to 55°.
2. Remove the head motor (see “Head Motor” on page 4-47).
3. Remove the hilow head motor (see “Hilow Head Motor” on page 4-49).
4. Using the T25 Torx® head screwdriver, remove the screw from beneath the radial bracket (A) (see figure 4-32 on page 4-76).

Figure 4-32. Knee Limit Switch

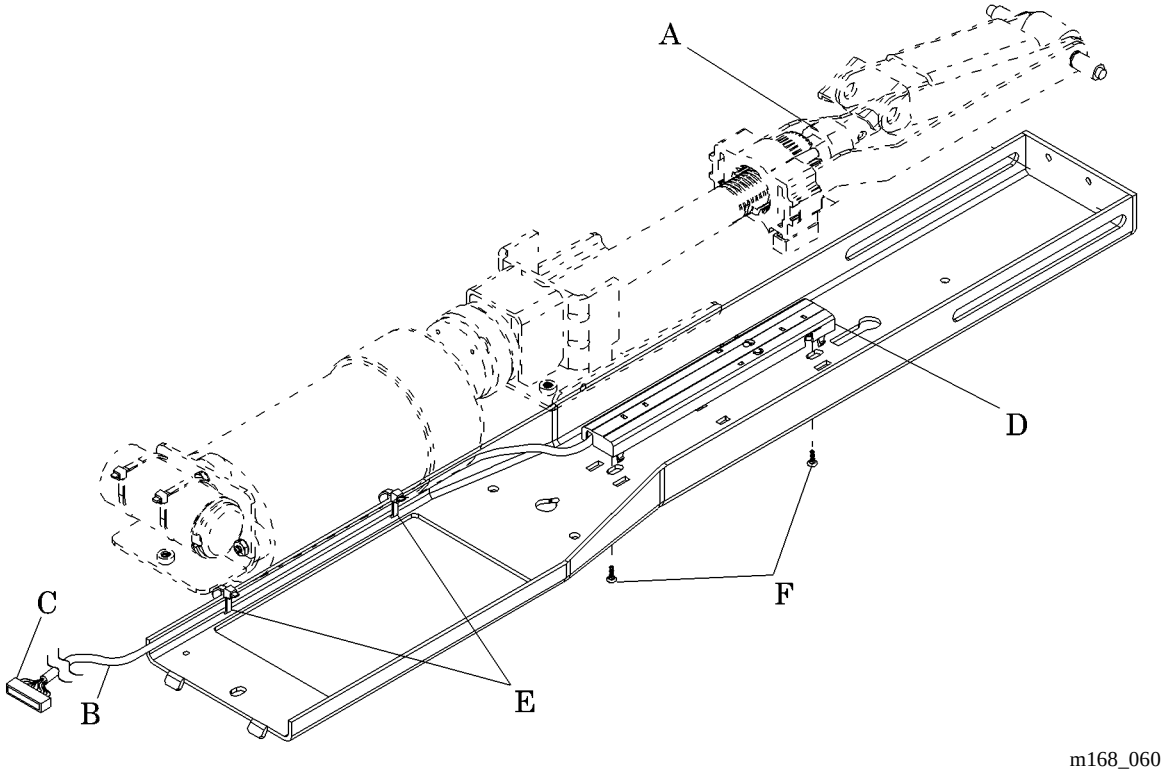

5. Disconnect the cable (B) at the connector (C) on the logic board.
6. Note the routing of the cable (B) for the knee limit switch housing (D).

1. Torx® is a registered trademark of Textron, Inc.

7. Using the small wire cutters, remove the cable ties (E) from the cable (B).

8. Lift up the radial bracket (A) and the end of the knee drive screw assembly, and slide out the limit switch assembly (D).

Replacement

1. Lift up the radial bracket (A) and the end of the knee drive screw assembly, and install the limit switch assembly (D).

CAUTION:
Do not over-tighten the limit switch mounting screws. Over-tightening the mounting screws could cause the limit switches to malfunction.

2. Install the two screws (F) in the limit switch assembly (D), but do not tighten.

NOTE:
The screws are tightened during adjustment.

3. Adjust the knee limit switch assembly (see “Adjustment” on page 4-78).

4. Route the cable (B) along the side of the knee channel, and secure it with cable ties (E).

5. Connect the cable (B) at the connector (C).

6. Install the screw in the radial bracket (A), and tighten securely.

7. Install the hilow head motor (see “Hilow Head Motor” on page 4-49).

8. Install the head motor (see “Head Motor” on page 4-47).

9. Plug the bed into an appropriate power source.

10. Using the *knee up*/*knee down* controls, raise and lower the knee section fully, and ensure the knee limit switch is working properly.

Adjustment

CAUTION:
Failure to align the limit slide switch, automatic contour switch, and drive boots when installing the knee drive screw assembly can cause severe damage to the bed.

1. Adjust the knee limit switch assembly so that the tabs (G) are centered in the slots (see figure 4-33 on page 4-78).

Figure 4-33. Limit Switch Package Tab and Slot Orientation

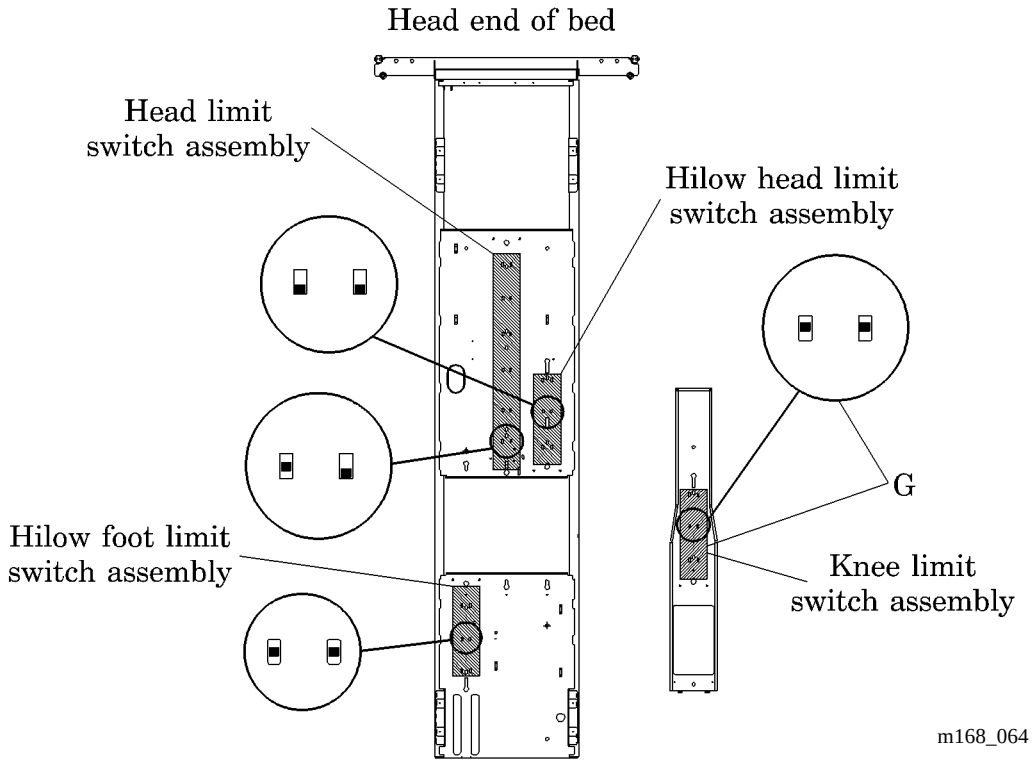

CAUTION:
Do not over-tighten the limit switch mounting screws. Over-tightening the mounting screws could cause the limit switches to malfunction.

2. Tighten the limit switch mounting screws (F) (see figure 4-32 on page 4-76).

3. To ensure proper operation of the Advanta™ Bed, perform the “Function Checks” on page 2-6.

4.27 CPR Release Handle

Tools required: 1/2" open end wrenches (2)

Adjustment

1. Remove the head end covers (see “Head End Covers” on page 4-13).

2. Using the 1/2" open end wrenches, loosen both jam nuts (A) and (B) on the back side of the CPR release handle (see figure 4-34 on page 4-79).

Figure 4-34. CPR Release Handle

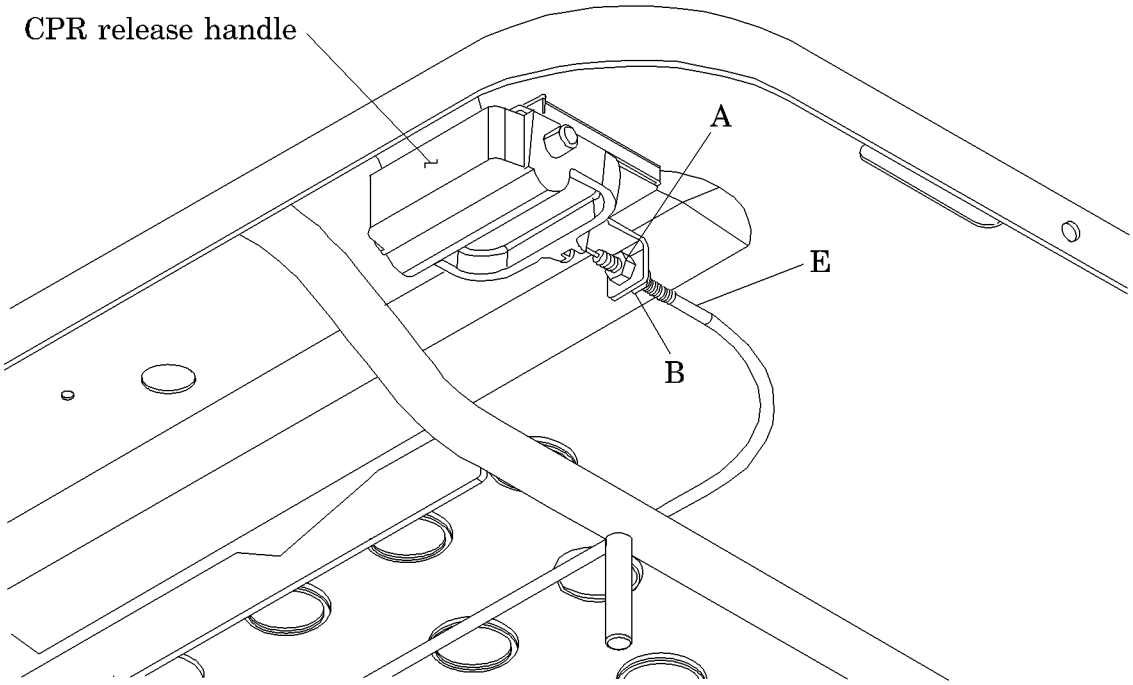

m168_067

3. Locate the cable ball stops (C) as they pass through the latch release bar (D) on the CPR release mechanism (see figure 4-35 on page 4-80).

Figure 4-35. CPR Release Handle Adjustment

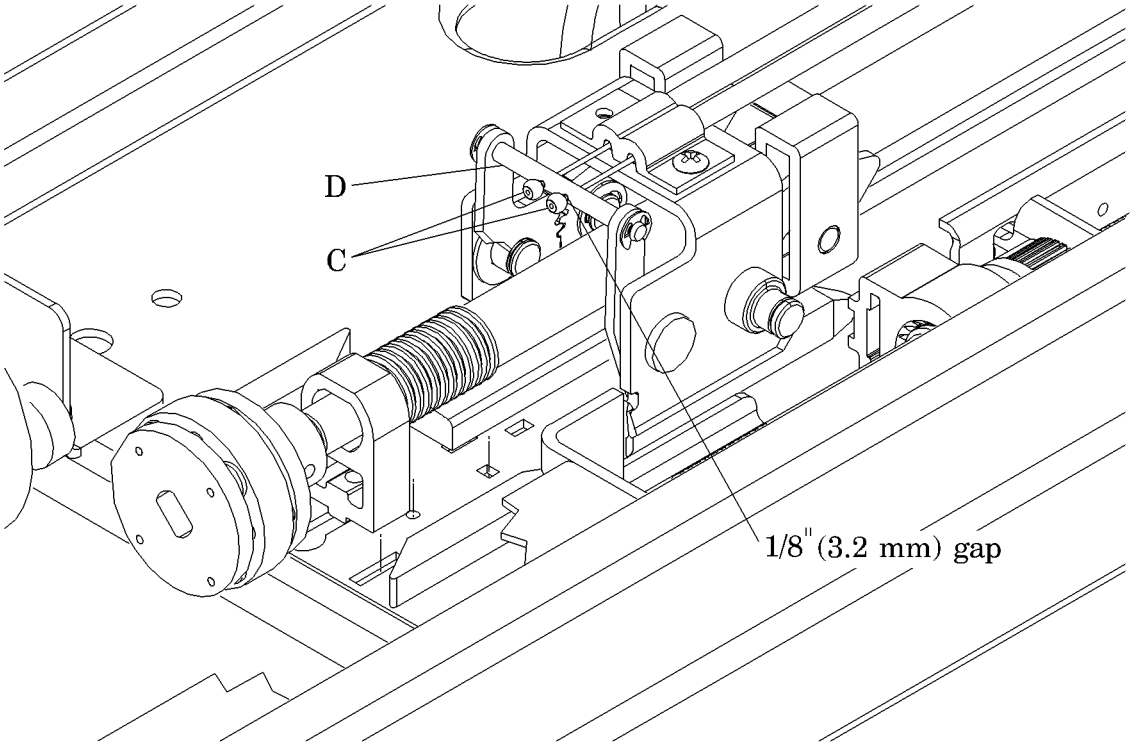

m168_066

4. Adjust the threaded end of the CPR cable (E) on the CPR release handle (see figure 4-34 on page 4-79).

5. Establish a 1/8" (3.2 mm) gap between the cable ball stops (C) and the latch release bar (D) (see figure 4-35 on page 4-80).

6. Tighten the jam nuts (A) and (B) on the CPR release handle (see figure 4-34 on page 4-79).

7. Activate the CPR release handle(s) to ensure that the cable adjustments are correct.

8. To ensure proper operation of the Advanta™ Bed, perform the “Function Checks” on page 2-6.

4.28 CPR Limit Switch

Tools required: T25 Torx®[1] head screwdriver
Extraction tool (P/N 428356)

Removal

1. Remove the motor cover (see “Motor Cover Assembly” on page 4-40).

SHOCK HAZARD:
Unplug the bed from its power source. Failure to do so could result in personal injury or equipment damage.

2. Unplug the bed from its power source.

3. Disconnect the cable connector (A) (see figure 4-36 on page 4-81).

Figure 4-36. CPR Limit Switch

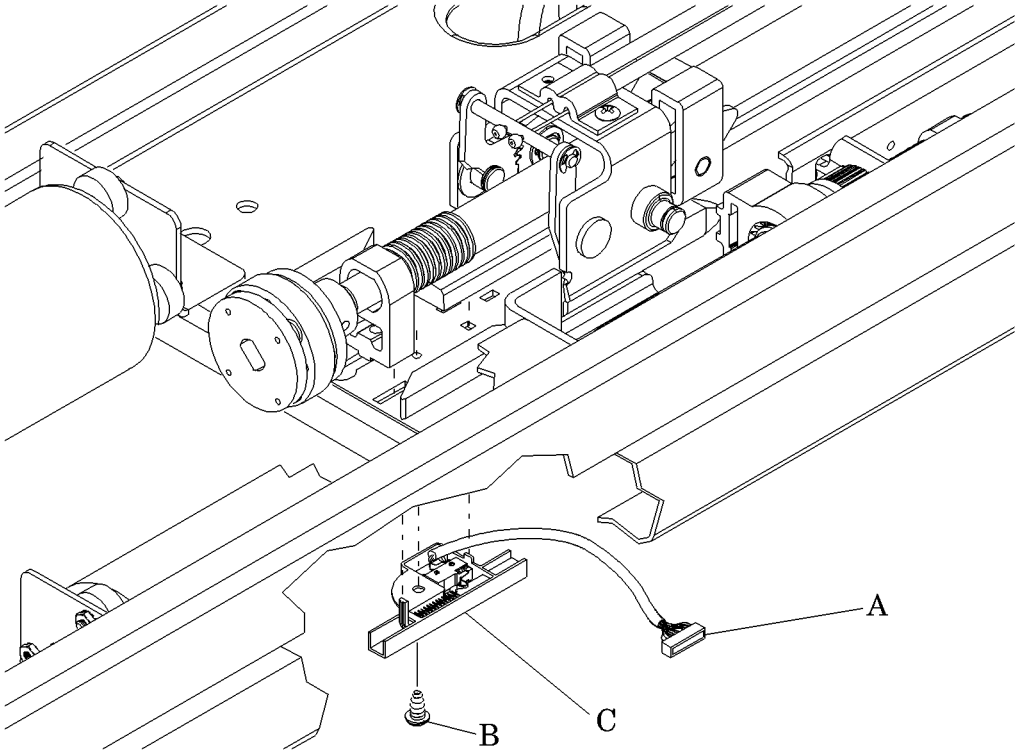

m168_074

1. Torx® is a registered trademark of Textron, Inc.

4. Using the T25 Torx®[1] head screwdriver, remove the screw (B) from the CPR limit switch (C).

Replacement

1. Using the T25 Torx® head screwdriver, secure the CPR limit switch (C) with the screw (B).
2. Connect the CPR limit switch (C) at the cable connector (A).
3. Install the motor cover (see “Motor Cover Assembly” on page 4-40).
4. Plug the bed into an appropriate power source.
5. To ensure proper operation of the Advanta™ Bed, perform the “Function Checks” on page 2-6.

1. Torx® is a registered trademark of Textron, Inc.

4.29 Hilow Foot Drive Screw Assembly

Tools required: T25 Torx®[1] head screwdriver
Small wire cutters
Screwdriver
2" x 4" x 30" lumber

Removal

WARNING:
Use a 2 x 4 to support the foot end of the bed during this procedure. Failure to do so could cause the foot end of the bed to fall, resulting in personal injury or equipment damage.

1. Place a 2 x 4 (A) between the intermediate frame (B) and the foot lift arm assembly (C) (see figure 4-37 on page 4-83).

Figure 4-37. Supporting the Foot End of the Bed

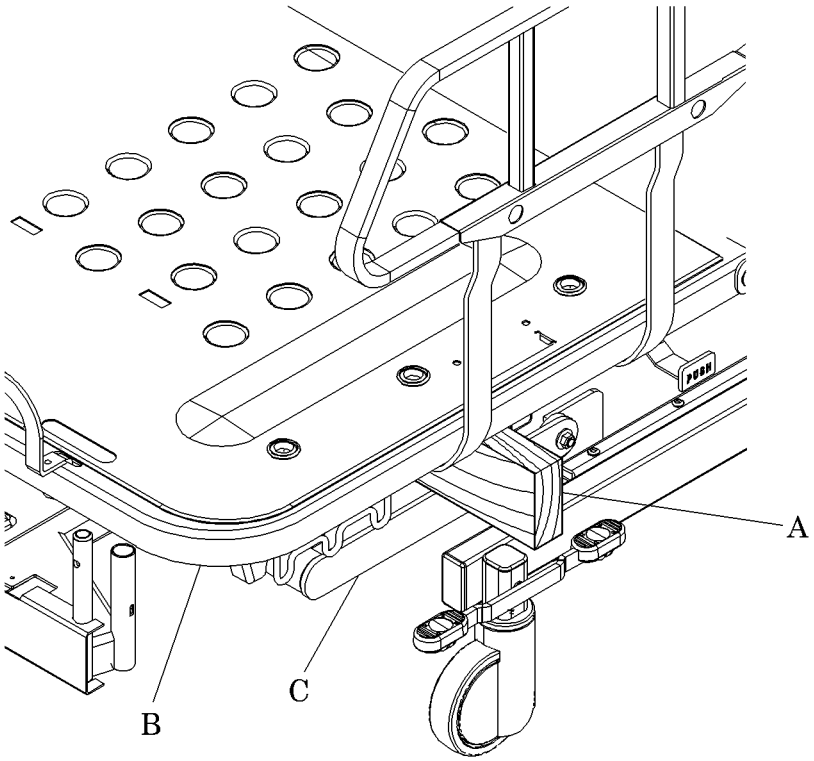

m168_073

1. Torx® is a registered trademark of Textron, Inc.

NOTE:
Fine adjustment is required when transferring the load from the drive screw to the wood block. If the bed is unloaded too far, the hilow remote switch trips and the bed automatically rises for three seconds. When the intermediate frame nears the wood block on these beds, bump the *hilow down* switch until contact is made and the head end of the bed is supported.

2. Using the *bed up*/*bed down* controls, lower the bed onto the 2 x 4 (A) to support the foot end of the bed.

3. Remove the hilow foot motor assembly (see “Hilow Foot Motor” on page 4-51).

SHOCK HAZARD:
Unplug the bed from its power source. Failure to do so could result in personal injury or equipment damage.

4. Unplug the bed from its power source.

5. Remove the foot end cover (see “Foot End Cover” on page 4-9).

6. Remove the seat section cover (see “Air Control Cover” on page 4-15).

7. Using the T25 Torx®[1] head screwdriver, remove the screw (D) and nut (E) that secure the circuit board pan (F) (see figure 4-38 on page 4-85).

1. Torx® is a registered trademark of Textron, Inc.

Figure 4-38. Circuit Board Pan

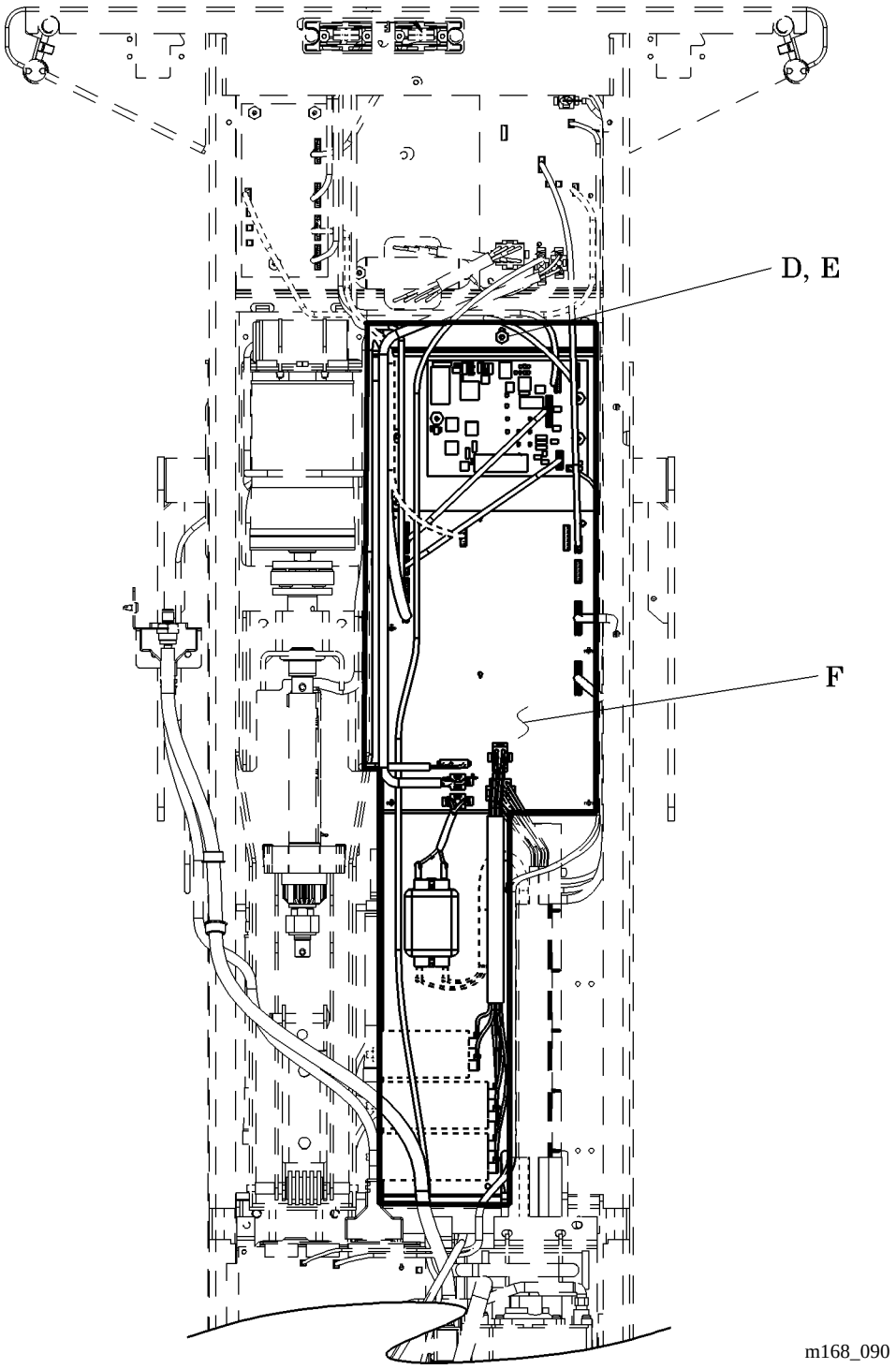

8. Using the small wire cutters, cut the cable ties (G) that secure the wires coming from the circuit board pan (F), the retracting frame (H), and knee motor assembly.

9. Disconnect all the wire connectors from the P.C. boards in the circuit board pan (F).

10. Remove the circuit board pan (F) and set aside.

11. Using the T25 Torx®[1] head screwdriver, loosen screws (H) and (I) approximately 1/8" (see figure 4-39 on page 4-86).

Figure 4-39. Hilow Foot Drive Screw Assembly

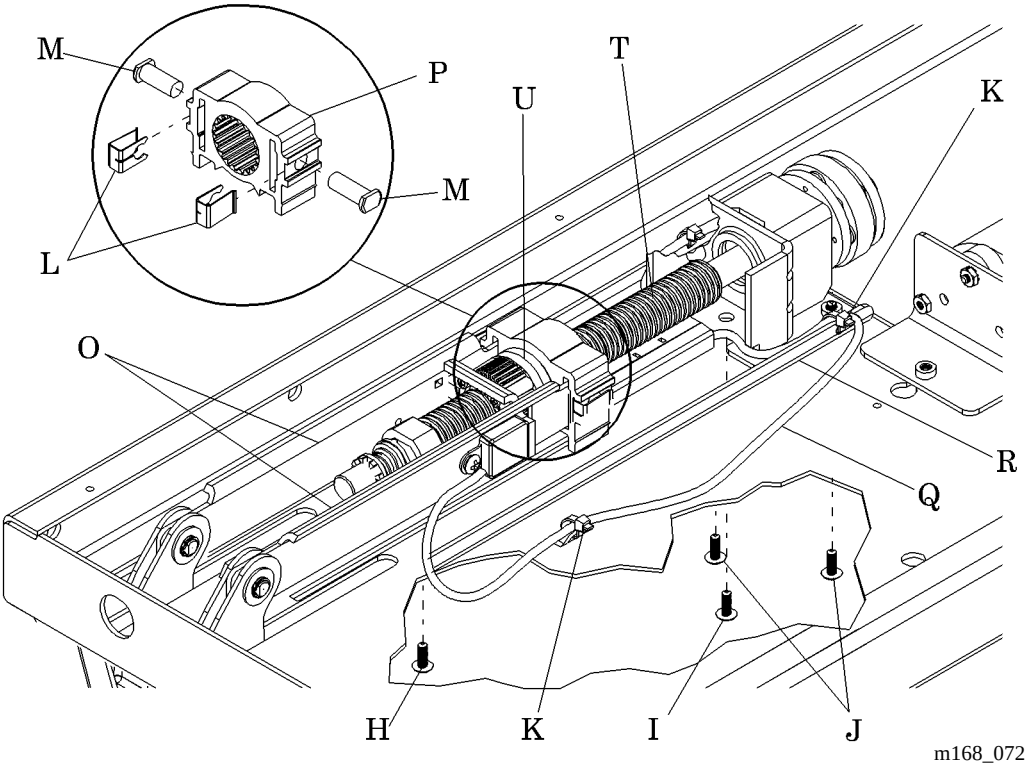

12. Using the T25 Torx® head screwdriver, remove the two screws (J) on the hilow foot drive screw assembly.

13. Using the small wire cutters, cut the two cable ties (K) connecting the limit switch cable (Q) to the thrust bracket (R).

14. Using the screwdriver if necessary, remove the two clips (L) and pins (M).

1. Torx® is a registered trademark of Textron, Inc.

15. Using the screwdriver if necessary, remove the hilow straps (O) from the torque cage (P).

16. Slide the hilow foot drive screw assembly toward the head end of the bed until the screw (I) can be lifted from the keyhole slot.

17. Slide the assembly toward the foot end of the bed until the screw (H) can be lifted from the keyhole slot, and remove the hilow foot drive screw assembly from the bed.

Replacement

1. Install the hilow foot drive screw assembly on the bed so that the screw (H) is inserted into the keyhole slot.

2. Slide the assembly toward the head end of the bed so that the screw (I) is inserted into the keyhole slot.

3. Insert the hilow straps (O) into the slots on the torque cage (P), and secure them with the pins (M) and clips (L).

4. Install the screws (J) and tighten securely.

CAUTION:
Failure to align the slide switch and the drive screw when installing the hilow foot drive screw can cause severe damage to the bed.

5. Align the limit slide switch (S) and the drive screw (T) that are fastened to the lift nut (U) and torque cage (P).

6. Verify that the hilow foot limit switch is correctly adjusted (see “Hilow Foot Limit Switch” on page 4-89).

7. Tighten the screws (H) and (I).

8. Secure the limit switch cable (Q) to the thrust bracket (R) with cable ties.

9. Install the circuit board pan (F), and secure it with the screw (D) and nut (E) (see figure 4-38 on page 4-85).

10. Connect the wire connectors to the circuit board pan (F).

11. Secure the wires from the circuit board pan (F) with cable ties (G).

12. Install the seat section cover (see “Air Control Cover” on page 4-15).
13. Install the foot end cover (see “Foot End Cover” on page 4-9).
14. Plug the bed into an appropriate power source.
15. Remove the wood 2 x 4 from the bed
16. Using the *bed up*/*bed down* controls, test the hilow functions.
17. To ensure proper operation of the Advanta™ Bed, perform the “Function Checks” on page 2-6.

4.30 Hilow Foot Limit Switch

Tools required: T25 Torx®[1] head screwdriver
Small wire cutters
Screwdriver
2" x 4" x 30" lumber

Removal

WARNING:
Use a 2 x 4 to support the foot end of the bed when removing the hilow foot drive assembly. The foot end of the bed will fall during this procedure if it is not supported. Personal injury or equipment damage could occur.

1. Place a 2 x 4 (A) between the intermediate frame (B) and the foot lift arm assembly (C) (see figure 4-40 on page 4-89).

Figure 4-40. Supporting the Foot End of the Bed

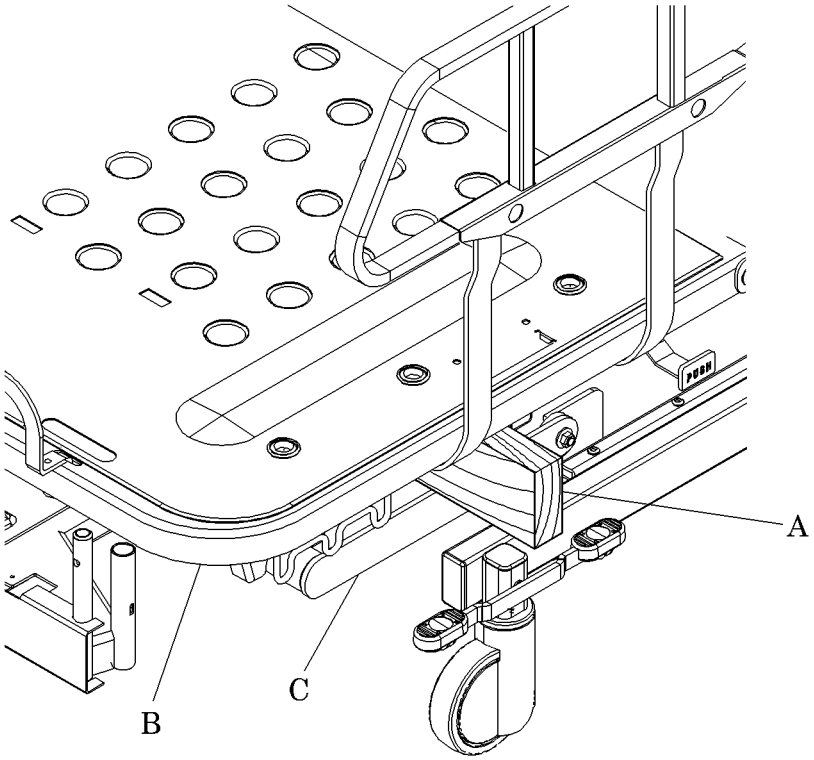

m168_073

1. Torx® is a registered trademark of Textron, Inc.

NOTE:
Fine adjustment is required when transferring the load from the drive screw to the wood block. If the bed is unloaded too far, the hilow remote switch trips and the bed automatically rises for three seconds. When the intermediate frame nears the wood block on these beds, bump the *hilow down* switch until contact is made and the head end of the bed is supported.

2. Using the *bed up*/*bed down* controls, lower the bed onto the 2 x 4 (A) to support the foot end of the bed.

SHOCK HAZARD:
Unplug the bed from its power source. Failure to do so could result in personal injury or equipment damage.

3. Unplug the bed from its power source.

4. Remove the hilow foot motor assembly (see “Hilow Foot Motor” on page 4-51).

5. Remove the foot end cover (see “Foot End Cover” on page 4-9).

6. Remove the seat section cover (see “Air Control Cover” on page 4-15).

7. Using the T25 Torx®[1] head screwdriver, remove the screw (D) and nut (E) that secure the circuit board pan (F) (see figure 4-41 on page 4-91).

1. Torx® is a registered trademark of Textron, Inc.

Figure 4-41. Circuit Board Pan

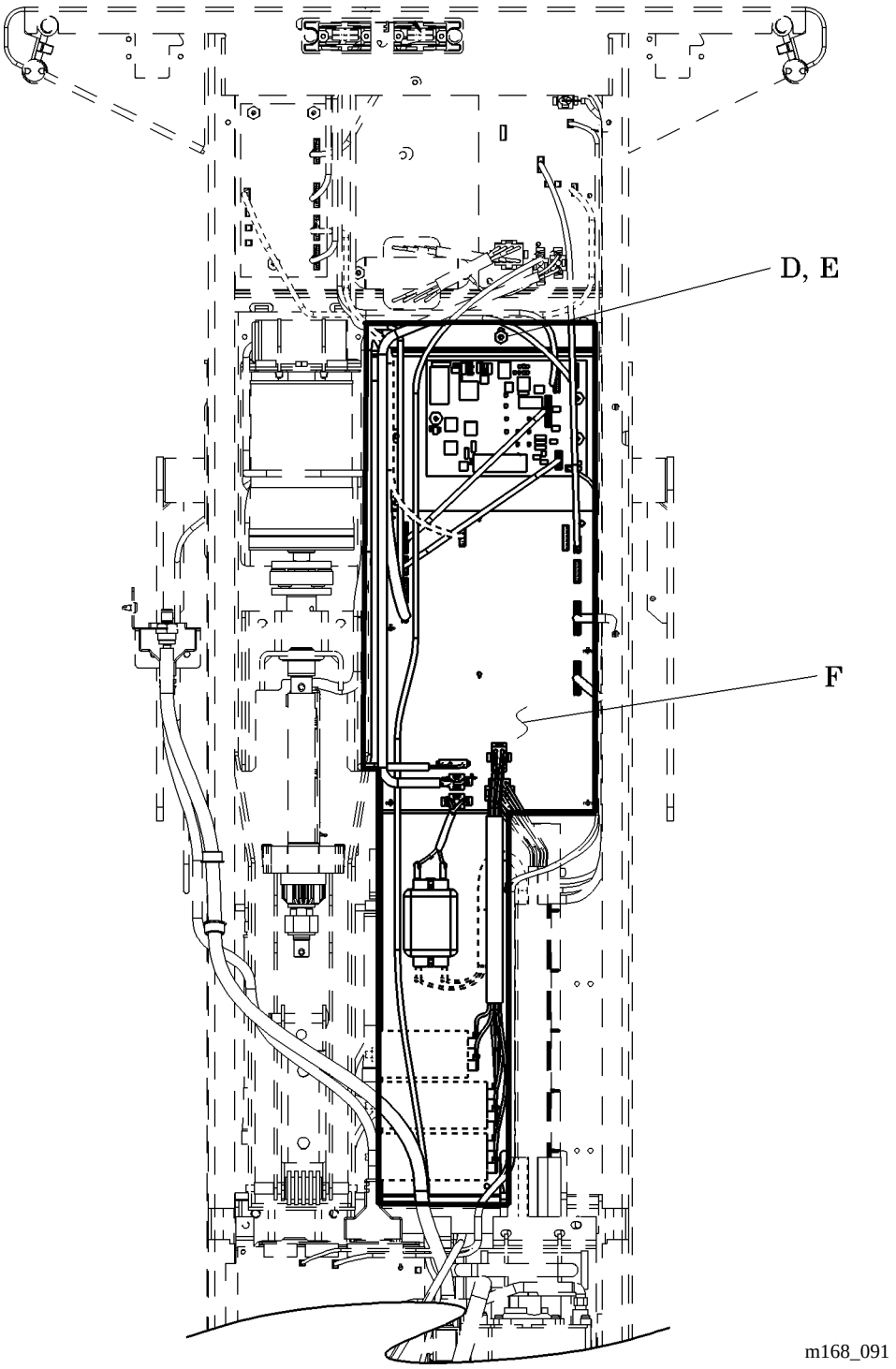

8. Using the small wire cutters, cut the cable ties (G) that secure the wires coming from the circuit board pan (F), the retracting frame (H), and knee motor assembly.

9. Disconnect all the wire connectors from the P.C. boards in the circuit board pan (F).

10. Remove the circuit board pan (F), and set aside.

11. Using the T25 Torx®[1] head screwdriver, remove the screw (H) from the radial bracket (S) on the hilow foot drive assembly (see figure 4-42 on page 4-92).

Figure 4-42. Hilow Foot Limit Switch

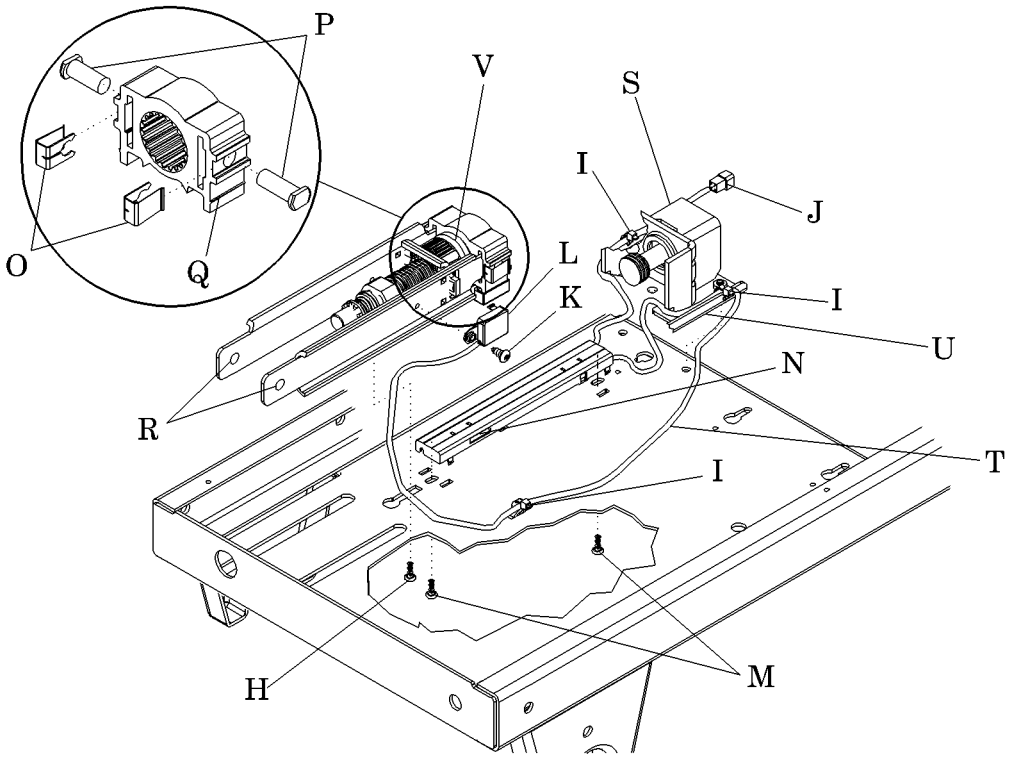

m168_071

12. Using the small wire cutters, cut the cable ties (I) connecting the limit switch cables (T) to the thrust bracket (U) and the bed frame.

13. Disconnect the limit switch connector (J).

1. Torx® is a registered trademark of Textron, Inc.

14. Using the T25 Torx®[1] head screwdriver, remove the screw (K) and detach the limit switch (L) from the hilow strap (R).

15. Remove the two screws (M) from the limit switch assembly (N).

16. Remove the two clips (O) and pins (P) from the torque cage (Q).

17. Using a screwdriver if necessary, remove the hilow straps (R) from the torque cage (Q).

18. Lift up the radial bracket (S) and hilow straps (R), and slide out the limit switch assembly (N).

Replacement

1. Lift up the radial bracket (S) and hilow straps (R), and install the limit switch assembly (N) (see figure 4-42 on page 4-92).

CAUTION:
Do not over-tighten the limit switch mounting screws. Over-tightening the mounting screws can cause the limit switches to operate improperly.

2. Using the T25 Torx® head screwdriver, install the screws (M) in the limit switch assembly (N), but do not tighten.

3. Adjust the hilow foot limit switch assembly so that the tabs (N) are centered in the slots (see figure 4-43 on page 4-94).

1. Torx® is a registered trademark of Textron, Inc.

Figure 4-43. Hilow Foot Limit Switch Package Tab and Slot Orientation

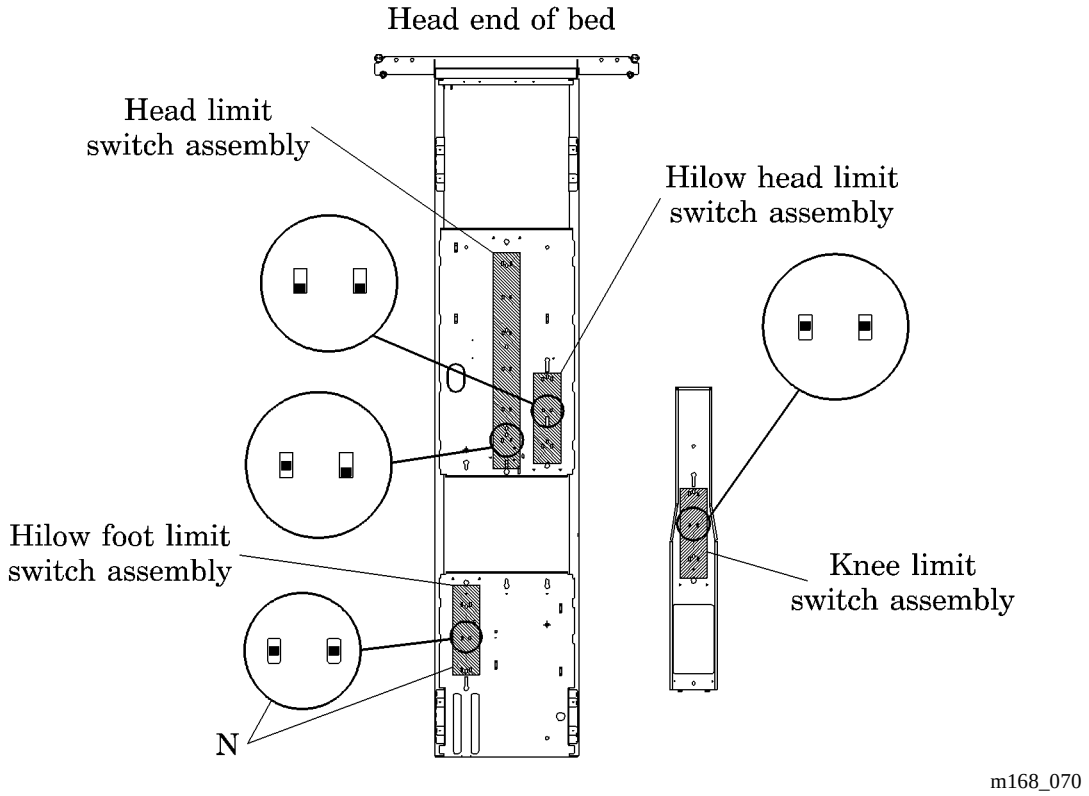

4. Tighten the screws (M) without over-tightening, and secure the limit switch assembly (N) to the bed frame (see figure 4-42 on page 4-92).

5. Insert the hilow straps (R) in the slots on the torque cage (Q), and secure them with the pins (P) and clips (O).

6. Attach the limit switch (L) to the hilow strap (R), and secure it with the screw (K).

7. Connect the limit switch connector (J).

8. Route the limit switch cables (T) and secure them with cable ties (I) to the thrust bracket (U) and bed frame.

9. Install the screw (H) in the radial bracket (S) of the hilow foot drive assembly.

CAUTION:
Failure to align the slide switch and the drive screw when installing the hilow foot drive can cause severe damage to the bed.

10. Align the slide switch (not shown) and the drive screw(not shown) that are fastened to the lift nut (V) and torque cage (Q).

11. Verify that the hilow foot limit switch is correctly adjusted.

12. Install the circuit board pan, (F) and secure it with the screw (D) and nut (E) (see figure 4-41 on page 4-91).

13. Plug the bed into an appropriate power source.

14. To ensure proper operation of the Advanta™ Bed, perform the “Function Checks” on page 2-6.

4.31 Brake Light Switch

Tools required: Phillips head screwdriver
1/4" combination wrench

The switch that actuates the brake light on the footboard control panel is located in the foot-end cross channel of the base frame assembly.

Removal

1. Raise the bed to its highest position.

2. Place the siderails on one side of the bed into the upright position.

SHOCK HAZARD:
Unplug the bed from its power source. Failure to do so could result in personal injury or equipment damage.

3. Unplug the bed from its power source.

4. Remove the two screws (A) and nuts (B) that hold the brake light switch (C) in place (see figure 4-44 on page 4-97).

Figure 4-44. Brake Light Switch

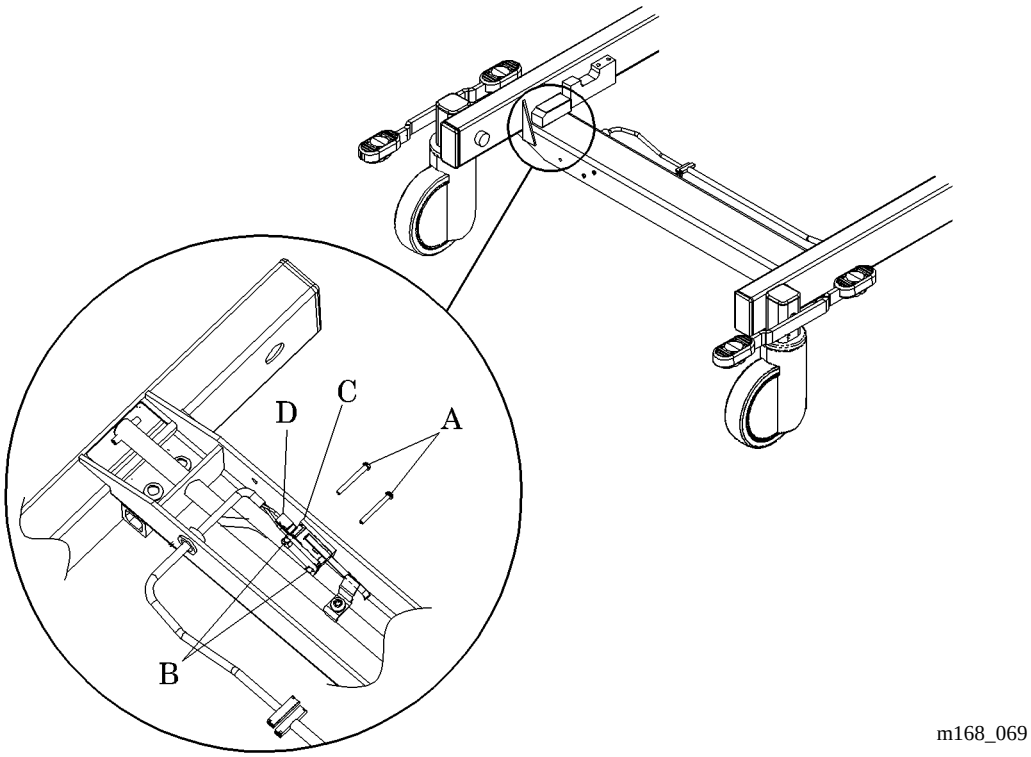

5. Disconnect the brake light switch (C) at the connector (D), and remove it from the bed.

Replacement

1. Install the brake light switch in the reverse order of removal.
2. Plug the bed into an appropriate power source.
3. Test the brakes to ensure that the brake light switch is working properly.
4. To ensure proper operation of the Advanta™ Bed, perform the “Function Checks” on page 2-6.

4.32 Siderail Controls and Speakers

Tools required:	Phillips head screwdriver 7/64" drill bit (# 36) Drill Needle nose pliers #6-32 tap T10 Torx®[1] head screwdriver 1/4" nut driver

Parts required:	(5)	63683	Screw cover

Removal

SHOCK HAZARD:
Unplug the bed from its power source. Failure to do so could result in personal injury or equipment damage.

1. Unplug the bed from its power source.
2. Using the drill and the 7/64" drill bit, drill a hole in each screw cover (A) (see figure 4-45 on page 4-99).

1. Torx® is a registered trademark of Textron, Inc.

Figure 4-45. Siderail Controls

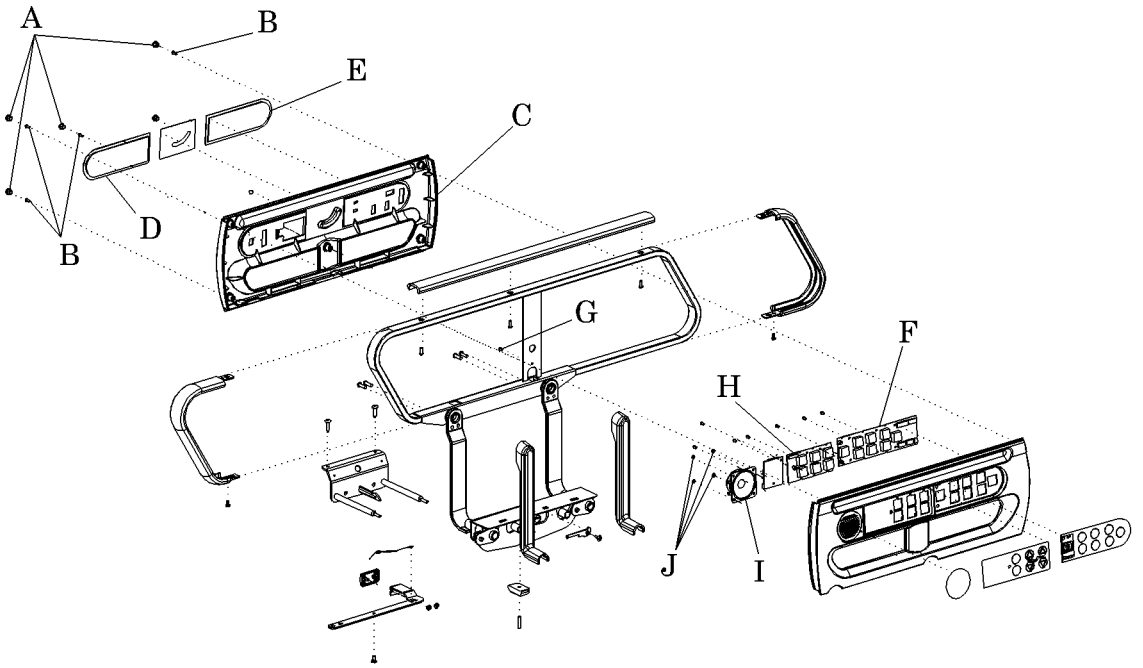

m168_088

3. Thread the #6-32 tap into a screw cover (A), and pull out the screw cover (A).

4. Repeat for all five screw covers (A).

5. Using the phillips head screwdriver or the T10 Torx® head screwdriver, remove the 5 screws (B).

6. Disconnect the cables from the caregiver bed position switch (D), and the optional caregiver bed exit switch (E), if applicable.

7. Remove the caregiver control panel (C).

8. Remove the optional nurse call/entertainment P.C. board (F), if necessary.

9. Using the T10 Torx®[1] head screwdriver, remove the screw (G) that secures the patient control panel to the siderail frame.

10. Remove the bed position P.C. board (H), if necessary.

1. Torx® is a registered trademark of Textron, Inc.

11. To remove the speaker (I), disconnect the wires.

12. Using the 1/4" nut driver, remove the nuts (J), and separate the speaker (I) from the siderail.

Replacement

1. Install the bed position P.C. board (H), if applicable, and secure it to the siderail frame with the screw (G).

2. Install the optional nurse call/entertainment P.C. board (F), if applicable.

3. Using the 1/4" nutdriver, install the speaker (I), if applicable, and secure it with the nuts (J).

4. Connect the speaker wires, if applicable.

5. Connect the cables to the caregiver bed position switch (D), and the optional caregiver bed exit switch (E), as applicable.

6. Using the phillips head screwdriver or the T10 Torx® head screwdriver, install the caregiver control panel (C), and secure it to the siderail with the 5 screws (B).

7. Install the new screw covers (A) in the screw holes.

8. Plug the bed into an appropriate power source.

9. Test the siderail switches and speaker to ensure the bed is working properly.

10. To ensure proper operation of the Advanta™ Bed, perform the “Function Checks” on page 2-6.

4.33 Siderails

Tools required: T25 Torx®[1] head screwdriver
Pliers

Removal

1. Raise the head or foot section of the bed for the siderail being removed.

2. If a head end siderail (D) is being removed, unplug the siderail control cable (G) and siderail communication cable (H), if present, from the bed (see figure 4-46 on page 4-101).

Figure 4-46. Siderails

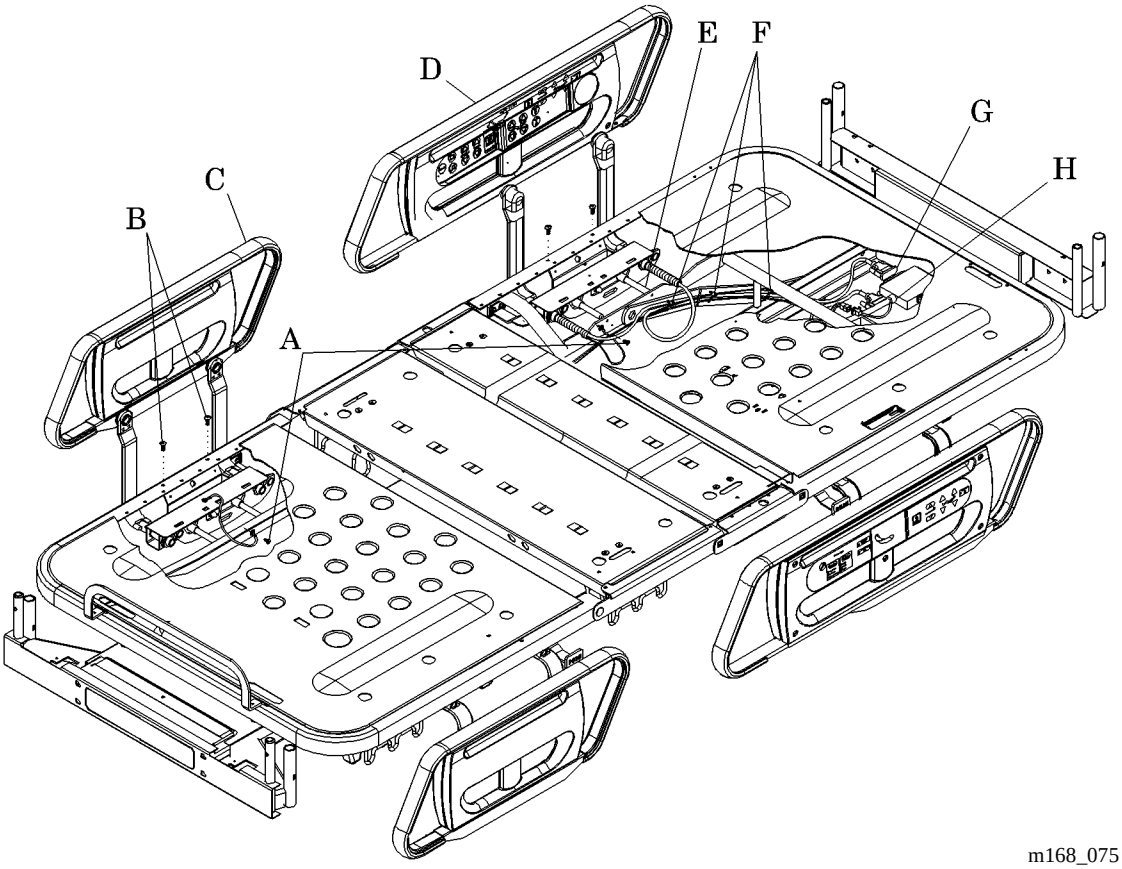

3. Remove the cable ties (F) from the head lift arm (E).

4. Remove the screw (A) that attaches the siderail grounding strap to the bed frame.

1. Torx® is a registered trademark of Textron, Inc.

5. Using the T25 Torx®[1] head screwdriver, remove the two screws (B) that secure the siderail to the head or foot section, and separate the head-end siderail (D) or foot-end siderail (C) from the bed.

Replacement

Install the siderails in the reverse order of removal.

Adjustment

1. Raise the head section or foot section (as applicable) to its highest position.

2. If the strap (I) is bent, use pliers to straighten the strap (see figure 4-47 on page 4-102).

Figure 4-47. Adjusting Hard-to-Rotate Siderails

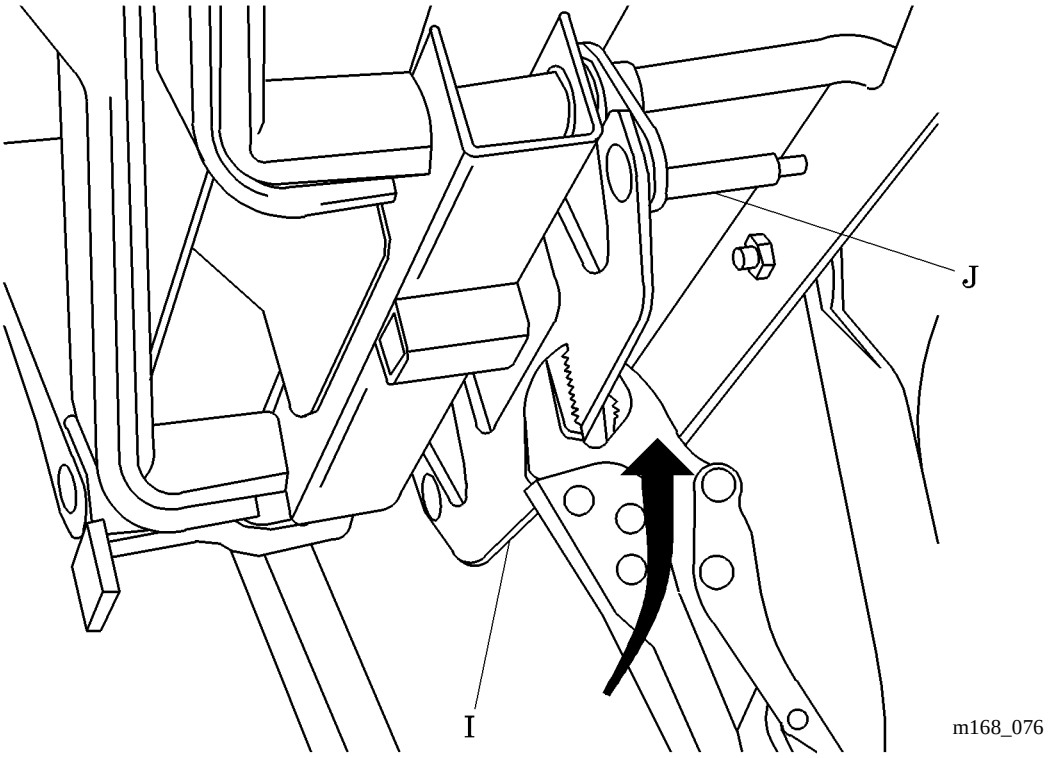

3. Make sure the black slide rods (J) are parallel.

1. Torx® is a registered trademark of Textron, Inc.

4. Clean and lubricate the siderails. See “Scale Calibration” on page 6-3. See “Lubrication Requirements” on page 6-7.

5. If the siderails are frozen:

   a. Raise the siderail to the up position, or remove it from the bed completely.

   b. Apply grease to the grease ports (K) (see figure 4-48 on page 4-103).

Figure 4-48. Grease Ports on Siderails

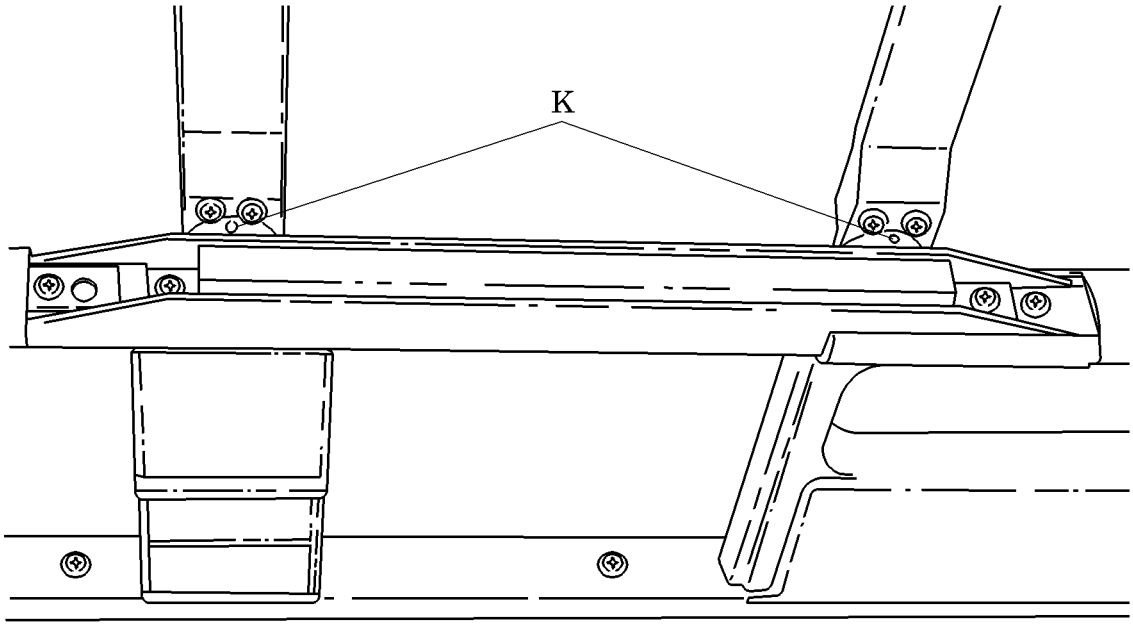

   c. Re-attach the siderail, if it was removed.

6. To ensure proper operation of the Advanta™ Bed, perform the “Function Checks” on page 2-6.

4.34 Power Supply Control P.C. Board

Tools required: Needle nose pliers
3/8" nut driver

Removal

1. Raise the bed to the high position using the hilow function.

SHOCK HAZARD:
Unplug the bed from its power source. Failure to do so could result in personal injury or equipment damage.

2. Unplug the bed from its power source.

3. Remove the footboard from the bed (see “Footboard” on page 4-7).

4. Remove the foot end cover from the bed (see “Foot End Cover” on page 4-9).

5. Disconnect the connectors (A) going to the power supply control P.C. board (B) (see figure 4-49 on page 4-104).

Figure 4-49. Power Supply Control P.C. Board

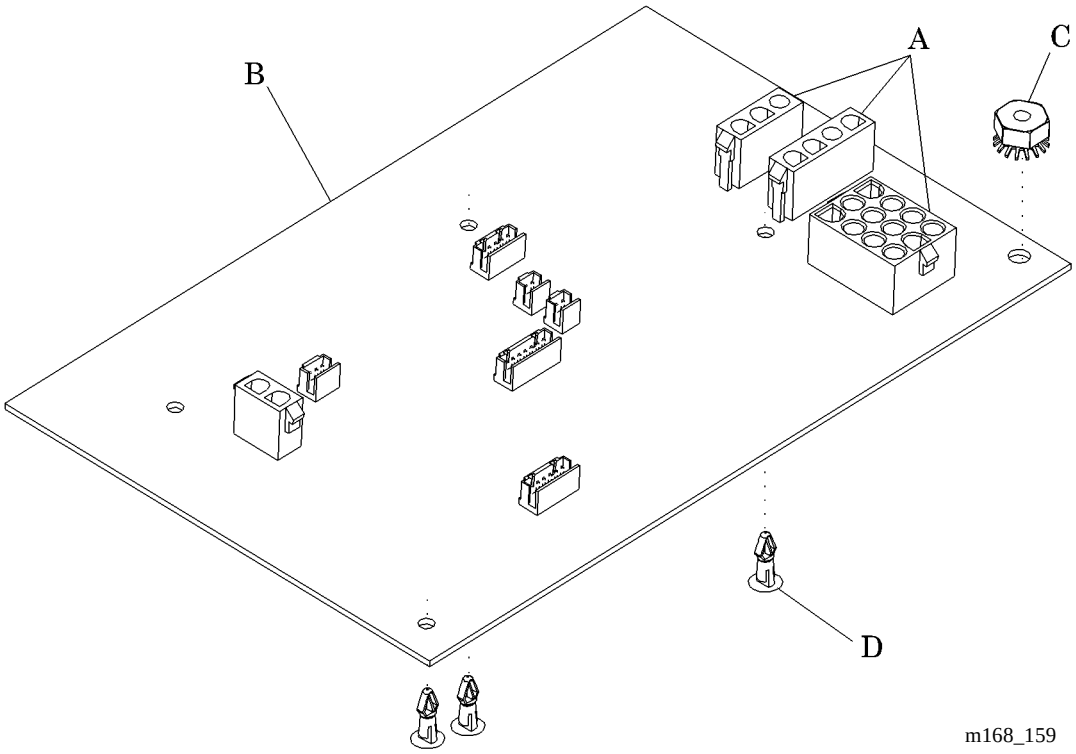

6. Using the 3/8" nut driver, remove the keps nut (C).

CAUTION:
To prevent component damage, ensure that your hands are clean and **only** handle the P.C. boards by their edges.

CAUTION:
When handling electronic components, wear an antistatic strap . Failure to do so, could result in component damage.

7. Using the needle nose pliers if necessary, compress the standoffs (D), and remove the power supply control P.C. board (B).

Replacement

1. Install the power supply control P.C. board (B) in the reverse order of removal.

2. To ensure proper operation of the Advanta™ Bed, perform the “Function Checks” on page 2-6.

4.35 Logic Control P.C. Board

Tools required: Needle nose pliers
3/8" nut driver

Removal

1. Raise the bed to the high position using the hilow function.

SHOCK HAZARD:
Unplug the bed from its power source. Failure to do so could result in personal injury or equipment damage.

2. Unplug the bed from its power source.
3. Remove the footboard from the bed (see “Footboard” on page 4-7).
4. Remove the foot end cover from the bed (see “Foot End Cover” on page 4-9).
5. Note the routing of the cable assemblies to the logic control P.C. board (B).
6. Disconnect the connectors (A) going to the logic control P.C. board (B) (see figure 4-50 on page 4-107).

Figure 4-50. Logic Control P.C. Board

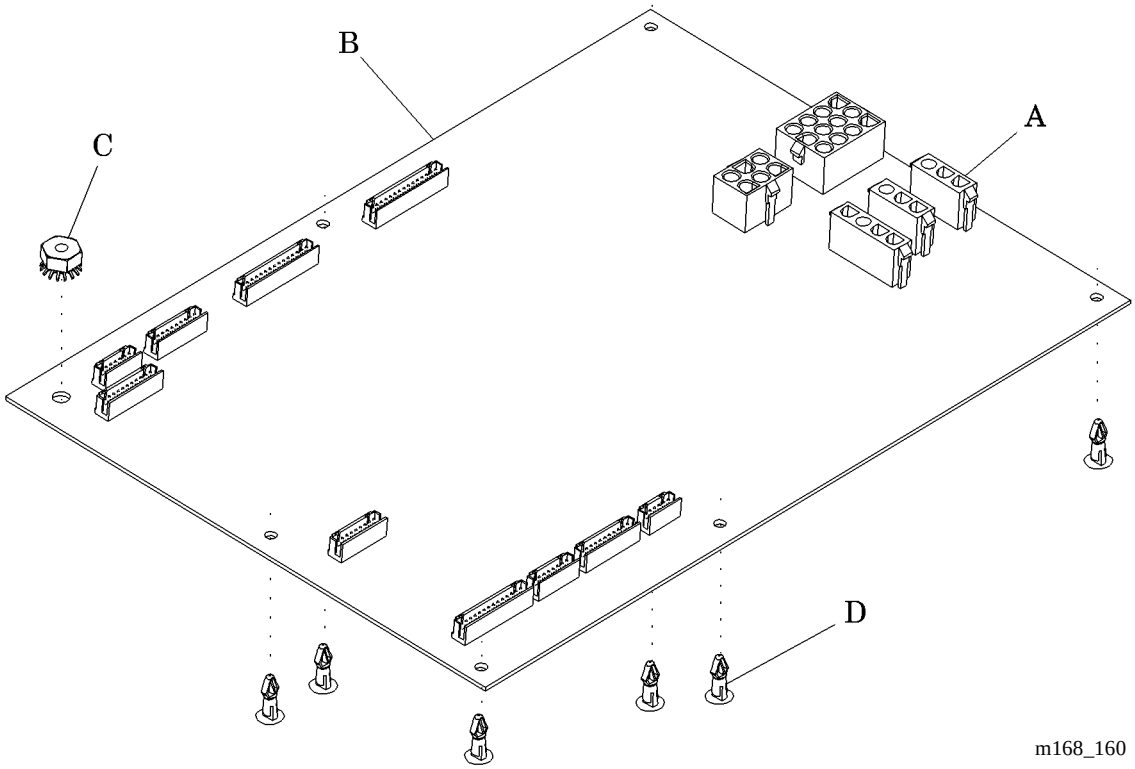

7. Using the 3/8" nut driver, remove the keps nut (C).

CAUTION:
To prevent component damage, ensure that your hands are clean and **only** handle the P.C. boards by their edges.

CAUTION:
When handling electronic components, wear an antistatic strap . Failure to do so, could result in component damage.

8. Using the needle nose pliers if necessary, compress the standoffs (D) and remove the logic control P.C. board (B).

Replacement

1. Install the logic control P.C. board (B) in the reverse order of removal.

2. To ensure proper operation of the Advanta™ Bed, perform the “Function Checks” on page 2-6.

4.36 Footboard Interface P.C. Board

Tools required: 3/8" nut driver

Removal

1. Raise the bed to the high position using the hilow function.

SHOCK HAZARD:
Unplug the bed from its power source. Failure to do so could result in personal injury or equipment damage.

2. Unplug the bed from its power source.

3. Remove the footboard from the bed (see “Footboard” on page 4-7).

4. Remove the foot end cover from the bed (see “Foot End Cover” on page 4-9).

5. Disconnect the connectors (A) going to the footboard interface P.C. board (B) (see figure 4-50 on page 4-107).

Figure 4-51. Footboard Interface P.C. Board

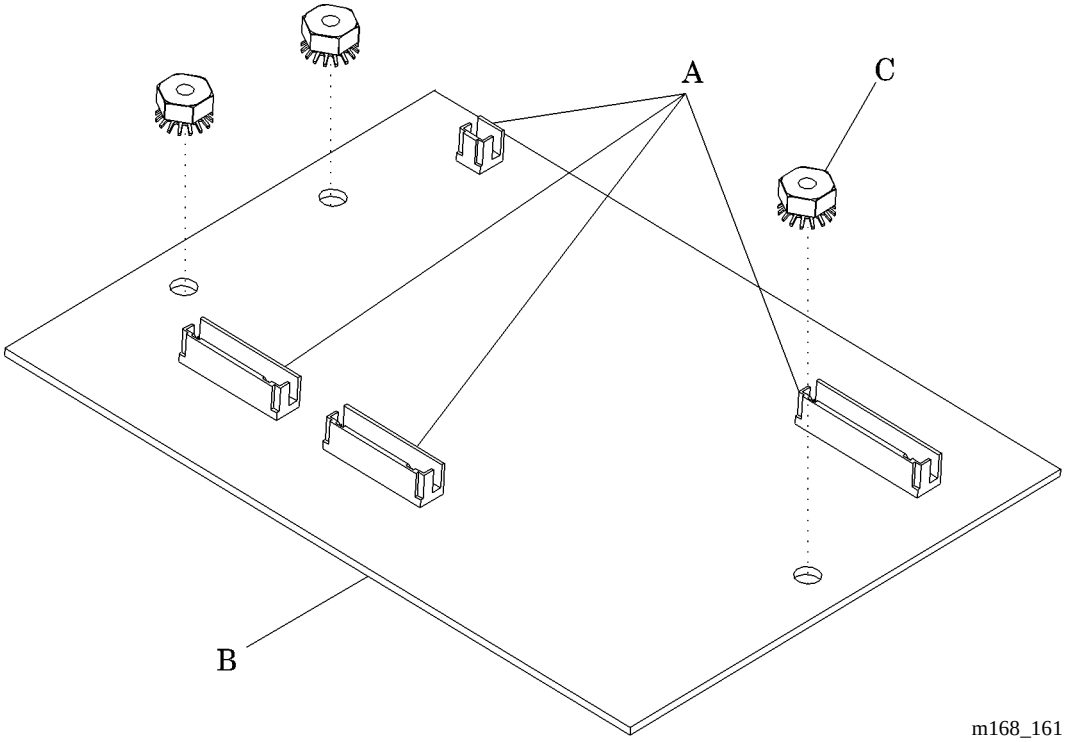

6. Using the 3/8" nut driver, remove the three keps nuts (C).

CAUTION:
To prevent component damage, ensure that your hands are clean and **only** handle the P.C. boards by their edges.

CAUTION:
When handling electronic components, wear an antistatic strap . Failure to do so, could result in component damage.

7. Remove the footboard interface P.C. board (B).

Replacement

1. Install the footboard interface P.C. board (B) in the reverse order of removal.

2. To ensure proper operation of the Advanta™ Bed, perform the “Function Checks” on page 2-6.

4.37 Scale/PPM Control P.C. Board

Tools required: 3/8" nut driver

Removal

1. Raise the bed to the high position using the hilow function.

SHOCK HAZARD:
Unplug the bed from its power source. Failure to do so could result in personal injury or equipment damage.

2. Unplug the bed from its power source.

3. Remove the footboard from the bed (see “Footboard” on page 4-7).

4. Remove the foot end cover from the bed (see “Foot End Cover” on page 4-9).

5. Disconnect the connectors (A) going to the Scale/PPM control P.C. board (B) (see figure 4-52 on page 4-112).

Figure 4-52. Scale/PPM Control P.C. Board

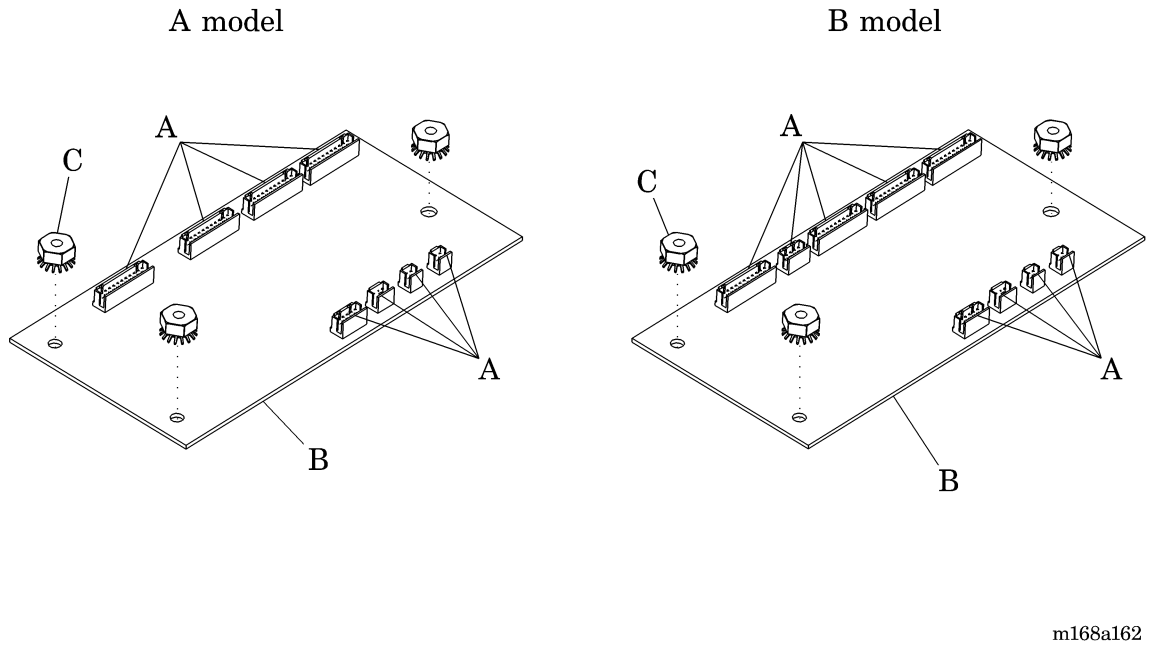

6. Using the 3/8" nut driver, remove the three keps nuts (C).

CAUTION:
To prevent component damage, ensure that your hands are clean and **only** handle the P.C. boards by their edges.

CAUTION:
When handling electronic components, wear an antistatic strap . Failure to do so, could result in component damage.

7. Remove the Scale/PPM control P.C. board (B).

Replacement

1. Install the Scale/PPM control P.C. board (B) in the reverse order of removal.

2. To ensure proper operation of the Advanta™ Bed, perform the “Function Checks” on page 2-6.

4.38 Weigh Load Beam

Tools required: T25 Torx®[1] head socket bit
T25 Torx® head screwdriver
Torque wrench 50-150 in-lb (5.6-17.0 N·m)
Ratchet
4" extension
String 6' (183 cm)
Wood 6" x 6" x 2' block

Removal

1. Set the brakes.

2. Using the head siderail *bed up* switch, raise the bed to its maximum height.

SHOCK HAZARD:
Unplug the unit from its power source. Failure to do so could result in personal injury or equipment damage.

3. Unplug the bed from its power source.

4. Remove all weight from the bed.

NOTE:
If a head end load beam is being removed, the foot end load beam on the same side needs to be removed so the cable can be disconnected fromt the analog board.

5. Using the wood block (A), support the bed frame (B) and weigh frame (C) (see figure 4-53 on page 4-114).

6. Using the T25Torx® head screwdriver, remove the two screws (H) securing the load beam analog board (I) to the weigh frame (C).

7. Disconnect the load beam cable for the load beam being removed.

8. If the load beam being removed is a head end load beam, tie the string to the cable.

9. Using the T25 Torx® head screwdriver, remove the two screws (D) securing the load beam socket (E) to the bed frame (B).

1. Torx® is a registered trademark of Textron, Inc.

Figure 4-53. Weigh Load Beam

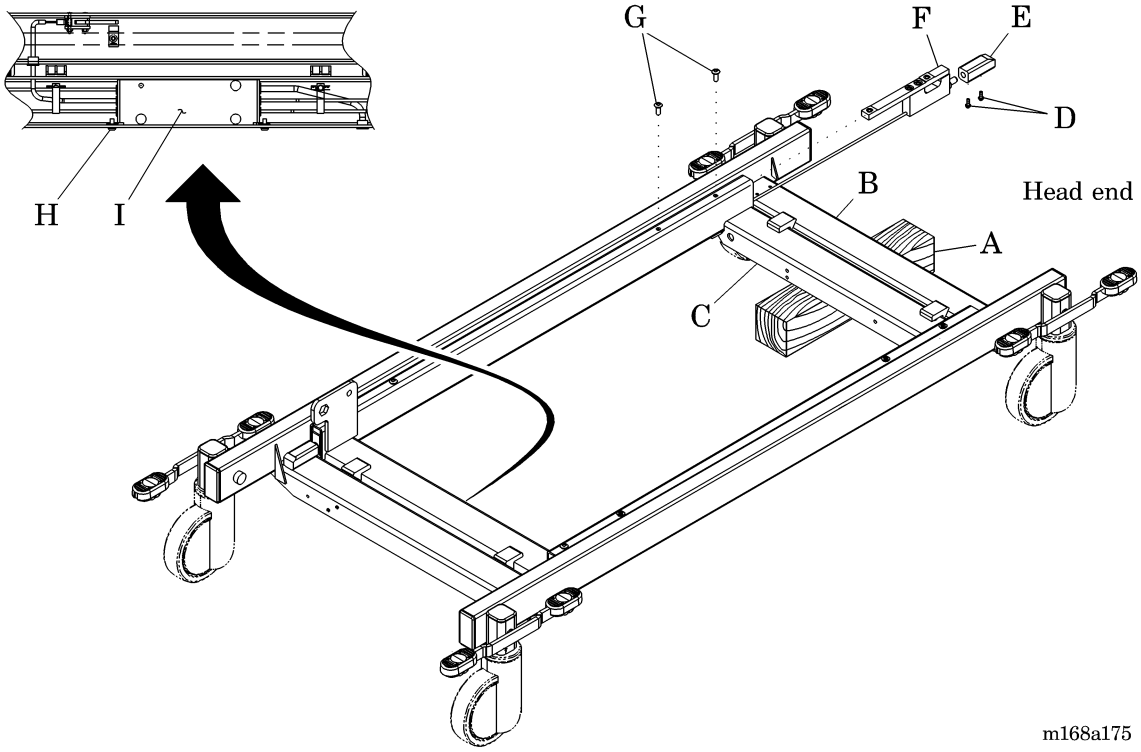

10. Move the bed so the wood block (A) is only under the weigh frame (C).

11. Remove the load beam socket (E).

12. Using the T25 Torx®[1] head screwdriver, remove the two screws (G) securing the load beam (F) to the weigh frame (C).

13. Remove the load beam (F) from the weigh frame (C), if the load beam is a head end load beam, do not remove the string from the weigh frame.

Replacement

1. For head end load beams:
   a. Tie the string to the load beam cable.
   b. Pull the string through the weigh frame while guiding the load beam into the weigh frame.

2. For foot end load beams, install the load beam into the weigh frame.

1. Torx® is a registered trademark of Textron, Inc.

3. Connect the load beam cable to the analog board (I).
4. Using the two screws, install the analog board (I) into the weigh frame (C).
5. Install the two screws (G) to secure the load beam (F) to the weigh frame (C).
6. Using a torque wrench, tighten the two screws (G) to 90 in-lb ± 10 in-lb (10.2 N•m ± 1.1 N•m) of torque.
7. Install the load beam socket (E) onto the load beam (F).
8. Move the bed so the wood block (A) is supporting the weigh frame (C) and bed frame (B).
9. Install the two screws (D) securing the load beam socket (E) to the bed frame (B).
10. Using a torque wrench, tighten the two screws (D) to 90 in-lb ± 10 in-lb (10.2 N•m ± 1.1 N•m) of torque.
11. Remove the wood block (A).

4.39 Patient Position Monitor (PPM) Sensor

Tools required:	T25 Torx®[1] head screwdriver	Small wire cutters
	Needle nose pliers	Hammer
	Digital volt voltmeter	

Removal

1. On beds with ZoneAire® Sleep Surface, press and release the *surface power* switch on the footboard control panel. The green indicator light on the *surface power* switch goes off.
2. Remove the mattress from the bed.
3. Raise the bed to the high position using the hilow function.
4. Raise the head section above 35°.
5. Raise the knee section to the high position.

SHOCK HAZARD:
Unplug the bed from its power source. Failure to do so could result in personal injury or equipment damage.

6. Unplug the bed from its power source.
7. Remove the footboard from the bed.

1. Torx® is a registered trademark of Textron, Inc.

Figure 4-54. Seat Section Panel Removal

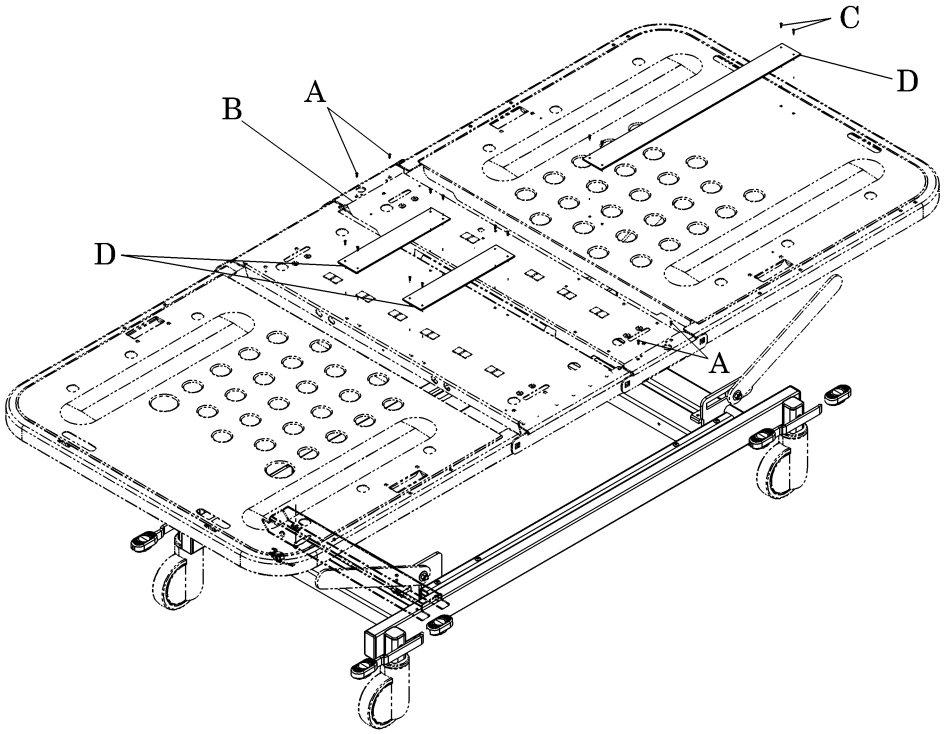

m168a182

8. Using the needle nose pliers, push the four drive rivets (C) securing the PPM sensors (D) to the bed, through the bed frame and PPM sensor (D).

9. Using the small wire cutters, cut and remove the two cable ties securing the PPM sensor (D) cable to the seat crosstubes.

10. Remove the three Torx® head screws securing the foot end cover to the bed.

11. Remove the foot end cover (refer to procedure 4.2).

12. Using the small wire cutters, cut and remove the five cable ties securing the PPM sensor cable (E) to the bed frame (see figure 4-55 on page 4-118).

Figure 4-55. PPM Sensor Removal

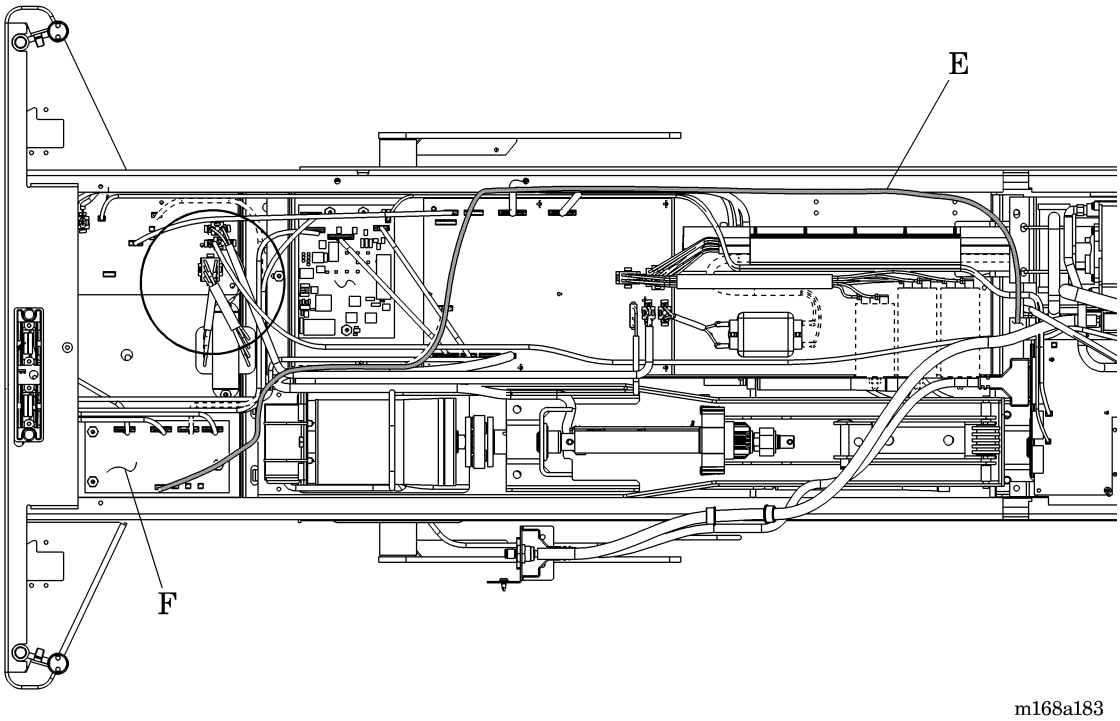

NOTE:
Do not remove the cable ties holding the cables in the electronics pan if possible. It is preferred to feed the sensor cable through the cable ties.

13. Disconnect the PPM sensor cables (E) from the PPM micro P.C. board (F).

14. Remove the PPM sensors and the PPM sensor cables from the bed.

Replacement

1. Using new PPM sensors, thread the PPM sensor cable (E) through the dust pan gap and along the right side of the retracting frame to the PPM micro P.C. board (F) (see figure 4-55 on page 4-118).

NOTE:
The two small PPM sensors can be plugged into either P7 or P8 on the PPM micro P.C. board.

2. Using five cable ties, secure the PPM sensor cable (E) to the electronics pan.

3. Using two cable ties, secure the PPM sensor cable (E) to the seat crosstubes.

CAUTION:
Ensure there are no sharp edges on the drive rivets. Equipment damage can occur.

4. Check the drive rivets for sharp edges.

NOTE:
To ease installation and prevent cracking, soaking the drive rivets in water is recommended.

5. Using the four drive rivets (C) with the blue side of the PPM sensor (D) up, secure the PPM sensors (D) to the bed (see figure 4-54 on page 4-117).

6. Tap lightly with a hammer to properly seat the drive rivets.

7. Install the foot end cover onto the bed (refer to procedure 4.2).

8. Install the footboard onto the bed.

9. Install the mattress on the bed.

10. Plug the bed into an appropriate power source.

11. On beds with ZoneAire® Sleep Surface, press and release the *surface power* switch on the footboard control panel. The green indicator light on the *surface power* switch will illuminate.

12. Lower the head and knee sections of the bed.

13. See “Zeroing for the Out of bed Mode (Beds Without Scales) for beds without scales on page 1-34, or see “Zeroing the Scale” for beds with scales on page 1-35.

14. To ensure proper operation of the Advanta™ Bed, perform the “Function Checks” on page 2-6.

4.40 Junction Box P.C. Board

Tools required: T25 Torx®[1] head screwdriver
Phillips head screwdriver

Removal

1. Raise the bed to the high position using the hilow function.

SHOCK HAZARD:
Unplug the bed from its power source. Failure to do so could result in personal injury or equipment damage.

2. Unplug the bed from its power source.

3. Remove the P379 communication cable (C) from the bed (see figure 4-56 on page 4-120).

Figure 4-56. Removing/Installing the Junction Box P.C. Board

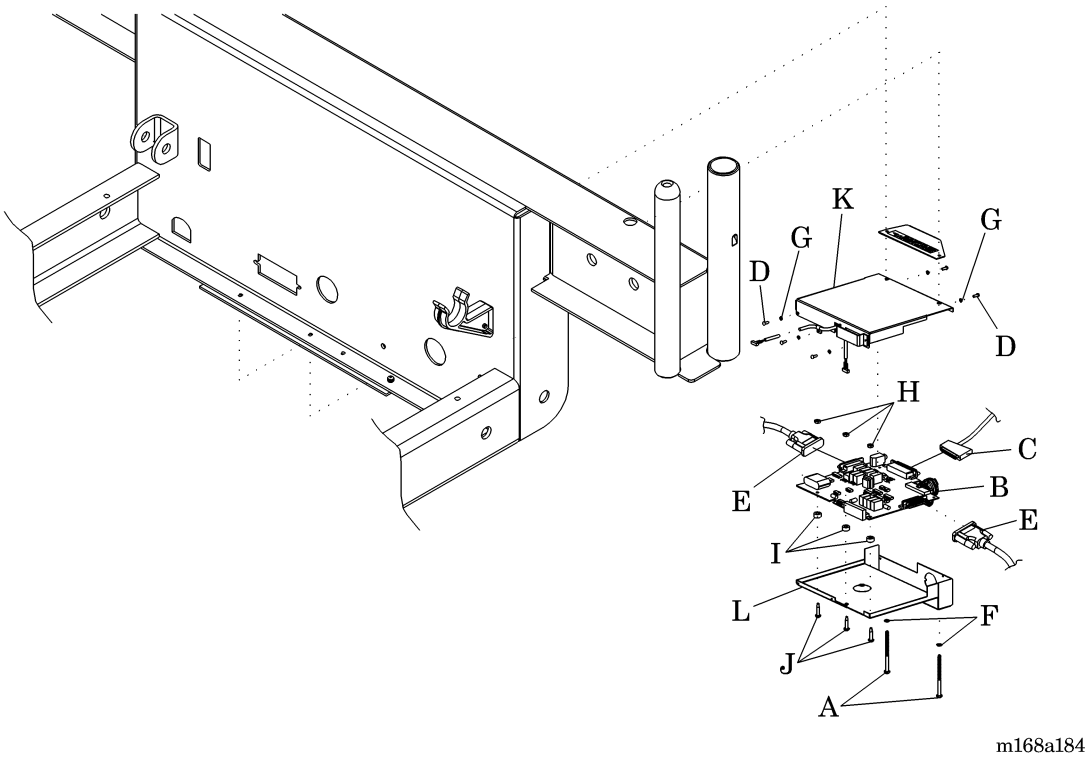

1. Torx® is a registered trademark of Textron, Inc.

4. Remove the two siderail communication cable connectors (E) from the junction box.

5. Using the T25 Torx®[1] head screwdriver, remove the two Torx® head screws (A) and washers (F) connecting the junction box to the bed frame.

6. Remove the five screws (D) and washers (G) holding the junction box top cover (K) to the box bottom cover (L).

7. Remove the three nuts (H), spacers (I), screws (J), and the P.C. board (B) from the junction box.

Replacement

1. Assemble in reverse order.

2. To ensure proper operation of the Advanta™ Bed, perform the “Function Checks” on page 2-6.

1. Torx® is a registered trademark of Textron, Inc.

Chapter 5
Parts List

Chapter Contents

Warranty

HILL-ROM, INC.
LIMITED WARRANTY

Hill-Rom, Inc. (Hill-Rom) has a long tradition of providing superior products and service to our customer. Our goal is “Total Customer Satisfaction”. In that spirit, Hill-Rom is proud to offer the following warranty.

GENERAL WARRANTY (APPLICABLE UNLESS A SPECIFIC WARRANTY IS LISTED)

Hill-Rom warrants to the original purchaser that its products and replacement parts shall be free from defects in material and workmanship for a period of one (1) year from date of delivery. Hill-Rom’s obligation under this warranty is expressly limited to supplying replacement parts and/or service for, or replacing, at its option, any product which is, in the sole discretion of Hill-Rom, found to be defective. In addition to the foregoing one year warranty, Hill-Rom warrants to the original purchaser that the frame and welds on its products will be free from structural defects for the life of the product. Any product upgrade or modification initiated by Hill-Rom does not affect the original product warranty.

SPECIFIC WARRANTIES

MATTRESS WARRANTIES

Hill-Rom warrants to the original purchaser that its mattress product shall be free from defects in material and workmanship for a period of two (2) years from date of delivery. However, electro mechanical mattress components (compressors, valves, printed circuit boards, hoses, and couplers) are covered by the general one (1) year warranty.

EXPENDABLES WARRANTIES

A sixty (60) day limited warranty from date of delivery applies to expendable parts such as cushions, coverlets, software diskettes, locator badge batteries, dome light incandescent bulbs, overhead fluorescent tubes, heating elements, temperature probes, filter sheets, and microspheres. This warranty is limited to replacement of the parts covered.

TO OBTAIN PARTS AND SERVICE

In the United States, call Hill-Rom Technical Support Department at (800) 445-3720, Monday through Friday. In Canada, call Hill-Rom Technical Support Department at (800) 267-2337, Monday through Friday. Outside the United States and Canada, call your authorized Hill-Rom Distributor. In order to expedite service, we request you furnish the following information: customer identification number, product model number, serial number, and description of problem. A qualified specialist will provide, via telephone (United States and Canada), or FAX (Outside the United States and Canada), troubleshooting assistance for facility personnel and provide necessary parts to make repairs. If troubleshooting determines the need for on-site technical service, a qualified service representative will be dispatched. Replacement of non-technical items will be the responsibility of the customer. If requested by Hill-Rom, products or parts for which a warranty claim is made shall be returned prepaid to Hill-Rom’s factory.

OUT OF WARRANTY EXCHANGE POLICY

After the expiration of the original warranty, upon request, Hill-Rom will ship as a replacement, components such as selected: motors and printed circuit boards, for like units returned to Hill-Rom by the original purchaser at a substantial savings. Please call Hill-Rom Technical Support Department for current pricing.

PARTS AVAILABILITY POLICY

Hill-Rom will offer parts for new and remanufactured products for ten (10) years from date of sale; for communications products for five (5) years from date of sale.

Note: Some original component parts and assemblies may not be available; functional equivalents may be substituted.

THE FOREGOING WARRANTIES ARE EXCLUSIVE AND IN LIEU OF ALL OTHER EXPRESS WARRANTIES AND IMPLIED WARRANTIES, INCLUDING BUT NOT LIMITED TO, THE IMPLIED WARRANTIES OF MERCHANTABILITY AND FITNESS OF PURPOSE. HILL-ROM’S OBLIGATION UNDER THESE WARRANTIES SHALL NOT INCLUDE ANY LIABILITY FOR LOSS OF PROFITS, DIRECT, INDIRECT OR CONSEQUENTIAL DAMAGES OR DELAYS. Some states, provinces, or countries do not allow the exclusion or limitation of incidental or consequential damages, so the above exclusion or limitation may not apply. Any improper or negligent use, any alterations or repairs not in accordance with Hill-Rom’s manuals or performed by others in such manner as in Hill-Rom’s sole judgment affects the product materially and adversely, shall void these warranties. These warranties do not cover failures due to misuse, abuse, neglect, or lack of routine maintenance. No employee or representative of Hill-Rom is authorized to change these warranties in any way or grant any other warranty unless in writing and signed by a Hill-Rom officer. These warranties provide specific legal rights; but, there may be other available rights, which vary from state to state, province to province, or country to country.

Revised October 20, 1998

Hill-Rom Company, Inc., 1069 State Route 46 E, Batesville, IN 47006-9167

5

NOTES:

Service Parts Ordering

Using the parts lists in this manual, identify the part number(s) you require. Find the product number and serial number on the product identification label (A) (see figure 5-1 on page 5-5).

Figure 5-1. Product Identification Label Location

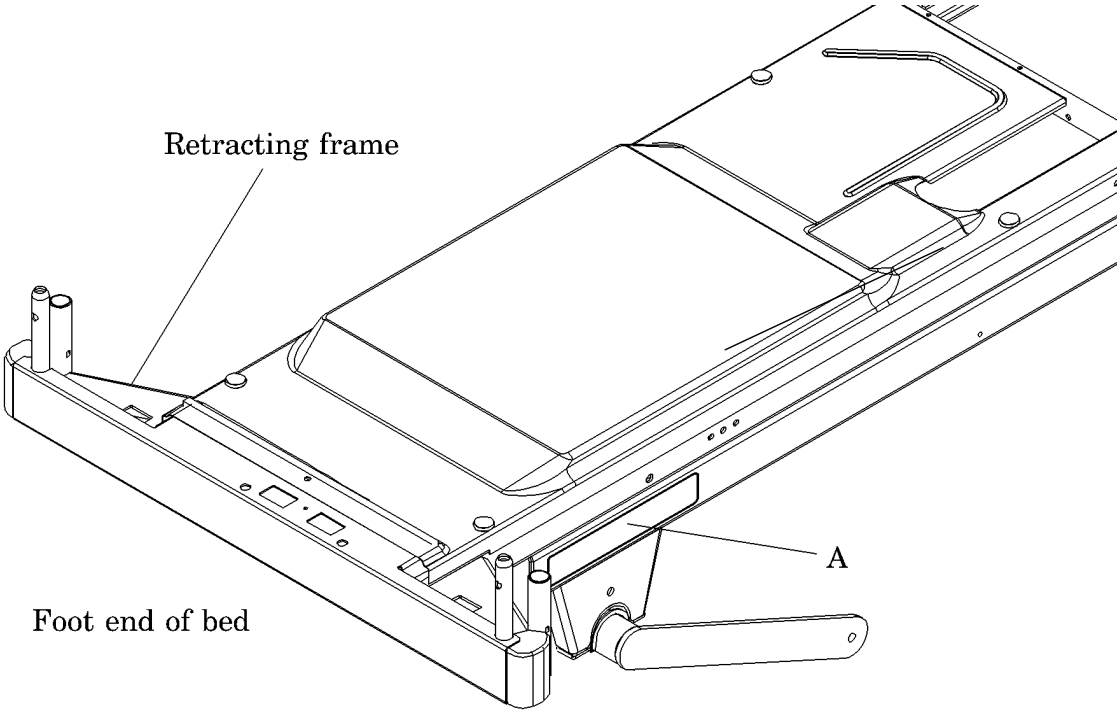

m168_007

Call Hill-Rom Technical Support at (800) 445-3720 with the following information:

- Six-digit customer account number
- Purchase order number
- Product number
- Serial number
- Part number(s)

To promptly order parts, request part prices and availability, or follow up on a service order, use the following Hill-Rom fax number:

(812) 934-8472

Terms:

- Net 30 days
- F.O.B. Batesville, IN
- Prepaid shipping charges added to invoice
- All orders shipped UPS ground unless specified

Address all inquiries to:

ATTN TECHNICAL SUPPORT—PARTS
HILL-ROM COMPANY, INC.
1069 STATE ROUTE 46 E
BATESVILLE IN 47006-9167

Address all return goods to:

ATTN SERVICE STORES
DISTRIBUTION CENTER DOOR D23
HILL-ROM COMPANY, INC.
COUNTY ROAD 300E
BATESVILLE IN 47006-9167

NOTE:
To eliminate possible delays or incorrect billings, **do not** return any items without a Return Material Authorization (RMA) number. When a return is requested, an RMA packet is included with each order. This packet includes an RMA number, instructions, and a shipping label. If an RMA number is not available, obtain one by phoning Hill-Rom Technical Support at (800) 445-3720.

Exchange Policy

The following are policies for in-warranty and out-of-warranty exchanges from Hill-Rom.

In-Warranty Exchanges

In some cases, Hill-Rom will request that parts/products be returned for inspection. When this occurs, you are expected to return parts/products within 30 days of receipt of the exchange part. If you fail to return the inoperative parts/products within the 30 day period, Hill-Rom will invoice your facility for the full selling price of the parts/products.

NOTE:
The preceding billing procedure pertains **only** to parts/products that Hill-Rom requests to be returned.

In some cases, the invoice accompanying the parts will show the full selling price (only for internal use at Hill-Rom). Do not confuse this price with your price.

Do not return any parts without an RMA number. When parts/products have been requested to be returned, Hill-Rom will include an RMA packet with the parts/products shipment. If an RMA number is not available, obtain one by phoning Hill-Rom Technical Support at (800) 445-3720.

Out-of-Warranty Exchanges

You are expected to return the inoperative parts/products within 30 days of receipt of the exchange part. Hill-Rom will include an RMA packet with the parts/products shipment. If an RMA number is not available, obtain one by phoning Hill-Rom Technical Support at (800) 445-3720. Hill-Rom will invoice your facility for the full selling price of the parts/products. Upon return of the inoperative parts/products, Hill-Rom will issue a credit to your facility for **the difference between the exchange price and the full selling price of the parts/products**.

Recommended Spare Parts

For a recommended spare parts list to service five units or more, see table 5-1 on page 5-8.

Table 5-1. Recommended Spare Parts—All Beds

Part Number	Quantity	Description
SA1551 (1600)	1	Miscellaneous hardware kit
6360801 (1600)	1	Bed exit sensor, large
6360802 (1600)	1	Bed exit sensor, small
44740 (1600)	1	Sensor control board (ZoneAire® beds)
45846 (1600)	1	Quick coupling—female
38189 (1600)	1	Quick coupling—male (beds with PPM system)
47083 (1600)	1	Switching valve assembly
4476006 (1600)	1	P.C. board, air control
36973-03 (1600)	3	Standoff ½"
19562 (1600)	10	Latch cover
38566 (1600)	5	End cane
6323948 (1600)	5	Top cane, foot siderail
29457-48 (1600)	10	Hole plug
6343102 (1600)	2	Label, lighting and bed control—left (beds without lighting)
6343104 (1600)	2	Label, lighting and bed control—left (beds with lighting)
6343601 (1600)	2	Label, nurse call without entertainment, lh
6343602 (1600)	2	Label, nurse call with entertainment, lh (nurse call with lighting models only)
6321101 (1600)	1	Inner patient II assembly (beds with nurse call)
19833-48 (1600)	4	Wire cover (left or right)
6323848 (1600)	2	Top cane, head siderail
6350101 (1600)	1	Caregiver switch assembly, lh with nurse call
6350102 (1600)	1	Caregiver switch assembly, lh without nurse call
6350002 (1600)	1	Caregiver switch assembly—rh without nurse call
6350001 (1600)	1	Caregiver switch assembly—rh (beds with nurse call)
6343202 (1600)	2	Label, nurse call, entertainment—right (beds with nurse call and entertainment)

Part Number	Quantity	Description
6343201 (1600)	2	Label, nurse call, no entertainment—right (beds with nurse call)
6343103 (1600)	2	Label, lighting and bed control—right (beds with lighting)
6343101 (1600)	2	Label, lighting and bed control—right (beds without lighting)
6342901 (1600)	1	Label, footboard control (beds without scales and without air surfaces)
62876 (1600)	1	Control panel door
43369 (1600)	0 or 1	Hilow motor 115V AC
64190 (1600)	1	Hilow foot switch housing assembly
64193 (1600)	1	Hilow head switch housing assembly
43370 (1600)	0 or 1	Head motor—115V AC
64195 (1600)	1	Head switch housing assembly
35000S (1600)	0 or 1	Universal motor assembly (115V AC)
64194 (1600)	1	Knee drive limit assembly
6720301 (1600)	1	Inner patient II assembly (beds with PPM) (B model beds)

Base Frame Assembly

Figure 5-2. Base Frame Assembly

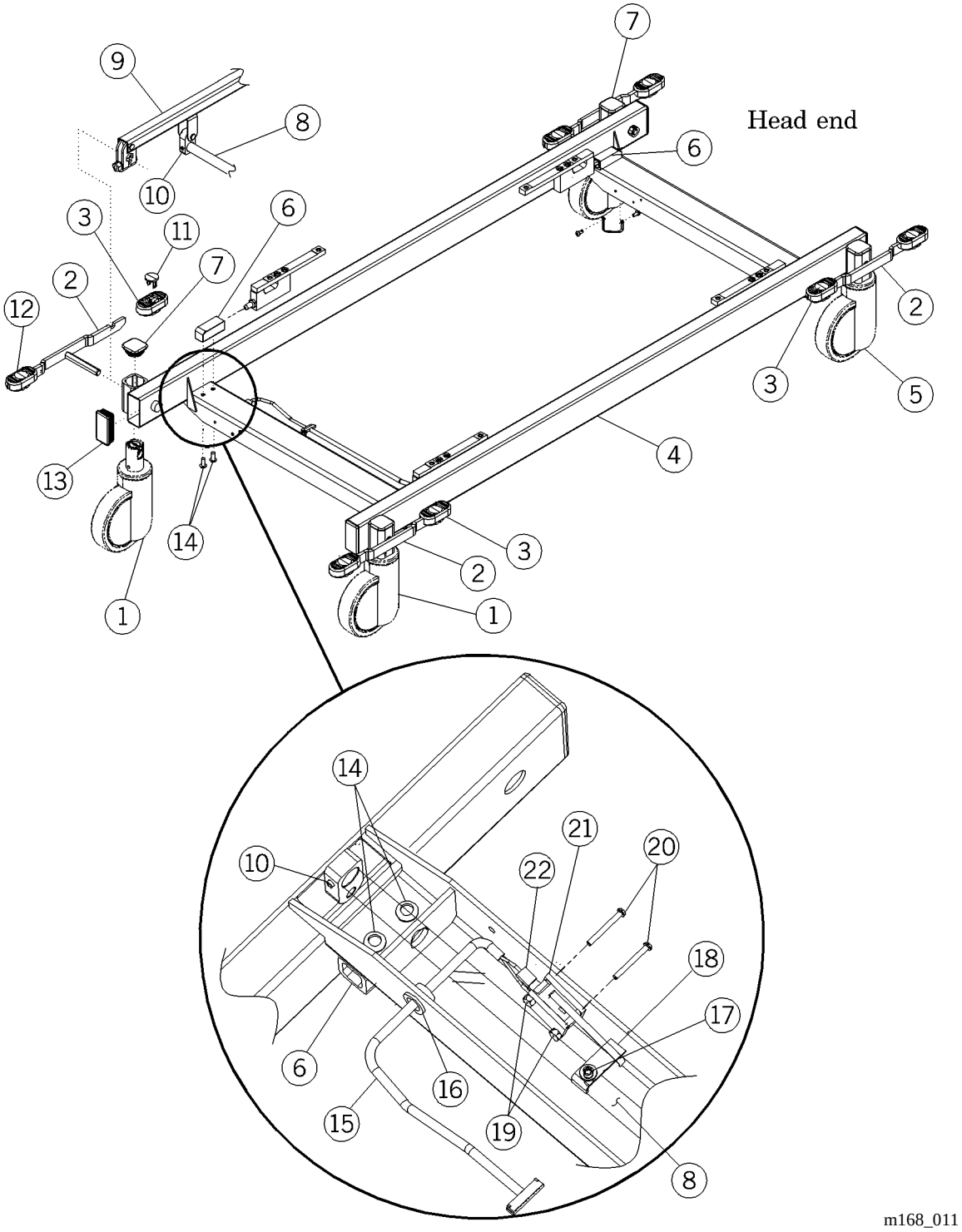

Table 5-2. Base Frame Assembly

Item Number	Part Number	Quantity	Description
1	6390602 (1600)	2	Caster, 5" single wheel, brake/steer
2	63708 (1600)	4	Pedal weldment
3	49174 (1600)	8	Pad, brake/steer pedal
4	63583 (1600)	1	Base weldment
5	6390601 (1600)	2	Caster, 5" single wheel, brake
6	65773 (1600)	4	Load beam socket
7	63470 (1600)	4	Caster tube cap (plastic)
8	63674PL (1600)	2	Cross shaft
9	63679 (1600)	2	Brake/steer linkage assembly
10	65026 (1600)	4	Screw
11	491420160 (1600)	4	Button, brake pedal (orange)
12	491420258 (1600)	4	Button, steer pedal (green)
13	63471 (1600)	4	Side rail end cap (plastic)
14	49521 (1600)	8	Torx®[a] screw
15	63723 (1600)	1	Cable, analog to brake
16	24925 (1600)	2	Bushing
17	43878 (1600)	3	Torx® button head screw
18	63907PL (1600)	1	Brake switch lever
19	20605 (1600)	2	Locknut
20	34402 (1600)	2	Screw
21	34401 (1600)	2	Spacer
22	40723 (1600)	1	Logic switch

a. Torx® is a registered trademark of Textron, Inc.

Weigh Frame Assembly

Figure 5-3. Weigh Frame Assembly

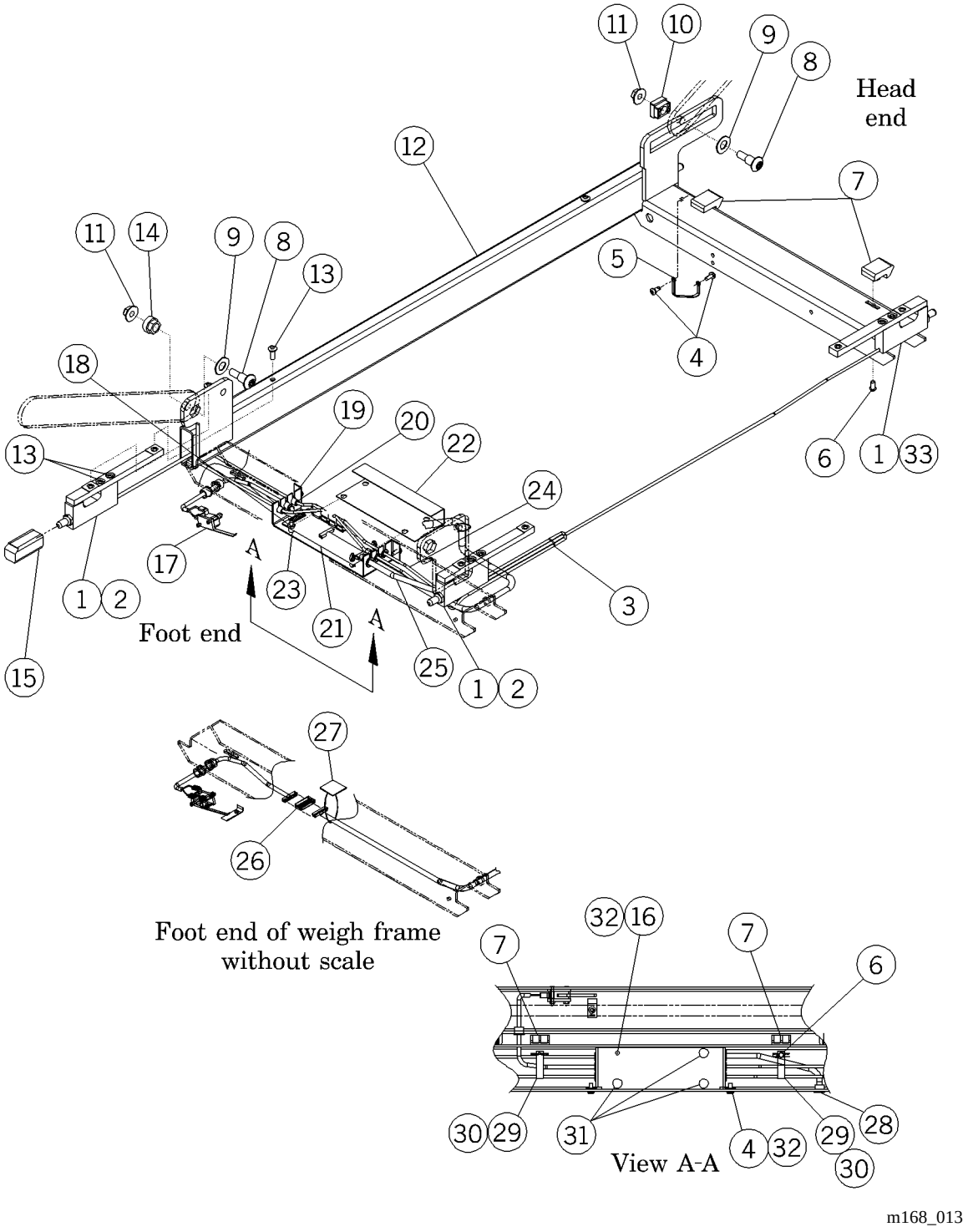

Table 5-3. Weigh Frame Assembly

Item Number	Part Number	Quantity	Description
1	6538603 (1600)	0 or 4	Dummy load beam assembly (beds without scale/PPM)
2	6538602 (1600)	0 or 2	Load beam assembly, 18" (beds with scale/PPM)
3	19124 (1600)	1 or 2	Large cable tie
4	43878 (1600)	2	Torx®[a] button head screw
5	4565804 (1600)	1	Ground strap assembly
6	43389 (1600)	4	Hilow Torx® screw
7	61992 (1600)	4	Base bumper
8	43656 (1600)	4	Shoulder bolt
9	43989 (1600)	4	Nylon washer
10	63669 (1600)	2	Bearing, lift arm
11	43926 (1600)	4	Hex flange locknut
12	63483PC (1600)	1	Weigh frame weldment
13	49521 (1600)	8	Torx® screw
14	43657 (1600)	2	Bushing—retracting arm
15	65773 (1600)	4	Load beam socket
16	43879 (1600)	0 or 1	Torx® button head screw (beds with scale/PPM)
17	40723 (1600)	1	Logic switch
18	28837 (1600)	1	Hex nut (beds with scale)
19	63686PC (1600)	1	Circuit board cover (weigh frame with scale/PPM only)
20	18148H01 (1600)	5	Open closed bushing (beds with scale/PPM)
21	4975102 (1600)	1	Analog board (beds with scale/PPM)
22	42944 (1600)	1	Insulator (beds with scale)
23	44724 (1600)	0 or 1	Standoff spacer (beds with scale/PPM)
24	6372101 (1600)	1	Cable, bed exit to analog
25	6371904 (1600)	0 or 1	Cable assembly (blue) (beds with scale/PPM)
26	4467811 (1600)	1	Transition connector (weigh frame without scale/PPM only)

Item Number	Part Number	Quantity	Description
27	64565 (1600)	0 or 1	Cable tie mount, adhesive backed (beds without scale/PPM)
28	9610H01 (1600)	1	Bushing, open, close, snap
29	19124 (1600)	3 or 5	Large cable tie (3 without scale/PPM, or 5 with scale/PPM)
30	49622 (1600)	2	Wire tie mount
31	3976301 (1600)	3	Standoff (beds with scale/PPM)
32	23208 (1600)	0 or 3	Lockwasher (beds with scale/PPM)
33	6538601 (1600)	0 or 2	Load beam assembly, 48" (beds with scale/PPM)

a. Torx® is a registered trademark of Textron, Inc.

NOTES:

Intermediate Frame Assembly

Figure 5-4. Intermediate Frame Assembly

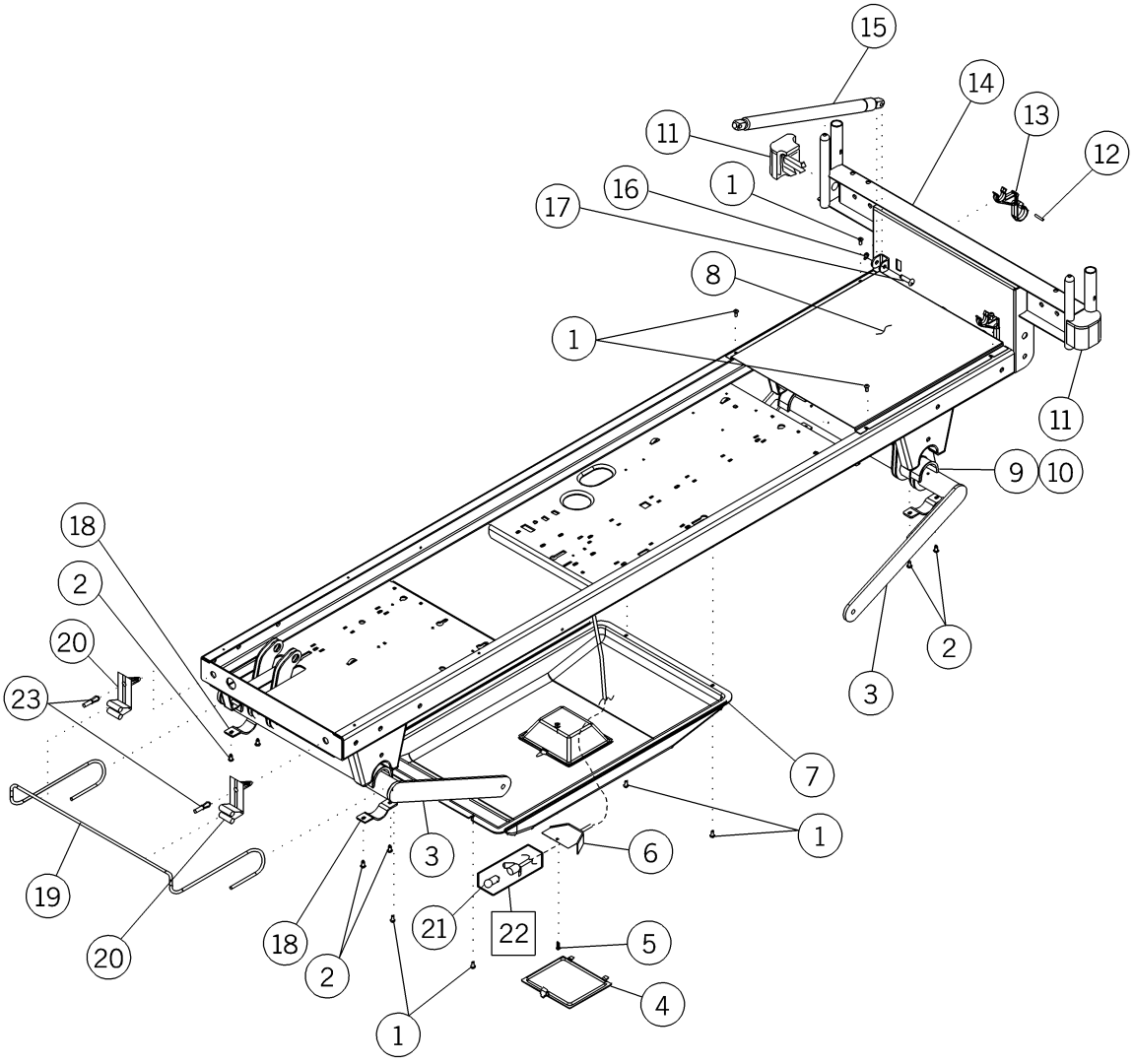

m168a015

Table 5-4. Intermediate Frame Assembly

Item Number	Part Number	Quantity	Description
1	43878 (1600)	8	Torx®[a] button head screw
2	44489 (1600)	8	Torx® screw
3	63809PC (1600)	2	Lift arm assembly
4	63685 (1600)	1	Night light lens
5	42142 (1600)	1	Pan head screw
6	49175PL (1600)	1	Enclosure, night light
7	63684 (1600)	1	Motor cover
8	4336648 (1600)	1	Stationary head cover
9	19297 (1600)	4	Bushing
10	SA3351 (1600)	As required	Lithium grease
11	64857 (1600)	2	Head channel cap
12	19636 (1600)	2	Slotted spring pin
13	44154 (1600)	2	IV pole/cord clip
14	4575248 (1600)	1	Intermediate frame weldment
15	43363 (1600)	1	Dampener—CPR head section
16	35325 (1600)	1	E-ring
17	43394 (1600)	1	Clevis pin
18	34721 (1600)	4	Retaining strap
19	64883 (1600)	1	Accessory bar
20	64930 (1600)	2	Accessory bar clip
21	4734501 (1600)	1	Lamp, mini incandescent
22	4734601 (1600)	1	Cable assembly, lamp
23	36790 (1600)	2	Drive rivet

a. Torx® is a registered trademark of Textron, Inc.

Retracting Frame Assembly

Figure 5-5. Retracting Frame Assembly

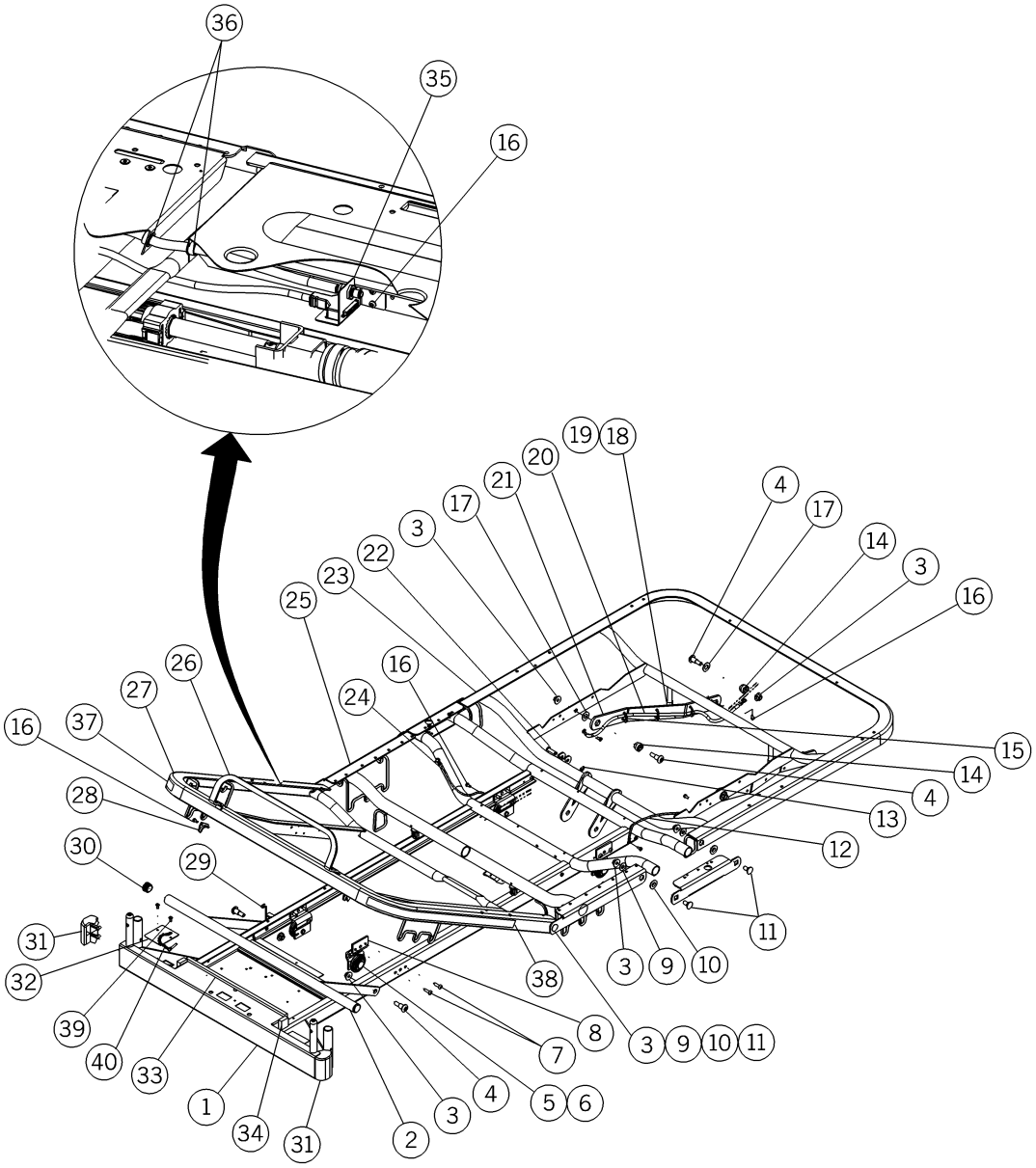

Note: Frame covers removed for clarity.

m168a016

Table 5-5. Retracting Frame Assembly

Item Number	Part Number	Quantity	Description
1	63619 (1600)	1	Retracting frame weldment
2	4370748 (1600)	1	Foot rack assembly
3	43926 (1600)	12	Hex flange locknut
4	43656 (1600)	6	Shoulder bolt
5	34922 (1600)	4	Roller
6	SA3351 (1600)	As required	Lithium grease
7	43880 (1600)	8	Torx®[a] pan head screw
8	44075 (1600)	4	Roller bracket assembly
9	4540 (1600)	6	Washer
10	44092 (1600)	6	Oilite®[b] bushing
11	37104 (1600)	6	Shoulder screw
12	4565818 (1600)	1	Ground strap
13	35325 (1600)	1	E-ring
14	43657 (1600)	4	Bushing—retracting arm
15	19124 (1600)	3	Large cable tie
16	43878 (1600)	15	Torx® button head screw
17	43989 (1600)	4	Nylon washer
18	34838 (1600)	2	Vinyl cap
19	11217 (1600)	As required	Adhesive
20	35176 (1600)	1	Ground strap assembly
21	63626PC (1600)	2	Retracting arm
22	43394 (1600)	1	Clevis pin
23	433520348 (1600)	1	Head section welded assembly
24	4565817 (1600)	1	Ground strap assembly
25	435810148 (1600)	1	Knee section welded assembly
26	3990148 (1600)	1	Mattress stop
27	435800348 (1600)	1	Foot section welded assembly
28	19887 (1600)	2	Foot rack insert
29	19528 (1600)	1	Spring, rh

Item Number	Part Number	Quantity	Description
30	45642 (1600)	2	Ribbed insert
31	64856 (1600)	2	Foot channel cap
32	64645 (1600)	2	Cover plate
33	40889 (1600)	1	Gasket
34	65790 (1600)	2	Gasket
35	45842 (1600)	1	Surface connector assembly
36	39416 (1600)	2	Bushing
37	45648-01 (1600)	1	Label, heel relief, LH
38	45648-02 (1600)	1	Label, heel relief, RH
39	43878 (1600)	4	Screw
40	66733	2	Release pin assembly

a. Torx® is a registered trademark of Textron, Inc.
b. Oilite® is a registered trademark of Beemer Precision, Incorporated.

Cover Assemblies

Figure 5-6. Cover Assemblies

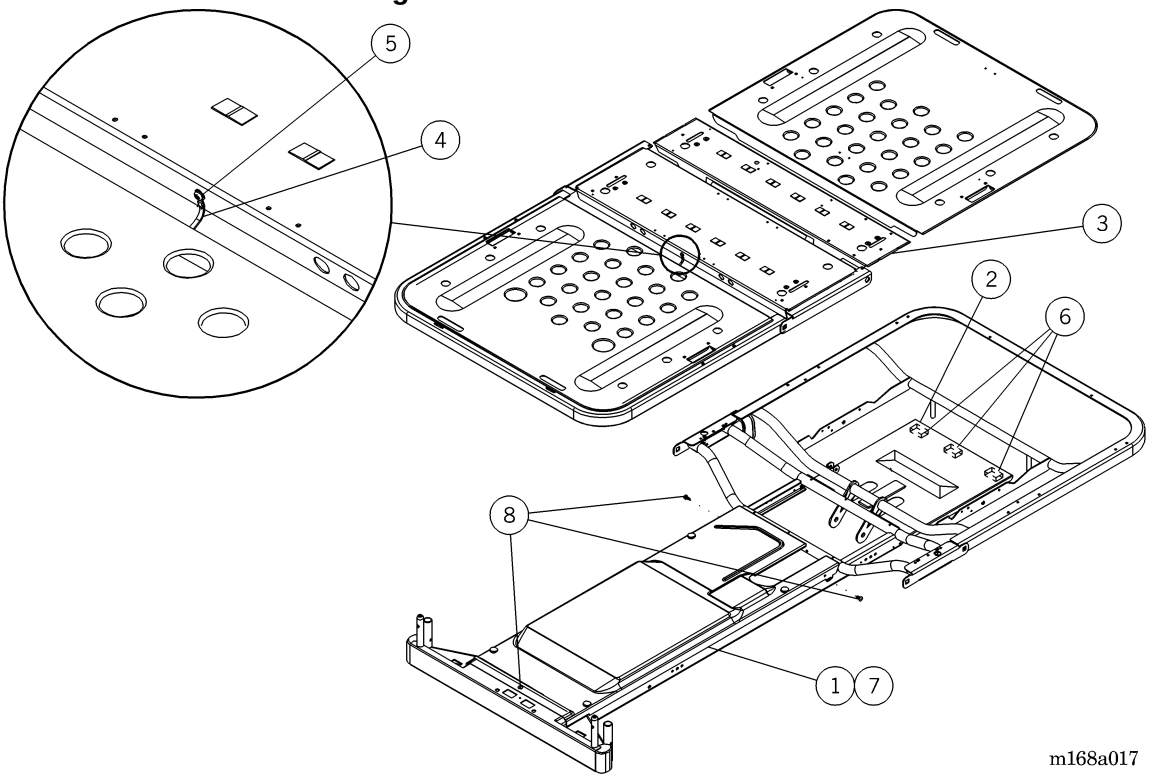

Table 5-6. Cover Assemblies

Item Number	Part Number	Quantity	Description
1	458920148 (1600)	1	Top cover assembly (A model beds)
2	SA1623-48 (1600)	1	Sliding head cover with felt pads
3	45886pc (1600)	1	Seat pan
4	4565804 (1600)	1	Ground strap assembly
5	43878 (1600)	1	Torx®[a] button head screw
6	22646 (1600)	3	Felt pads
7	6786401	1	Top cover assembly (B model beds)
8	47172	3	Screw

a. Torx® is a registered trademark of Textron, Inc.

5

CPR Release

Figure 5-7. CPR Release

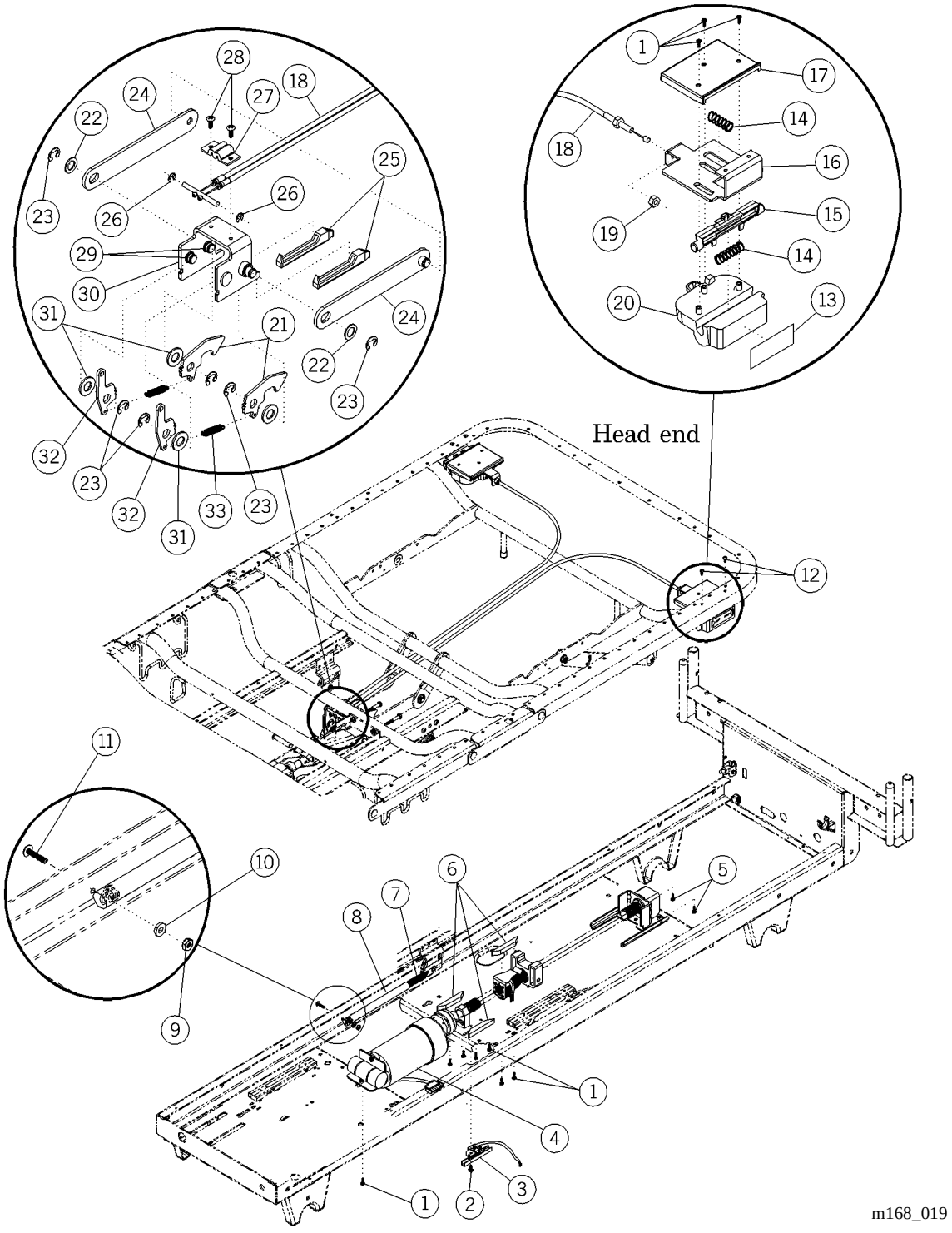

Table 5-7. CPR Release

Item Number	Part Number	Quantity	Description
1	43389 (1600)	12	Hilow Torx®[a] screw
2	35072 (1600)	1	Shoulder screw
3	60945 (1600)	1	CPR cable assembly
4	6200402 (1600)	1	Head drive assembly with CPR
5	43880 (1600)	4	Torx® pan head screw
6	43658 (1600)	3	CPR guide
7	34805 (1600)	1	Extension spring
8	34806 (1600)	1	Tube
9	40497 (1600)	1	10-32 Keps nut
10	43879 (1600)	1	Torx® button head screw
11	2449 (1600)	1	Washer
12	44489 (1600)	4	Torx® screw
13	43338 (1600)	2	Label, CPR release
14	34418 (1600)	4	Compression spring
15	43317 (1600)	2	Button, CPR release
16	43320 (1600)	2	Mounting plate—CPR release
17	43319 (1600)	2	Top cover—CPR release
18	43360 (1600)	1	Cable assembly—CPR release
19	37232 (1600)	2	Hex nut
20	43318 (1600)	2	Handle—CPR release
21	43266 (1600)	2	Latch—CPR
22	37988 (1600)	2	Washer
23	19678 (1600)	6	Tru-arc ring
24	43659 (1600)	2	Head strap assembly
25	43361 (1600)	2	Slide—housing
26	18890 (1600)	2	Tru-arc ring
27	43746 (1600)	1	Clamp—CPR cable
28	43878 (1600)	2	Torx® button head screw
29	SA3351 (1600)	As required	Lithium grease
30	43355 (1600)	1	CPR housing assembly
31	43989 (1600)	4	Nylon washer

Item Number	Part Number	Quantity	Description
32	43267 (1600)	2	Lever—CPR
33	43371 (1600)	2	Spring—extension

a. Torx® is a registered trademark of Textron, Inc.

PPM Sensors (Beds with PPM System Only)

Figure 5-8. PPM Sensors (Beds with PPM System Only)

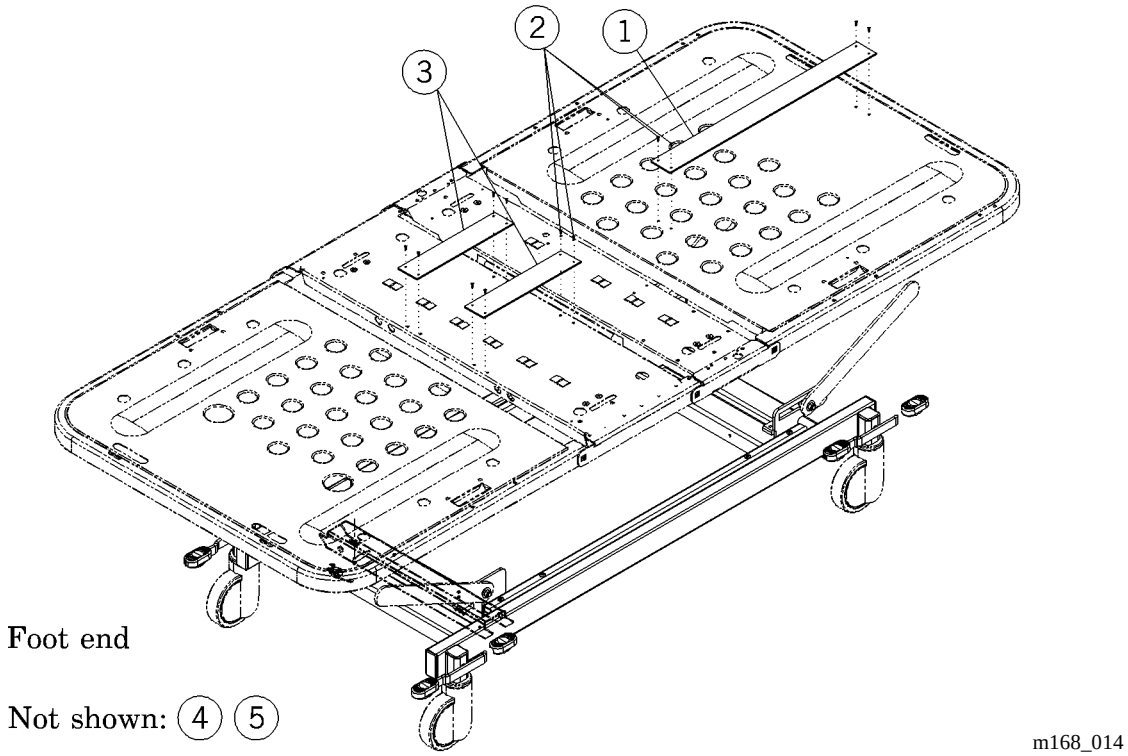

Table 5-8. PPM Sensors (Beds with PPM System Only)

Item Number	Part Number	Quantity	Description
1	6360801 (1600)	1	Bed exit sensor, large
2	36790 (1600)	12	Drive rivet
3	6360802 (1600)	2	Bed exit sensor, small
4	19124 (1600)	6	Large cable tie
5	37244 (1600)	2	Wire tie push mount

Air Surface Control Module—Mattress

Figure 5-9. Air Surface Control Module—Mattress

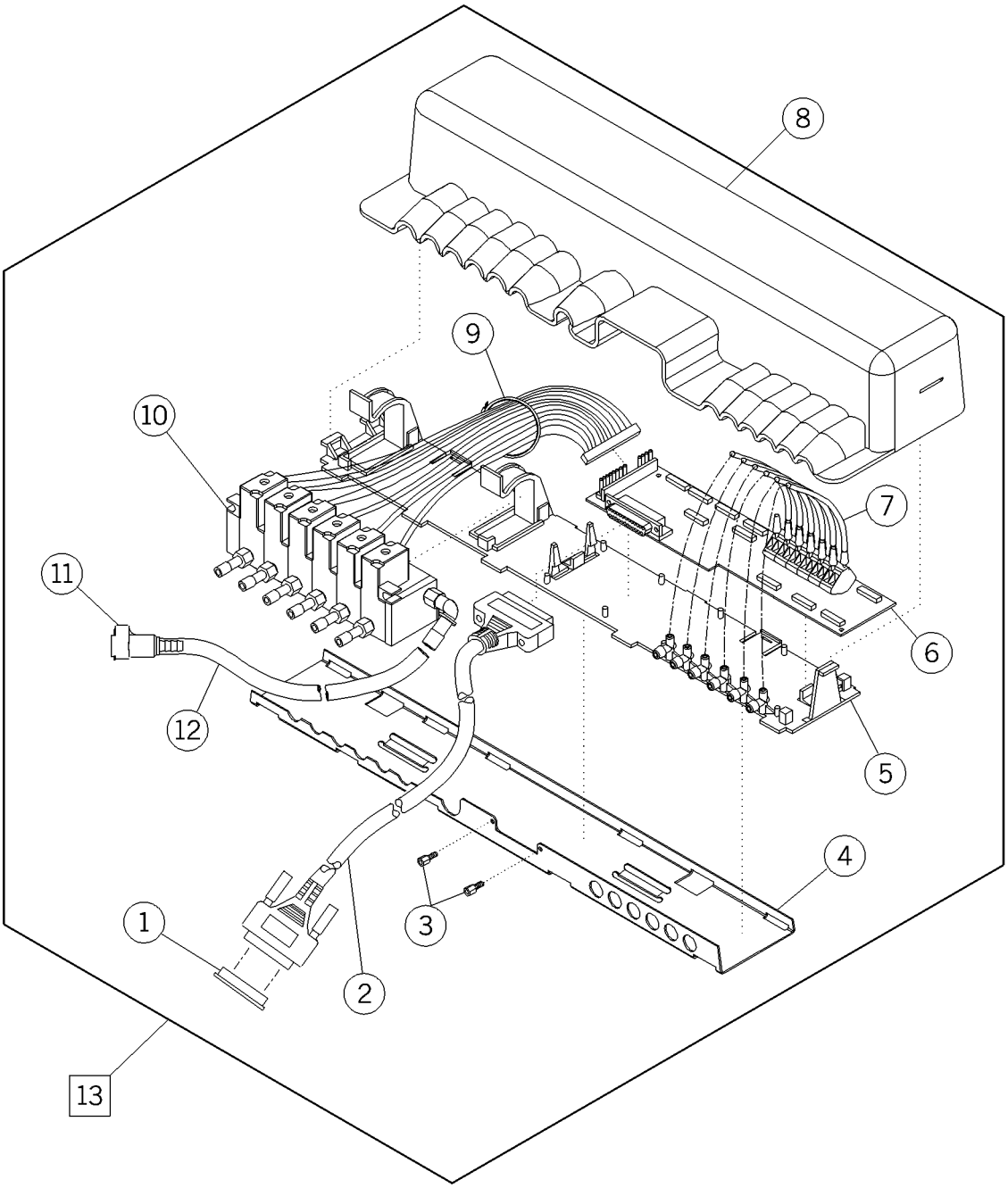

m168_047

Table 5-9. Air Surface Control Module—Mattress

Item Number	Part Number	Quantity	Description
1	45955 (1600)	1	Connector cover
2	45573 (1600)	1	Sensor cable—surface
3	42006 (1600)	2	Screw lock
4	47610 (1600)	1	Surface control base
5	45598 (1600)	1	Surface control frame
6	44740 (1600)	0 or 1	Sensor control P.C. board (ZoneAire® Sleep Surface beds)
7	45682 (1600)	6	Flex tubing (ZoneAire® Sleep Surface beds have 6)
8	45649 (1600)	1	Surface control cover
9	14450 (1600)	1	Small cable tie
10	45631 (1600)	0 or 1	Surface control valves (6 solenoids; ZoneAire® Sleep Surface beds)
11	45846 (1600)	1	Quick coupling—female
12	48756-06 (1600)	1	Urethane tubing
13	45679 (1600)	1	Surface control module (ZoneAire® Sleep Surface beds)

Air Surface Control Module—Frame

Figure 5-10. Air Surface Control Module—Frame

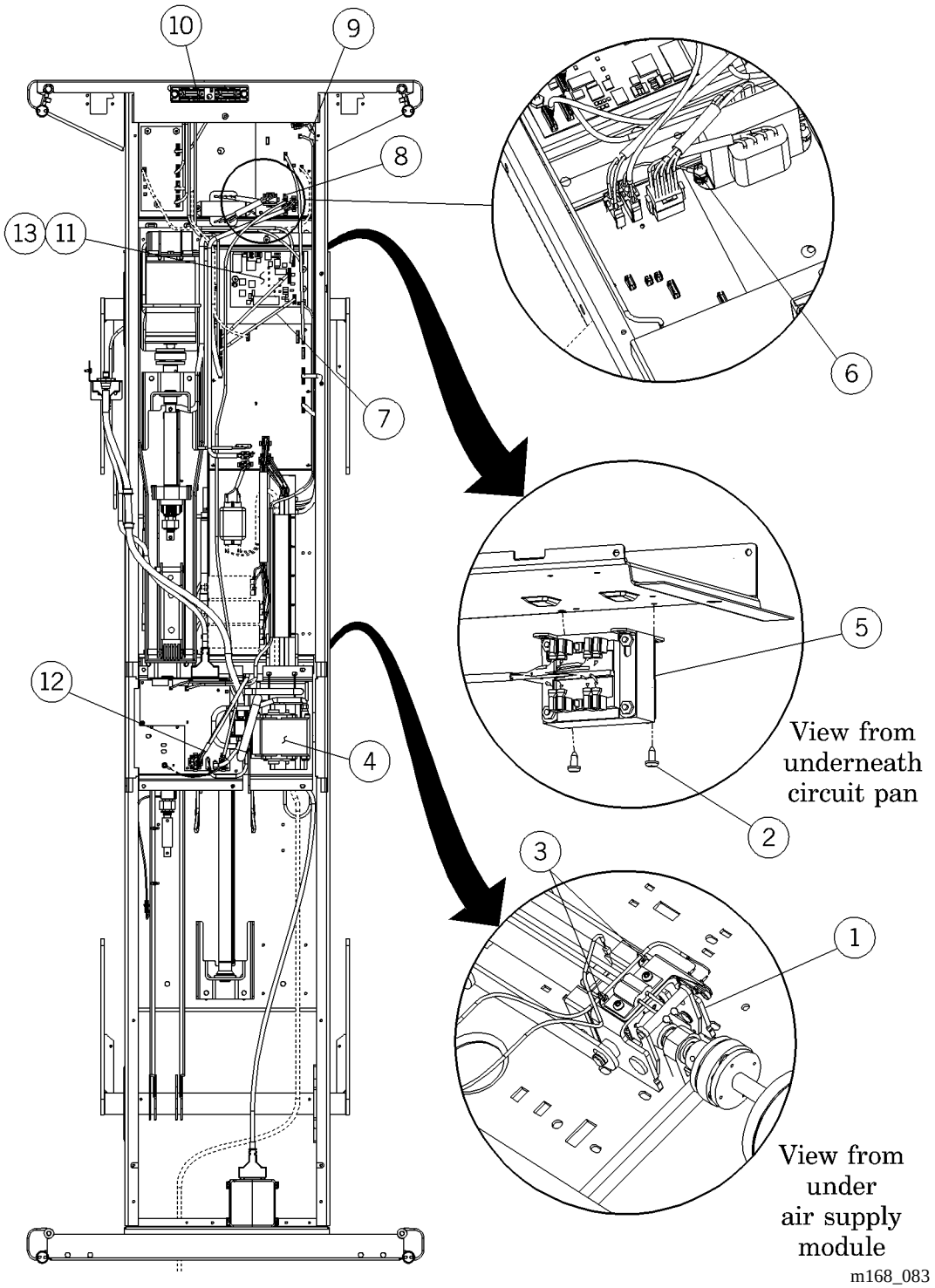

Table 5-10. Air Surface Control Module—Frame

Item Number	Part Number	Quantity	Description
1	45626 (1600)	1	CPR switch assembly
2	43878 (1600)	3	Torx®[a] button head screw
3	19124 (1600)	2	Large cable tie
4	64951 (1600)	1	Air supply module (see figure 5-11 on page 5-30)
5	4557501 (1600)	1	Transformer
6	40497 (1600)	2	Nut
7	49756 (1600)	1	Cable assembly, 8-connector
8	63730 (1600)	1	Cable
9	63279 (1600)	1	PCB, upper tier footboard, no air
10	64019 (1600)	1	Connector plate, bottom
11	6339601 (1600)	1	ZoneAire® interface board
12	63716 (1600)	1	Cable
13	63352 (1600)	1	Frame interface board

a. Torx® is a registered trademark of Textron, Inc.

5

Air Supply Module

Figure 5-11. Air Supply Module

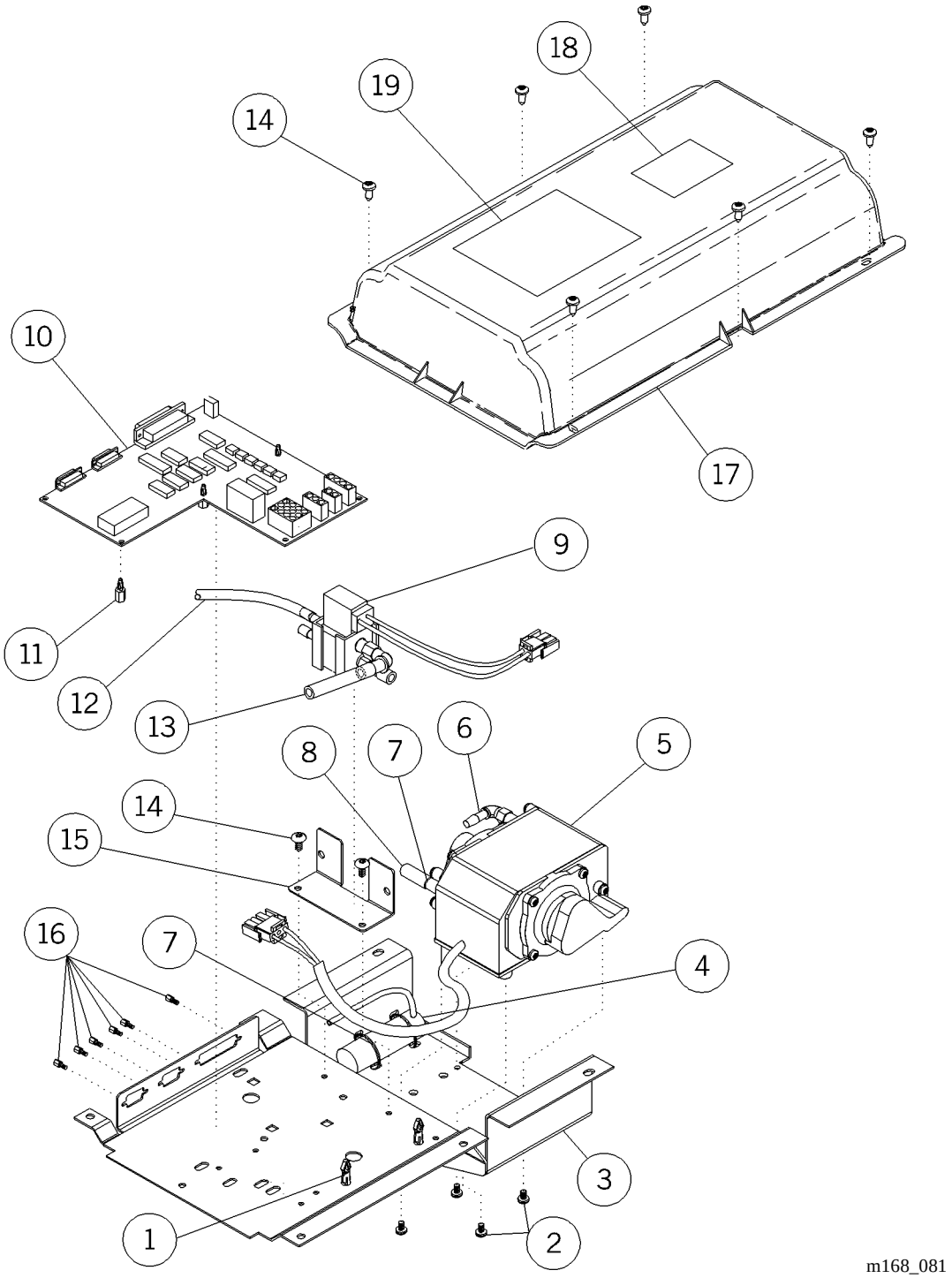

Table 5-11. Air Supply Module

Item Number	Part Number	Quantity	Description
1	39763-04 (1600)	2	Standoff
2	987 (1600)	4	Machine Screw
3	63909 (1600)	1	Air system weld - assembly
4	47103 (1600)	1	Muffler assembly
5	64095 (1600)	1	Linear air pump
6	64096 (1600)	1	Elbow fitting
7	19124 (1600)	3	Large cable tie
8	65240 (1600)	1	Air hose
9	47083 (1600)	1	Switching valve assembly
10	4476006 (1600)	1	P.C. board, air control
11	36973-03 (1600)	3	Standoff ½"
12	45681-01 (1600)	1	Urethane tubing
13	46980-12 (1600)	1	Hose
14	43878 (1600)	11	Torx®[a] button head screw
15	47023 (1600)	1	Switching valve bracket
16	42006 (1600)	6	Screw lock
17	38302-02(1600)	1	Air control cover
18	22247 (1600)	1	Label, caution
19	45852 (1600)	1	Label, resistor fuse

a. Torx® is a registered trademark of Textron, Inc.

5

Foot End Siderail

Figure 5-12. Foot End Siderail

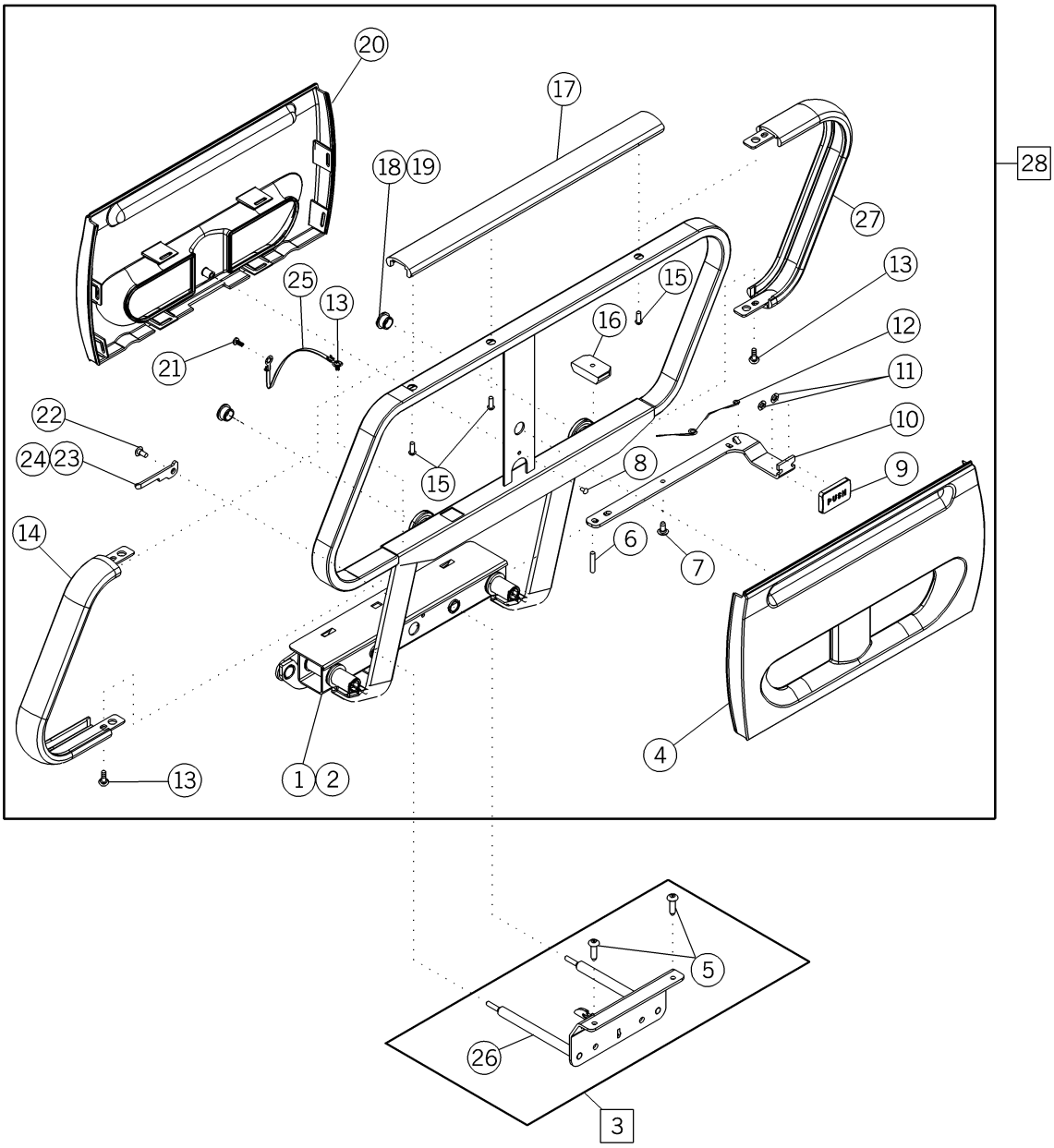

Note: Left-hand footrail assembly shown.

m168a012

Table 5-12. Foot End Siderail

Item Number	Part Number	Quantity	Description
1	6286001 (1600)	1	Siderail frame weldment, lh (lh footrail)
2	6286002 (1600)	1	Siderail frame weldment, rh (rh footrail)
3	23485 (1600)	2	Slide bracket assembly
4	62864 (1600)	2	Caregiver insert, foot siderail
5	43880 (1600)	4	Torx®[a] pan head screw
6	44328 (1600)	2	Spiral pin
7	37387 (1600)	2	Shoulder screw
8	6572701 (1600)	2	Screw
9	19562 (1600)	2	Latch cover
10	39412 (1600)	2	Release arm
11	17291 (1600)	4	Push nut
12	35261 (1600)	2	Spring
13	9003702H (1600)	6	Screw
14	6558101 (1600)	2	End cane
15	9018808 (1600)	6	Screw
16	26078 (1600)	2	Latch block
17	6323948 (1600)	2	Top cane, foot siderail
18	29457-48 (1600)	4	Hole plug
19	SA3351 (1600)	As required	Lithium grease
20	62863 (1600)	2	Patient insert, foot siderail
21	4759 (1600)	2	Screw
22	35072 (1600)	2	Shoulder screw
23	39714 (1600)	1	Key latch (lh footrail)
24	39713 (1600)	1	Key latch (rh footrail)
25	4565806 (1600)	2	Ground strap assembly
26	SA1672 (1600)	2	Slide bracket, screws
27	6558102 (1600)	2	End cane
28	66955-01 (1600) or 66955-02 (1600)	1 1	Foot end siderail assembly, left side Foot end siderail assembly, right side

a. Torx® is a registered trademark of Textron, Inc.

5

Left Head End Siderail

Figure 5-13. Left Head End Siderail

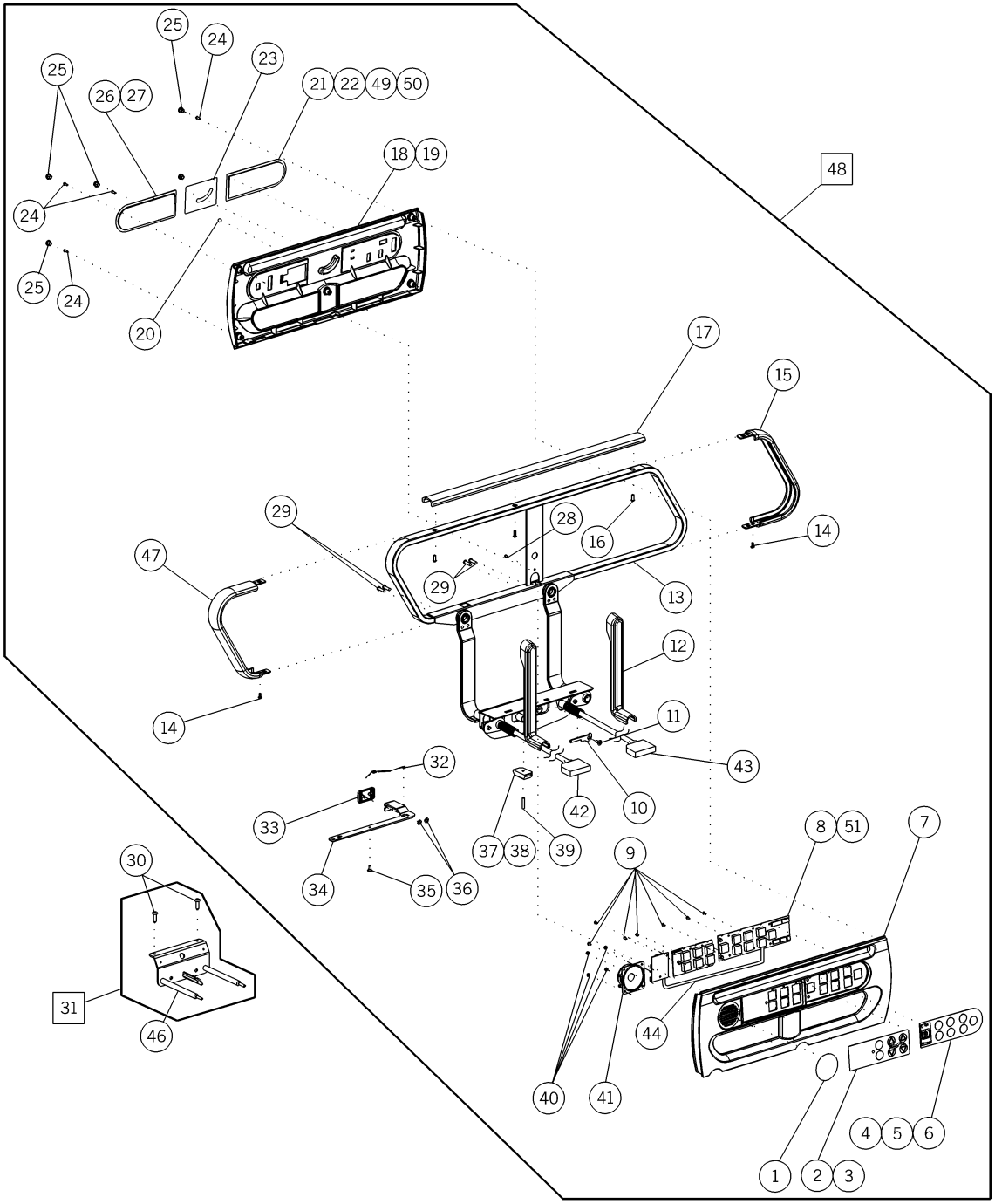

m168a020

Table 5-13. Left Head End Siderail

Item Number	Part Number	Quantity	Description
1	64538 (1600)	0 or 1	Label, blank speaker (beds without Side-Com® Communication System)
2	6343102 (1600)	0 or 1	Label, lighting and bed control—left (beds without lighting)
3	6343104 (1600)	0 or 1	Label, lighting and bed control—left (beds with lighting)
4	64548 (1600)	0 or 1	Label, blank (beds without SideCom® Communication System)
5	6343601 (1600)	0 or 1	Label, nurse call without entertainment, lh
6	6343602 (1600)	0 or 1	Label, nurse call with entertainment, lh (nurse call with lighting models only)
7	63426 (1600)	1	Patient control panel, lh
8	6321101 (1600)	1	Inner patient II assembly (beds with nurse call)
9	4214101 (1600)	4	Hilow screw
10	39714 (1600)	1	Key latch (lh)
11	35072 (1600)	1	Shoulder screw
12	19833-48 (1600)	2	Wire cover
13	6287301 (1600)	1	Siderail frame weldment, lh
14	9003702H (1600)	3	Screw
15	6558101 (1600)	1	End cane
16	9018808 (1600)	3	Screw
17	6323848 (1600)	1	Top cane, head siderail
18	6287201 (1600)	0 or 1	Caregiver control panel with bed exit (beds with PPM)
19	6287202 (1600)	0 or 1	Caregiver control panel without bed exit
20	47272 (1600)	1	Angle ball
21	63502 (1600)	0 or 1	Caregiver control, bed exit (A model beds with PPM)
22	6505001 (1600)	0 or 1	Label, Advanta™ Bed logo, lh
23	6343001 (1600)	1	Label, head elevation, lh
24	6572702 (1600)	5	Screw

Item Number	Part Number	Quantity	Description
25	63683 (1600)	5	Screw cover
26	6350101 (1600)	0 or 1	Caregiver switch assembly, lh with nurse call
27	6350102 (1600)	0 or 1	Caregiver switch assembly, lh without nurse call
28	6572701 (1600)	1	Screw
29	9016601 (1600)	4	Screw
30	43880 (1600)	2	Torx®[a] pan head screw
31	23485 (1600)	1	Slide bracket assembly
32	35261 (1600)	1	Spring
33	19562 (1600)	1	Latch cover
34	39412 (1600)	1	Release arm
35	37387 (1600)	1	Shoulder screw
36	17291 (1600)	2	Push nut
37	26078 (1600)	1	Latch block
38	SA3351 (1600)	As required	Lithium grease
39	44328 (1600)	1	Spiral pin
40	28562 (1600)	0 or 4	Palnut (beds with nurse call)
41	38873 (1600)	0 or 1	Speaker (beds with nurse call)
42	63601 (1600)	0 or 1	Cable assembly (beds with SideCom® Communication System)
43	63602 (1600)	1	Cable assembly
44	61604 (1600)	1	Cable assembly
45	63720 (1600)	0 or 1	Cable, bed exit siderail (beds with PPM only)
46	SA1672 (1600)	1	Slide bracket, screw
47	6558102 (1600)	1	End cane

Item Number	Part Number	Quantity	Description
48	6661701 (1600) or 6661703 (1600) or 6661705 (1600) or 6661707 (1600) or 6661709 (1600) or 6661711 (1600) or 6661713 (1600) or 6661715 (1600)	1 1 1 1 1 1 1 1	Headrail, LH, no SideCom® no bed exit (PPM) Headrail, LH, no SideCom®, with bed exit (PPM) (A model beds) Headrail, LH, nurse call, no bed exit (PPM) Headrail, LH, nurse call, with bed exit (PPM) (A model beds) Headrail, LH, nurse call, lighting, no bed exit (PPM) Headrail, LH, nurse call, lighting, with bed exit (PPM) (A model beds) Headrail, LH, nurse call, lighting, UTV, no bed exit (PPM) Headrail, LH, nurse call, lighting, UTV, bed exit (PPM) (A model beds)
49	67513 (1600)	0 or 1	Caregiver control, bed exit (beds with PPM) (B model beds)
50	6505003 (1600)	1	Label, blank (P1603 and P1604 model beds only)
51	6720301 (1600)	1	Inner patient II assembly (beds with PPM) (B model beds)

a. Torx® is a registered trademark of Textron, Inc.

5

Right Head End Siderail

Figure 5-14. Right Head End Siderail

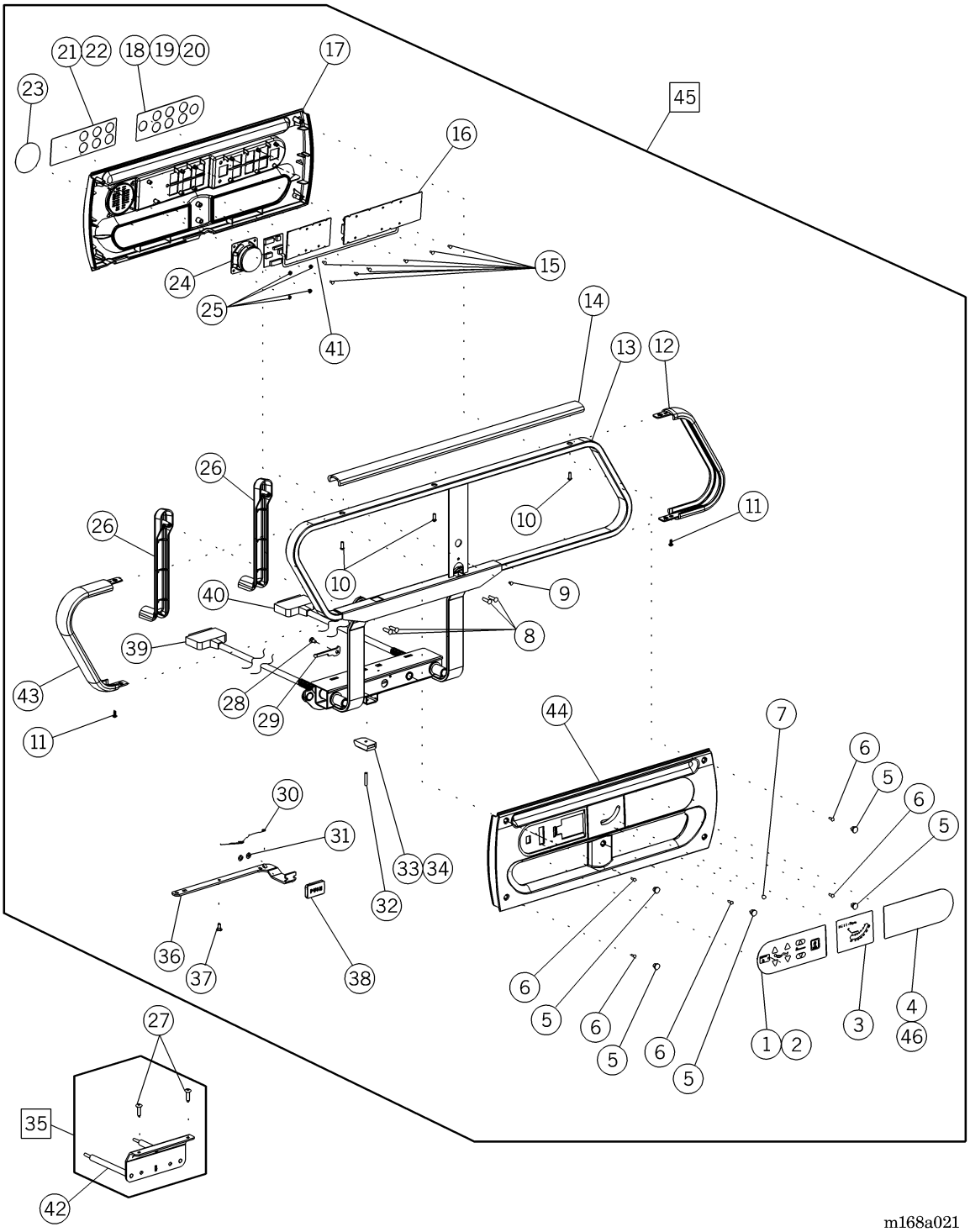

Table 5-14. Right Head End Siderail

Item Number	Part Number	Quantity	Description
1	6350002 (1600)	1	Caregiver switch assembly—rh without nurse call
2	6350001 (1600)	1	Caregiver switch assembly—rh (beds with nurse call)
3	6343002 (1600)	1	Label, head elevation, rh
4	6505002 (1600)	1	Label, Advanta™ Bed logo, rh
5	63683 (1600)	5	Screw cover
6	6572702 (1600)	5	Screw
7	47272 (1600)	1	Angle ball
8	9016601 (1600)	4	Screw
9	6572701 (1600)	1	Screw
10	9018808 (1600)	3	Screw, hilow
11	9003702H (1600)	3	Screw
12	6558101 (1600)	1	End cane
13	6287302 (1600)	1	Headrail frame weldment, rh
14	6323848 (1600)	1	Top cane, head siderail
15	4214101 (1600)	4	Hilow screw
16	6321101 (1600)	1	Inner patient II assembly (nurse call models only)
17	63427 (1600)	1	Patient control panel, rh
18	6343202 (1600)	0 or 1	Label, nurse call, entertainment—right (beds with nurse call and entertainment)
19	6343201 (1600)	0 or 1	Label, nurse call, no entertainment—right (beds with nurse call)
20	64548 (1600)	0 or 1	Label, blank (beds without nurse call or entertainment)
21	6343103 (1600)	0 or 1	Label, lighting and bed control—right (beds with lighting)
22	6343101 (1600)	0 or 1	Label, lighting and bed control—right (beds without lighting)
23	64538 (1600)	0 or 1	Label, blank speaker (beds without nurse call)
24	38873 (1600)	0 or 1	Speaker (beds with nurse call)

Item Number	Part Number	Quantity	Description
25	28562 (1600)	0 or 4	Palnut (beds with nurse call)
26	19833-48 (1600)	2	Wire cover
27	43880 (1600)	2	Torx®[a] pan head screw
28	35072 (1600)	1	Shoulder screw
29	39713 (1600)	1	Key latch (rh)
30	35261 (1600)	1	Spring
31	17291 (1600)	2	Push nut
32	44328 (1600)	1	Spiral pin
33	26078 (1600)	1	Latch block
34	SA3351 (1600)	As required	Lithium grease
35	23485 (1600)	1	Slide bracket assembly
36	39412 (1600)	1	Release arm
37	37387 (1600)	1	Shoulder screw
38	19562 (1600)	1	Latch cover
39	63601 (1600)	0 or 1	Cable assembly (beds with SideCom® Communication System)
40	63602 (1600)	1	Cable assembly
41	61604 (1600)	1	Cable assembly
42	SA1672 (1600)	1	Slide bracket, screws
43	6558102 (1600)	1	End cane
44	62871 (1600)	1	Caregiver control panel
45	6661702 (1600) or 6661704 (1600) or 6661706 (1600) or 6661708 (1600)	1 1 1 1	Headrail, RH, no SideCom®, no bed exit (PPM) Headrail, RH, nurse call Headrail, RH, nurse call, lighting Headrail, RH, nurse call, lighting, UTV
46	6505003 (1600)	1	Label, blank (P1603 and P1604 model beds)

a. Torx® is a registered trademark of Textron, Inc.

NOTES:

Communication J-Box

Figure 5-15. Communication J-Box

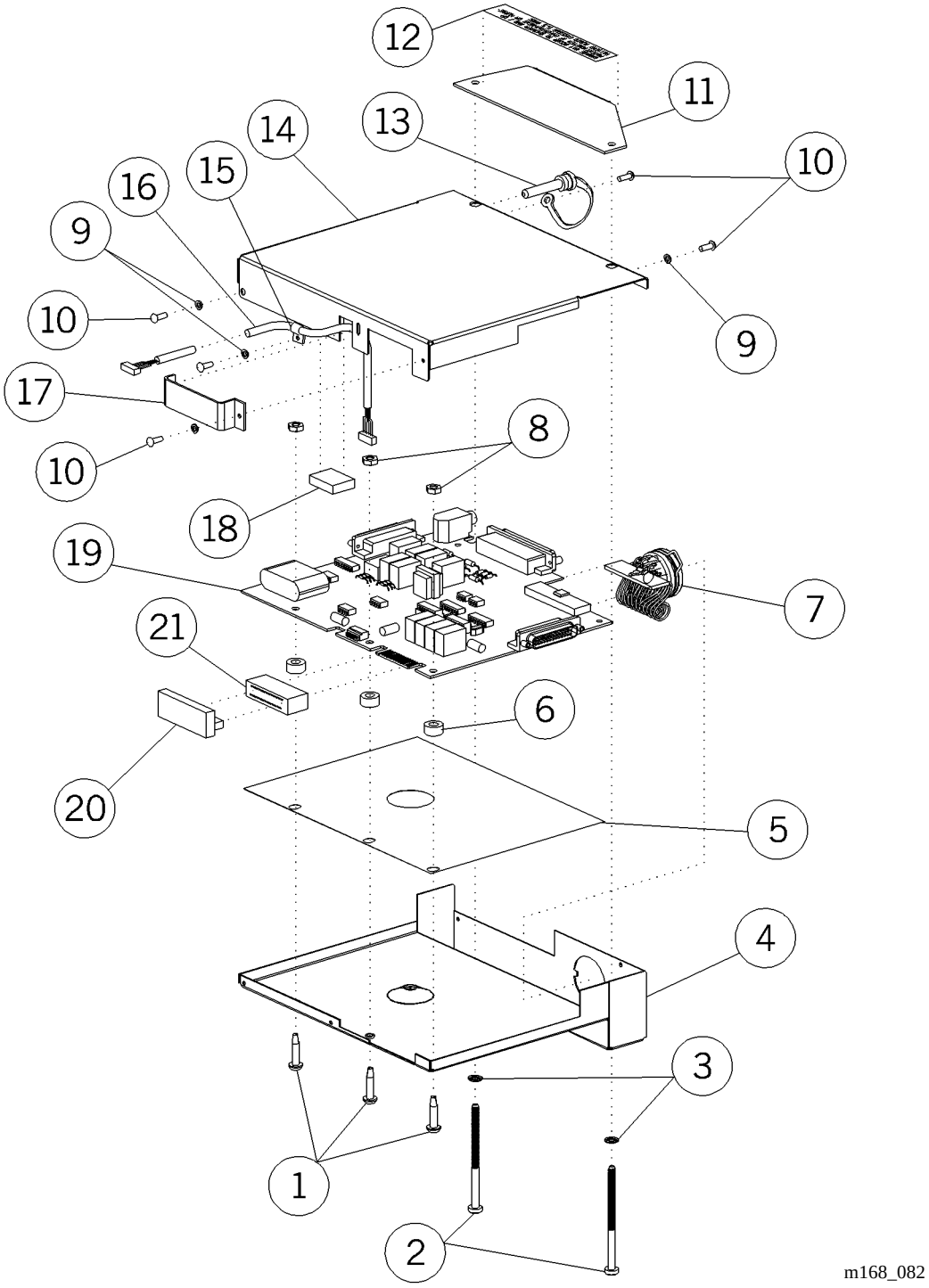

Table 5-15. Communication J-box

Item Number	Part Number	Quantity	Description
1	43879 (1600)	3	Torx®[a] button head screw
2	63746 (1660)	2	Screw
3	65302 (1660)	2	Lockwasher
4	62843 (1600)	1	UTV box bottom
5	64855 (1660)	1	UTV insulator
6	64986 (1660)	3	Spacer
7	63361 (1660)	1	UTV pendant interface cable
8	28837 (1600)	3	Nut, hex
9	31236 (1600)	5	Lockwasher
10	9023506 (1600)	5	Screw
11	63398 (1600)	1	UTV box protector
12	34778 (1600)	1	Label, caution
13	345121 (1600)	1	Dummy plug
14	62844 (1600)	1	UTV box top
15	29891 (1600)	1	Cable clamp
16	63726 (1600)	1	Entertainment power cable
17	65322 (1600)	1	J-box connector retainer
18	38260 (1600)	1	Foam tape
19	6493501 (1600)	1	Universal TV P.C. board assembly
20	4476709 (1600)*	0 or 1	TV module, UTV
21	45570 (1600)	0 or 1	Dummy connector

a. Torx® is a registered trademark of Textron, Inc.

* Before ordering, verify the part number on the part. Some beds without UTV have other modules.

5

Footboard—P1606

Figure 5-16. Footboard—P1606

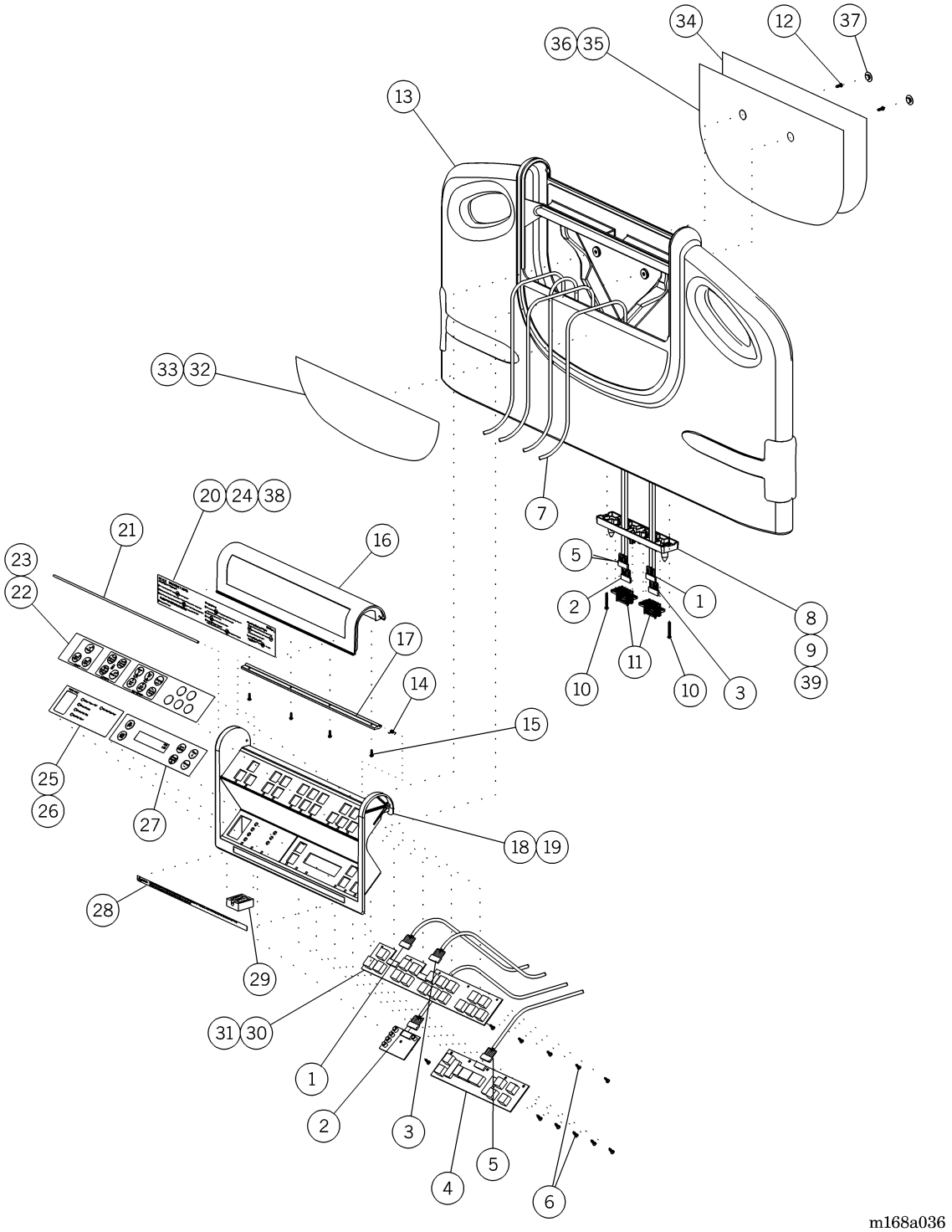

Table 5-16. Footboard—P1606

Item Number	Part Number	Quantity	Description
1	6371903 (1600)	1	Cable assembly (black)
2	6371902 (1600)	1	Cable assembly (red)
3	6371901 (1600)	1	Cable assembly (white)
4	63344 (1600)	0 or 1	Scale display assembly (beds with scales)
5	6371904 (1600)	1	Cable assembly (blue)
6	4214101 (1600)	8 or 13	Hilow screw (beds with scales have 13)
7	9000202 (1600)	6.6 lft	Tubing, blank
8	64018 (1600)	0 or 1	Top connector plate (beds with air surfaces)
9	63465 (1600)	0 or 1	Top connector plate (beds without air surfaces)
10	42141 (1600)	2	Screw
11	4937102 (1600)	2	Connector, 22-pin mini drawer
12	6572702 (1600)	2	Screw
13	66883 (1600)	1	Footboard shell assembly
14	64026 (1600)	1	Torsion spring
15	9019606 (1600)	4	Screw
16	62876 (1600)	1	Control panel door
17	63473 (1600)	1	Extrusion
18	62881 (1600)	0 or 1	Control panel, scale (beds with scales)
19	62878 (1600)	0 or 1	Control panel, without scale (beds without scales)
20	63493 (1600)	0 or 1	Label, scale instruction (beds with scales)
21	64180 (1600)	1	Hinge pin
22	6342903 (1600)	0 or 1	Label, footboard control (beds with ZoneAire® Sleep Surface)
23	6342901 (1600)	0 or 1	Label, footboard control (beds without air surfaces)
24	65069 (1600)	0 or 1	Label, Advanta™ Bed footboard (beds without scales)
25	6342801 (1600)	0 or 1	Label, Trendelenburg indicator, no air (beds without air surfaces)

Item Number	Part Number	Quantity	Description
26	6342803 (1600)	0 or 1	Label, Trendelenburg indicator (beds with ZoneAire® sleep surfaces)
27	62882 (1600)	0 or 1	Label, scale control (beds with scales)
28	4031001 (1600)	1	Label, caution
29	62246 (1600)	1	Trendelenburg indicator assembly
30	63280 (1600)	0 or 1	Assembly, upper tier, no air (beds without air surfaces)
31	63276 (1600)	0 or 1	Assembly, upper tier, with air (beds with air surfaces)
32	64256 (1600)	1	Adhesive, footboard
33	64257 (1600)*	1	HPL insert, footboard
34	64843 (1600)*	0 or 1	HPL insert, footboard
35	64534 (1600)	0 or 1	Adhesive, headboard
36	66345 (1600)	0 or 1	Footboard insert
37	3335801 (1600)	0 or 2	Plug
38	6342904 (1600)	0 or 1	Label, footboard control (P1603 and P1604 model beds)
39	67388 (1600)	0 or 1	Top connector plate (P1603 and P1604 model beds)

* Specify high pressure laminate color.

NOTES:

5

Head and Foot Hilow Drive Assembly

Figure 5-17. Head and Foot Hilow Drive Assembly

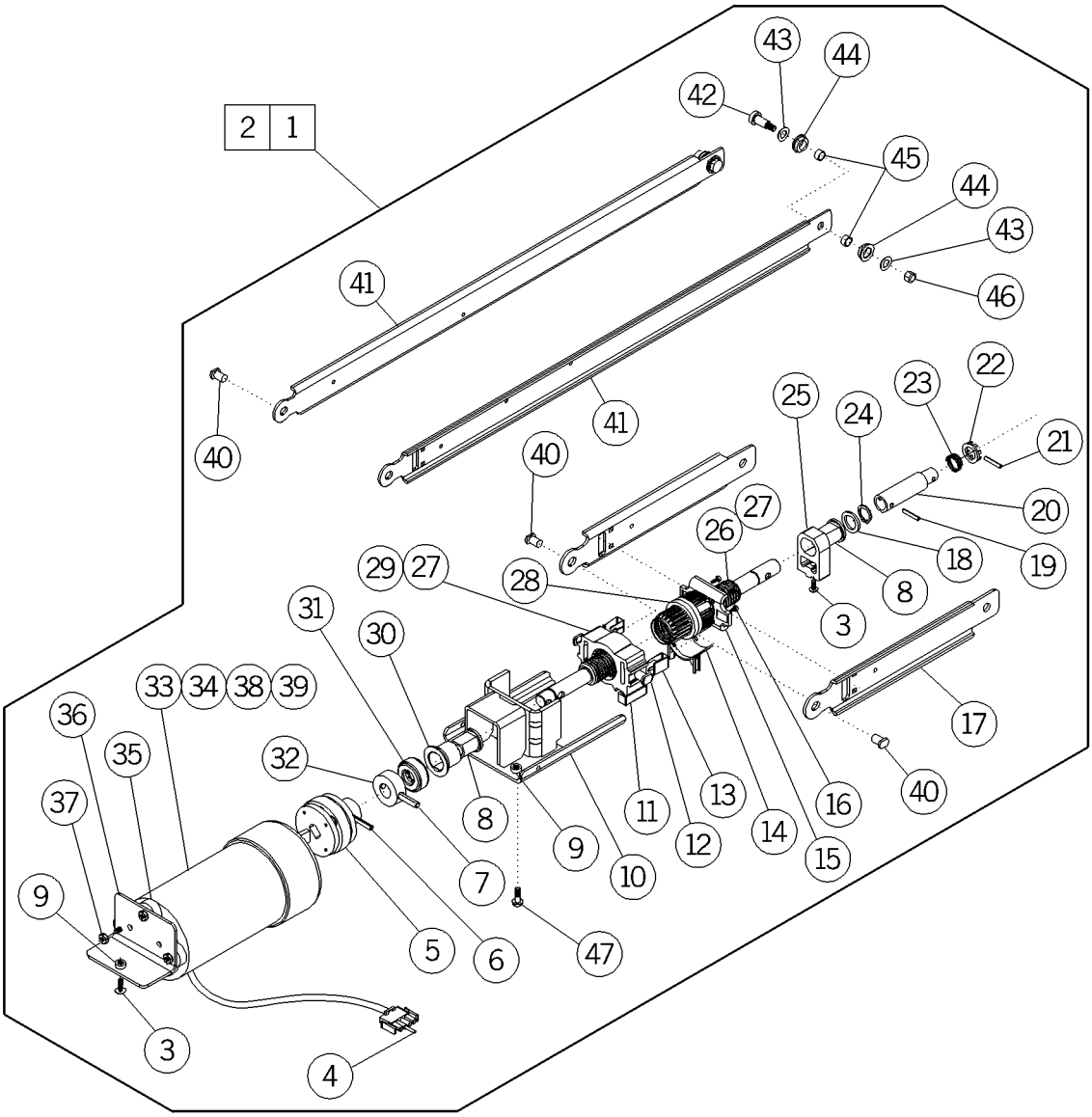

m168_044

Table 5-17. Head and Foot Hilow Drive Assembly

Item Number	Part Number	Quantity	Description
1	6200301 (1600)	1	Head hilow drive assembly
2	6200302 (1600)	1	Foot hilow drive assembly
3	43880 (1600)	2	Torx®[a] screw
4	43905 (1600)	0 or 1	Polarizing pin (foot hilow drive units)
5	36250 (1600)	1	Coupling assembly
6	3517 (1600)	1	Roll pin
7	64784 (1600)	1	Groove pin
8	42847 (1600)	2	Radial thrust bearing
9	63400 (1600)	3	U-nut
10	43887 (1600)	1	Thrust bracket weldment
11	43336 (1600)	2	Guide
12	42946 (1600)	0 or 2	Torque cage pin (foot hilow drive units)
13	43275 (1600)	0 or 2	Spring clip (foot hilow drive units)
14	61991 (1600)	1	Slide switch assembly
15	43334 (1600)	1	Hilow low limit
16	42141 (1600)	4	Hilow screw
17	43232 (1600)	0 or 2	Hilow strap—short (foot hilow drive units)
18	43132 (1600)	1	Washer
19	19636 (1600)	0 or 1	Slotted spring pin (head hilow drive units)
20	44168 (1600)	0 or 1	Screw extension (head hilow drive units)
21	19636 (1600)	1	Slotted spring pin
22	34864 (1600)	1	IV rod kickout washer
23	34951 (1600)	1	Spring
24	43133 (1600)	1	Retaining ring
25	42846 (1600)	1	Radial bracket
26	43273 (1600)	1	Drive screw
27	SA3351 (1600)	As required	Lithium base grease
28	42845 (1600)	1	Lift nut
29	42848 (1600)	1	Torque cage
30	42842 (1600)	1	Bearing end

Item Number	Part Number	Quantity	Description
31	43875 (1600)	1	Ball thrust bearing
32	42844 (1600)	1	Fixed end
33	43369 (1600)	0 or 1	Hilow motor 115V AC (foot hilow drive units)
34	44529 (1600)	0 or 1	Hilow motor 230V AC (foot hilow drive units)
35	40480 (1600)	3	Isolation mount
36	43107 (1600)	1	Rear motor bracket
37	40497 (1600)	3	10-32 Keps nut
38	4336901 (1600)	0 or 1	Hilow head motor (head hilow drive units)
39	4452901 (1600)	0 or 1	Hilow head motor 230V AC (head hilow drive units)
40	42946 (1600)	2	Torque cage pin
41	45749 (1600)	0 or 2	Hilow strap (head hilow drive units)
42	44815 (1600)	4	Shoulder bolt
43	41298 (1600)	8	Nylon washer
44	44265S (1600)	8	Bushing-double “D”
45	90263-04(1600)	8	Self lubricating bearing
46	60619 (1600)	4	Nut, nylock
47	43880 (1600)	4	Torx® pan head screw

a. Torx® is a registered trademark of Textron, Inc.

NOTES:

Head Drive Screw Assembly

Figure 5-18. Head Drive Screw Assembly

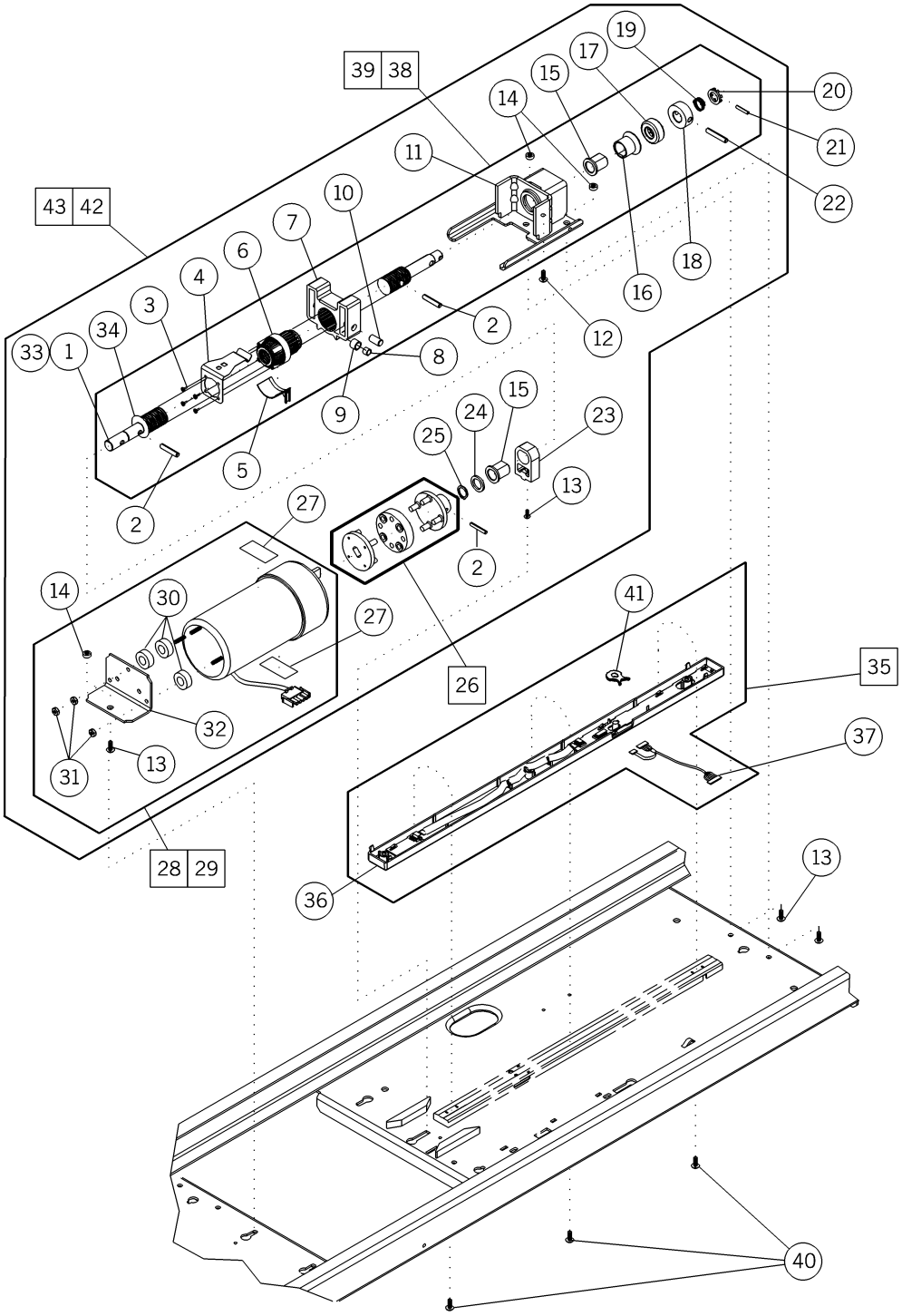

Table 5-18. Head Drive Screw Assembly

Item Number	Part Number	Quantity	Description
1	43272S (1600)	1	Head drive screw assembly
2	3517 (1600)	2	Roll pin
3	42141 (1600)	4	Hilow screw
4	66266S (1600)	1	Clip engagement
5	61991 (1600)	1	Slide switch assembly
6	42845 (1600)	1	Lift nut
7	43274 (1600)	1	Head torque cage
8	43279 (1600)	2	Needle bearing
9	43675 (1600)	2	Sleeve
10	43672 (1600)	2	Torque cage pin—head
11	43887 (1600)	1	Thrust bracket weldment
12	43878 (1600)	1	Torx®[a] button head screw
13	43880 (1600)	2	Torx® pan head screw
14	63400 (1600)	3	U-nut
15	42847 (1600)	2	Radial thrust bearing
16	42842 (1600)	1	Bearing end
17	43875 (1600)	1	Ball thrust bearing
18	42844 (1600)	1	Fixed end
19	34951 (1600)	1	Spring
20	34864 (1600)	1	Washer
21	19636 (1600)	1	Slotted spring pin
22	64784(1600)	1	Groove pin
23	42846 (1600)	1	Radial bracket
24	43132 (1600)	1	Washer
25	43133 (1600)	1	Retaining ring
26	36250 (1600)	1	Coupling assembly
27	34812 (1600)	2	Caution label
28	44530 (1600)	0 or 1	Head motor—230V AC
29	43370 (1600)	0 or 1	Head motor—115V AC
30	40480 (1600)	3	Isolation mount
31	40497 (1600)	3	10-32 Keps nut

Item Number	Part Number	Quantity	Description
32	43107 (1600)	1	Rear motor bracket
33	SA3351 (1600)	As required	Lithium grease
34	61996 (1600)	1	Washer, flat
35	64195 (1600)	1	Head drive limit assembly
36	61482 (1600)	1	Head housing
37	6148801 (1600)	1	Cable assembly, head limit
38	43272S (1600)	1	Head drive screw assembly
39	SA1663 (1600)	1	Head drive screw assembly
40	61997 (1600)	3	Torx® pan head screw
41	43387 (1600)	1	Auto contour cam
42	6200401 (1600)	0 or 1	Head screw assembly (without CPR)
43	6200402 (1600)	0 or 1	Head screw assembly (with CPR)

a. Torx® is a registered trademark of Textron, Inc.

NOTES:

Knee Drive Screw Assembly

Figure 5-19. Knee Drive Screw Assembly

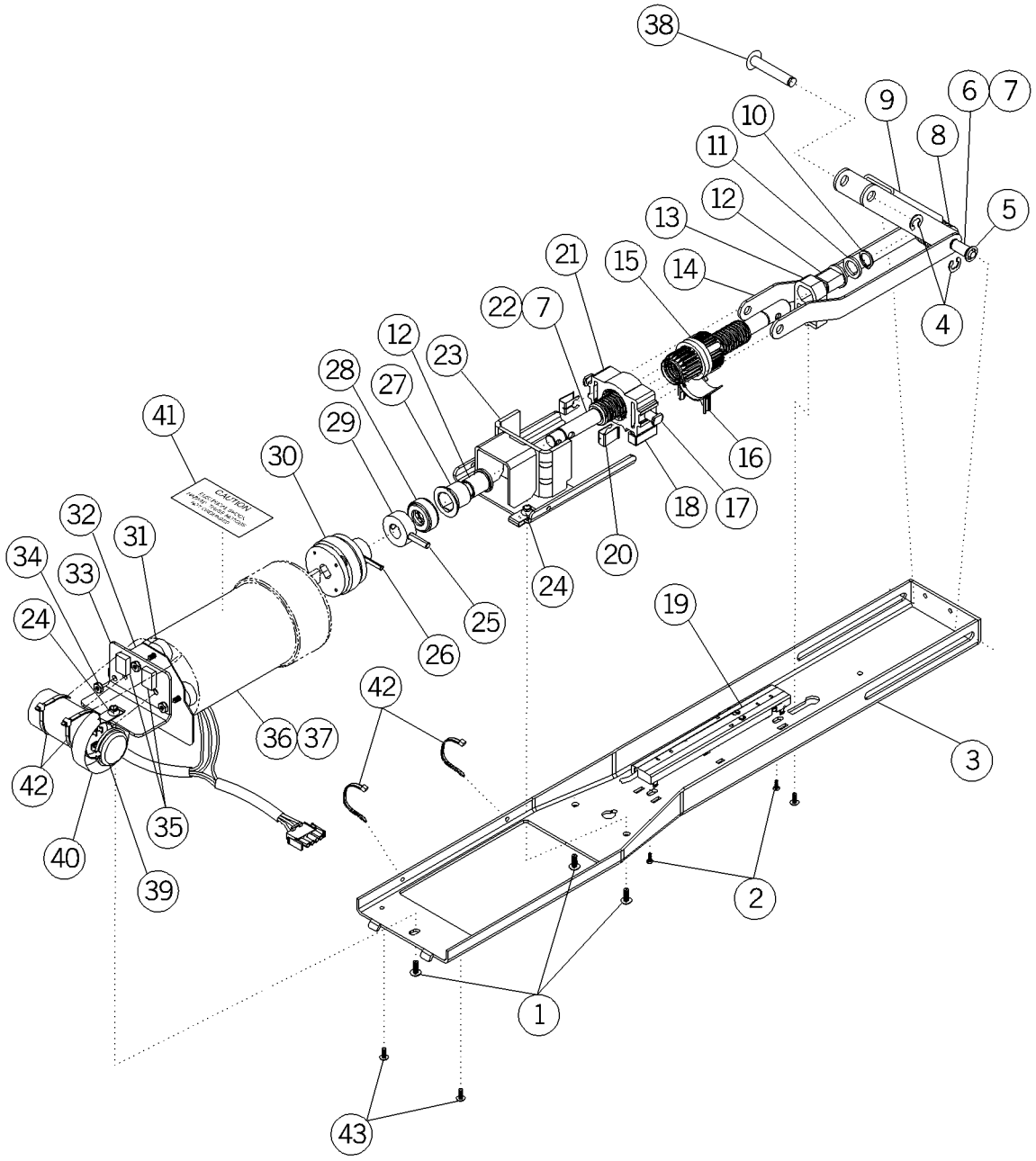

m168_045

Table 5-19. Knee Drive Screw Assembly

Item Number	Part Number	Quantity	Description
1	43880 (1600)	4	Torx®[a] pan head screw
2	61997 (1600)	2	Torx® pan head screw
3	43112 (1600)	1	Knee channel
4	35326 (1600)	2	E-ring
5	9525 (1600)	2	Washer
6	43322 (1600)	1	Axle
7	SA3351 (1600)	As required	Lithium grease
8	43108 (1600)	1	Roller
9	43110 (1600)	1	C-link
10	43133 (1600)	1	Retaining ring
11	43132 (1600)	1	Washer
12	42847 (1600)	2	Radial thrust bearing
13	42846 (1600)	1	Radial bracket
14	43109 (1600)	2	Link
15	42845 (1600)	1	Lift nut
16	61991 (1600)	1	Slide switch assembly
17	42946 (1600)	2	Torque cage pin
18	43336 (1600)	2	Guide
19	64194 (1600)	1	Knee drive limit assembly
20	43275 (1600)	2	Roll clip
21	42848 (1600)	1	Torque cage
22	43273 (1600)	1	Drive screw
23	43887 (1600)	1	Thrust bracket weldment assembly
24	63400 (1600)	3	U-nut
25	44380 (1600)	1	Groove pin
26	3517 (1600)	1	Spring pin
27	42842 (1600)	1	Bearing end
28	43875 (1600)	1	Ball thrust bearing
29	42844 (1600)	1	Fixed end
30	36250 (1600)	1	Coupling assembly
31	40480 (1600)	3	Isolation mount

Item Number	Part Number	Quantity	Description
32	43976 (1600)	1	Plastic barrier
33	43107 (1600)	1	Rear motor bracket
34	40497 (1600)	3	10-32 Keps nut
35	38260 (1600)	2	Foam tape
36	35000S (1600)	0 or 1	Universal motor assembly (115V AC)
37	4045901 (1600)	0 or 1	Motor (220/240V)
38	43141 (1600)	1	Pin
39	40523 (1600)	1	Cap
40	15942 (1600)	As required	Electrical tape
41	34812 (1600)	1	Caution label
42	19124 (1600)	4	Cable tie, large
43	43878 (1600)	2	Torx® button head screw

a. Torx® is a registered trademark of Textron, Inc.

NOTES:

COMposer® Interface Module

Figure 5-20. COMposer® Interface Module

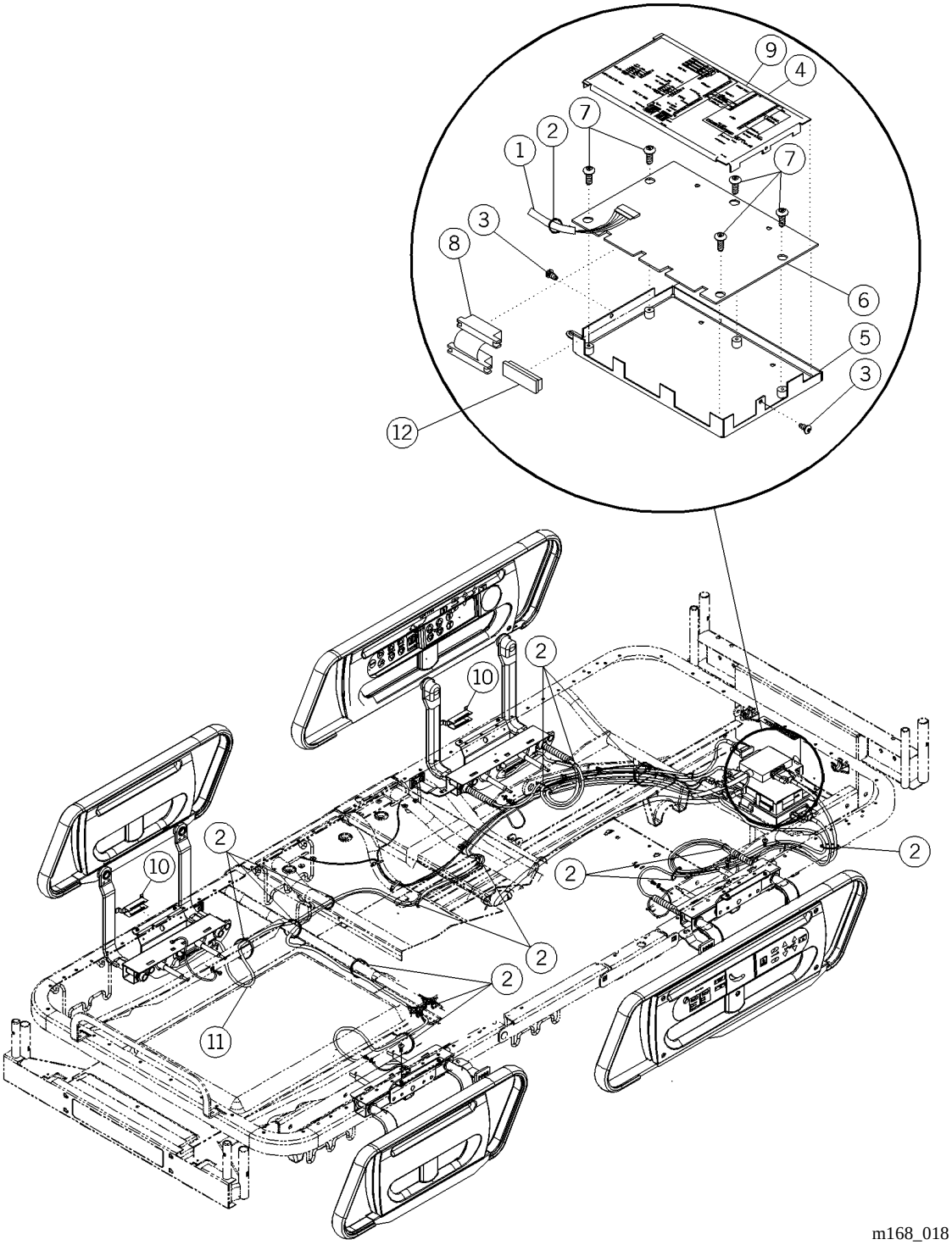

Table 5-20. COMposer® Interface Module

Item Number	Part Number	Quantity	Description
1	63710 (1600)	1	Cable, COMposer® interface board (CIB)/logic board
2	19124 (1600)	15	Large cable tie
3	393 (1600)	2	Screw
4	45085 (1600)	1	CIB box top
5	45772 (1600)	1	Interface box bottom assembly
6	63412 (1600)	1	PCB assembly, CIB
7	987 (1600)	5	Machine screw
8	4509701 (1600)	1	Cable assembly
9	65027 (1600)	1	Wiring diagram
10	45093 (1600)	4	Siderail switch bracket
11	45664 (1600)	1	Siderail switch cable assembly
12	4476709 (1600)	1	TV module UTV

Power Module

Figure 5-21. Power Module

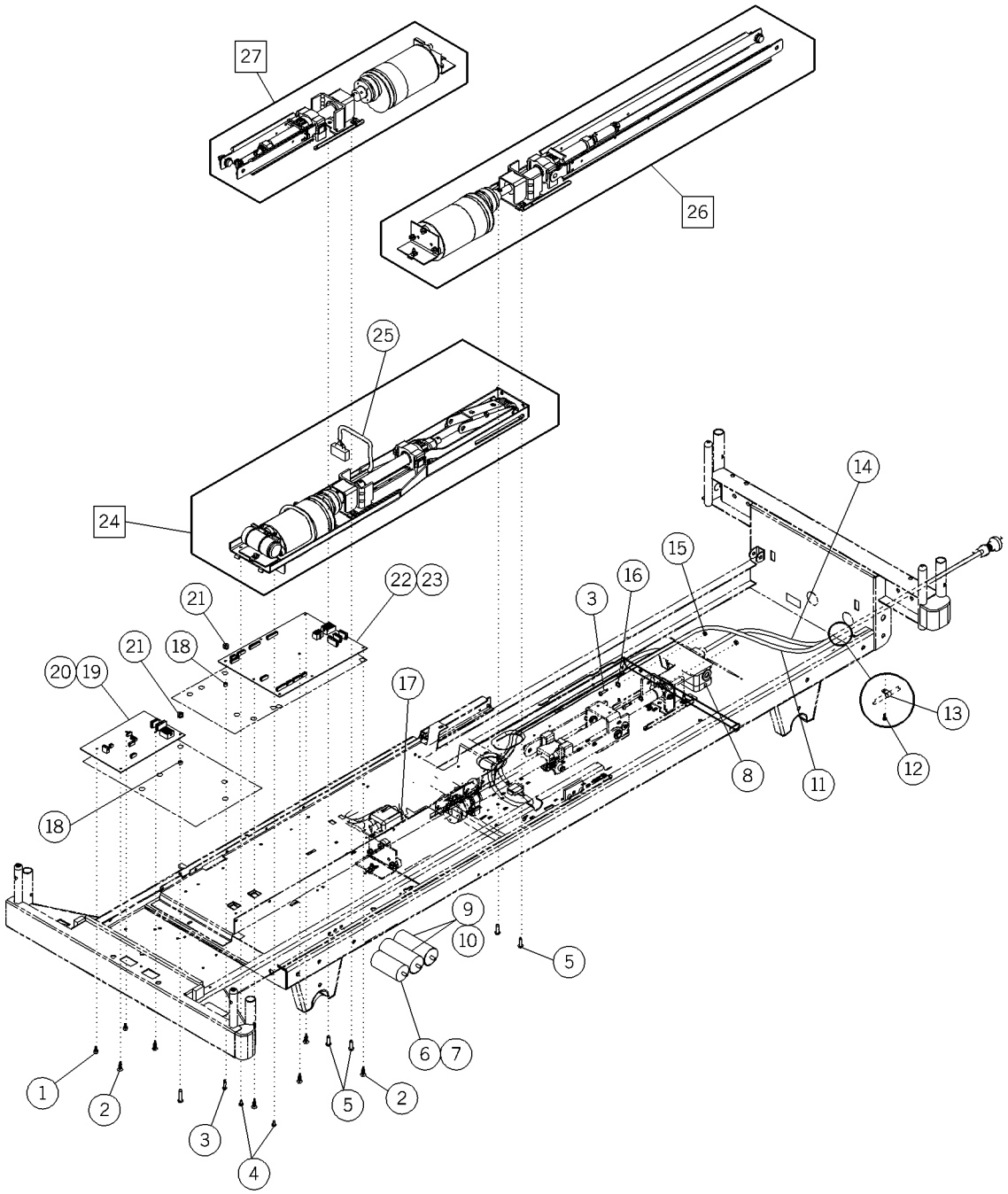

m168_022

Table 5-21. Power Module

Item Number	Part Number	Quantity	Description
1	3697301 (1600)	3	Board support
2	3976301 (1600)	9	Standoff
3	43879 (1600)	4	Torx®[a] button head screw
4	43878 (1600)	2	Torx® button head screw
5	43880 (1600)	4	Torx® pan head screw
6	41447 (1600)	1	Motor capacitor (115V AC)
7	43610 (1600)	1	Capacitor (230V AC)
8	65448 (1600)	1	Power cord, J-box assembly(230V AC)
9	43025 (1600)	2	Motor capacitor (115V AC)
10	4453201 (1600)	2	Capacitor, 7.5 UF, 6%, 440V AC, with stud (230V AC)
11	64017 (1600)	1	Power cord assembly (115V AC)
12	18252 (1600)	1	Screw
13	25200 (1600)	1	Speed clamp
14	6342201 (1600)	1	Power cord (110V AC)
15	28837 (1600)	2	Hex nut (230V AC)
16	15907 (1600)	4	Lockwasher (230V AC)
17	65387 (1600)	1	Carrier, power cable
18	44724 (1600)	2	Standoff spacer
19	6334901 (1600)	1	Power P.C. board assembly (120V AC)
20	6334902 (1600)	1	P.C. board assembly, power, 230V AC Advanta™ bed
21	40497 (1600)	2	10-32 Keps nut
22	63285 (1600)	1	DVM logic control assembly (115V AC)
23	6328501 (1600)	1	230V AC logic P.C. board
24	SA1672 (1600)	1	Knee drive screw assembly (see “Knee Drive Screw Assembly” on page 5-56)
25	63711 (1600)	1	Cable assembly, motor/capacitor (115V AC)
26	6200301 (1600)	1	Head hilow drive assembly (see “Head and Foot Hilow Drive Assembly” on page 5-48)

Item Number	Part Number	Quantity	Description
27	6200302 (1600)	1	Foot hilow drive assembly (see “Head and Foot Hilow Drive Assembly” on page 5-48)

a. Torx® is a registered trademark of Textron, Inc.

NOTES:

Electronics Module Assembly

Figure 5-22. Electronics Module Assembly

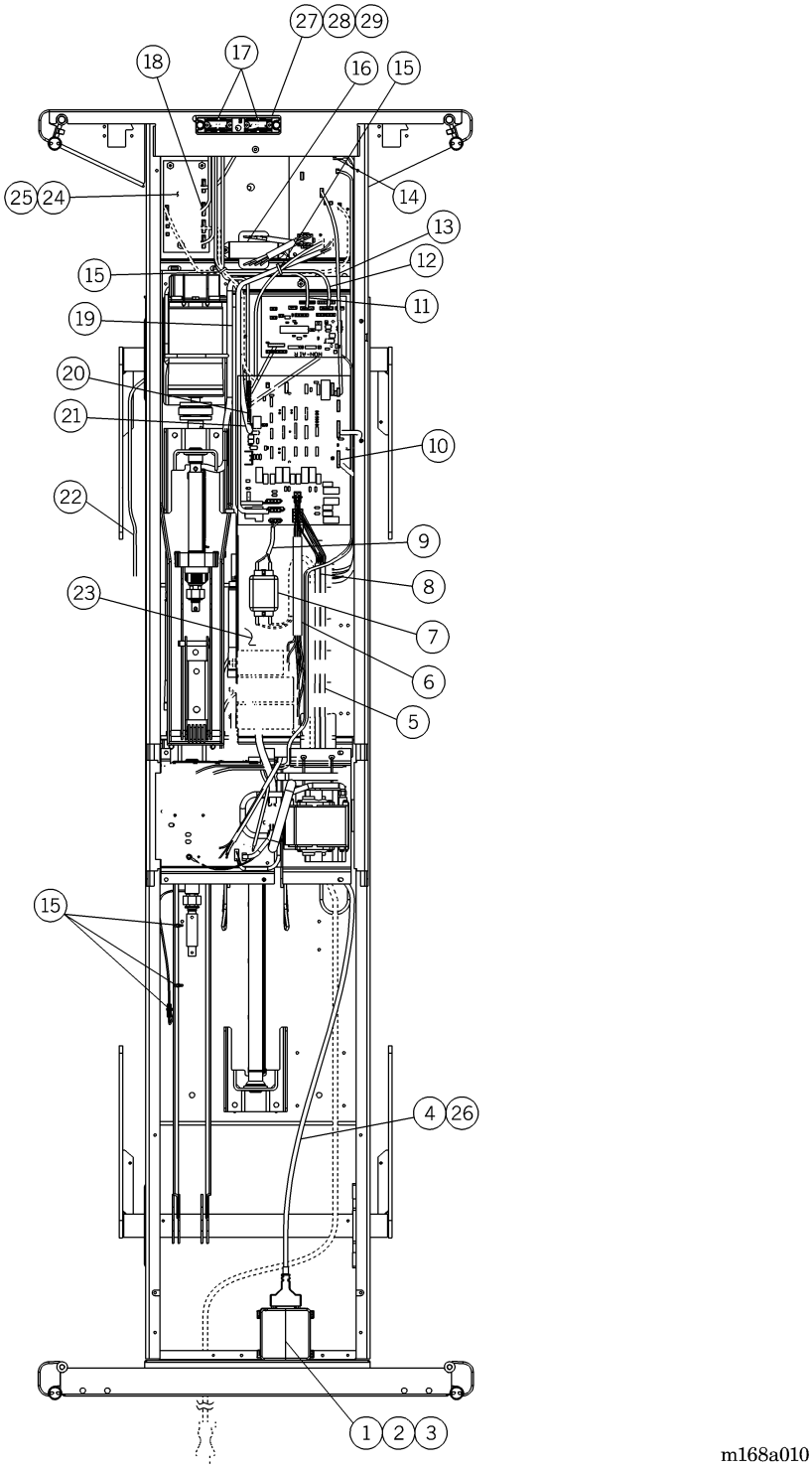

Table 5-22. Electronics Module Assembly

Item Number	Part Number	Quantity	Description
1	45916 (1600)	1	Test port lid
2	45915 (1600)	1	Test port box
3	63208 (1600)	1	P.C. board assembly, inner patient switch
4	63600 (1600)	1	Siderail interface cable (A model beds)
5	6010802 (1600)	1	Cable
6	64027 (1600)	1	Capacitor cable assembly
7	4143910 (1600)	1	Filter, power line
8	63717 (1600)	1	Motor interconnect cable
9	65339 (1600)	1	Noise filter cable
10	63718 (1600)	1	Limits interface cable
11	6371902 (1600)	1	Cable assembly (black)
12	6371901 (1600)	1	Cable assembly (white)
13	6148904 (1600)	1	Power interconnect cable
14	63728 (1600)	1	Cable assembly, lamp
15	19124 (1600)	15	Cable tie, large
16	64149 (1600)	1	Power transformer assembly
17	4937102 (1600)	2	Connector, 22-position
18	6372101 (1600)	1	Cable, bed exit to analog board
19	63715 (1600)	1	Power interconnect cable
20	6371902 (1600)	1	Cable assembly (red)
21	64194 (1600)	1	Knee drive limit assembly
22	6372102	1	Cable
23	63709 (1600)	1	Circuit board pan
24	63217 (1600)	1	P.C. board, bed exit (A model beds)
25	6321702 (1600)	1	P.C. board, bed exit (B model beds)
26	67504 (1600)	1	Siderail interface cable (B model beds)
27	64019 (1600)	0 or 1	Bottom connector plate (beds with ZoneAir® Sleep Surface)
28	63466 (1600)	0 or 1	Bottom connector plate (beds without ZoneAir® Sleep Surface)
29	67389 (1600)	0 or 1	Bottom connector plate (P1603 and P1604 model beds)

Headboard Assembly—P1605

Figure 5-23. Headboard Assembly—P1605

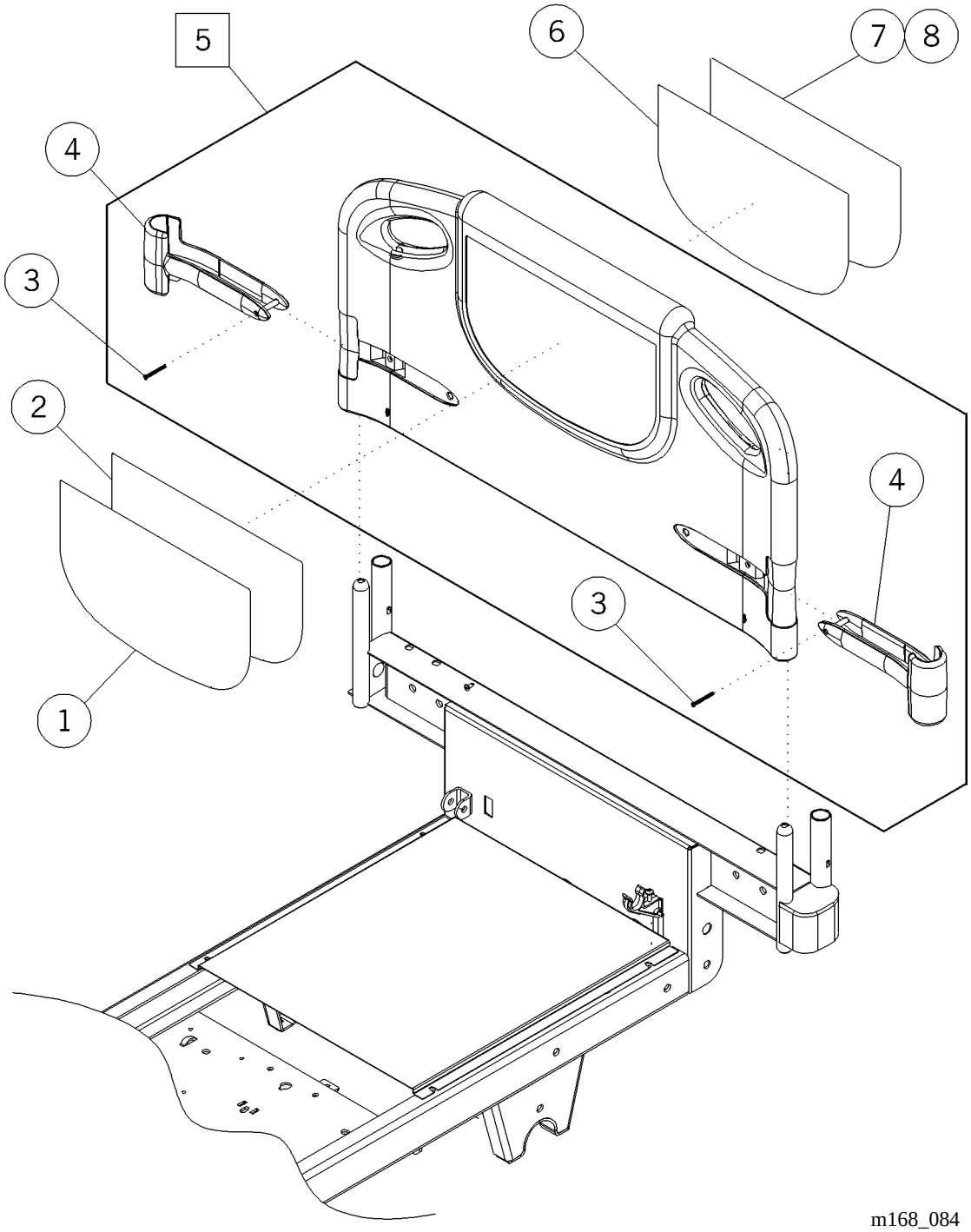

Table 5-23. Headboard Assembly—P1605

Item Number	Part Number	Quantity	Description
1	64535 (1600)*	1	HPL insert, headboard
2	64534 (1600)	1	Adhesive, headboard
3	63748 (1600)	2	Screw
4	63467 (1600)	2	Bumper
5	63606 (1600)	1	Headboard shell assembly
6	64254 (1600)	0 or 1	Adhesive, headboard
7	64255 (1600)*	0 or 1	HPL insert, headboard
8	66344 (1600)	0 or 1	Headboard insert

* Specify high pressure laminate color.

Accessory Outlet Module

Figure 5-24. Accessory Outlet Module

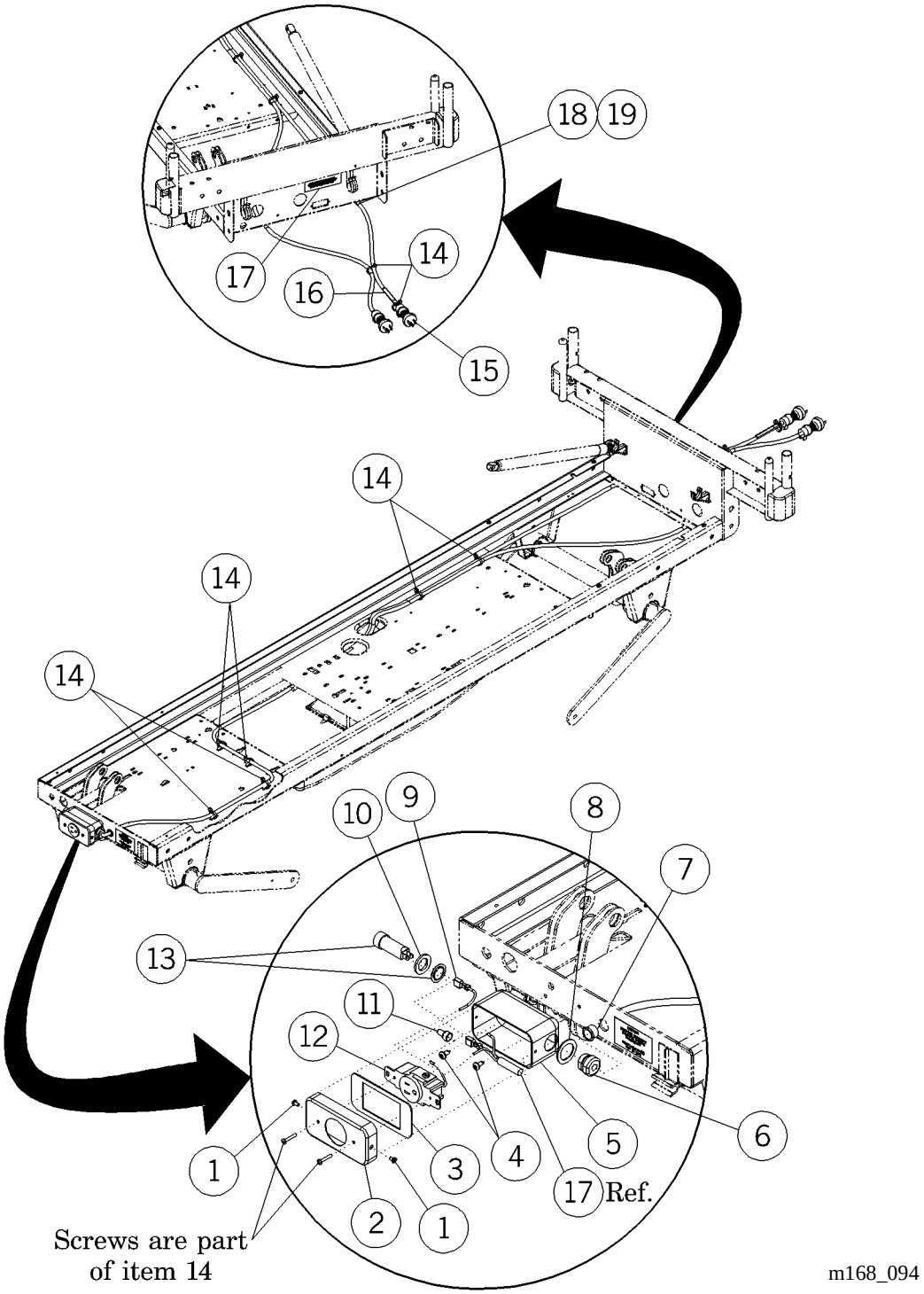

Table 5-24. Accessory Outlet Module

Item Number	Part Number	Quantity	Description
1	22605 (1600)	2	Screw
2	65451 (1600)	1	Outlet box cover
3	65452 (1600)	1	Gasket, outlet box
4	43878 (1600)	2	Torx®[a] button head screw
5	65450 (1600)	1	Outlet box
6	16145 (1600)	1	Strain relief
7	17410H (1600)	1	Insulating bushing
8	22320 (1600)	1	Gasket strain relief
9	66539 (1600)	1	Wire assembly, receptacle
10	35762 (1600)	1	Gasket
11	32741H (1600)	1	Wire joint
12	66537 (1600)	1	Outlet, single, 15A, orange
13	44507 (1600)	1	Circuit breaker, 8A
14	19124 (1600)	8	Large cable tie
15	66538 (1600)	1	Power cord, accessory outlet
16	66342 (1600)	1	Label power cord caution
17	62746 (1600)	1	Caution label
18	25200 (1600)	1	Speed clamp
19	4759 (1600)	1	Screw

a. Torx® is a registered trademark of Textron, Inc.

ZoneAire® Sleep Surface Mattress—P1410CA/P1410EA

Figure 5-25. ZoneAire® Sleep Surface Mattress—P1410CA/P1410EA

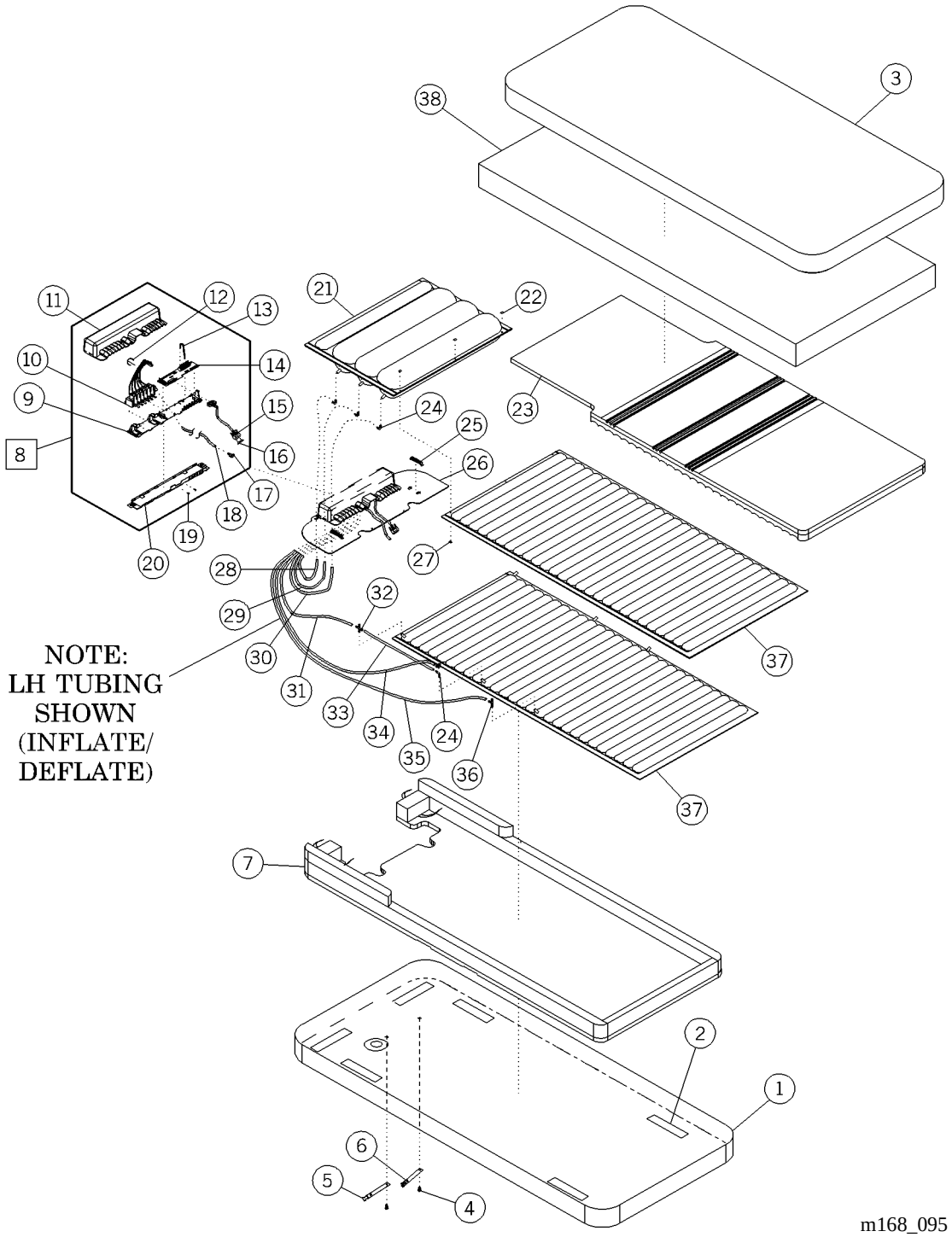

Table 5-25. ZoneAire® Sleep Surface Mattress—P1410CA/P1410EA

Item Number	Part Number	Quantity	Description
1	6132402 (1600)	1	Bottom cover
2	SA4589 (1600)	6	Magnet
3	6132102 (1600)	1	Top cover
4	SA7395 (1600)	2	Push rivet
5	SA7396 (1600)	1	Strap with buckle catch
6	SA7396 (1600)	1	Strap with buckle catch
7	Reference only	—	Bottom foam
8	45679 (1600)	1	Surface control module
9	45598 (1600)	1	Surface control frame
10	45631 (1600)	1	Surface control valves
11	45649 (1600)	1	Surface control cover
12	14450 (1600)	1	Small cable tie
13	45682 (1600)	6	Flex tubing
14	44740 (1600)	1	Sensor control board
15	45573 (1600)	1	Sensor cable—surface
16	45955 (1600)	1	Connector cover
17	45846 (1600)	1	Quick coupling—female
18	48756-06 (1600)	1	Urethane tubing
19	42006 (1600)	2	Screw lock
20	45640-PL (1600)	1	Surface control base
21	SA7399 (1600)	1	Heel bladder
22	SA7400 (1600)	3	Snap rivet—male
23	6215201 (1600)	1	Top foam assembly
24	SA7402 (1600)	10	Elbow connector
25	SA7403 (1600)	2	Tubing clamp
26	SA7404 (1600)	1	Locator plate
27	SA7405 (1600)	3	Snap rivet—female
28	SA7406 (1600)	2	Tubing heel bladder, zone 3—inflate/deflate (lh), sense (rh)
29	SA7407 (1600)	2	Tubing, heel bladder, zone 2—inflate/deflate (lh), sense (rh)

Item Number	Part Number	Quantity	Description
30	SA7408 (1600)	2	Tubing heel bladder, zone 1—inflate/deflate (lh), sense (rh)
31	SA7409 (1600)	2	Tubing, thigh section—inflate/deflate (lh), sense (rh)
32	SA7410 (1600)	2	Cross connector
33	SA7411 (1600)	2	Tubing, thigh/seat section, main bladder, lower—inflate/deflate (lh), sense (rh)
34	SA7412 (1600)	2	Tubing, seat section, main bladder, upper— inflate/deflate (lh), sense (rh)
35	SA7413 (1600)	2	Tubing, head section, main bladder —inflate/deflate (lh), sense (rh)
36	SA7414 (1600)	2	Tee connector
37	SA7415 (1600)	2	Main bladder, upper/lower
38	6132702 (1600)	1	Inner liner

NOTES:

Permanent IV Rod—P2221

Figure 5-26. Permanent IV Rod—P2221

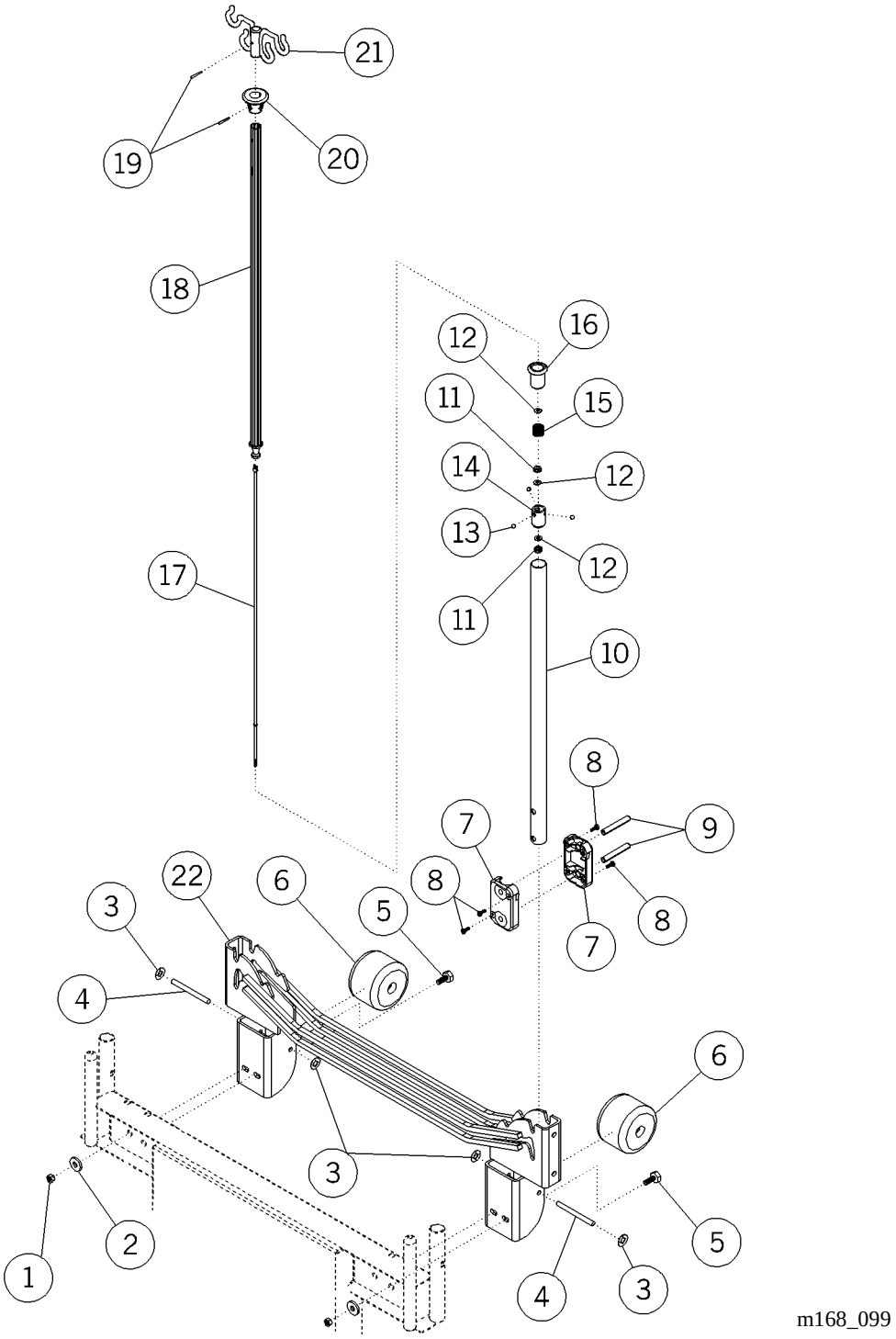

Table 5-26. Permanent IV Rod—P2221

Item Number	Part Number	Quantity	Description
1	831 (1600)	2	Locknut
2	19918 (1600)	2	Washer
3	25210 (1600)	4	Push nut
4	25208 (1600)	2	Axle
5	90016-10 (1600)	2	Bolt
6	34557 (1600)	2	Roller bumper
7	44386 (1600)	2	Base sleeve
8	43389 (1600)	4	Hilow Torx®[a] screw
9	44397-PL (1600)	2	Solid knurled pin
10	44387-PL (1600)	1	Base pipe
11	33680 (1600)	2	Keps nut
12	2449 (1600)	3	Washer
13	44393 (1600)	3	Roller ball
14	44383 (1600)	1	Ball retainer
15	34418 (1600)	1	Compression spring
16	44396 (1600)	1	I.V. bearing
17	44390 (1600)	1	Plunger
18	44400-PL (1600)	1	Upper tube weldment
19	18162 (1600)	2	Roll pin
20	44389 (1600)	1	I.V. release
21	49144 (1600)	1	I.V. hook
22	44385-48 (1600)	1	IV mounting weldment

a. Torx® is a registered trademark of Textron, Inc.

NOTES:

Chapter 6
General Procedures

Chapter Contents

6

NOTES:

6.1 Scale Calibration

Tools required: None

NOTE:
The scale calibration weight must be between 100 lb to 250 lb (45 kg to 113 kg). The software does not allow the user to key in weights outside of this range.

1. Lower the bed to the lowest position.

2. Raise the bed approximately 4" (10 cm).

3. Press and hold the *Zero 000.0* switch until the display stops flashing 000.0 (see figure 6-1 on page 6-3).

Figure 6-1. Scale

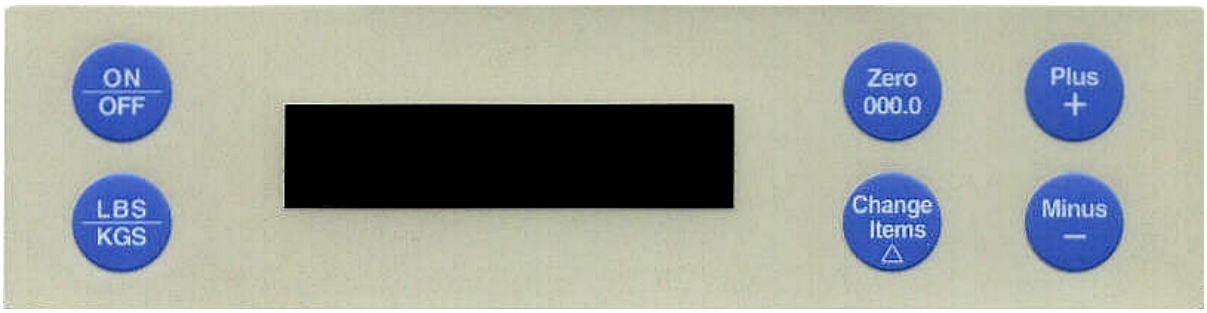

m168_134

4. Continue holding the *Zero 000.0* switch, and press and hold the *Change Items* switch for 5 s.

5. Release the *Zero 000.0* switch, and continue holding the *Change Items* switch for another 5 s.

6. Release the *Change Items* switch.

6

NOTE:
The display reads CAL0, indicating that the bed is zeroing.

7. Avoid touching the bed.

NOTE:
When the display reads CAL1, the bed is zeroed.

8. When one tone sounds, add the calibration weight to the left foot section.
9. Wait approximately 30 s. The display reads CAL2.
10. When two tones sound, remove the calibration weight from the left foot section.
11. Wait approximately 30 s. The display reads CAL3.
12. When three tones sound, add the calibration weight to the left head section.
13. Wait approxiately 30 s. The display reads CAL4.
14. When four tones sound, remove the calibration weight from the left head section.
15. Wait approximately 30 s. The display reads CAL5.
16. When five tones sound, add the calibration weight to the right head section.
17. Wait approximately 30 s. The display reads CAL6.
18. When six tones sound, remove the calibration weight from the right head section.
19. Wait approximately 30 s. The display reads CAL7.
20. When seven tones sound, add the calibration weight to the right foot section.
21. Wait approximately 30 s. The display reads 100.0, and one tone sounds.
22. Use the *Plus* + and *Minus* - switches to adjust the weight up and down to the calibration weight.
23. When the correct weight is displayed, press and release the *Change Items* switch.

NOTE:
One tone sounds, and the current weight appears on the display.

Cleaning

SHOCK HAZARD:
Follow the product manufacturer's instructions. Failure to do so could result in personal injury or equipment damage.

SHOCK HAZARD:
Unplug the unit from its power source. Failure to do so could result in personal injury or equipment damage.

SHOCK HAZARD:
Do not expose the unit to excessive moisture that would allow for liquid pooling. Personal injury or equipment damage could occur.

CAUTION:
Do not use harsh cleansers/detergents, such as scouring pads and heavy duty grease removers, or solvents, such as toluene, xylene, and acetone. Equipment damage could occur.

CAUTION:
Ensure that the metal platform is dry before placing the mattress back onto the bed. Failure to do so could result in equipment damage.

If there is no visible soilage with possible body fluids, we recommend that you clean the unit with a mild detergent and warm water. If disinfection is desired, you may use a combination cleanser/disinfectant as explained in "Disinfecting" on page 6-6.

In either case, ensure that the metal platform is dry before placing the mattress back onto the bed.

Steam Cleaning

Do not use any steam cleaning device on the unit. Excessive moisture can damage mechanisms in this unit.

Cleaning Hard to Clean Spots

To remove difficult spots or stains, we recommend that you use standard household cleansers and a soft-bristled brush. To loosen heavy, dried-on soil, you may first need to saturate the spot.

Disinfecting

When there is visible soilage and between patients, we recommend that you disinfect the unit with a tuberculocidal disinfectant. (For customers in the US, the disinfectant should be registered with the Environmental Protection Agency.)

Dilute the disinfectant according to the manufacturer's instructions.

Component Handling

CAUTION:
To prevent component damage, ensure that your hands are clean and **only** handle the P.C. boards by their edges.

CAUTION:
When handling electronic components, wear an antistatic strap . Failure to do so, could result in component damage.

CAUTION:
For shipping and storage, place the removed P.C. board in an anti-static protective bag. Equipment damage can occur.

P.C. Boards

When servicing P.C. boards, follow good handling practices . Mishandling can cause the following:

- P.C. boards damage
- Shortened P.C. board life
- Unit malfunctions

Observe the following P.C. board handling rules:

- Ensure that hands are clean and free of moisture, oily liquids, etc.
- **Only** handle the P.C. boards by its outer edges.
- Do not touch the P.C. board components. Finger contact with the board surface and/or with its components can leave a deposit which will result in board (and component) deterioration.
- When working with electronics, wear an appropriate antistatic strap, and ensure it is properly grounded .
- Service the removed P.C. boards at a static-free workstation that is properly grounded.
- For shipping and storage, place the removed P.C. boards in an antistatic protective bag.

Lubrication Requirements

WARNING:
Follow the product manufacturer's instructions. Failure to do so could result in personal injury or equipment damage.

CAUTION:
Do not use silicone-based lubricants. Equipment damage could occur.

Oilite®[1] bearings and bushings are utilized in several places on the system. By retaining oil, the pores give a self-lubricating quality to the bearings and bushings. If any silicone-based lubricant is applied to the bearings and bushings or anywhere else on the system, this self-lubricating quality is neutralized.

It is safe to apply the following lubricants to the system (see table 6-1 on page 6-7):

Table 6-1. Lubricants

Part Number	Description
8252	2 oz m-1 oil (apply to the Oilite® bearings and bushings)

1. Oilite® is a registered trademark of Beemer Precision, Incorporated.

Part Number	Description
SA3351	4 oz lithium grease
SA3352	Gear grease (small tube—use on motor gears only)
SA0646	Teflon®[a] spray lubricant (dry) (aerosol spray can—use anywhere else the bed needs lubrication)

a. Teflon® is a registered trademark of E. I. du Pont and de Nemours and Company.

Preventive Maintenance

WARNING:
Only facility-authorized personnel should perform preventive maintenance on the Advanta™ Bed. Preventive maintenance performed by unauthorized personnel could result in personal injury or equipment damage.

The Advanta™ Bed requires an effective maintenance program. We recommend that you perform annual preventive maintenance (PM) and testing for Joint Commission on Accreditation of Healthcare Organizations (JCAHO). PM and testing not only meet JCAHO requirements but will help to ensure a long, operative life for the Advanta™ Bed. PM will minimize downtime due to excessive wear.

The following PM schedule guides you through a normal PM procedure on the Advanta™ Bed. During this PM process, check each item on the schedule, and make the necessary adjustments.

Follow the PM schedule with the corresponding PM checklist. This checklist is designed to keep a running maintenance history and subsequent repair costs for one Advanta™ Bed. However, your facility can modify this checklist or design another to fit your needs. Two effective ways to reduce downtime and ensure the patient remains comfortable are keeping close records and maintaining the Advanta™ Bed.

Preventive Maintenance Schedule

Table 6-2. Preventive Maintenance Schedule

Function	Procedure
Head limits	Run the head section to the full upper and lower limits to ensure proper function of the limit switches.
Knee limits	Run the knee section to the full upper and lower limits to ensure proper function of the limit switches.
Hilow limits	Run the bed to the full upper and lower limits to ensure proper function of both head and foot hilow drive limit switches.
Contour limit	Run the head section up to ensure that the knee section rises to 15° to form a contour position.
Trendelenburg limits	Run the bed into both the Trendelenburg and Reverse Trendelenburg positions to check the limits. Check the degree indicator for accuracy.
Head drive screw	Inspect, clean, and lubricate the head drive screw with red lithium grease. Inspect the sliding head cover on the upper frame assembly. Inspect the clip engagement, torque cage, and lift nut. Ensure that they are in proper working order.
Knee drive screw	Inspect, clean, and lubricate the knee drive screw with red lithium grease.
Hilow head drive screw	Inspect, clean, and lubricate the hilow head drive screw with red lithium grease.
Hilow foot drive screw	Inspect, clean, and lubricate the hilow foot drive screw with red lithium grease.
Motor capacitors	Check the capacitors to ensure that they still work.
Siderail controls	Test the siderail switches for proper operation. Check for momentary operation of the switches.
PPM (Bed exit)	Ensure the PPM system works properly in all modes and that it places the appropriate call when activated. Replace worn or defective sensors if needed.
Communications	Inspect and test the communication junction box. Test the SideCom® Communication System features for proper operation. Inspect the communication cable including the male and female pins in the plug. Test the Nurse Call super capacitor for proper operation.

Function	Procedure
Siderail frame	Test the siderail for proper latching.
Pivot points	Lubricate all pivot points on the bed.
CPR release	Test the CPR release for proper operation and reset of the head screw drive. Adjust the CPR release if necessary (see “CPR Release Handle” on page 4-79).
Night light	Check the night light to ensure that it functions properly. If required, adjust the sensitivity with a screwdriver at the right side foot end of the retracting frame assembly.
Central brake and steer	Test the brake casters to determine if the bed moves when you activate the brake mode. Test the steer mode to determine if the foot end casters lock in the steer mode.
Caster tires	Check the tires for cuts, wear, tread life, etc.
Power cord and plug	Inspect the power cord and plug for cuts, nicks, or breaks.
Head and foot panels	Check the aesthetics.
Overall appearance	Check the general aesthetics of the bed. Touch up the paint where necessary. Inspect the labels, and replace as necessary.
Electrical test	Test the bed for electrical leakage. Ground resistance must be less than 0.20 ohms. Leakage current must be less than 65 microamps for 115 volt models, and less than 90 micro amps for 230 volt models.
Footboard control panel	Test all the bed function switches in the nurse control panel for proper operation of the function and momentary operation. Test all of the lockout switches individually for proper operation.
LED indicators	Check all of the LEDs on the footboard to ensure proper operation.
Bed scale	Check the accuracy of the bed scale with different weights. Test for proper operation of the scale functions and adjustments.
ZoneAire® Sleep Surface	Check the mattress and air bladders for punctures, cuts, or tears. Inspect the air compressor unit. Check all of the hose connections (to the mattress and inside the mattress) and O-ring to prevent air leaks. Check each zone for function. Check all switches and the CPR release.

Preventive Maintenance Checklist

Table 6-3. Preventive Maintenance Checklist

Date																							Function
Hill-Rom	**Manufacturer**																						Head limits
																							Knee limits
																							Hilow limits
																							Contour limit
																							Trendelenburg limits
																							Head drive screw
																							Knee drive screw
																							Hilow head drive screw
	Model Number																						Hilow foot drive screw
																							Motor capacitors
																							Siderail controls
																							PPM (Bed exit)
																							Communications
																							Siderail frame
																							Pivot points
																							CPR release
	Serial Number																						Night light
																							Central brake and steer
																							Caster tires
																							Power cord and plug
																							Head and foot panels
																							Overall appearance
																							Electrical test
																							Footboard control panel
																							LED indicators
																							Bed scale
																							ZoneAire® Sleep Surface
	Total Cost for This Page																						**Labor Time:**
																							Repair Cost:
																							Inspected By:
																							Legend L=Lube C=Clean A=Adjust R=Repair or Replace O=Okay N=Not Applicable Remarks:

Preventive Maintenance—ZoneAire® Sleep Surface

WARNING:
Only facility-authorized personnel should perform preventive maintenance on the ZoneAire® Sleep Surface. Preventive maintenance performed by unauthorized personnel could result in personal injury or equipment damage.

The ZoneAire® Sleep Surface requires an effective maintenance program. We recommend that you perform annual preventive maintenance (PM) and testing for Joint Commission on Accreditation of Healthcare Organizations (JCAHO). PM and testing not only meet JCAHO requirements but will help to ensure a long, operative life for the ZoneAire® Sleep Surface. PM will minimize downtime due to excessive wear.

The following PM schedule guides a technician through a normal PM procedure on the ZoneAire® Sleep Surface. During this PM process, check each item on the schedule, and make the necessary adjustments.

Follow the PM schedule with the corresponding PM checklist. This checklist is designed to keep a running maintenance history and subsequent repair costs for one ZoneAire® Sleep Surface. However, your facility can modify this checklist or design another to fit your needs. Two effective ways to reduce downtime and ensure the patient remains comfortable are keeping close records and maintaining the ZoneAire® Sleep Surface.

Preventive Maintenance Schedule—ZoneAire® Sleep Surface

Table 6-4. Preventive Maintenance Schedule—ZoneAire® Sleep Surface

Function	Procedure
Footboard control panel	Test all of the bed function switches for proper operation. Test the lockout switches individually for proper operation. Check the switch LEDs and the LED information indicators for proper operation.
Air compressor	Inspect the compressor unit air hoses for punctures, cuts, or tears.
Sleep surface	Check the air bladders for punctures, cuts, or tears. Check all the hose connections to the mattress and O-rings to see if they have dried out. Check mattress cover for punctures, cuts or cracks. Replace if needed.
Functional check	Check each bladder zone for correct function. Check the CPR release.
Overall appearance	Check the general aesthetics of the ZoneAire® Sleep Surface.

Preventive Maintenance Checklist—ZoneAire® Sleep Surface

Table 6-5. Preventive Maintenance Checklist—ZoneAire® Sleep Surface

Date																							**Function**
Hill-Rom	**Manufacturer**																						Footboard control panel
																							Air compressor
																							Sleep surface
																							Function check
																							Overall appearance
	Model Number																						
	Serial Number																						
	Total Cost for This Page																						**Labor Time:**
																							Repair Cost:
																							Inspected By:
																							Legend L=Lube C=Clean A=Adjust R=Repair or Replace O=Okay N=Not Applicable Remarks:

6

Tool and Supply Requirements

To service the Advanta™ Bed, the following tools and supplies are required:

- 1/8" punch
- 11/32" open end wrench
- 13/16" open end wrench
- Hammer
- Phillips head screwdriver
- Small wire cutters
- Torque wrench (250 in-lb capacity) with 1/4" Allen™[1] adapter and 1/2" socket
- T45 Torx®[2] head screwdriver
- 3/16" nut driver
- 3/8" nut driver
- 5/32" Allen™ wrench
- Screwdriver
- 1/4" Allen™ wrench
- Pliers
- 1/2" wrench
- Adjustable wrench
- Jack stands
- Feeler gauge
- Loctite®[3] (P/N SA7110)
- Extraction tool (P/N 429022)

The extraction tool is used for servicing the wiring cable connectors (see figure 6-2 on page 6-17). For information on ordering the tool, see “Service Parts Ordering” on page 5-5.

1. Allen™ is a trademark of Industrial Fasteners, Inc.
2. Torx® is a registered trademark of Textron, Inc.
3. Loctite® is a registered trademark of Loctite Corporation.

Figure 6-2. Extraction Tool Used to Service Wiring Cables and Connectors

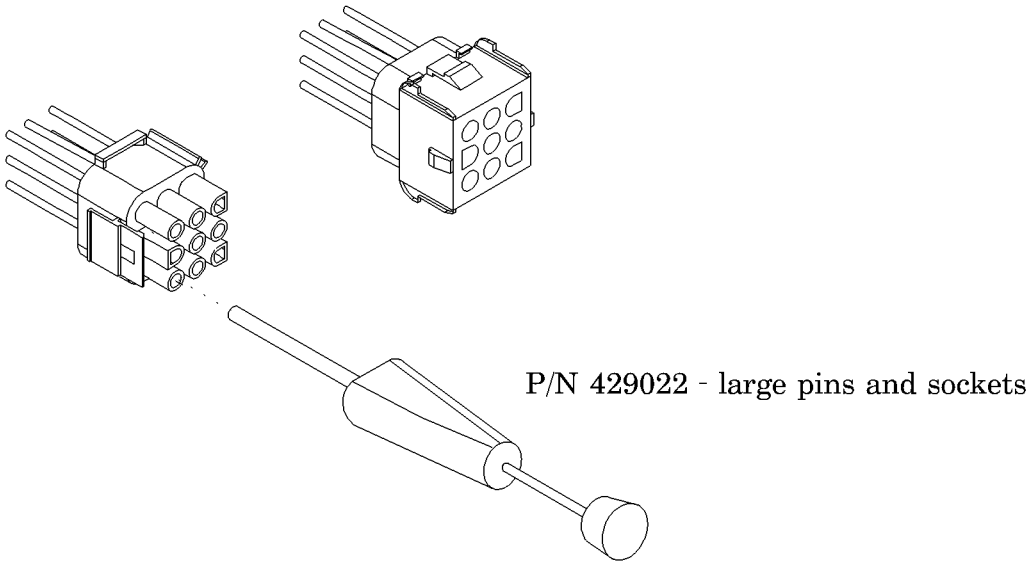

m168_052

6

NOTES:

Chapter 7
Accessories

Chapter Contents

NOTES:

Accessories

For Advanta™ Bed accessories, see table 7-1 on page 7-3.

Table 7-1. Accessories List

Part Number	Description
P818C08	Right bumper-face and bottom mount
P1410CA01	ZoneAire® Sleep Surface mattress with comfort ticking
P1410CA02	ZoneAire® Sleep Surface mattress with ultron ticking
P1410EA01	ZoneAire® Sleep Surface mattress with comfort ticking (flame retardant)
P1410EA02	ZoneAire® Sleep Surface mattress with ultron ticking (flame retardant)
P562CA1	Comfortline® mattress
P565CA	Comfortline® mattress
P562EA1	Comfortline® mattress (flame retardant)
P565EA	Comfortline® mattress (flame retardant)
P157-11	ISS block face mount installation kit
P157-03	ISS bed pole unit
P847B	Adapter (fracture frame—3/4" pin)
P847C	Adapter (fracture frame—1/2" pin)
P844C-48	Trapeze support
P9959A01	Bed extender assembly—without air
P9959A02	Bed extender assembly—with air
P2217	IV rod
P2221	Permanent IV pole
P2510BC71	UTV pendant control
P721C-4	Bed pendant control
P855E5	Siderail pads, head and foot
P855EH5	Siderail pads, head only

7.1 ZoneAire® Sleep Surface Mattress—P1410CA01/P1410CA02/ P1410EA01/P1410EA02

Tools required: None

Installation

1. Place the mattress (A) onto the bed frame (see figure 7-1 on page 7-4).

Figure 7-1. ZoneAire® Sleep Surface Mattress

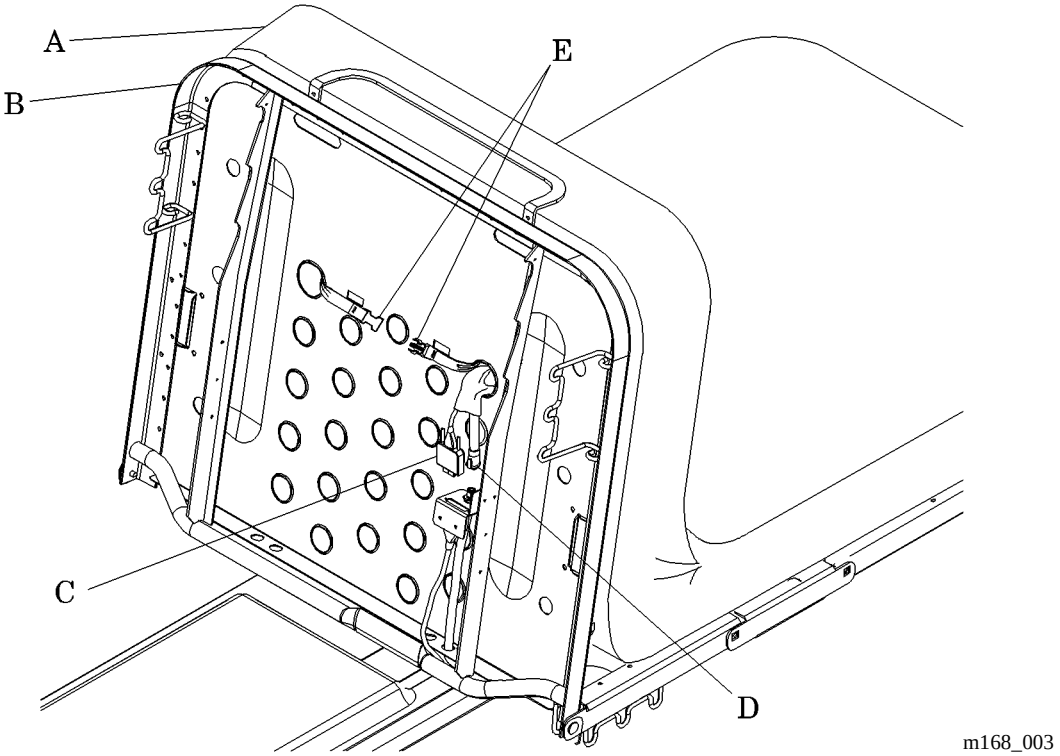

2. Lift the foot section (B) to access the air hose coupling (D) and cable connector (C).
3. Connect the plastic buckle (E) holding the mattress in place.
4. Connect the cable connector (C).
5. Connect the air hose coupling (D) to the bed.

Removal

SHOCK HAZARD:
Unplug the bed from its power source. Failure to do so could result in personal injury or equipment damage.

1. Unplug the bed from its power source.
2. Lift the foot section (B) to access the air hose coupling (D) and cable connector (C) (see figure 7-1 on page 7-4).
3. Depress the air hose coupling (D) to disconnect the mattress air hose from the bed.
4. Disconnect the cable connector (C).
5. Disconnect the plastic buckle (E) holding the mattress in place.
6. Remove the mattress (A).

7.2 Bed Extender Assembly—P9959

Tools required: None

Installation of the Lower Retracting Frame

SHOCK HAZARD:
Unplug the bed from its power source. Failure to do so could result in personal injury or equipment damage.

1. Unplug the bed from its power source.
2. Remove the footboard from the frame mounting posts (F).
3. Raise the upper retracting frame to allow access to the lower frame (G).
4. On the lower retracting frame bed extender, loosen both of the knobs (A) and rotate both of the J-hooks (B) to the outside.
5. Attach the lower retracting frame bed extender to the frame mounting posts (F) using the L-bracket mounting holes (C).
6. Rotate both of the J-hooks (B) under the footend corner of the bed frame, and tighten both of the knobs (A).
7. Plug the retracting frame bed extender cable connector (D) into the bed panel connector (E).
8. Replace the footboard onto the bed extender posts (H).

Figure 7-2. Lower Retracting Frame Bed Extender Assembly

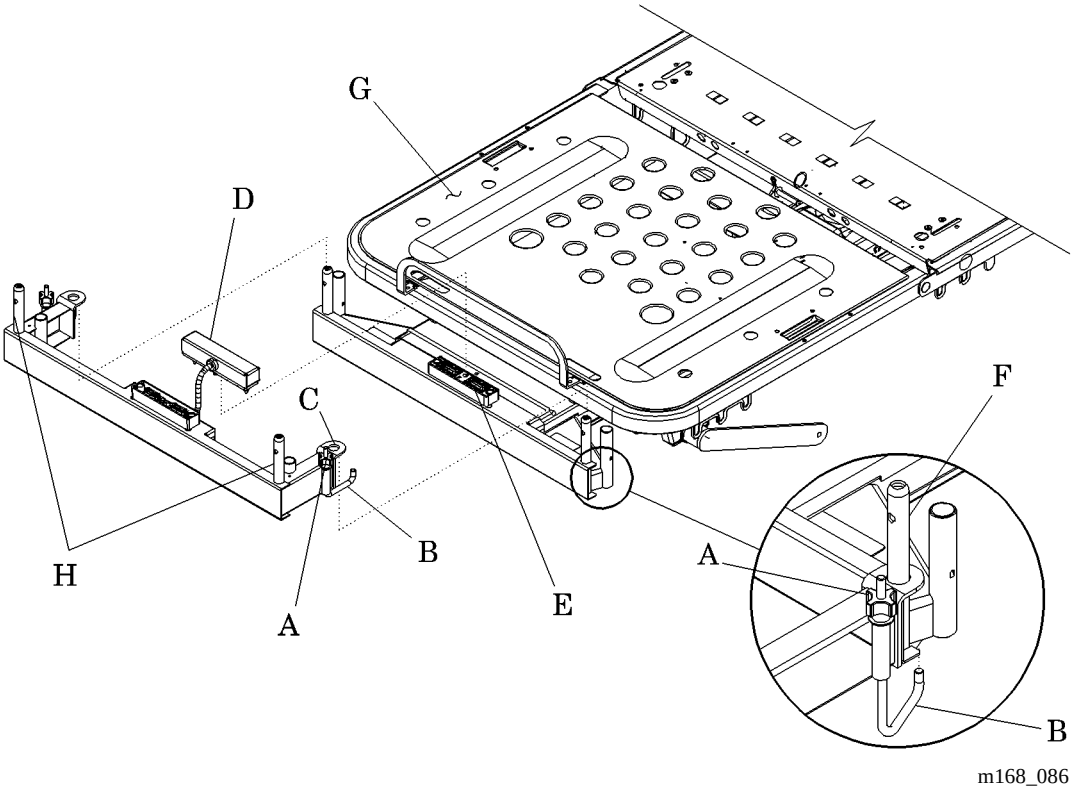

Removal of the Lower Retracting Frame

1. Remove the footboard from the bed extender posts (H).
2. Disconnect the bed extender cable connector (D) from the bed panel connector (E).
3. Loosen both of the bed extender knobs (A) and rotate both of the J-hooks (B) to the outside.
4. Lift the retracting frame extender off the bed panel mounting posts.

Installation of the Upper Retracting Frame

1. Fold down the mattress stop (E) on the bed frame.
2. While gripping the extender (A) on the sides and squeezing the latch assembly (B), slide the channels (C) over the end of the retracting frame until the latches (D) lock into place.

Figure 7-3. Upper Retracting Frame Bed Extender Assembly

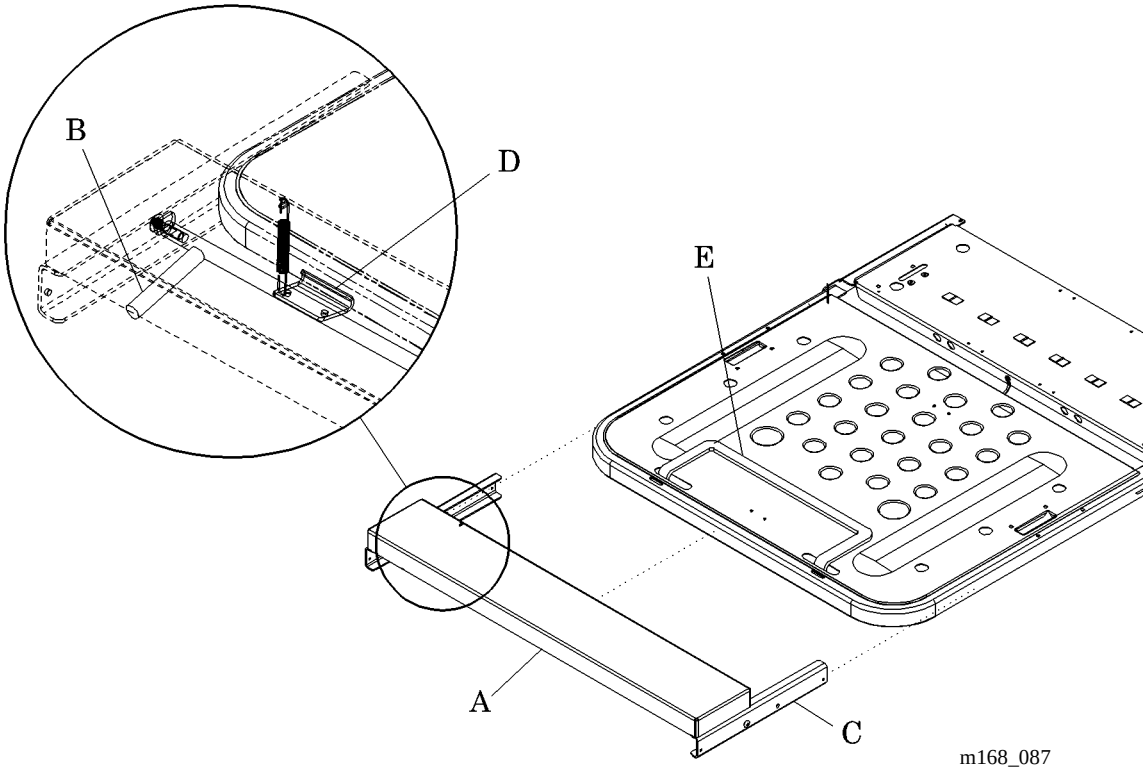

Removal of the Upper Retracting Frame

1. Squeeze the latch assembly (B) to disengage the latches (D).
2. Slide the extender (A) out.
3. Lift up the mattress stop (E) on the bed frame.

Schematic Wiring Diagram—Scale/Bed Exit Analog Board P/N 4975102

Back to Chapter 3

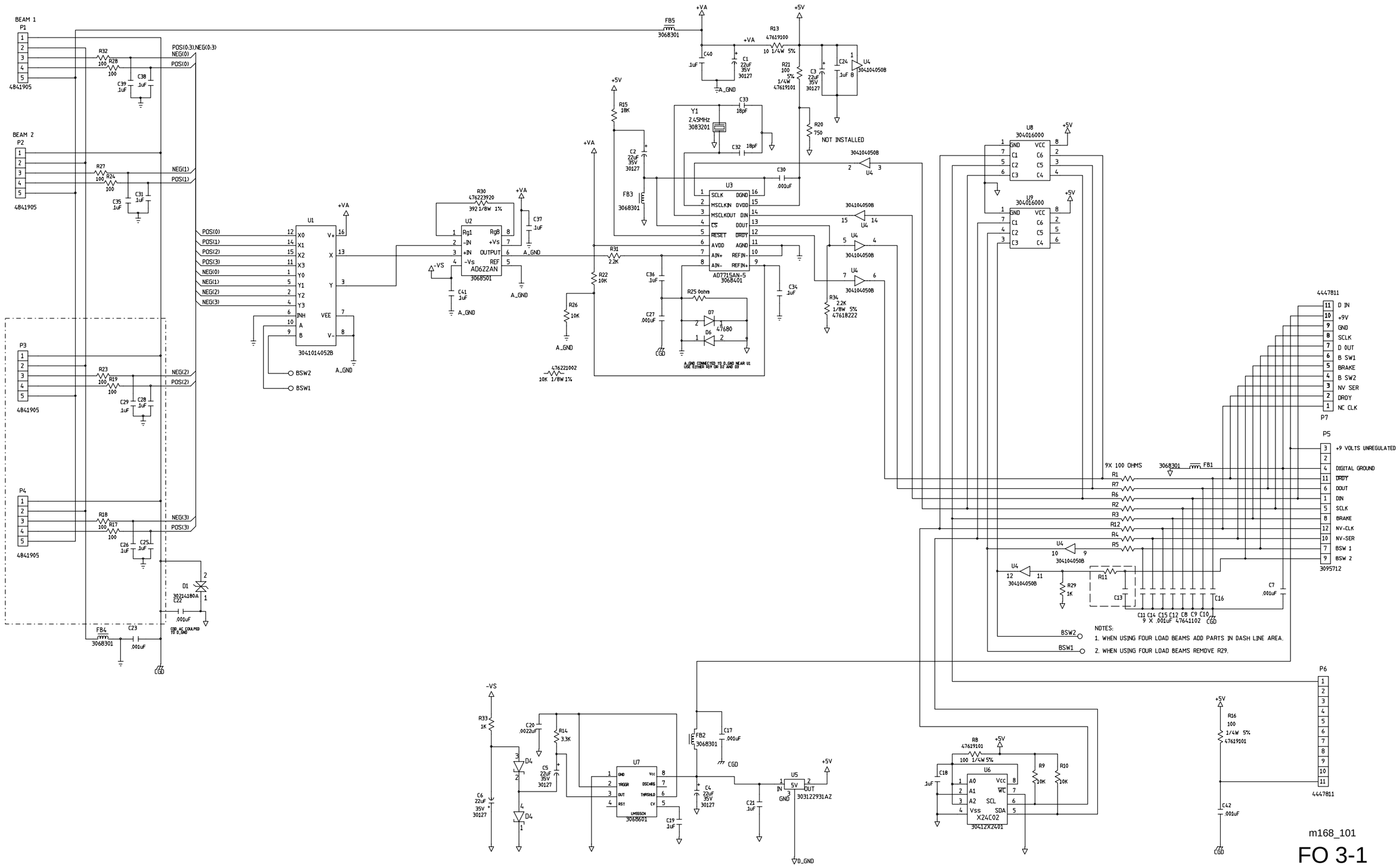

m168_101

FO 3-1

Schematic Wiring Diagram—Patient Switch Board (P/N 67208)

Back to Chapter 3

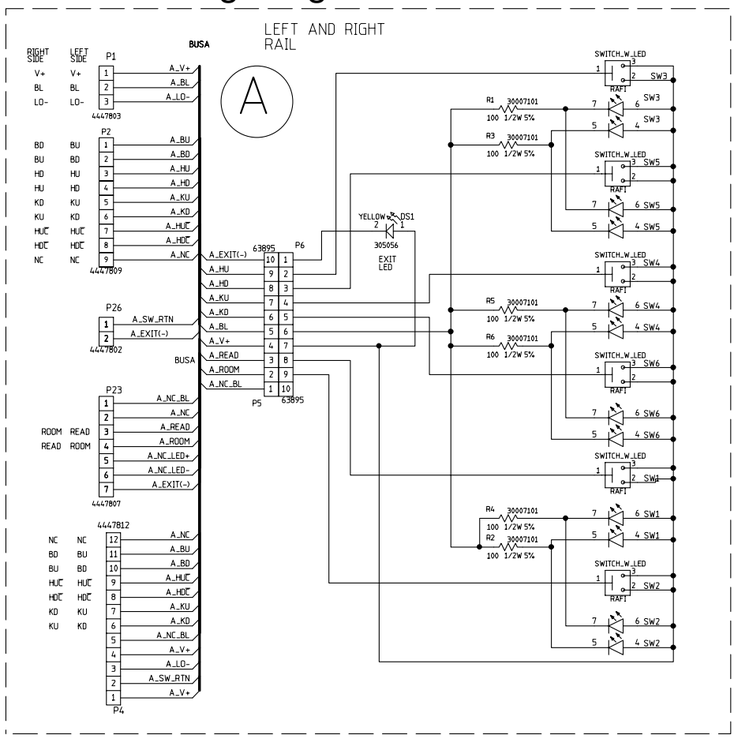

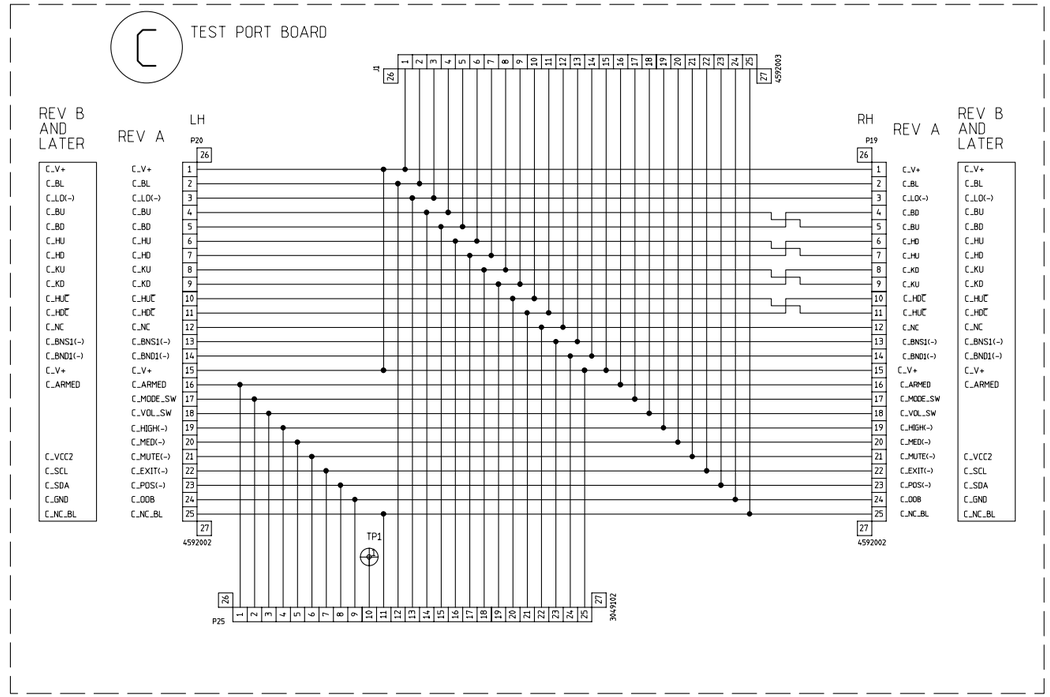

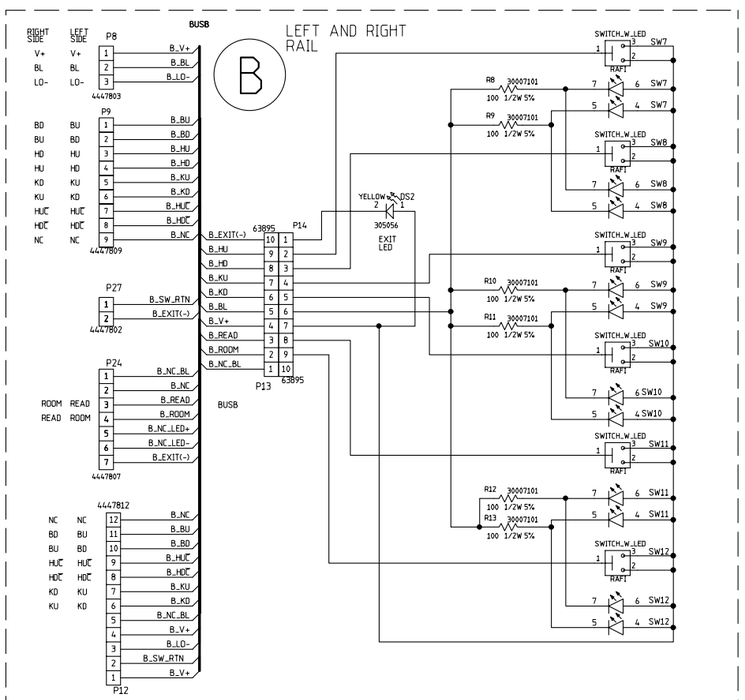

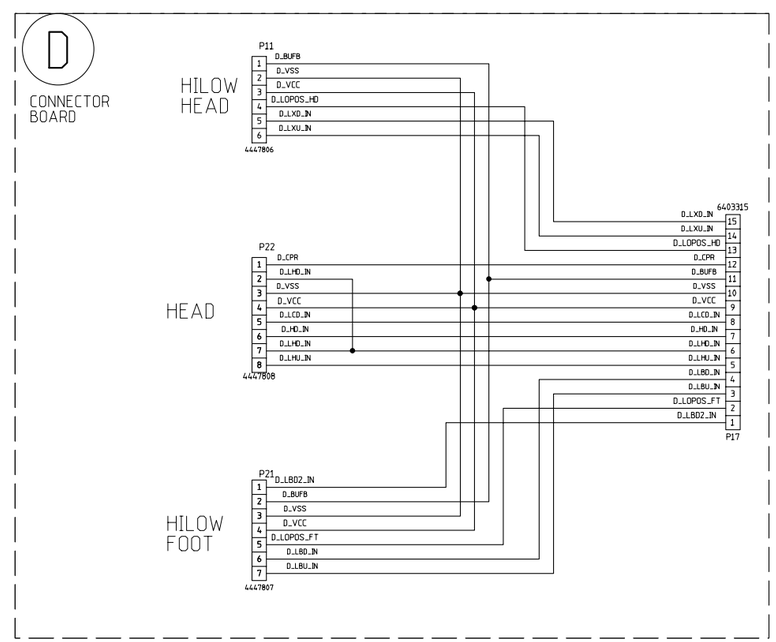

m168a103

FO 3-2

Schematic Wiring Diagram—J-Box/UTV Board (P/N 64935)

Back to Chapter 3

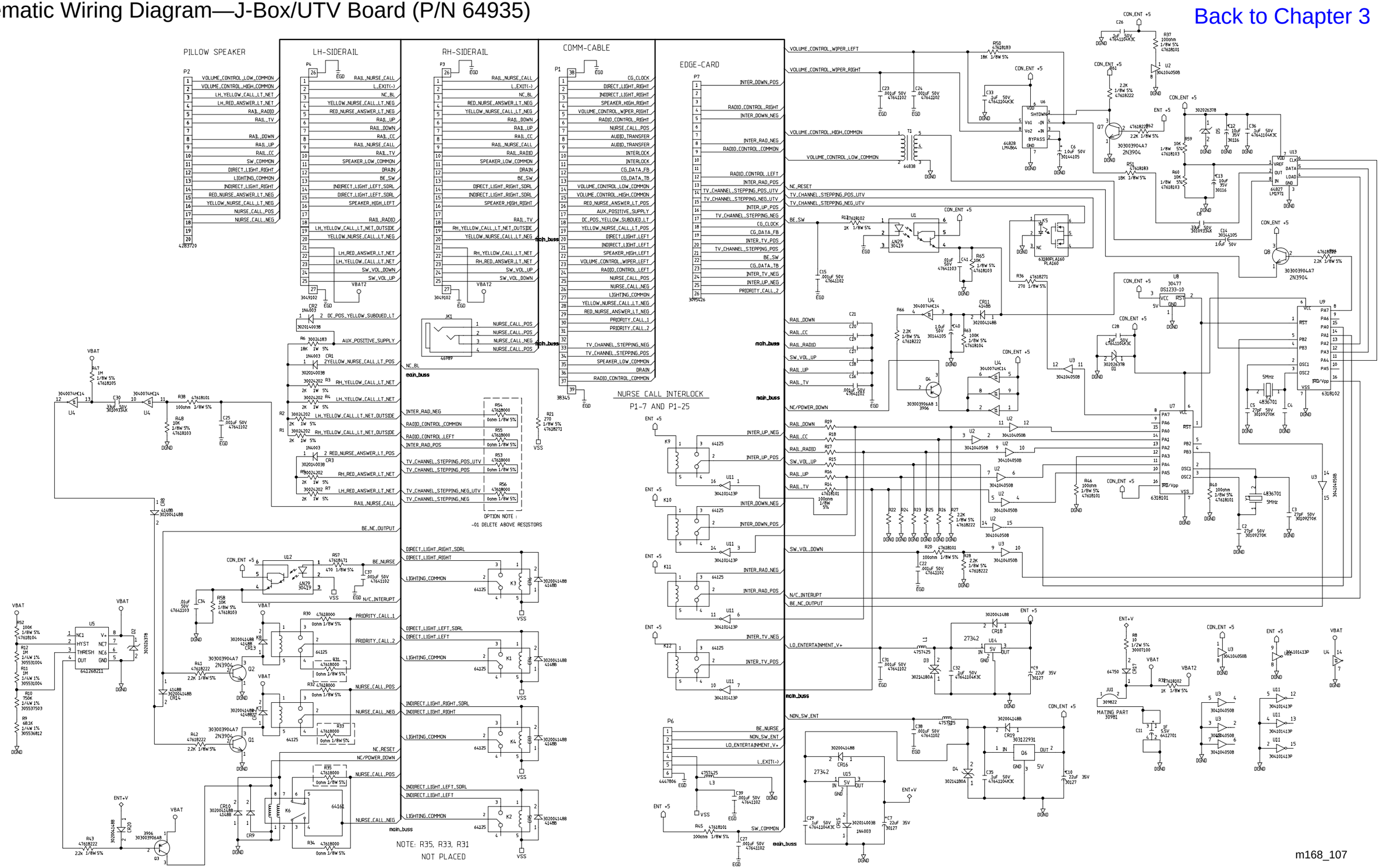

m168_107

Schematic Wiring Diagram—Footboard Scale Switch/Display P/N 63344

Back to Chapter 3

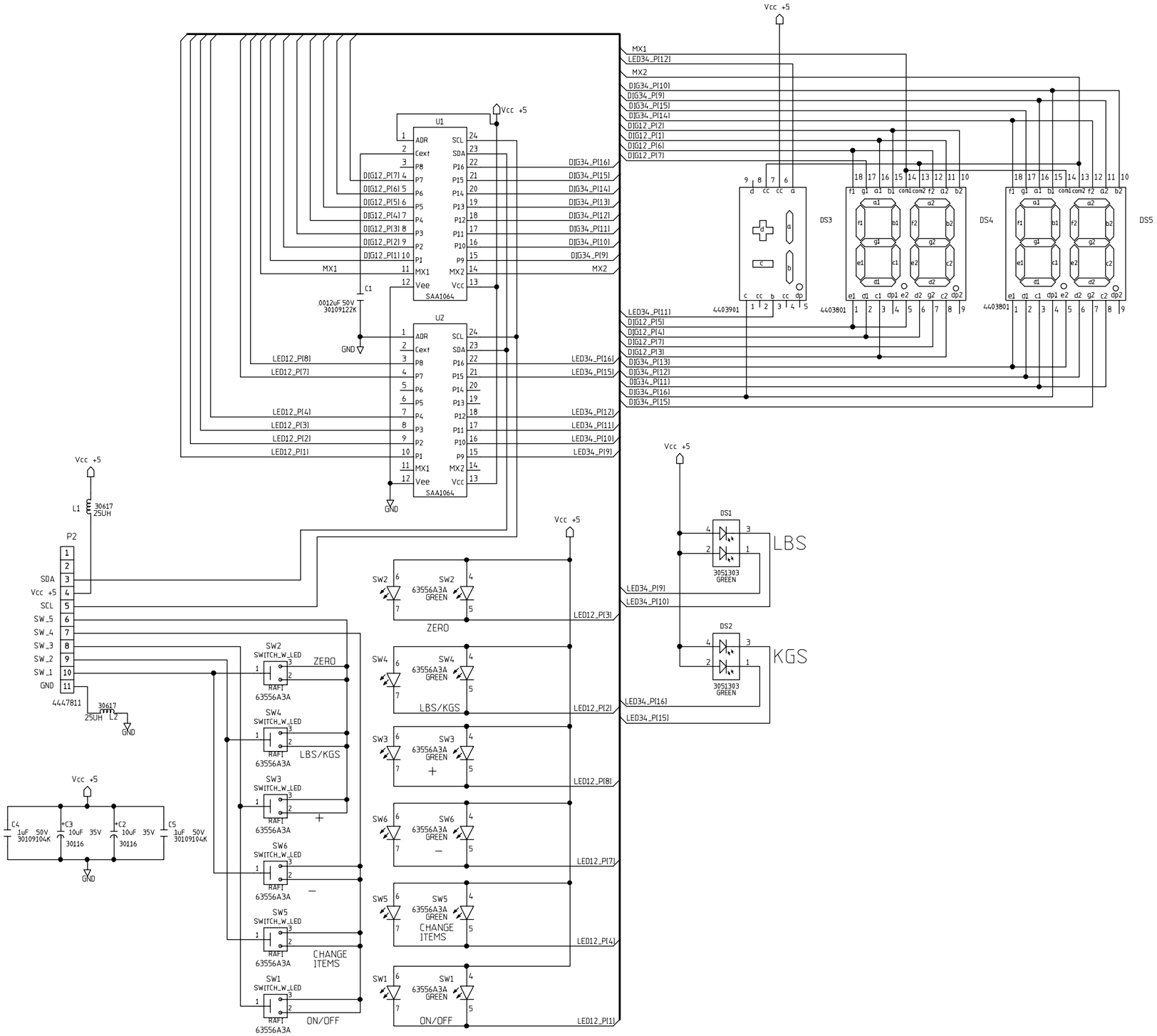

m168_109

Schematic Wiring Diagram—Footboard Function Switch Footboard LED PN 63280

Back to Chapter 3

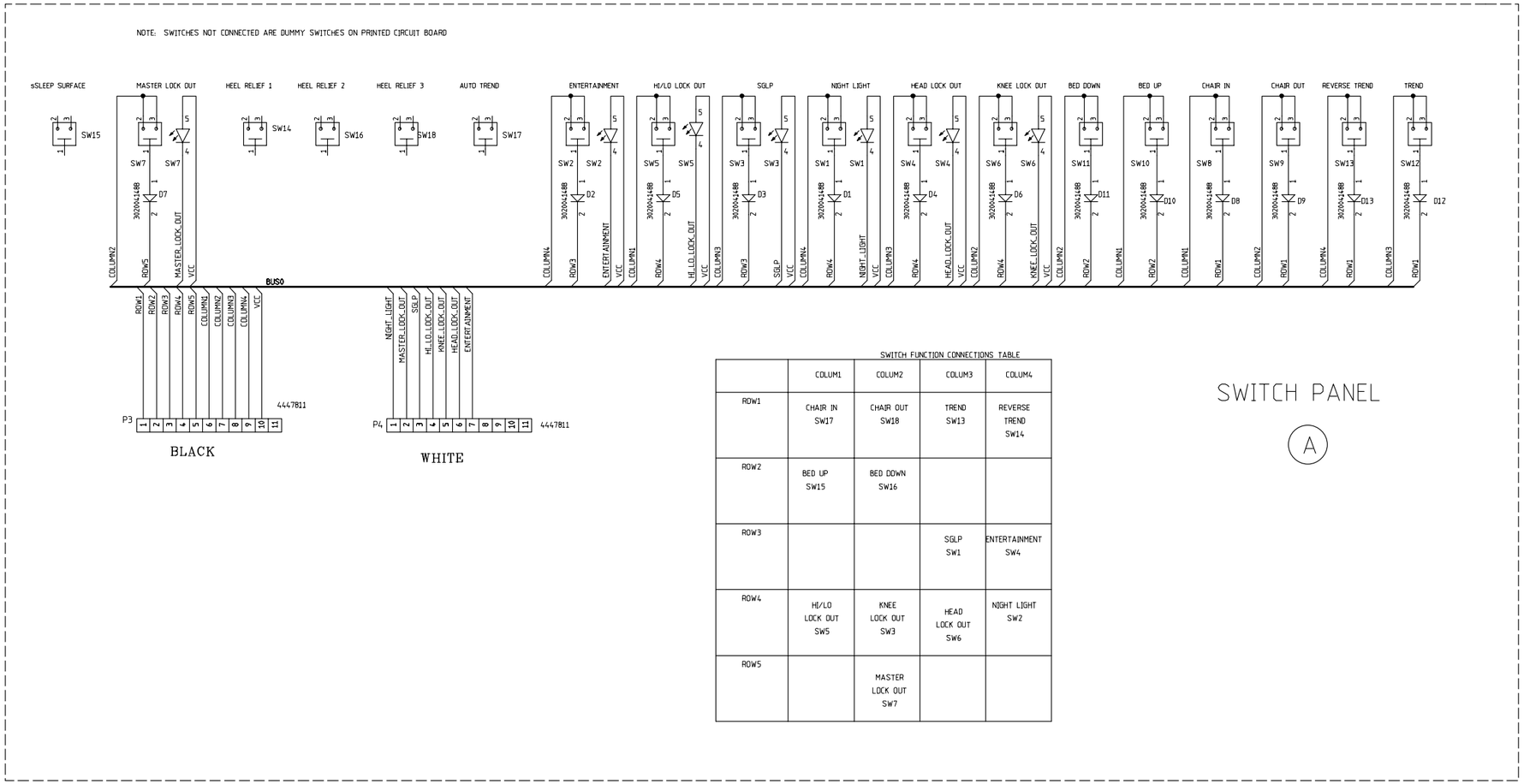

SWITCH FUNCTION CONNECTIONS TABLE

	COLUM1	COLUM2	COLUM3	COLUM4
ROW1	CHAIR IN SW17	CHAIR OUT SW18	TREND SW13	REVERSE TREND SW14
ROW2	BED UP SW15	BED DOWN SW16		
ROW3			SGLP SW1	ENTERTAINMENT SW4
ROW4	HI/LO LOCK OUT SW5	KNEE LOCK OUT SW3	HEAD LOCK OUT SW6	NIGHT LIGHT SW2
ROW5		MASTER LOCK OUT SW7		

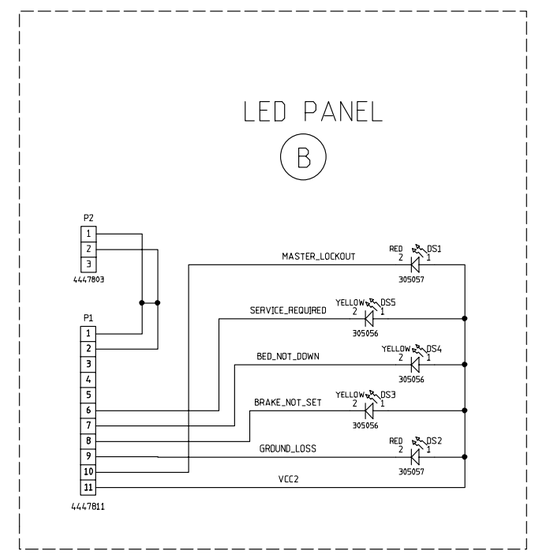

m168_111

Schematic Wiring Diagram—ZoneAire® Sleep Surface Switch Footboard LED Board (P/N 63276)

Back to Chapter 3

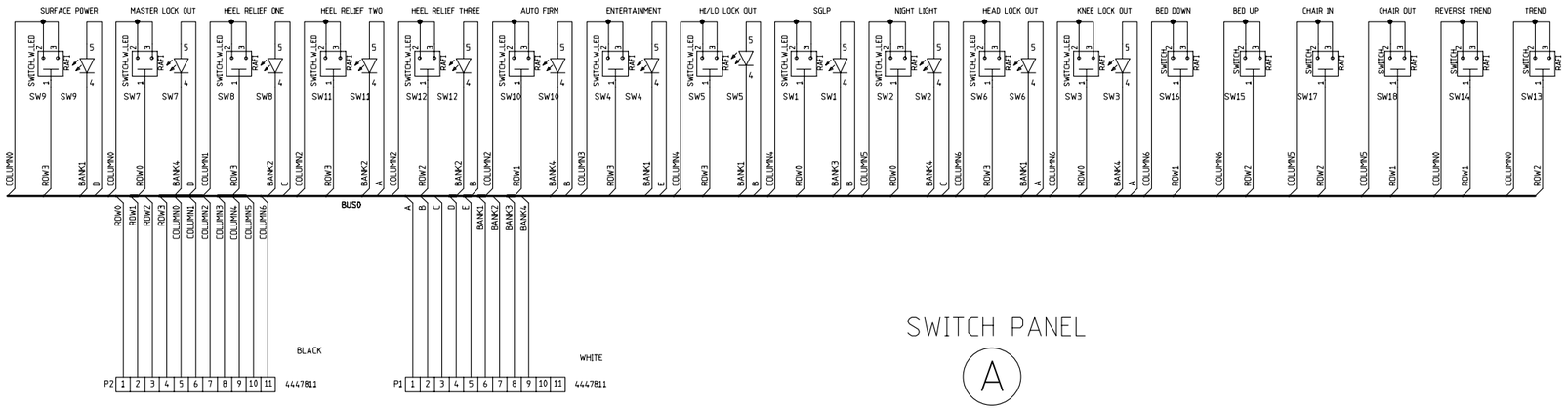

SWITCH PANEL

A

SWITCH FUNCTION CONNECTIONS TABLE

	COLUM0	COLUM1	COLUM2	COLUM3	COLUM4	COLUM5	COLUM6
ROW0	MASTER LOCK OUT SW7				SGLP SW1	NIGHT LIGHT SW2	KNEE LOCK OUT SW3
ROW1	REVERSE TREND SW14		AUTO FIRM SW10			CHAIR OUT SW18	BED DOWN SW16
ROW2	TREND SW13		HEEL RELIEF 3 SW12			CHAIR IN SW17	BED UP SW15
ROW3	SURFACE POWER SW9	HEEL RELIEF 1 SW8	HEEL RELIEF 2 SW11	ENTERTAINMENT SW4	HI/LO LOCK OUT SW5		HEAD LOCK OUT SW6

SWITCH LED FUNCTION CONNECTION TABLE

	A	B	C	D	E
BANK1	HEAD LOCK OUT SW6	HI/LO LOCK OUT SW5		SURFACE POWER SW9	ENTERTAINMENT SW4
BANK2	HEEL RELIEF 2 SW11	HEEL RELIEF 3 SW12	HEEL RELIEF 1 SW8		
BANK3		SGLP SW1			
BANK4	KNEE LOCK OUT SW3	AUTO FIRM SW10	NIGHT LIGHT SW2	MASTER LOCK OUT SW7	

LED PANEL

B

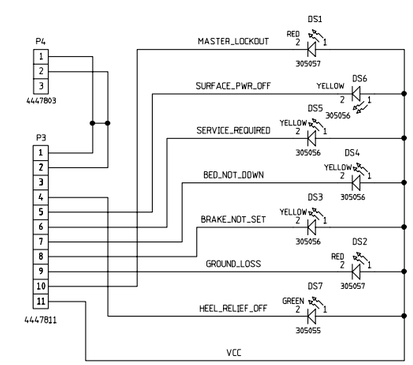

m168a113

Schematic Wiring Diagram—Logic Board PN 63285

Back to Chapter 3

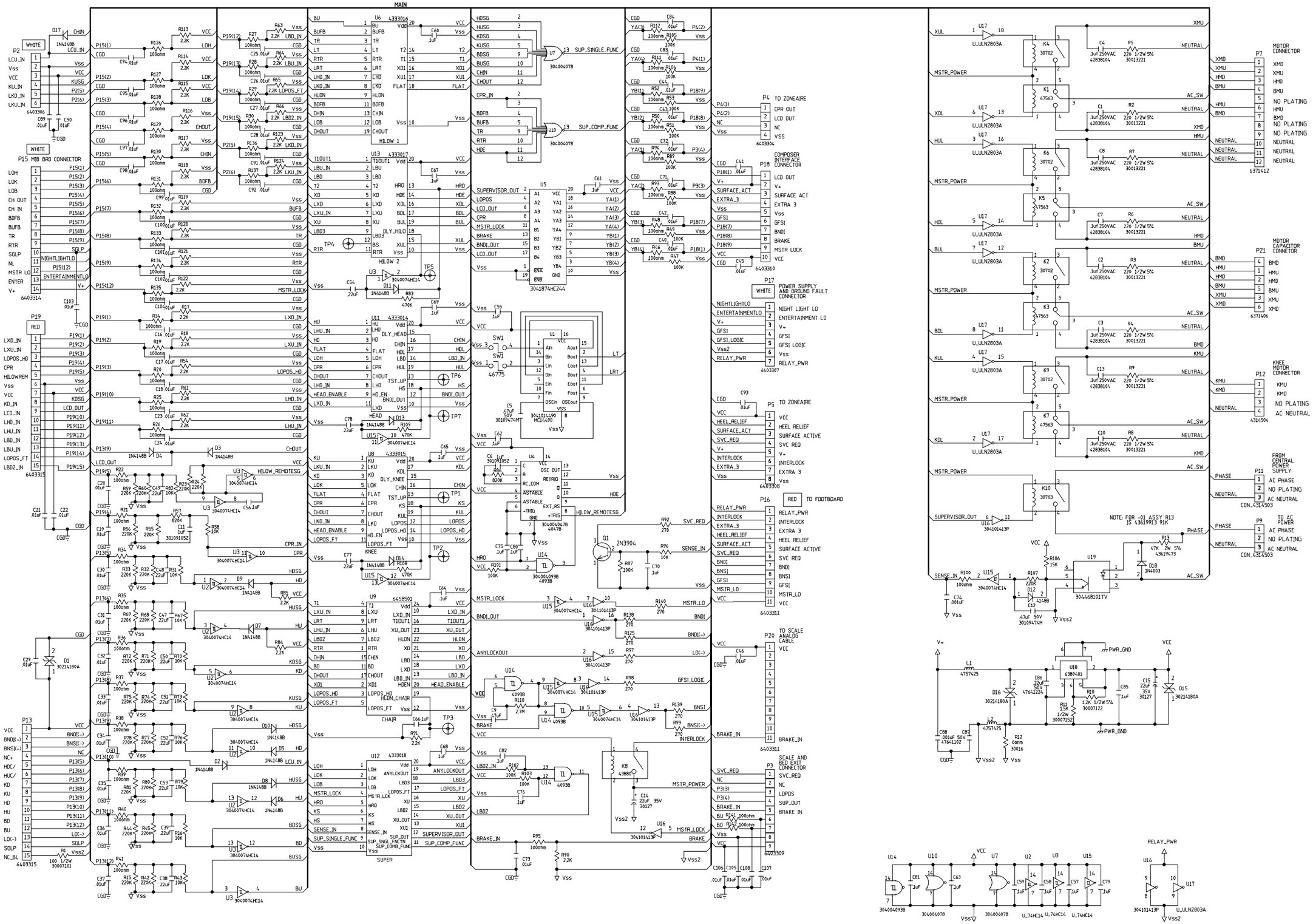

m168_115

Schematic Wiring Diagram—Power Board PN 63349

Back to Chapter 3

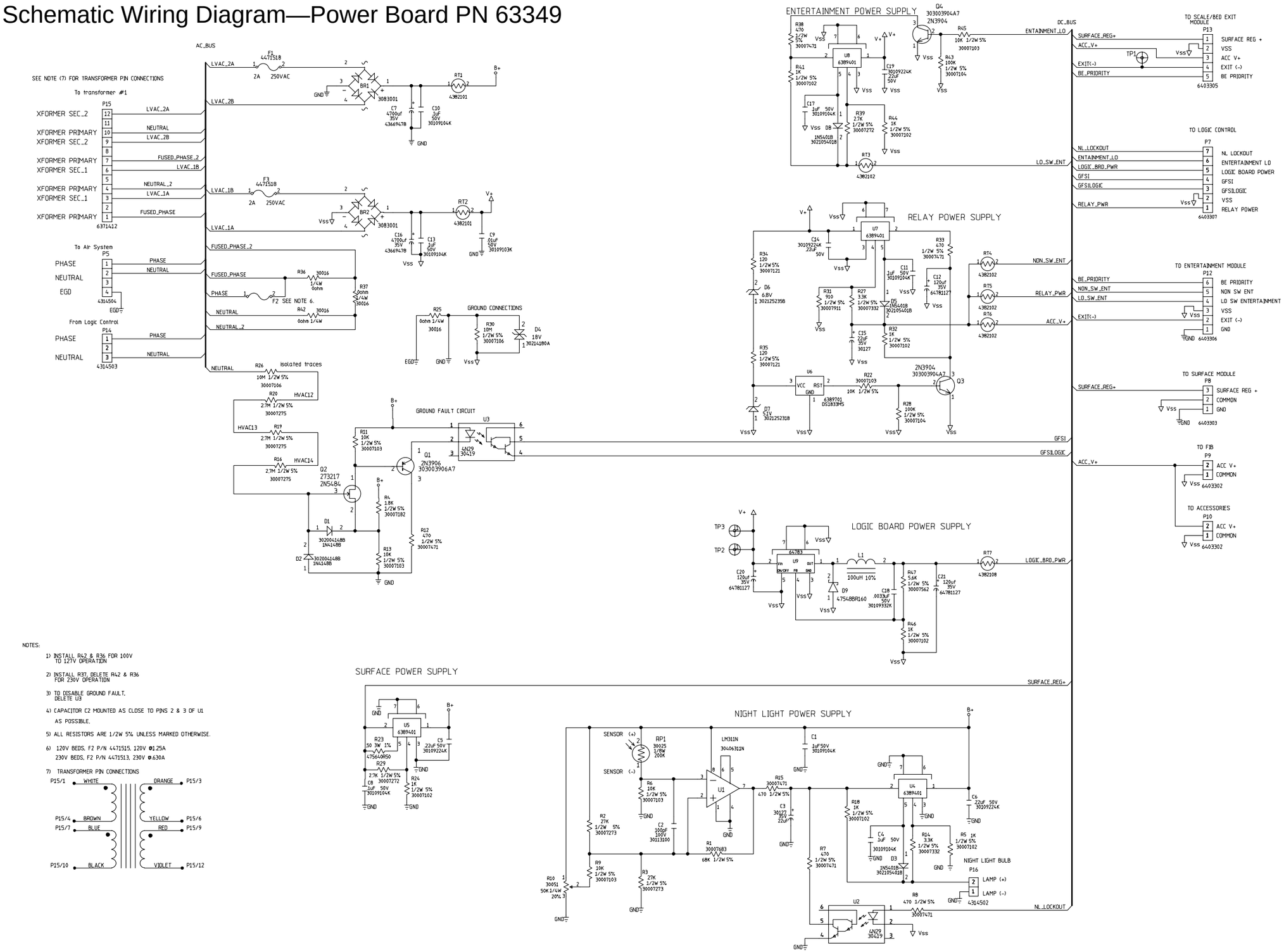

NOTES:

1) INSTALL R42 & R36 FOR 100V TO 127V OPERATION

2) INSTALL R37, DELETE R42 & R36 FOR 230V OPERATION

3) TO DISABLE GROUND FAULT, DELETE U3

4) CAPACITOR C2 MOUNTED AS CLOSE TO PINS 2 & 3 OF U1 AS POSSIBLE.

5) ALL RESISTORS ARE 1/2W 5% UNLESS MARKED OTHERWISE.

6) 120V BEDS, F2 P/N 4471515, 120V Ø1.25A
230V BEDS, F2 P/N 4471513, 230V Ø.630A

7) TRANSFORMER PIN CONNECTIONS

m168_118

Schematic Wiring Diagram—Frame Interface Board PN 63352

Back to Chapter 3

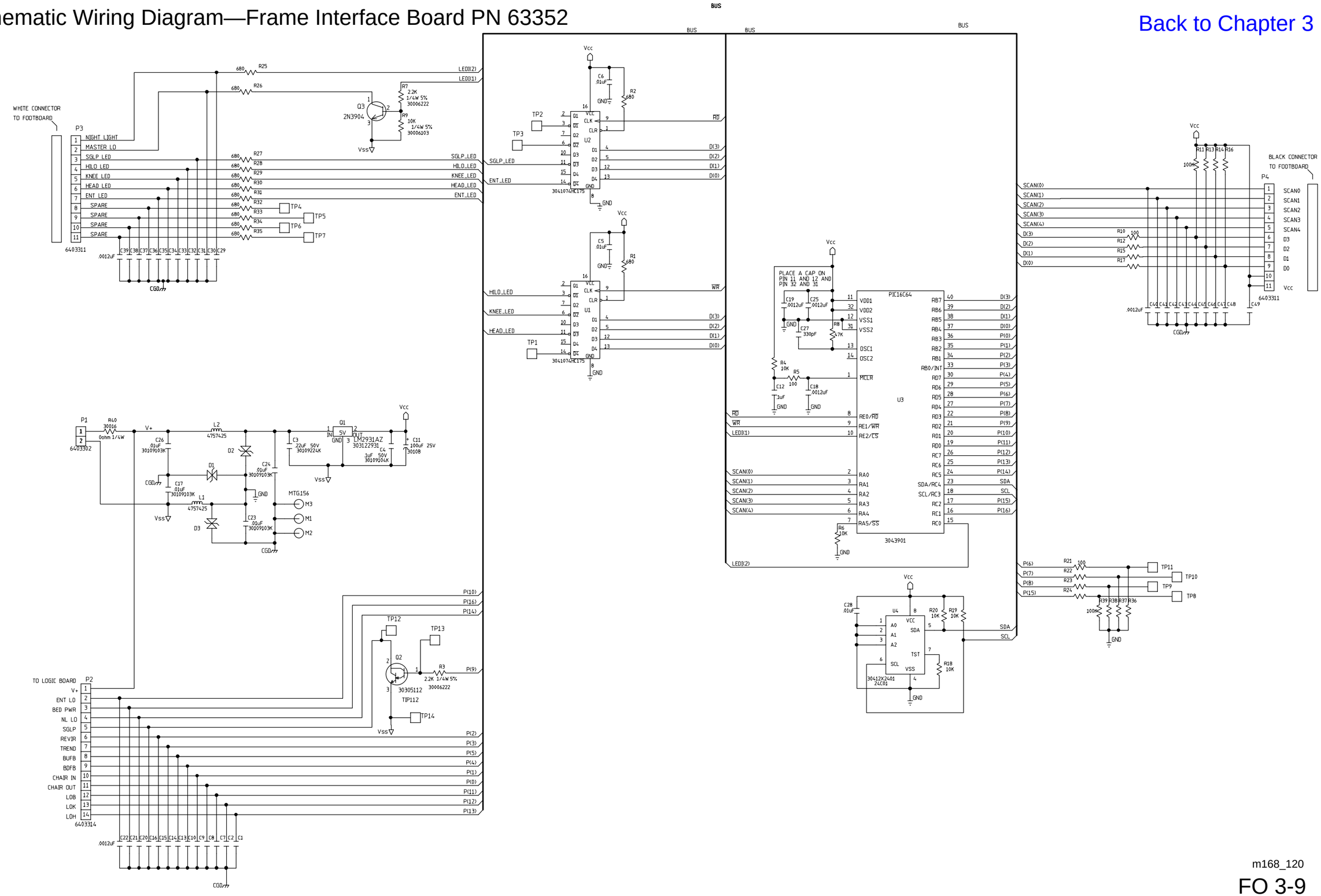

m168_120

Schematic Wiring Diagram—Scale/Bed Exit Control Board (P/N 63217)

Back to Chapter 3

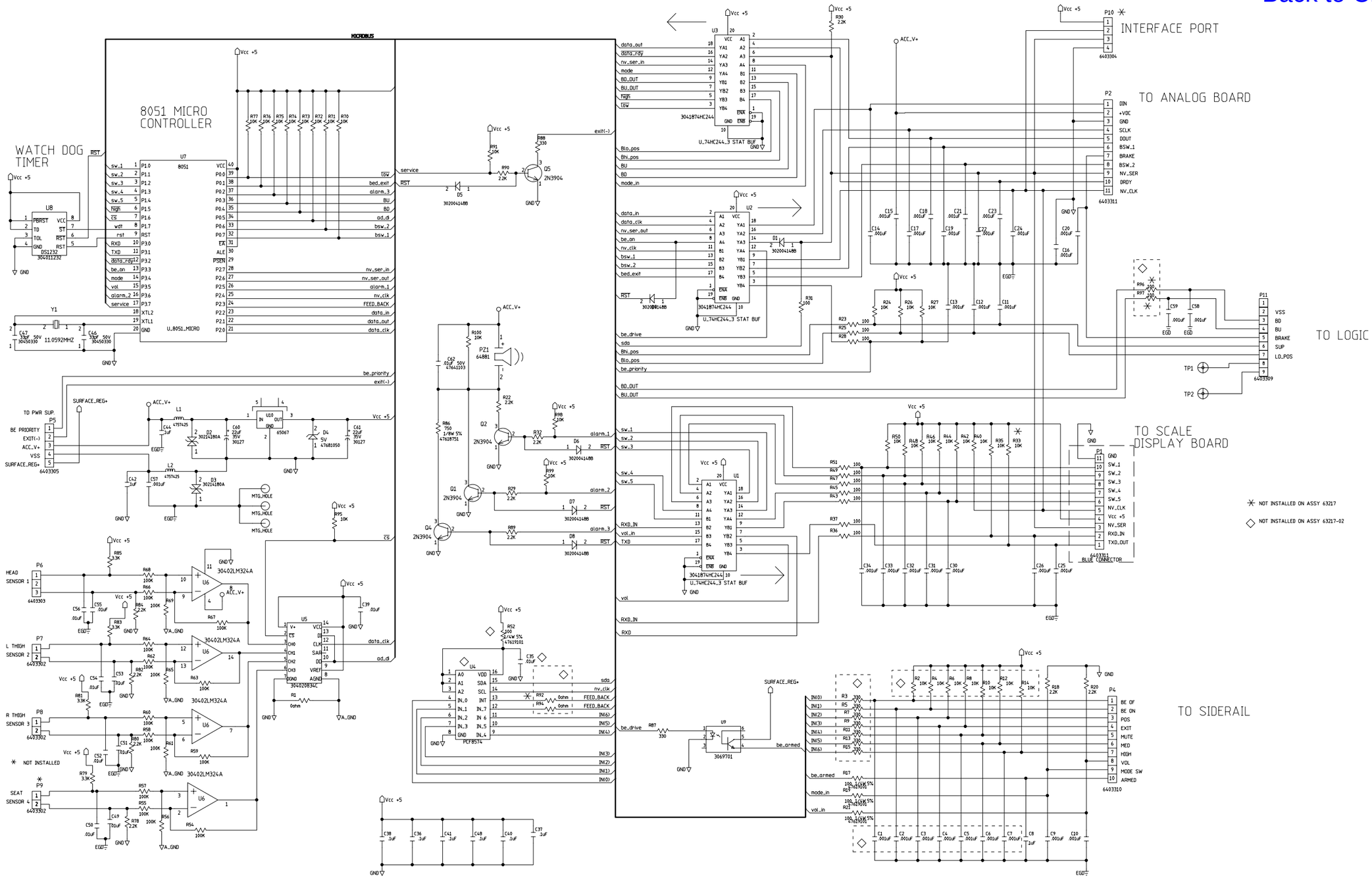

Schematic Wiring Diagram—ZoneAire® Sleep Surface Interface Board (P/N 6339601)

Back to Chapter 3

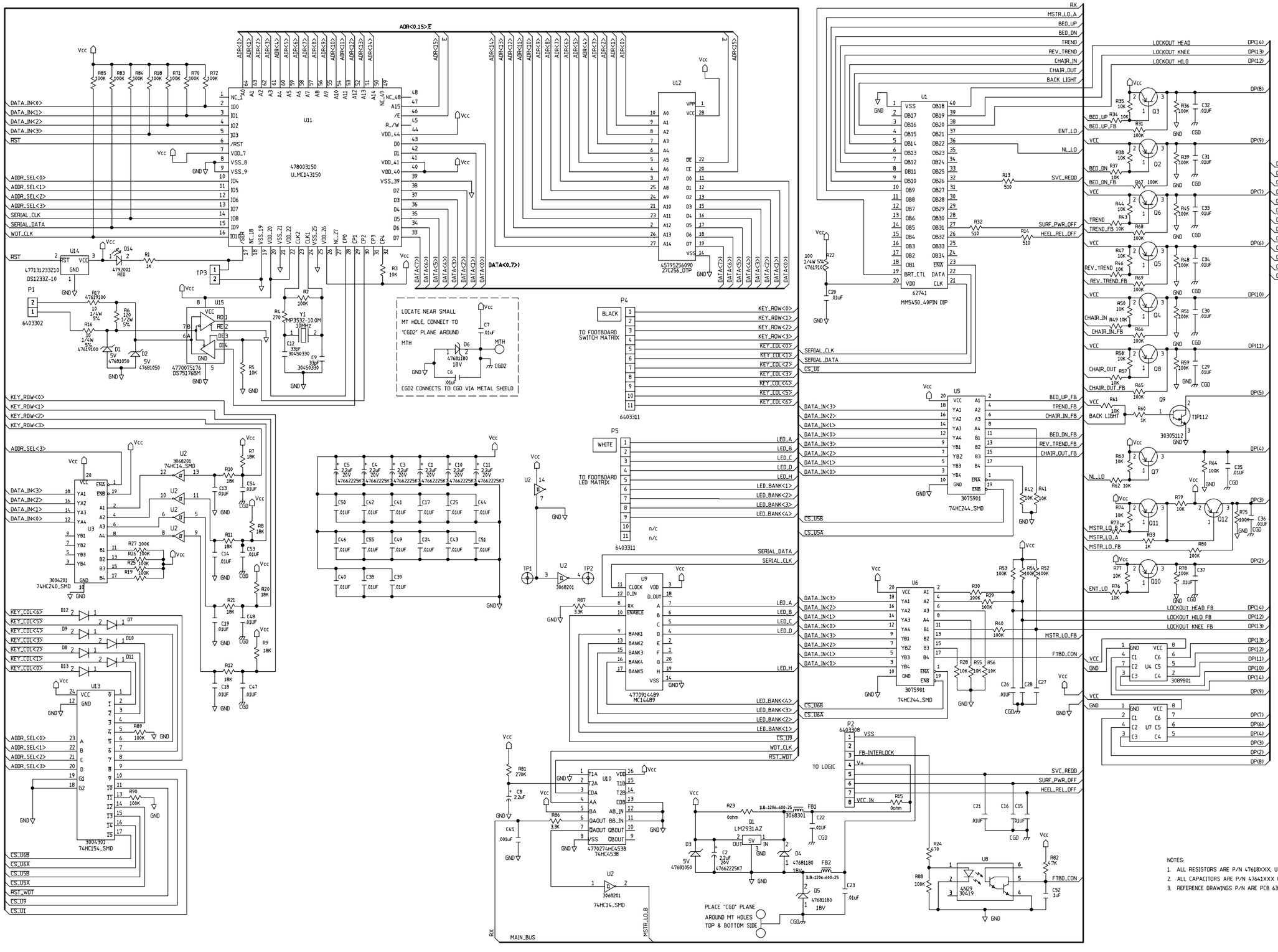

NOTES:

1. ALL RESISTORS ARE P/N 47618XXX, UNLESS OTHER WISE NOTED.
2. ALL CAPACITORS ARE P/N 47641XXX UNLESS OTHER WISE NOTED.
3. REFERENCE DRAWINGS P/N ARE PCB 63395, ASSEMBLY 63396.

m168a126

Schematic Wiring Diagram—Sensor Board PN 4474001

Back to Chapter 3

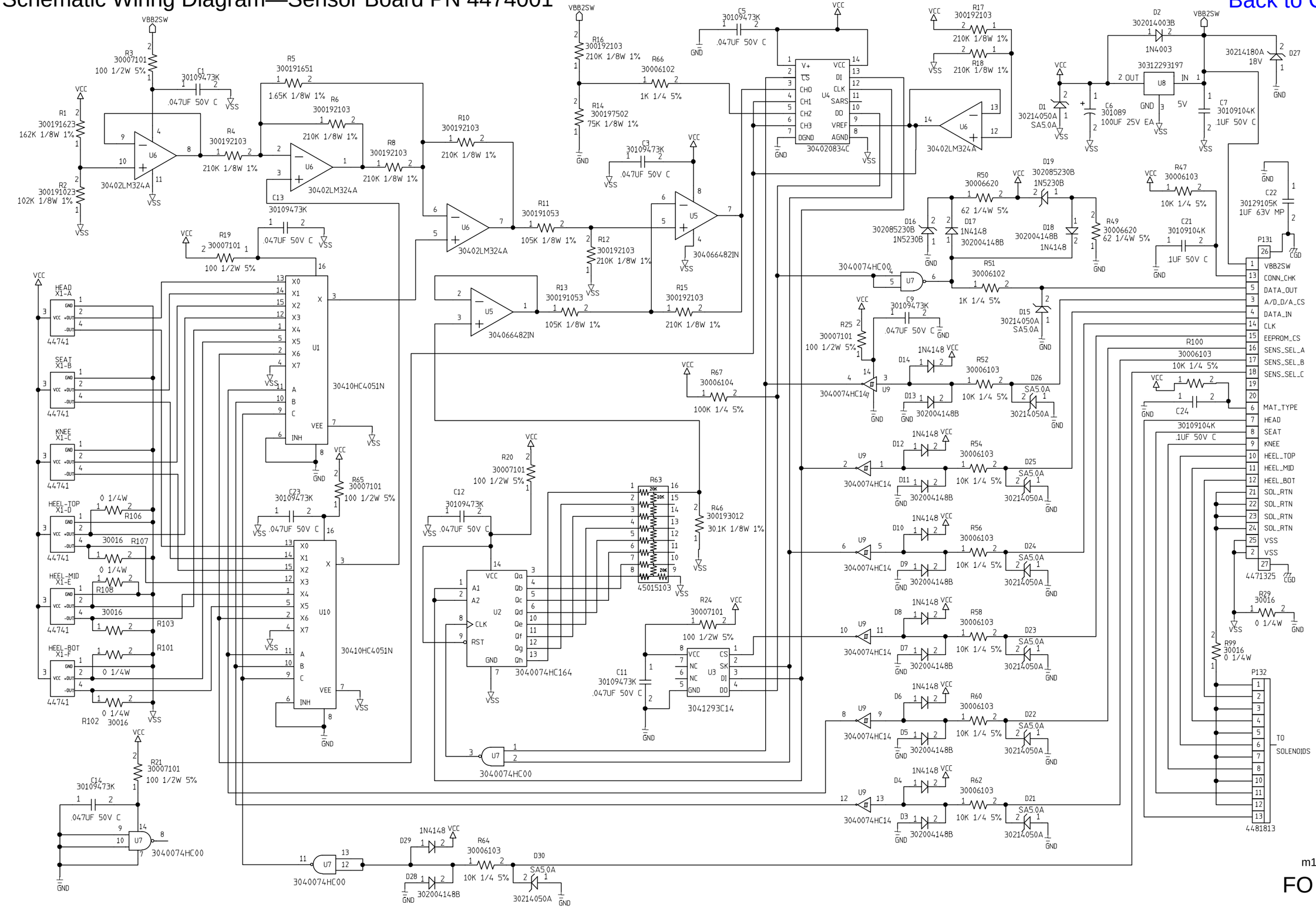

m168_128

Schematic Wiring Diagram—Air Control Board PN 44760 Sheet 1 of 2

Sheet 2 of 2

Back to Chapter 3

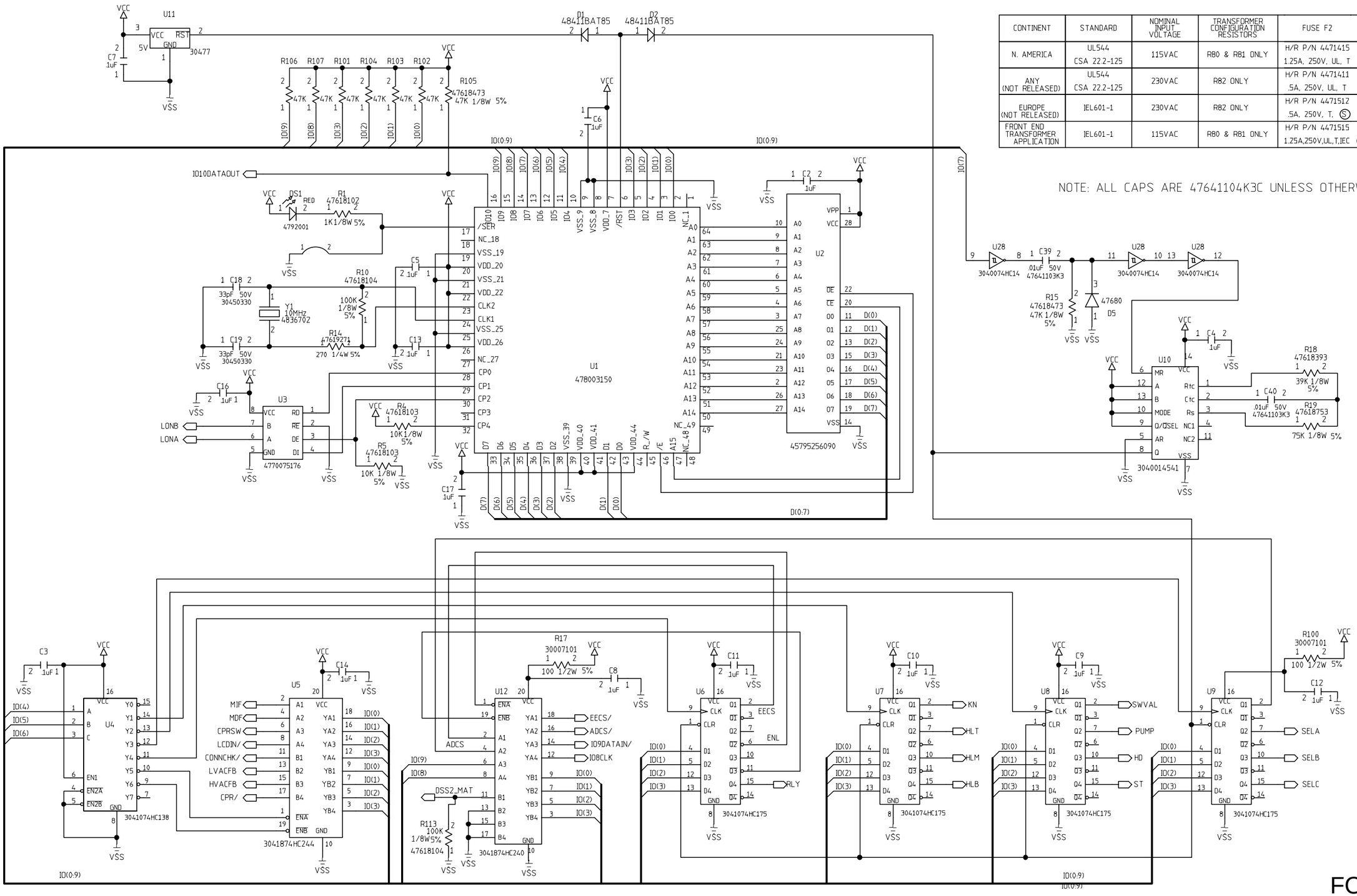

CONTINENT	STANDARD	NOMINAL INPUT VOLTAGE	TRANSFORMER CONFIGURATION RESISTORS	FUSE F2	R90 & R91
N. AMERICA	UL544 CSA 22.2-125	115VAC	R80 & R81 ONLY	H/R P/N 4471415 1.25A, 250V, UL, T	47Kohm, 2W, 5%, MO
ANY (NOT RELEASED)	UL544 CSA 22.2-125	230VAC	R82 ONLY	H/R P/N 4471411 .5A, 250V, UL, T	91Kohm, 2W, 5%, MO
EUROPE (NOT RELEASED)	IEL601-1	230VAC	R82 ONLY	H/R P/N 4471512 .5A, 250V, T, (S)	91Kohm, 2W, 5%, MO
FRONT END TRANSFORMER APPLICATION	IEL601-1	115VAC	R80 & R81 ONLY	H/R P/N 4471515 1.25A,250V,UL,T,IEC (S)	47Kohm, 2W, 5%, MO

NOTE: ALL CAPS ARE 47641104K3C UNLESS OTHERWISE SHOWN.

m168_147

Schematic Wiring Diagram—Air Control Board PN 44760 Sheet 2 of 2

Sheet 1 of 2

Back to Chapter 3

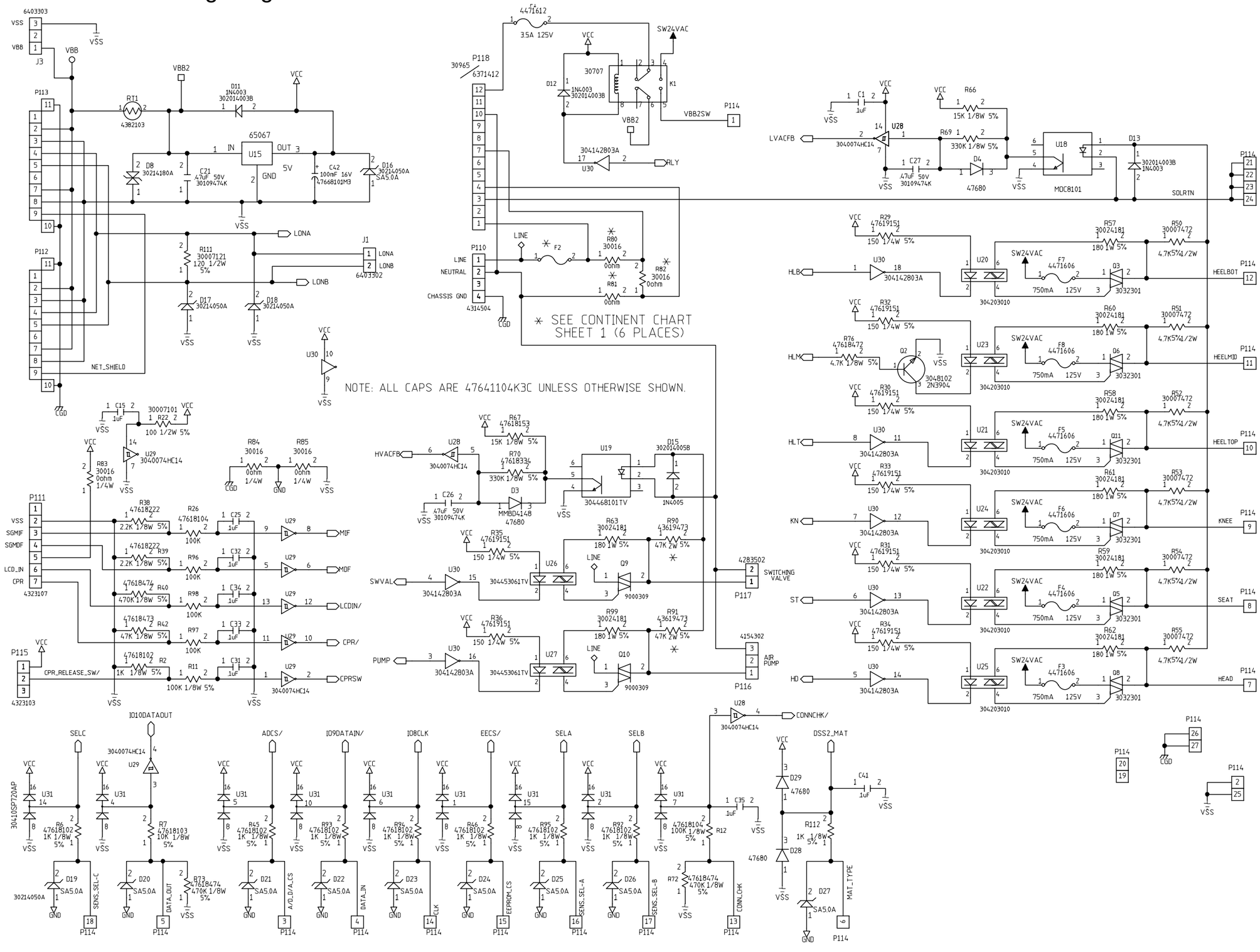

m168_177

FO 3-13.2

Schematic Wiring Diagram—Head Sensor Assembly (P/N 63888)

Back to Chapter 3

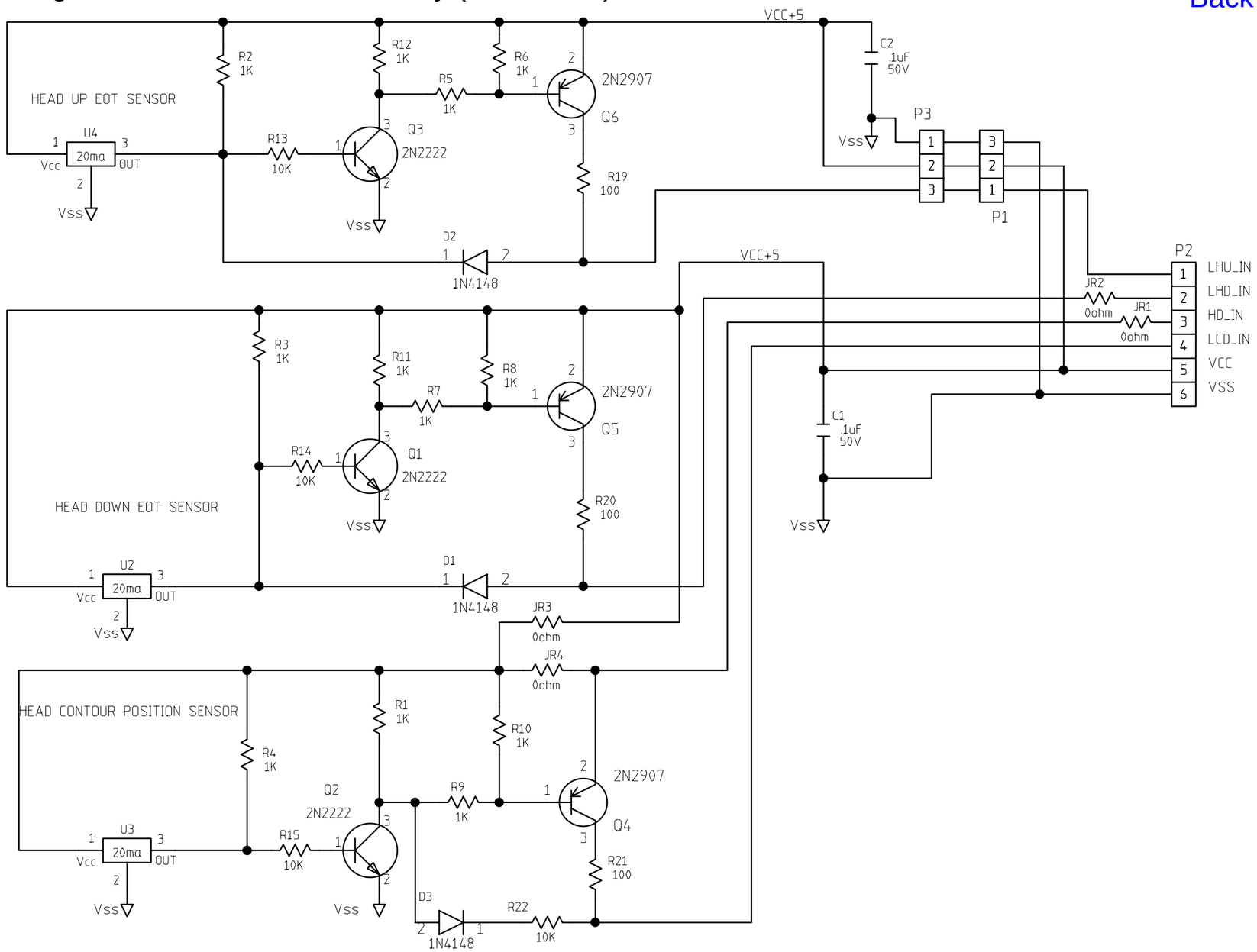

LOCATE CAPACITORS
CLOSE TO CONNECTORS

NOTES:

1. JR1, JR2, & JR3 ARE 0 OHMS RESISTORS TO LAYOUT PCB.
2. JR4, D3, AND R22, SHOWN FOR REFERENCE, NOT INSTALLED ON -01 ASY.

m168a186

Schematic Wiring Diagram—Advanta™ Bed Wiring Diagram (A model beds)

Back to Chapter 3

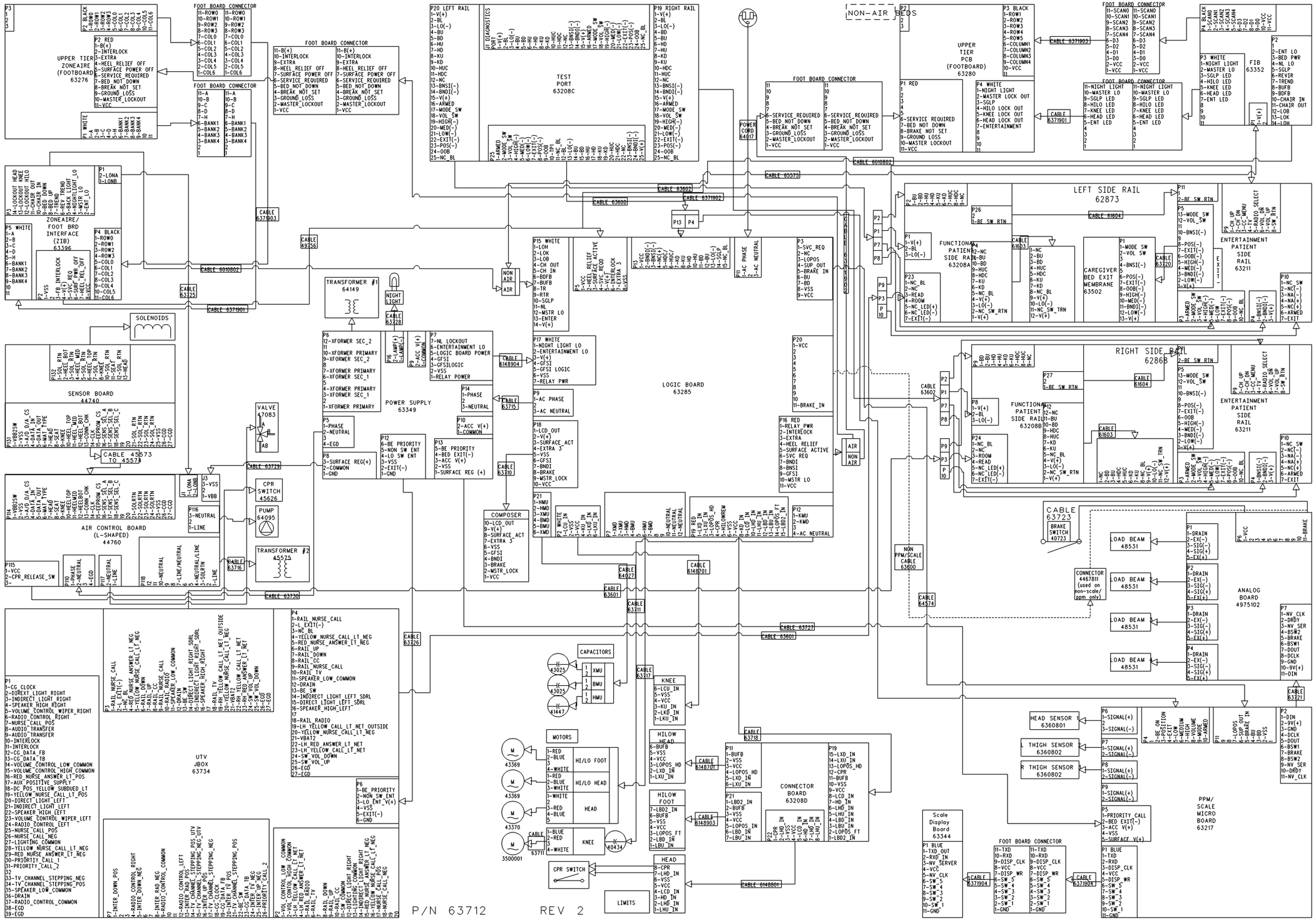

Schematic Wiring Diagram—HIlow/Knee Sensor PN 63885

Back to Chapter 3

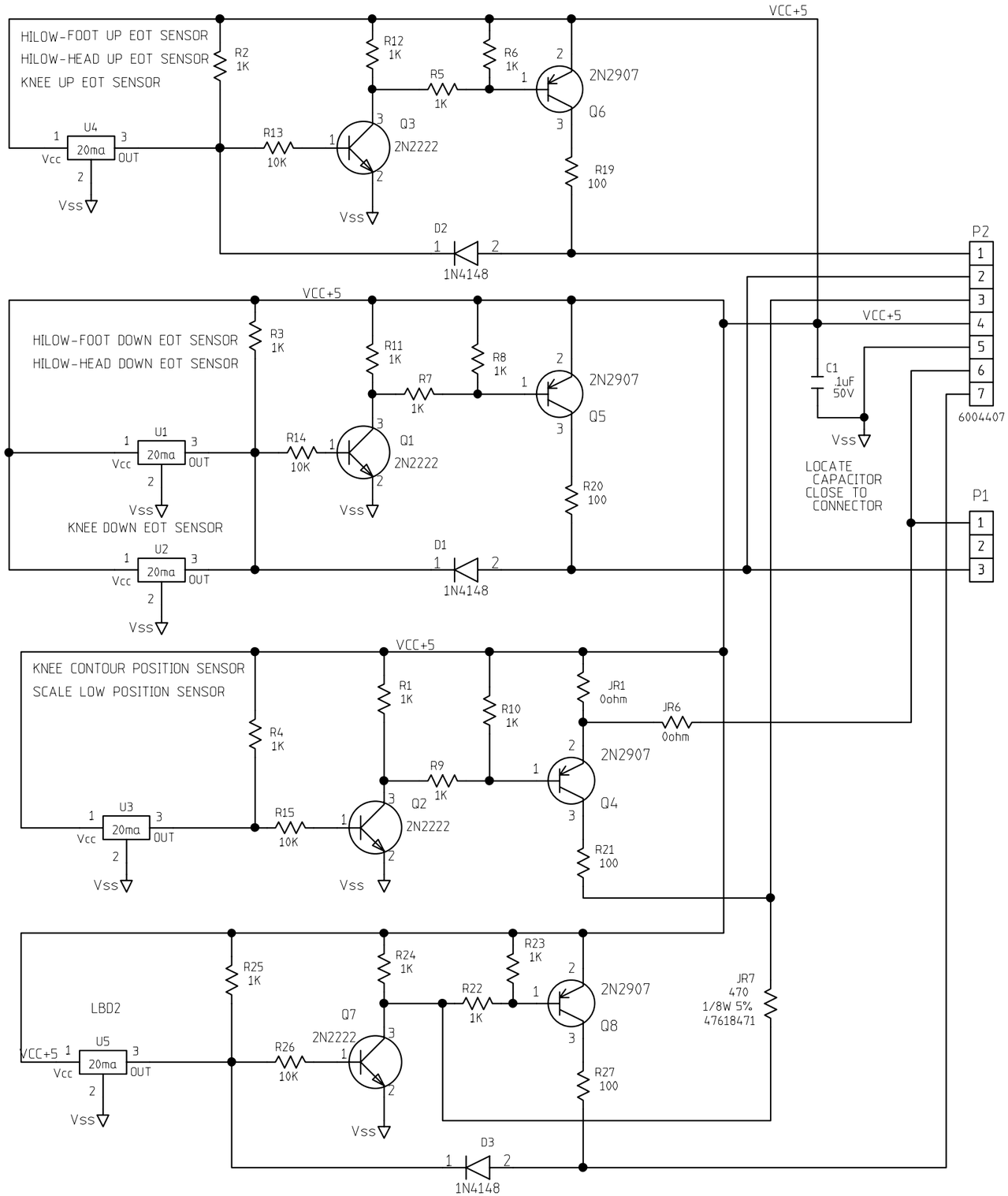

P2 FUNCTIONS		
-01 KNEE FUNCTION	-02 HEAD HILOW	-03 FOOT HILOW
1 LKU_IN	1 LXU_IN	1 LBU_IN
2 LKD_IN	2 LXD_IN	2 LBD_IN
3 HU	3 LOPOS_HD	3 LOPOS_FT
4 VCC	4 VCC	4 VCC
5 VSS	5 VSS	5 VSS
6 LCU_IN	6 BUFB	6 BUFB
———	———	7 LBO2

USE : P2
-6004406 ON HEAD HILOW & KNEE
-6004407 ON FOOT HILOW
(ON PCB EXTEND GROUND LUG ON CONNECTOR SUCH THAT 6 OR 7 WILL CONNECT)

FOR KNEE :	FOR HEAD HILOW:	FOR FOOT HILOW:
INSTALL JR6 AND ASSOCIATED KNEE DOWN SENSOR U2 AND DELETE JR1,JR7,U5, Q7,Q8,D3,R22-R27.	INSTALL JR1,JR7 AND ASSOCIATED HILO DOWN SENSOR U1 AND DELETE JR6, ADD: U5,Q7,Q8.D3,R22-R27	INSTALL JR1,U5, Q7,Q8,D3,R22-R27. HILOW DOWN SENSOR U1 DELETE JR6, JR7

NOTES:

1. JR1 & JR6 ARE 0 OHMS RESISTORS TO SELECT BED FUNCTION.
2. P1 NOT USED ON 6388501

m168_178

Schematic Wiring Diagram—Inner Patient II Board (P/N 67203) (B model beds)

Back to Chapter 3

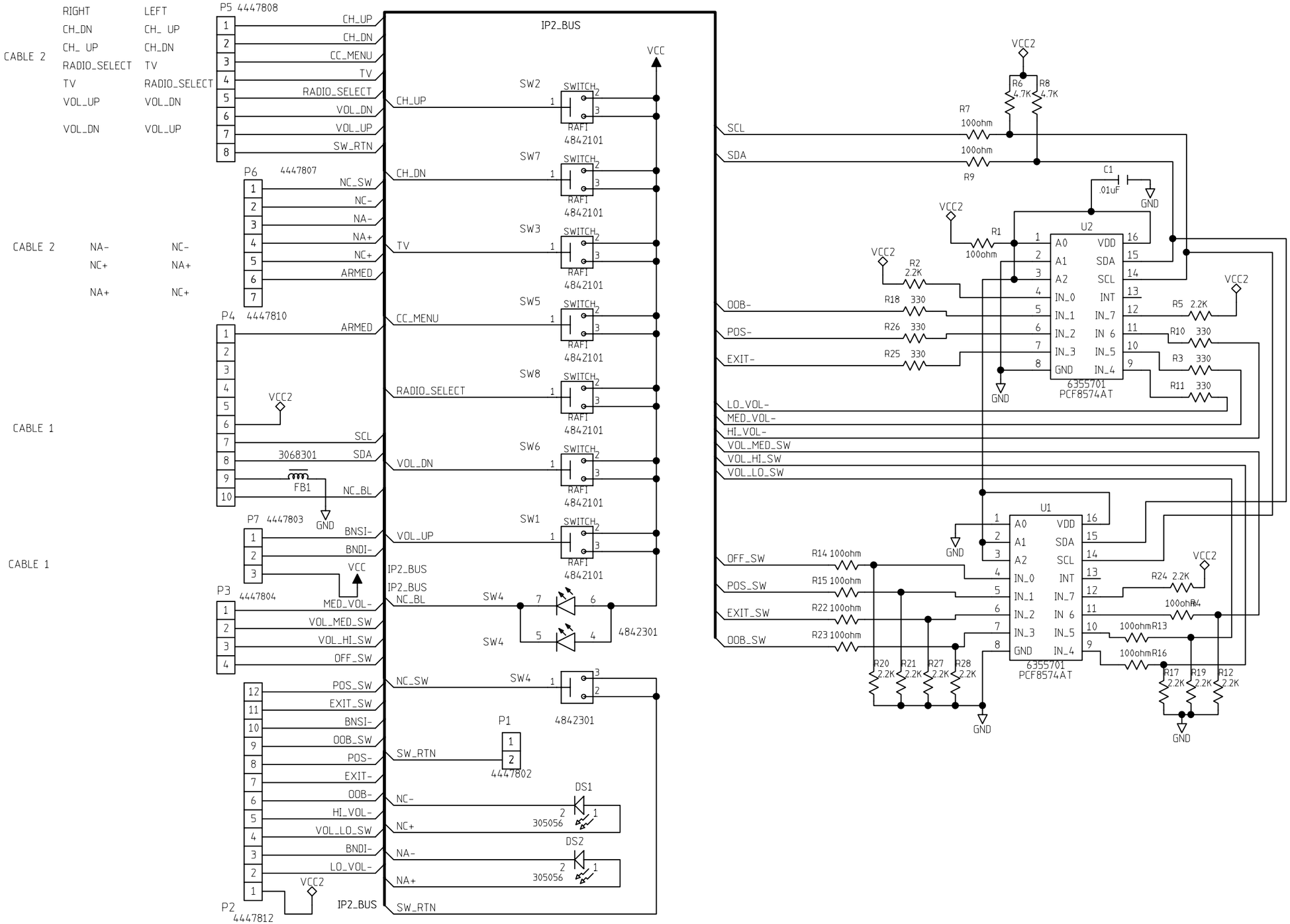

m168a179

Schematic Wiring Diagram—Advanta™ Bed Wiring Diagram (B model beds)

Back to Chapter 3