GE Medical Systems

Technical Publication

Direction 2227894
Revision 3

GE Medical Systems
LOGIQ™ 700 Service Manual

Operating Documentation

Copyright© 1999, 2000, 2004 by General Electric Inc.
All Rights Reserved

GE Medical Systems

GE Medical Systems: Telex 3797371
P.O. Box 414, Milwaukee, Wisconsin 53201 U.S.A.
(Asia, Pacific, Latin America, North America

GE Medical Systems – Europe: Tel: +49 (0) 212 28 02 208
Beethovenstraße 239, Postfach 11 05 60, D–42655 Solingen,
GERMANY

WARNING

- **THIS SERVICE MANUAL IS AVAILABLE IN ENGLISH ONLY.**
- **IF A CUSTOMER'S SERVICE PROVIDER REQUIRES A LANGUAGE OTHER THAN ENGLISH, IT IS THE CUSTOMER'S RESPONSIBILITY TO PROVIDE TRANSLATION SERVICES.**
- **DO NOT ATTEMPT TO SERVICE THE EQUIPMENT UNLESS THIS SERVICE MANUAL HAS BEEN CONSULTED AND IS UNDERSTOOD.**
- **FAILURE TO HEED THIS WARNING MAY RESULT IN INJURY TO THE SERVICE PROVIDER, OPERATOR OR PATIENT FROM ELECTRIC SHOCK, MECHANICAL OR OTHER HAZARDS.**

AVERTISSEMENT

- **CE MANUEL DE MAINTENANCE N'EST DISPONIBLE QU'EN ANGLAIS.**
- **SI LE TECHNICIEN DU CLIENT A BESOIN DE CE MANUEL DANS UNE AUTRE LANGUE QUE L'ANGLAIS, C'EST AU CLIENT QU'IL INCOMBE DE LE FAIRE TRADUIRE.**
- **NE PAS TENTER D'INTERVENTION SUR LES ÉQUIPEMENTS TANT QUE LE MANUEL SERVICE N'A PAS ÉTÉ CONSULTÉ ET COMPRIS.**
- **LE NON-RESPECT DE CET AVERTISSEMENT PEUT ENTRAÎNER CHEZ LE TECHNICIEN, L'OPÉRATEUR OU LE PATIENT DES BLESSURES DUES À DES DANGERS ÉLECTRIQUES, MÉCANIQUES OU AUTRES.**

WARNUNG

- **DIESES KUNDENDIENST–HANDBUCH EXISTIERT NUR IN ENGLISCHER SPRACHE.**
- **FALLS EIN FREMDER KUNDENDIENST EINE ANDERE SPRACHE BENÖTIGT, IST ES AUFGABE DES KUNDEN FÜR EINE ENTSPRECHENDE ÜBERSETZUNG ZU SORGEN.**
- **VERSUCHEN SIE NICHT, DAS GERÄT ZU REPARIEREN, BEVOR DIESES KUNDENDIENST–HANDBUCH NICHT ZU RATE GEZOGEN UND VERSTANDEN WURDE.**
- **WIRD DIESE WARNUNG NICHT BEACHTET, SO KANN ES ZU VERLETZUNGEN DES KUNDENDIENSTTECHNIKERS, DES BEDIENERS ODER DES PATIENTEN DURCH ELEKTRISCHE SCHLÄGE, MECHANISCHE ODER SONSTIGE GEFAHREN KOMMEN.**

AVISO

- **ESTE MANUAL DE SERVICIO SÓLO EXISTE EN INGLÉS.**
- **SI ALGÚN PROVEEDOR DE SERVICIOS AJENO A GEMS SOLICITA UN IDIOMA QUE NO SEA EL INGLÉS, ES RESPONSABILIDAD DEL CLIENTE OFRECER UN SERVICIO DE TRADUCCIÓN.**
- **NO SE DEBERÁ DAR SERVICIO TÉCNICO AL EQUIPO, SIN HABER CONSULTADO Y COMPRENDIDO ESTE MANUAL DE SERVICIO.**
- **LA NO OBSERVANCIA DEL PRESENTE AVISO PUEDE DAR LUGAR A QUE EL PROVEEDOR DE SERVICIOS, EL OPERADOR O EL PACIENTE SUFRAN LESIONES PROVOCADAS POR CAUSAS ELÉCTRICAS, MECÁNICAS O DE OTRA NATURALEZA.**

ATENÇÃO

- **ESTE MANUAL DE ASSISTÊNCIA TÉCNICA SÓ SE ENCONTRA DISPONÍVEL EM INGLÊS.**
- **SE QUALQUER OUTRO SERVIÇO DE ASSISTÊNCIA TÉCNICA, QUE NÃO A GEMS, SOLICITAR ESTES MANUAIS NOUTRO IDIOMA, É DA RESPONSABILIDADE DO CLIENTE FORNECER OS SERVIÇOS DE TRADUÇÃO.**
- **NÃO TENTE REPARAR O EQUIPAMENTO SEM TER CONSULTADO E COMPREENDIDO ESTE MANUAL DE ASSISTÊNCIA TÉCNICA.**
- **O NÃO CUMPRIMENTO DESTE AVISO PODE POR EM PERIGO A SEGURANÇA DO TÉCNICO, OPERADOR OU PACIENTE DEVIDO A‘ CHOQUES ELÉTRICOS, MECÂNICOS OU OUTROS.**

AVVERTENZA

- **IL PRESENTE MANUALE DI MANUTENZIONE È DISPONIBILE SOLTANTO IN INGLESE.**
- **SE UN ADDETTO ALLA MANUTENZIONE ESTERNO ALLA GEMS RICHIEDE IL MANUALE IN UNA LINGUA DIVERSA, IL CLIENTE È TENUTO A PROVVEDERE DIRETTAMENTE ALLA TRADUZIONE.**
- **SI PROCEDA ALLA MANUTENZIONE DELL’APPARECCHIATURA SOLO DOPO AVER CONSULTATO IL PRESENTE MANUALE ED AVERNE COMPRESO IL CONTENUTO.**
- **NON TENERE CONTO DELLA PRESENTE AVVERTENZA POTREBBE FAR COMPIERE OPERAZIONI DA CUI DERIVINO LESIONI ALL’ADDETTO ALLA MANUTENZIONE, ALL’UTILIZZATORE ED AL PAZIENTE PER FOLGORAZIONE ELETTRICA, PER URTI MECCANICI OD ALTRI RISCHI.**

警告

・このサービスマニュアルには英語版しかありません。
・ＧＥＭＳ以外でサービスを担当される業者が英語以外の言語を要求される場合、翻訳作業はその業者の責任で行うものとさせていただきます。
・このサービスマニュアルを熟読し理解せずに、装置のサービスを行わないで下さい。
・この警告に従わない場合、サービスを担当される方、操作員あるいは患者さんが、感電や機械的又はその他の危険により負傷する可能性があります。

注意:

- 本维修手册仅存有英文本。
- 非 GEMS 公司的维修员要求非英文本的维修手册时，客户需自行负责翻译。
- 未详细阅读和完全了解本手册之前，不得进行维修。
- 忽略本注意事项会对维修员，操作员或病人造成触电，机械伤害或其他伤害。

Revision History

Revision	Date	Reason for change
0	April 30, 1999	Initial Release
1	Jan 4, 2000	Incorporate manufacturing changes
2	May 16, 2000	Incorporate manufacturing changes
3	Feb 19, 2004	New Part Information- due to part obsolescence

List of Effected Pages

Pages	Revision	Pages	Revision	Pages	Revision
Title Page	3	1-1 to 1-18	2	7-22 to 7-26	3
GE Logo Page	2	2-1 to 2-14	2	8-1 to 8-38	2
1 - 2	2	3-1 10 3-22	2	9-1 to 9-68	2
Revision History	3	4-1 to 4-22	2	10-1 to 10-22	2
Table of Content	2	5-1 to 5-32	2	Index-1 to Index-6	2
List Of Illustrations	2	6-1 to 6-68	2		
List Of Tables	2	7-1 to 7-21	2		

Intentionally blank

TABLE OF CONTENTS

SECTION		PAGE
TABLE OF CONTENTS		
LIST OF ILLUSTRATIONS		iv
LIST OF TABLES		xiv
SECTION 1 – SAFETY		
1–1	INTRODUCTION	1– 2
1–2	IMPORTANT CONVENTIONS	1– 3
1–3	SAFETY CONSIDERATIONS	1– 7
1–4	EMC, EMI, AND ESD	1– 16
1–5	CUSTOMER ASSISTANCE	1– 18
SECTION 2 – PREINSTALLATION		
2–1	PURPOSE OF SECTION	2–2
2–2	GENERAL INFORMATION	2–2
2–3	FACILITY NEEDS	2–6
2–4	ELECTRICAL NEEDS	2–9
2–5	DICOM OPTION PRE–INSTALLATION REQUIREMENTS	2–10
	Sales/Service Preinstallation Checklist	2–13
SECTION 3 – INSTALLATION		
3–1	PURPOSE OF SECTION	3–2
3–2	GENERAL INFORMATION	3–2
3–3	RECEIVING AND UNPACKING THE EQUIPMENT	3–6
3–4	INSPECTING THE FACILITY	3–8
3–5	PREPARING THE UNIT FOR INSTALLATION	3–9
3–6	COMPLETING THE INSTALLATION	3–12
3–7	TRANSPORTING THE UNIT	3–21
	Installation Certificate	3–21
SECTION 4 – FUNCTIONAL CHECKS AND SITE LOG		
4–1	PURPOSE OF SECTION	4–2
4–2	GENERAL PROCEDURES	4–3
4–3	FUNCTIONAL CHECKS	4–6
4–4	SITE LOG	4–20
SECTION 5 – SYSTEM OVERVIEW		
5–1	PURPOSE OF SECTION	5–2
5–2	LOGIQ™ 700 DESCRIPTION	5–2
5–3	ACOUSTIC OUTPUT	5–6
5–4	LOGIQ™ 700 CIRCUIT CARDS	5–9
5–5	POWER SYSTEM	5–19

TABLE OF CONTENTS (Continued)

SECTION **PAGE**

SECTION 6 – DIAGNOSTIC SOFTWARE
6–1 INTRODUCTION 6–2
6–2 SERVICE SOFTWARE TOOL DESCRIPTIONS 6–3
6–3 DIAGNOSTICS 6–13
6–4 VIEW LOGS 6–28
6–5 DIAGNOSTIC DESCRIPTIONS 6–41
6–6 LOADING SYSTEM SOFTWARE 6–60
6–7 IMPORTANT TROUBLESHOOTING HINTS 6–67

SECTION 7 – ASSEMBLY
7–1 PURPOSE OF SECTION 7–2
7–2 ACCESS ITEMS 7–3
7–3 FUNCTIONAL ITEMS 7–6
7–4 JUMPERS 7–22

SECTION 8 – SYSTEM PERFORMANCE AND MESSAGES
8–1 PURPOSE OF SECTION 8–2
8–2 MECHANICAL PERFORMANCE 8–3
8–3 POWER PERFORMANCE 8–6
8–4 SYSTEM TIMING PERFORMANCE 8–9
8–5 MONITOR PERFORMANCE 8–10
8–6 IMAGE PERFORMANCE 8–13
8–7 VIDEO OUTPUT PERFORMANCE 8–14
8–8 AUDIO OUTPUT PERFORMANCE 8–17
8–9 LED INDICATORS 8–18
8–10 CONTROL PANEL SELF–TEST 8–22
8–11 SYSTEM MESSAGES 8–27

SECTION 9 – RENEWAL PARTS
9–1 PURPOSE OF SECTION 9–2
9–2 ARRANGEMENT OF THIS SECTION 9–2
9–3 EQUIPMENT MODELS COVERED IN THIS SECTION 9–3
9–4 ABBREVIATIONS/CONVENTIONS USED IN THIS SECTION 9–4
9–5 KITS 9–4
9–6 PACKING CIRCUIT CARDS FOR RESHIPMENT 9–68

SECTION 10 – PLANNED MAINTENANCE
10–1 PURPOSE OF SECTION 10–2
10–2 PLANNED MAINTENANCE (PM) 10–3
10–3 SYSTEM MAINTENANCE 10–5
10–4 PROBE MAINTENANCE 10–12

LIST OF ILLUSTRATIONS

Illustration		Page
1–1	LABELS FOUND ON FRONT OF LOGIQ™ 700	1– 11
1–2	LABEL FOUND ON PERIPHERAL BULKHEAD PANEL	1– 12
1–3	LABELS FOUND ON BACK OF LOGIQ™ 700	1– 13
1–4	LABELS FOUND ON PROBES	1– 14
1–5	LOCATING PART NUMBERS ON CIRCUIT CARD	1– 18
2–1	ENVELOPE DIMENSIONS FOR LOGIQ™ 700	2–3
2–2	RECOMMENDED (14 BY 17 FEET) FLOOR PLAN	2–7
2–3	MINIMAL (8 BY 10 FEET) FLOOR PLAN	2–7
2–4	WORKSHEET FOR DICOM NETWORK INFORMATION	2–11
2–5	WORKSHEET FOR USER NETWORK PREFERENCES	2–12
3–1	PLOS SCREEN – EXAMPLE	3–3
3–2	PIN CONFIGURATIONS FOR 120 VAC SITE OUTLET	3–8
3–3	TYPICAL NEON OUTLET TESTER	3–8
3–4	LOCATION OF RATING PLATE	3–9
3–5	ISOLATION TRANSFORMER TERMINAL BLOCK SHOWING SOME POSSIBLE WIRE, SHUNT, AND JUMPER CONNECTIONS	3–10
3–6	RESISTANCE TEST OF UNIT GROUNDING	3–11
3–7	LOCATIONS OF SEISMIC ANCHORS AND OPTION RATING PLATES	3–12
3–8	DIAGRAM OF TEST SETUP FOR CHASSIS LEAKAGE CURRENT	3–13
3–9	REAR VIEW OF UNIT SHOWING CIRCUIT BREAKERS AND GROUND STUD	3–14
3–10	DIAGRAM OF TEST SETUP FOR PROBE LEAKAGE CURRENT	3–15
3–11	DIAGRAM OF TEST SETUP FOR PERIPHERAL LEAKAGE CURRENT	3–18
4–1	ARCHIVING AND LOADING PRESETS	4–5
4–2	B FLOW IMAGE	4–8
4–3	M COLOR FLOW IMAGE	4–8
4–4	B–MODE DISPLAY SCREEN	4–9
4–5	ACTUAL B IMAGE	4–11
4–6	M–MODE DISPLAY SCREEN	4–13
4–7	ACTUAL M IMAGE	4–13
4–8	B PLUS COLOR MODE DISPLAY SCREEN	4–15
4–9	ACTUAL 2D COLOR FLOW IMAGE	4–15
4–10	PW DOPPLER DISPLAY SCREEN	4–17
4–11	ACTUAL PW IMAGE	4–17
5–1	LOCATION OF MAJOR COMPONENTS WITHIN LOGIQ™ 700	5–2
5–2	SYSTEM DATA PATH	5–3
5–3	BASIC SYSTEM BLOCK DIAGRAM	5–4
5–4	DETAILED SYSTEM BLOCK DIAGRAM	5–8
5–5	FRONT END CIRCUIT CARDS IN CARD CAGE	5–10
5–6	BE CIRCUIT CARDS AND SUBSYSTEMS	5–13
5–7	CIRCUIT CARDS AND INTERCONNECTIONS WITHIN OPERATOR CONTROL PANEL	5–17
5–8	LOGIQ™ 700 POWER SYSTEM	5–20
5–9	DIGITAL POWER SUPPLY (PS1) POWER DISTRIBUTION	5–23
5–10	TEMPERATURE SENSOR FOR POWER SUPPLIES	5–25
5–11	LOW NOISE/HIGH VOLTAGE POWER SUPPLY (PS2) POWER DISTRIBUTION ON 2222028 BACKPLANE	5–26
5–12	LOW NOISE/HIGH VOLTAGE POWER SUPPLY (PS2) POWER DISTRIBUTION ON 2250654 BACKPLANE	5–27

LIST OF ILLUSTRATIONS (Continued)

Illustration		Page
5–13	PHYSICAL LOCATIONS OF POWER POINTS ON 2222028 BACKPLANE (UNITS WITH HV FILTER ASSEMBLY)	5–28
5–14	PHYSICAL LOCATIONS OF POWER POINTS ON 2250654 BACKPLANE (UNITS WITHOUT HV FILTER ASSEMBLY)	5–28
5–15	CONTROL PANEL INTERCONNECTS	5–30
5–16	PROBE POWER POINTS ON XDIF CONNECTOR	5–31
6–1	TEST PATH FOR VISUAL CHANNEL ALIVE	6–3
6–2	SECTOR IMAGES FOR 128 ELEMENTS	6–4
6–3	DIAGRAM OF EXTERNAL VIDEO INPUTS TESTS	6–5
6–4	CONNECTION POINTS FOR EXTERNAL VIDEO INPUTS	6–6
6–5	DIAGRAM OF VIDEO TEST PATTERNS	6–7
6–6	FIRST BRIGHTNESS AND CONTRAST VIDEO TEST PATTERN	6–9
6–7	SECOND BRIGHTNESS AND CONTRAST VIDEO TEST PATTERN	6–10
6–8	PURE COLORS VIDEO TEST PATTERNS	6–10
6–9	LINEARITY VIDEO TEST PATTERN	6–11
6–10	SMPTE VIDEO TEST PATTERN	6–11
6–11	LINEARITY AND CONVERGENCE VIDEO TEST PATTERN	6–12
6–12	TEXT VIDEO TEST PATTERN	6–12
6–13	PIN ASSIGNMENTS FOR CABLE FROM LOGIQ™ 700 TO PC	6–13
6–14	VT220/PC CONNECTION TO LOGIC™ 700 BULKHEAD	6–16
6–15	ACCESS SCREENS FOR gemsC DIAGNOSTICS	6–18
6–16	LOGIQ™ 700 gemsC TOP LEVEL SCREEN	6–19
6–17	LOGIQ™ 700 gemsC DIAGNOSTIC SCREEN	6–20
6–18	TEST INPUT SCREEN FOR gemsC DIAGNOSTICS	6–21
6–19	LOOPING SUBTEST PROMPT SCREEN FOR gemsC DIAGNOSTICS	6–22
6–20	SELECTING AND STARTING A DIAGNOSTIC TEST	6–23
6–21	SELECTING A CAPTURE LOG FOR DISPLAY	6–24
6–22	CAPTURE LOG EXAMPLE	6–24
6–23	SCREENS FOR EXITING gemsC DIAGNOSTICS	6–26
6–24	VIEW LOGS DROPDOWN MENU FOR gemsC	6–28
6–25	ERROR LOG FILE SCREEN	6–29
6–26	PHYSICAL LOCATION OF TEMPERATURE SENSORS WITHIN UNIT	6–30
6–27	BLOCK DIAGRAM OF TEMPERATURE SENSING CIRCUITS	6–30
6–28	TEMPERATURE LOG EXAMPLE	6–31
6–29	EXAMPLE OF PAGE 2 OF SYSTEM CONFIGURATION LOG	6–37
6–30	TD CHANNEL ASSIGNMENTS	6–55
6–31	CALIBRATION DIAGNOSTIC ELEMENTS	6–56
6–32	CALIBRATION LOG EXAMPLE	6–57
6–33	LOCATION OF RATING PLATES FOR UPGRADES AND OPTIONS	6–64
7–1	AIR FILTER, SIDE COVER, AND REAR COVER REMOVAL	7–3
7–2	CONTROL PANEL AND UPPER AND LOWER FRONT COVER REMOVAL	7–4
7–3	REAR BUMPER REMOVAL	7–5
7–4	SIDE BUMPER REMOVAL	7–5
7–5	LOCATION OF FUSES ON MC/PIA BOARD	7–7
7–6	LOCATION OF CIRCUIT BREAKERS	7–8
7–7	SSR	7–9
7–8	ISOLATION TRANSFORMER REMOVAL	7–10

LIST OF ILLUSTRATIONS (Continued)

Illustration **Page**

7–9 POWER SUPPLY REMOVAL 7–11
7–10 POWER SUPPLY WIRING 7–12
7–11 ASSEMBLY OF AUDIO COMPONENTS 7–13
7–12 RF CABLE CONNECTIONS TO TD 7–14
7–13 RF CABLE CONNECTIONS TO XDIF 7–15
7–14 OPERATOR PANEL REMOVAL 7–16
7–15 ROUTING CABLES FOR OPERATOR PANEL THROUGH GAS CYLINDER ASSEMBLY . . . 7–17
7–16 UNDERSIDE OF OPERATOR PANEL SHOWING CABLE ROUTING AND ATTACHING HARDWARE 7–18
7–17 TASKLIGHT AND TASKLIGHT FIBER OPTIC CABLE REMOVAL 7–19
7–18 MONITOR REMOVAL 7–20
7–19 TD BOARD INSTALLATION 7–21
7–20 SSR JUMPER INSTALLATION 7–22
7–21 JUMPER INSTALLATION ON MC/PIA BOARD 7–23
7–22 IACK JUMPER INSTALLATION ON BACKPLANE 7–23
7–23 JUMPER INSTALLATION ON SEAGATE HARD DRIVE 7–24
7–24 JUMPER INSTALLATION ON FUJITSU M2513A MODS 7–24
7–25 JUMPER INSTALLATION ON FUJITSU MCC3064SS AND MCF3064SS MODS 7–25
7–26 JUMPER INSTALLATION ON XDIF 7–25

8–1 BRAKE ADJUSTMENT OF FRONT WHEEL ASSEMBLY 8–3
8–3 SYSTEM POWER AT POWER SUPPLIES 8–6
8–4 SYSTEM POWER DESTINATIONS ON BACKPLANES WITH 2222028 PART NUMBER 8–7
8–4 SYSTEM POWER DESTINATIONS ON BACKPLANES WITH 2250654 PART NUMBER 8–7
8–6 SCSI POWER SOURCES AND DESTINATIONS 8–9
8–7 40 MHZ AND 10 MHZ CLOCK TEST POINTS 8–9
8–8 LOCATION OF MONITOR CONTROLS 8–10
8–9 VIDEO SIGNAL CONNECTOR LOCATIONS 8–11
8–10 TEST PATTERNS USED TO ADJUST BRIGHTNESS FOR MR IMAGING 8–12
8–11 LOCATION OF VIDEO OUTPUT SIGNALS AT UNIT BULKHEAD 8–14
8–12 CHROMA VIDEO SIGNAL 8–14
8–13 LUMA (Y) OR B/W VIDEO SIGNAL 8–15
8–14 COMPOSITE VIDEO SIGNAL 8–15
8–15 RGB VIDEO SIGNAL 8–15
8–16 INTERLACED BLANKING PERIOD 8–15
8–17 COMBINED H AND V SYNC TO MONITOR AND BULKHEAD 8–16
8–18 LOCATIONS OF AUDIO SIGNAL INTERFACES 8–17
8–19 LED LOCATIONS IN CARD CAGE 8–18
8–19 XY (SCAN CONVERSION) LEDS 8–17
8–21 SCAN SEQUENCER (SCAN CONTROL) LEDS 8–19
8–22 MC AND TGC LED’S 8–20
8–23 SOFTKEY DISPLAY DIAGNOSTIC SCREEN – TGC POTS 8–22
8–24 DIAGNOSTIC SCREEN – ROTARY ENCODERS 8–23
8–25 DIAGNOSTIC SCREEN – TRACKBALL 8–23
8–26 DIAGNOSTIC SCREEN – KEYBOARD KEYS 8–24
8–27 DIAGNOSTIC SCREEN – SWITCHES 8–25
8–28 ENGLISH LANGUAGE CONTROL PANEL 8–26

LIST OF ILLUSTRATIONS (Continued)

Illustration		Page
9–1	PROBES AND RELATED ITEMS	9–5
9–2	SIDE COVERS, REAR COVERS, AND MONITOR ASSEMBLY	9–8
9–3	MONITOR ASSEMBLY BREAKDOWN	9–10
9–4	FRONT COVERS, XDIF, AND OPERATOR CONTROL PANEL	9–12
9–5	OPERATOR CONTROL PANEL BREAKDOWN	9–14
9–6	UPPER OPERATOR PANEL BREAKDOWN	9–16
9–7	LOWER OPERATOR PANEL BREAKDOWN	9–18
9–8	BACKPLANE	9–22
9–9	CARD CAGE AND CIRCUIT CARDS	9–24
9–10	MUFFIN FAN ASSEMBLY	9–26
9–11	MUFFIN FAN ASSEMBLY BREAKDOWN	9–27
9–12	REAR BUMPER, POWER SUPPLIES, AND BULKHEAD	9–28
9–13	POWER SUPPLY ASSEMBLIES	9–30
9–14	BULKHEAD ASSEMBLY BREAKDOWN	9–32
9–15	PERIPHERAL BULKHEAD ASSEMBLY BREAKDOWN	9–34
9–16	HARD DRIVE AND MOD	9–36
9–17	TEMPERATURE SENSORS	9–38
9–18	ISOLATION TRANSFORMER AND HIGH VOLTAGE CAPACITOR ASSEMBLY	9–40
9–19	AC WIRING	9–42
9–20	AC POWER DISTRIBUTION ASSEMBLY	9–44
9–21	RF SHIELDS AND GASKETS	9–46
9–22	FRAME ASSEMBLY	9–48
9–23	FRAME ASSEMBLY	9–50
9–24	FRAME ASSEMBLY	9–52
9–25	GAS SPRING ASSEMBLY BREAKDOWN	9–54
9–26	FRONT WHEEL ASSEMBLY BREAKDOWN	9–56
9–27	PACKING A CIRCUIT CARD FOR SHIPMENT	9–68
10–1	POWER CORD REMINDERS	10–10
10–2	UNIT AND POWER SUPPLY FILTER LOCATIONS	10–10
10–3	IMMERSING A PROBE	10–14
10–4	IMMERSING AN ENDOCAVITARY PROBE	10–15
10–5	IMMERSING AN INTRA–OPERATIVE PROBE	10–15

LIST OF TABLES

Table		Page
1–1	HAZARD ICONS	1– 4
1–2	PRODUCT ICONS	1– 5
1–3	RULES FOR PREVENTING OR REDUCING ESD DAMAGE	1– 17
1–4	PHONE NUMBERS FOR CUSTOMER ASSISTANCE	1– 18
2–1	PHYSICAL DIMENSIONS OF LOGIQ™ 700	2–2
2–2	EMI PREVENTION/ABATEMENT	2–4
2–3	LOGIQ™ 700 ENVIRONMENTAL LIMITS	2–8
2–4	WAITING TIME PRIOR TO OPERATING A UNIT THAT ARRIVES TOO HOT OR COLD	2–8
2–5	LOGIQ™ 700 POWER RATING CONFIGURATIONS	2–9
3–1	TOOLS NEEDED FOR INSTALLATION	3–4
3–2	WIRE, SHUNT, AND JUMPER CONNECTIONS TO ISOLATION TRANSFORMER	3–10
3–3	DATA SHEET FOR CHASSIS LEAKAGE CURRENT TEST	3–14
3–4	DATA SHEET FOR TYPE BF PROBE LEAKAGE CURRENT TEST	3–17
3–5	DATA SHEET FOR TYPE CF PROBE LEAKAGE CURRENT TEST	3–17
3–6	DATA SHEET FOR PERIPHERAL LEAKAGE CURRENT TEST	3–19
3–7	TROUBLESHOOTING PROCEDURES FOR LEAKAGE CURRENT PROBLEMS	3–20
4–1	POWER–ON/BOOT–UP TESTS	4–3
5–1	SUBSYSTEM SUMMARY	5–5
5–2	ACOUSTIC POWER INDICATIONS ON IMAGE	5–7
5–3	MODE AFFECTED BY AO CHANGE	5–7
5–4	EFFECTS OF PANEL CONTROLS ON ACOUSTIC POWER	5–7
5–5	FUNCTIONS OF FE CIRCUIT CARDS IN CARD CAGE	5–11
5–6	FUNCTIONS OF OTHER FE CIRCUIT CARDS	5–12
5–7	FUNCTIONS OF KERNEL CIRCUIT CARDS	5–14
5–8	FUNCTIONS OF MID PROCESSOR CIRCUIT CARDS	5–15
5–9	FUNCTIONS OF SCAN CONVERTER CIRCUIT CARDS	5–16
5–10	FUNCTIONS OF CIRCUIT CARDS IN OPERATOR CONTROL PANEL	5–18
5–11	DESCRIPTION OF DIGITAL DC POWER SUPPLY (PS1) OUTPUT SPECIFICATIONS	5–21
5–12	DESCRIPTION OF DIGITAL DC POWER SUPPLY (PS1) CONTROL SIGNALS	5–22
5–13	PS2 OUTPUT SPECIFICATIONS	5–24
5–14	DESCRIPTION OF LOW NOISE/HIGH VOLTAGE POWER SUPPLY CONTROL SIGNALS	5–25
5–15	CONTROL PANEL POWER USAGE	5–30
6–1	TESTS IN VISUAL CHANNEL ALIVE	6–4
6–2	PORTION OF VIDEO I/O CABLE USED DURING EXTERNAL VIDEO INPUTS TESTS	6–5
6–3	PORTION OF VIDEO I/O CABLES USED BY VIDEO TEST PATTERNS	6–8
6–4	KEYSTROKE COMMANDS FOR gemsC DIAGNOSTICS	6–15
6–5	TEMPERATURE RELATED MESSAGES	6–31
6–6	TD CHANNEL NUMBER ASSIGNMENTS	6–54
6–7	POSSIBLE ACTIONS IF SYSTEM ABORTS CALIBRATION	6–58
6–8	POSSIBLE ACTIONS IF SYSTEM FAILS CALIBRATION	6–58
6–9	CHANNEL/COMPONENT CORRELATIONS FOR BEAMFORMER	6–59
6–10	OB DEFAULT COMMENTS FOR LANGUAGES OTHER THAN ENGLISH	6–60
6–11	RECORDING TABLE FOR USER PREFERRED OB COMMENT	6–60

LIST OF TABLES (Continued)

Table		Page
7–1	LOGIQ™ 700 FUSE COMPLEMENT	7–6
7–2	LOGIQ™ 700 COMPONENTS WITH JUMPERS (OR DIP SWITCHES)	7–22
8–1	MONITOR TROUBLESHOOTING	8–10
8–2	DESCRIPTIONS OF SYSTEM ERROR MESSAGES	8–28
9–1	PROBES AND RELATED ITEMS	9–5
9–2	SIDE COVERS, REAR COVERS, AND MONITOR ASSEMBLY	9–9
9–3	MONITOR ASSEMBLY BREAKDOWN	9–11
9–4	FRONT COVERS, XDIF, AND OPERATOR CONTROL PANEL	9–13
9–5	OPERATOR CONTROL PANEL BREAKDOWN	9–15
9–6	UPPER OPERATOR PANEL BREAKDOWN	9–17
9–7	LOWER OPERATOR PANEL BREAKDOWN	9–19
9–8	BACKPLANE	9–23
9–9	CARD CAGE AND CIRCUIT CARDS	9–25
9–10	MUFFIN FAN ASSEMBLY	9–26
9–11	MUFFIN FAN ASSEMBLY BREAKDOWN	9–27
9–12	REAR BUMPER, POWER SUPPLIES, AND BULKHEAD	9–29
9–13	POWER SUPPLY ASSEMBLIES	9–31
9–14	BULKHEAD ASSEMBLY BREAKDOWN	9–33
9–15	PERIPHERAL BULKHEAD ASSEMBLY BREAKDOWN	9–35
9–16	HARD DRIVE AND MOD	9–37
9–17	TEMPERATURE SENSORS	9–39
9–18	ISOLATION TRANSFORMER AND HIGH VOLTAGE CAPACITOR ASSEMBLY	9–41
9–19	AC WIRING	9–43
9–20	AC POWER DISTRIBUTION	9–45
9–21	RF SHIELDS AND GASKETS	9–47
9–22	FRAME ASSEMBLY	9–49
9–23	FRAME ASSEMBLY	9–51
9–24	FRAME ASSEMBLY	9–53
9–25	GAS SPRING ASSEMBLY BREAKDOWN	9–55
9–26	FRONT WHEEL ASSEMBLY BREAKDOWN	9–57
9–28	RENEWAL PARTS KITS	9–59
9–29	CONTENTS OF KIT 1 (2113295)	9–60
9–30	CONTENTS OF KIT 2 (2113295–2)	9–60
9–31	CONTENTS OF KIT 3 (2113295–3)	9–61
9–32	CONTENTS OF KIT 4 (2113295–4)	9–61
9–33	CONTENTS OF KIT 5 (2113295–5)	9–62
9–34	CONTENTS OF KIT 6 (2113295–6)	9–62
9–35	CONTENTS OF KIT 7 (2113295–7)	9–63
9–36	CONTENTS OF KIT 8 (2113295–8)	9–63
9–37	CONTENTS OF KIT 9 (2113295–9)	9–64
9–38	CONTENTS OF KIT D	9–64
9–39	CONTENTS OF KIT K (2122406–5)	9–65
9–40	CONTENTS OF KIT M (2122406–3)	9–65
9–41	CONTENTS OF KIT P (2122406–6)	9–66
9–42	CONTENTS OF KIT Q (2243577)	9–66
9–43	OTHER KITS AND TOOLS	9–67
10–1	TOLL–FREE PHONE NUMBERS FOR GEMS SUPPORT CENTERS	10–3
10–2	TOOL REQUIREMENTS FOR PLANNED MAINTENANCE	10–4

SECTION 1 – SAFETY

TABLE OF CONTENTS

SECTION	TITLE	PAGE
1–1	INTRODUCTION	1– 2
1–1–1	Purpose of Service Manual	1– 2
1–1–2	Purpose of Section	1– 2
1–1–3	Purpose of Operator Manual	1– 2
1–2	IMPORTANT CONVENTIONS	1– 3
1–2–1	Conventions Used in Book	1– 3
1–2–2	Standard Hazard Icons	1– 4
1–2–3	Product Icons	1– 5
1–3	SAFETY CONSIDERATIONS	1– 7
1–3–1	Human Safety	1– 7
1–3–2	Mechanical Safety	1– 8
1–3–3	Electrical Safety	1– 9
1–3–4	Label Locations	1– 11
1–3–5	Lockout/Tagout Procedure	1– 15
1–4	EMC, EMI, AND ESD	1– 16
1–4–1	Electromagnetic Compatibility (EMC)	1– 16
1–4–2	CE Compliance	1– 17
1–4–3	Electrostatic Discharge (ESD) Prevention	1– 17
1–5	CUSTOMER ASSISTANCE	1– 18

ATTENTION **There are now four hardware versions of the LOGIQ 700 in the field. This Manual covers the latest version (Model Numbers 2184000 through (n)). Review the Safety and Parts Sections of this manual for detailed information about this hardware version.**

1–1 INTRODUCTION

Note

Read and understand all warnings in this Safety Section.

1–1–1 Purpose of Service Manual

This service manual provides installation and servicing of LOGIQ™ 700. Study this service manual before installing or repairing a LOGIQ™ 700 system. Store the service manual near the unit for easy reference. Review the contents periodically for warnings, safety precautions, maintenance requirements, and proper procedures.

1–1–2 Purpose of Section

This section describes important issues related to safely servicing this ultrasound machine. The service provider must read and understand all the information presented here before installing or servicing a unit.

1–1–3 Purpose of Operator Manual

The Operator Manual should be fully read and understood before operating the LOGIQ™ 700 and also kept near the unit for quick reference.

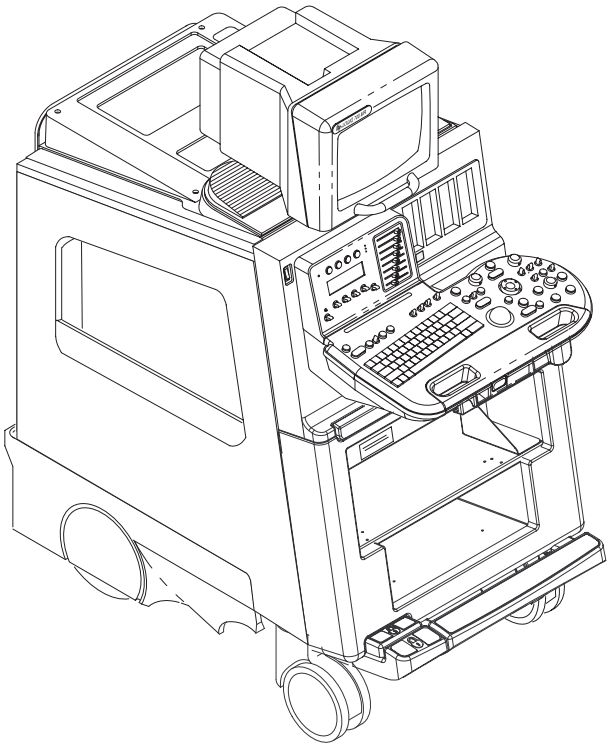

1–2 IMPORTANT CONVENTIONS

1–2–1 Conventions Used in Book

Model Designations. There are four basic models of the LOGIQ™ 700. This manual covers only the V4 version (2184000 series model numbers). The V1, V2, and V3 versions are covered in Direction 46–030402.

Icons. Pictures, or icons, are used wherever they will reinforce the printed message. The icons, labels and conventions used on the product and in the service information are described in this chapter.

Safety Precaution Messages. Various levels of safety precaution messages may be found on the equipment and in the service information. The different levels of concern are identified by a flag word that precedes the precautionary message. Known or potential hazards are labeled in one of three ways:

DANGER **Danger is used to indicate the presence of a hazard that will cause severe personal injury or death if the instructions are ignored.**

WARNING **Warning is used to indicate the presence of a hazard that can cause severe personal injury and property damage if instructions are ignored.**

CAUTION **Caution is used to indicate the presence of a hazard that will or can cause minor personal injury and property damage if instructions are ignored.**

Notes. Notes are used to provide important information about an item or a procedure. Be sure to read the notes: the information contained in a note can often save you time or effort.

Diagram Conventions. Conventions used in the diagrams within the service manuals include:

Circuit blocks on circuit cards that reside in the Front End (FE) are shaded in dark gray.

Circuit blocks on circuit cards that reside in the Back End (BE) are shaded in light gray.

Circuit blocks or parts that are optional are shaded with angled stripes.

A3–P2–A32 Designators are used to describe physical location and component types. In the example at the left: A3 is the slot, P2 is the connector, A32 is the pin.

FECT_ALM_40P0–P Signal names usually indicate their source and destination. The signal name shown originates on the FECT board and is provided to the Acoustic Line Memory (ALM). When a signal is delivered to a part, and the part does not currently use that signal, the signal's name is listed but a line is drawn through the name.

1–2–2 Standard Hazard Icons

Potential people hazards are indicated in the service and operating information by the icons shown and defined in Table 1–1.

TABLE 1–1
HAZARD ICONS

Icon	Definition	Location
Biological Hazard	• Possible infection due to handling contaminated equipment. • Patient/user injury or adverse reaction to contact materials.	• Cleaning and care instructions • Sheath and glove guidelines
Electrical Hazard –or–	• Electrical shock hazard to patient, operator, or service person. • Electrical micro-shock to patient, e.g., ventricular fibrillation initiated.	• Covers removed • Probe handling • Patient connections • Back panel connections • Peripherals
Moving Hazard	• Console, accessories or optional storage devices could fall on patient, operator, or service representative. • Collision with persons or objects could result in injury while maneuvering or transporting the system. • Injury while moving or lifting the console.	• On unit • Moving unit instructions • Raising unit with jack screws
Acoustic Output Hazard	• Injury or tissue damage from ultrasound radiation.	• System performance check
Smoke & Fire Hazard	• Injury or adverse reaction from fire or smoke.	• Replacing fuses • Mains supply
Non–Ionizing Radiation	• Failure, erratic operation or output error due to RF interference to or from other electrically operated equipment.	• RF leaks • Shields and enclosures • Grounding

1–2–3 Product Icons

These icons and labels that can be found on the LOGIQ™ 700 are shown and defined in Table 1–2. The probe interface (XDIF) is rated BF on all consoles.

TABLE 1–2
PRODUCT ICONS (Sheet 1 of 2)

Label	Definition	Location
Rating Plate *Made in the USA*	Reports important manufacturing information about the equipment. Device ID numbers and electrical ratings	• Rear of unit, near AC cord • Under monitor • On each probe
Certification label *meets our standards*	Laboratory logo or labels denoting conformance with industry safety standards such as UL, CSA, or IEC.	• Rear of unit • Under front of monitor
	This precaution is intended to prevent injury that may result if only one person attempts to move the unit considerable distances or on an incline due to the weight of the unit.	• Rear of unit
	Equipment **Type BF** (man in the box symbol) IEC 878-02-03 indicates B Type equipment having even more electrical isolation than standard Type B because it is intended for intimate patient contact.	• Near XDIF connectors • Non-surgical probe • Rear of unit
	Equipment **Type CF** (heart in the box symbol) IEC 878-02-05 indicates equipment having a high degree of protection, electrical isolation, suitable for direct cardiac contact.	• Surgical probe • ECG Patient Leads
CE 0459	The CE Mark of Conformity indicates this machine conforms with the Council Directive 93/42/EEC	• Rear of unit
 CISPR 11 / EN 55011 CLASS: A GROUP: 1 CLASSE: A GROUPE: 1	CLASS A means the machine is intended for commercial use. CLASS B means the machine is for residential use. GROUP 2 means the machine intentionally emits Radio Frequency. GROUP 1 means it uses RF internally.	• Rear of unit
	The LOGIQ™ 700 is not designed for use near flammable anesthetic gases.	• Rear of unit

TABLE 1–2
PRODUCT ICONS (Sheet 2 of 2)

Label	Definition	Location
I	**ON** icon means pressing the switch at this end will apply AC power to the unit. On this unit, it will also boot the software.	• Front of unit: On/Standby switch
⏻	**STANDBY** icon means pressing the switch at this end will remove AC power to the unit *after the solid state relay*, **but up to that point AC power is still present.** **You must disconnect the power cord or set the MAINS circuit breaker, CB1, off which is all the way down, to disconnect AC power to unit.**	• Front of unit: On/Standby switch
O	**OFF** icon indicates the switch side that removes AC power	• AC circuit breaker (CB1)
⚡	Caution – Electrical shock hazard	• Behind cover trim to warn that electrical power inside all covers is dangerous
⚠	Refer to detailed instructions (Service Manual or instructions for use)	• Rear cover • Bulkhead • Top edge of lower front cover under trim guard • On frame in three places
	This label warns that electronic part failure is possible due to damage caused by dissipation of large electrical potential differences. It warns you to practice ESD prevention. See page 1– 17.	• On electronic parts • Parts handling, packaging, servicing instructions
	This label is a reminder to the service person that the linear bearing that drives the control panel up and down is under pressure and should be blocked **when the gas spring is removed**.	• On the XDIF assembly near the gas spring
~	Indicates Alternating Current (AC)	• Product schematics • Peripheral back panels
⏚	Indicates protective earth (Safety Ground)	• AC distribution panel • Product schematics
⏚	Indicates an earth GROUND potential.	• Product schematics • Peripherals
	Indicates EQUIPOTENTIALITY (Additional Protective earth connection)	• Rear of unit

1–3 SAFETY CONSIDERATIONS

1–3–1 Human Safety

Biological Hazard

DANGER **Neurological procedures must NOT be done on patients with Creutzfield–Jacob disease because there is no way to adequately sterilize/disinfect a probe that has been used this way.**

WARNING **Neurological procedures must be and intraoperative procedures should be done with the use of legally marketed, sterile, pyrogen free probe sheaths.**

WARNING **Probes used during neurological surgery must NOT be sterilized/disinfected with liquid chemical sterilants because of the possibility of neuro toxic residues remaining on the probe.**

CAUTION **Do not handle soiled or contaminated equipment. Illness or infection may result. Probes and related accessories must be cleaned and disinfected according to the user instructions before servicing.**

Acoustic Output Hazard

CAUTION **The ultrasound energy from this system can produce heat and mechanical injury in tissue when operated at maximum acoustic power settings. This system conforms to AIUM, NEMA, and FDA standards for output display and control. It is capable of producing output levels higher than older abdominal and general purpose systems. To avoid possible injury, the operator must become familiar with all system controls and, in particular, the operation of the acoustic output control and display.**

Note

Refer to the User’s Manual for complete user instructions.

1–3–2 Mechanical Safety

DANGER **Should you need to replace a rear wheel, remove the complete wheel assembly from the unit and do not disassemble. The rear wheel assembly has two springs. If the wrong screws are removed, the springs can cause the assembly to disintegrate with explosive force.**

WARNING **When the unit is raised for a repair or moved along any incline, use extreme caution since it may become unstable and tip over if positioned at angles greater than 10°.**

WARNING **Ultrasound probes are highly sensitive medical instruments that can easily be damaged by improper handling. Use care when handling and protect from damage when not in use. DO NOT use a damaged or defective probe. Failure to follow these precautions can result in serious injury and equipment damage.**

CAUTION **The LOGIQ™ 700 weighs approximately 237 kg (522 lbs). Care must be used when moving it or replacing its parts. Failure to follow the precautions listed below could result in injury, uncontrolled motion and costly damage. ALWAYS:**

Be sure the pathway is clear.

Use slow, careful motions.

Use two people when moving on inclines or lifting more than 23 kg (50 lb).

Note

Special care should be taken when transporting the unit in a vehicle:

Secure the unit in an upright position.

DO NOT use the Control Panel as an anchor point.

Place the probes in their carrying case.

Eject any Magneto Optical Drive (MOD) disk from the MOD.

CAUTION **The control panel can be elevated by pressing the actuator button that pulls down the top bracket of the gas spring that places the linear bearing under pressure in the upward direction. Take care when you activate this gas spring. You could be hit by the panel or hurt your hand by upward movement of the linear bearing after the panel is removed and the spring pressure is released. Take care when you repair the elevation assembly.**

CAUTION **Keep the heat venting holes on the monitor unobstructed to avoid overheating of the monitor.**

1–3–3 Electrical Safety

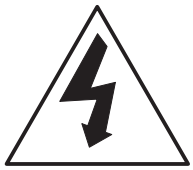

DANGER **Only qualified service personnel should remove any covers or panels. Electrical hazards exists at several points inside including the AC distribution assembly, on the backplane, two power supplies, isolation transformer, and circuit boards. Become thoroughly familiar with all hazardous voltages and high current levels to avoid accidental contact.**

WARNING **High current power supplies even at 5 volts can cause welding of leads, jewelry or other conductive materials.**

Safe Practices. There are additional rules to protect the service person, operator and patient from exposure to dangerous electric power.

- Only connect the unit to a properly grounded, hospital grade power outlet. DO NOT use a three to two prong adapter. This defeats safety grounding.
- To prevent dangerous leakage currents, DO NOT use an extension cord or non–listed peripherals that have not been certified.
- When ESD protection is needed (replacing boards and drives), the service person should be trained in the electrical hazards of this unit, wear the ESD wrist strap and leave the unit plugged to maintain ground.

CAUTION **If you connect the LOGIQ™ 700 to a network using the Bulkhead Ethernet connection ensure that the network provides proper isolation. The LOGIQ™ 700 has stricter isolation requirements than computers.**

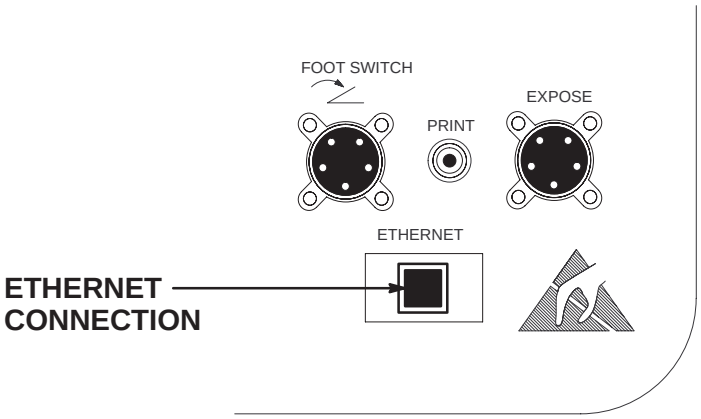

1–3–3 Electrical Safety (Continued)

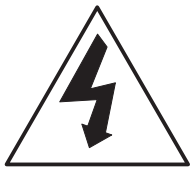

WARNING

Ultrasound transducers can be easily damaged by improper handling. Failure to follow these precautions can result in serious injury and equipment damage.

Probes. A damaged probe could injure someone if its internal parts contact a person through a conductive solution or a break in the isolating material. Therefore:

- **DO NOT** immerse a probe into any liquid beyond the level indicated by the immersion level diagram shown on its care card and the operators manual.
- **DO NOT** immerse a probe into any solution containing acetone, alcohol, bleach, detergent, iodine, or hydrogen peroxide because these can break down its isolation. Avoid gels containing mineral oil or lanolin.
- **DO NOT** drop probes or subject them to other types of mechanical shock or impact. Degraded performance or damage such as cracks or chips in the housing may result.
- **DO NOT** kink, tightly coil, or apply excessive force on the probe cable. Insulation failure may result.
- Inspect the probe before and after each use for damage or degradation to the housing, strain relief, lens, and seal. A thorough inspection should be conducted during the cleaning process.
- Perform electrical current leakage tests on a routine basis to check for cracks or other small defects.
- Avoid storage or cleaning temperature above 60°C (140°F).

1–3–4 Label Locations

There are a number of labels on the LOGIQ™ 700. These labels provide important information. If the labels are worn or missing, new labels should be ordered and installed. Illustrations 1–1 through 1–4 show these labels and their locations.

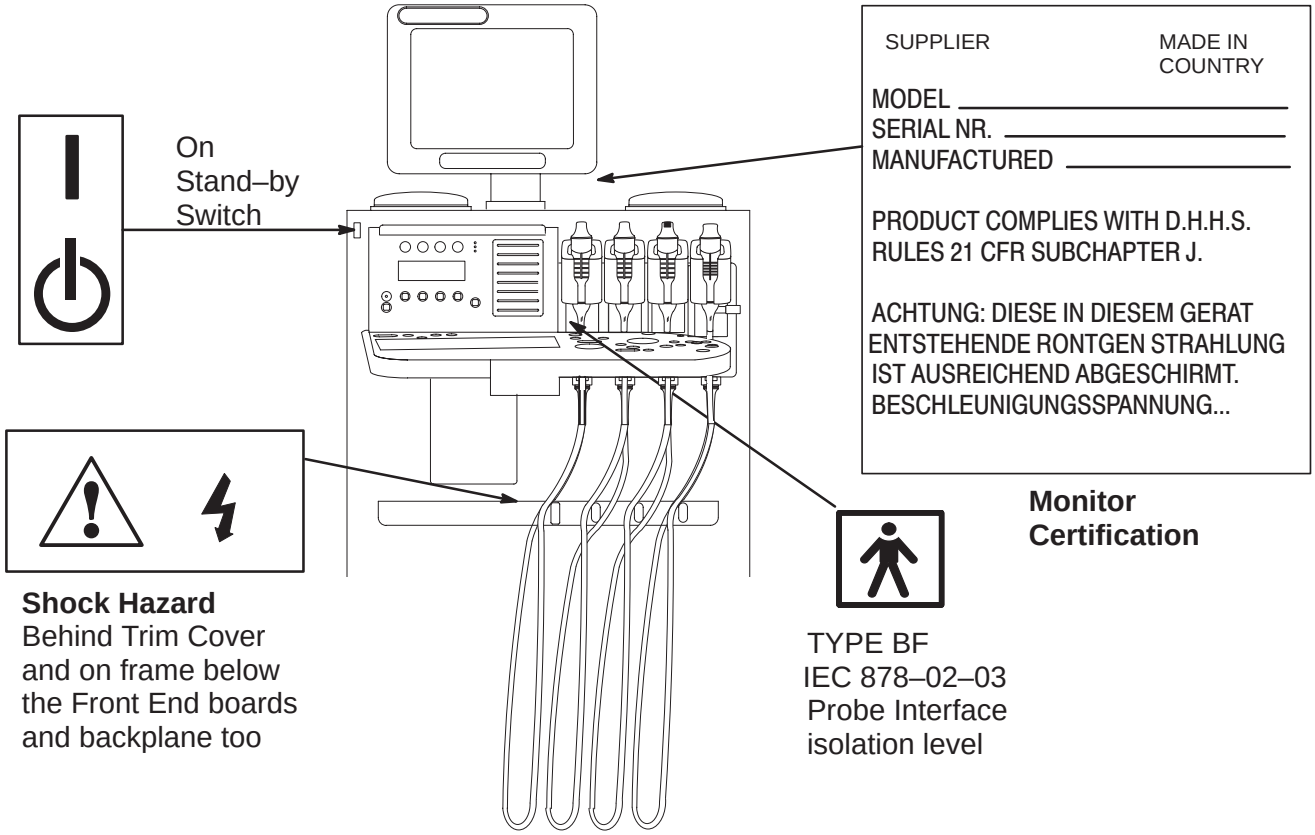

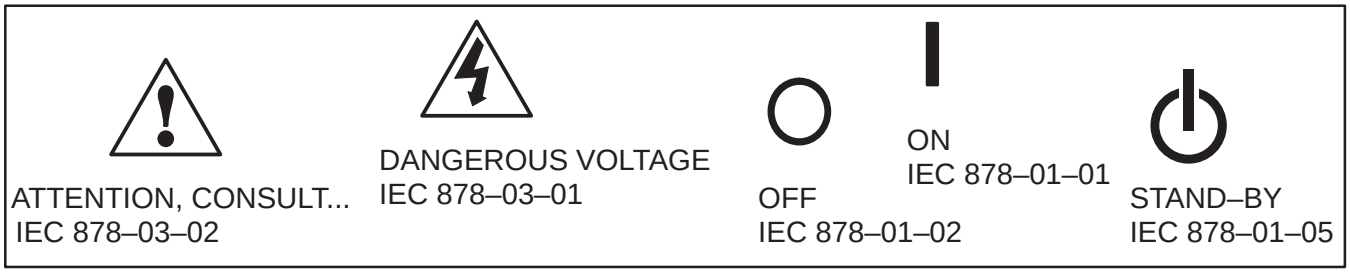

LABELS FOUND ON FRONT OF LOGIQ™ 700
ILLUSTRATION 1–1

1–3–4 Label Locations (Continued)

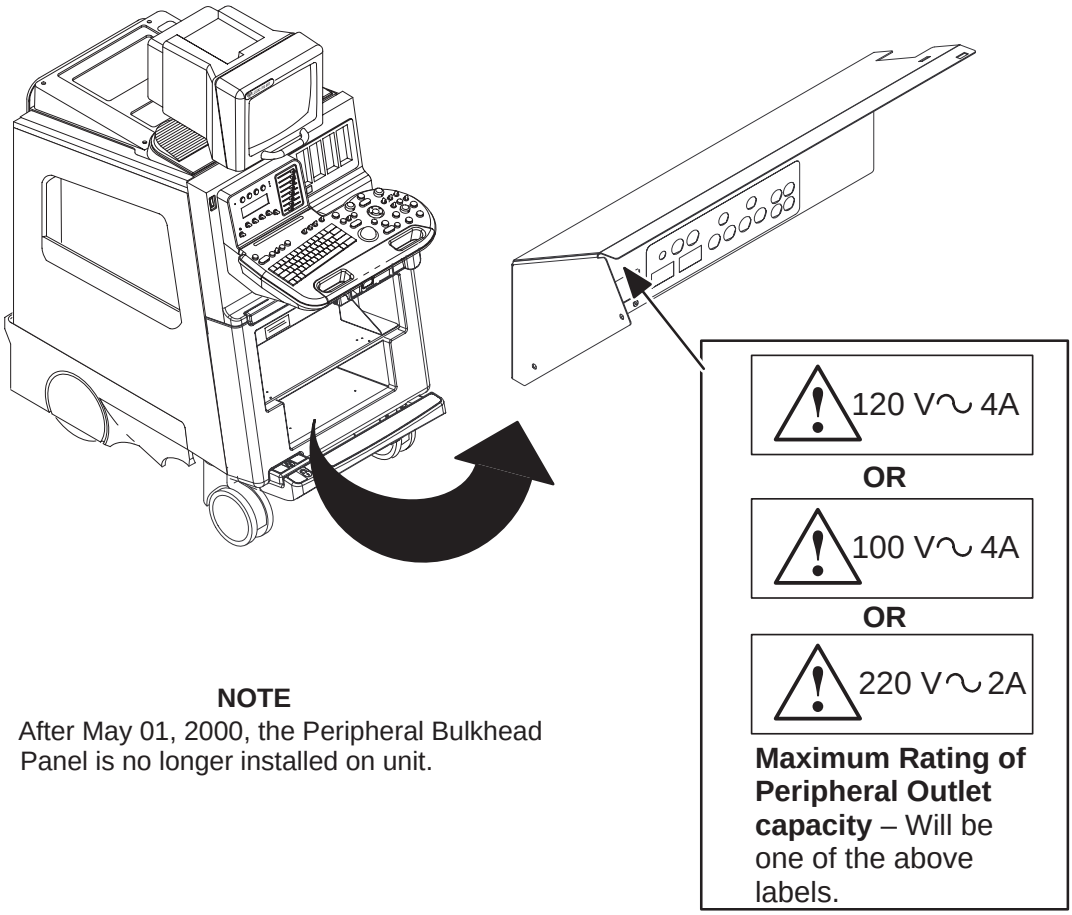

NOTE
After May 01, 2000, the Peripheral Bulkhead Panel is no longer installed on unit.

LABEL FOUND ON PERIPHERAL BULKHEAD PANEL
ILLUSTRATION 1–2

1–3–4 Label Locations (Continued)

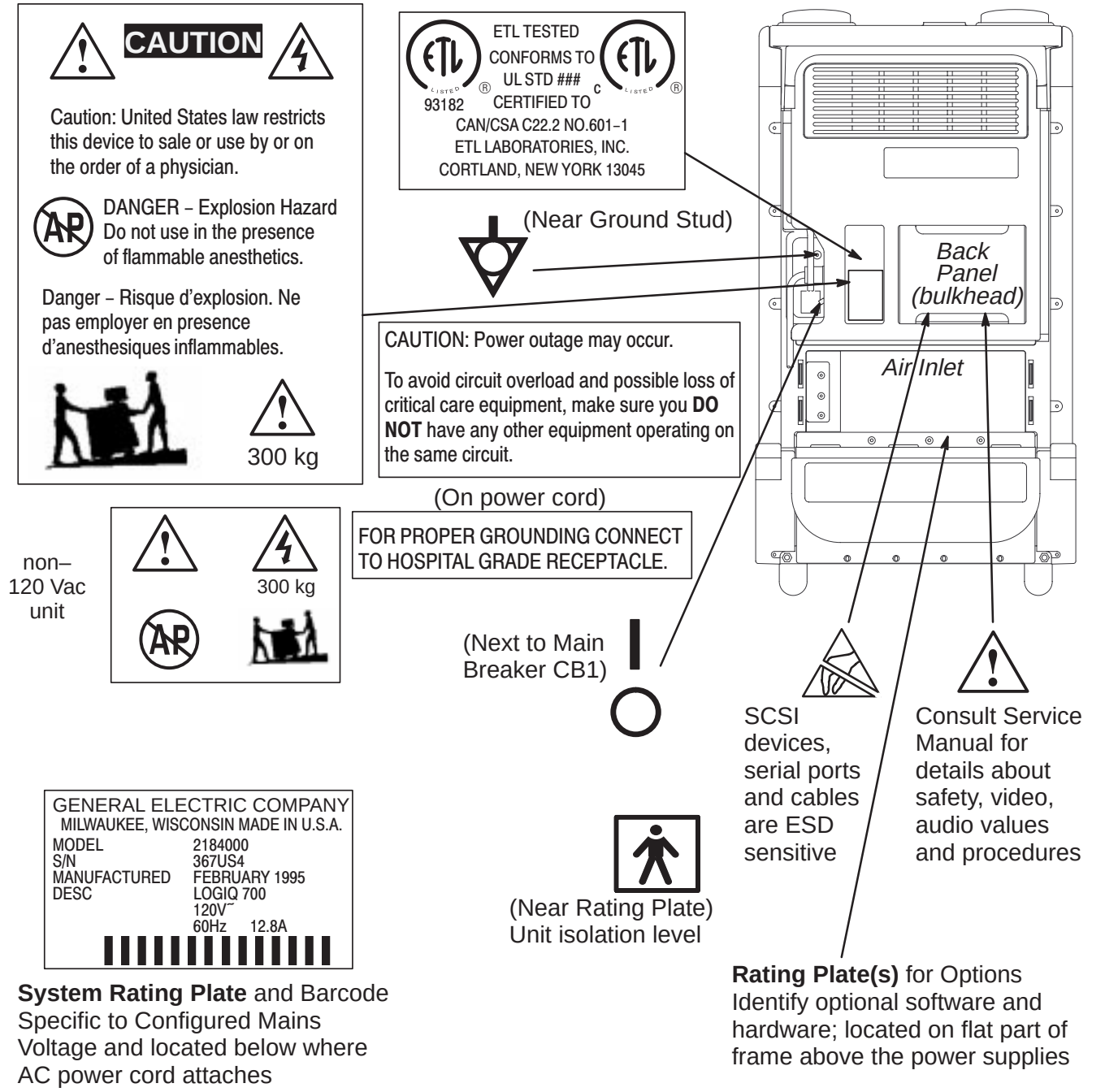

LABELS FOUND ON BACK OF LOGIQ™ 700
ILLUSTRATION 1–3

1–3–4 Label Locations (Continued)

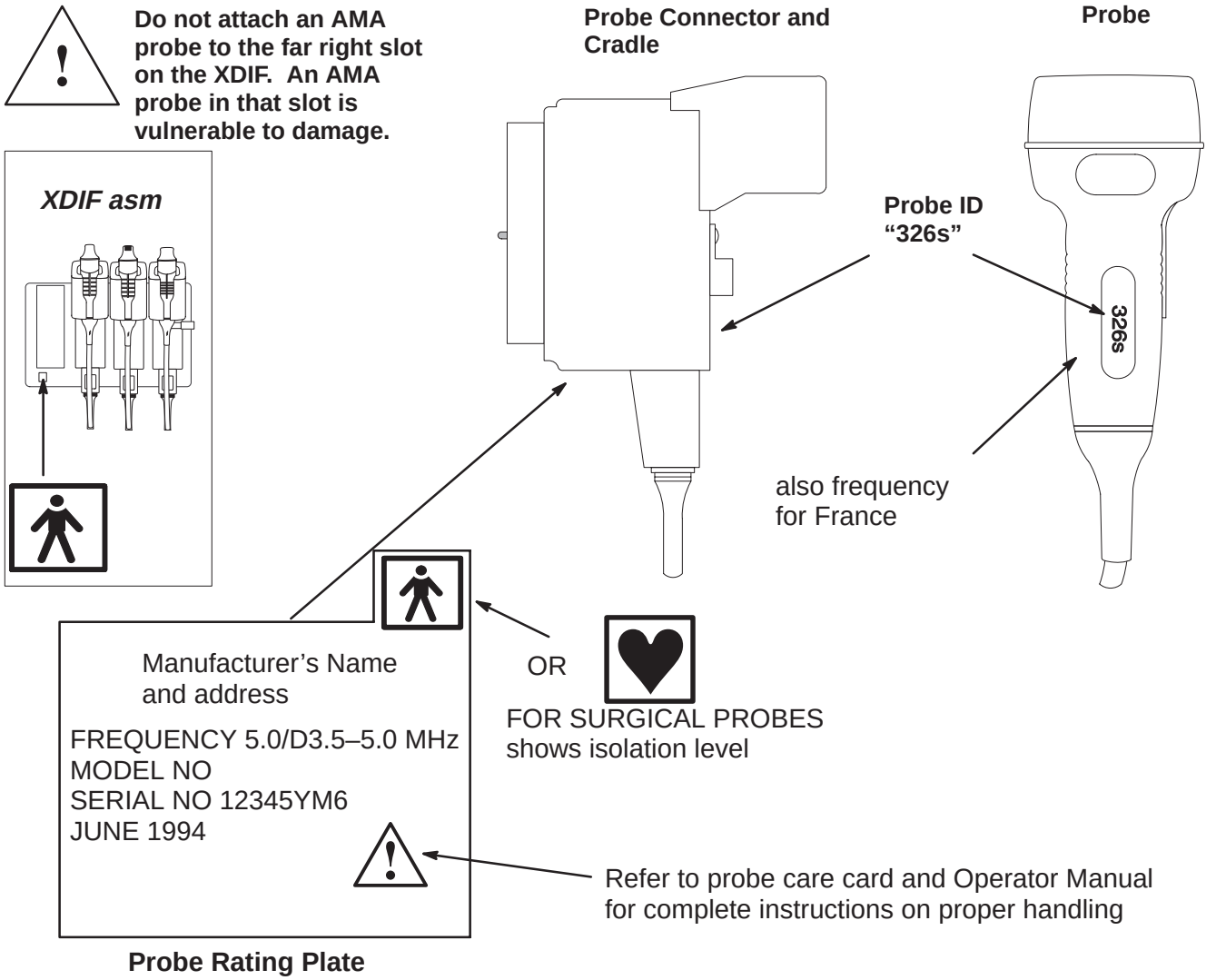

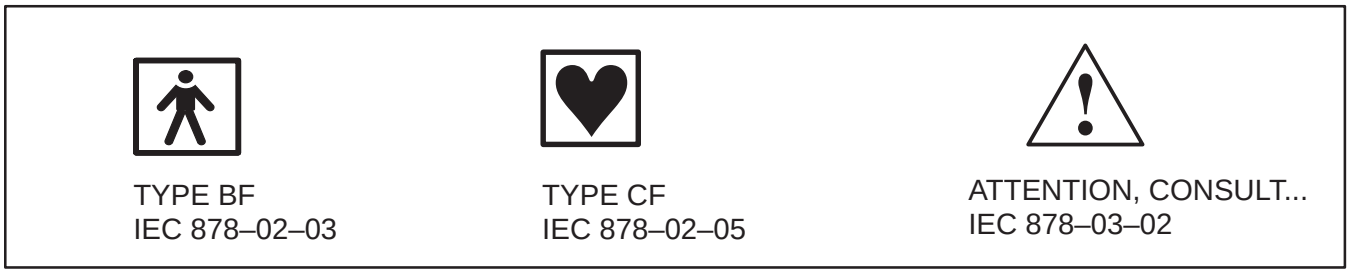

LABELS FOUND ON PROBES
ILLUSTRATION 1–4

1–3–5 Lockout/Tagout Procedures

Electrical. The service person is responsible for the control of electrical energy to the unit. When installation, repair or maintenance is needed, when contact with internal parts is possible, and when ESD protection is not required, the service person controls the energy to the unit by unplugging the AC power cord from the outlet and keeping exclusive control of that cord while installing, servicing or maintaining the unit. Service people who are trained in electrical safety and the particular hazards that this unit presents are qualified to replace ESD sensitive parts which entails keeping the unit plugged to ensure a good ground for the ESD wrist strap.

Step	Procedure
1	**Determine possible risk of contact with dangerous energy.**
2	**If any risk exists, unplug AC power cord from outlet.**
3	**Do not allow anyone to connect the cord until you are done.**

CAUTION:
Stored Mechanical Energy

To prevent injury or damage to electronics, the linear bearing must be supported when gas spring is removed.

Mechanical. When removal of the gas spring is needed, take care to not allow the linear bearing to fall down on you. You should raise the linear bearing to its highest elevation to facilitate gas spring removal, but be sure to block the fall of the linear bearing with a piece of wood or similar device that will occur once the gas spring is removed.

1–4 EMC, EMI, AND ESD

1–4–1 Electromagnetic Compatibility (EMC)

Electromagnetic compatibility describes a level of performance of a device within its electromagnetic environment. This environment consists of the device itself and its surroundings including other equipment, power sources and persons with which the device must interface. Inadequate compatibility results when a susceptible device fails to perform as intended due to interference from its environment or when the device produces unacceptable levels of emission to its environment. This interference is often referred to as radio–frequency or electromagnetic interference (RFI/EMI) and can be radiated through space or conducted over interconnecting power of signal cables. In addition to electromagnetic energy, EMC also includes possible effects from electrical fields, magnetic fields, electrostatic discharge and disturbances in the electrical power supply.

This product conforms with the requirements under Title 47 of the U.S. Code of Federal Regulations (47 CFR) administered by the Federal Communications Commission (FCC), Part 18 Industrial, Scientific, and Medical Equipment applicable to non–consumer ultrasonic equipment that is used for medical diagnosis and monitoring.

This product further conforms with the requirements of IEC 60601–1–2, Medical electrical equipment, Part 2 Collateral Standard: Electromagnetic compatibility – Requirements and tests. In accordance with the International Special Committee on Radio Interference (CISPR) Standard No. 11, the Class of operation and Group designation of this ISM equipment is stated on the EMC label which is affixed to the product near the product identification and rating label.

CE 0459

CISPR 11 / EN 55011
CLASS: A GROUP: 1
CLASSE: A GROUPE: 1

CAUTION – Diagnostic ultrasound belongs to a category of equipment referred to as industrial, scientific and medical (ISM) equipment. ISM equipment intentionally generates RF energy and therefore may cause more electromagnetic interference (EMI) than other electronic products. Ultrasound diagnostic equipment also incorporates sensitive RF circuitry that may detect unwanted radio communications (e.g., radio/TV broadcast and personal communications devices). Interference may cause distortion, degradation, or artifacts in the ultrasound image which could potentially obscure diagnostic information. The following guidance is provided to avoid or minimize possible interference and help maintain operation within specifications:

- Only use power and signal wiring provided or specified by GE Medical Systems. Never use an adaptor to connect a power source plug. Do not change cable length or material. Use of cables not properly shielded and grounded may result in the equipment causing or responding to radio frequency interference in violation of the European Union Medical Device Directive (CE mark) and FCC regulations.
- Use the peripherals specified by GE Medical Systems. DO NOT allow the monitor or peripheral cables to lie across the top of the card cage.
- Locate the unit as far as possible from other electronic equipment.
- Install the unit, peripherals, and replacement parts only as detailed in the Preinstallation Checks, Installation Chapter, Assembly Chapter, Renewal Parts Chapter, and the Peripheral Install manual. Use CE certified parts.
- Reinstall all hardware before returning the unit to clinical use.
- If unit is connected to a network, use only CE marked components for hubs, transceivers, peripherals, modems.
- If unshielded twisted pair (UTP) is used, wrap a ferrite ring or clamp to cable.

1–4–2 CE Compliance

The LOGIQ™ 700 unit conforms to all applicable conducted and radiated emission limits and to immunity from electrostatic discharge, radiated and conducted RF fields, magnetic fields and power line transient requirements. Applicable standards are: 47CFR Part 18, IEC 601–1–2, and 806–13.

ATTENTION **For CE Compliance, it is critical that all covers, screws, shielding, gaskets, mesh, clamps, are in good condition, installed tightly without skew or stress. Proper installation following all comments noted in this service manual is required in order to achieve full EMC performance.**

1–4–3 Electrostatic Discharge (ESD) Prevention

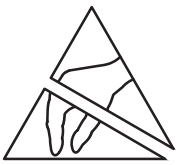

The circuit boards and disk drives for this system contain densely populated electronic components which are expensive and electrically sensitive. An electrostatic discharge (ESD) between 100 to 1000 V may damage a component. This is substantially less than the 3000 V discharge needed to feel any static. The ESD may cause an immediate failure, or it may weaken components to produce future, intermittent problems.

Proper Handling. Always use the ESD strap. Put the board or drive inside an anti–static bag or approved container before it is handled by a non–grounded person, moved from the grounded (ESD safe) area, or stored. Always place the board or drive top side up on a flat surface when it is unmounted. Never handle the part outside its anti–static container unless the surrounding surfaces and you are grounded. Discharge the outside of the container before transferring the part.

TABLE 1–3
RULES FOR PREVENTING OR REDUCING ESD DAMAGE

ESD rule	Details
Turn power OFF	Turn power OFF before you touch, insert or remove parts having electronic components.
Use wrist strap	Unless you are working near a live 30 V or more circuit, ground your wrist to the specially designed ground plug on the unit before you touch any parts. **This includes connecting cables to a drive, board, device, or bulkhead.** **Test your strap while wearing it with a specially designed meter.** If it fails, it may be due to dry skin; apply lotion to your wrist and test again. Throw away any strap that is more than three months old.
Don't let anything but your grounded hand touch the electronic FRU	Do not let your sleeve, tie, pen, Styrofoam cup, plastic manual binder or clothing touch the circuit board or disk drive. Wearing cotton clothes and shoes with rubber like soles may lessen how much ESD you generate walking across the room. Working in a room where relative humidity is under 20% can generate electrostatic voltages of 7000 to 35,000 Volts. However it only takes 100 V to damage a semiconductor device.
Use proper handling	Handle circuit boards, disk drives, or any electronic part as little as possible. Place them on an anti–static workbench pad or in a static dissipative bag that you have grounded. Do not stack them. LOGIQ™ 700 **boards should be stored in an anti–static container.** Pink, blue, or clear poly bags do NOT give protection from external sources of ESD. If you have an anti–static box, you can use the box as a static free work surface once you ground it.
Treat failed parts the same as good	You don't want to add to the expense, complication and future unreliability of a part by allowing it to be repeatedly zapped.
Use a special vacuum	When you use a vacuum, be sure it is the type that prevents electrostatic buildup.

1–5 CUSTOMER ASSISTANCE

TABLE 1–4
PHONE NUMBERS FOR CUSTOMER ASSISTANCE

Location	Phone Number	Comments
For GE Service		If this equipment does not work as indicated in the Operators Manual, contact your Support Center. Have the system ID number available when you call.
USA	(1) 800–437–1171	
CANADA	(1) 800–664–0732	
LATIN & SOUTH AMERICA	(1) 305–735–2304	
JAPAN	(81) 426–56–0033	
EUROPE	(33) (1) 30.70.40.40	
Ultrasound Applications		The phone number is for non–emergency purposes only since you may not receive an immediate response.
USA	(1) 800–682–5327	
Diagnostic Imaging Accessories (DIA)		If you need information about an accessory, contact DIA.
USA	(1) 800–472–3666	
Direct Customer Order Service (DCOS)		If the customer has a need for parts ID or parts ordering, contact DCOS.
USA	(1) 800–558–2040	

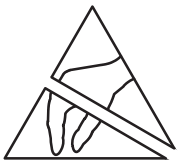

If you remove any circuit boards, practice good ESD prevention. Also check pins, connectors and backplane connectors for dust or dirt. These items can cause system failures.

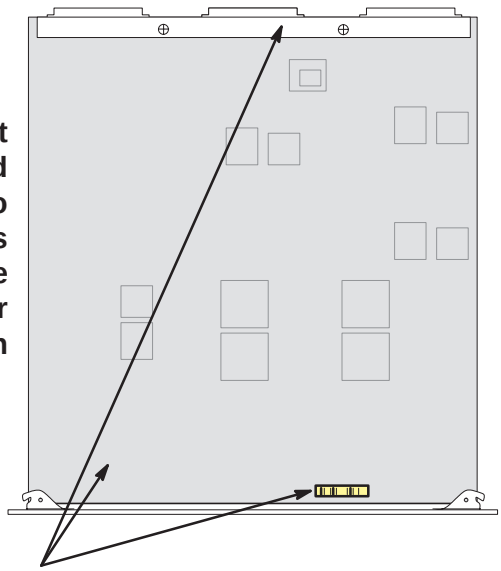

Possible Bar Code Locations

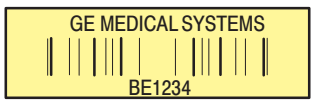

Board Part Numbers will be in one of the following formats:

46–XXXXXXGYY–ZZ
or
XXXXXXX–YY–ZZ

Where:

XXXXXX or **XXXXXXX** is the assembly part number

YY is the variation of the assembly–defines BOM

ZZ is the assembly revision–defines sub functionality

The Part Number is silkscreened on the board usually near the bar code which holds the part's Serial Number. You may need to refer to these labels to complete site paperwork or answer questions from Support Center.

PWA's will also have the bare PWB part number printed on them. It will be one number higher than the assembly.

LOCATING PART NUMBERS ON CIRCUIT CARD
ILLUSTRATION 1–5

SECTION 2 – PREINSTALLATION

TABLE OF CONTENTS

SECTION	TITLE	PAGE
2–1	PURPOSE OF SECTION	2–2
2–2	GENERAL INFORMATION	2–2
2–2–1	Time and Manpower Requirements	2–2
2–2–2	Important LOGIQ™ 700 Characteristics	2–2
2–2–3	EMI Limitations	2–4
2–2–4	Purchaser Responsibilities	2–5
2–3	FACILITY NEEDS	2–6
2–3–1	Required Features	2–6
2–3–2	Desirable Features	2–6
2–3–3	Environmental Limits	2–8
2–3–4	Cooling	2–8
2–3–5	Lighting	2–8
2–4	ELECTRICAL NEEDS	2–9
2–4–1	LOGIQ™ 700 Power Configurations	2–9
2–4–2	Inrush Current	2–9
2–4–3	Site Circuit Breaker	2–9
2–4–4	Site Power Outlets	2–9
2–4–5	Unit Power Plug	2–9
2–4–6	Power Stability Requirements	2–9
2–5	DICOM OPTION PRE–INSTALLATION REQUIREMENTS	2–10
2–5–1	Information Required from Customer’s Network Administrator	2–10
2–5–2	Information Required from LOGIQ™ 700 User	2–12
	Sales/Service Preinstallation Checklist	2–13

2–1 PURPOSE OF SECTION

This section provides the information required to plan and prepare for the installation of a LOGIQ™ 700. Included are descriptions of the facility and electrical needs to met by the purchaser of the unit. A checklist is also provided at the end of this section to help determine whether the proper planning and preparation is accomplished before the actual equipment installation is scheduled.

2–2 GENERAL INFORMATION

2–2–1 Time and Manpower Requirements

Site preparation takes time. Begin Preinstallation checks at least six weeks prior to the desired delivery date to allow enough time to make any changes.

Have two people available to deliver and unpack the LOGIQ™ 700. Attempts to move the unit considerable distances or on an incline by one person could result in injury or damage or both.

2–2–2 Important LOGIQ™ 700 Characteristics

Physical Dimensions. The physical dimensions of the LOGIQ™ 700 unit are summarized in Table 2–1 and Illustration 2–1.

TABLE 2–1
PHYSICAL DIMENSIONS OF LOGIQ™ 700

Dimension	Console Size	Shipping Size
Height	1510 mm (60 in)	1730 mm (68 in)
Width	656 mm (26 in)	870 mm (34 in)
Depth	1207 mm (48 in)	1420 mm (56 in)
Weight	238 kg (525 lb)	318 kg (700 lb)

2–2–2 Important LOGIQ™ 700 Characteristics (Continued)

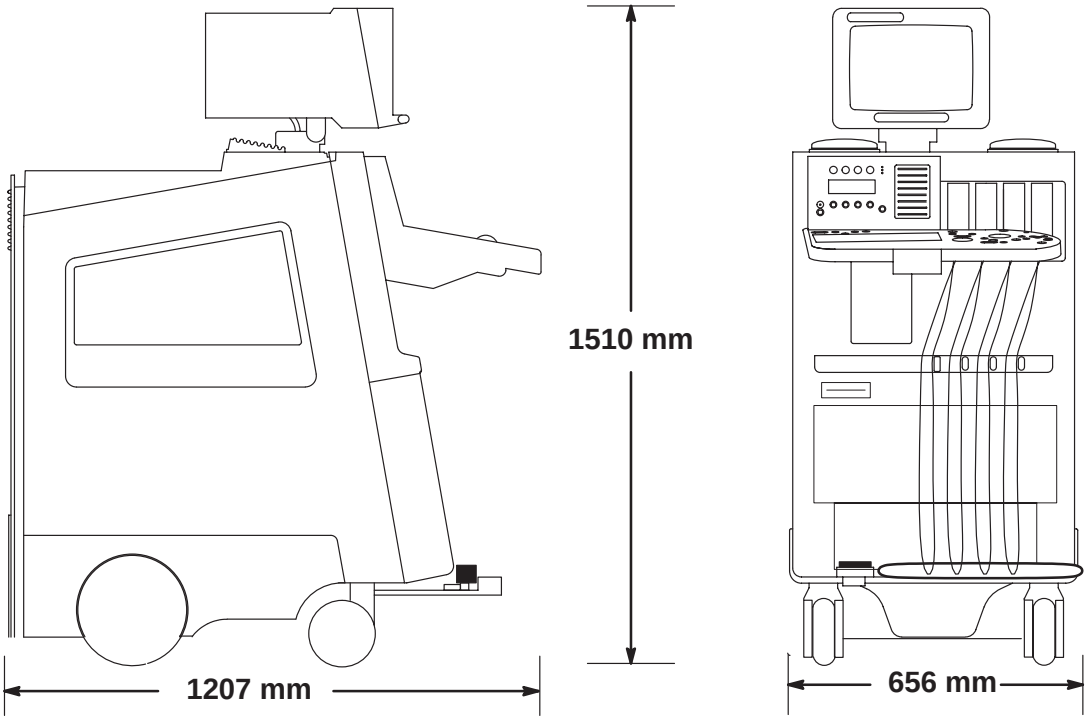

ENVELOPE DIMENSIONS FOR LOGIQ™ 700
ILLUSTRATION 2–1

Floor Load. Given the unit's weight, distance between its wheels, and estimating the on board peripheral weight, the floor load is approximately 1500 kg/m^2 (300 lbs/ft^2).

Acoustic Noise Output. The acoustic noise output is **60 dB max** when measured at 0.45 m (1.5 ft) from the operator panel at a height of 1.52 m (5 feet).

2–2–3 EMI Limitations

Ultrasound machines are susceptible to electromagnetic interference from radio frequencies, magnetic fields, and transients in the air or wiring that also generate EMI. The LOGIQ™ 700 complies with limits for the ISM Class and Group as stated on the EMC label. However there is no guarantee that interference will not occur in a particular installation.

Possible EMI sources should be identified before the unit is installed. Electrical and electronic equipment may produce EMI unintentionally as the result of a defect. These sources include medical lasers, scanners, cauterizing guns, computers, monitors, fans, gel warmers, microwave ovens, light dimmers and portable phones. The presence of a broadcast station or broadcast van may also cause interference.

TABLE 2–2
EMI PREVENTION/ABATEMENT

EMI rule	Details
Be aware of RF sources	Keep the unit at least 5 meters or 15 feet away from other EMI sources. Special shielding may be required to eliminate interference problems caused by high frequency, high powered radio or video broadcast signals.
Ground the unit	Poor grounding is the most likely reason a unit will have noisy images. Check grounding of the power cord and power outlet.
Replace all screws, RF gaskets, covers, cores	After you finish repairing or updating the system, replace all covers and tighten all screws. Any cable with an external connection requires a magnet wrap at each end. Install the shield over the front of card cage. Loose or missing covers or RF gaskets allow radio frequencies to interfere with the ultrasound signals.
Replace broken RF gaskets	If more than 20% or a pair of the fingers on an RF gasket are broken, replace the gasket. Do not turn on the unit until any loose metallic part is removed.
Do not place labels where RF gaskets touch metal	Never place a label where RF gaskets meet the unit. Otherwise, the gap created will permit RF leakage. Or, if a label has been found in such a position, move the label.
Use GE specified harnesses and peripherals	The interconnect cables are grounded and require ferrite beads and other shielding. Also, cable length, material, and routing are all important; do not change from what is specified.
Take care with cellular phones	Cellular phones may transmit a 5 V/m signal; a signal greater than 3 V/m could cause image artifacts. Use a regular phone within 5 m (16 ft) of the unit.
No power line filters	Filters placed between the power main and unit may cause problems; do not use one unless authorized by GE Engineering.
Properly dress peripheral cables	Do not allow cables to lie across the top of the card cage or hang out of the peripheral bays. Loop the excess length for peripheral cables inside the peripheral bays. Attach the monitor cables to the frame.

2–2–4 Purchaser Responsibilities

The work and materials needed to prepare the site is the responsibility of the purchaser. Delay, confusion, and waste of manpower can be avoided by completing preinstallation work before delivery. Use the Preinstallation checklist to verify that all needed steps have been taken. Purchaser responsibility includes:

- Procuring the materials required.
- Completing the preparations before delivery of the ultrasound system.
- Paying the costs for any alterations and modifications not specifically provided in the sales contract.
- Paying the phone line installation and monthly phone line charges.

Note

All electrical installations that are preliminary to the positioning of the equipment at the site prepared for the equipment must be performed by licensed electrical contractors. Other connections between pieces of electrical equipment, calibrations, and testing must also be performed by qualified personnel. The products involved (and the accompanying electrical installations) are highly sophisticated and special engineering competence is required. All electrical work on these products must comply with the requirements of applicable electrical codes. The purchaser of GE equipment must only utilize qualified personnel to perform electrical servicing on the equipment.

The desire to use a non–listed or customer provided product or to place an approved product further from the system than the interface kit allows presents challenges to the installation team. To avoid delays during installation, such variances should be made known to the individuals or group performing the installation at the earliest possible date (preferably prior to the purchase).

For reference purposes, the list of approved peripherals at the publishing date of the last revision of this manual is:

- Sony Video Camera Recorder (VCR), SVO9500MD2
- Sony Color Printer, UP2900/2950MD
- Sony Color Printer, UP1800/UPI1850MD
- Sony Color Printer, UP5600MD
- IIE Multi–image Camera, MP460II
- Sony Monochrome Printer, UP890MD

The ultrasound suite must be clean prior to delivery of the machine. Carpet is not recommended because it collects dust and creates static. Potential sources of EMI (electromagnetic interference) should also be investigated before delivery. Dirt, static, and EMI can negatively impact system reliability.

2–3 FACILITY NEEDS

A recommended floor plan that uses a 4.3 by 5.2 meter (14 by 17 foot) area is shown in Illustration 2–2. Another floor plan that uses a minimal 2.5 by 3 meter (8 by 10 foot) area is shown in Illustration 2–3.

2–3–1 Required Features

- **Dedicated single branch power outlet** of adequate amperage (see Electrical Requirements on page 2–9) meeting all local and national codes is less than 2.5 m (8 ft) from the unit's proposed location
- Door opening is at least 76 cm (30 in) wide
- Proposed location for unit is at least 0.3 m (1 ft) from the wall for cooling
- Power outlet and place for any external peripheral are within 2 m (6.5 ft) of each other with peripheral within 1 m of the unit to connect cables.

  The LOGIQ™ 700 *has four outlets inside the unit. One is for the monitor and three for on board peripherals.*

- Power outlets for other medical equipment and gel warmer
- Power outlets for test equipment and modem within 1 m (3.2 ft) of unit
- Clean and protected space to store transducers (in their cases or on a rack)
- Material to safely clean probes (done with a plastic container, never metal)
- For InSite to be installed, the site needs either a dedicated, analog phone line with a modular jack for the modem or a GE InSite Multiplexer setup.

2–3–2 Desirable Features

- Door is at least 92 cm (3 ft) wide
- Circuit breaker for dedicated power outlet is easily accessible
- Sink with hot and cold water
- Receptacle for bio–hazardous waste, like used probe sheaths
- Emergency oxygen supply
- Film viewer
- Storage for linens, film, and equipment
- Nearby waiting room, lavatory, and dressing room
- Dual level lighting (bright and dim)
- Lockable cabinet ordered by GE for its software and proprietary manuals

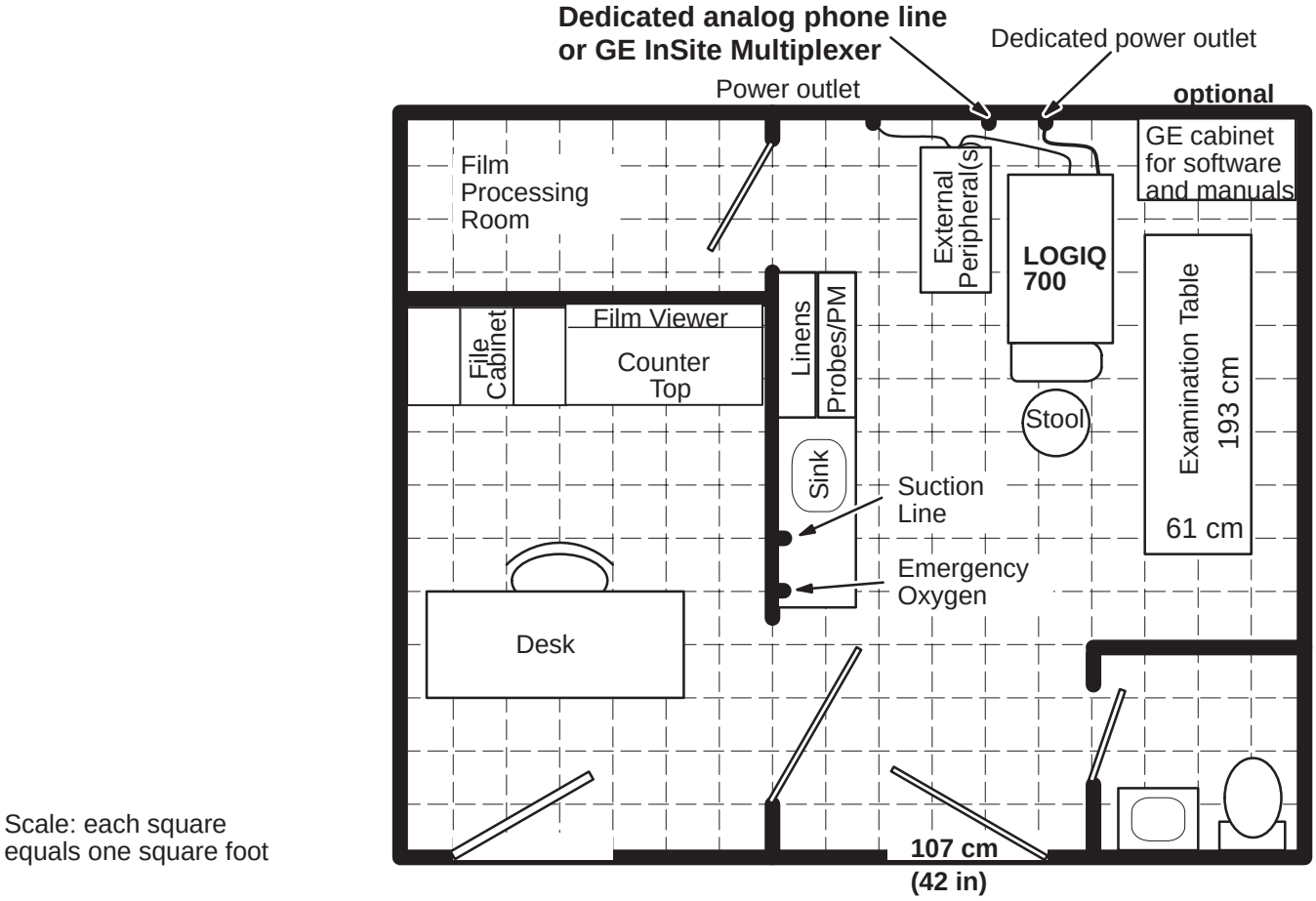

RECOMMENDED (14 BY 17 FEET) FLOOR PLAN
ILLUSTRATION 2–2

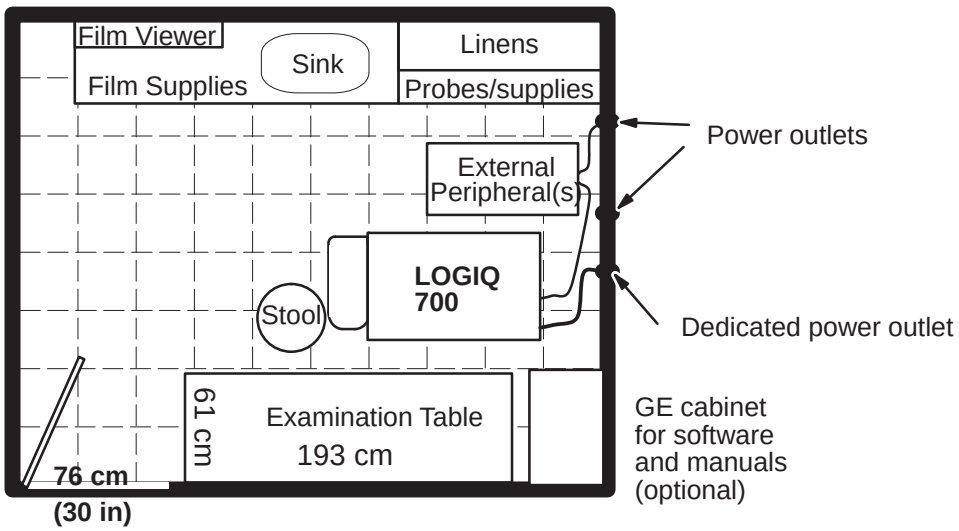

MINIMAL(8 BY 10 FEET) FLOOR PLAN
ILLUSTRATION 2–3

2–3–3 Environmental Limits

In order for the LOGIQ™ 700 to operate well, the unit's operating environment must be controlled. Care must also be taken when a unit is transported or stored. Avoid humidifiers because their moisture damages electronic parts. The environmental limits for operation, storage, and transport are listed in Table 2–3.

TABLE 2–3
LOGIQ™ 700 ENVIRONMENTAL LIMITS

	Temperature	Humidity	Maximum Altitude
Patient Comfort	20 to 26°C (68 to 79°F)	50 to 70% noncondensing	
Operational	15 to 30°C (59 to 86°F)	5 to 85% noncondensing	3050 m (10,000 ft)
Storage	0 to 55 °C (30 to 130°F)	5 to 85% noncondensing	3050 m (10,000 ft)
Transport (for less than 16 hrs)	–20 to 55°C (–4 to 130°F)	5 to 85% noncondensing	10,600 m (35,000 ft)

After being transported, the unit may be very cold or hot. If a very cold machine is operated, condensation will form on the electronic components which could damage the hard drive, VCR, or circuit boards. If a very hot machine is turned on, the host will shut down operation, or the power supplies will stop working. Electronic components could fail; plastic parts could deform.

If a unit arrives too hot or cold (outside the Operational Temperature Range, allow the unit to acclimate before applying power. A one hour wait is recommended for each 2.5°C increment the unit's temperature is below 15°C or above 30°C. However, a wait of one hour per 15°C increment the temperature is outside the unit's operating range may be okay. A summary of these waiting times is provided in Table 2–4.

TABLE 2–4
WAITING TIME PRIOR TO OPERATING A UNIT THAT ARRIVES TOO HOT OR COLD

°C	–40	–35	–30	–25	–20	–15	–10	–5	0	5	10	15	20	25	30	35	40	45	50	55
°F	–40	–31	–22	–13	–4	5	14	23	32	41	50	59	68	77	86	95	104	113	122	131
Best hrs	22	20	18	16	14	12	10	8	6	4	2	0	0	0	0	2	4	6	8	10
OK hrs	3.6	3.3	3	2.6	2.3	2	1.6	1.3	1	.6	.3	0	0	0	0	.3	.6	1	1.3	1.6

2–3–4 Cooling

The cooling requirement for the LOGIQ™ 700 is 6500 BTU/hr. This figure does not include cooling needed for lights, people, or other equipment in the room. Each person in the room places an additional 300 BTU/hr demand on the cooling system.

2–3–5 Lighting

Bright light is needed for system installation, updates and repairs. However, operator and patient comfort may be optimized if the room light is subdued and indirect. Therefore a combination lighting system (dim/bright) is recommended. Keep in mind that lighting controls and dimmers can be a source of EMI which could degrade image quality. These controls should be selected to minimize possible interference.

2–4 ELECTRICAL NEEDS

2–4–1 LOGIQ™ 700 Power Configurations

The LOGIQ™ 700 can be configured to any of the nominal power ratings listed in Table 2–5.

TABLE 2–5
LOGIQ™ 700 POWER RATING CONFIGURATIONS

system power	peripheral power*	model	rating
120 V 20 Amp line	500 VA allocated for 120 V peripherals	2184000, or –6, or –11	120V 12.8A
220 V 10 Amp line	500 VA allocated for 120 V peripherals	2184000–2, or –7, or –12	220V 10A
240 V 10 Amp line	500 VA allocated for 240 V peripherals	2184000–3, or –8, or –13	240V 10A
100 V 15 Amp line	500 VA allocated for 100 V peripherals	2184000–4, or –9, or –14	100V 14A

* Includes power used by monitor

2–4–2 Inrush Current

Inrush current will be less than 70 A.

2–4–3 Site Circuit Breaker

CAUTION

POWER OUTAGE MAY OCCUR
The LOGIQ™ 700 requires a dedicated single branch circuit. To avoid circuit overload and possible loss of critical care equipment, make sure you DO NOT have any other equipment operating on the same circuit.

It is recommended that the branch circuit breaker for the machine be readily accessible.

2–4–4 Site Power Outlets

A dedicated AC power outlet must be within reach of the unit without extension cords. Other outlets adequate for the external peripherals, medical and test equipment needed to support this unit must also be present within 1 m (3.2 ft) of the unit. Electrical installation must meet all current local, state, and national electrical codes.

2–4–5 Unit Power Plug

If the unit arrives without a power plug, or the wrong plug, the installation engineer must supply what is locally required.

2–4–6 Power Stability Requirements

Monitor the site's line voltage for a week before installation. The voltage should be stable, remaining within 10 % of the unit's rated value. In addition, line frequency should fall between 47 and 63 Hertz.

Power transients must be less than 25% over nominal peak voltage for less than 1 ms for any type of transient. This includes line frequency, synchronous, asynchronous, or aperiodic transients.

Note

If the site's power line voltage does not meet the requirements outlined, it is suggested that a ferro resonant Uninterruptable Power Supply (UPS) be provided. A tap switching line conditioner is not recommended because the switching transients can exceed the limits specified for the LOGIQ™ 700.

2–5 DICOM OPTION PRE–INSTALLATION REQUIREMENTS

2–5–1 Information Required from Customer's Network Administrator

To configure the LOGIQ™ 700 to work with other network connections, the site's network administrator must provide information as follows (refer to Illustration 2–4):

- A host name, port number, AE Title, IP address and Net Mask for the LOGIQ™ 700.
- The IP addresses for the default gateway and other routers at the site.
- The host name, IP address, port and AE Title for each device the site wants connected to the LOGIQ™ 700.
- Up to 11 DICOM devices can be listed (ten printers or storage devices and one worklist device).

LOGIQ 700
Host Name _____ Local Port _____ IP Address ___ . ___ . ___ . ___
AE Title _____ Net Mask ___ . ___ . ___ . ___

ROUTING INFORMATION
Destination IP Addresses

ROUTER1				
ROUTER2				
ROUTER3				

GATEWAY IP Addresses

Default				

DICOM APPLICATION INFORMATION

	DEVICE TYPE	NAME	AE TITLE	IP ADDR	PORT
1					
2					
3					
4					
5					
6					
7					
8					
9					
10					
11					

PHYSICAL LOCATION

1	
2	
3	
4	
5	
6	
7	
8	
9	
10	
11	

WORKSHEET FOR DICOM NETWORK INFORMATION
ILLUSTRATION 2–4

2–5–2 Information Required from LOGIQ™ 700 User

With the DICOM Option, both the locally connected peripherals and remotely connected DICOM devices can be used by the operator. With system software, four keystroke combinations can be assigned to print or copy images. Each one of these keystroke combinations can cause more than one action to occur at the same time. And, the multiple actions can include both local and remote events.

The customer must specify the actions that each of four keystroke combinations will initiate. Make a note of these actions and the associated device's name and IP address or other details that may be helpful.

GRAY or COLOR IMAGE FILE – Choose only one per key		P1	P2	Shift+P 1	Shift+P 2
This key will send GRAY image file					
This key will send COLOR image file					

LOCAL STORAGE DEVICE – Choose only one per key		P1	P2	Shift+P 1	Shift+P 2
Save image on Hard Drive					
Copy image to MOD					

LOCAL PRINT DEVICE (examples of local print devices are: SNY UP2900, UP5600, Print, Expose 1, etc..)– Choose only one per key		P1	P2	Shift+P 1	Shift+P 2
1.					
2.					
3.					
4.					

DICOM DEVICE TYPE (PRINTERS, STORAGE, or WORKLIST) – More than one can be assigned per key	Device Name	P1	P2	Shift+P 1	Shift+P 2
1.					
2.					
3.					
4.					
5.					
6.					
7.					
8.					
9.					
10.					
11.					

WORKSHEET FOR USER NETWORK PREFERENCES
ILLUSTRATION 2–5

Sales/Service Preinstallation Checklist

Scheduled Arrival Date	Salesperson
Customer	FDO #
Equipment	Room #

YES	NO	n/a	Requirements Checklist
			Electrical
			To avoid circuit overload and possible loss of critical care equipment, no other equipment can be on the same circuit. A dedicated single branch outlet of adequate amperage that meets all local and national electrical codes MUST BE available within the range of the machine's power cord. That cord can be 3 or 4.5 m (10 or 15 feet) long.
			Line voltage is within 10% of rated value. No transients greater than 25% over nominal peak voltage nor longer than 1 ms in duration occur.
			At least one outlet on another branch is available for power tools, test equipment, or modem. That outlet must be within 1 m (3.2 ft) of the unit.
			Outlets are available for the desired number of external peripherals. Each outlet must be within 2 m (6.5 ft) of the related peripheral.
			If the site requires a leakage current checkout by a biomedical electronic technician, arrange an appointment with those involved and if possible with local service also.
			Leakage Current test equipment is available. The 120 Vac machine that has a 20 A plug may require a test adapter; the probe tests may require another.
			Environmental/Facilities
			Hardcopy of recommended layout and facilities is left with the customer.
			No known sources of RFI/EMI or issues seen such as PC's, alarm systems, medical scanners, broadcast stations, broadcast vans in the area.
			If sources of RFI/EMI are suspected, a site survey request has been made to the Regional Ultrasound EMI Specialist.
			If desired, a lockable storage cabinet for manuals/software has been ordered for the site by the local service office. LG: 46–194427P299 SM: 46–194427P253
			1) A Dial In Direct (DID) modular phone jack is within 1 m (3.2 ft) of the unit's back panel. Either an analog line without extensions or connections to a switchboard –or– 2) a GE InSite Multiplexer will be installed.
			The finished wall, floor (preferably not carpeted) and ceiling are installed. Door can be locked. Room and corridors are dirt and dust free.
			Room lighting is adequate. Both bright and dim lights are available.
			The air conditioning is operating and stable. The machine alone requires 6500 BTU/hr. Two people add about another 600 BTU/hr. Room temperature stays between 18 and 26°C (65 and 78°F).

Sales/Service Preinstallation Checklist, continued

YES	NO	n/a	Preinstallation Checklist
			Peripherals/Options
			A shelf, cart or table is available to support external peripherals and is within 1 m (3.2 ft) of the system's back panel. (See current Price List for compatible peripherals)
			Arrangements have been made with the vendor or dealers to install/ service any GE provided peripheral that GE does not service (i.e. Kodak Lasercam).
			If a laser camera is ordered, the correct installation kit(s) is also ordered. (See Price List for compatible interface kits. Cable lengths are also listed.)
			When the customer desires to interface the LOGIQ™ 700 to a non–listed or customer provided product, or to place an approved peripheral further from the unit than the interface kit allows, follow local service policy. In the Americas pole an SOI must be submitted and responded to by headquarters **PRIOR** to the sale. The SOI is paid either by the customer or it becomes a sales expense. The SOI form is available on Wizard mail.
			The vendor of the non–listed or customer provided peripheral has been informed of the desired hookup date.
			Obtain network configuration details from the site's system administrator. Get the desired control panel operation from the customer who also needs to provide the network cabling and a 500V isolation device on the ethernet port.
			Transportation/Delivery
			Two people are available to deliver and unpack.
			If the site has no loading dock, arrange for a van with a lift gate.
			Access to equipment room is not precluded by inadequate door widths, steep or narrow ramps, elevators too small to enter, etc. If so, an alternate path has been identified.
			Place to unpack is available. Since the pallet is 87 cm (34 in) wide, the shipping crate requires passages wider than 90 cm (36 in).
			If old equipment needs to be removed/packed, arrangements with the customer or GE have been made.

Comments

Inspection Dates	
Salesperson Signature	**Date**
U/S Accounts FE Approval	**Date**
Customer Apprised	**Date**

SECTION 3 – INSTALLATION

TABLE OF CONTENTS

SECTION	TITLE	PAGE
3–1	PURPOSE OF SECTION	3–2
3–2	GENERAL INFORMATION	3–2
3–2–1	Installation Checklist	3–2
3–2–2	Installation Certificate	3–3
3–2–3	Time Requirements	3–4
3–2–4	Tool Requirements	3–4
3–2–5	Safety Reminders	3–5
3–2–6	EMI Protection	3–6
3–3	RECEIVING AND UNPACKING THE EQUIPMENT	3–6
3–3–1	Check the Shipment	3–6
3–3–2	Handling Incomplete or Damaged Shipment	3–6
3–3–3	Unpack the Unit	3–7
3–4	INSPECTING THE FACILITY	3–8
3–4–1	Check the Facility Preparations	3–8
3–4–2	Test the AC Outlet Provided for the Unit	3–8
3–5	PREPARING THE UNIT FOR INSTALLATION	3–9
3–5–1	Check the Unit Configuration	3–9
3–5–2	Test the Unit Grounding	3–11
3–6	COMPLETING THE INSTALLATION	3–12
3–6–1	Anchor the Unit (If Required)	3–12
3–6–2	Unpack and Install the Probes and Options	3–12
3–6–3	Test the Unit Chassis for Leakage Current	3–13
3–6–4	Test the Probes for Leakage Current	3–15
3–6–5	Test the Peripherals for Leakage Current	3–18
3–6–6	Correcting Leakage Current Problems	3–20
3–7	TRANSPORTING THE UNIT	3–21

3–1 PURPOSE OF SECTION

This section contains information needed to install the unit. Included are procedures that describe how to receive and unpack the equipment, how to file a damage or loss claim, how to prepare the facility and unit of the actual installation, and how to check and test the unit, probes, and external peripherals for electrical safety. Also included in this section are guidelines for transporting the unit to a new site.

3–2 GENERAL INFORMATION

3–2–1 Installation Checklist

Use this checklist to record steps and time required to complete this installation. References to the Installation and Functional check sections of the Service Manual are included. The probe leakage current measurements will no longer be required to be completed. Also a reduced version of the functional checks should be used (Refer to Paragraph 4–1 in Section 4 of this Manual).

Time	Installation Step	Page
	Read and understand all warnings in the Safety Section.	1–1
	Receive and unpack the equipment: ● Check the shipment. ● Handle incomplete or damaged shipment. ● Unpack the unit. Note exception here if you had to unpack the unit.	3–6
	Inspect the facility (if preinstallation is not done, install Power Watch now).	3–8
	Prepare the unit for installation: ● Move the unit to its final location and check the unit configuration. ● Check the unit's grounding through its power cord. ● After ensuring unit is acclimated to environment, connect unit to tested power outlet.	
	Complete the installation: ● If required, anchor unit. ● Unpack and install probes. ● If ordered, install InSite modem. (Modems are being preprogrammed for L700; InSite phone connection is all that needs to be done.) Note exception if phone line is not available. ● Test unit and any external peripherals for leakage current. (factory installed peripherals or fiber optic connected laser cameras do not need to be leakage tested.) ● Modify service related items of General System Presets. ● Run functional checks. ● Ensure user manual, keyboard, overlay, control panel buttons, and OB calcs are in proper language. ● If applicable, install option rating plates or verify their presence for factory installed options. ● If applicable, complete and mail Product Locator Card(s) or contact SSA to have this FDO equipment installed into the correct room/SYSID location for this equipment. Use a printout of the PLOS Product Browse screen (Refer to Illustration 3–1)to leave with the Installation Certificate (Refer to paragraph 3–2–2). ● Complete and copy applicable paperwork to create an installation/maintenance file for the unit.	3–12 4–2
	Miscellaneous Time: ● Demo/Applications/Courtesy time (if needed) ● Laser Camera installation or connection (if needed)	

210997438	VA SUPPLY FISCAL DIV (901A)	0810032412	LOGIQ 700ULTRA
	A/C VA MED.CTR.JACKSON,MS	601362L7	0810–032412
	P.O. BOX 7005		
	HINES IL 60141–70		
OCP 0810 B–S 001 ORDER			

SERIAL NO	MODEL NUMBER	MODEL DESCRIPTION	SHIPPED
5857US8	2177070–11	LOGIQ 700 S/W R8.2	990714
5858US6	2184000	LOGIQ 700	990714
43310VP2	2139859	PROBE 348C	990714

PLOS SCREEN – EXAMPLE
ILLUSTRATION 3–1

3–2–2 Installation Certificate

Electrical Tests	Max Value Allowed	Actual Value	ok ✓	Comments
AC Outlet	polarity and retention force			
Console _____ Ground Continuity	0.15 Ω			
external peripheral _____ Ground Continuity	0.15 Ω			
external peripheral _____ Ground Continuity	0.15 Ω			

Functional Tests	Comments or Exceptions

Misc. Questions	Y/N	Comments
Was the equipment unpacked and in room?		
Was the order complete?		
Was the dedicated phone line available?		
How many 700's have you installed?		
Power watch installed/checked?		
Install complete Date:		
Dispatched time to CARES: 0003 Labor= 004 Travel=		
Any other comments?		

3–2–3 Time Requirements

The LOGIQ™ 700 can be installed and checked out by an Ultrasound Field Engineer in approximately **six hours**. Consoles with optional equipment that was not installed at the factory may take slightly longer. Installation instructions accompany each Option Kit.

3–2–4 Tool Requirements

Test equipment and tools needed to install a unit are listed in Table 3–1.

TABLE 3–1
TOOLS NEEDED FOR INSTALLATION

Tool	Part Number	Use
Digital Volt Meter (DVM)		
Open end 17 mm wrench	2117813–5	needed for M10 bolts
Anti Static Kit	46–194427P231	Kit includes anti–static mat, wrist strap and cables
	46–194427P279	for 200 to 240 V system
	46–194427P369	3M #2204 Large adjustable wrist strap
	46–194427P373	3M #2214 Small adjustable wrist strap
	46–194427P370	3M #3051 conductive ground cord
Safety Analyzer	46–285652G1	DALE 600 KIT for electrical tests
QIQ Phantom	E8370RB (RMI 403GS)	Grayscale Target (0.5 dB/cm/MHz)
	E8370RE (RMI 404GS)	Small Parts, Near Field (0.5dB/cm/MHz)

3–2–5 Safety Reminders

DANGER **When using any test instrument that is capable of opening the AC ground line (i.e., meter's ground switch is OPEN), don't touch the unit!**

CAUTION **Two people should unpack the unit because of its weight. Two people are required whenever a part weighing 22 kg (50 lb) or more must be lifted.**

CAUTION **If the unit is very cold or hot, do not turn on its power until it has had a chance to acclimate to its operating environment. The equipment could be damaged if powered on when it is colder than 15°C (59°F) or hotter than 30°C (86°F).**

CAUTION **To prevent electrical shock, connect the unit to a properly grounded power outlet. Do not use a three to two prong adapter. This defeats safety grounding.**

CAUTION **Do not wear the ESD wrist strap when you work on live circuits and more than 30 V peak is present.**

CAUTION **Do not use a 20 Amp to 15 Amp adapter on the 120 Vac unit's power cord. This unit requires a dedicated 20 A circuit and can have a 15A plug if the on board peripherals do not cause the unit to draw more than 14.0 amps.**

CAUTION **Do not operate this unit unless all board covers and frame panels are securely in place. System performance and cooling require this.**

CAUTION **Place the air filter with great care. Notice the arrow on the air filter. The arrow must point into the machine. If it points out, embedded dirt will be blown into the console. This could clog the power supply filters which could cause the supplies to overheat and shut down the system.**

Operator Manual The Operator Manual should be be fully read and understood before operating the LOGIQ™ 700 and kept near the unit for quick reference.

Acoustic Output Hazard Although the ultrasound energy transmitted from the LOGIQ™ 700 probe is within AIUM/NEMA standards, avoid unnecessary exposure. Ultrasound energy can produce heat and mechanical damage.

3–2–6 EMI Protection

This unit has been designed to minimize the effects of Electro Magnetic Interference (EMI). Many of the covers, shields, and screws are provided primarily to protect the system from image artifacts caused by this interference. For this reason, it is imperative that all covers and hardware are installed and secured before the unit is put into operation.

3–3 RECEIVING AND UNPACKING THE EQUIPMENT

3–3–1 Check the Shipment

Upon receipt, inspect each package without unpacking it. Check the shipment to be sure that all items are received. If any shortage or damage is noted, proceed as directed in section 3–3–2.

3–3–2 Handling Incomplete or Damaged Shipment

If the unit doesn't arrive when expected or the order is incomplete, call the Service Support Center for your location.

If a new system arrives at a USA location damaged, follow the procedure given below. Countries outside the USA require the shipment be insured. If this is the case, submit a claim to the appropriate insurance agency.

✓	Step	Procedure	
	1	Note any damage or shortage on the delivery receipt. Be as specific as possible.	
	2	If noticed on arrival:	Have the driver sign his/her name to damage notation.
		If noticed later:	Notify carrier immediately. **Request inspection within the 14 day limit imposed by carrier regulations.**
	3	Request inspection by carrier, which may be waived. Record name of person who refuses inspection.	
	4	Keep the damaged goods, including the packaging, intact and hold in a secured area until inspection is completed.	
	5	Call GE Traffic Dept. in Milwaukee for further instruction and a File number. The phone number is 414–827–3402. They will need: • Consignee name, address, order number • Carrier, delivery date, freight/air bill number • Catalog or part number • Your belief as to what happened and whether it's repairable	
	6	File a claim putting the File number on all documentation and send it with all supporting documentation: • Delivery receipt • Inspection report if done • Dispatch record if repaired (code 84) • Copy of RG paperwork if item was returned via that route to Traffic Dept. NB–906	

3–3–3 Unpack the Unit

Check the shipping container for special instructions. Verify that the container is intact. In some cases a secondary container may be used. If so, ask the carrier for their unpacking instructions. A deep socket or open end 17 mm wrench is required .

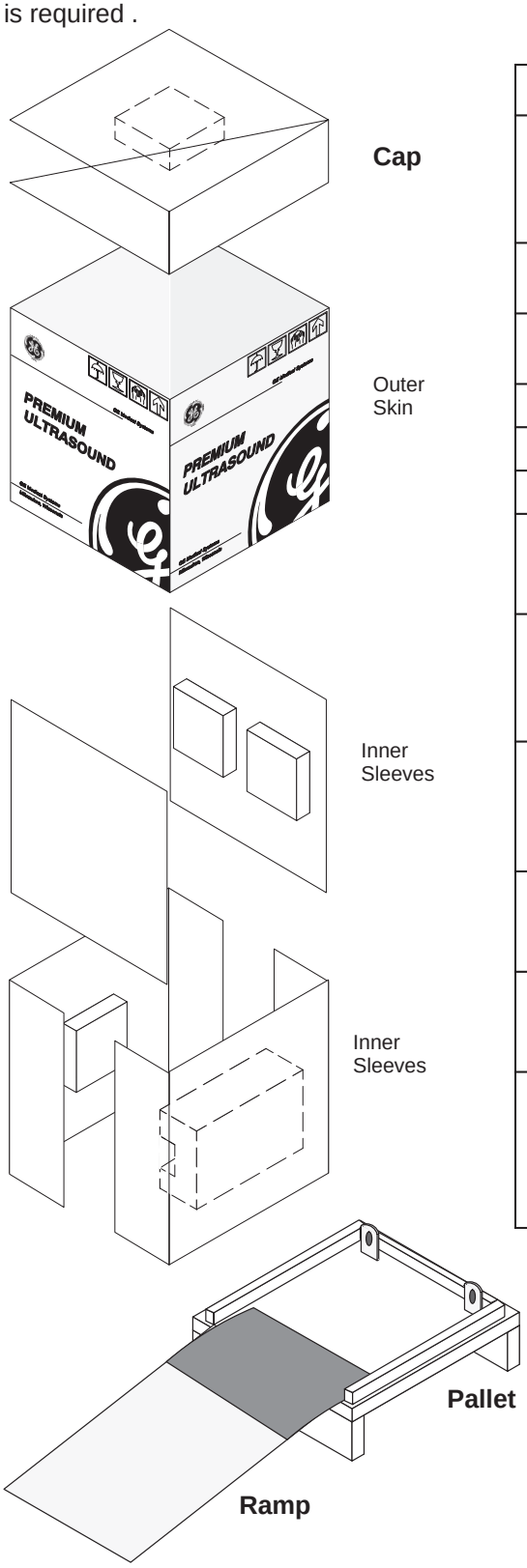

Ensure ramp is on the lip and flush before you roll the unit off the pallet

✓	Step	Procedure
	1	Position the pallet so there is enough room – at least 3 meters (10 feet) for the unit to be rolled down the ramp. Ramp, provided in package, is illustrated below.
	2	Leaving the package upright, cut the plastic bands.
	3	Lift the corrugated cap up and off; the cap includes a foam block that surrounds the monitor.
	4	Remove the graphic outer skin.
	5	Remove the cardboard inner sleeves.
	6	Remove the plastic bag from the unit.
	7	Release the two Velcro straps and unfold the ramp, taking care to avoid dropping the ramp on you.
	8	Unscrew the two M10 bolts (seismic anchors) that hold the back of the unit to the two brackets. If present, unscrew the four M10 bolts and remove the two wheel chocks.
	9	**CAUTION: This step requires at least two people.** Unlock the brakes by stepping down on the brake pad in front. Then carefully roll the LOGIQ™ 700 off the pallet and down the ramp.
	10	Probes, peripherals, and manuals are shipped in separate cartons. Locate these boxes and remove their contents.
	11	Verify the equipment received against the order. Follow procedure described on previous page if the order is incomplete or damaged.
	12	If you will be moving your unit to other sites, save and reuse the original packaging. Refasten the ramp with the two straps. Otherwise dispose of the packing material in an environmentally sound way.

3–4 INSPECTING THE FACILITY

3–4–1 Check the Facility Preparations

The facility that will house the LOGIQ™ 700 should be clean and orderly. All preinstallation tasks should be completed. (Refer to Preinstallation Checklist beginning on page 2–13).

3–4–2 Test the AC Outlet Provided for the Unit

Visual Check. Check for the words “Hospital Grade” or “Green Dot” on the outlet. The AC outlet, must also be tested using a meter that has an outlet tester or a neon outlet tester as described below.

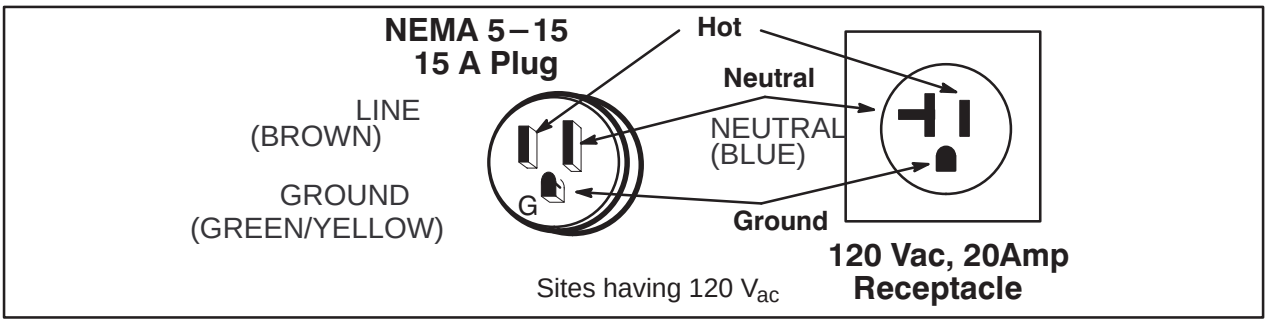

PIN CONFIGURATIONS FOR 120 VAC SITE OUTLET
ILLUSTRATION 3–2

WARNING

To meet all electrical code requirements, the unit has various AC configurations whose hardware and rating plate reflect that configuration. Under no circumstances should you alter, change, or adapt the prescribed plug from what is provided for your installation. Never use an adapter or extension on the cable or plug.

Neon Tester. This is the easiest way to test the AC outlet. Simply insert the tool into the receptacle. If it lights as shown in instructions that came with the tester, the outlet is OK to use. If it fails, have the site repair the outlet.

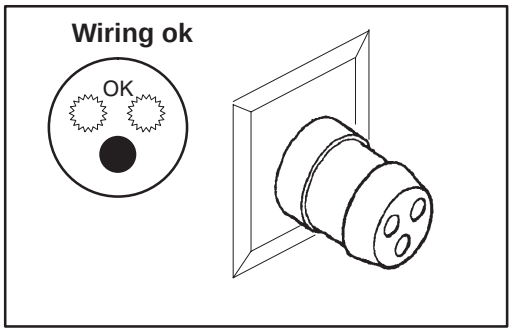

TYPICAL NEON OUTLET TESTER
ILLUSTRATION 3–3

3–5 PREPARING THE UNIT FOR INSTALLATION

✓	Step	Procedure
	1	Move the console to its destination.
	2	Check the unit configuration to ensure unit and on–board peripherals can operate from the available power. See Section 3–5–1.
	3	Verify the unit power cord is firmly attached to the unit.
	4	Test the unit grounding through the power cord. See Section 3–5–2.
	5	Verify that the unit has had enough time to acclimate to the site temperature. (See page 2–8.)
	6	Once you're confident that the unit matches available power, plug the unit's power cable into the outlet tested in Section 3–4–2.

3–5–1 Check the Unit Configuration

Check the Model Number. The model number, given on the system rating plate (Illustration 3–4), defines the unit configuration. Compare the model number on the system rating plate to the listings in Table 2–5 on page 2–9 to determine the unit's model number, system power requirements, and power available for on–board peripherals.

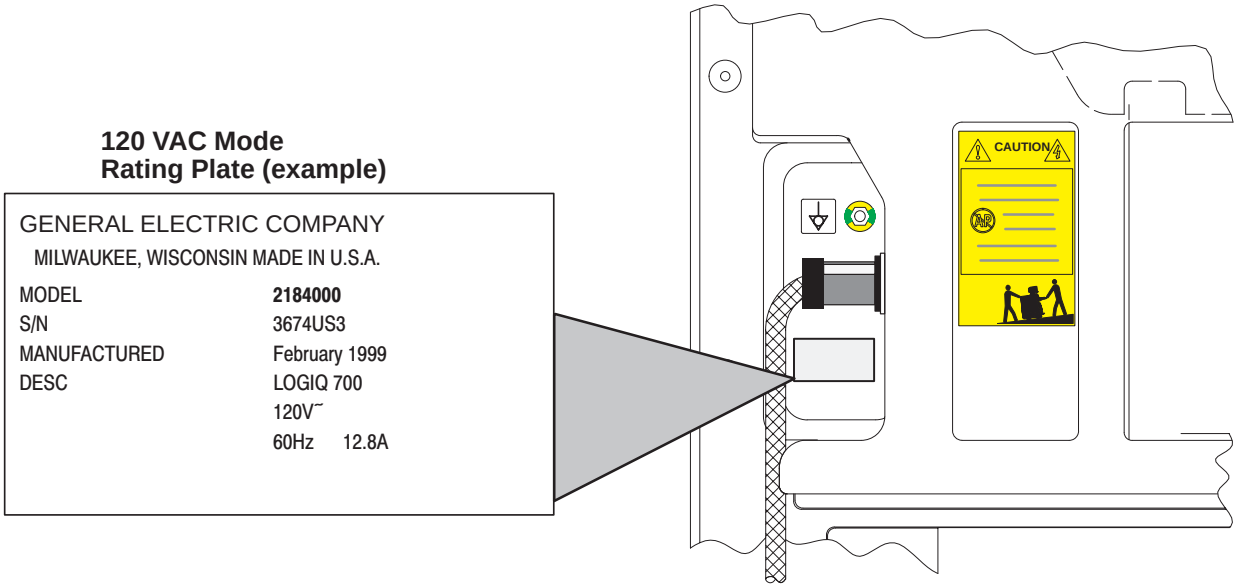

LOCATION OF RATING PLATE
ILLUSTRATION 3–4

Check the Isolation Transformer Wiring. If there is any doubt about the system power requirements or the power available for on–board peripherals, check the wiring to the terminal block of the isolation transformer. (See Illustration 3–5.) For access, remove the right side cover. Then compare the actual wiring to Table 3–2.

Check for Other Significant Configuration Differences. Other differences that affect the units adaptability to different power sources are the size and rating of circuit breakers CB1 and CB2, the MOV, and the power cord of the AC Power System. (See Section 9).

3–5–1 Check the Unit Configuration (Continued)

TABLE 3–2
WIRE, SHUNT, AND JUMPER CONNECTIONS TO ISOLATION TRANSFORMER

Model Number	2184000 –4, –9, –14	2184000, –6, –11	21840000– 2, –7, –12	2184000 –3, –8, –13	2184000 –3, –8, –13
Source Voltage → **Peripheral Voltage →**	**100 VAC** **100 VAC**	**120 VAC** **120 VAC**	**220 VAC** **120 VAC**	**220 VAC** **220 VAC**	**240 VAC** **240 VAC**
Shunts/***Jumpers***[1]	1&2 5&6 9&10 13&14	1&2 3&4 9&10 11&12	2&3 9&10 11&12	2&3 10&11	2&3 10&11
Line 1 from Line Filter **WHT**	1	1	1	1	1
Line 2 from Solid State Relay **BLK**	6	3	6	6	4
SSR Bd J3–1 or –2 **YEL**	7	7	7	7	7
SSR Bd J3–1 or –2 **YEL**	8	8	8	8	8
Load 1 to CB2–1 (and CB4–1[2]) **WHT**	9	9	9	9	9
Load 2 to CB2–3 **BLK**	13	12	12	14	12
Load 2 to CB4–3 **RED**	11	11	11	11	11
to CB3–1 (PS1) **WHT**	15	15	15	15	15
to CB3–3 (PS1) **BLK**	16	16	16	16	16
ground **GRN/YEL**	17	17	17	17	17

1Connection from 2 to 5, if required, is made with a black, 12–gauge, jumper. All other connections listed in this row are made with shunts.

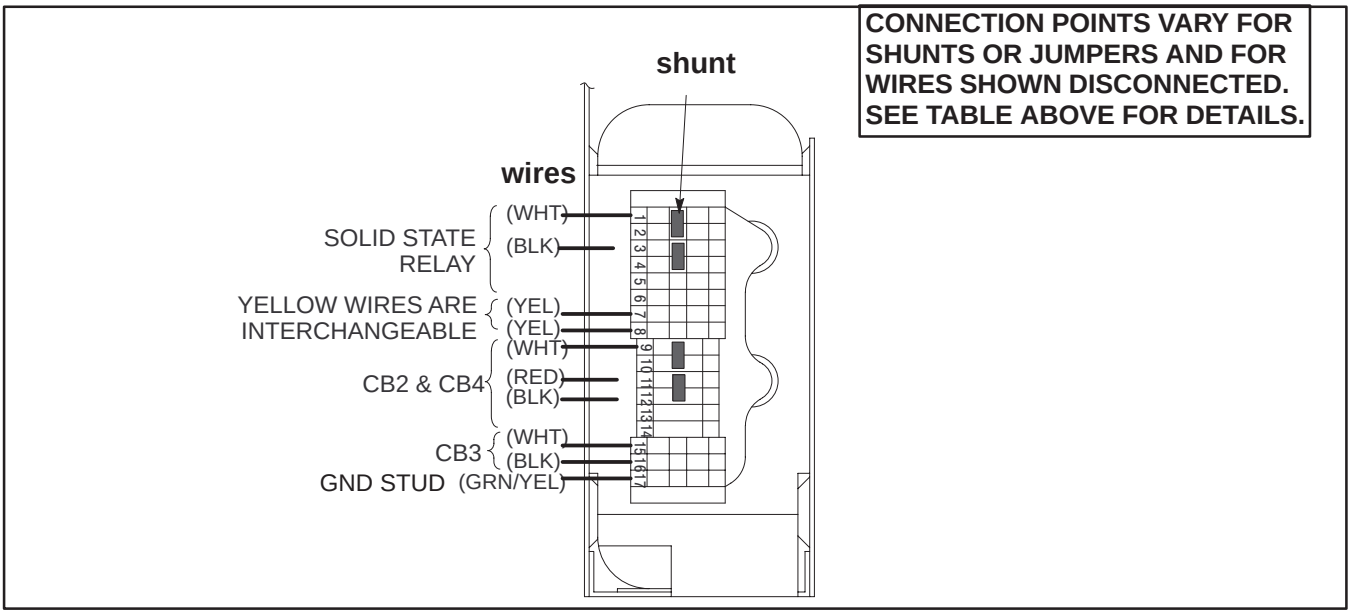

ISOLATION TRANSFORMER TERMINAL BLOCK SHOWING SOME POSSIBLE WIRE, SHUNT, AND JUMPER CONNECTIONS
ILLUSTRATION 3–5

3–5–2 Test the Unit Grounding

Test the LOGIQ™ 700 and its power cord grounding circuit as described in the checklist below. Use the same checklist to test any external peripheral that is used in the vicinity of the LOGIQ™ 700..

✓	Step	Procedure
	1	Verify the AC outlet passed its safety test.
	2	Inspect the unit's power cord, plug and strain relief for any signs of poor continuity or damage.
	3	Measure the resistance between the ground pin of the power cord facility plug and the ground stud on the rear of the console. (When checking a peripheral, use any bare metal surface on the peripheral chassis in lieu of the ground stud.) Flex the cord near the plug and near its connection to the chassis during the resistance measurement. **Ground wire resistance should be less than 0.15 Ω.**

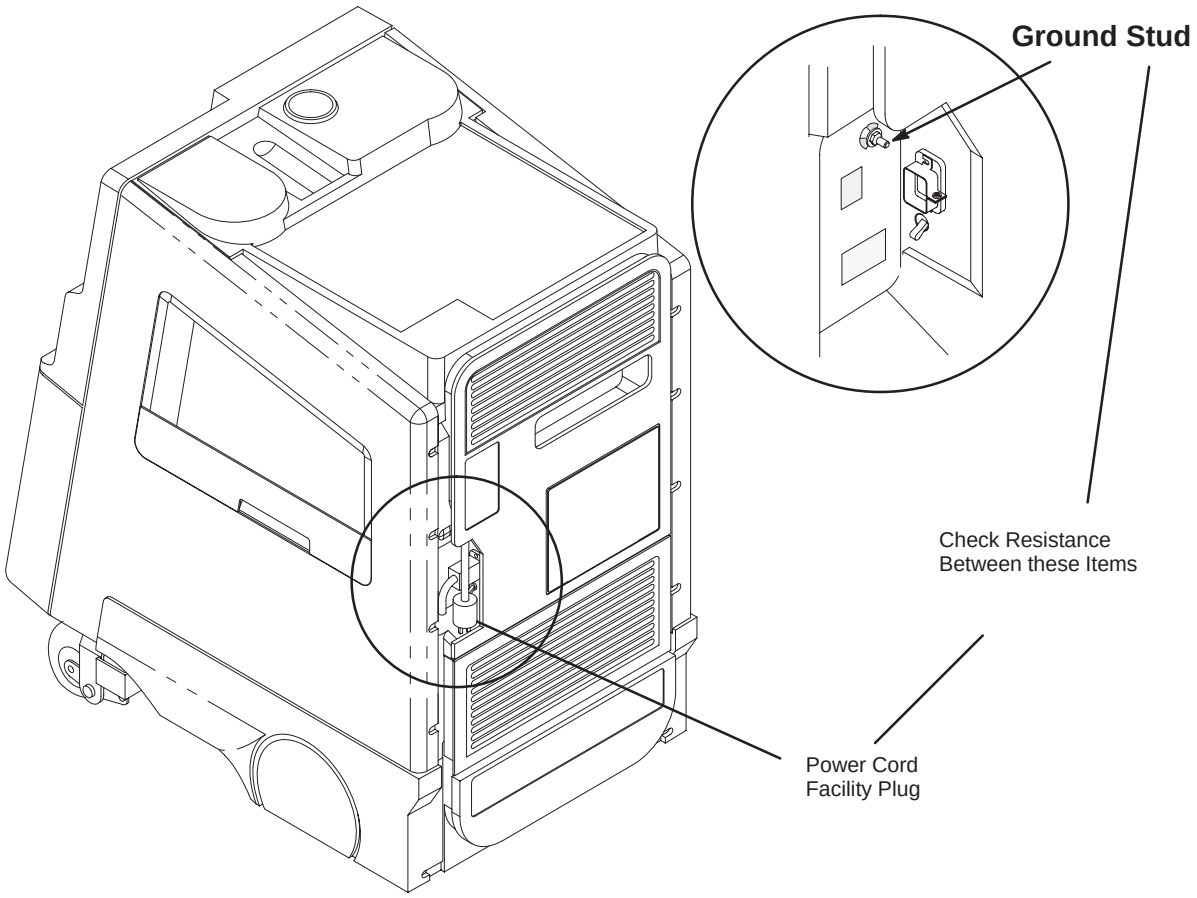

RESISTANCE TEST OF UNIT GROUNDING
ILLUSTRATION 3–6

3–6 COMPLETING THE INSTALLATION

3–6–1 Anchor the Unit (If Required)

At sites where earthquakes are likely to occur, anchoring the unit to the floor may be required. If so, use the seismic anchors at the rear of the unit. The anchors are threaded to accept M10 bolts.

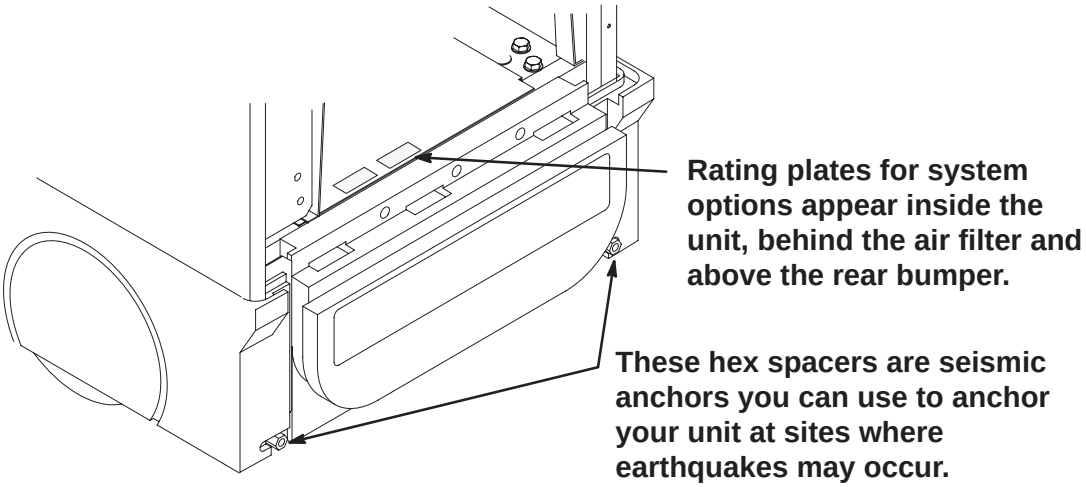

LOCATIONS OF SEISMIC ANCHORS AND OPTION RATING PLATES
ILLUSTRATION 3–7

3–6–2 Unpack and Install the Probes and Options

✓	Step	Procedure
	1	**Unpack the separately packed transducers**. Retain their protective lens caps and shipping boxes.
	2	**Handle probes with care**. Carefully hold the scanning end of the probe whenever you move or connect one.
	3	**Attach and activate each probe to check it.** • Place the probe's twist lock to the 3 o'clock position. • Push the probe connector into the XDIF connector. • Twist the latch to the 7 o'clock position. Take less than 1 second to do this. • Lift or use **[Code S]** to activate a probe. Note: Probe files are already on system.
	4	**If there are options that need to be loaded, insert each MOD disk** into drive. The applications options will be in effect after the system is booted again.
	5	Verify that **PRESETS [Code P]** describe the application and peripheral operation the user desires.
	6	OPTION: Install InSite modem; refer to 46–030409.
	7	Access diagnostic software and check the Error Log, Power Up Log #00 and Configuration Log to verify there are no system problems. (Refer to Section 6.)

3–6–3 Test the Unit Chassis For Leakage Current

Note

When the unit leaves manufacturing it has been tested and has passed a leakage current test, so it isn't required to be performed during installation of the unit. A leakage current test of the unit should be performed whenever a AC component is replaced. Those components consist of: The power cord, Circuit Breakers CB1 thru CB4, the MOV, the Line Filter FL1, the On/Off(standby) switch, the SSR Board (E1A1), The Isolation Xfmr (E1 T1), the Outlet Strip (E1 A2), or either power supply (E1 PS1 or E1 PS2).

Test Description. Leakage is the electrical current that could flow through the patient, sonographer, or service person in the event a ground wire broke. This test checks that the chassis is isolated from the power. The probes and peripherals also require similar testing.

The unit's power plug is disconnected from its normal AC power source outlet and plugged into the leakage tester. The leakage tester is connected to the normal AC power source outlet. Measurements are made with the unit's power switch ON and OFF, the tester's polarity switch set to Normal and Reversed, and the momentary switch in tester's ground line closed and open. **The highest current reading for each group of switch settings is recorded.** This actual reading is compared to maximum allowable readings to determine if the test passes/fails.

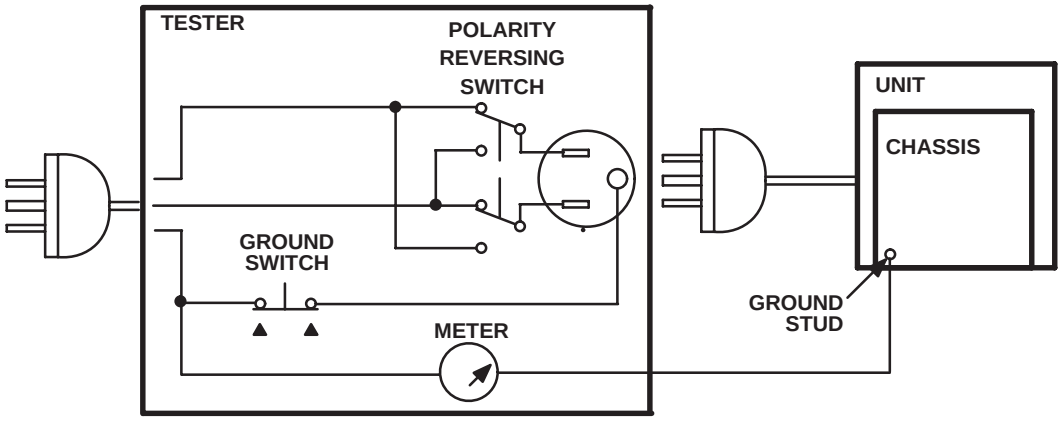

DIAGRAM OF TEST SETUP FOR CHASSIS LEAKAGE CURRENT
ILLUSTRATION 3–8

Test Procedure. Test a unit for leakage current as detailed in steps below. If test fails, see page 3–20.

1 . Set Main circuit breaker (CB1) on LOGIQ™ 700 to off (O).

2 . Connect unit's power cord to tester.

3 . Turn tester's Polarity Reversing Switch to NORM (normal).

4 . Turn tester's meter off.

5 . Connect tester's meter probe to ground stud on rear of unit.

6 . Connect tester's power cord to power source outlet.

DANGER

ELECTRICAL HAZARD
To avoid shocks, do not touch the unit while the test meter's ground switch is OPEN (depressed).

3–6–3 Test the Unit Chassis For Leakage Current (Continued)
. . . . . Test Procedure (Continued)

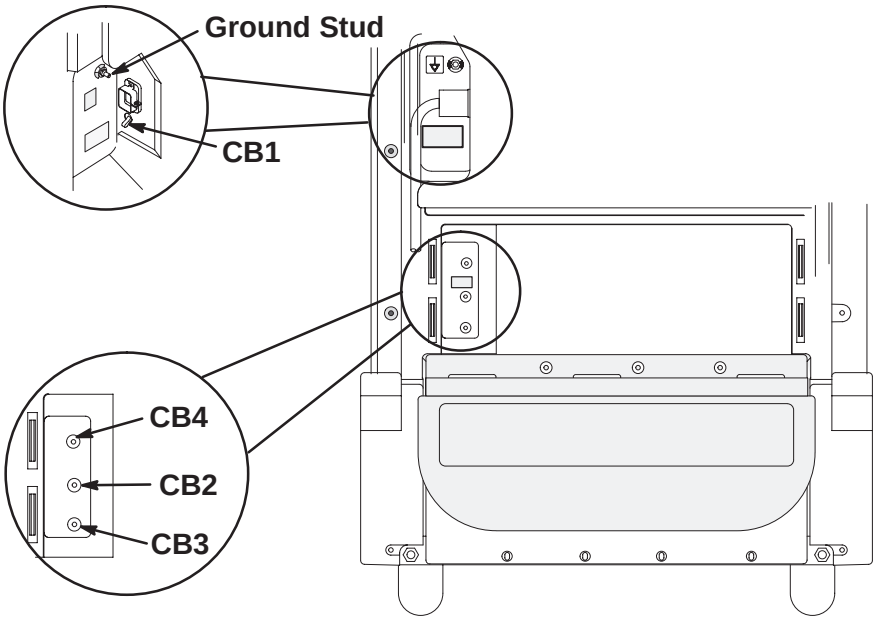

REAR VIEW OF UNIT SHOWING CIRCUIT BREAKERS AND GROUND STUD
ILLUSTRATION 3–9

CAUTION **To alter Polarity Reversing Switch setting: turn unit power switch off, wait at least 10 seconds, reset Polarity Reversing Switch, and turn on unit power switch again. Changing polarity without bleeding charges off capacitors could destroy the power supplies.**

7 . Record highest current measurement of meter for each set of switch positions shown in Table 3–3.

TABLE 3–3
DATA SHEET FOR CHASSIS LEAKAGE CURRENT TEST

Date Tested:

Unit Power Switch	Tester Ground Switch	Polarity Reversing Switch	Max Leakage Current (μA)		Actual Leakage Current
			Within USA	Outside USA	
On	Closed	Normal	100	100	
On	Open	Normal	300	500	
Off	Closed	Normal	100	100	
Off	Open	Normal	300	500	
On	Closed	Reversed	300	500	
On	Open	Reversed	300	500	
Off	Closed	Reversed	300	500	
Off	Open	Reversed	300	500	

3–6–4 Test the Probes for Leakage Current

Note

Checking the probes for leakage current at installation is no longer required. A leakage current test of a probe should be performed once a year on surface probes, twice a year on endocavity probes, or whenever probe damage is suspected.

Test Description. This test measures the current that would flow through the patient via the probe if the patient touches some other grounded surface during the exam.

Measurements are made from the probe to ground with the unit's ground open and closed, the unit's power on and off, and the power polarity normal and reversed. For each combination of these factors, a measurement is made while the probe is activated. The test is graded (passed/failed) based on the worst case results.

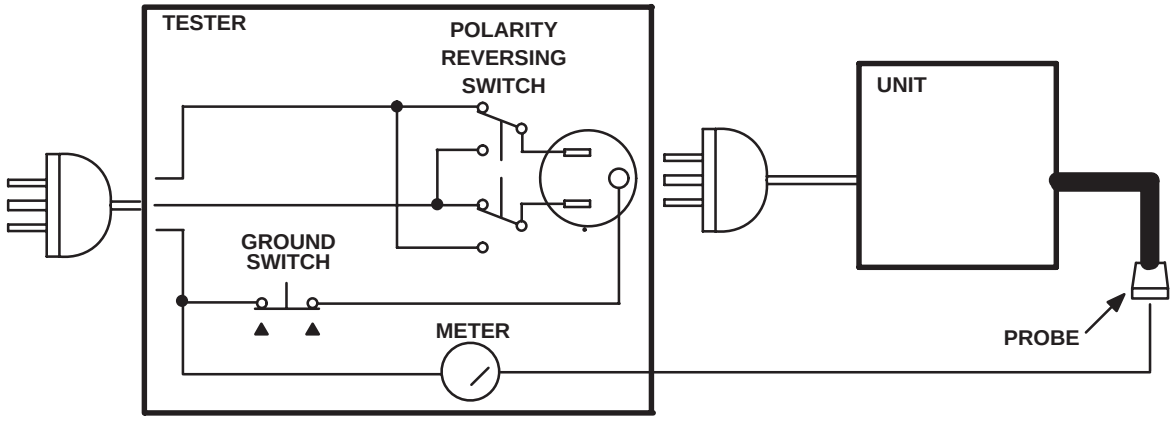

DIAGRAM OF TEST SETUP FOR PROBE LEAKAGE CURRENT
ILLUSTRATION 3–10

Test Procedure. Test a probe for leakage current as detailed in steps below. If test fails, see page 3–20.

CAUTION **To protect the unit's power supplies, it is highly recommended that you use a Probe Adapter (2107545–2) during this test.**

1. Set Main circuit breaker (CB1) on LOGIQ™ 700 to off (O).
2. Connect unit's power cord to tester.
3. Turn tester's Polarity Reversing Switch to NORM (normal).
4. Turn tester's meter off.
5. Connect tester's power cord to power source outlet.
6. Attach the probe to the unit. Use different XDIF connections for each probe to insure that all four connections are tested.

Note

More than one probe can be attached to the unit, but unhook and test only one probe at a time.

7. Unhook the probe and apply a liberal amount of gel to the lens. Wrap the probe in aluminum foil insuring good contact with the probe's lens, and suspend the probe from its cord or place it on an insulated surface.

3–6–4 Test the Probes for Leakage Current (Continued)
. . . . . Test Procedure (Continued)

DANGER

ELECTRICAL HAZARD
To avoid shocks, do not touch the unit chassis or the aluminum foil around the probe while the test meter's ground switch is OPEN (depressed).

CAUTION

To alter Polarity Reversing Switch setting: turn unit power switch off, wait at least 10 seconds, reset Polarity Reversing Switch, and turn on unit power switch again. Changing polarity without bleeding charges off capacitors could destroy the power supplies.

8 . Hold the tester's meter probe against the aluminum foil and record the highest current measurement of the meter for each set of switch positions shown in Table 3–4 (for Type BF probes and Tee Probes) or Table 3–5 (for Type CF probes and interoperative and surgical probes).

TABLE 3–4
DATA SHEET FOR TYPE BF PROBE LEAKAGE CURRENT TEST

Probe Tested:
Date Tested:

Unit Power Switch	Tester Ground Switch	Polarity Reversing Switch	Max Leakage Current (μA)		Actual Leakage Current
			Within USA	Outside USA	
On	Closed	Normal	50	100	
On	Open	Normal	50	500	
Off	Closed	Normal	50	100	
Off	Open	Normal	50	500	
On	Closed	Reversed	50	500	
On	Open	Reversed	50	500	
Off	Closed	Reversed	50	500	
Off	Open	Reversed	50	500	

TABLE 3–5
DATA SHEET FOR TYPE CF PROBE LEAKAGE CURRENT TEST

Probe Tested:
Date Tested:

Unit Power Switch	Tester Ground Switch	Polarity Reversing Switch	Max Leakage Current (μA)		Actual Leakage Current
			Within USA	Outside USA	
On	Closed	Normal	10	10	
On	Open	Normal	10	50	
Off	Closed	Normal	10	10	
Off	Open	Normal	10	50	
On	Closed	Reversed	10	50	
On	Open	Reversed	10	50	
Off	Closed	Reversed	10	50	
Off	Open	Reversed	10	50	

3–6–5 Test the Peripherals For Leakage Current

Note

Checking the peripherals for leakage current at installation is no longer required. A leakage current test of a peripheral should be performed whenever a new one installed on the unit.

Test Description. This test verifies that the power source is isolated from the surface of a peripheral. Peripherals integrated with the unit are tested when the chassis is tested for leakage current. This test is for peripherals outside the unit. The testing meter is connected from accessible metal parts of the case to ground. Measurements should be made with the peripheral ON and OFF, with the power line polarity Normal and Reversed. **Record the highest reading of current.**

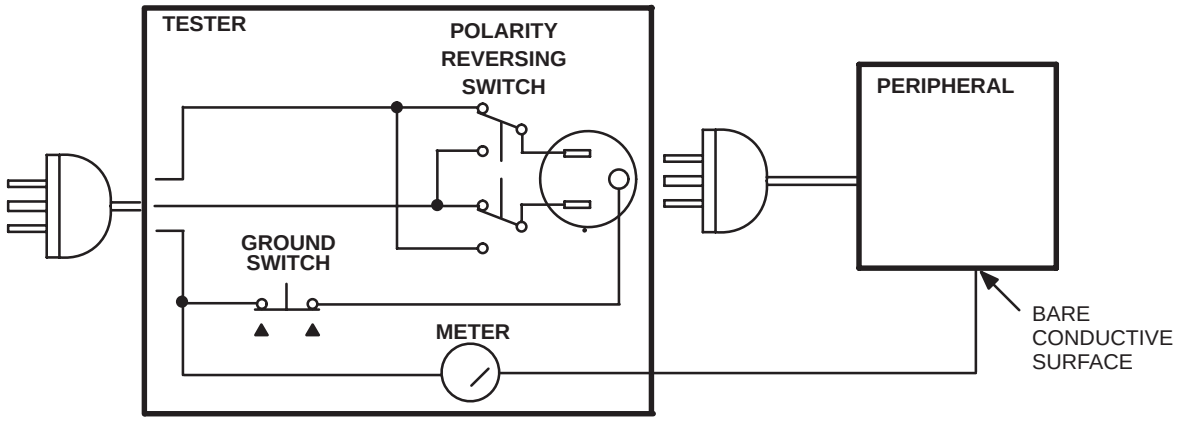

DIAGRAM OF TEST SETUP FOR PERIPHERAL LEAKAGE CURRENT
ILLUSTRATION 3–11

Test Procedure. Test a probe for leakage current as detailed in steps below. If test fails, see page 3–20.

1 . Turn power switch/circuit breaker on peripheral off.

Note

Test the external peripheral's power cord for ground continuity; it should be less than 0.15 ohms. See page 3–11.

2 . Connect peripheral's power cord to tester.

3 . Turn tester's Polarity Reversing Switch to NORM (normal).

4 . Set tester's meter range selector for a reading around 50 microamperes.

5 . Connect tester's meter probe to a bare conductive surface on the peripheral. When the ground switch on the tester is open, the peripheral must not be grounded by any means other than the path through the meter.

6 . Connect tester's power cord to power source outlet.

3–6–5 Test the Peripherals For Leakage Current (Continued)

DANGER

ELECTRICAL HAZARD
To avoid shocks, do not touch the peripheral chassis while the test meter's ground switch is OPEN (depressed).

CAUTION

To alter Polarity Reversing Switch setting: turn unit power switch off, wait at least 10 seconds, reset Polarity Reversing Switch, and turn on unit power switch again. Changing polarity without bleeding charges off capacitors could destroy the power supplies.

7 . Follow Table 3–6 to complete remaining steps. Repeat entire procedure for any other external peripheral in the same area as the LOGIQ™ 700.

TABLE 3–6
DATA SHEET FOR PERIPHERAL LEAKAGE CURRENT TEST

Peripheral Tested:
Date Tested:

Peripheral Power Switch	Tester Ground Switch	Polarity Reversing Switch	Max Leakage Current (μA)		Actual Leakage Current
			Within USA	Outside USA	
On	Closed	Normal	100	100	
On	Open	Normal	300	500	
Off	Closed	Normal	100	100	
Off	Open	Normal	300	500	
On	Closed	Reversed	300	500	
On	Open	Reversed	300	500	
Off	Closed	Reversed	300	500	
Off	Open	Reversed	300	500	

3–6–6 Correcting Leakage Current Problems

Note

No outlet tester can detect the condition where the neutral (grounded supply) wire and the ground (protective earth) wire are reversed. If later tests indicate high leakage currents, this should be suspected as a possible cause. An electrician should visually inspect the outlet wiring.

If a leakage current test fails, use Table 3–7 to help isolate and correct the problem. First locate the name of the failed test in the **Test Failed** column. Then try the check/correct actions in the same row, one at a time until the problem is resolved.

If the problem cannot be resolved using the actions described in Table 3–7, continue isolation by removing the probes, external peripherals, then the on board ones, one at a time while monitoring the leakage current measurement. If the situation cannot be corrected, submit a GEWINS TYPE C CQA Report to document a regulatory/noncompliance issue. Remove unit from operation.

TABLE 3–7
TROUBLESHOOTING PROCEDURES FOR LEAKAGE CURRENT PROBLEMS

Test Failed	Check/Correct
Chassis	Check the ground on the power cord and plug for continuity. Ensure cord is not broken, frayed, or intermittent. Replace any defective part. Tighten all grounds. Ensure star washers are under all ground studs. Inspect wiring for bad crimps, poor connections, or damage. Test the designated outlet; verify the outlet is grounded. If not, notify the user or owner to correct any deviations, and, as a work around, check and temporarily use any other outlet that is within reach and properly grounded.
Probe	Test the probe in another XDIF connector. If you suspect a bad connector, test probe leakage to that particular XDIF connector with a different probe. • If excessive leakage current is slot dependent, inspect that XDIF connector for bent pins, poor connections, and ground continuity. • If the problem stays with the probe, replace the probe.
Peripheral	Tighten all grounds. Inspect wiring for bad crimps, poor connections, or damage. Measure the ground continuity of the external peripheral power cord. It should be less than 0.15 ohms. If the power cord is detachable, the limit is 0.20 ohms. Test the AC outlet used by this peripheral; verify it is grounded. Notify the user or owner to correct any deviations. As a work around, check the other outlets to see if they could be used instead.

3–7 TRANSPORTING THE UNIT

Follow these guidelines to assure your premium ultrasound unit operates correctly and safely after it has been moved to another room or site.

- **Before moving, eject any MOD disk to prevent damaging the drive.**
- Store all loose parts, like gel and optical disks, in the unit pockets.
- Before moving to a new site, remove and pack transducers in their original cases or in soft cloth or foam to prevent damage.
- Disconnect external devices from the back panel.
- Unplug the power cord from the AC outlet and wrap it counter clockwise (CCW) in its slot. DO NOT TUCK PLUG UNDER THE AREA WHERE IT IS ATTACHED TO THE CONSOLE. This could distort/loosen the connection.
- One adult can usually move the unit along a level surface for short distances. Otherwise, two people or more should move the machine. Avoid inclines steeper than ten degrees and bumps higher than one inch. Do not let the unit strike walls or door frames. Limit the speed of movement to a slow, careful walk.
- Know how the foot brake on this unit works and be ready to use it. It is located near the floor on the front side. Set it whenever you stop.
- If you will be moving your unit to other sites, save and reuse the original packaging. GE Medical Systems representatives or their assignees should perform the move. A specially designed van for this unit should also be used.
- The van should have good shocks and a door large enough for the unit with its monitor and any on board peripherals to clear.
- If a lift is used, be sure it can handle at least 360 kg (800 lbs) although a 400 kg capacity would be safer. Don't remain on the lift with the unit.
- Load the unit into the van very carefully. Keep it over its center of gravity. Secure the unit with straps, keeping it still and upright yet not damaging the control panel.
  <u>DO NOT lay the unit down !</u>
  <u>DO NOT attempt to hold it in place by hand!</u>
- Prevent vibration damage by driving cautiously. Avoid unpaved roads, excessive speeds, and erratic stops or starts.
- Repeat the Installation Checklist at the new site.

Intentionally blank

SECTION 4 – FUNCTIONAL CHECKS AND SITE LOG

TABLE OF CONTENTS

SECTION	TITLE	PAGE
4–1	PURPOSE OF SECTION	4–2
4–2	GENERAL PROCEDURES	4–3
4–2–1	Power On/Boot Up	4–3
4–2–2	Using the Magneto Optical Drive (MOD)	4–4
4–2–3	Archiving and Loading Presets	4–4
4–3	FUNCTIONAL CHECKS	4–6
4–3–1	Required Equipment	4–6
4–3–2	Option Checks	4–6
4–3–3	Basic System Checks	4–9
4–4	SITE LOG	4–20

4–1 PURPOSE OF SECTION

This section provides procedures for quickly checking the major functions of the LOGIQ™ 700. This section also offers some pages you may hard copy and use for a paper record of the service that has been done on the system.

The functional check procedures form part of the Installation Checklist found in Section 3 and should be performed during installation. During the manufacturing process a detailed functional check has been performed at least twice. During installation, the OPTION checks are the items which require customization to user preferences. For MODE checks, refer to the illustrations in the following chart to quickly verify functionality of the system.

MODES OF OPERATION	
MODE	**ILLUSTRATION**
B–MODE	4–4; page 4–9
M–MODE	4–6; page 4–13
B–Plus COLOR MODE	4–9; page 4–15
PW MODE	4–11; page 4–17
Measurement and Multi–image Checks	4–19

The functional check procedures are also the basic checks to use before and after performing service.

4–2 GENERAL PROCEDURES

4–2–1 Power On/Boot Up

Note

After turning off the system, wait at least ten seconds before turning it on again. The system may not be able to boot if power is recycled too quickly.

CAUTION

SYSTEM REQUIRES ALL COVERS
Operate this unit only when all board covers and frame panels are securely in place. The covers are required for safe operation, good system performance and cooling purposes.

When power is applied to the LOGIQ ™ 700, the host, located on the MC board, initializes the software and hardware and makes some basic checks on the health of the unit. (See Table 4–1.) Boot–up status is reported through the softkey display.

The status messages on the softkey display are in English. For non–English speaking sites, the system can be programmed to display from one to five asterisks to indicate boot–up status. The last item listed is either '*****' or the software version. To toggle between English and asterisks, hold down **[Code + Shift ⇑]** and press the **[V]** key. To view the software information at any time after bootup, hold down: **[Code + Shift ⇑ + X + C]**.

Boot–up status messages can be observed on an external computer through the SERVICE port on the bulkhead on the rear of the unit. An external computer can also be connected to the unit through the DB9 connector on the MC board if the serial cable from the backplane to the bulkhead is disconnected.

TABLE 4–1
POWER–ON/BOOT–UP TESTS

Power Up Tests	Description
Host	The Host initializes its DRAM and loads its boot code.
SCSI bus	The Host checks that the SCSI drives [the hard drive and the magneto optical drive (MOD)], are present and accessible. The Host also tests the hard drive and attempts to repair any problems.
VMEbus Board locate	Runs system configuration check to see whether all boards are present and in their correct slot. The Host writes to each board and compares what it reads with the board's slot number. This test is a basic check of the VMEbus and BE to FE communication.
System init	Resets then sets up hardware according to presets, defaults, power–down state. Checks and downloads code to the Scan Sequencer DSP, Doppler Processor Master and Slave DSPs, TLM graphics processor (GSP), and OPI/CPU processor. This step initializes all software tasks and configures the peripherals.
Power supplies	Checks Front End and Back End power signals.
Probe data	The system downloads beamforming data to the TD boards for the active probe.

4–2–2 Using Magneto Optical Drive (MOD)

1 . Before installing an MOD disk in the MOD, check the disk for loose hardware or damaged labels which would jam inside the MOD. Also ensure that the slide switch in one corner of the disk is set so that the disk is write enabled (disk hole closed).

2 . Insert the disk into the MOD with the label facing up.

CAUTION

Never move the unit with a disk in the MOD because the drive actuator will not be locked and the MOD could break. Avoid mechanical ejection (method 3.d below) which leaves the actuator unlocked and the MOD susceptible to damage if moved. If forced to use method 3.b, reboot the system, insert and eject a known good diskette using one of the other methods.

3 . There are a number of methods to eject a disk from the MOD. Ejection is automatic in some cases. Manual ejection methods, listed in preferred order of use, are:

a . Use the softkey choice under **Archive Menu** –or– click **Image Presets** up then click the left softkey switch up for ARCHIVE, then toggle the switch under EJECT MOD.

b . Press EJECT button on the MOD while system is ON.

c . Hold EJECT button while the system is booting.

d . Insert the end of a paper clip into the hole next to the EJECT button while system power is OFF.

4–2–3 Archiving and Loading Presets

Note

Always save presets before any software reload. This action is necessary to ensure that the presets loaded after the software reload are as up–to–date as possible.

All user presets except changes to Summary, Anatomy, and Biometry pages, can be saved on an MOD disk for reloading on the system.

Presets shouldn't be saved on the same MOD disk as images, because the Archive Menu lists the images but not the presets stored on a MOD disk.

1 . To archive Presets on a MOD disk:

a . Obtain a blank disk or a disk to be recycled. Check the disk to insure that there is no loose hardware or labels. Set the slide switch to write enable (open the hole) on the MOD disk. Then insert the MOD disk into the MOD.

b . Click the **Image Presets** toggle switch up. The Modify softmenu appears.

c . Click the **ARCHIVE** softkey up. The Archive Presets softmenu appears.

4–2–3 Archiving and Loading Presets (Continued)

Note

The system software allows formatting a MOD disk containing L700 System Software. BE CAREFUL TO AVOID REFORMATTING A DISK WITH SOFTWARE THAT IS STILL NEEDED.

Note

To format the MOD disk, click the **ARCHIVE FORMAT** softkey up. The Archive Format softmenu appears. Then click the **FORMAT YES** softkey up. (At least one probe has to be attached in order for this to work.) The system reformats the disk in the MOD.

d . To save the user presets, click the **SAVE TO MOD** softkey up. The Save User Presets softmenu appears. Click the **SAVE YES** softkey up. The system saves all user presets, except changes to the Summary, Anatomy, and Biometry pages.

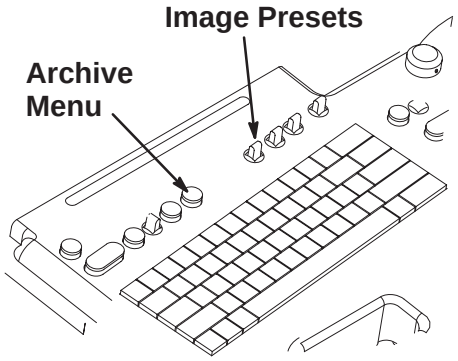

ARCHIVING AND LOADING PRESETS
ILLUSTRATION 4–1

e . When the presets are loaded onto the MOD disk, the Archive Presets softmenu reappears. Click the **EJECT MOD** softkey up. Label the MOD disk to indicate that it contains presets and include the date, console serial number, software revision and site name.

2 . To load presets from a MOD to the system:

a . Check the MOD disk containing the presets to insure that there is no loose hardware or labels. Then insert the MOD disk into the MOD.

b . Click the **Image Presets** toggle switch up. The Modify softmenu appears.

c . Click the **ARCHIVE** softkey up. The Archive Presets softmenu appears.

d . Click the **LOAD FROM MOD** softkey up. The system loads the presents from the MOD disk to the system. When the loading is complete, the system reboots and automatically ejects the MOD.

4–3 FUNCTIONAL CHECKS

4–3–1 Required Equipment

Items required to perform the functional checks are as follows:

- Probe
- Phantom (Model 403GSX Phantom) manufactured by RMI is recommended for 5 MHz or lower B image scanning. However, any echo block or phantom with defined reference points will be adequate.

4–3–2 Option Checks

Step	Check	Expected result
1	Verify that peripherals external to the system are turned on. Power on and boot up LOGIQ™ 700.	
2	Freeze an image that can be printed. Press **(P1)**.	**(P1)** flashes while peripheral device(s) assigned by Presets to **(P1)** button exposes/archives the image. Verify image is actually printed or archived. If "`Invalid command in this mode`" appears, the Presets may need correction. Refer to User Manual.
3	Repeat step 2 using **(P2)**, [Shift+ **P1**], and [Shift+**P2**].	
4	Place a tape into the VCR. Press **Record/Pause** to record the current display to the VCR. Press **Mic** on and speak. Press **Play/Stop** to see and hear what was taped.	None. During VCR record mode, a VCR icon is displayed. An MIC icon is displayed while **Mic**. is depressed. During VCR playback, the active scan image is replaced by the VCR playback image and the recorded message can be heard.
5	Activate print or recording functions for all other peripherals used with this system. Use all available expose mechanisms including buttons, wired remotes, wireless remotes, foot-switches, etc.	Verify that all print and recording functions work as assigned.

4–3–2 Option Checks (Continued)

Step	Check	Expected result
6	If site has **Digital Archive,** verify that images are going to the device preset to accept them. Press **(Archive Menu)** and use **Image Archive**.	You can **preset** a LOGIQ™ 700 Print key to **MOD** rather than HARD DISK. When you assign a Print key to the MOD, the system will automatically queue the Frozen image for transfer to an MOD disk if it's a single image and an image disk with available space is in the MOD. Otherwise someone must select images and use the Archive Menu and the **Copy Images** or **Print Queue**. If you are making files for another computer or the LOGIQ™ 700, use **Copy**. If you are making an MOD disk for a Print Device, use the **Print Queue** choice.
7	If site has **DICOM Option**, type **[Code P]**, go to page 5 of General System Presets, perform ECHO TEST. The result should be 'GOOD.' Send an image to a DICOM device. Verify the image successfully reached the device.	Once you have successfully configured devices connected to the LOGIQ™ 700 through its SCSI, ethernet or serial ports, you can make use of four key assignments to prescribe a combination of actions that store or print or do both to images. You do this by placing one or more asterisks under the four KEY columns called **(P1)**, **(P2)**, SP1 **[Shift+P1]**, and SP2 **[Shift+P2]** on the **Printer Control Page** under General System Preset **[Code+P]** screen. Notice that there is a local storage choice for color (bigger files) and another for Black and White image files.
8	If site has **3D** Option: Freeze a B or B/CF image, roll trackball and select images to be included. Select CREATE 3D will offer two new menu screens.	Use one softkey menu to prescribe the desired view, the other to render that view or return to 2D Cine. Minimum Projection enhances dark objects and Max enhances bright objects.
9	If site has **InSite** Option: Call InSite for On Line Tests. Have system serial number and ID and modem phone number and model ready. Boot system with modem ON and connected. Enable InSite Access by typing: **[Code I]**.	While InSite checks communication, the LEDs on RD and SD (TD) will flicker. The OH LED will go out when InSite is disconnected. After a verbal exchange with InSite, leave modem ON and connected to system if this is acceptable to the customer. Refer to Direction 46–030409 for more information.
10	If site has **B Flow** Option: Press B Flow button. B Flow SoftMenu is displayed.	The B Flow display will be shown on the Monitor. Preset settings for B Mode are used while B Flow is active; there are no independent preset settings for B Flow. When you activate B Flow, the image remembers the imaging parameters set while in B Mode. (Refer to Illustration 4–2)
11	If site has **M Color Flow** Option: Press **M** (M Mode), then press **CF** (Color Flow)	Color Flow Mode and Color M Mode are Doppler Modes intended to add color–coded qualitative information concerning the relative velocity and direction of fluid motion within the B Mode or M Mode image. (Refer to Illustration 4–3)
12	If site has **Coded Excitation** Option: Go to the second B Mode SoftMenu. Click the CE softkey to ON.	CE focal zones are indicated by a "bow tie" rather than an arrow. The CE zone covers almost twice the area as the normal focal zone. (Refer to Illustration 4–4)
13	If site has **Tissue Harmonics** Option: Press Multi Freq. Click the B/M FREQ softkey with appropriate frequency, indicated by the letter T for tissue.	The message, "Configuring system. Please wait," appears while the probe's frequency changes. A "T" appears in reverse video next to the active probe indicator. (Refer to Illustration 4–4)

4–3–2 Option Checks (Continued)

B FLOW IMAGE
ILLUSTRATION 4–2

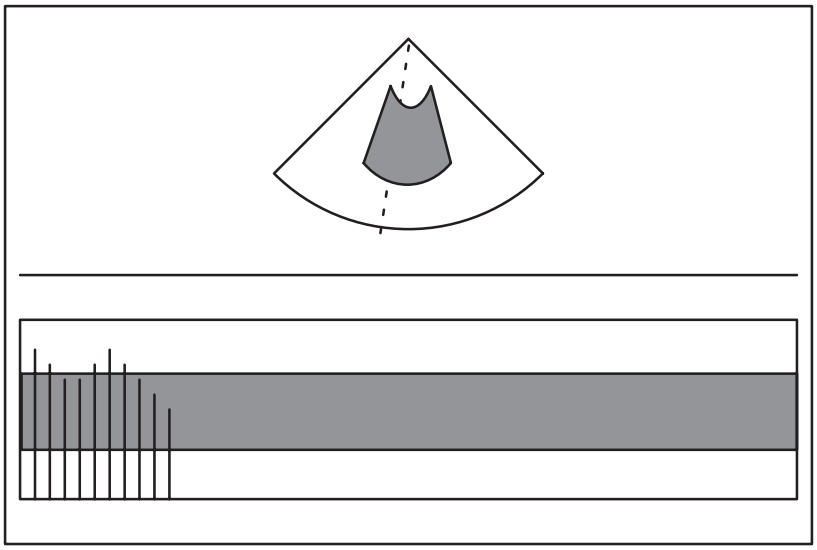

M COLOR FLOW IMAGE
ILLUSTRATION 4–3

4–3–3 Basic System Checks

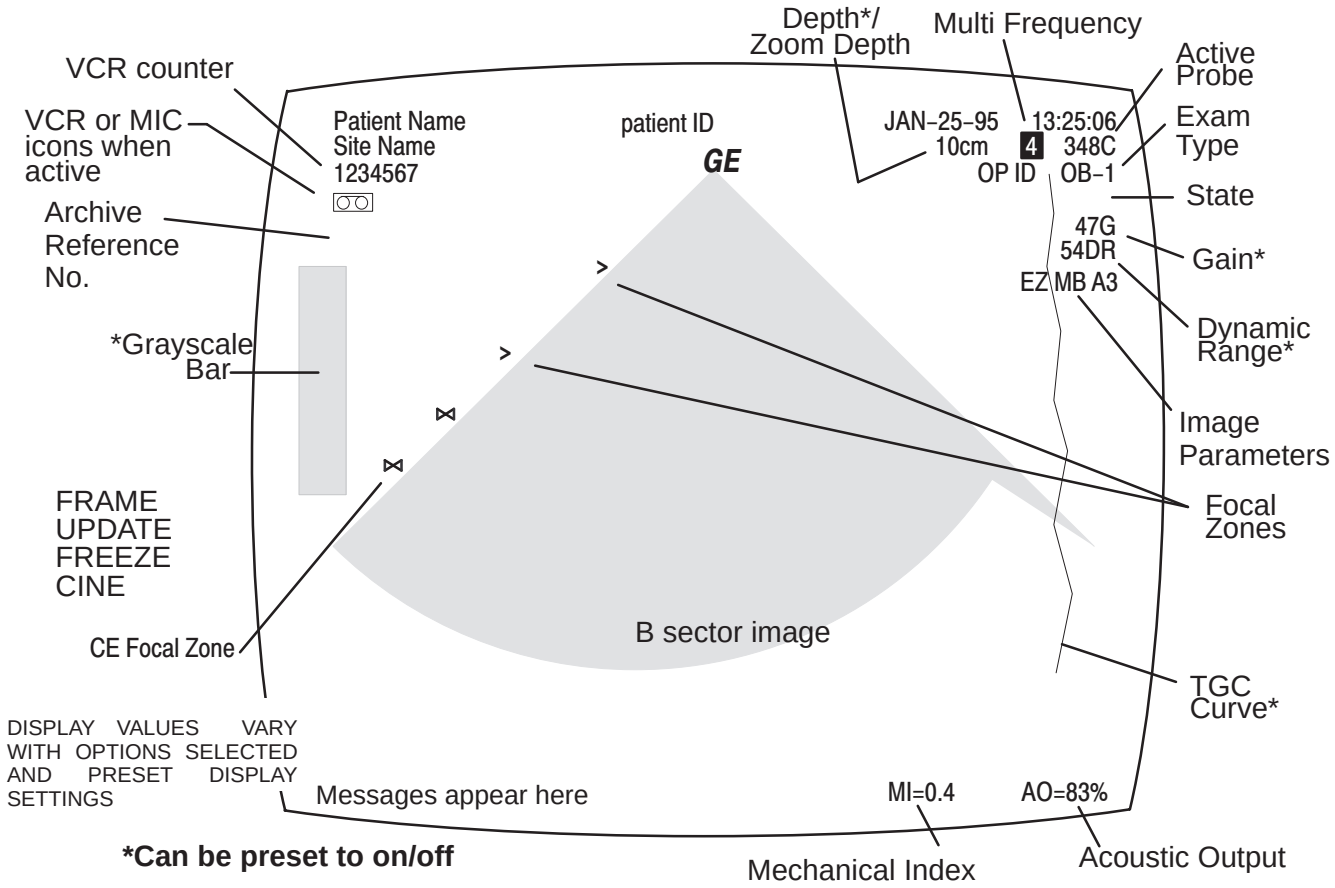

B–MODE DISPLAY SCREEN
ILLUSTRATION 4–4

4–3–3 Basic System Checks (Continued)

Step	Check	Expected result
	B–MODE CONTROLS	
1	Power On	After approximately a minute, the B mode screen should appear.
2	Lift one probe, scan phantom	Image should continually update.
3	Rotate **Gain** knob	Image gets brighter with CW rotation of **Gain** and dimmer with CCW rotation.
4	Click **Acoustic Output** up/down	**AO** value should go up to 100%. Image clarity should weaken as **AO** is lowered.
5	Press [**Code + M**] to select another grayscale Map. Click the **SELECT MAP** softkey. Press **Exit**.	The grayscale adjusts to each new Map selected. Default softkeys should reappear.
6	Click **B DYN RANGE** softkey to adjust dynamic range of B image.	**DR** value on image display changes. At lower **DR** values, image speckle fades and artifacts in the display become more pronounced from the background image.
7	Click **Depth** up/down	The Depth indicated at the top of the screen should decrease and increase to limits of the probe. Focal zone indicators (carets) should also adjust.
8	Click **Focus Number** up and down. With more than one focal zone caret present, click **Focus Position** up/down.	The number of focal zones (indicated by carets in image display) increases and decreases. The number depends on software, depth, zoom, and probe. The side of the image the carets appear on indicates scan direction. The same number of carets should remain in the image display, but move up/down in the image.
9	Slide **TGC** pots	If preset to display, the TGC curve should adjust at the equivalent depth of the pot's location to the image.
10	Press **Zoom**, roll trackball and use ROI rocker to position and size area of interest, then press **Zoom** again. Press **Zoom** again to exit.	The image area inside the region of interest should increase to fill the image screen. Image returns to normal size.
11	Press [**Code + A**] to reach **FRAME AVG** softkey. Press **FRAME AVG** softkey up, then down.	The number displayed at the bottom of the **FRAME AVG** softkey varies from 0 to 7 to indicate frames being used to make one image. Image becomes smoother and softer as number of frames increases.

4–3–3 Basic System Checks (Continued)

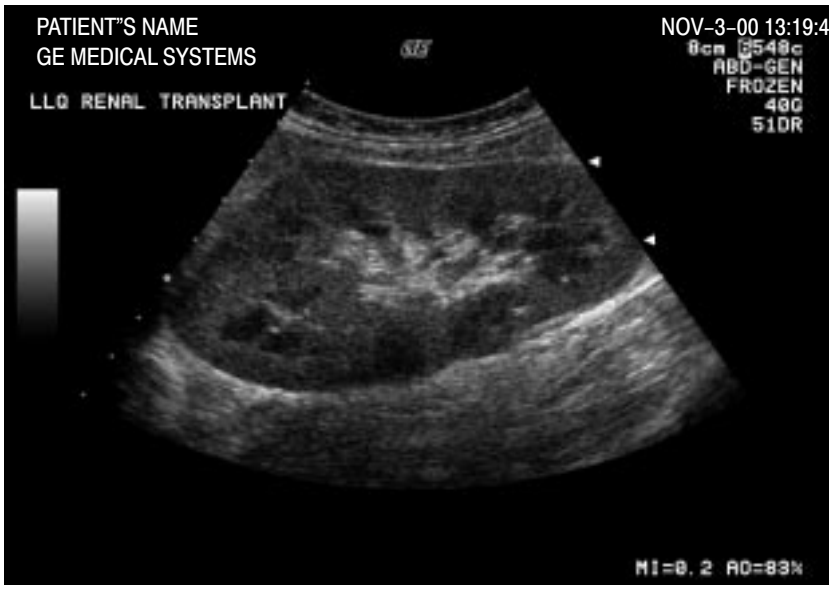

ACTUAL B IMAGE
ILLUSTRATION 4–5

4–3–3 Basic System Checks (Continued)

Step	Check	Expected result
B–MODE CONTROLS (Continued)		
12	Press **[Code + B]** to get B–Color softkeys. **EXPAND**. Next, operate **TINT WINDOW** softkey until number displayed in that softkey is **69%**. Now operate **TINT MAP** softkey. Operate **IMAGE PROCESS** softkey until full text of that softkey is **IMAGE PROCESS OFF.** Then press **Exit**.	Letter below **TINT MAP** in softkey varies from **A** thru **D** and color in image varies from: Map **A** orange to white Map **B** orange to yellow to blue to purple Map **C** purple to blue to white Map **D** yellow grn to white The B image returns to its gray color.
13	Press **Previous/Next** to display B Mode softkeys. Operate **B EDGE ENHNCE** softkey	The number displayed below **B EDGE ENHNCE** in the softkey varies from 0 to 7, depending on probe used, application used, and multi–frequency selection. Edges inside the focal area(s) should become lighter as the softkey number increases and darker as the softkey number decreases.

4–3–3 Basic System Checks (Continued)

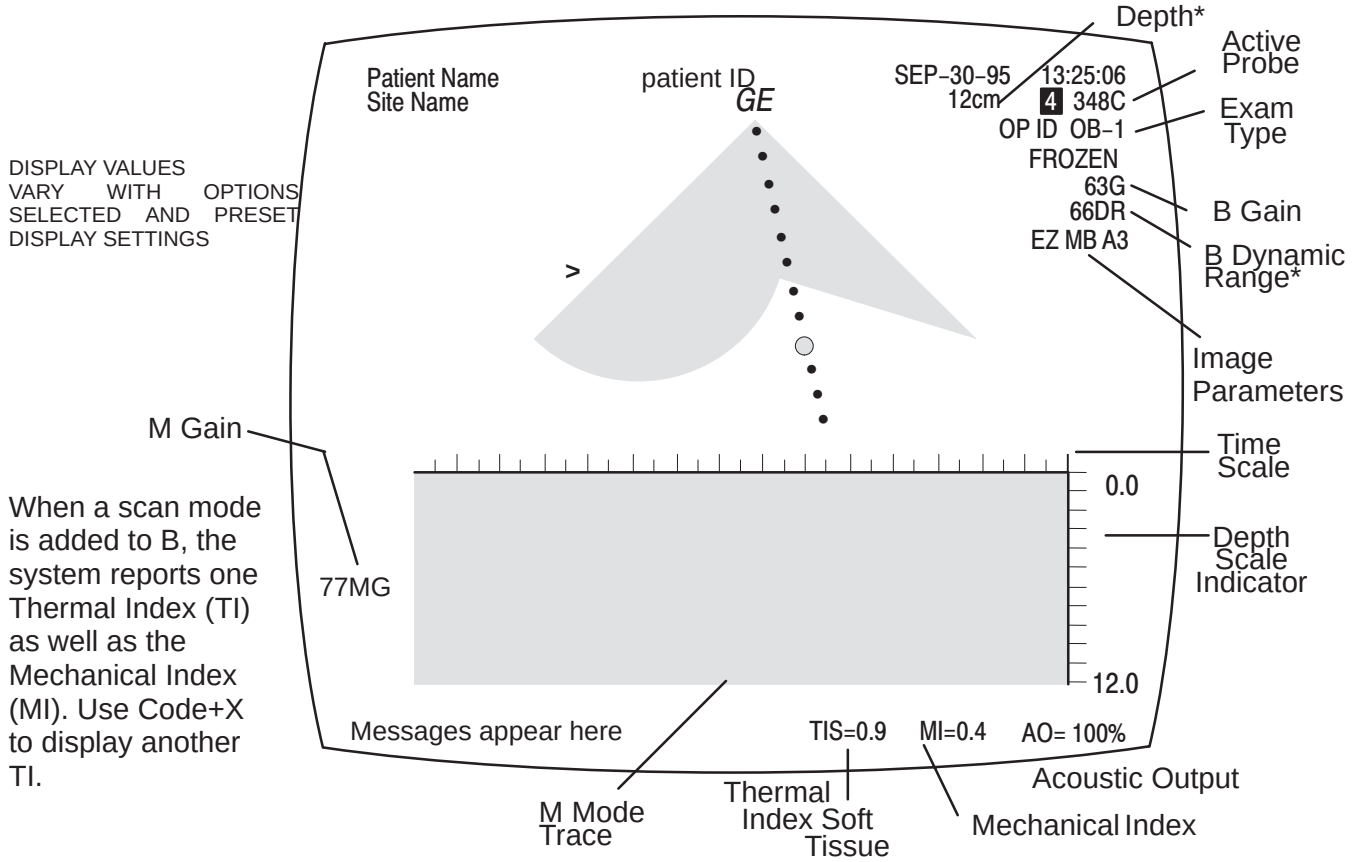

M–MODE DISPLAY SCREEN
ILLUSTRATION 4–6

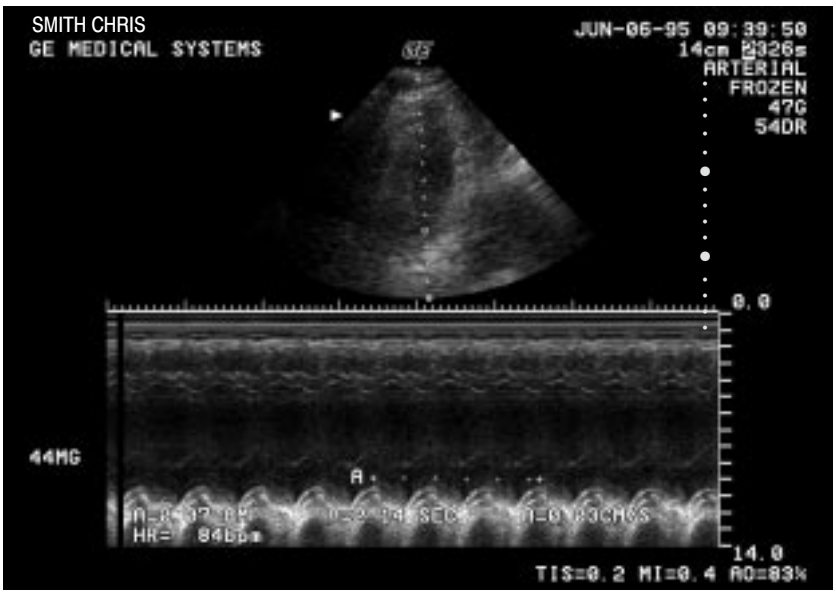

ACTUAL M IMAGE
ILLUSTRATION 4–7

4–3–3 Basic System Checks (Continued)

Step	Check	Expected result
	M–MODE CHECKS	
14	With a single B image displayed, press **Cursor**.	The M mode cursor should appear on B mode image.
	Roll trackball, position cursor over area you want to see in motion.	The M Mode cursor should follow trackball movement and timeline should update for new location of focus.
	Press **M** button.	The M Mode timeline should appear below the B image. Whether it takes half the screen or two–thirds depends on the presets. The TIS acoustic output should appear; could be TIB or TIC if someone has used Code X to change choice of Thermal Index.
15	Rotate **Gain** knob.	The M timeline should get brighter with CW rotation and darker with CCW. **MG** value in M Mode timeline display also changes.
16	Click **Acoustic Output** up/down.	**AO** percentage value in display changes.
17	Click **M DYN RANGE** softkey choice to adjust Dynamic Range of gray M timeline image. Press **Cursor.** Click softkey. Press **Cursor** again.	Number below **M DYN RANGE** in softkey changes in steps. Size of step varies with setting. Range of numbers varies with probe, application and multi frequency setting. Contrast in M timeline trace increases as dynamic range number decreases; contrast decreases as dynamic range number increases. Softkey shifts from **M DYN RANGE** to **B DYN RANGE**. Softkey adjustment affects B Mode image. Softkey shifts from **B DYN RANGE** to **M DYN RANGE**.
18	Press [**Code + A**] to display M Mode Process softkey menu. Click **SWEEP SPEED** softkey up/down. Press **Exit**.	**FAST**, **MEDIUM**, or **SLOW** appears at bottom of softkey. The timeline speed changes to match the softkey selection. **FAST**=2 **MEDIUM**=4 **SLOW**=8
19	Press **Freeze**	Annotation changes; the word "**FROZEN**" appears in the image display.
	Press **Freeze** again	Image under cursor is once again live, "**FROZEN**" disappears from image display.
20	Press **Previous/Next** to display B M Mode softkeys. Click **M EDGE ENHCE** up/down	The number displayed below **M EDGE ENHCE** in the softkey varies from 0 to 7, depending on probe used, application used, and multi–frequency selection. Edges inside the M timeline trace should become lighter as the softkey number increases and darker as the sofkey number decreases.
21	Press the **M** button.	The M Mode timeline trace and Thermal Index should disappear.

4–3–3 Basic System Checks (Continued)

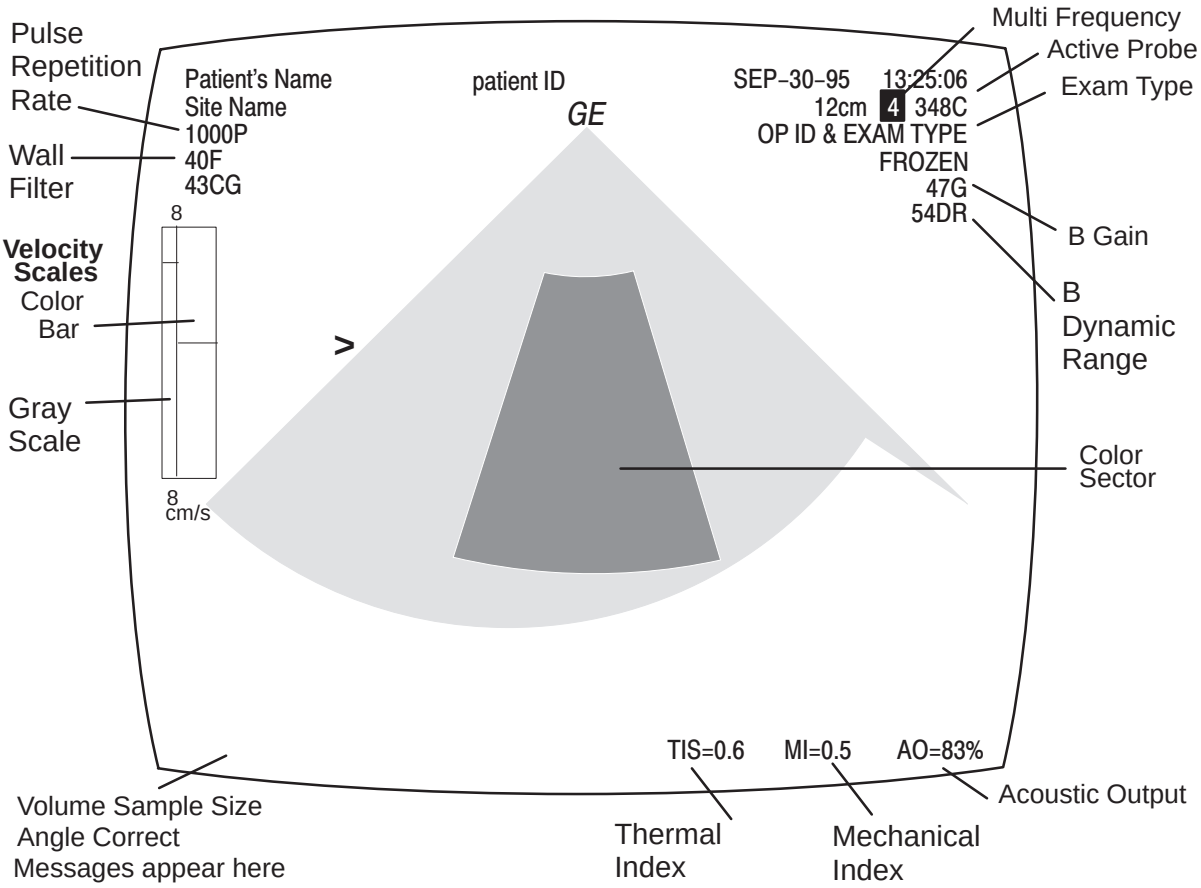

B PLUS COLOR MODE DISPLAY SCREEN
ILLUSTRATION 4–8

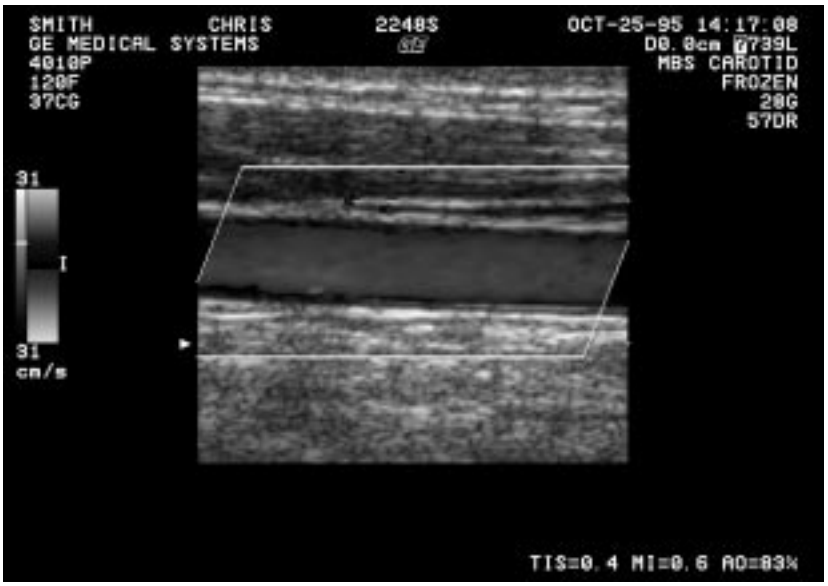

ACTUAL 2D COLOR FLOW IMAGE
ILLUSTRATION 4–9

4–3–3 Basic System Checks (Continued)

Step	Check	Expected result
	COLOR FLOW CONTROLS	
22	Press **CF** button.	Color wedge appears over sector scan or a color rectangle appears over a linear B image. CF softkey menu appears.
23	Rotate **Doppler Gain** knob.	Color wedge gets more colorful with CW rotation of knob and less colorful with CCW rotation. Color Gain value appears in upper left corner of display.
24	Press **Invert.**	Colors reverse on the color bar and in gray scale.
25	Press **Zoom**, roll trackball and use ROI rocker to position and size area of interest, Press **Zoom** again and then press **Freeze**. Press **Zoom** again to exit.	Should be able to Zoom frozen area some more as a pixel replicate magnification rather than an increase in line density as the first Zoom did. LEDs (if present) inTGC pots within ROI light, others go out if previously lighted.
26	Click **WALL FILTER** softkey.	Number value in softkey changes. Wall filter (**F)** value near top left of display changes. Indicator in middle of color bar widens or narrows.
27	Click **CF FR/RES** softkey to another frame rate.	Note changes in color resolution after the system reconfigures for emphasis on Frame Rate or Resolution.
28	Press [**Code + A**]. • Click **COLOR TAG** softkey. • Click **COLOR TAG SIZE** softkey. • Click **COLOR TAG POS** softkey. • Press **Exit** on the keyboard	Use of softkeys affect which colors are emphasized; this range will be illustrated on the color bar. • Tag appears at middle of positive color bar. • Up causes the tag to grow larger, down causes tag to grow smaller. • Up moves the tag upward, down moves tag downward • Default B/CF softkey menu reappears.
29	Press the **PDI** key.	The third softkey called **COLOR MAP** should change to a P–n Map. There will also be T–n Maps available. The T–1 region should be black, not red when scanning air with no gain.
	Press **PDI** again to turn it off.	The **COLOR MAP** choice should revert to V–n or VV–n Map.
30	If the **MR FLOW** is ON with a collaborating probe, you can get more than one focal point in the color area.	All microslice probes can do this and 348c, 548c, 739L and LA39 can with this software option.
31	Press **CF** button.	Color wedge disappears. Default B softkey menu returns.

4–3–3 Basic System Checks (Continued)

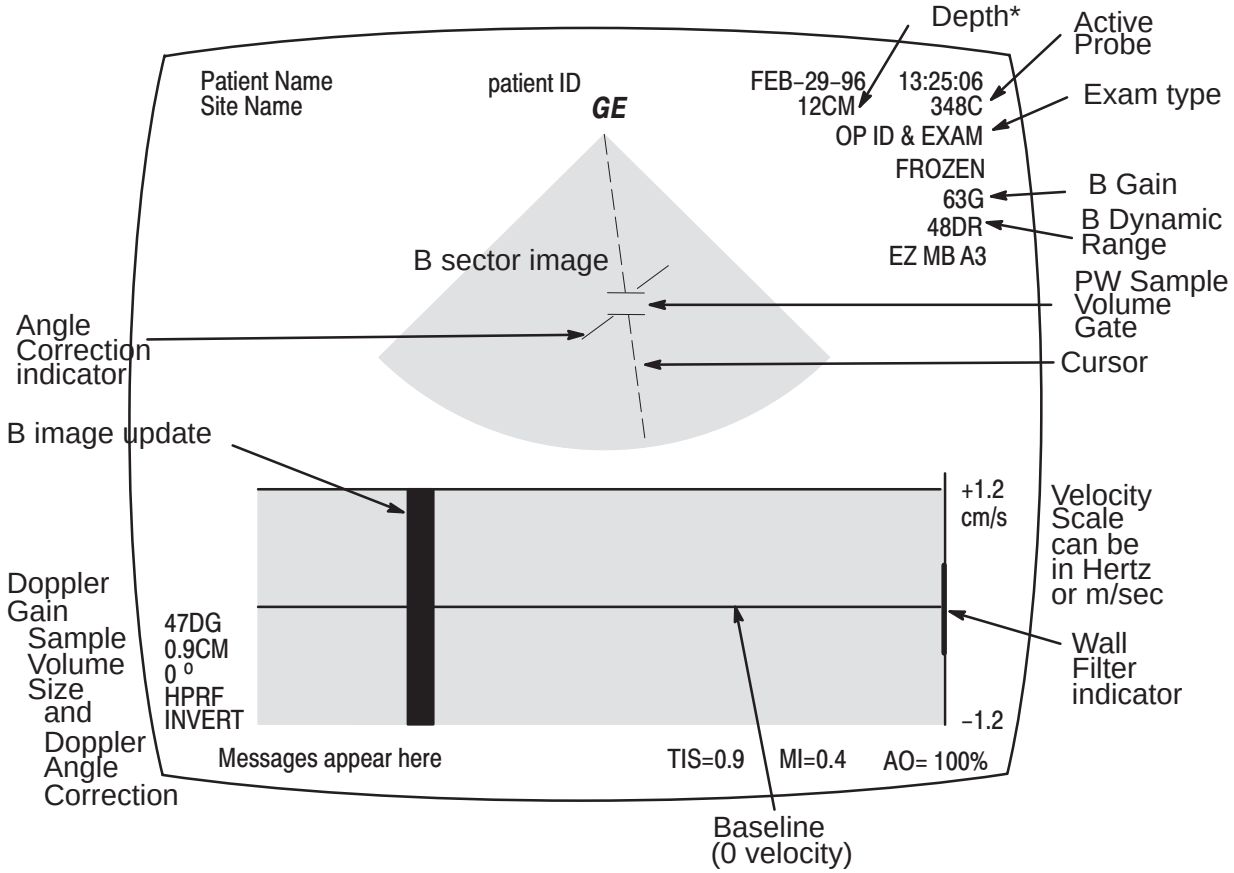

PW DOPPLER DISPLAY SCREEN
ILLUSTRATION 4–10

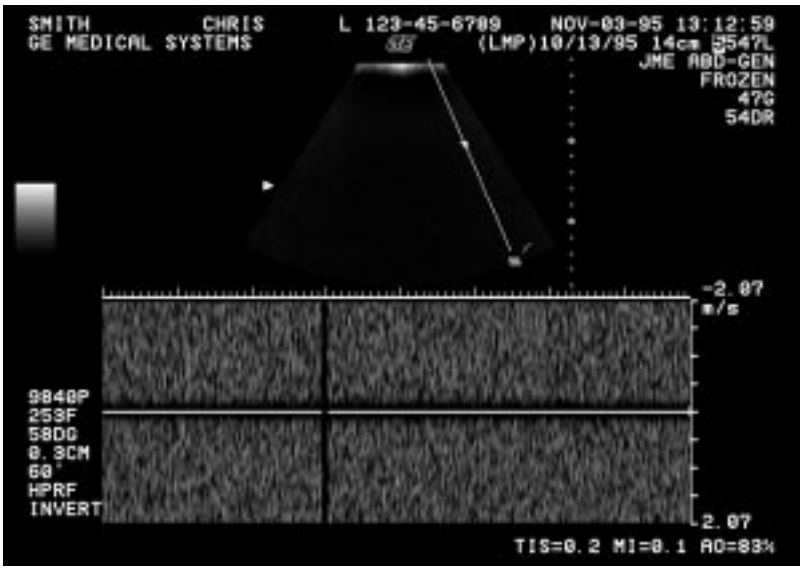

ACTUAL PW IMAGE
ILLUSTRATION 4–11

4–3–3 Basic System Checks (Continued)

Step	Check	Expected result
	PW DOPPLER CHECKS	
32	Press **PW** button.	Doppler timeline appears below B image. Since the Doppler frequency shift is only detected when there is movement, you cannot use a stationary phantom to test it. Instead use a Doppler phantom or the movement of your finger on the gel liberally applied to the probe pallet.
33	Rotate **Volume** knob.	Doppler audio increases with CW turn, decreases with CCW.
34	Rotate **Doppler Gain** knob.	Gray contrast and brightness of the Doppler timeline changes.
35	Press **Cursor** and then click **Velocity Scale** (near the right edge of the control panel) up. Repeat by clicking **Velocity Scale** down.	Scanning pauses as new parameters are loaded, then spectrum resumes at new Pulse Repetition Frequency (PRF). When the velocity scale increases, the timeline waveform decreases proportionally. When the velocity scale decreases, the timeline waveform increases. PRF increases/decreases; HPRF may be noted.
36	Click **WALL FILTER** softkey up/down.	Number near bottom of **WALL FILTER** softkey changes. Number may be cm/s or KHz depending upon preset and whether angle correct is on/off. Wall filter value adjacent to timeline display tracks number changes in softkey.
37	Click **DOPPLER DYN RANGE** softkey	Number below **DOPPLER DYN RANGE** in softkey changes. Size of step is 4dB; number range varies with probe and application. Spectral display has more contrast as the **DOPPLER DYN RANGE** value is decreased.
38	Press **[Code + U]**. Click **UPDATE FORM** softkey. Click **UPDATE RATE** softkey.	Update SoftMenu appears. TIME or NUM/SEEP appears at bottom of softkey to indicate whether update interval is determined by time or number of sweeps. Number at bottom of softkey changes to indicate whether update interval is 1, 2, 5, 10, or 20 seconds or 1 or 2 sweeps.
	Press **Exit**.	Returns to default Doppler softkey choices.
39	Click **SV Gate** up & down	Sample Volume Size should increase and decrease
40	Click **Angle Correct** L & R	The sampling angle should rotate CCW and CW
41	Click **Angle Steer**	If the image is a sector and not zoomed, or a linear and the Set Beam Angle preset is off, the angle indicator moves and the angle number changes on the screen.
42	Press **Freeze** then **Calc**.	Calc choices appear on softkeys.
	Press **Freeze**.	Returns to default Doppler softkey choices.

4–3–3 Basic System Checks (Continued)

Step	Check	Expected result
43	Press **PW** button.	Doppler softkey menu and timeline image disappear. Default B softkey menu returns.
44	Press **CF** button then **PW** button.	System enters Triplex mode; the doppler spectrum displays along with the Color Flow and B Mode image. The cursor changes to a Doppler cursor.
45	Press **CF** button then **PW** button.	System exits Triplex mode.
MEASUREMENT AND MULTI–IMAGE CHECKS		
46	Press **Caliper** with cursor over a B image.	Depth is displayed with one caliper on trace.
	Press **Caliper** again.	Distance is displayed with two calipers.
	Press **Ellipse.**	Can adjust size. System reports circumference, major and minor diameters, and area (if preset).
	Press **Set.**	Ellipse is fixed and area, circumference and major and minor diameters are reported.
47	Press **Caliper** with cursor over an M image.	Depth is displayed with one caliper on trace.
	Press **Caliper** again. **Set**	Distance, time, and slope are reported with two calipers.
48	Press **Caliper** with cursor over a Doppler timeline.	Velocity is displayed with one caliper.
	Press **Set.**	Caliper graphic changes to a fixed cursor. Trackball control returns to the scan mode cursor.
49	Trace an area on the image. Freeze, **Trace**, TB to position **Trace**, TB, Backspace, **Set**.	First trace tells system what and where trace is desired. Second Trace tells system to start tracing. Backspace erases trace dots. Tracing to the start point or pressing **Set** completes the enclosure.
50	Press **Calc**. Click one of the softkey Calcs to unfreeze image.	System prompts you through the measurement and places result on Worksheet (if applicable) If preset to display, its reference location should appear in the lower right corner.
51	1. Press **PW** button.	Both the B and timeline image appear.
	2. Type **[Code+U]** and set Time to 1 second. Press **Exit**.	Update softkey menus appear.
	3. Press **Update**	B image updates every second.
	4. Press **PW** button.	The timeline image goes away.
	5. Press **Multi Image**	Two B images appear; the one on the left is frozen.
	6. Press **Image Select**.	The image on the left is alive; the image on the right is frozen.

4–4 SITE LOG

Date	Service person	Problem	Comments

Date	Service person	Problem	Comments

Date	Service person	Problem	Comments

SECTION 5 – SYSTEM OVERVIEW

TABLE OF CONTENTS

SECTION	TITLE	PAGE
5–1	PURPOSE OF SECTION	5–2
5–2	LOGIQ™ 700 DESCRIPTION	5–2
5–2–1	Major Components	5–2
5–2–2	Ultrasound Data Path	5–3
5–2–3	Functional Subsystems	5–4
5–3	ACOUSTIC OUTPUT	5–6
5–3–1	Acoustic Output (AO) Definition	5–6
5–3–2	AO Factors	5–6
5–3–3	Mechanical Index (MI)	5–6
5–3–4	Thermal Index (TI)	5–6
5–4	LOGIQ™ 700 CIRCUIT CARDS	5–9
5–4–1	Front End (FE) Cards	5–9
5–4–2	Back End (BE) Cards	5–13
5–4–3	Control Panel Cards	5–17
5–5	POWER SYSTEM	5–19
5–5–1	AC Input Power	5–19
5–5–2	On/Off Control	5–19
5–5–3	AC Power Outlets	5–19
5–5–4	DC Power	5–20
5–5–5	Digital DC Power Supply (PS1)	5–21
5–5–6	Low Noise/High Voltage (LN/HV) Power Supply (PS2)	5–24
5–5–7	Power Destination Points	5–28

5–1 PURPOSE OF SECTION

This section explains LOGIQ™ 700 system concepts, component arrangement, and subsystem functions. It also describes the Power Distribution System (PDS) and probes. Look at the Renewal Parts in Section 9 for more details about the appearance and location of the system components.

5–2 LOGIQ™ 700 DESCRIPTION

5–2–1 Major Components

The LOGIQ™ 700 covered in this manual has one card cage, a monitor, a hard drive, a magneto optical drive (MOD), and an XDIF assembly that is used to mount the probes. (See Illustration 5–1.) The circuit boards housed in the card cage plus the operator control panel form four functional subsystems: the Kernel, Beamformer, Mid Processor, and Scan Converter.

In addition to the components shown, the unit has a fan assembly to circulate air for cooling and two power supplies, a transformer, circuit breakers, and an outlet strip that make up a power generation/distribution subsystem. These components are housed in the lower rear of the unit.

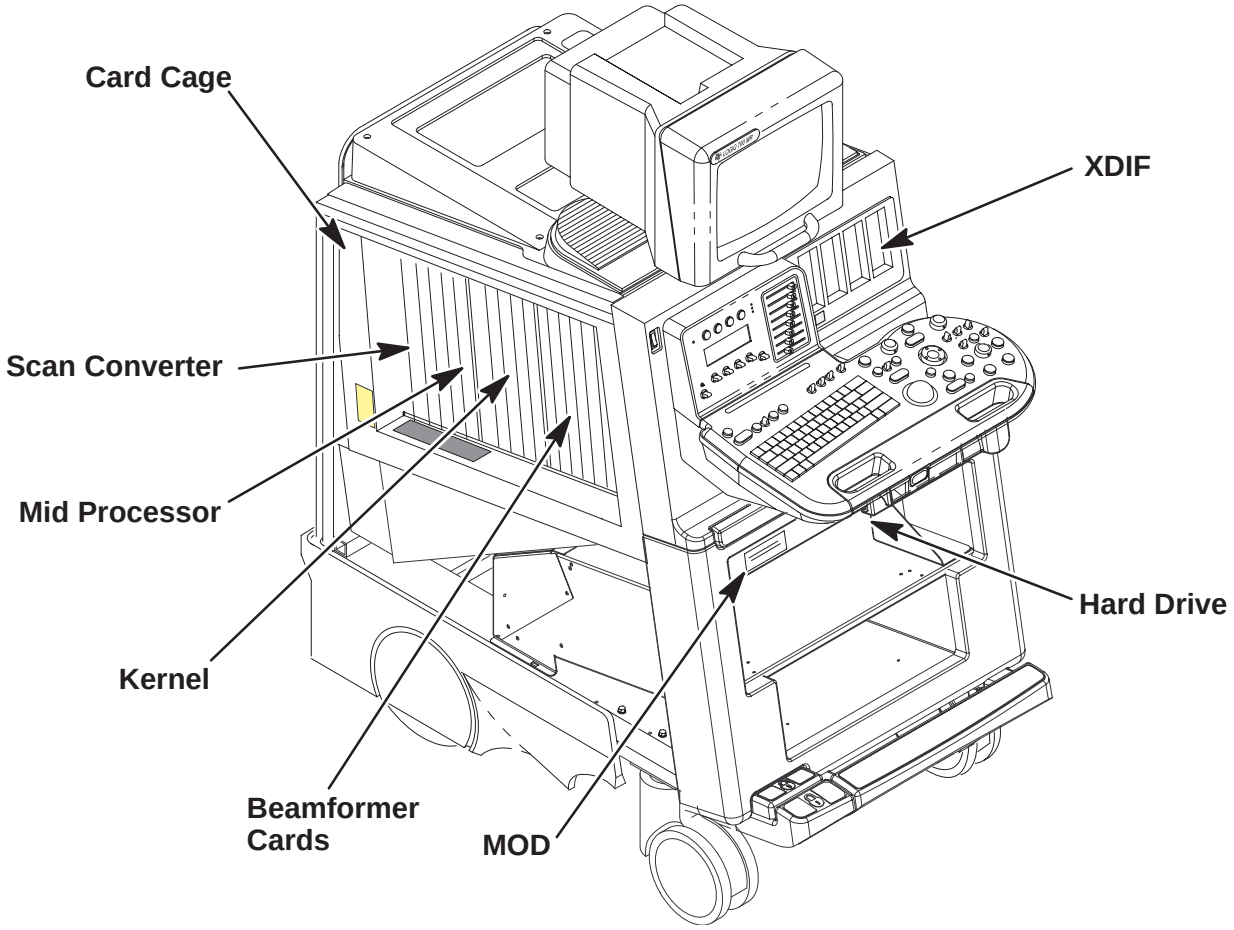

LOCATION OF MAJOR COMPONENTS WITHIN LOGIQ™ 700
ILLUSTRATION 5–1

5–2–2 Ultrasound Data Path

The ultrasound data path begins with the operator's request translated to commands and scan sequences (vector parameters) delivered at the right moment to the appropriate circuit boards. Strong radio frequency (RF) beams are transmitted and weak ones are received between the beamformer, probe and patient. The Scan Sequencer board (SS) of the **Kernel** is the interface between the Front End cards and Back End. The SS forwards the CPU and scan controls to the **Beamformer** which returns the digital baseband I and Q ultrasound data to the SS. The SS then delivers this data to all three boards of the **Mid Processor**. Here they are processed according to their scan acquisition mode. The data is accumulated, synced and output to the **Scan Converter** which prepares the vector data for video display to the monitor, printers, recorders, and camera. The audio signals are processed in the Kernel by the MC board. All control of the system is managed by the Motorola MVME2700 card on the MC board.

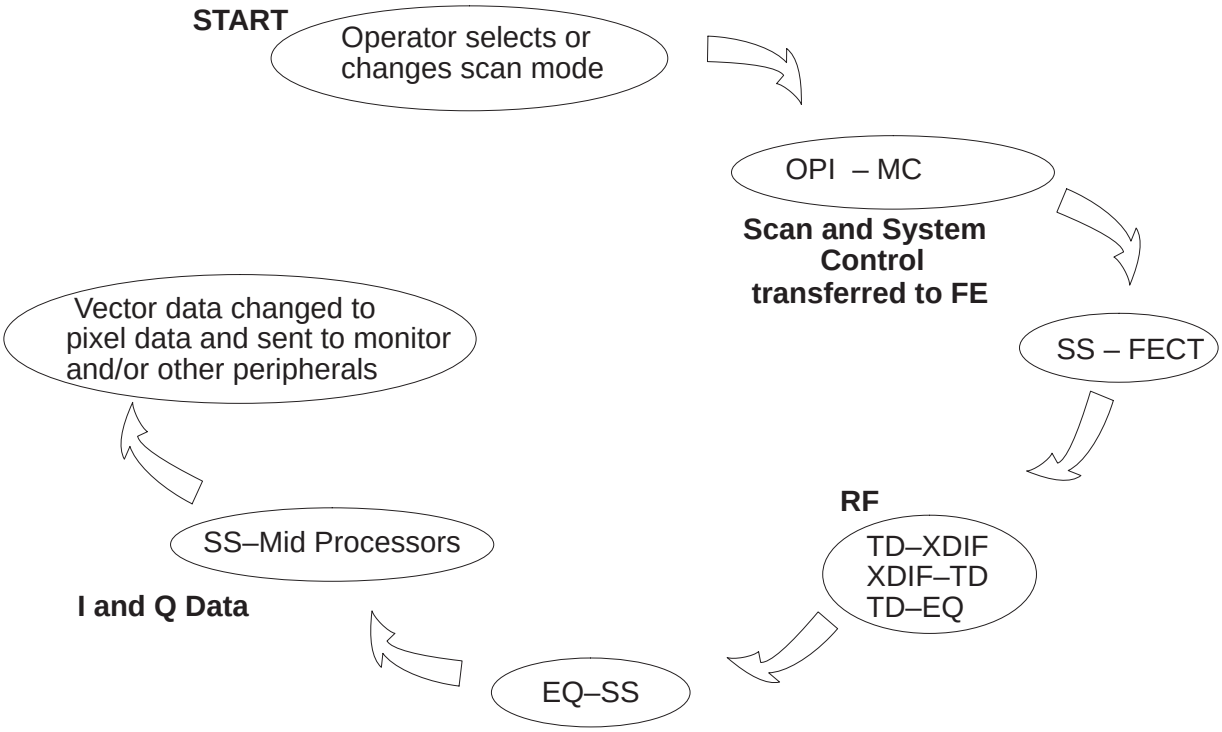

SYSTEM DATA PATH
ILLUSTRATION 5–2

5–2–3 Functional Subsystems

The unit consists of four functional subsystems: The Kernel, the Beamformer, the Mid Processor, and the Scan Converter. The basic interfaces of the four functional subsystems are shown in Illustration 5–3 and described in Table 5–1.

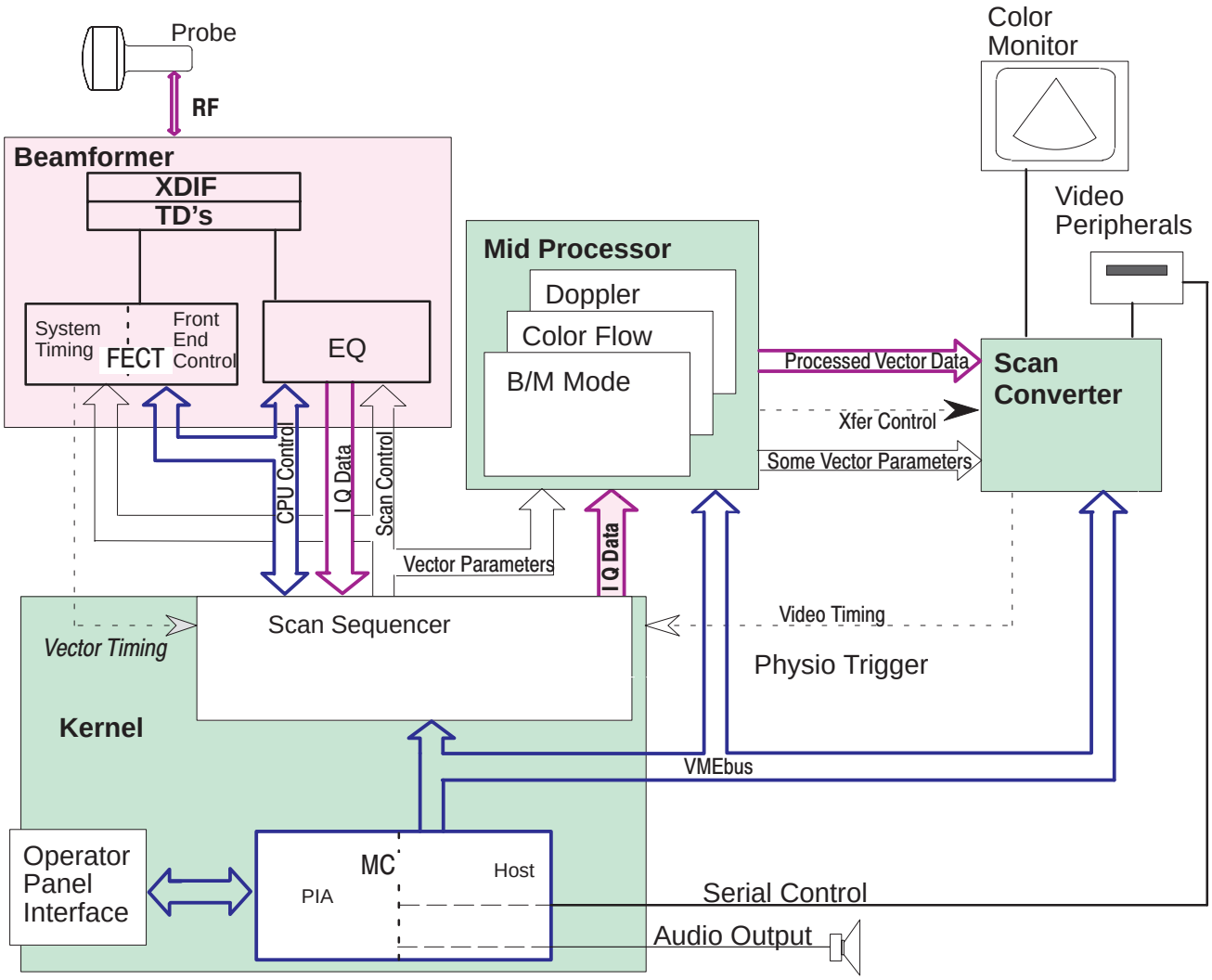

BASIC SYSTEM BLOCK DIAGRAM
ILLUSTRATION 5–3

TABLE 5–1
SUBSYSTEM SUMMARY

Subsystem	Description
Kernel	• Controls all HW components delivering coefficients and control signals via the VMEbus, software, and SW memory maps • Delivers scan control data at the vector rate needed to form the requested beams, process their echoes, and convert the scan to an image • Interfaces the outside world to the unit, and the Front End to the Back End • Runs diagnostics; can simulate I and Q data
Beamformer	• Generates and transmits 2.5 to 13.75 MHz sound waves through a probe • Steers, amplifies and focuses the transmit beam • Receives and amplifies the echoes from the patient • Digitizes and filters the received data • Generates all system control clocks
Mid Processor	• For the gray 2D and Motion images (B and M modes), it converts the I & Q data to grayscale and adds any user selected B or M processing • For the color overlay, it calculates blood velocity, variance and power for all volumes within the user selected region, then outputs B color data to CALM • For the Doppler image and sound, it computes the power of the frequency shift caused by flowing blood and converts it to pixel and audio signals
Scan Converter	• Transforms processed ultrasound data from polar coordinates (Rθ) to digital pixel (X,Y) values, then to analog video in several forms: RGB, Super Video, Composite, Black & White • Enables multiple image display and annotation • Handles peripheral data inputs • Stores and buffers images on CINE board

5–3 ACOUSTIC OUTPUT

CAUTION

POTENTIAL TISSUE DAMAGE
Although the system limits maximum acoustic power magnitude, the operator must be careful with the duration. The AO percentage is a relative indicator of potential bioeffect. When examining sensitive tissue or when the percentage approaches 100, the user should attempt to minimize exposure time. Refer to Appendix A in the Operator Manual for additional information concerning potential bioeffects and means for minimizing exposure.

5–3–1 Acoustic Output (AO) Definition

The monitor displays an AO percentage which is related to the potential for producing mechanical or thermal bioeffects (cavitation or heating) in the patient. The percentage is of maximum output possible. The purpose of the Acoustic Output display is to keep the operator aware at all times of the energy being generated. As the operator changes settings that affect acoustic output, the potential for bioeffect is reflected in the percentage that is computed and displayed in real time. An increase in the displayed percentage means an increased potential for bioeffect.

5–3–2 AO Factors

The power of the transmitted ultrasound beam depends on the AO level (1–5), probe, depth, frequency, and scan mode. Software calculates values for pulse amplitude, number of cycles per transmission, and pulse repetition interval (PRI) based on these variables. The default level and hardcopy OFF can be preset.

5–3–3 Mechanical Index (MI)

MI is represented on the display and is related to cavitational bioeffects. As acoustic waves pass through tissue, they cause it to expand and contract. This expansion may cause gas bubbles to form. This effect is called cavitation; it is not known whether this is a health risk.

5–3–4 Thermal Index (TI)

TI is added to the display when another scan mode is added to the B image. TI indicates the potential for heat generation within tissue. Tissue heating is more of a concern when the acoustic beam is stationary, so the TI is likely to increase when Doppler or M modes are selected. Three different TIs may be used depending on the type of tissue being examined:

- **Soft Tissue Thermal Index (TIS)** indicates the potential to generate heat within soft tissues.
- **Bone Thermal Index (TIB)** indicates the potential to generate heat at the beam focus when focusing on or near bone that is adjacent to very sensitive tissue. This index is intended as a thermal indicator for second and third trimester fetal examination or transfontanelle neonatal cephalic exams.
- **Cranial Bone Thermal Index (TIC)** indicates the potential to generate heat in the near–field when the beam passes through bone at the surface as with adult or pediatric cranial applications.

5–3 ACOUSTIC OUTPUT (Continued)

TABLE 5–2
ACOUSTIC POWER INDICATIONS ON IMAGE

WHEN scanning ...	THEN the screen reports the ...	
Just B image	Mechanical Index **(MI)**	automatically
M, Doppler, CF	Soft Tissue Thermal **(TIS)** Index	selectable by Code X
Fetal Bone	Bone Thermal Index **(TIB)**	selectable by Code X
Adult Cranial Bone Doppler	Cranial Bone Thermal Index **(TIC)**	selectable by Code X

TABLE 5–3
MODE AFFECTED BY AO CHANGE

WHEN the scan mode is...	THEN a power change affects the...
Only B	B image
B plus M	M mode
B (plus M) plus Color Flow	Color Flow mode
B plus Doppler	Doppler mode
B w Color and Doppler	Doppler mode

TABLE 5–4
EFFECTS OF PANEL CONTROLS ON ACOUSTIC POWER

Front Panel Control	Effect	Comments
Acoustic Power	▲ ▲	System limits max value
Sector size (rocker switch in simple B mode)	▼ ▲	Smaller sectors may increase frame rate
Depth	▲ ▼	Acoustic power is greatest when scan focus equals a probe's natural focus
acoustic ***Zoom*** magnification	▲ ▲	Live zooming may increase acoustic frame rate
Focus Position (paddle switch above +)		The closer the scan focus is to the probe's natural focus, the higher the power will be
Focus Number (paddle switch above +)	▼ ▲	Changing the number of zones may cause system to change frame rate and focal position
M MODE and **COLOR FLOW**		Adding modes may cause power to be added
PW or **CW** DOPPLER		Acoustic Power paddle switch controls Doppler power when Doppler is ON. Adding Doppler exposes the patient to more acoustic power than just B mode imaging

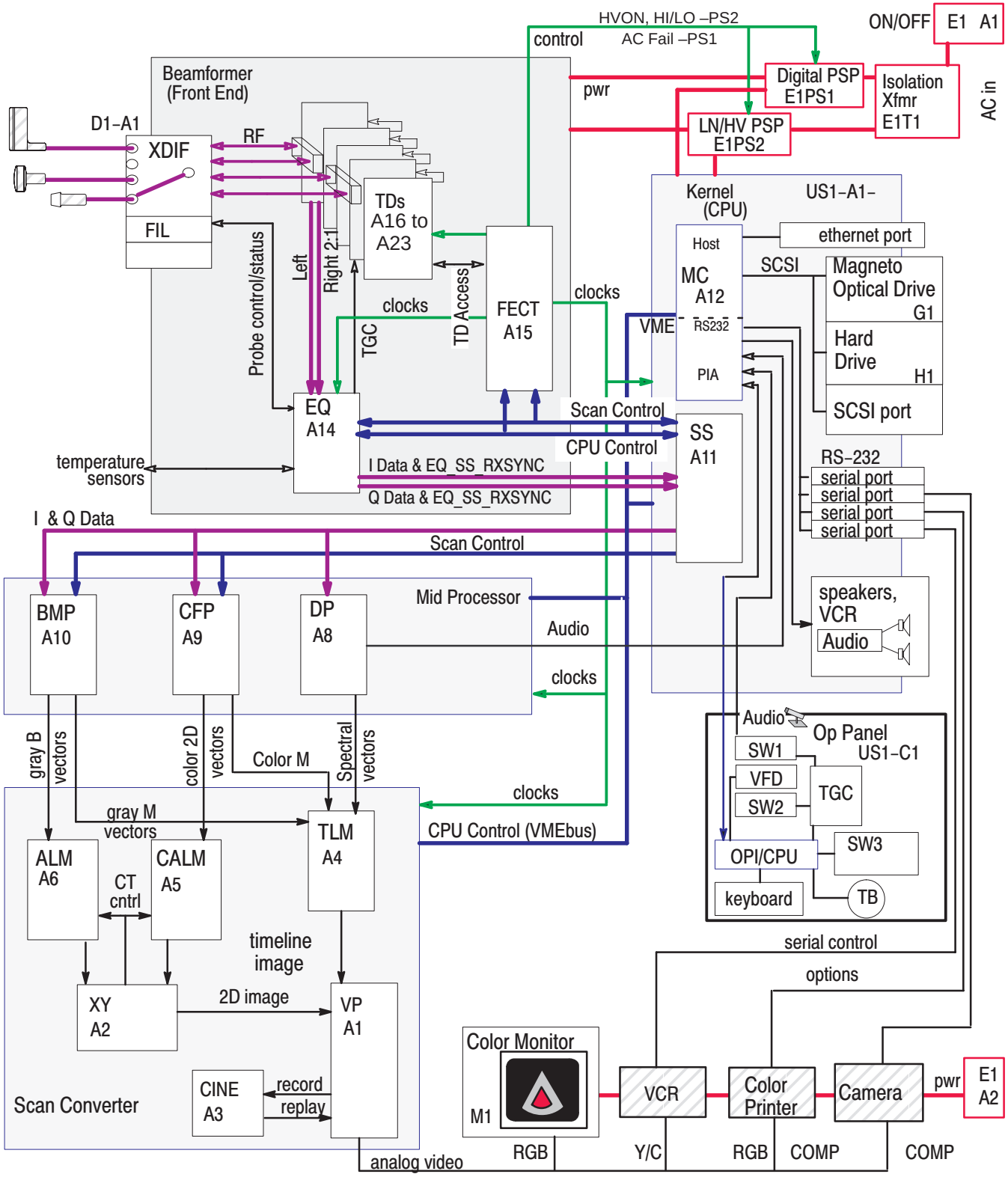

DETAILED SYSTEM BLOCK DIAGRAM
ILLUSTRATION 5–4

5–4 LOGIQ™ 700 CIRCUIT CARDS

WARNING **These boards contain CMOS. Being in circuit does not protect them. Wear a tested ESD strap whenever your hand comes near the parts that contain electronic components. Remove power if you will be disconnecting parts.**

CAUTION **Practice good ESD prevention when you disconnect or attach items to the bulkhead. A ground strap around your wrist, clipped to the ground stud on the back, should prevent large electrical potential discharges into the backplane which could damage circuit boards and therefore system performance. An alternate method would be to touch the frame behind the air filter before and while making video, audio, SCSI, ethernet, and serial connections.**

CAUTION **Never remove the RF shielding that covers the analog portion of each TD board.**

CAUTION **Replace all covers and screws before the machine is returned to use. This assures system EMC, cooling and image quality.**

5–4–1 Front End (FE) Cards

The portion of the system called the FE is basically the beamformer subsystem. The beamformer creates and transmits sonographic waves and then receives the echoes. Most of the circuit boards that comprise the beamformer subsystem are housed in the card cage. These circuit cards use multi–layer boards that are 340 mm high and 400 mm deep and are accessed from the left side of the unit as you face it. See Illustration 5–5 and Table 5–5 for more details about individual card cards.

The backplane (BP) is accessed from the right side of unit as you face it. The remainder of the FE consists of the Transducer Interface Board (XDIF) and probes which are mounted on the front of the unit. See Table 5–6 for more details about these individual card cards.

5–4–1 Front End (FE) Card (Continued)

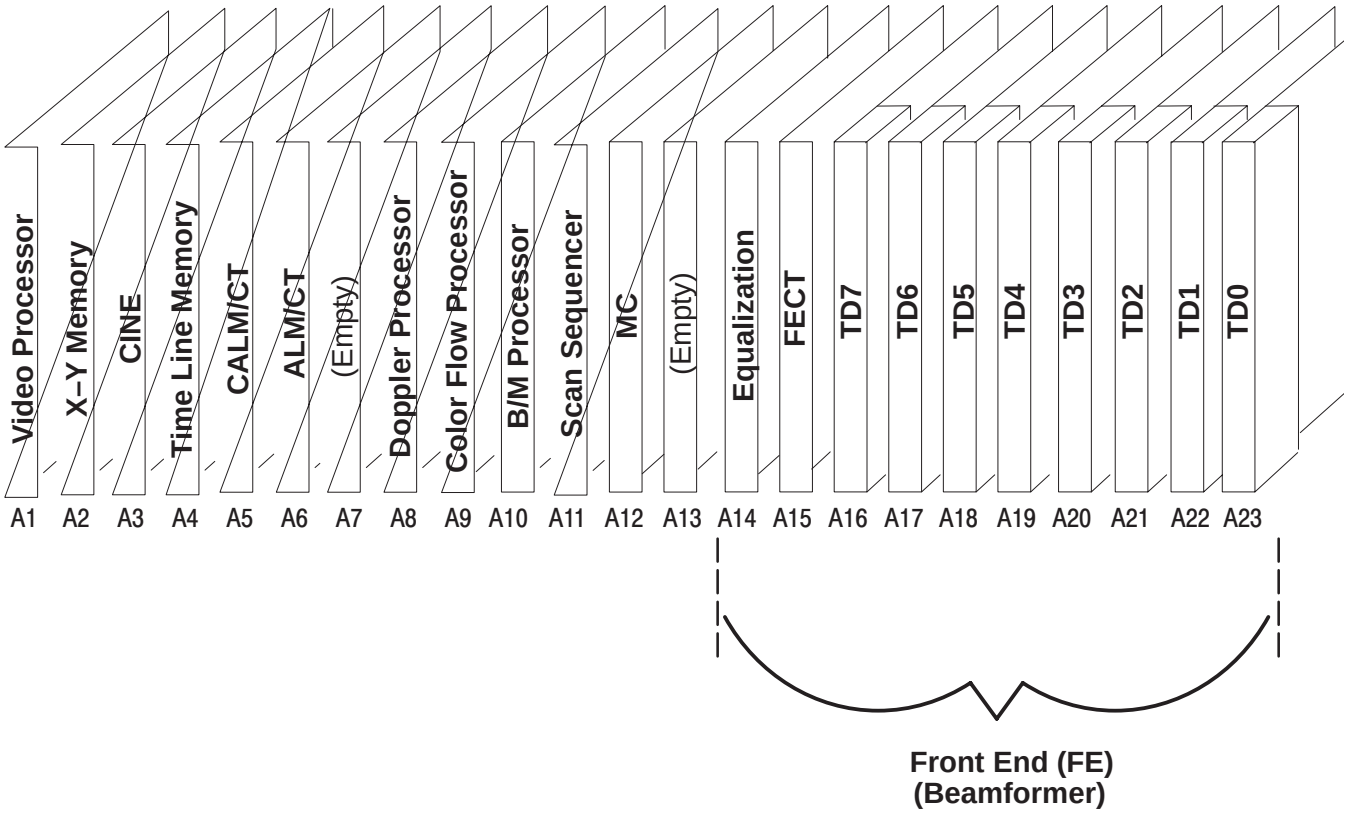

FRONT END CIRCUIT CARDS IN CARD CAGE
ILLUSTRATION 5–5

5–4–1 Front End (FE) Cards (Continued)

TABLE 5–5
FUNCTIONS OF FE CIRCUIT BOARDS IN CARD CAGE

Acro-nym	Full Card Name	Card Function
FECT	Front End Control and Timing Board	• With the MC and SS in the kernel, transfers CPU control signals and scan control vector parameters to the FE cards • Generates TD addresses • Distributes system clocks to the Back End • Stores data for/from the TDs • Generates and distributes system clocks and sync pulses needed for beamforming, vector processing, and power
TD	Time Delay Board	• Generates and amplifies the excitation waveform for each channel • Receives, preamplifies and digitizes the RF signals from the active probe • Applies the pulser current and analog Time Gain Compensation that the EQ determines • Applies complex filter to digitized RF signal • Provides dynamic apodization and dynamic receive delays • Automatically adapts receive beams for speed or resolution depending on scan • Sums detected echo channel to channel, then board to board (boards must be contiguous). The last TD forwards total output to the EQ.
EQ	Equalization Board	• Compensates for the attenuation of the transmitted signal in tissue by depth; performs TGC based on focal zones • Compensates for frequency shift (TFC) in tissue, needed in B and M modes • Filters out harmonics and optimizes signal to noise ratio • Delivers amplified and corrected I&Q data to the SS in the Back End • Detects and activates lifted probe • Controls transducer commutator (multiplexer) when probe elements exceed TD channels • Monitors unit and active probe temperature, FE voltages, and FE configuration using four IIC serial buses connected to the MC via the FECT • Turns off PHVP on PS2 (LN/HV) if a TD pulls too much power or is not functioning properly

5–4–1 Front End (FE) Cards (Continued)

TABLE 5–6
FUNCTIONS OF OTHER FE CIRCUIT CARDS

Acro-nym	Full Card Name	Card Location	Card Function
BP	Backplane	Rear of card cage	• Distributes power and all signals except for RF signals.
HV Cap	HV Capacitor/Filter Assembly 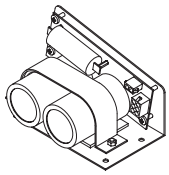	Mounted on the lower portion of the rear wall of unit (discontinued on units built after Dec 99)	• Provides additional filtering on the PHVP signal, the programmable power available to the TD pulsers.
XDIF	Transducer Interface Board	D1–A1	• Switches, connects, grounds, buffers, and isolates signals between the probes and the EQ (control) or the TD's (RF)
	Transducer (Probe)	XD01 XD02 XD03 XD04	• Every probe has a circuit board with an EEPROM that was programmed at the factory with model information

5–4–2 Back End (BE) Cards

The BE includes three subsystems: Scan Converter, Mid Processor, and Kernel. The circuit cards that make up these subsystems are housed in the same card cage as the FE boards.

The BE circuit cards also use multi–layer circuit boards. These circuit boards are about 340 mm square in size. The BE circuit cards, including the MC and its on–board Single–Board Computer that controls all data transfers, are accessed from the left side of the unit as you face the front.

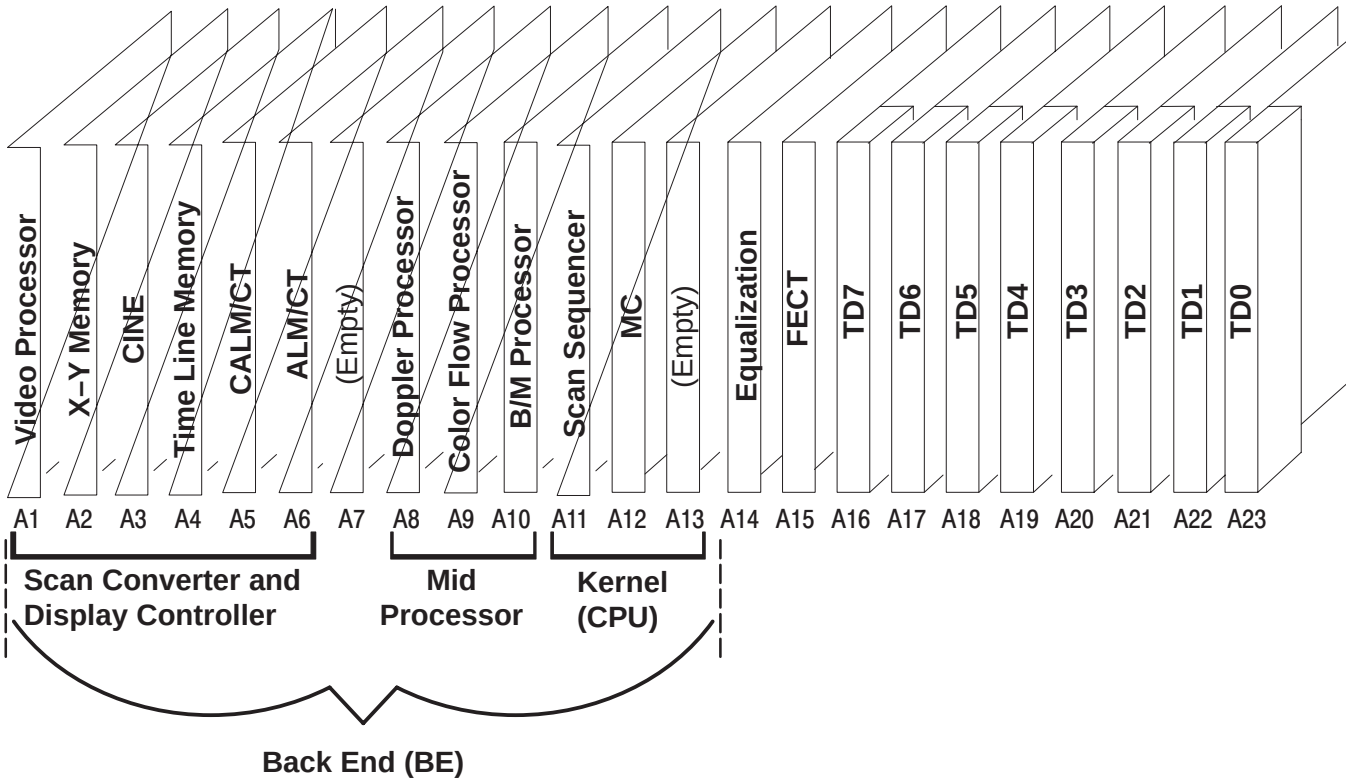

BE CIRCUIT CARDS AND SUBSYSTEMS
ILLUSTRATION 5–6

5–4–2 Back End (BE) Cards (Continued)

TABLE 5–7
FUNCTIONS OF KERNEL CIRCUIT CARDS

Acro-nym	Full Card Name	Card Function
BP	Backplane	• Provides the VMEbus, all BE, SCSI and control panel power and all BE signals to the BE boards. Distributes power and all signals except for RF signals and oscillator clocks
MC	Master Controller Board	**Master Controller (Host) functions** • Contains EPROMs that test and boot the system when power is applied • Controls all circuit boards, using a VMEbus standard • Provides SCSI, serial, and ethernet I/O • Queries all boards for the data stored on them; sends appropriate action commands • The Master Controller (Host) is the only master processor; the other boards and DSPs act as slaves **Peripheral Input/Output and Audio (PIA) functions** • Interfaces the control panel with the host • Creates/filters analog doppler audio, driver audio, power amplifier, speaker, and VCR audio
SS	Scan Sequencer	• Controls acoustic vector firing, its configuration and timely delivery to the FE and MP • **Sends** CPU control and Scan control (vector parameters) signals to the Front End, **Receives** equalized echo data and FE interrupts, forwards the received and processed echoes to the Mid Processor boards in the BE with the instructions on how to process them (vector parameters again) • Can sync the ultrasound data to the video rate, a physio trigger, or a operator update request • Can simulate I & Q (echo) data for diagnostics

5–4–2 Back End (BE) Cards (Continued)

TABLE 5–8
FUNCTIONS OF MID PROCESSOR CIRCUIT CARDS

Acro-nym	Full Card Name	Card Function
BMP	B / M Processor	• Processes the I & Q data for gray B and M imaging • Its Synthetic Aperture improves averages vectors • Calculates the echo signal's amplitude • Converts the sample rate to a display rate • Implements Dynamic Range and Edge Enhancement • Splices multiple focal zones into one image • Sends processed B data to the ALM • Sends peak signal M data to the TLM • Performs acoustic frame averaging
CFP	Color Flow Processor	• Calculates blood flow velocity, variance, and power from the I & Q data • Transfers 2D color vectors to the CALM • Color M • Can enable Power Doppler Imaging
DP	Doppler Processor	• Extracts and processes the phase shift information from the I & Q data • Generates spectral vector data for the TLM board and Doppler audio for the MC board in real time

5–4–2 Back End (BE) Cards (Continued)

TABLE 5–9
FUNCTIONS OF SCAN CONVERTER CIRCUIT CARDS

Acro-nym	Full Card Name	Card Function
ALM/CT	Acoustic Line Memory / Coordinate Transform	• Receives/holds 2D acoustic vector data from the BMP • Converts live gray B mode data from R–θ format to X–Y • Implements Dual Imaging, acoustic Zoom, Spatial Compounding, Rotate, Invert Image
CALM/CT	Color Acoustic Line Memory / Coordinate Transform	• Receives/holds 2D acoustic vector data from the CFP • Converts live color 2D vector data from R–θ to X–Y format
CINE	Cine Memory	• Enables the capture and replay of recent sonographic images by storing X–Y or RGB data • On replay, injects the stored images at different points depending on data type. • Uses resources on the MC, VP, and TLM
TLM	Time Line Memory	• Scan converts timeline (M, color M, and PW Doppler) data • Manages updates, interrupts, black bar, sweep speed, timeline freeze & replay • Provides alphanumeric and graphic objects to monitor
VP	Video Processor	• Manages gray and color maps, baseline shift, velocity scale, blanking, single, dual, and quad image windows • Generates all the video timing signals • Receives image data (12–bit color and 8–bit gray scale) from the TLM, XY, and CINE and converts it to RGB format using LUT's • Receives Graphics, Doppler, and Physio overlay data from the TLM and converts it to RGB pixel values, and if low contrast to image, inverts it too • Generates digital RGB values from VHS or S–VHS video • Supports multiple video interfaces • Has IIC controller for BE power supply monitoring levels calculation
XY	X–Y Memory	• Controls scan conversion at the pipeline rate • Can control SS phasing with a video frame trigger • Processes raster (X–Y) format data into image frames • Does Frame Averaging, nonacoustic Zoom, B Compounding, Dual Images, Peak Capture, and Smoothing • Outputs video data at the pixel clock rate

5–4–3 Control Panel Cards

There are six circuit cards in the Control Panel. These circuit cards are used to mount the keyboard, control switches, and rotary encoders and to interconnect these devices plus the microphone and trackball to the kernel subsystem. The circuit cards and their components thus act as the command interface between the operator and the rest of the system. Lights within switches as well as a VFD (softkey) display provide feedback from the kernel to the operator.

Locations of the circuit cards within the control panel are shown in Illustration 5–7. The full names and functions of the circuit cards are listed in Table 5–10.

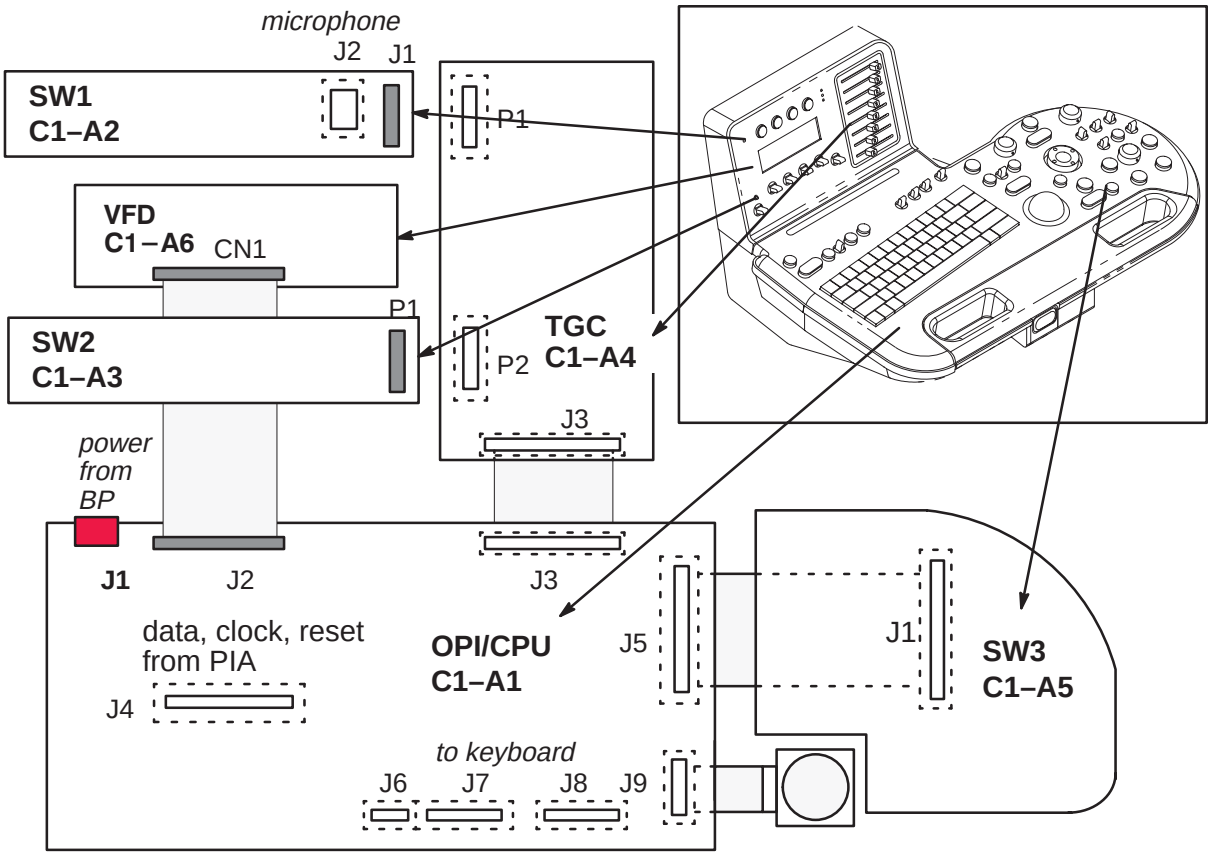

CIRCUIT CARDS AND INTERCONNECTIONS WITHIN OPERATOR CONTROL PANEL
ILLUSTRATION 5–7

5–4–3 Control Panel Cards (Continued)

TABLE 5–10
FUNCTIONS OF CIRCUIT CARDS IN OPERATOR CONTROL PANEL

Acro-nym	Full Card Name	Card Function
OPI/ CPU	Operator Interface Central Processing Unit	• Monitors and transfers status and commands for all OPI circuit boards and devices for the MC • Has a microcontroller that can run OP self test • Distributes switch scan control to the other OPI boards • Drives the panel lights • Has five pushbuttons and five paddle switches
SW1	Switch 1	• Contains four backlit pushbutton switches and a microphone
SW2	Switch 2	• Contains six paddle switches and an LED
TGC	Time Gain Compensa-tion	• Delivers slide pot voltages to the OPI/CPU • Provides feedthroughs for the SW1 and SW2 signals to the OPI/CPU
SW3	Switch 3	• Contains 15 backlit pushbuttons, six paddle switches, an ON/OFF pushbutton for the mic, five rotary encoders, and one ROI rocker switch
VFD	Vacuum Florescent Display	• Provides the circuitry needed to display 256 aqua pixels across and 64 down that label the currently available softkey choices

5–5 SYSTEM POWER

5–5–1 AC Input Power

All power used by the LOGIQ™ 700 is generated from a single ac power input supplied through the unit's power cord. This power input, depending upon the system configuration and the site, may have a nominal voltage of 100, 120, 220, or 240 Vac.

The AC power is routed through the main circuit breaker (CB1), a Metal Oxide Varistor (MOV), a line filter (FL1) and solid state relay(s) to an isolation transformer (T1). Different primary and secondary tap connections on transformer T1 are used to compensate for the power source voltage. The Main circuit breaker, CB1, and the power cord connector are also selected to match the power source.

5–5–2 On/Off Control

Power on/off control is achieved through the use of the On/Off(standby) switch on the front cover and two solid state relays that apply/interrupt the flow of ac input power to the isolation transformer. A small rectifier circuit on the SSR board with a breakdown diode to limit the voltage produces a DC signal for the on/off circuit. Closing the On/Off(standby) switch on these units, routes the DC signal from the SSR board to the coil of the solid state relay. The solid state relay then energizes and the relay contacts close to route the ac input power to the isolation transformer. Opening the On/Off(standby) switch de–energizes solid state relay, interrupting power to the isolation transformer.

There is a thermal fuse in the isolation transformer that is part of the signal path from the On/Off(standby) switch to the solid state relay board. There is also a thermal fuse adjacent to the power resistor. If the transformer or power resistor overheats, the related thermal fuse opens to de–energize the switch on the solid state relay board. De–energizing the switch opens the circuits to both solid state relay coils and thus interrupt power to the transformer. In time, the lack of power allows the transformer or power resistor to cool and the fuse closes again to re–enable the solid state relays. The MOV that is part of the power supply circuit is designed to shunt voltage spikes received by the system. A large voltage spike may cause the MOV to permanently fail.

5–5–3 AC Power Outlets

AC outlets are provided on each unit to provide power for the monitor and any on–board peripherals. The peripheral circuit breaker (CB2) provides overload protection for three outlets. The voltage at the three peripheral power outlets, is dependent upon the connections to the secondary taps of the transformer T1, is either 100, 120, 220, or 240 Vac.

A separate outlet, adjacent to the internal peripheral outlets, is provided especially for the monitor. The monitor is configured to operate only on 120 Vac power. This monitor outlet, connected to the 120 Vac secondary taps of transformer T1 through the monitor circuit breaker (CB4), provides 120 Vac power just for the monitor.

A peripheral bulkhead located inside the lower front opening of the unit provides AC outlets for peripherals installed in the peripheral bay openings. The peripheral bulkhead AC outlets are connected directly to the internal peripheral AC outlets.

5–5–4 DC Power

Two separate DC power supplies are provided to produce DC power at the voltage levels required by the major system components. Each power supply converts 180 Vac input from transformer T1 through power supply circuit breaker (CB3) to a 375 Vdc level. The 375 Vdc is then converted by different DC–DC modules in each power supply to the various operating voltages required by the system.

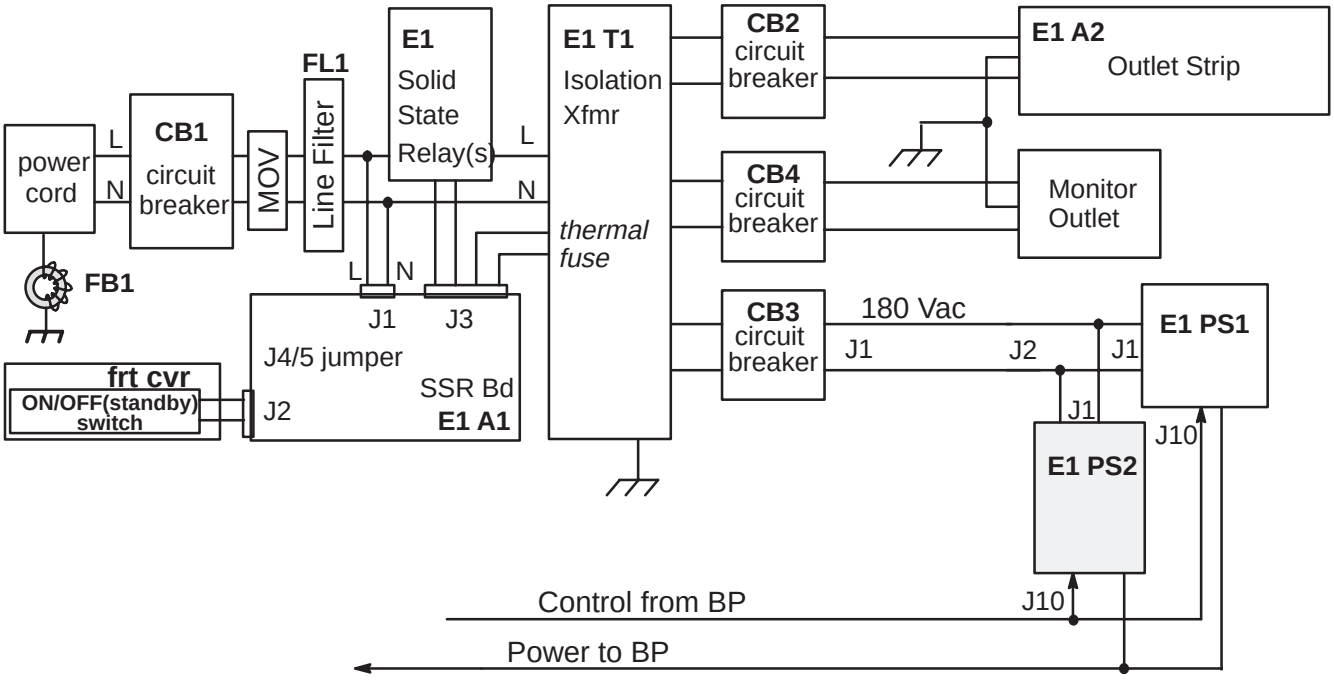

LOGIQ™ 700 POWER SYSTEM
ILLUSTRATION 5–8

5–5–5 Digital DC Power Supply (PS1)

Input. The Isolation Transformer (E1–T1) supplies PS1 with 180 Vac.; this voltage should be within 20% or 144 to 216 Vac. Input frequency may vary from 47 to 63 Hz. Due to the unit's "soft start" design, start up current from T1 should not exceed 70 A.

Operation. The 180 Vac received from the Isolation Transformer is applied the PS1's boost converter. The boost converter delivers an unregulated 370 VDC to the power supply high voltage backplane. The power supply backplane supplies power to the module assemblies that provide the various low voltage, regulated outputs.

Protective Provisions. The power supplies are designed to go into a limited current mode to protect them if the system draws too much power. The system will automatically restart after the overcurrent condition is removed, but the system has to be cycled OFF and then ON again for overvoltage conditions. Remember to wait at least 10 seconds between OFF and ON.

The power supplies will shut down if their temperature gets too hot. This shutdown occurs when the temperature exceeds 55 degrees C (120 degrees F).

Outputs. PS1 supplies a number of outputs used by both the front end and back end. Specifications for PS1 outputs are listed in Table 5–11.

TABLE 5–11
DESCRIPTION OF DIGITAL DC POWER SUPPLY (PS1) OUTPUT SPECIFICATIONS

Module	Name	Volts		Amps (max)	Color	Description
1	5VFE	5	+0.25/–0.5**	80	BRN	FE digital logic, measure at backplane
2	5VFE	5	+0.25/–0.5**		BRN	Boost for module 1
3	5VBE	5	+0.25/–0.5**	40	RED	BE digital logic, measure at backplane
4	5VBE	5	+0.25/–0.5**		RED	Boost for module 3
5	5VN	–5	+0.25/–0.5**	20	WHT/ ORN	ECL supply for FE and BE measure at backplane
6	2VN	–2	±0.1**	15	WHT/ ORN	ECL termination for FE and BE
7*	12VP_BE	+12	±0.6**	8	BLK	for serial and SCSI devices, audio
8*	12VN_BE	–12	±0.6**	8	BLK	for serial control (host), audio

* Voltage from slots 7 and 8 combined to create +24V for muffin fans

** Ripple/Noise should not be more than 150mV peak to peak

5–5–5 Digital DC Power Supply (PS1) (Continued)

TABLE 5–12
DESCRIPTION OF DIGITAL DC POWER SUPPLY (PS1) CONTROL SIGNALS

Pin Number	Signal Description	Signal Voltage
J10–1	Enable/Disable signal for module 1	Enable: 4.5 V to 5 V , Disable: less than 0.7 V
J10–2	Enable/Disable signal for module 2	Enable: 4.5 V to 5 V , Disable: less than 0.7 V
J10–3	Enable/Disable signal for module 3	Enable: 4.5 V to 5 V , Disable: less than 0.7 V
J10–4	Enable/Disable signal for module 4	Enable: 4.5 V to 5 V , Disable: less than 0.7 V
J10–5	Enable/Disable signal for module 5	Enable: 4.5 V to 5 V , Disable: less than 0.7 V
J10–6	Enable/Disable signal for module 6	Enable: 4.5 V to 5 V , Disable: less than 0.7 V
J10–7	Enable/Disable signal for module 7	Enable: 4.5 V to 5 V , Disable: less than 0.7 V
J10–8	Enable/Disable signal for module 8	Enable: 4.5 V to 5 V , Disable: less than 0.7 V
J10–9	Auxiliary 5V regulated power source	+5V ± .25, .3 A
J10–10	Signal Ground	–
J10–11	AC Power OK	TTL logic high indicates AC Power OK
J10–12	General Shutdown of all modules	Enable: 4.5 V to 5 V , Disable: less than 0.7 V

5–5–5 Digital DC Power Supply (PS1) (Continued)

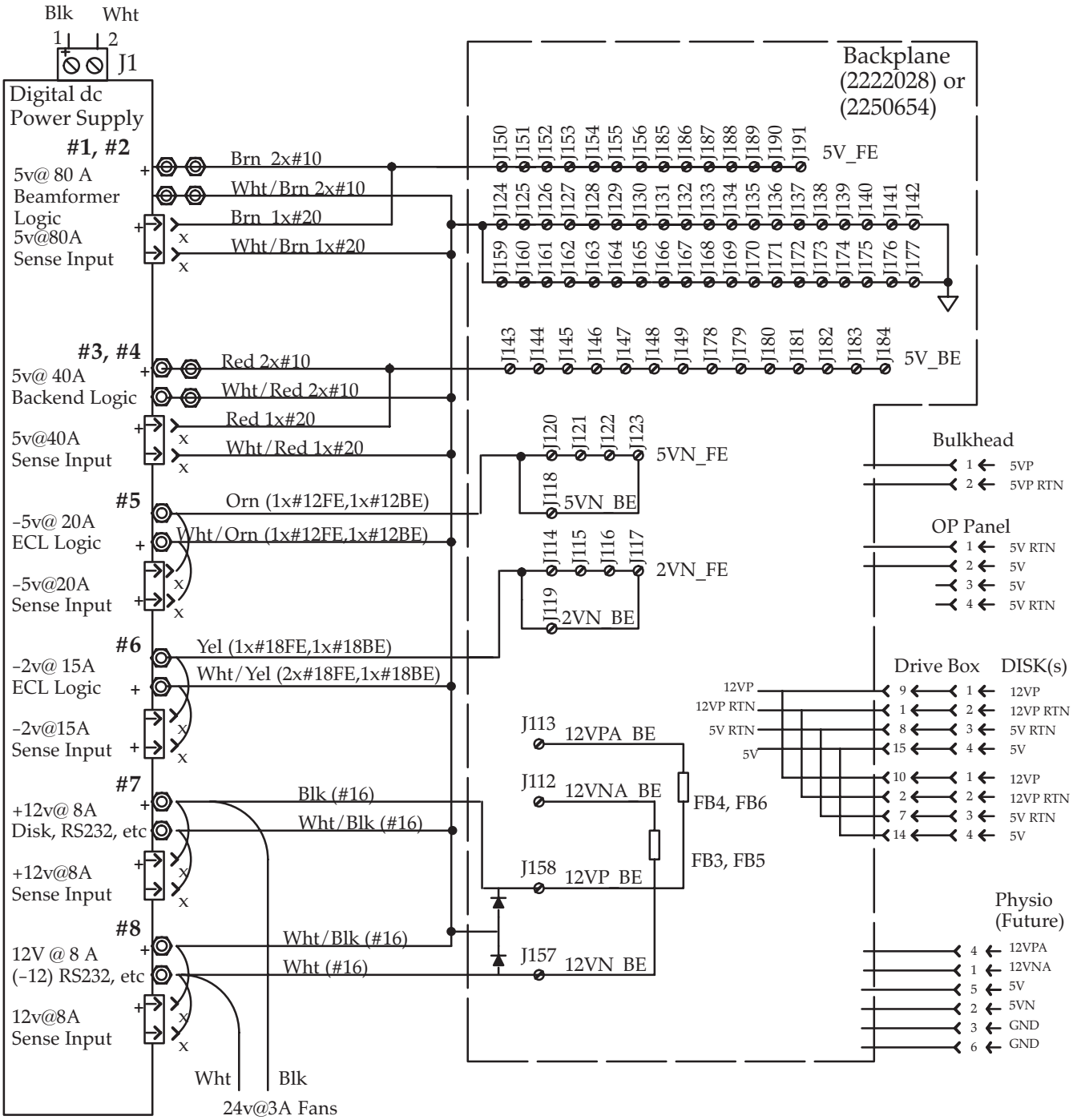

DIGITAL POWER SUPPLY (PS1) POWER DISTRIBUTION
ILLUSTRATION 5–9

5–5–6 Low Noise/High Voltage (LN/HV) Power Supply (PS2)

Input. The Isolation Transformer (E1–T1) supplies PS2 with 180 Vac.; this voltage should be within 20% or 144 to 216 Vac. Input frequency may vary from 47 to 63 Hz. Due to the unit's "soft start" design, start up current from T1 should not exceed 70 A.

Operation. The 180 Vac received from the Isolation Transformer is applied the PS2's boost converter. The boost converter delivers an unregulated 370 VDC to the power supply high voltage backplane. The power supply backplane supplies power to the module assemblies that provide the various low voltage, regulated outputs.

Protective Provisions. The power supplies are designed to go into a limited current mode to protect them if the system draws too much power. The system will automatically restart after the overcurrent condition is removed, but the system has to be cycled OFF and then ON again for overvoltage conditions. Remember to wait at least 10 seconds between OFF and ON.

The power supplies will shut down if their temperature gets too hot. This shutdown occurs when the temperature exceeds 55 degrees C (120 degrees F).

Outputs. PS2 supplies a number of outputs used by both the front end and back end. Specifications for PS2 are listed in Table 5–11. Specifications for PS2 are listed in Table 5–13.

TABLE 5–13
PS2 OUTPUT SPECIFICATIONS

Module	Name	Volts		Amps (max)	Color	Description
1	5VPA	5	+0.25/–0.5*	40	BLU	XDIF Probe switching, analog beamforming, BE video and audio
2	5VPA	5	+0.25/–0.5*		BLU	Boost for module 1
3	5VNA	–5.2	±0.1*	29	W/GRY	TD and EQ ADC, BE video and audio DAC
4	12VPA_FE	12	±0.6*	8	BLK	TD Pulser, XDIF relays, probes, and EQ IIC conversions
5	Empty					
6	+70	70	±4*	3.0	VIO	Combined with +50 to create 120 pulser power for muxed probes
7	+50	50	±3*	3.0	BLK	Combined with +70 to create 120 pulser power for muxed probes, also the Low HV during low voltage mode
8	Empty					

* Ripple/Noise should not be more than 150mV peak to peak

5–5–6 Low Noise/High Voltage Power Supply (PS2) (Continued)

TABLE 5–14
DESCRIPTION OF LOW NOISE/HIGH VOLTAGE POWER SUPPLY CONTROL SIGNALS

Pin Number	Signal Description	Signal Voltage
J10–1	Enable/Disable signal for module 1	Enable: 4.5 V to 5 V , Disable: less than 0.7 V
J10–2	Enable/Disable signal for module 2	Enable: 4.5 V to 5 V , Disable: less than 0.7 V
J10–3	Enable/Disable signal for module 3	Enable: 4.5 V to 5 V , Disable: less than 0.7 V
J10–4	Enable/Disable signal for module 4	Enable: 4.5 V to 5 V , Disable: less than 0.7 V
J10–5	Enable/Disable signal for module 5	Enable: 4.5 V to 5 V , Disable: less than 0.7 V
J10–6	Enable/Disable signal for module 6	Enable: 4.5 V to 5 V , Disable: less than 0.7 V
J10–7	Enable/Disable signal for module 7	Enable: 4.5 V to 5 V , Disable: less than 0.7 V
J10–8	Enable/Disable signal for module 8	Enable: 4.5 V to 5 V , Disable: less than 0.7 V
J10–9	Auxiliary 5V regulated power source	+5V ± .25, .3 A
J10–10	Signal Ground	–
J10–11	AC Power OK	TTL logic high indicates AC Power OK
J10–12	General Shutdown of all modules	Enable: 4.5 V to 5 V , Disable: less than 0.7 V

Note

It is important that the temperature sensor mounted to the 12 gauge gray 5VPA wire is operating properly. You can better manage problems if system temperature monitoring can give you warning messages. To avoid nuisance messages, keep the sensor away from the metal and open to air circulation. If the temperature sensor is disconnected or broken, the system will log *'cannot read'* messages to the diagnostic Error Log. If a power supply gets too hot it could just shut down without any warning.

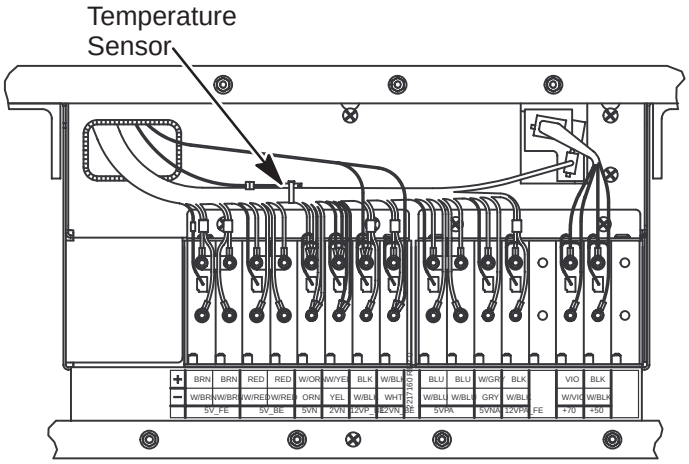

TEMPERATURE SENSOR FOR POWER SUPPLIES
ILLUSTRATION 5–10

5–5–6 Low Noise/High Voltage Power Supply (PS2) (Continued)

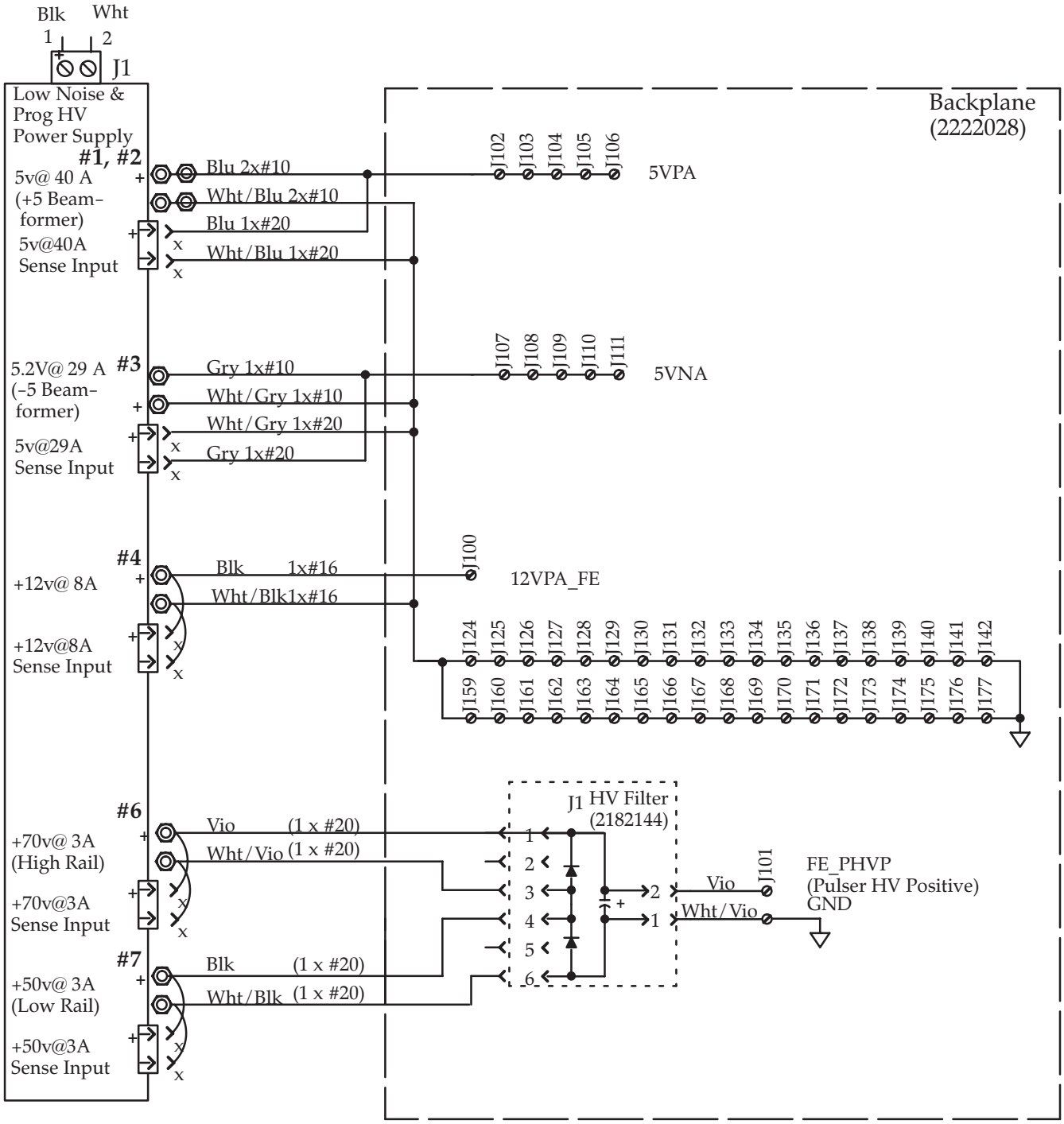

LOW NOISE/HIGH VOLTAGE POWER SUPPLY (PS2) POWER DISTRIBUTION ON 2222028 BACKPLANE
ILLUSTRATION 5–11

5–5–6 Low Noise/High Voltage Power Supply (PS2) (Continued)

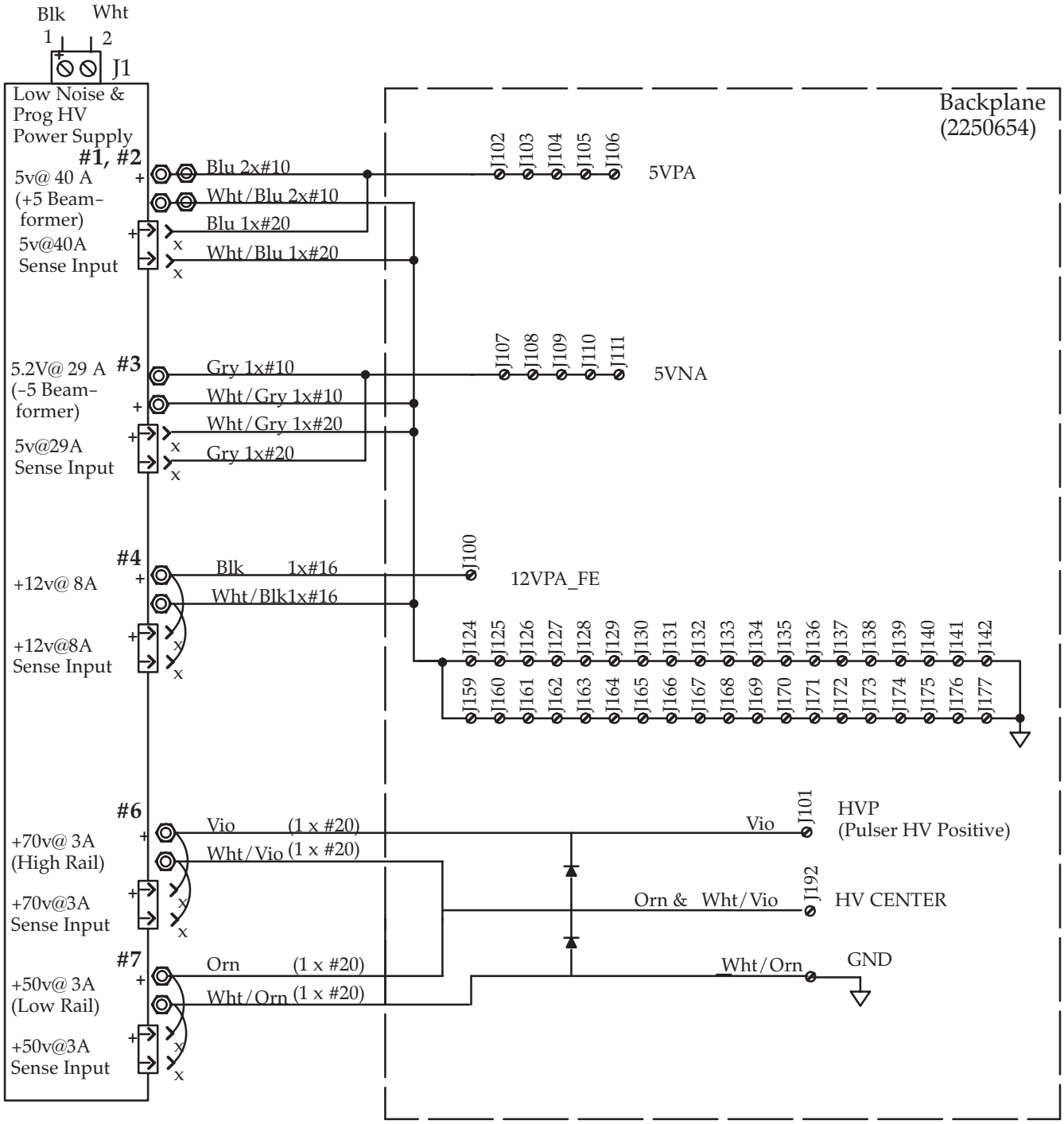

LOW NOISE/HIGH VOLTAGE POWER SUPPLY (PS2) POWER DISTRIBUTION ON 2250654 BACKPLANE
ILLUSTRATION 5–12

5–5–7 Power Destination Points

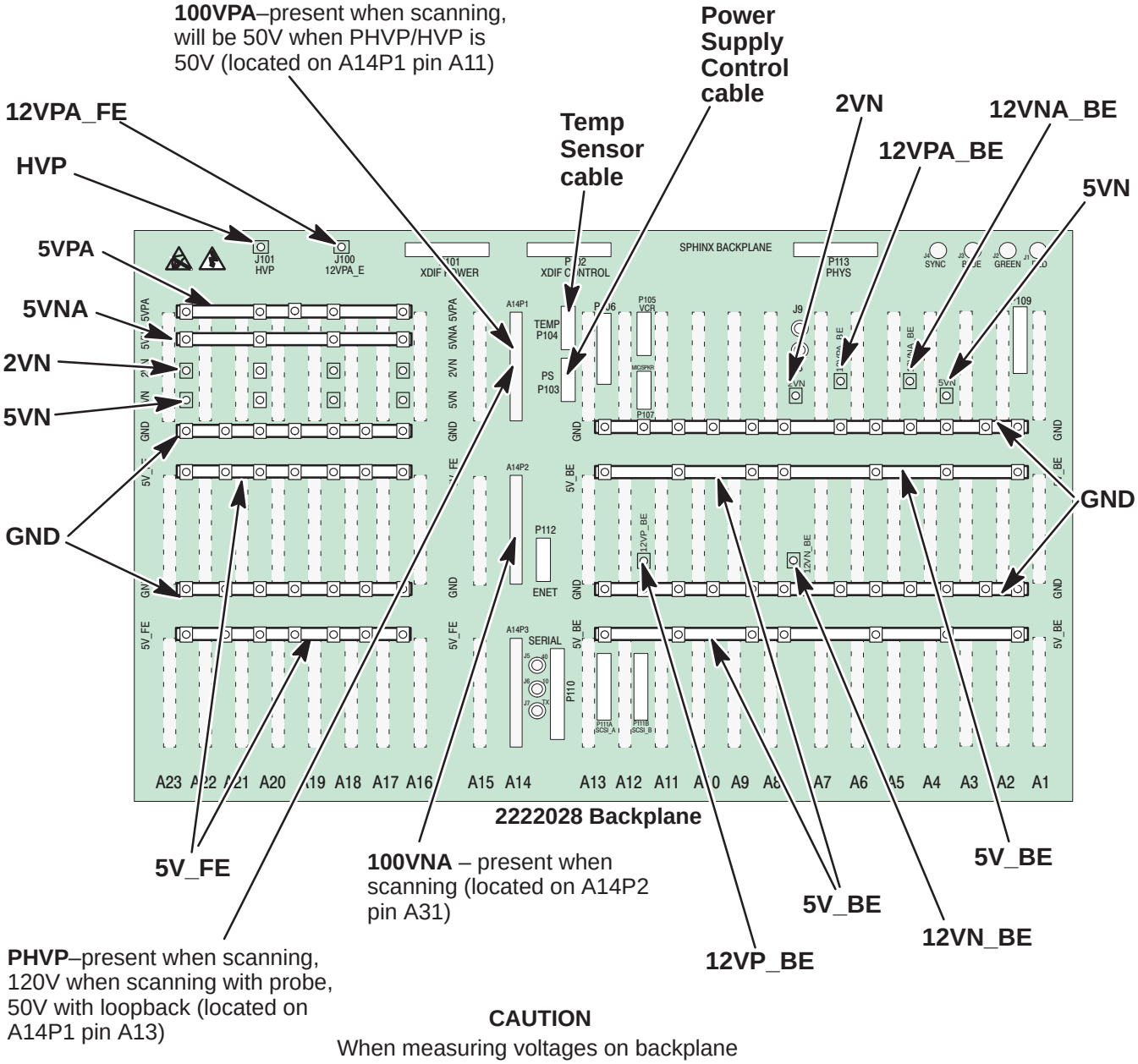

CAUTION

When measuring voltages on backplane connector pins (A14 for example) use the jumper cable (p/n 2252511) supplied with unit. Accidental shorting of the power pins to adjacent pins will cause major damage to the system.

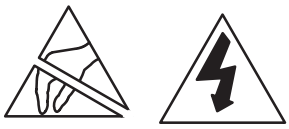

PHYSICAL LOCATIONS OF POWER POINTS ON 2222028 BACKPLANE (UNITS WITH HV FILTER ASSEMBLY)
ILLUSTRATION 5–13

5–5–7 Power Destination Points (Continued)

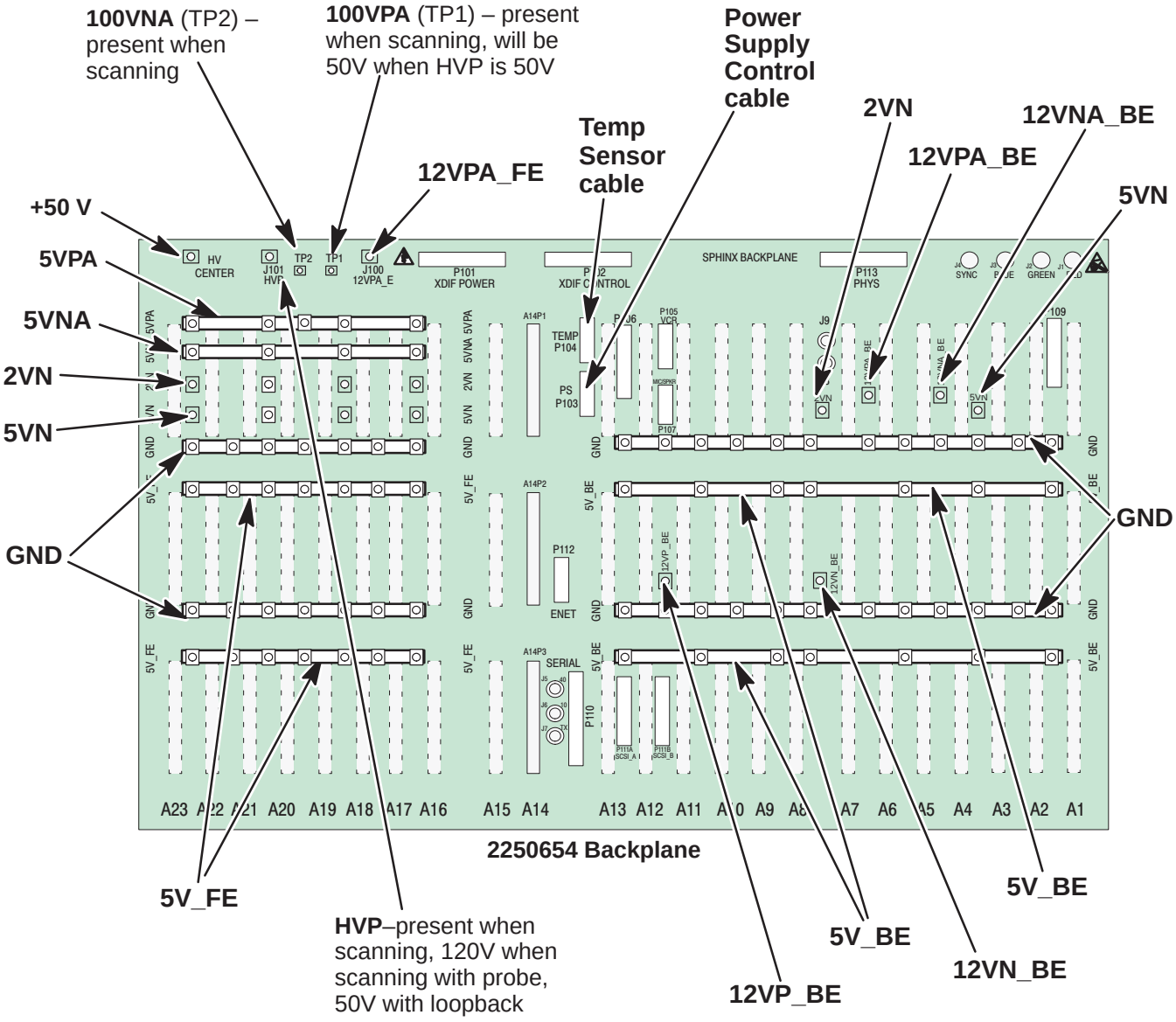

PHYSICAL LOCATIONS OF POWER POINTS ON 2250654 BACKPLANE (UNITS WITHOUT HV FILTER ASSEMBLY)
ILLUSTRATION 5–14

5–5–7 Power Destination Points (Continued)

TABLE 5–15
CONTROL PANEL POWER USAGE

Signal	Source	Inside Control Panel	comments	destination
5V	**BE 5V bus (PS1)** this 5V is also delivered to the system disk and optical disk	46–326159 to OPI/CPU **C1–A1–J1–2,3** (GND 1,4)	from BP	all OPI boards
		C1–A1–J2–31,33 (GND 32,34)	for **VFD**	VFD CN1–31, 33 (GND all even pins)
		C1–A1–J3–22 (GND 12)	for **TGC** pots	C1–A4–J3–29 (GND all even pins)
		C1–A1–J3–24 (GND 21, 23, 25)	for **TGC** LED's	C1–A4–J3–27 (GND 28, 30)
		C1–A1–J3–39 (GND 38) **TGC** P1–10 (GND1,11,14)	for **SW1** LED **SW1** via TGC	TGC J3–12 (GND 1,7,10,13) SW1 J1–10 (GND 1,11,14)
		C1–A1–J3–40 (GND 41) **TGC** P2–10 (GND 1,7,8,12,13)	for **SW2** LED **SW2** via TGC	TGC J3–11 (GND 10) SW2 J1–10 (GND 1,7,8,12,13)
		C1–A1–J5–29 (GND 31)	**SW3** LED's	SW3 J1–29 (GND 2,5,31)
		C1–A1–J5–30 (GND 31)	**SW3** encoders for dual encoder	SW3 J1–30 (GND 2,5,31) SW3 J2–1,2,5 (GND 4)
		C1–A1–J9–8 (GND 5, 6, 7)	for trackball	TB1–8 (GND 6)
		46–326159 to tasklight	from *BP*	to bottom of casting

Do not mistakenly connect mic audio branch to unused connector on VFD; it belongs on the top board

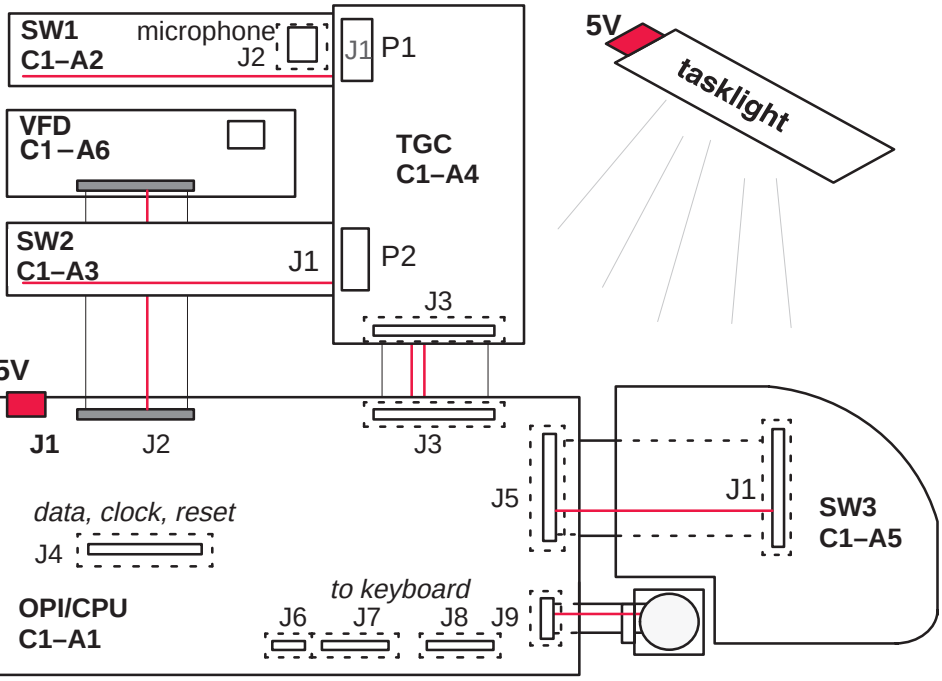

CONTROL PANEL INTERCONNECTS
ILLUSTRATION 5–15

5–5–7 Power Destination Points (Continued)

Note

Ensure XDIF jumper JP1 is in a neutral position (straight up and down).

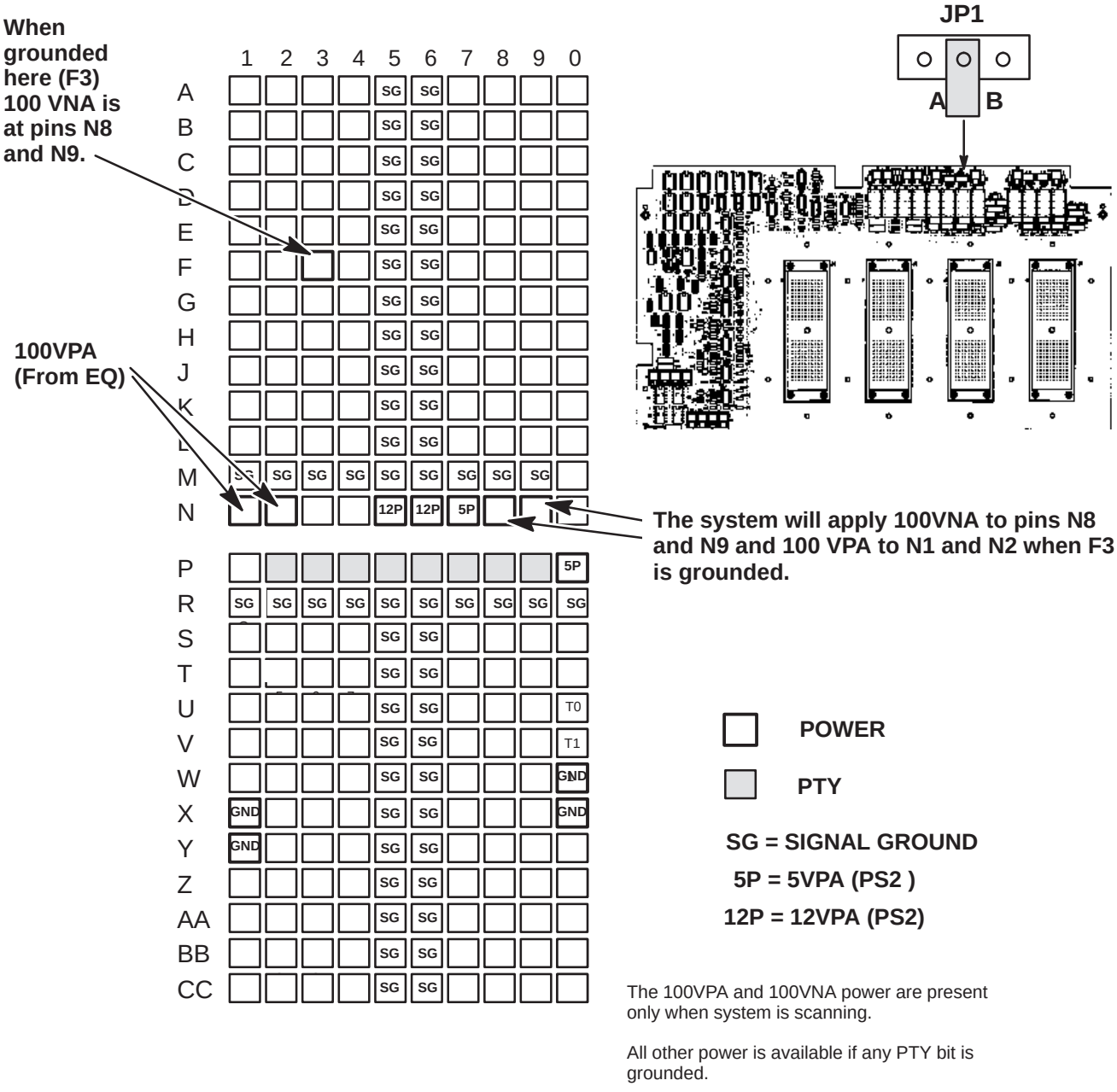

The 100VPA and 100VNA power are present only when system is scanning.

All other power is available if any PTY bit is grounded.

PROBE POWER POINTS ON XDIF CONNECTOR
ILLUSTRATION 5–16

Intentionally blank

SECTION 6 – DIAGNOSTIC SOFTWARE

TABLE OF CONTENTS

SECTION	TITLE	PAGE
6–1	INTRODUCTION	6–2
6–1–1	Purpose	6–2
6–1–2	Software Service Tools	6–2
6–1–3	Troubleshooting	6–2
6–2	SERVICE SOFTWARE TOOL DESCRIPTIONS	6–3
6–2–1	Visual Channel Alive	6–3
6–2–2	External Video Inputs	6–5
6–2–3	Video Test Patterns	6–7
6–3	DIAGNOSTICS	6–13
6–3–1	Diagnostics Interface	6–13
6–3–2	Diagnostics Procedure Summary	6–14
6–3–3	Diagnostics Function Keys	6–15
6–3–4	Connect the VT220 or PC to the LOGIQ™ 700	6–16
6–3–5	Startup the gemsC Diagnostic Software	6–17
6–3–6	Description of Menu Bar of gemsC Top Level Screen	6–19
6–3–7	Description of gemsC Diagnostics Screen	6–20
6–3–8	Test Input Choices	6–21
6–3–9	Looping Subtests	6–22
6–3–10	Running Diagnostic Tests	6–23
6–3–11	Viewing Diagnostic Test Results	6–24
6–3–12	Exiting Diagnostics	6–25
6–3–13	Loopback	6–26
6–4	VIEW LOGS	6–28
6–4–1	Available Log Choices	6–28
6–4–2	Error Log and Error Window	6–29
6–4–3	Temperature Log	6–30
6–4–4	Power–Up Log	6–32
6–4–5	System Configuration Log	6–35
6–5	DIAGNOSTIC DESCRIPTIONS	6–41
6–5–1	Diagnostic Tests	6–41
6–5–2	RF Troubleshooting	6–54
6–5–3	Calibration	6–55
6–5–4	Noise Floor	6–59
6–6	LOADING SYSTEM SOFTWARE	6–60
6–7	IMPORTANT TROUBLESHOOTING HINTS	6–67

6–1 INTRODUCTION

6–1–1 Purpose of Section

This section describes how to setup and run the tools and software that help maintain image quality and system operation. Very basic host, system and board level diagnostics are run whenever power is applied. Some Service Tools may be run at the application level. However most software tests require a White Service Key MOD disk and the attachment of an ANSI terminal or a personal computer running VT220 terminal emulation software to the SERVICE port.

6–1–2 Software Service Tools

Software Service Tools are started from application level with a **[Code K]** or **[Δ + 1]**. These offer a quick, visual way to check video or beamforming quality.

6–1–3 Troubleshooting

Presets, Service Tools and Diagnostics can be used to find and correct problems. Check Presets to verify that the desired machine behavior has been selected. Visual Channel Alive in Application mode can help determine whether a channel/element is bad. The diagnostics Noise Floor, Transmit 1, Analog/Receive, Calibration and some experimentation can help isolate a channel problem to a TD board, an RF cable, XDIF connector, or a bad probe element. Swap TDs, or RF cable connectors or try another XDIF slot to determine the cause of a beamforming fault. The Path diagnostics evaluate the Back End performance. Video Test Patterns and Video Inputs can imply whether a video path or peripheral is bad.

6–2 SERVICE SOFTWARE TOOL DESCRIPTIONS

6–2–1 Visual Channel Alive

Description. Visual Channel Alive provides a visual indication of beamformer channel or probe element integrity. This tool tests all parts of the beamforming chain in a general way using the Gray 2D image path. The probe, if one is used, is also tested. The system fires one vector for each loopback channel or probe element.

The test configures TD memory for all 128 channels such that for the first 128 firings of a scan, all channels except one are receive (or transmit) apodized (i.e. only one channel contributes to the beam sum). For firing 0, only channel 0 is active, for firing 1 only channel 1 is active, etc. The beamforming coefficients for the center beam are copied to all of the other beams, and then the apodizations are applied. This scheme should produce a uniform image which will make beams corresponding to defective channels easier to identify.

Signal sources can be noise (high system gain), external signal injected into loopback, or TD pulsers. The two Visual Channel Alive Transmit tests use TD pulsers for the signal source.

The test first runs a check on the TD channels. Then if a transmit test was selected, all channels are set to receive, and for each beam a different channel is set to transmit.

There is no PASS/FAIL status produced by this test; you must visually deduce channel operation. If a channel is bad, the image along the vector (direction) for which that channel is supposed to be active will be “different” from those corresponding to “good” channels. When the test is exited, the system reboots automatically.

Minimum System. Entire Front End, all cables, MC, SS, BMP, ALM, XY, VP, monitor, OPI/CPU, LOOPBACK or probe, if probe: water tank or phantom

Tools. Loopback is sufficient for testing Receive W/Transmit. Otherwise, a probe must be used.

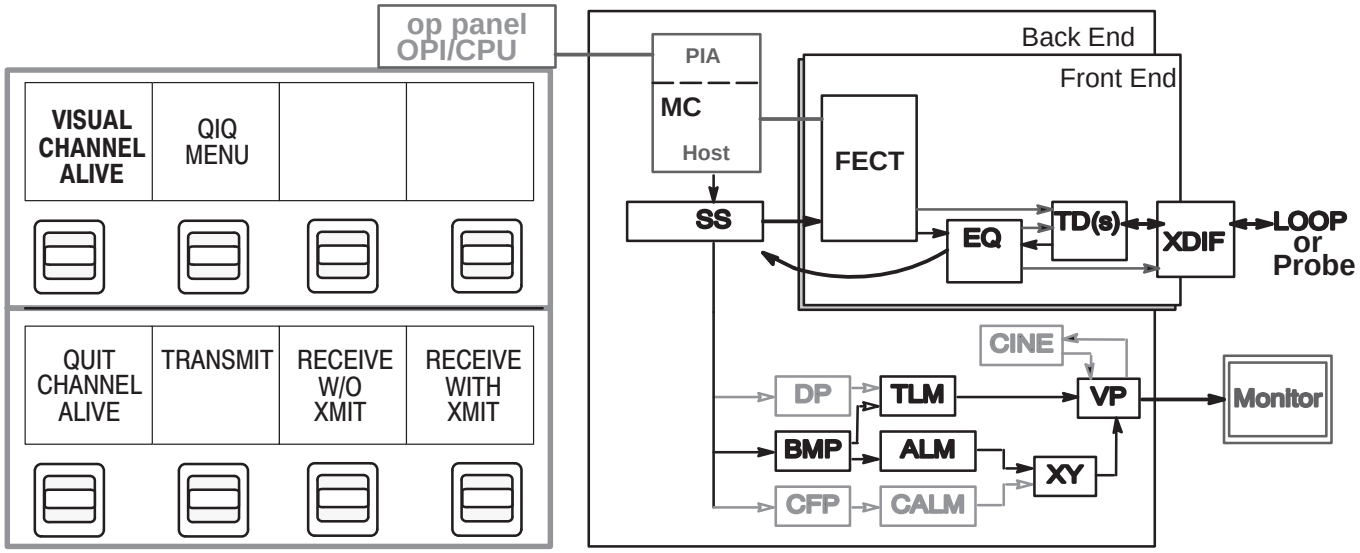

TEST PATH FOR VISUAL CHANNEL ALIVE
ILLUSTRATION 6–1

6–2–1 Visual Channel Alive (Continued)

Depending on the test, one channel/element is forced to be active on transmit or receive. Vector 1 may be transmitted or received by channel 1, vector 2 is transmitted or received by channel 2. The other channels are turned off. For 192 element probes, the active channel wraps if there are more vectors than elements available. For 128 element probes, 128 vectors are used.

TABLE 6–1
TESTS IN VISUAL CHANNEL ALIVE

Test		What it does
TRANSMIT	Transmit One/Receive All	Transmits on one channel (element) per vector and receives on all channels.
RECEIVE W/O XMIT	Receive w/o Transmit	Receives on one channel (element) per vector (no XMIT).
RECEIVE WITH XMIT	Transmit All/Receive One	Transmits on all channels and Receives on one channel (element) per vector.

Procedure. Perform the Visual Channel Alive Tests as follows:

1 . Attach probe (or loopback if desired for Receive with Transmit test only) to XDIF slot to be tested.

2 . Adjust controls for consistency and maximum brightness: Select the linear Gray Map **[Code M]** which is 'E.' Open sector to maximum with joy key to adjust Acoustic Output and Gain to maximum value. Push the TGC knobs all the way to the right. Adjust depth to 10 cm.

3 . With software in Application mode, not Service, hold **[Option Δ]** and type **[1]**. The Option key is on the right side of the space bar.

4 . Toggle the softkey switch that selects "**Visual Channel Alive**." Click on the desired test. Patient ID will change to reflect the name and status of the diagnostic being run. Wait while the system sets up this test

5 . The 128 element loopback or sector probe will image 128 vectors rather than the normal amount. If you see a black line in the image, run the Transmit 1 and Analog Receive diagnostics. The 192 element linear probe will image 192 vectors which may show bad commutation. Run the Probe Control diagnostic to test the system control. If the system works, the problem must be with the probe.

6 . To exit, click **Quit Channel Alive**. Press **[Exit]** to return to application mode. The system will reboot to clear diagnostic values.

Both Transmit and Receive with Transmit:

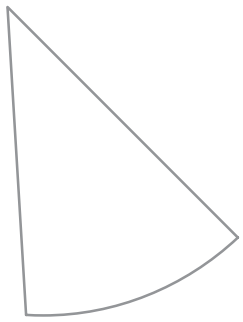

SECTOR IMAGES FOR 128 ELEMENTS
ILLUSTRATION 6–2

6–2–2 External Video Inputs

Description. Use this Service Software **[Code K]** tool to verify that a peripheral has video output. This tool can also be used to test a part of the video interconnect cable from the bulkhead to the Back End backplane, and a part of the VP board.

The VP normally delivers its real time or CINE ultrasound images to the monitor. This tool will switch the monitor video from the system source to a designated peripheral connected to the bulkhead S Video In, the Print RGB IN (signals must be 31 Khz noninterlaced to work), VCR Composite IN, or AUX Composite IN.

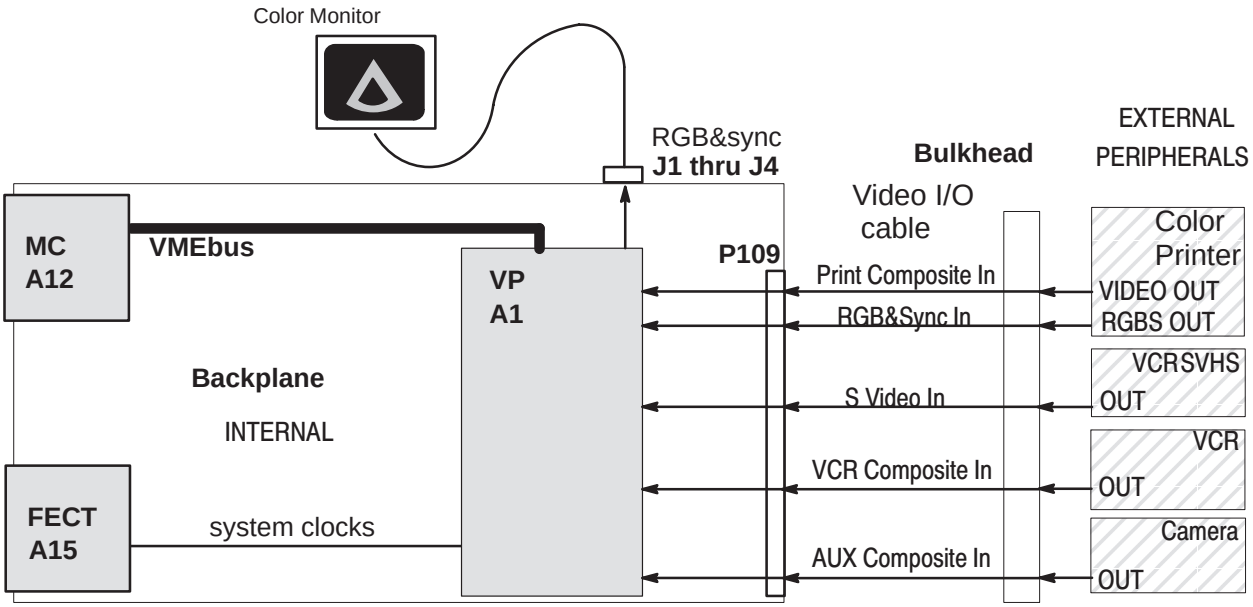

DIAGRAM OF EXTERNAL VIDEO INPUTS TESTS
ILLUSTRATION 6–3

TABLE 6–2
PORTION OF VIDEO I/O CABLE USED DURING EXTERNAL VIDEO INPUTS TESTS

BP P109	Signal	Back Panel Label	Bulkhead
3 & 4	VPTR_VP_RED	**Print Video In** with Red label	J21 (center & shield)
28 & 29	VPTR_VP_GRN	**Print Video In** with Green label	J20
5 & 6	VPTR_VP_BLU	**Print Video In** with Blue label	J19
30 & 31	VPTR_VP_SYNC	**Print Video In SYNC**	J18
19 & 20	VCR_VP_LUMA	**SUPER VHS VIDEO IN** Y or luminance	J13 3 &1
44 & 45	VCR_VP_CHROMA	**SUPER VHS VIDEO IN** C or chrominance	4 & 2
21 & 22	VCR_VP_COMP	**VCR COMPOSITE VIDEO IN**	J24
46 & 47	AUX_VP_COMP	**PRINT COMPOSITE VIDEO IN**	J26

6–2–2 External Video Inputs (Continued)

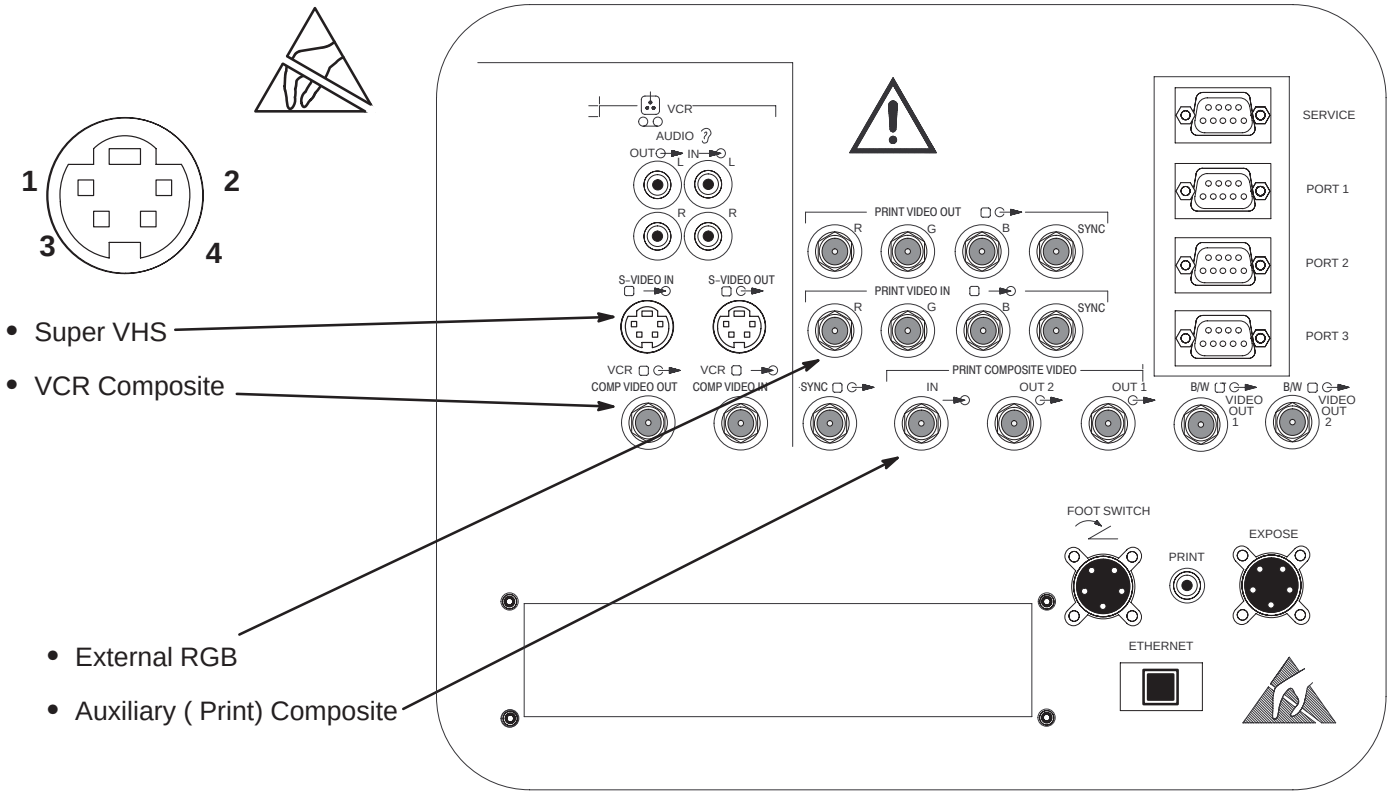

CONNECTION POINTS FOR EXTERNAL VIDEO INPUTS
ILLUSTRATION 6–4

CAUTION

Practice good ESD prevention when you disconnect or attach items to the bulkhead. A ground strap around your wrist, clipped to the ground stud on the back, should prevent large electrical potential discharges into the BE backplane which could damage circuit boards and therefore system performance. Refer to Section 1 for more information about ESD prevention.

Procedure. When the **External Video Inputs** softkey is pressed, all keys except the softkey paddle switches are locked out. Click the **Video Input** softkey to scroll through the various Video Input choices. The current choice is reported on the bottom of the VFD square. Internal RGB is the normal, default video input to the monitor. The external choices are: SVHS, VCR Composite, Print Composite. To quit, click **Quit Video Inputs** and then press **[Exit]**.

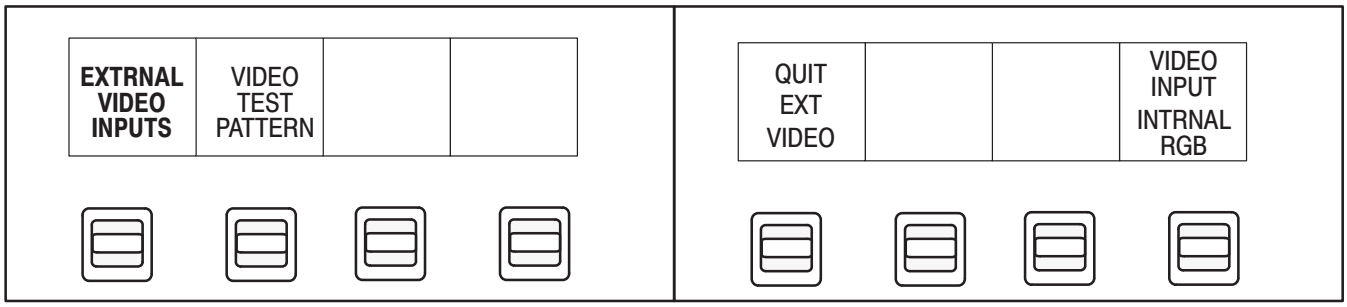

6–2–3 Video Test Patterns

Description. Video Test Patterns provides tools to check monitor quality. These test patterns can also be used to check the peripherals ability to record and reproduce video outputs from the LOGIQ 700.

Each video test pattern has a specific purpose. The test patterns arrive at their video destination as a reverse version of Digital Archive. The CINE and VP boards and the VMEbus are used to deliver the digital images of the Test Patterns generated by the MC.

RGB values on the monitor may look a little different on the hardcopy. And colors that look the same on the hardcopy may actually have slightly different RGB values.

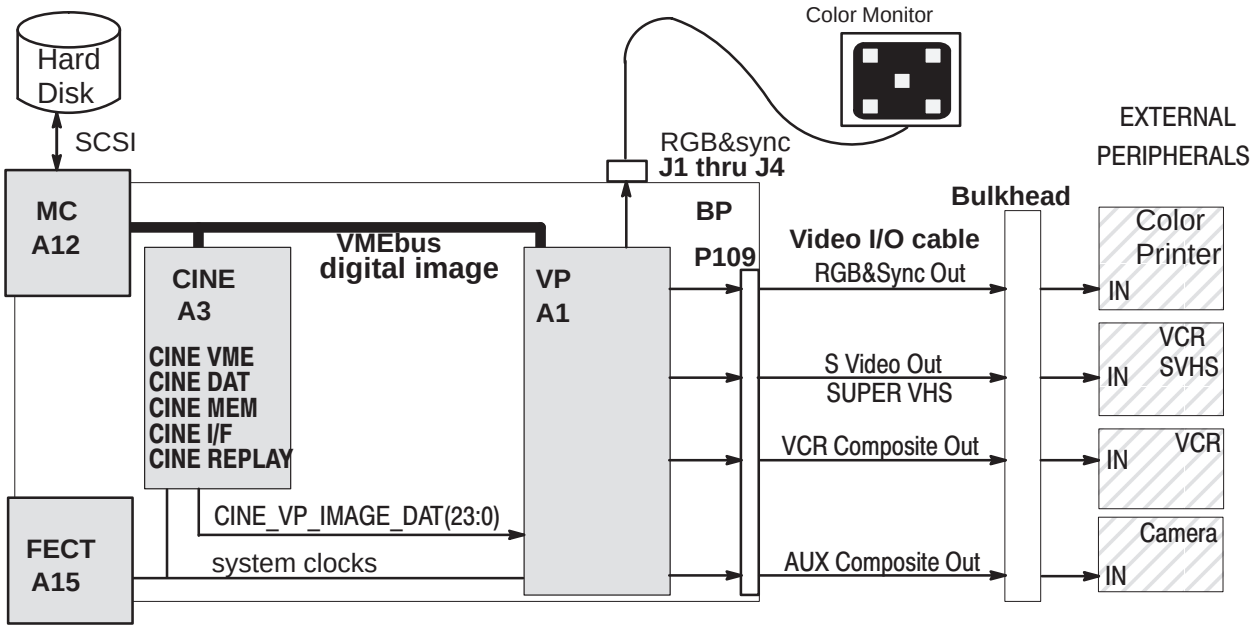

DIAGRAM OF VIDEO TEST PATTERNS
ILLUSTRATION 6–5

6–2–3 Video Test Patterns (Continued)

TABLE 6–3
PORTION OF VIDEO I/O CABLES USED BY VIDEO TEST PATTERNS

BP P109	Video Signal	Bulk–head	BP P109	Video Signal	Bulk–head
7	VP_VPTR_RED	J11	32	VP_VPTR_GRN	J10
8	GND		33	GND	
9	VP_VPTR_BLU	J9	34	VP_VPTR_SYNC	J8
10	GND		35	GND	
11	VP_AUX1_BW	J12	36	VP_AUX2_BW	J22
12	GND		37	GND	
13	VP_VCR_LUMA	J7	38	VP_VCR_CHROMA	J7
14	GND		39	GND	
15	VP_VCR_COMP	J25	40	VP_AUX1_COMP	J28
16	GND		41	GND	
17	VP_AUX2_COMP	J27	42	VP_VCR_TTLSYNC	J23
18	GND		43	GND	

Procedure. Use the video test patterns as follows:

1 . To enter Video Test Patterns, press **[Code K]** while application software is active.

2 . Click **Video Test Patterns** and wait for file to be transferred to CINE.

3 . Use the rocker switch or the trackball to display the desired pattern.

4 . To exit, press **(Freeze)**.

6–2–3 Video Test Patterns (Continued)

Available Test Patterns. The test patterns available with the Video Test Patterns software tool include those listed below plus those shown in illustrations 6–6 through 6–12.

- **RED,GRN,BLU**
  Pure RED, GREEN, or BLUE covering complete screen
- **Black**
  Pure BLACK covering complete screen
- **Horizontal Grill**
  Horizontal black and grey bars 5 pixels wide
- **Vertical Grill**
  Vertical black and grey bars: black to white over white to black

PROVIDES 16 LEVELS OF GRAY TO EVALUATE BRIGHTNESS AND CONTRAST SETTINGS

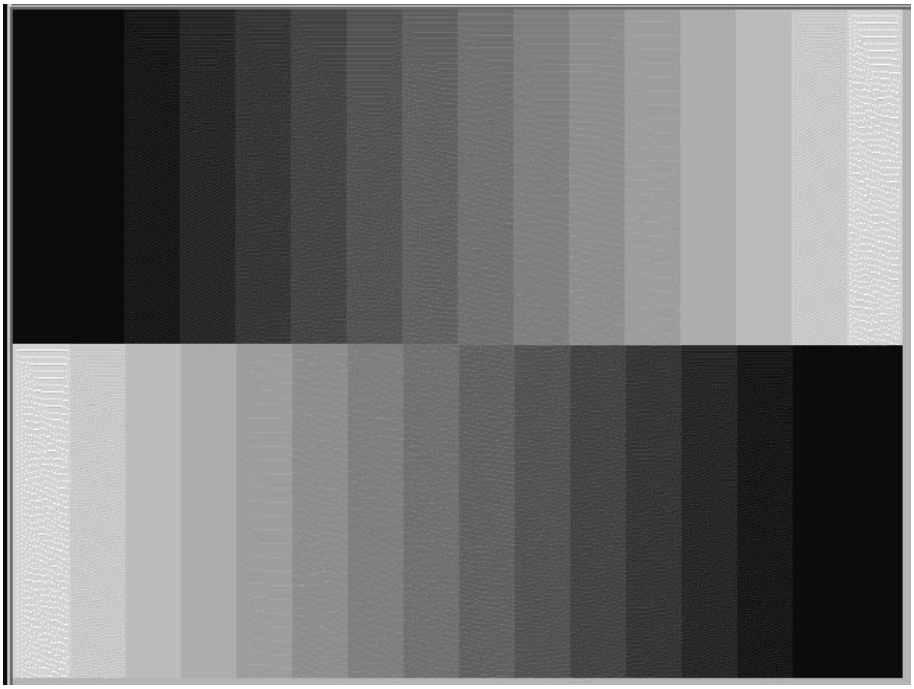

FIRST BRIGHTNESS AND CONTRAST VIDEO TEST PATTERN
ILLUSTRATION 6–6

6–2–3 Video Test Patterns (Continued)

PROVIDES A BLACK SCREEN WITH FIVE WHITE BOXES TO EVALUATE BRIGHTNESS AND CONTRAST

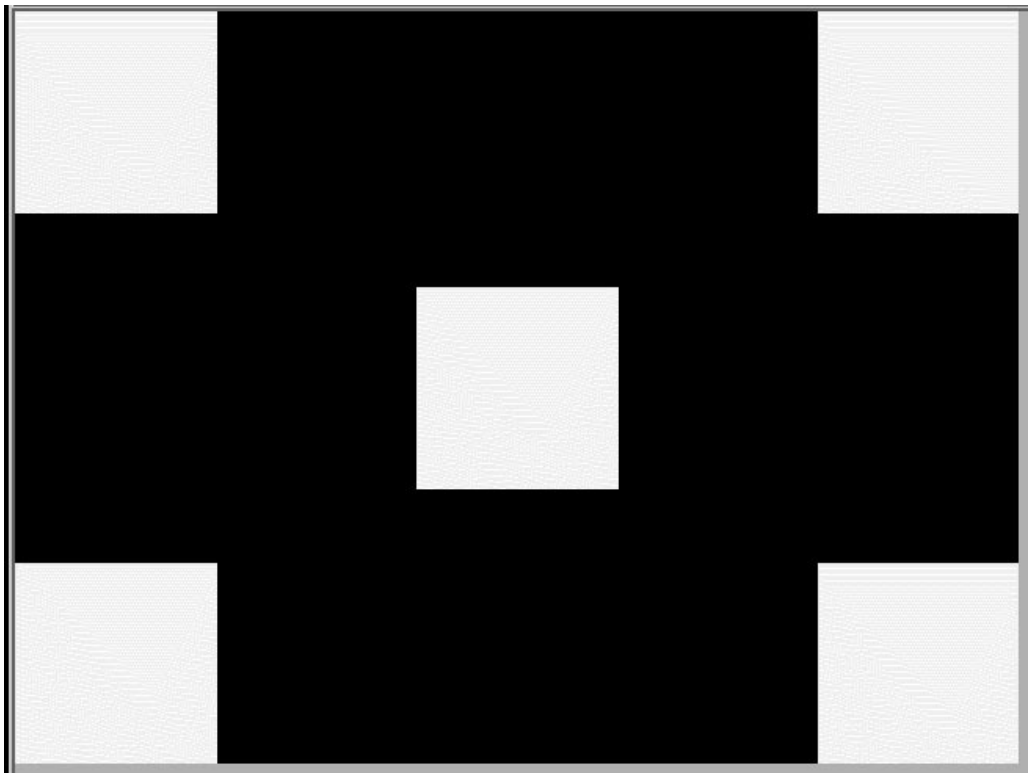

SECOND BRIGHTNESS AND CONTRAST VIDEO TEST PATTERN
ILLUSTRATION 6–7

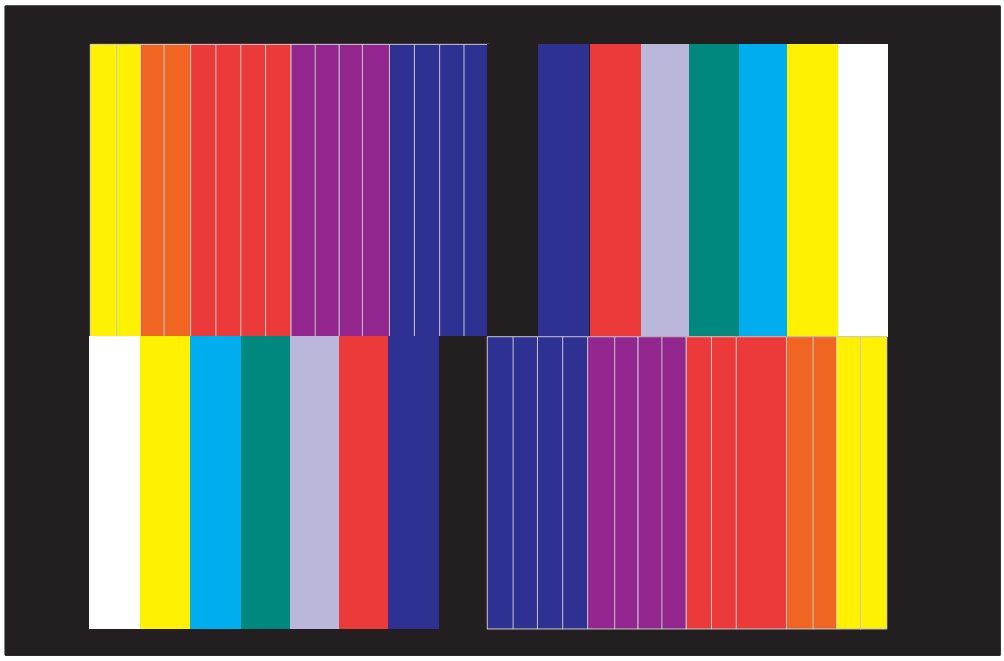

PURE COLORS

PROVIDES NARROW GRADUATIONS FROM YEL TO ORN TO RED TO PUR TO BLU; PLUS WIDER COLOR RECTANGLES OF WHT, YEL, CYAN, GRN, VIO, RED, BLU, AND BLK.

PURE COLORS 1

PROVIDES FOUR HORIZONTAL AREAS: WHITE THEN RED ON TOP AND GREEN THEN BLUE ON BOTTOM

PURE COLORS VIDEO TEST PATTERNS
ILLUSTRATION 6–8

6–2–3 Video Test Patterns (Continued)

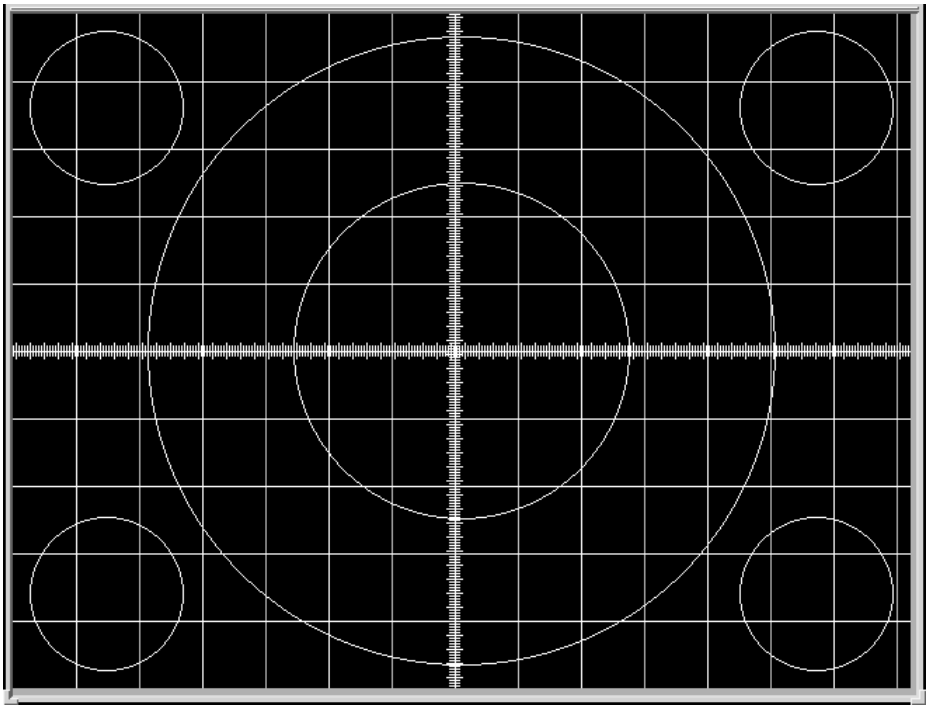

PROVIDES BLACK BACK–GROUND WITH WHITE GRID AND CIRCLES OF SINGLE PIXEL WIDTH TO HELP DETERMINE LINEARITY OF THE SYSTEM MONITOR OR PERIPHERAL HARD COPIES.

LINEARITY VIDEO TEST PATTERN
ILLUSTRATION 6–9

PROVIDES IMAGE THAT HELPS DETERMINE DISPLAY'S LINEARITY AND BRIGHTNESS LEVELS.

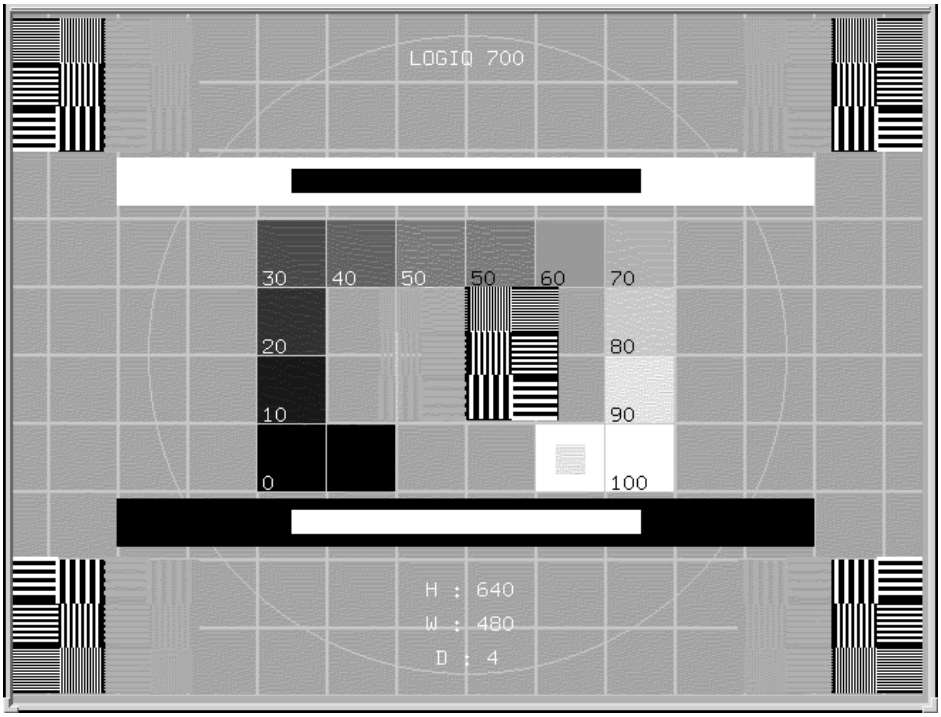

SMPTE VIDEO TEST PATTERN
ILLUSTRATION 6–10

6–2–3 Video Test Patterns (Continued)

PROVIDES BLACK BACKGROUND WITH HORIZONTAL AND VERTICAL LINES 2 PIXELS WIDE AND A DOT AT THE CENTER OF EACH SQUARE

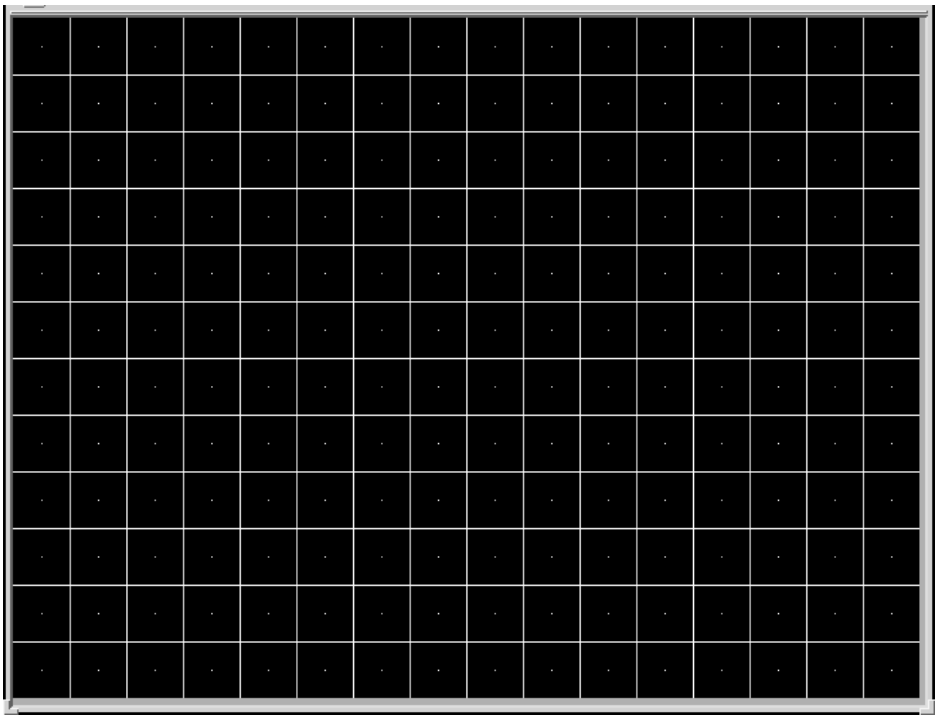

LINEARITY AND CONVERGENCE VIDEO TEST PATTERN
ILLUSTRATION 6–11

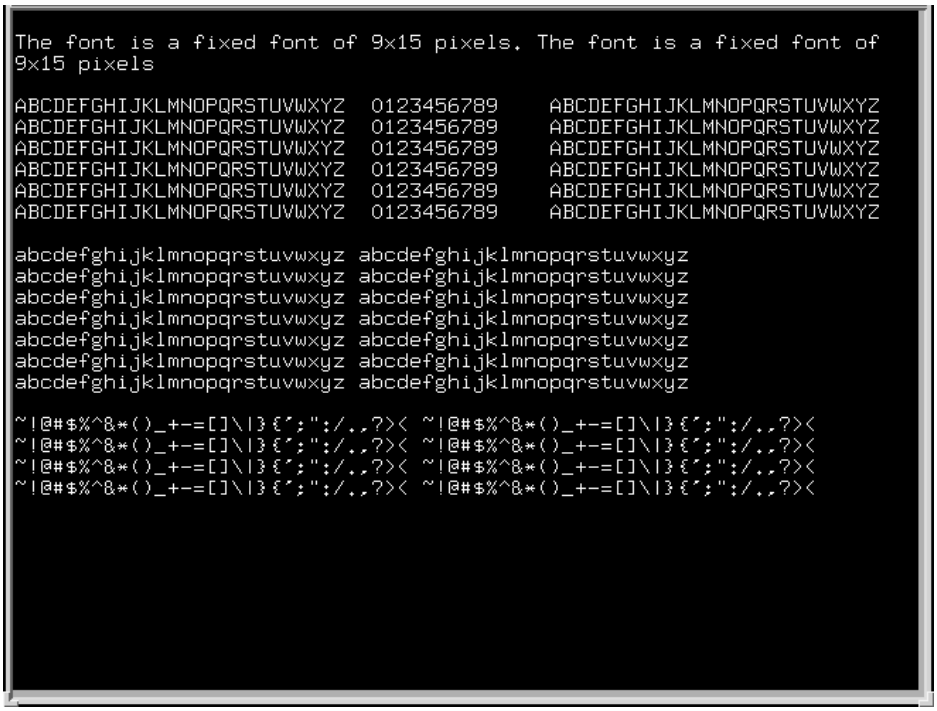

PROVIDES AN ASCII TEXT SET FOR DISPLAY

TEXT VIDEO TEST PATTERN
ILLUSTRATION 6–12

6–3 DIAGNOSTICS

6–3–1 Diagnostics Interface

Access. A VT220 terminal or PC with the correctly configured VT220 terminal emulation software provides access to the LOGIQ™ 700 Master Controller CPU and the diagnostic software on the system disk via a serial port. Either the bulkhead port or the serial port on the MC board can be used. The MC's port can help you determine whether the MC or the path from the MC to the bulkhead is bad. To use the MC port, the serial cable must be disconnected from the BP.

SERVICE Serial Port. The DB9 serial port labeled "**SERVICE**" on the LOGIQ™ 700 back panel provides access to the diagnostic software. Through this port, diagnostic software can be run, and system files and images can be transferred from the LOGIQ™ 700 to another computer. The LOGIQ™ 700 host and the diagnostic computer must be configured to communicate with this port. A female DB9 to female DB9 null modem cable must be used to connect the two computers.

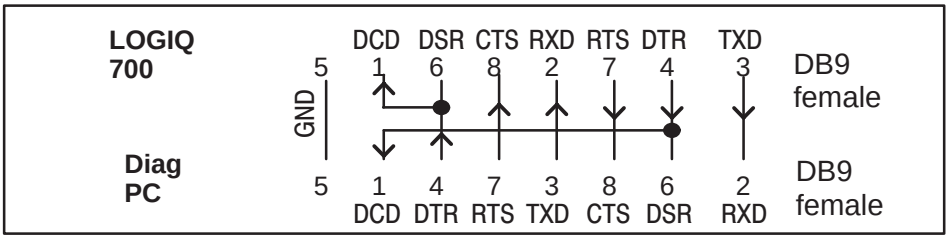

PIN ASSIGNMENTS FOR CABLE FROM LOGIQ 700™ TO PC
ILLUSTRATION 6–13

Minimum System. These items must be good to access diagnostics: MC, FECT (system timing), SCSI subsystem, power supplies. All diagnostics are run by the MC from the **LOGIQ™ 700**'s hard drive through a PIA isolated serial port. Therefore, if the MC or hard drive are the failing component, diagnostics cannot be accessed. If the MC, hard drive, FECT (system timing), power supplies, or power cables are inoperable, the system cannot operate.

Emulation Software. The software on the diagnostic PC should be configured with these settings:

Settings:	8 data bits–no parity–1 stop bit
Terminal Emulation:	**VT220**
Terminal Setup...	**[Enter]** select **Terminal** keys, not Windows
Baud Rate:	38400
Port type:	Standard Com Port
Port name:	COM1
Port Setup...	HW handshaking (RTS/CTS) on and SW handshaking off
Modem:	Direct Connect (Cabled)
Priority:	Normal

If Functions Keys need to be programmed...

Key	ASCII command	Key	ASCII command	Key	ASCII command	Key	ASCII command
F1	<esc> OP	**F6**	<esc> [17~		<esc> [A	**PG DWN**	<esc> [6~
F2	<esc> OQ	**F7**	<esc> [18~	↑	<esc> [B	**PG UP**	<esc> [5~
F3	<esc> OR	**F8**	<esc> [19~	↓	<esc> [C		
F4	<esc> OS	**F9**	<esc> [20~	→	<esc> [D		
		F10	<esc> [21~	←			

6–3–2 Diagnostics Procedure Summary.

Detailed test procedures can found in a later portion of this section. There is also a summary of the available diagnostics at the end of this section.

1 . Starting gemsC. Connect the unit to a PC and start a gemsC diagnostic as follows:

- **a .** Attach the diagnostic PC to the SERVICE port with the **diagnostic PC cable**.
- **b .** Start the PC terminal emulation **software**; verify PC and 700 are ‘connected.
- **c .** Insert the MOD ‘**White Service Key**’ into the fully booted unit.
- **d .** Type: **[Enter]gemsC[Enter]** at the diagnostic PC.
- **e .** When the Disclaimer screen appears, press **[Esc][Esc]**.
- **f .** When the Diagnostic top menu appears, press **[Enter]** ONCE.
- **g .** Wait 30 seconds for the list; press **[F3]** when it appears.
- **h .** Use **down arrow** to highlight desired test, then press **[Enter]** *Use List File.*

2 . Using gemsC. A few notes about gemsC operation:

- **a .** Some diagnostics end in Auto or Manual. Auto has no popups; Manual has popups to vary test parameters.
- **b .** When Diagnostics are entered, the system goes into a Disruptive mode. To return system parameters to clinical applications the system must be rebooted. If, after running disruptive tests,the System Configuration software is unable to correctly read EEPROMs, regain access to gemsC, then ‘View’ the Configuration Log before you enter the ‘Diagnostics’ menu bar choice.

3 . Navigating within gemsC. To navigate within gemsC, use techniques as follows:

- **a .** Use **right arrow** to highlight test result, then press **[Enter]** to see them.
- **b .** Use **[Esc][Esc]** to exit the Capture Log, any diagnostic log or popup.
- **c .** To access Diagnostic menu bar, press **[Esc] [Esc]** , this action also closes a popup.
- **d .** To move the cursor to the next box on the screen, press **[F3].**
- **e .** To move the highlight within the current box, use the **arrow keys**:
  DOWN ↓ or UP ↑ or RIGHT → or LEFT ←
- **f .** To select the highlighted directory or test or option, press **[Enter]**.
- **g .** When choices are available, press **[F2]** to see them; **[Esc] [Esc]** to close.
- **h .** To close the HELP window, press **[Esc] [Esc].**
- **i .** To refresh the screen, press **[F4]**

4 . To Exit gemsC.

- **a .** To focus back on the menu bar, press **[Esc] [Esc]**. If EXECUTE menu appears, press **[Esc] [Esc]** again.
- **b .** Press **[Enter]** to see all choices in the menu bar.
- **c .** Press **[x]** to select exit. Press the down arrow to highlight the choice.
- **d .** Press **[Enter]** to leave diagnostics and reboot into applications mode.

6–3–3 Diagnostics Function Keys.

Keystroke commands for the gemsC diagnostic software are described in the table below.

TABLE 6–4
KEYSTROKE COMMANDS FOR gemsC DIAGNOSTICS

Key	What it does
↓↑→←	ARROW KEYS move the highlight within current box.
[F2]	Displays all options available in a popup menu when the diagnostic has choices. The software will show the default choice in a header line in black near the top of the window. • Use **[F10]** to accept the current choices. • Use **[Esc][Esc]** to escape the Options popup.
[F3]	Moves the highlight between Category (directory), and Diagnostic (filename).
[F4]	Refreshes/redraws the text and graphic characters.
[F10]	Accepts the current choice(s), executes the highlighted action and closes the popup menu. It is also known as the Function ten key.
[Pg Dn]	Displays portion of text file one screenful below current display until it reaches END position.
[Pg Up]	Displays portion of text file one screenful above current display until reaching HOME position.
[Home]	Moves focus to start of a text line if not there, once there a press moves focus to the beginning of the current screen, another press moves focus to the beginning of the text file.
[End]	Moves focus to end of the text line, a second press moves focus to the end of the current screen, a third press moves focus to the end of the text file where a press of the **[Home]** key will show you the start of the last line.
[Enter]	Either selects the highlighted path or starts executing the highlighted test.
[ESC] [ESC]	Closes current popup menu or window; if none open, returns focus to diagnostic menu bar
[Ctrl A]	Aborts a diagnostic when selected from the Test Input screen.
[Ctrl H]	Deletes a character when you are entering text in an Input Field.
[Ctrl L] [Ctrl R]	Shifts the view of a large window to the Left or Right.

6–3–4 Connect the VT220 or PC to the LOGIQ™ 700

1. Turn off power to the VT220 terminal or personal computer (PC).
2. Connect a null modem cable (or diagnostic PC cable) to the COM1 port of the VT220 terminal or PC.
3. Connect the other end of the null modem/diagnostic PC cable to the SERVICE port on the bulkhead of the LOGIQ™ 700.
4. At the PC, start the correctly configured (see page 6–13) VT220 terminal emulation software. You should see its status on the PC screen as 'Connected' with the LOGIQ™ 700.
5. If the system is off, power on the LOGIQ™ 700.

During power up what the host is doing is reported on the screen of the diagnostic PC and summarized on the softkey display. Whenever the system detects an error, a message appears in reverse video near the bottom of the PC window and is added to the error log. (See page 6–29.) When the system is booted as far as it can go, you may start diagnostics.

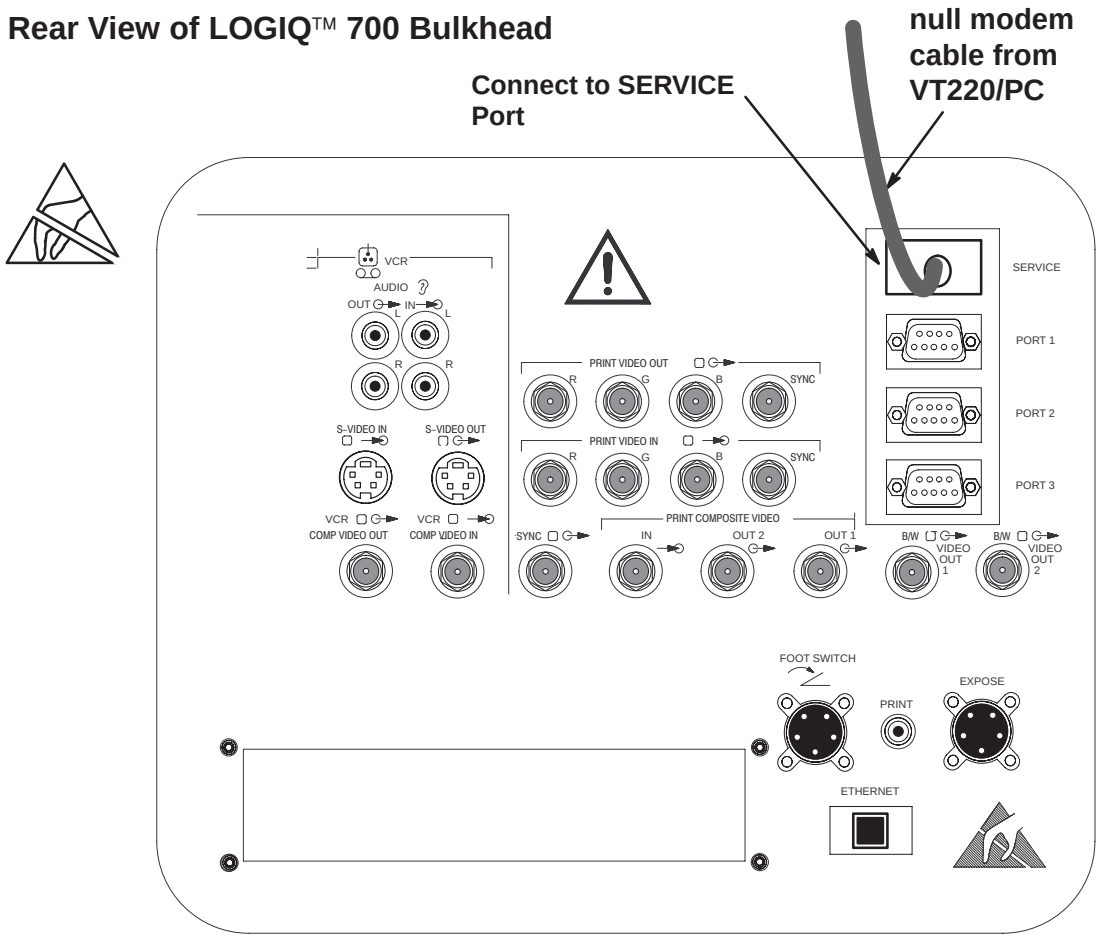

VT220/PC CONNECTION TO LOGIC™ 700 BULKHEAD
ILLUSTRATION 6–14

6–3–5 Startup the gemsC Diagnostics Software

1 . Inspect the MOD disk for loose hardware or label which could jam inside the drive. It must also be write enabled (hole closed) to work. If it appears good, insert the “Service Key” disk into the LOGIQ™ 700 MOD drive.

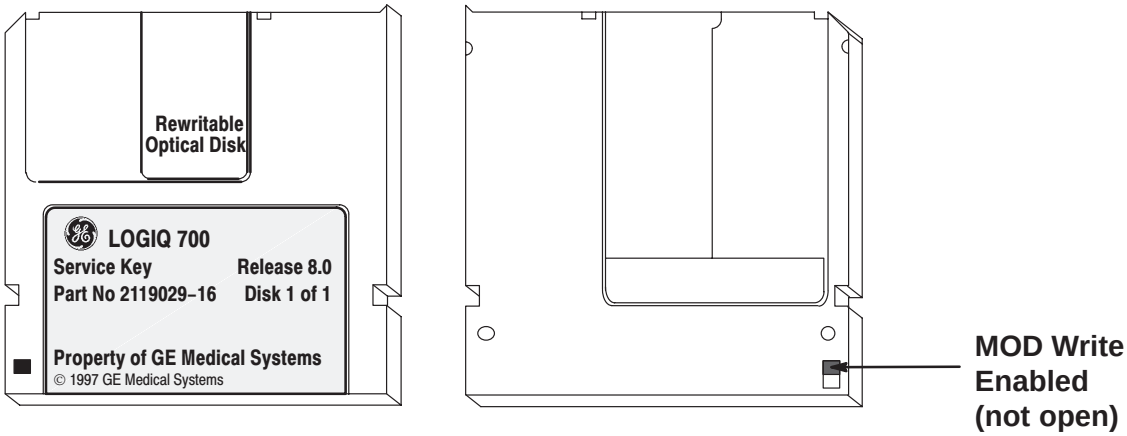

2 . Then on the diagnostic PC,
type: **[Enter] gemsC [Enter]**

Note

The letters “gemsC” do not appear; this is normal. If nothing happens within 5 seconds, retype **gemsC [Enter]** making sure it is typed in the correct case. Check that Caps Lock is off. Check that the Basic Service Key MOD disk is inserted and write enabled. Watch the system monitor for any messages. Remove the disk when it is ejected.

3 . When the UNAUTHORIZED USE PROHIBITED SCREEN appears to warn that this software is for the use of customers only, press **[Esc] [Esc]** to continue.

4 . After the diagnostic interface appears on the terminal, the menu bar selection **Diagnostics** will be highlighted. Press **[Enter]** to start. **Wait 30 seconds.**

Note

Be patient. DO NOT hit **[Enter]** twice. This would buffer an EXIT command.

5 . With the focus on EXIT, press **[F3]** to move the focus to the Diagnostic list box.

6–3–5 Startup the gemsC Diagnostics Software (Continued)

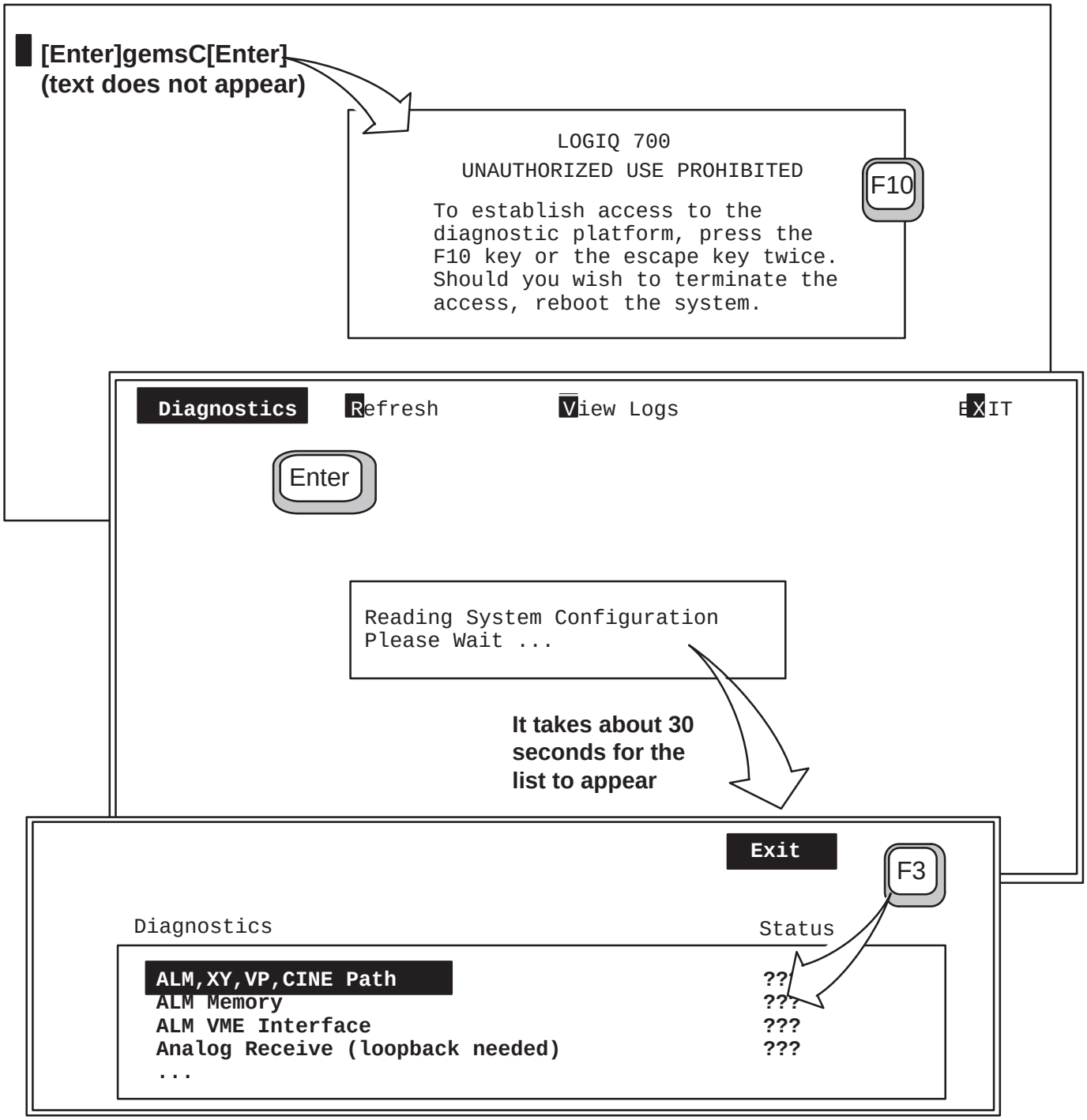

ACCESS SCREENS FOR gemsC DIAGNOSTICS
ILLUSTRATION 6–15

6–3–6 Description of Menu Bar of gemsC Top Level Screen

Description. When the program focus (black highlight) is on the Top Menu Bar of the gemsC top level screen, the menu selections summarized on this page are available.

Note that items in the 700 service menu bar can be used without losing the applications mode. However, selecting Diagnostics in the menu bar puts the machine into Disruptive service mode where only a proper exit permits the system to return to applications.

- **Diagnostics.** Press **[D]** or highlight and press **[Enter]**. The Diagnostics choice interrupts the Applications mode and displays the screen that enables selection and running of the diagnostic tests. Pressing **[Enter]** when this choice is highlighted causes the screen to change to the second level, the Execute level.
- **Refresh.** Press **[R]** or highlight and press **[Enter]**. Redraws the screen.
- **View Logs.** Press **[V]** or highlight and press **[Enter]**. Selecting this choice causes a popup menu for selecting important system files to appear. See page 6–28.
- **Exit**. Press **[X]** or highlight and press **[Enter]**. Pressing **[X]** or pressing **[Enter]** when this choice is highlighted and the entire Menu Bar is present causes a popup menu for selecting exit to appear. If only EXIT is visible, pressing **[Enter]** when this choice is highlighted will present the entire Top Menu Bar.

Navigation. To move the focus from the Diagnostic or Category box, then from the second level menu bar to the top level menu, press **[Esc][Esc]**.
To move the highlight within the menu bar, use the LEFT and RIGHT arrows .
To use the selection it abbreviates, type the letter in black.

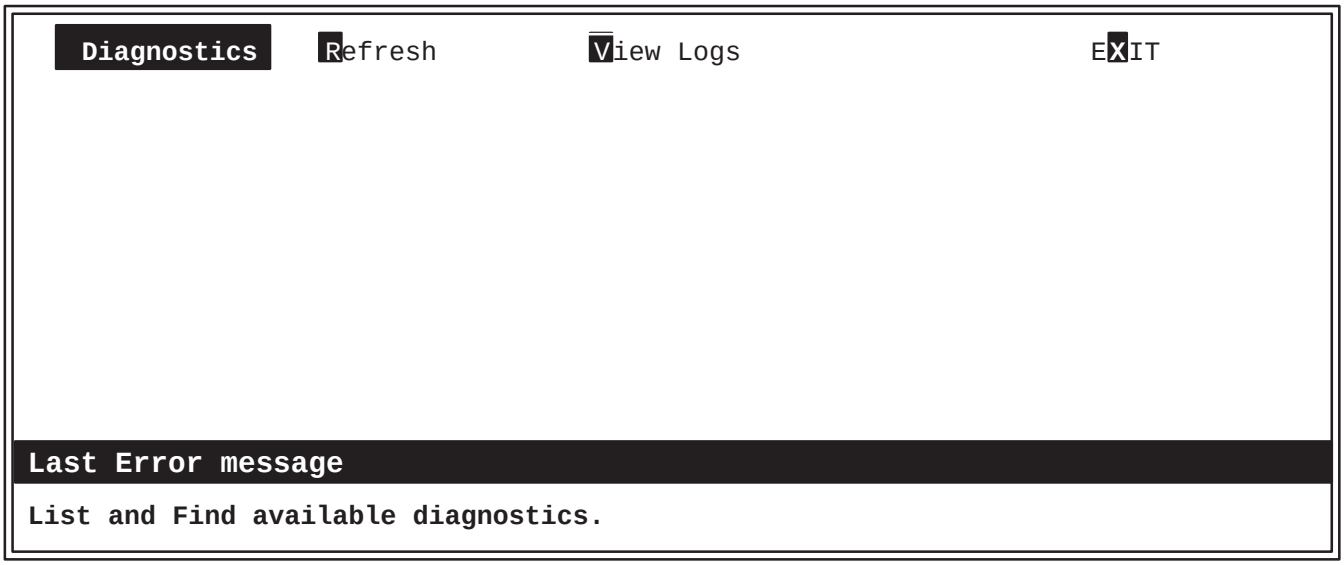

LOGIQ™ 700 gemsC TOP LEVEL SCREEN
ILLUSTRATION 6–16

6–3–7 Description of gemsC Diagnostics Screen

The Diagnostic screen consists of a menu bar, a line that describes the system disk path, a two column box, and a bottom line of information. The '**[D]**' means the software is in Disruptive (to applications) Mode.

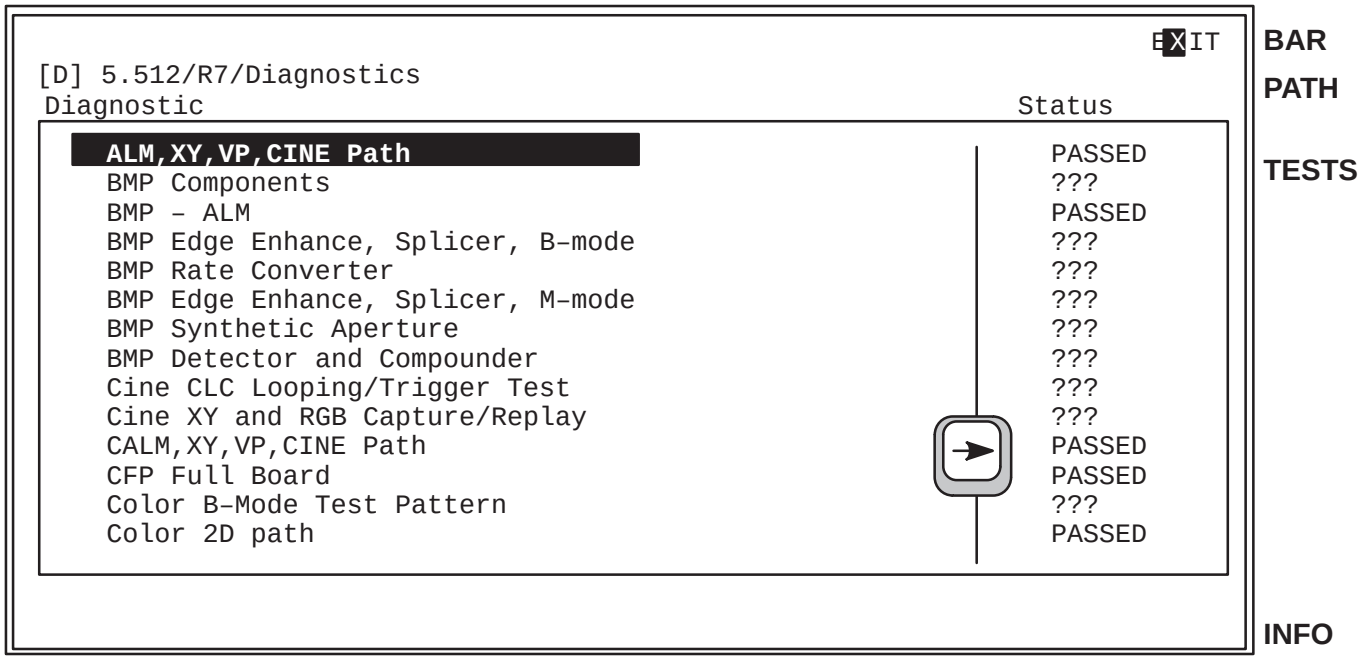

LOGIQ™ 700 gemsC DIAGNOSTIC SCREEN
ILLUSTRATION 6–17

- **Menu Bar (labeled BAR)**. The menu bar for the diagnostic screen lists the actions that can performed. To use a function in the menu bar, press the function's highlighted letter, or use an arrow to highlight the function and then press **[Enter]**.
- **Path Line (labeled PATH).** The path line lists the path to the current directory on the hard drive.
- **DIAGNOSTIC/ STATUS Box (labeled TESTS).** The left column (**Diagnostic**) of the box lists the tests available in the selected category, the current directory on the system disk. The right column (**Status**) displays the test results: **PASSED**, **FAILED** or **ABORTED**. Question marks (???) are displayed in this column if the diagnostic has not been run.

  Pressing the LEFT or RIGHT arrow moves the selection from column to column. Pressing the UP or DOWN arrow moves the selection from row–to–row (test–to–test) within the box. Pressing **[Esc] [Esc]** moves the focus (highlighting) back to the menu bar.
- **Capture Log.** The Capture Log contains the most recent test results for one particular test. View the Capture Log after each test by highlighting the PASSED, ABORTED or FAILED text in the status box and pressing **[Enter]**.
- **Status Line (labeled INFO).** The system reports definitions and test status at the bottom of the screen .
- **Attention or Error.** This line near the bottom of the screen is in reverse video to display and flag the errors noted by the system and logged to the Error Log.

6–3–8 Test Input Choices

Description. For many diagnostics, the test starts automatically. Some however allow selection and control over certain aspects of the diagnostic.

When you start a diagnostic with choices, the system presents a Test Input screen. Each test parameter and the parameter's default selection are listed. Not all Test Input windows look exactly like the example below. Each screen is unique for a configurable test. However navigation remains the same.

```
                                                          EXIT
[D] 5.512/R6.2/Diagnostics
Test Input :                          0) List File

  Executing test file:
  5.512/diagExecute/CalmXyVp.X
  On Apr 07, 1997, at 11:10

        Executing "5.512/diagExecute/CalmXyVp.X" @ 0116F714

Cursor keys scroll, <ENTER> selects and <ESC><ESC> exits choice menu
```

TEST INPUT SCREEN FOR gemsC DIAGNOSTICS
ILLUSTRATION 6–18

Making Test Input Choices. To use the List File: Press **[Enter]** when the prompt 'List File' appears. To run all the subtests with default selections press **[Enter]** again when the specific file is displayed.

To select choices other than the default selections:

- Use the DOWN or UP arrow key to highlight a different choice.
- Use **[F2]** to see all the choices available for the highlighted parameter.
- Use **[Enter]** to select the highlighted choice.
- Type '**y**' or '**n**' or the first three letters of your choice to select as appropriate.
- Use **[Esc][Esc]** to escape/close a popup.
- Use **[Ctrl A]** to abort the test now. You cannot abort a test after it starts. The only thing you can do is recycle power on the unit.
- Use **[Enter]** when you reach the last parameter or **[F10]** to start the test.

6–3–9 Looping Subtests

Description. When a choice made is not to run the List File or not to run all subtests, a Looping prompt appears. This prompt provides the option of running the selected subtest(s) more than once.

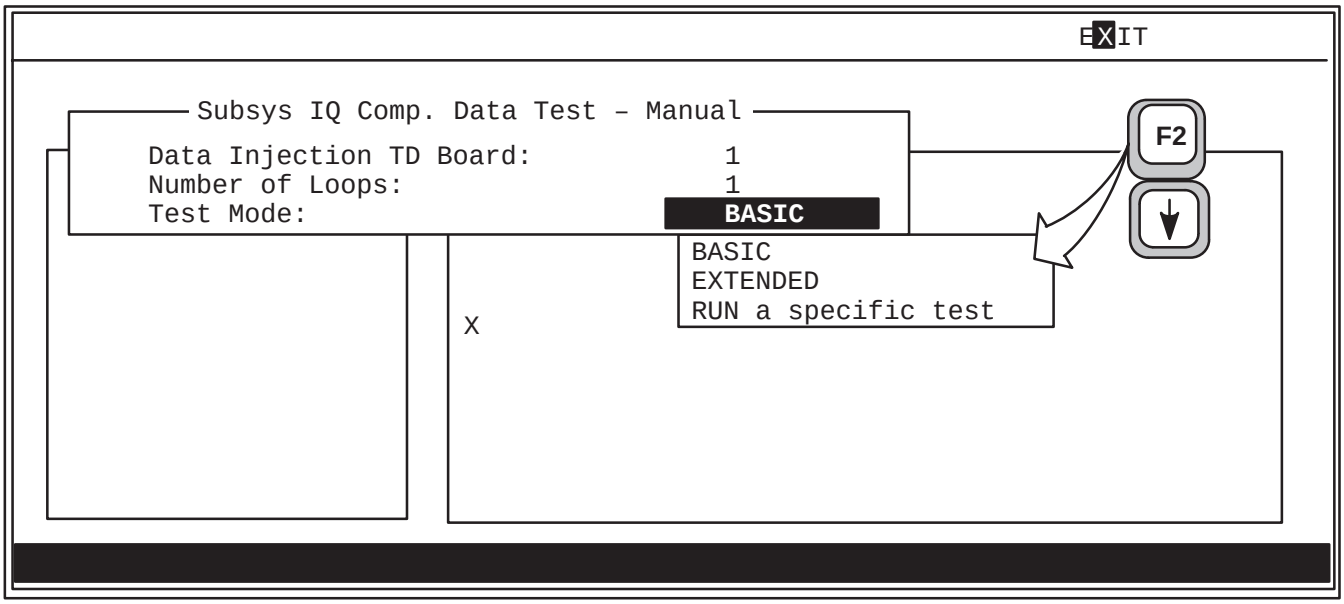

LOOPING SUBTEST PROMPT SCREEN FOR gemsC DIAGNOSTICS
ILLUSTRATION 6–19

Behavior on Failure Choice. If a choice is made to loop more than once, a menu appears to allow choices of how to proceed if the diagnostic fails in one of the loops. The diagnostic will not pause or exit until all the tests have been run in that loop.

- Exit diagnostic after the loop ends
- Continue looping
- Pause to allow operator choice

Capture Log. The Capture Log normally repeats the informational messages seen while the diagnostic is running. However, if the diagnostic loops, the Capture Log is not generated until all testing is through, and then only failures are reported to save time and disk space.

If a loop or subtest fails, the entire diagnostic is considered to have failed. In the case of a catastrophic error, the diagnostic will abort and cease operations after notifying the user. Highlight the word under the STATUS column and press **[Enter]** to see the capture log and the details of a failed or aborted test.

6–3–10 Running Diagnostic Tests

Starting a Test. To start a test, proceed as follows:

1. Press **[Enter]** to run the highlighted test. If a prompt appears after you select a test, additional steps are required. Press **[Enter]** to select the current selection.
2. Press **[F2]** to see what other choices exist. Use arrows to highlight another choice. If a Test Input: Parameter File prompt appears, use the DOWN arrow to highlight the LIST FILE. Press **[Enter]** to select.
3. Press **[F10]** to accept current inputs and start the test.

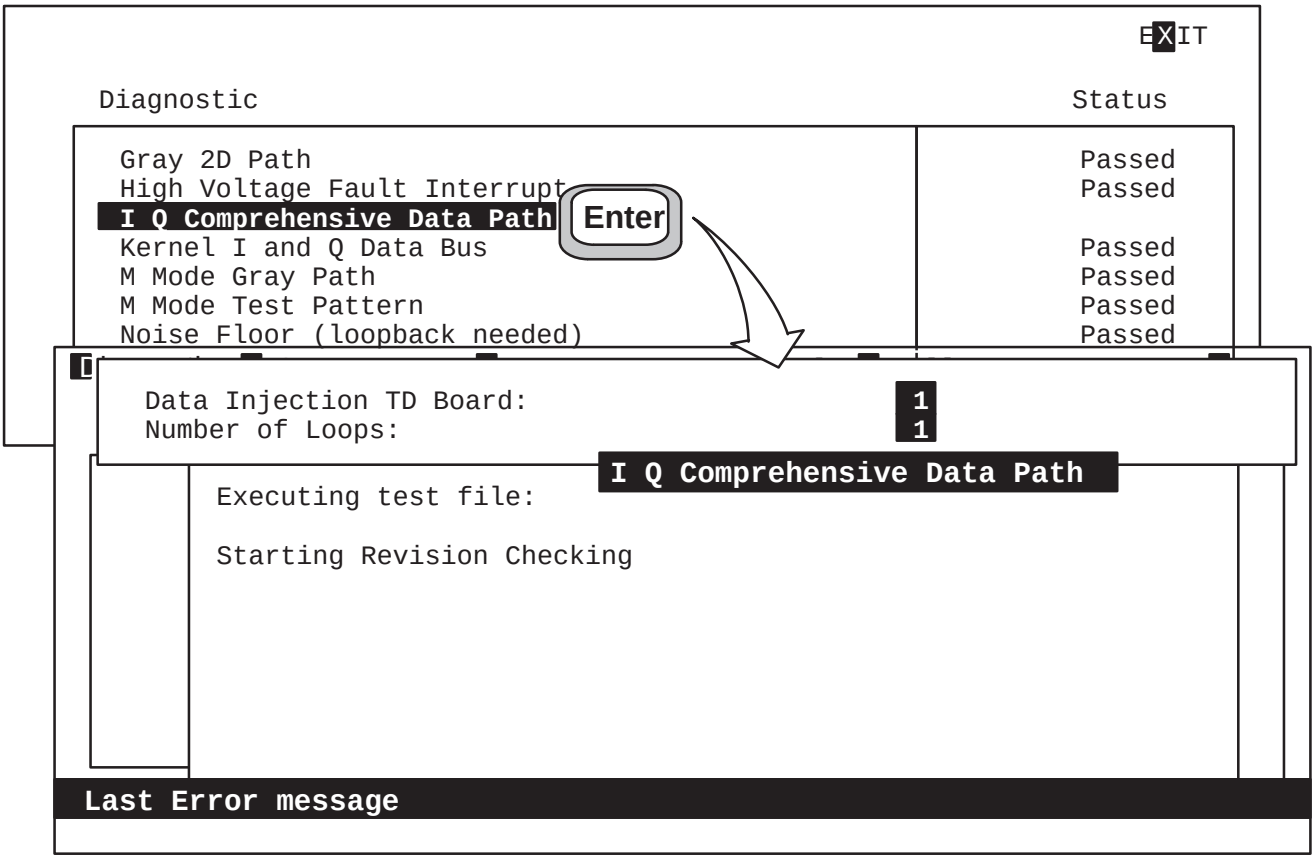

SELECTING AND STARTING A DIAGNOSTIC TEST
ILLUSTRATION 6–20

System Status During Test. While a test is running, information appears listing what is currently being tested and what has passed or failed for that particular test. Informative messages appear as normal text along the bottom of the screen. **Messages meant to flag an error appear in reverse video a few lines from the bottom.**

Test Hung? If the status window shows no activity or MALLOC Errors, the system may be hung. Note how long the diagnostic normally takes. Also, look at the LOGIQ™ 700 monitor for an image the test needs reviewed by the user and provide appropriate PASS/FAIL response.

Test Completed. After any test completes, the message: "`Hit any key to continue`" appears.

6–3–11 Viewing Diagnostic Test Results

Note

Review the Capture Log before rerunning a test. The results, held only for the last run of a test, are date and time stamped for ease of reference.

Displaying the Capture Log. After a test is over, use the right [→] arrow key to highlight STATUS. Use the UP and DOWN arrows to select which test results you want to see. Press **[Enter]** to open the **Capture Log** for that test.

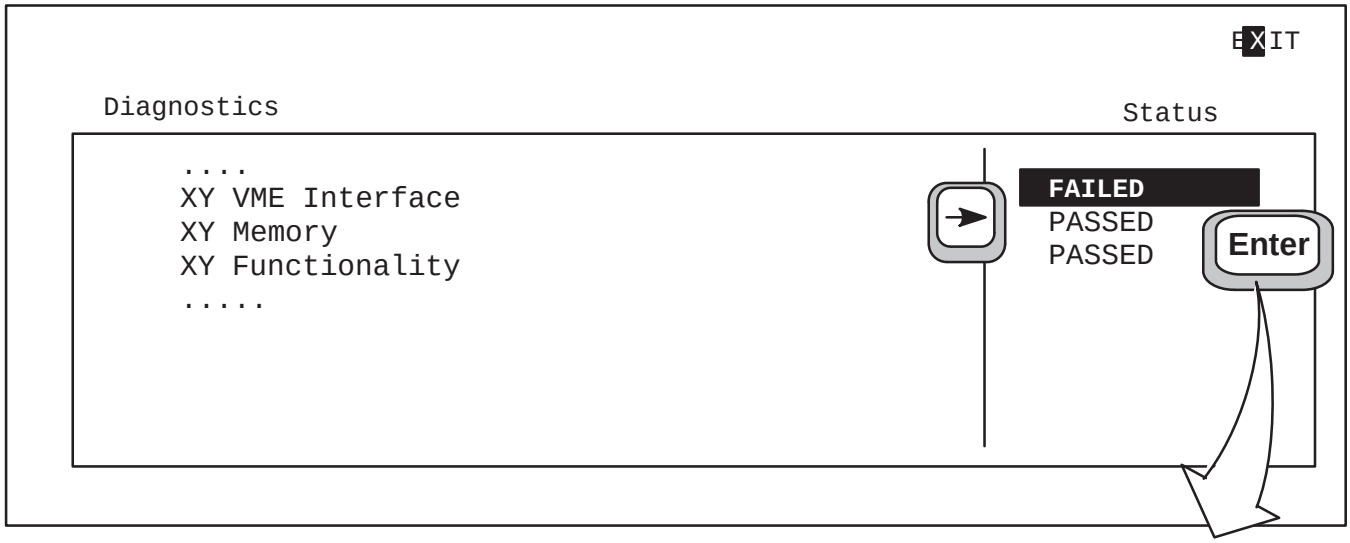

SELECTING A CAPTURE LOG FOR DISPLAY
ILLUSTRATION 6–21

Browsing Selected Capture Log. To move through the Capture Log text, use the arrow keys, **[Pg Up]** or **[Pg Dn]**, **[Home] [End]**, **[Ctl+L]** , **[Ctl+R]** .
To close the Capture File Window, press **[Esc][Esc]**.
Use arrows to highlight another capture file or test file.
Use **[Esc][Esc]** again to move focus to the menu bar. Repeat to go to top level.

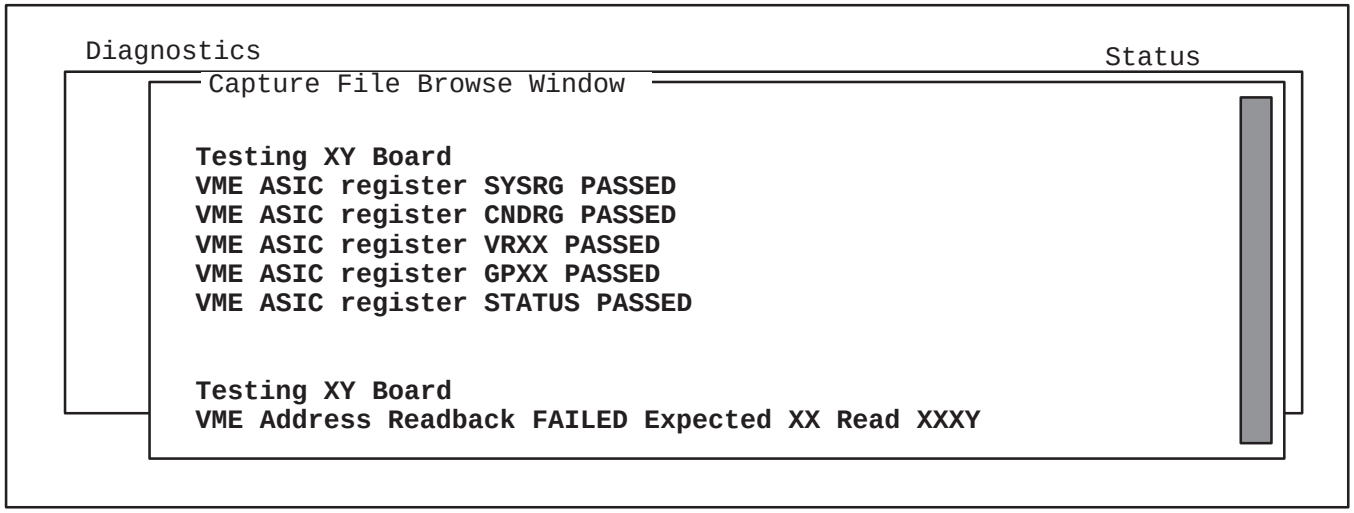

CAPTURE LOG EXAMPLE
ILLUSTRATION 6–22

6–3–12 Exiting Diagnostics

Description. Diagnostic software runs in Disruptive Mode. The control panel will not respond while in diagnostics to assure that diagnostic and application parameters remain separate. In order for the system to correctly return to application parameters, this EXIT procedure below must be completed. If not, there is a risk the unit will hang or remain in Diagnostic mode.

Note

Leave the diagnostic terminal or modem connected and powered until you or the remote engineer use the diagnostic EXIT. If the diagnostic device becomes disconnected, the host will reboot the system if it can and return it to application mode. However, the Diagnostic (code I) mode may still be active. Press [code] [I] on operator panel to disable the Diagnostic mode. The operator cannot enter new patient until this is done.

Procedure. Exit the gemsC diagnostics as follows:

1 . To EXIT, press **[Esc][Esc]** to send focus to EXIT on the menu bar.

2 . Press **[Enter]**. The other menu bar choices appear.

3 . Press **[x]** or use arrow to highlight the Exit choice and press [Enter].

4 . *If you are through* with diagnostics and want to return the LOGIQ™ 700 to applications mode, press **[1]** or use arrow to highlight **1) Diag System Reboot**.

5 . Press **[Enter]** to implement your choice.
(Use **[Esc][Esc]** if you change your mind and do not want to exit diagnostics.)

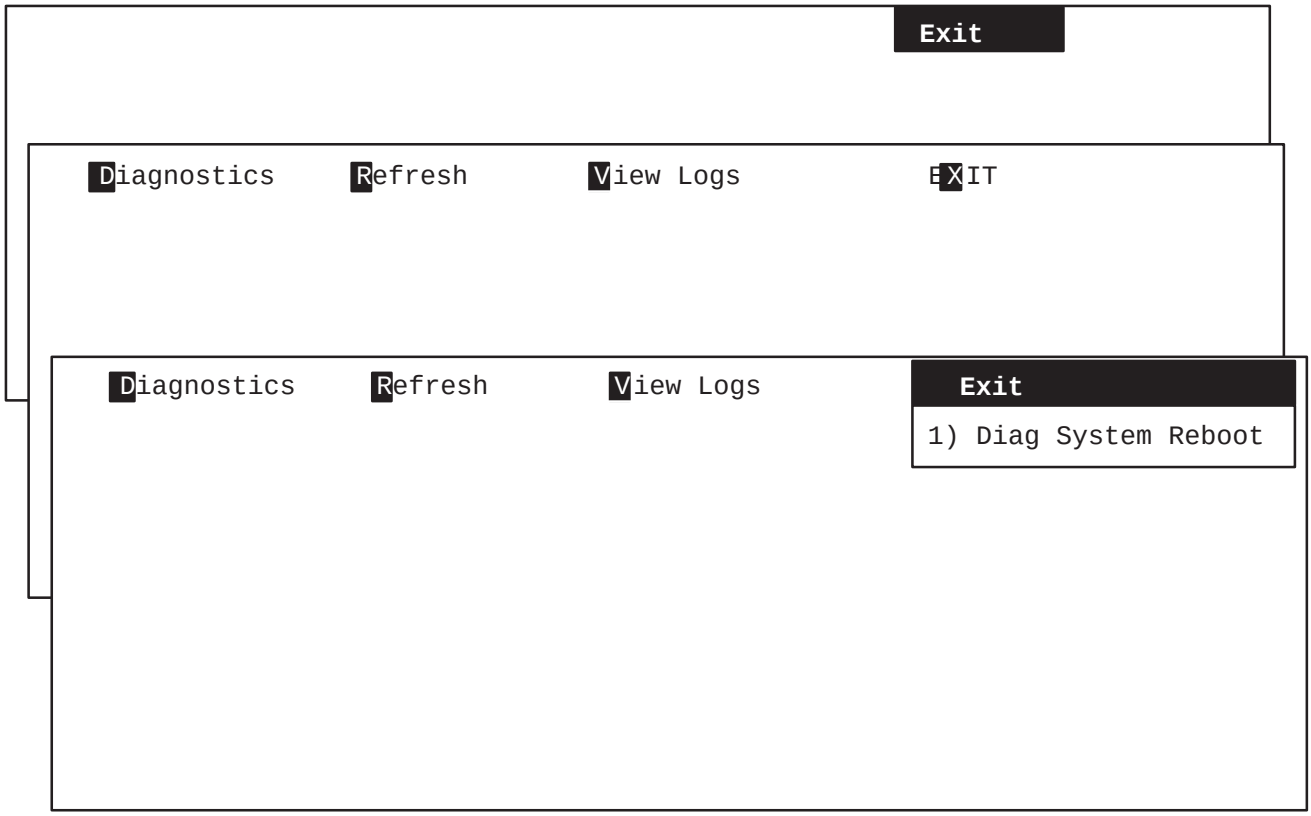

SCREENS FOR EXITING gemsC DIAGNOSTICS
ILLUSTRATION 6–23

6–3–13 Loopback

Description. The loopback connector is a hardware tool used with the beamformer diagnostic software in place of a probe. The loopback thus enables testing of the beamforming and probe control functions without having to use a probe that may be faulty.

The loopback can help determine whether TD channels, RF cables, XDIF slots may be bad. The loopback can also help determine if the power and control signals are reaching the probe. If all signals are reaching the probe connector, and the system passes with the loopback and fails on the same XDIF slot with a probe, that probe is probably bad.

Note

When setting up a test involving the Loopback, be sure to correctly identify the XDIF slot to be used. Since the loopback will not be lifted, the system cannot automatically identify and activate the correct slot.

Loopback Functions. The loopback:

- Helps evaluate the beamformer's RF capabilities
- Tests host to probe control: allows readback of LOGIQ™ 700's system identification signals, SYS(1:0), allows testing of the console's switch hook circuitry, allows testing of the probe ID receiving circuitry, allows measurement of the voltages (5VPA, HVP, 12VPA, and 15VNA) available at the probe connector when any PTY line is grounded (probe or loopback is attached), allows testing of the probe temperature receiving circuitry, allows readback of probe commutator state data, STA(8:0), and simulates the probe commutator BSY* bit
- Provides a BNC 50 Ω BNC connector that can be used to inject test signals into the TD channels or to monitor TD channel output

6–4 VIEW LOGS

6–4–1 Available Log Choices

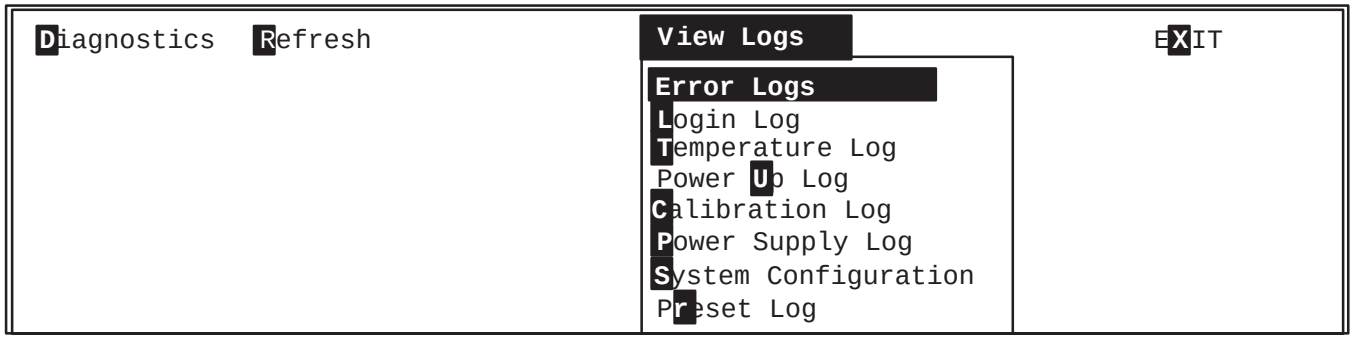

VIEW LOGS DROPDOWN MENU FOR gemsC
ILLUSTRATION 6–24

Error Logs – Provides two options for displaying a history of system errors:

- **Error Log –** Displays the most recent 10,000 system errors stored on the system hard drive since the software was installed. . Press **[Pg Up]** to see older entries. The oldest errors are deleted from the hard drive if the file gets too big.
- **Error Log Window –** Displays the system errors stored since the last time the machine was powered up. Highlight **Error Log Window** and **[Enter]** or press **[W]** to view this log.

Login Log – Press **[L]** to see report of what and when diagnostic accesses were made through the SERVICE port since the last time software was installed.

Temperature Log – Press **[T]** to see active endo probe and unit temperatures as collected by the probe thermistor and unit sensors and calculated by the EQ board.

Power Up Log – Press **[U]** to see messages from the most recent power up cycle. To view the messages of the software installation, **[Esc][Esc]** the latest Log; you will see Log #00 listed. Enter this and press **[Home]** to go to the very first screen.

Calibration Log – Displays details of the Calibration Diagnostic; no longer required.

Power Supply Log – Press **[P]** to list the system power levels recorded whenever at least one output fell out of specifications limits or changed by more than 0.9 Volts from the last reading.

System Configuration – Press **[S]** to have host read the InSite EEPROM of all major circuit boards.

Preset Log – Press **[R]** to create and view a list of the current system presets. This includes the exam presets for the current application and active probe, general system presets, local and remote peripheral setup, and last value for these system parameters: Color Map ID, Color Power Map ID, Doppler Audio Volume, Simultaneous Select on/off, M/DOP Cursor, and Current Exam Category.

6–4–2 Error Log or Error Window

Error Log versus Error Window. The Error Log contains all system errors since the equipment had software installed. The errors appear with the most recent ones shown first. The oldest errors are deleted from the hard drive when the file gets too big. In contrast, the Error Window displays only those errors added since the last time the machine was powered ON.

Error Log versus Capture Log. The **Error Log** is different from the **Capture Log** which you can see after running a diagnostic by using the arrow to move the highlight to the STATUS box. The error log can only be accessed from the top menu bar; it has all system failures listed, but not diagnostic failures nor details of a particular test.

Viewing the Error Log or Error Window. The error log file or window is selected from the top menu bar.
To put the highlight in the menu bar, press **[Esc][Esc]**.
To backup to the top level menu (from Execute to Diagnostics), use **[Esc][Esc]**.
Type **[V]** , or use arrow, until **View Logs** is highlighted (use arrow), press **[Enter]** and the View Log menu pops open.
Use the arrows to highlight the desired log; press **[Enter]** to view the desired log.

About10 to 15 seconds are required for the Error Log to appear. The end of the log, the most recent entries, are placed into view. Press **[Pg Up]** to see older errors.

Navigation. To scroll through a Log Browse Window,, use the arrow keys, **[Pg Up]** or **[Pg Dn]**, **[Home] [End] [Ctrl L] [Ctrl R]** or the scroll bar.
To close a Log , press **[Esc][Esc]**.

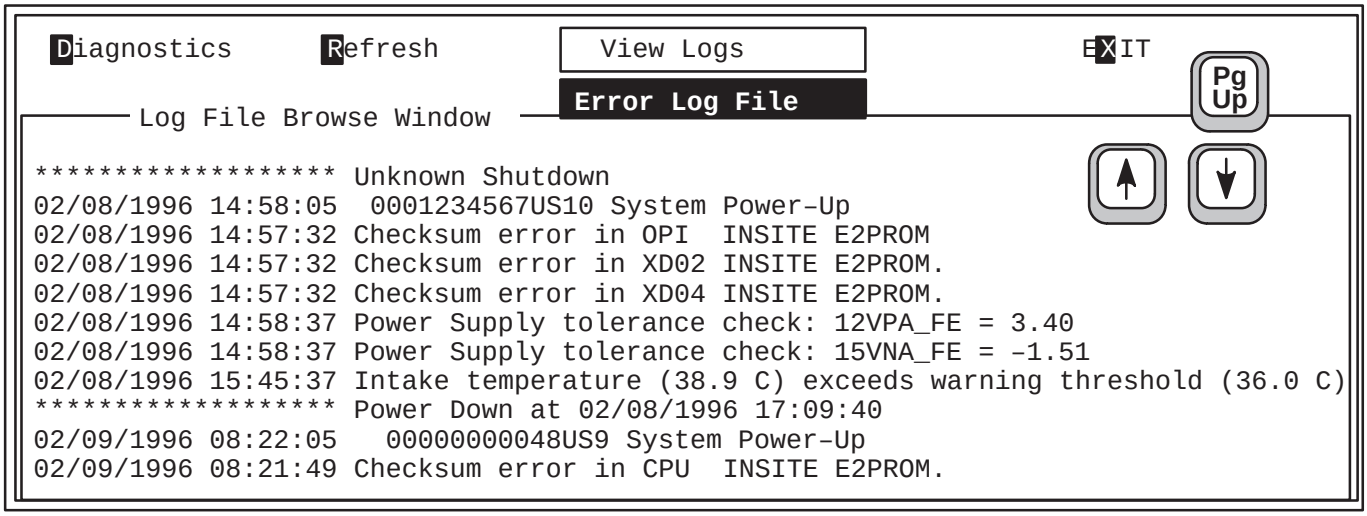

ERROR LOG FILE SCREEN
ILLUSTRATION 6–25

6–4–3 Temperature Log

Temperature Monitoring. The host regularly queries the IIC bus while the unit is ON and updates the temperature log entries every half hour, at least once per power up session, and anytime there is a 1–degree change in a temperature. There are up to three temperature sensors within the unit plus a temperature sensor within an endocavitary probe. The sensor voltages are translated to degrees C by the EQ. Normal range is 15 to 30.

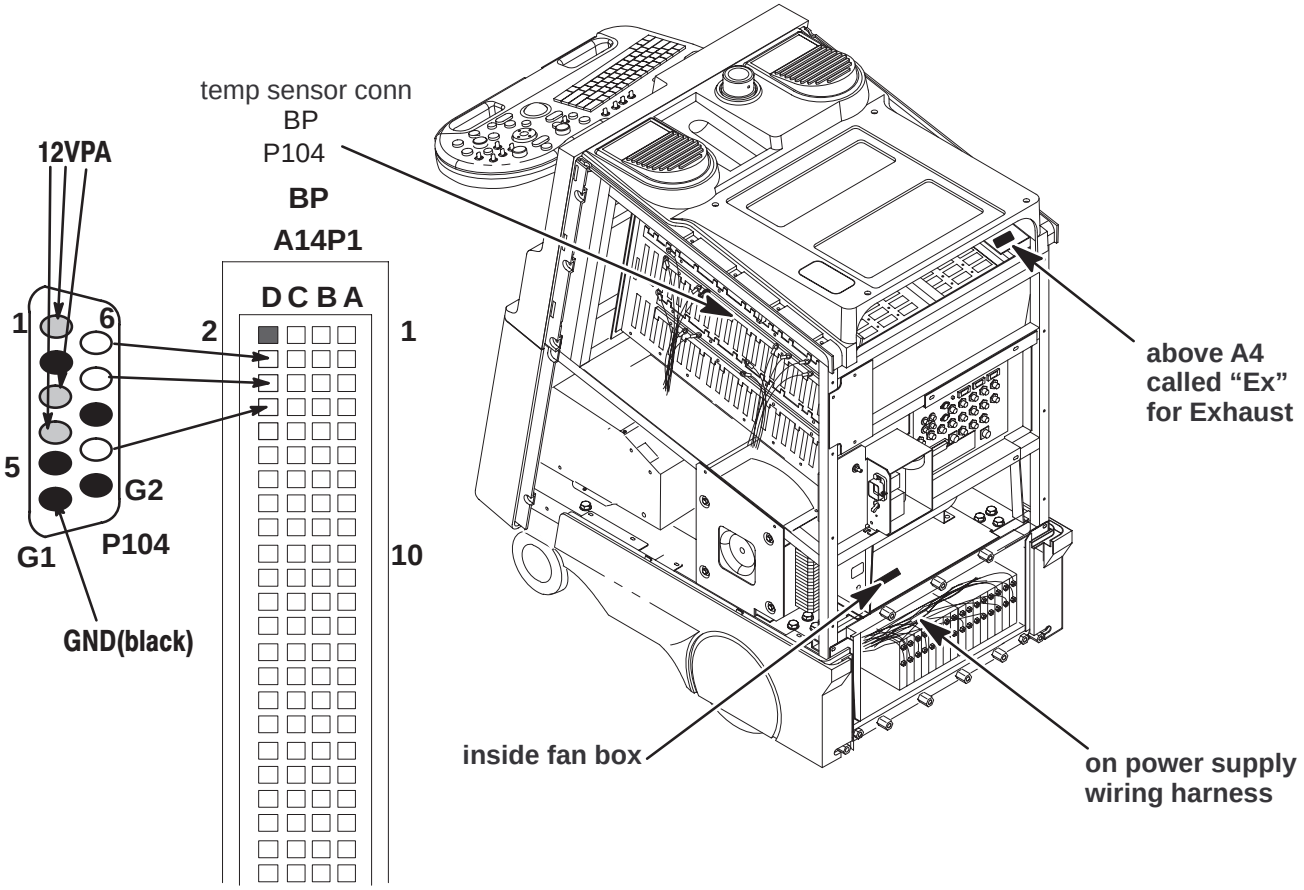

PHYSICAL LOCATION OF TEMPERATURE SENSORS WITHIN UNIT
ILLUSTRATION 6–26

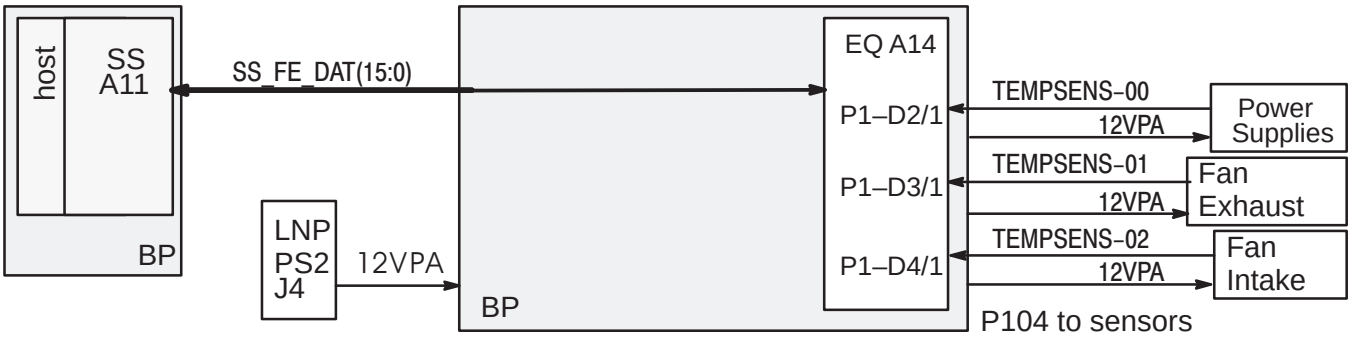

BLOCK DIAGRAM OF TEMPERATURE SENSING CIRCUITS
ILLUSTRATION 6–27

6–4–3 Temperature Log (Continued)

```
04/30/1997 08:57  Probe=N/A , Ps=–1.7, Ex=–1.7, In=–1.7
04/30/1997 09:09  Probe=N/A , Ps=–1.7, Ex=–1.7, In=–1.7

04/30/1995 18:03  Probe=23.3, Ps=32.5, Ex=32.8, In=24.9
05/02/1995 10:00  Probe=23.0, Ps=32.8, Ex=33.4, In=25.2
05/02/1995 16:03  Probe=N/A , Ps=32.5, Ex=32.8, In=25.2
05/02/1995 17:14  Probe=N/A , Ps=29.7, Ex=29.1, In=24.9
```

TEMPERATURE LOG EXAMPLE
ILLUSTRATION 6–28

Temperature Reporting. The host monitors the unit sensors every 15 minutes and an active endocavitary probe every 15 seconds. The non–endocavitary probe temperature is ‘N/A.’ The Temperature Log is amended every half hour or whenever any temperature changes by 1 degree C or more.

Warning messages are sent to the monitor if INTAKE temperature or the difference between INTAKE and EXHAUST is too large. See table 6–5.

Sensor Failure. If a unit temperature sensor does not work or its readings are not within 2 and 80 degrees C, the system places one error message in the Error Log per software boot and stops monitoring that sensor and its related delta(s). Repair such a condition as soon as possible. If the sensor never worked, try swapping the sensor wires. The sensors use 12VPA_FE.

System Halt w/o Message. The power supplies also have their own turn off mechanism if they get too hot; if for some reason the system temperature monitoring system fails, the system halts when the power supplies turn off without any warning messages.

TABLE 6–5
TEMPERATURE RELATED MESSAGES

Temperature C	System Interpretation/Response	Possible Cause
41 or higher	HOT PROBE: HOST DISABLES 618E PROBE	hot probe or electrical fault
76.2	EQ CANNOT CALCULATE UNIT TEMPERATURES	power out of spec 12VPA_FE
–1.7	EQ HAS NO VOLTAGE READING FROM SENSOR	path to sensor is open
60	POWER SUPPLY WARNING TO ERROR LOG	sensor buried under wires, dirty power supply filters
55	EXHAUST WARNING TO ERROR LOG	not all covers are in place, sensor too close to rear cvr
36	INTAKE WARNING TO ERROR LOG	ROOM TOO HOT; sensor mounted on metal; main air filter DIRTY
41	**INTAKE TOO HOT: MESSAGE TO OPERATOR**	
Δ 21 or more	DELTA–1 WARNING EXHAUST–INTAKE (ambient) **UNIT TOO HOT: MESSAGE TO OPERATOR**	not all covers are in place; unit backed against wall, main air filter dirty
Δ 21 or more	DELTA–3 WARNING POWER SUPPLY–INTAKE	not all covers are in place

6–4–4 Power Up Log

The Power Up Log records the host's bootup progress in the form of messages. (See example that starts below.) The messages can act as clues to a power on/bootup problem. When a system hangs during bootup, either the process described in the last message or the process that follows is likely to be the step that the host could not complete.

Installing software cleans the hard drive and begins new Log files. To keep these files at a manageable size they are divided when they reach a certain size. The first Power Up Log (#00) holds the power on and bootup that includes the software installation messages. The default selection for the Power Up Log is the log for the most recent Power Up. To select another Power Up Log, press **Esc Esc**.

Software installation includes the option of a low level format of the hard drive. Reformatting will add 20 to 40 minutes to the installation process.

```
pSOSystem V2.2.2
Copyright (c) 1991 – 1997, Integrated Systems, Inc.
_____________________________________________________________
START–UP MODE:
  Run the Sphinx BSP Version 0
NETWORK INTERFACE PARAMETERS:
  IP address on LAN is 3.28.124.135
  LAN interface's subnet mask is 0xfffffc00
  Shared memory interface is disabled
  IP address of default gateway to other networks is 3.28.124.254
MULTIPROCESSING PARAMETERS:
  This board is currently configured as a single processor system
HARDWARE PARAMETERS:
  Serial channels will use a baud rate of 38400
  This board's memory will reside at 0x10000000 on the VME bus
  This board's Ethernet hardware address is 8:0:3E:29:2E:5D
  LAN will use the 10BaseT interface
2600/761–GENESIS 2 BOARD CONFIGURATION: 222–A
  Processor Type :: MPC750
  Internal Clock Rate 267 Mhz
  External Clock Rate 67 Mhz
  DRAM Size :: 128 Mega Bytes
  PCI Bus Clock Rate 33 Mhz
  PCI LAN Controller   DEC 21140 Ethernet LANCE
  PCI VMEbus Interface PRESENT
  PCI SCSI Controller  PRESENT
  COM3/COM4 Controller PRESENT
SPHINX BSP VERSION 0 PARAMETERS:
  This machine is in BOOT mode
  Hostname of this unit is mvme67
  Name of the executable file on disk is shex/root_hex.x
  IP address of NFS host to obtain software from is 3.28.124.3
  Name of the NFS mount point  is /home/isle2
```

Power Up Log – (Continued)

```
Name of the NFS default path is /home/isle2/mvme
 The AC wall frequency is 60Hz
 The Board Number is G222939301D
 After board is reset, start–up code will wait 1 seconds
```

```
To change any of this, press any key within 1 seconds

Application Level BSP Driver initialized...
Initializing DMA driver.. Done.
Pseudo device initialized...

                    LOGIQ 700 Ultrasound
                 General Electric Medical Systems
                 Board Support Version 8.04 Flash
                       G 2229393– 01–D
                    04/15/1999  08:46:52
                IP: 3.28.124.135 Name: ”mvme67”

Initializing SCSI driver... Done.
The following SCSI devices were found...
 Hard    Drive          ID 0 Vendor: SEAGATE  Model: ST34573N
 MOD     Drive          ID 1 Vendor: FUJITSU  Model: M2513–MCC3064SS
 Host/MC                ID 7
Probing SCSI Bus for Optical Memory Volume...  Not Found.
Probing SCSI Bus for Direct Access  Volume...  Partitioned Drive Found at 5.0.
Mounting Direct Access Partition Number 2...  Mount at 5.768.
Checking File System on pHILE+ Volume ”5.768”
            Please be patient... Verify complete.  No errors
Mounting Direct Access Partition Number 1...  Mount at 5.512.
Checking File System on pHILE+ Volume ”5.512”
            Please be patient... Verify complete.  No errors
Mounting Direct Access Partition Number 0...  Mount at 5.256.
Checking File System on pHILE+ Volume ”5.256”
            Please be patient... Verify complete.  No errors

Boot Device found.  Boot Device is ”5.256”
Loading Software:
  ”5.256/shex/root_hex.x”...Please be patient. 4.096337 seconds.
Starting Application...
Setting Application Code ($029F5000–$02F96000) Write Protected.
B0Looking for SS Board ... FOUND
Looking for VP Board ... FOUND
Looking for XY Board ... FOUND
Looking for ALM_CT Board ... FOUND
```

models identified here yours may differ

Power Up Log – (Continued)

```
Looking for TLM Board ... FOUND
Looking for CALM_CT Board ... FOUND
Looking for CINE Board ... FOUND
Looking for BMP Board ... FOUND
Looking for DP Board ... FOUND
Looking for CFP Board ... FOUND
Looking for PIA Board ... FOUND
Checking System Type ... SINGLE CARDRACK
Probing for Beamformer boards...
Looking for FECT Board ... FOUND
Looking for VEQ Board ... FOUND
Performing Config Mgr init ... done
Beamformer initilization beginning.
Looking for TD Board 7 ... FOUND
Looking for TD Board 6 ... FOUND
Looking for TD Board 5 ... FOUND
Looking for TD Board 4 ... FOUND
Looking for TD Board 3 ... FOUND
Looking for TD Board 2 ... FOUND
Looking for TD Board 1 ... FOUND
Looking for TD Board 0 ... FOUND
Number of TD Boards Found = 8
Beamformer initialization complete
going into calm_init
going into bm_init
going into dp_init
going into dp_actm_init
going into sc_xy_init
going into cf_init
going into pnl_init
going into cine_init
leaving sys_init
Setup sys params..................... Done
```

R8.0.F.3 at Apr 13 1999 18:57:59 **Last item reported is Software Rev and Creation time**

6–4–5 System Configuration Log

Note

After running disruptive tests, the System Configuration software may be unable to correctly read EEPROMs. If READ errors occur here, exit diagnostics, regain access to gemsC, then 'View' the Configuration Log BEFORE you enter the 'Diagnostics' menu bar choice.

Description. There are five pages to this log:
Log Page 1: General Information
Log Page 2: FRU Model and Serial Numbers
Log Page 3: TD board A/D hardware parameters and TD cable type
Log Page 4: Probe Model and Serial Numbers
Log Page 5: System Model and Serial Numbers (stored on backplane)

The System Configuration Log is the place to find data about the system software and hardware. The log holds model and serial numbers of all major parts and Service information. Part and serial numbers are burned into Electrically Erasable and Programmable Read Only Memory (EEPROM) on the Field Replaceable Unit (FRU) at the factory. There are other fields to be seen also. The MC queries the circuit boards' IIC EEPROM whenever you start the system or diagnostic software, or request the Configuration Log.

Bad Data. The Log reports the numbers as BAD if they don't conform to an expected format. Part Numbers come in two formats: the traditional '46–' and the new 'G ' for Global Item Master that starts at 2 million. Part Number can also mean Model Number. A Bar Code reports a part's serial number. **Look at the FRU's labeling and bar code for the actual data.**

Key Elements. MC, VMEbus, SS, FECT, EQ (FE controller), VP (BE controller), and an InSite EEPROM on each major circuit board and probe are the hardware parts that enable system configuration checking.

Accessing the System Configuration Log. To access the System Configuration Log you must be at the top level Diagnostic menu bar. See page 6–19. Use **[Esc][Esc]** to get there from the diagnostics.
Press **V** to open VIEW LOGS.
Press **S** to open the System Configuration Log.

Navigation. Press **[F10]** to go to the next page and save your entries. Some other navigation rules:

- Use **[TAB]** or arrows to highlight other editable fields on the current page.
- Use **[Pg Up] [Pg Dn]** or arrows to view other parts of current window.
- To modify the highlighted field, press **[Enter]**, choose correct format, type new information, tab to next field, enter data, press **[F10]** to accept and close current window.
- Use **[Esc] [Esc]** to close a window without making changes.

6–4–5 System Configuration Log (Continued)

PAGE 1: System Configuration Log – General Information

```
CUSTOMER:               ST LUKES HOSPITAL
SYSTEM ID:              1234567890
SYSTEM SERIAL NO:       1234567US1
SW INSTALL DATE:        Jul 10 1997 09:29:54
APPS SW VERSION:        R7
BSP SW VERSION:         2.5 (6.2 DISK)
CALIBRATION DATE:       00/00/00
REPORT DATE:            97/06/18
REPORT TIME:            14:08:25
FREQUENCY:              NTSC
No Message
```

GE CARES ID
Taken from backplane EEPROM

Board Support Package Host firmware

Use GENERAL SYS PRESETS Video Format to change
If a message was entered, “Message” will appear.
To view, highlight and press [Enter]. To close, press [F10].

The MESSAGE field on the first page is very large. The SVR field for circuit boards is 64 characters long; the ANN field is five lines long.

PAGE 2: System Configuration Log – FRUs

LOCN The LOCN field reports the location of the circuit board that holds the EEPROM. See area designators in the Parts Chapter.

A1 are front end Card Cage boards

B1 are back end Card Cage boards

C1A01 reports the Control Panel OPI/CPU board, C1A02 the entire assembly

D1 represents the XDIF; it is used to describe probe locations

FRU The Field Replaceable Unit field reports the abbreviation of the FRU name.

Part Number The FRU Part (model) Number is silkscreened on a circuit board and entered/burned into the board’s EEPROM. Software can read this data to identify the correct diagnostic and application parameters. The part number is either a ‘46–’ or 2 million number.

RV The Revision field reports the circuit board’s Assembly version/revision.

F The Fab field reports the board’s Fabrication Artwork revision.

POH The Power On Hours field may report the ‘age’ of the FRU.

BARCODE The Bar Code on a part contains its serial number.

DOM Date of Manufacture (YR/MN/DY) is when the board’s EEPROM was first tested and encoded at the factory.

SVR The Service field is 64 characters long.

ANN The Annotation field is five lines long. This field should be used to document failure information on defective boards when returned for repair.

STATUS The Status field reports what the host sees.

RD FAIL The STATUS message ‘RD FAIL’ means the EEPROM that holds the data could not be read.

6–4–5 System Configuration Log (Continued)

Note

The OPI/CPU, XDIF and MC Renewal Part Numbers differ from the numbers shown here because the Renewal Parts are a higher assembly than the circuit boards.

FRU Information :

LOCN	FRU	PART NUM	RV	F	BARCOD	P.O.H	D.O.M.	STATUS
A1A00	BP	G 2222028–01	B			960	00/00/00	PRESENT
A1A14	EQ	G 2218099–02	C	0	BEBKAC	2032	12/25/95	PRESENT
A1A15	FECT	46–288610G01	J	1	BEA2BR	2953	95/04/11	PRESENT
A1A16	TD07	G 2175619–02	A		BEC3Y2	432	00/00/00	PRESENT
A1A17	TD06	G 2175619–02	B	0	BEC9Y1	360	96/11/11	PRESENT
A1A18	TD05	G 2175619–02	A			1657	00/00/00	PRESENT
A1A19	TD04	G 2175619–02	B	0	BEC3XV	408	97/01/01	PRESENT
A1A20	TD03	G 2175619–02	0	B	BEBR7U	1705	00/00/00	PRESENT
A1A21	TD02	G 2175619–02	B	0	BEC3Y0	2352	96/09/13	PRESENT
A1A22	TD01	G 2175619–02	B	0	BEBY17	2424	96/09/09	PRESENT
A1A23	TD00	G 2175619–02	B	0	BEBY18	2424	96/09/09	PRESENT
B1A01	VP	G 2129508–04	C	0	BEC07G	84	96/09/19	PRESENT
B1A02	XY	G 2154803–01	A	0	BEA05F	2929	95/01/19	PRESENT
B1A03	CINE	G 2120499–04	D	0	BECA4J	84	98/12/02	PRESENT
B1A04	TLM	G 2155157–01	A	0	BECJ3B	84	98/01/10	PRESENT
B1A05	CALM	46–288616G03	G	0	BECKR4	84	98/01/30	PRESENT
B1A06	ALM	46–288622G02	E	0	BECMVE	84	98/01/22	PRESENT
B1A08	DP	G 2128879–01	A	0	BECKJT	84	96/12/18	PRESENT
B1A09	CFP	46–288654G07	D	1	BECL5N	84	99/02/06	PRESENT
B1A10	BMP	G 2129404–00	F	2	BECL49	84	99/01/24	PRESENT
B1A11	SS	G 2155787–00	H	2	BECHL1	84	99/01/05	PRESENT
B1A12	PIA	G 2127536–00	E	1	BECL7M	84	99/02/07	PRESENT
B1A13	MC		E	1		84	99/02/07	PRESENT
D1A01	XDIF	G 2143719–01	A	0	BEC9U0	84	97/02/10	PRESENT
C1A01	CPU	46–288680G02	C	1	BP02E3	84	97/01/28	PRESENT
C1A02	OPI	46–312042G03			BPO2JJ	84	97/02/21	PRESENT

EXAMPLE OF PAGE 2 OF SYSTEM CONFIGURATION LOG
ILLUSTRATION 6–29

Use **[Tab]** or arrows to highlight specific fields on this FRU list; use **[Enter]** to select; use **[Pg Up] [Pg Dn]** or arrows to view other parts of current window; use **[F10]** to go to the next page.

ATTENTION **The C1 entries represent the OPI/CPU board and the entire control panel. The C1A01 information comes from the barcode for the OPI/CPU board and the Control Panel Assembly data comes from the Rating plate on the left hand side of its casting.**

6–4–5 System Configuration Log (Continued)

PAGE 3: System Configuration Log –TD A/D and TD cable TYPE

This page reports TD parameters. The technology for Analog to Digital Conversion is evolving; this screen will reflect future TD changes.

Note

The system may require different numbers than the ones shown here.

FRU	O/P	TYPE	DELAY	FRU	O/P	TYPE	DELAY
TD00	2	2	50	TD01	2	2	50
TD02	2	2	50	TD03	2	2	50
TD04	2	2	50	TD05	2	2	50
TD06	2	2	50	TD07	2	2	50

TD CABLE TYPE CODE: 1

Note

If the Calibration Diagnostic aborts and reports an error in the FE Config Tool, check the XDIF, TD part numbers, A/D type, and cable type. These units must be accurately known to software in order to create correct values for beamforming. The Cable Type number is stored in the backplane EEPROM. The A/D parameters are stored on the TD boards.

6–4–5 System Configuration Log (Continued)

PAGE 4: System Configuration Log – PROBES

This page reports what the host reads and basically indicates whether or not the FE IIC functions and probe EEPROM are working.

EEPROM. LOGIQ™ 700 probes feature an on board EEPROM for storage of probe ID, manufacturing and calibration data. The EEPROM, located in the probe's connector, holds the data needed to compensate for nonuniformity in transducer response and is also used to store manufacturing data.

Calibration Probe Calibration is accomplished at the factory by storing data about the probe element's gain and phase variation. This information enables system calibration to correct for probe performance degradation that can occur as the probe ages.

LOCN	FRU	PART NUMBER	RV	ID	LOT	DOC	DOM	SERIAL NUMBER	STATUS
D1J01	XD01	G 2103927–01	1	c4	001	95/07/05	95/07/05	27347YS8	BAD CHK
D1J02	XD02	G 2105671–01	1	88	001	96/10/17	96/10/17	19968TS7	PRESENT
D1J03	XD03	46–312621G01	1	c8	001	96/04/24	96/04/24	10MK0	PRESENT
D1J04	XD04	G 2113569–01	1	89	001	96/02/28	96/02/28	31167VP0	PRESENT

LOCN. The probe on D1J01 is the one on the left; D1J04 is the one on the right.

DOC. Date of Calibration is the date read from the EEPROM that the probe was last calibrated at the factory.

DOM. Date of Manufacture (YR/MN/DY) is when the probe's EEPROM was encoded at the factory.

SERIAL NUMBER. The Serial Number reported may identify the pallet and not the entire probe assembly. The SN may show ?? if the data does not match expected form due to a manufacturing process change. YS indicates the probe was made in Japan; TS means the probe was made in France; MK is for Milwaukee.

STATUS. The STATUS message of 'MISSING' or 'BAD CHK' means the probe's EEPROM data is not readable. The probe may have to be returned for repair to enable the host to read that probe's EEPROM. System software uses generic data.

Probe	Hex	Decimal	Frequencies	Elements	Depths(in cm)
227s	4e	78	2.5 – 3.75	96	8 – 24
348c	89	137	2.5 – 3.75	128	8 – 24
548c	84	132 (r1 or 2)	3.75 – 6.25	192	8 – 20
618c	88	136	5.0 – 6.25	128	5 – 12
M3c	09	9	2.5 – 5/D2.5 – 3.75	128 x 7	
618e	87	135	5.0 – 6.25	128	5 – 10
546L	c9	201	3.75 – 5.0	192	4 – 12
739L	c7	199	6.25 – 8.75	192	3 – 9
M12L	0a	10	6 – 14/D6.25 – 7.5	192 x 5	
LA39	c8	200	10 – 12.5	192	3 – 6
M7C	0b	11	3.3 –6.88/D3.75	192 x 5	
3Sr	96	150	1.5 –3.5	64	24
8S	4f	79	5 – 9	96	12
i12L	fa	250	6 – 11	96	5
loopbk	7f	127			

6–4–5 System Configuration Log (Continued)

PAGE 5: System Configuration Log – Entire Unit

In addition to its own FRU part number and bar code and service details, the backplane also holds the **unit's** model and serial numbers and statistics. The system **PART NUMBER should show the Model and Serial Number as reported on the unit's Rating Plate near the AC inlet.**

Note

The SYSTEM PART (MODEL) NUMBER and SERIAL NUMBER for the BP entry must match on the System Page.

An example only

LOCN	FRU	PART NUMBER	SERIAL NUMBER	POH	DOM	ANN	STATUS
A1A00	BP	G 2222028–01	01234567890US1	270	99/03/07	N	PRESENT

6–5 DIAGNOSTIC DESCRIPTIONS

6–5–1 Diagnostic Tests

Test Name	Test Purpose	FRUs under test
ALM Components	Tests ALM hardware and functions. The ALM VME Interface and ALM Memory must work in order for this diagnostic to work. The initialization subtest can be run separately to verify that all of the ALM diagnostic registers are accessible before running the ALM Memory and VME diagnostics. This is done by selecting NO for the first ALL? menu and NO for each subtest in the second menu.	Req. – MC, FECT, ALM Tests: ALM Time: 20 sec ***Set BMODE CINE ACQUISITION in Presets to 1X Normal first***
ALM Memory	Tests the ALM's VME data bus, address bus, and memory cells; tests ALM ability to store and retrieve data. This standard VME memory test verifies ALM operation of its memory and LUTs. LUTs hold setup parameters that must be loaded depending on the current scan mode.	Req. – MC, SS, ALM, FECT Tests: ALM Time: 15 sec
ALM VME Interface	Checks that the board is in the correct slot, tests ALM's VME I/F ASIC and InSite EEPROM which holds information about that board, and checks ALM VME Address and Data paths to and from the Master Controller.	Req. – MC, SS, ALM, FECT Tests: ALM Time: 5 sec
ALM,XY,VP,CINE Path	Verifies the B mode data path from the ALM to CINE board. Use the List File: Press [F2] when the system prompts for an input, then arrow down until List File is highlighted. Press [Enter] and [Enter] again when the specific file is displayed.	Req.– MC, FECT, ALM, CALM, VP, CINE Tests: ALM, XY, VP, CINE Time: 1 min
Analog Receive **(Loopback needed)**	Verifies operation of analog receive chain from XDIF slot through RF cables onto the TD boards. Pulses one transmit channel at 5 Mhz and listens on appropriate receive channels. Data is collected by the FECT. Does not test any other frequency but 5 Mhz. Enter 3, 2, 1 or 0 for whichever XDIF connector has the loopback. Press [F10] to use the default test parameters, use [F2] to adjust parameters. If half the channels fail, select another offset: the transmit channel used for part of the test is bad.	Req. – MC, SS, FECT, EQ, XDIF, Loopback, cables Tests: TD boards, RF cables, XDIF Time: 50 sec/XDIF slot
B–Mode Test Pattern	Displays two test images, one at a time, a sector and a parallelogram that vary from dark gray at the top to white at the bottom **as a quick visual tool to see if B–Mode is operating in the Back End.** Use the List File: Press **[F2]** when the system prompts you for input, then arrow down until List File is highlighted. Press **[Enter]** and **[Enter]** again when the specific file is displayed.	Tests: SS, BMP, ALM, XY, VP, monitor Time: 2 min, operator dependent, the system waits until you PASS or FAIL the pattern

6–5–1 Diagnostic Tests (Continued)

BMP – ALM Interface	Verifies the Back End B mode (BMP) processing, output and interface to the ALM. Configures the boards in a standard run–time mode, puts TPG data on the BE I&Q bus, the BMP passes these vectors to the ALM. The vector is read from the ALM's line memory and compared to the BMP's B–Mode output memory gold file.	Req. – MC, SS, FECT, BMP, ALM, PS's Tests: BMP, ALM, signal paths Time: 30 sec
BMP Components	Tests the various hardware BMP blocks and checks the I/Q data path from the SS through each block of the BMP by injecting an appropriate data pattern from the TPG and comparing the result to an expected output file. **BMP Synthetic Aperture** **BMP Detector & Compounder** **BMP3 Rate Converter** **BMP EE, Splicer, B Mode Output** **BMP EE, Splicer, M Mode Output** Use the List File for each subtest: Press **[F2]** when the system prompts for for input, then arrow down until List File is highlighted. Press **[Enter]** and **[Enter]** again when the specific file is displayed.	Req. – MC, SS, FECT, BMP Tests: BMP Time: 2 min. **50 sec** **120 sec** **105 sec** **90 sec** **40 sec**
BMP Memory	Verifies access to all banks of BMP memory. Software runs standard VME memory test on each BMP memory bank, writes to one location in each bank, verifies the lower–order addresses and checks that the memory banks are independently addressable (cross bank).	Req.– MC, FECT, BMP Tests: BMP, BP Time: 10 sec
BMP VME Interface	Checks that the board is in the correct slot, tests BMP VME I/F ASIC and InSite EEPROM which holds information about the BMP and checks BMP VME Address and Data paths to and from the MC.	Req.– MC, FECT, BMP Tests – BMP, BP Time: 5 sec

6–5–1 Diagnostic Tests (Continued)

Calibration **See page 6–55**	**NOTE:** The only time the system requires any type of calibration (DC offset calibration) is when a TD board was moved/replaced or system software was reloaded. Otherwise, calibration is only for testing the unit. Measures gain and phase errors that the TD boards, cables and XDIF path create. The first channel (064) of the second half is pulsed to measure the receive channels for the selected TDs in first half (channels 000 to 063). The first or selected OFFSET channel of the first selected TD is pulsed to measure the channels for the selected TDs in the second half (channels 64 to 127). **NOTE:** A loopback isn't required to be installed on the unit when running DC offset calibration for TD board changes or software reloads, but *Calibrate Gain and Phase* and *Tx On for Gain for Gain and Phase* subtests must be turned off using the F2 key prior to running the calibration. Enter what XDIF connector has the loopback. Press **[F10]** to accept and run with current parameters. Use **[F2]** to see other parameter choices. Change Offset when many channels fail; the channel used as a tool is probably bad. This will use another channel for the transmit tool.	Req.– entire system, loopback Tests: Front End Time: 5 min/probe slot to collect data
CALM,XY,VP,CINE Path	Verifies the Color B mode data path from the CALM to VP using the CINE board. Use the List File: Press **[F2]** when the system prompts you for input, then arrow down until List File is highlighted. Press **[Enter]** and **[Enter]** again when the specific file is displayed.	Req.– MC, FECT, ALM, CALM, VP, CINE Tests: CALM, XY, VP Time: 2 min
CALM VME Interface	Checks that the CALM is in the correct slot, the CALM VME I/F ASIC and InSite EEPROM which holds information about the CALM, and the CALM VME Address and Data paths to and from the MC.	Req. – MC, SS, FECT, CALM Tests: CALM Time: 5 sec
CALM Memory	Executes a standard VME memory test that checks CALM memory components.	Req. – MC, SS, FECT, CALM Tests: CALM Time: 15 sec
CALM Components	Tests CALM hardware including CALM registers, Beam Receiving, Coordinate Transformation, Spatial Interpolation, and Acoustic Frame Ready interrupt generation. The MC must communicate with and store data on the CALM, meaning the CALM VME I/F and Memory tests must pass for this test to work.	Req. – MC, FECT, CALM Tests: CALM Time: 20 sec

6–5–1 Diagnostic Tests (Continued)

CFP–CALM Interface	Verifies the color velocity and variance data connection from the CFP's B–mode output test registers to the CALM at slow speed. The test moves known values onto the CFP output bus and collects them on the CALM. Failures are detected and reported. This test is useful for finding interface problems on the backplane or with the buffer hardware. This test will not find timing problems because the output bus is driven slowly.	Req.– MC, FECT, SS, CFP, CALM Tests – BP, CFP, CALM Time: 5 sec
CFP Full Board	Verifies all CFP operations. Allows selection of all (default) sections of the board or specific sections which are: adaptive, non–adaptive, wall filter, flow estimate, normalizer, autocorrelator, velocity and variance estimator, and power estimate. The TPG on the SS simulates the I&Q input data. The MC configures the CFP to process the data. The MC checks the processed data collected from Corner Turner memory and the output FIFO against a gold standard file for that test. The software tests four rather than one table on the G3 or later CFP board; these LUTs enable enhanced PDI. **Use the List File:** Press **[F2]** when the system prompts you for input, arrow down until List File is highlighted. Press **[Enter]** and **[Enter]** again when the specific file is displayed.	Req.– MC, FECT, CFP Tests – CFP Time: 45 sec
CFP Memory	Verifies the color flow memory via the VME interface to the CFP. There are three tests performed on each memory bank: address bit check, data bit check, cell integrity. At the end, a cross bank check is performed across all memory banks.	Req.– MC, FECT, CFP Tests – CFP Time: 30 sec
CFP VME Interface	Checks that the board is in the correct slot, CFP VME I/F ASIC and InSite EEPROM which holds information about that board, and CFP VME Address and Data paths to and from the MC.	Req.– MC, FECT, CFP Tests – CFP, BP Time: 5 sec
CINE CLC Looping/Trigger **User Interaction req'd** **0 1** **RED** 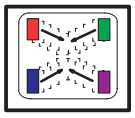 **GRN** **BLU 2 3 PUR**	Checks the CLC logic of the CINE board, whether it can capture and replay multiple frames, and whether it can correctly trigger multiple frames. This is a visual test that you must pass or fail. Press **[Enter]** when the popup appears; there is no List File for this test. To quit, press **[Enter]** once the `Discontinue Testing` prompt appears. Then to grade this test as a PASS, press **[Enter]**. To grade it a FAIL, press **[F2]**, highlight 'FAIL,' and press **[Enter]**.	***Set BMODE CINE ACQUISITION in Presets to 1X Normal*** Req.– MC, FECT, VP, CINE Tests: CINE Time: 30 sec Exception: Each quadrant may momentarily flash white with black dots.

6–5–1 Diagnostic Tests (Continued)

CINE Memory	Checks CINE memory and its access: • Big Frame Memory (BFM) stores image pixel data in XY or RGB format for CINE Loop Controllers (CLCn) • Frame Buffer Memory holds the current display image pixel data in XY or RGB format and is used as a frame grabber to transfer the frozen image to the archive directory via a Preset Print button & VMEbus. If system is preset to MOD, COPY and DELETE are automatic. • Frame List Memory holds a frame pointer list to image data in the BFM for the CINE Loop Controllers (CLCn).	Req.– MC, FECT, CINE Tests: CINE, BP Time: 3 min
CINE VME Interface	Checks that the board is in the correct slot, CINE VME I/F ASIC and InSite EEPROM which holds information about that board, and VME Address and Data paths to and from the MC.	Req.– MC, FECT, CINE Tests: CINE, BP Time: 5 sec
CINE XY and RGB Capture/Replay	Verifies CINE's ability to capture and playback XY and RGB image data, trigger image windows, and control looping. Verifies operation of the XY to VP to CINE data/control paths. Capture: Loads an input file into XY board which the VP processes into RGB or XY output for CINE. Replay: Replays the data loaded into CINE by the Capture portion back into the VP, then to capture that back again in CINE. This test must be done four times to check all four CINE loop controllers. Use the List File: Press **[F2]** when the system prompts for input, then arrow down until List File is highlighted. Press **[Enter]** and **[Enter]** again when the specific file is displayed. As the system tests the CINE Path, an orange, yellow, blue rainbow, swirl combo image is displayed. If test fails, the system backtracks. If the expected results failed at every checked output, then the source, the XY may be bad. If the B Mode and Color B Test Patterns look okay, then CINE may be bad.	Req.– MC, FECT, VP, XY, CINE Tests: XY, VP, CINE Time: 2 min
Color 2D Path	Verifies operation of entire Back End B/CF path from the Mid Processor to CINE memory: SS – CFP – CALM – XY – VP – CINE. Known image data files are injected into this path and the data that comes out at CINE is compared to what is expected. If not the same, the host checks output at previous board until the failure source can be estimated.	Req.– MC, FECT, EQ, SS, CFP, CALM, XY, VP, CINE Tests: CFP, CALM, XY, VP, CINE Time: 1.5 min

6–5–1 Diagnostic Tests (Continued)

Color B–Mode Test Pattern 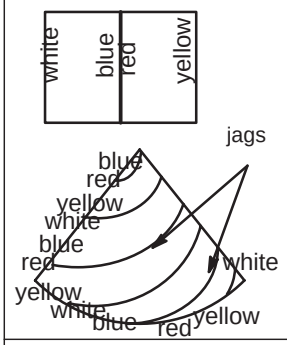 	Displays three images, one at a time, a rectangle that varies from white to blue on the left side and red to yellow green on the right half, a rainbow sector that varies from the top down as the rectangle varied from the left to right, and also a sector with colored swirls, **as a quick visual tool to see if B/CF scan mode works in the Back End.** Press **[F2]** and use List File. Some jaggedness between the blue and red swirl (the third pattern) is normal.	Req.– MC, FECT, EQ, SS, CFP, CALM, XY, VP, monitor Tests: CFP, CALM, XY, VP, monitor Time: 2 min, operator dependent
DICOM Printer Configuration	Enables selection of number of copies, priority, film type and size, destination, format, magnification, smoothing, border, and various densities for DICOM printer 1, 2, 3, or 4 configured in the LOGIQ 700 Network Configuration.	The unit can send images to up to four remote printers for sites with the DICOM Option.
Doppler Audio Tool 1	Exercises the system audio path for Doppler from creation in the DP, thru D/A conversion and filtering in the MC, to output at the speakers and bulkhead VCR Audio OUT. Audio tones should heard during this test.	Req.– FECT, MC, SS, Tests: DP, MC, audio wiring, speakers Time: 50 sec
DP Audio Self Test	Tests the on board audio path including about 20% of the DP. The test downloads executable test code to the Master and Slave DSPs. The DSPs send a clock frequency to the Audio Interface on the DP. The DSP checks the serial to parallel converter. Results are returned to the host via the DP's status register.	Req.– FECT, MC, SS, DP Tests: DP Time: 4.5 min
DP Components	Consists of several individual tests that check different portions of the DP. These tests do not require the PIA except as the probable SERVICE PORT interface. **DP DSP Self Test 5 sec** **DP DSP Memory 5 sec** **DP DSP Communications 5 sec** **DP Control Register 5 sec** **DP Host Communications 5 sec** **DP DSP–Host Communications 5 sec** **DP Output Self Test 5 sec**	Req.– MC, SS, FECT, EQ, DP Tests: DP Time: 35 sec
DP I/Q Self Test	Checks the I/Q path on the DP. Verifies the Sum And Dump block works in all modes. Because the SS and the EQ RxSYNC are not needed, this test may be helpful in deducing whether the SS or EQ may be bad should this diagnostic pass and a timeline image problem still exists. **PRACTICE ESD PREVENTION!**	Req.– MC, FECT, DP Tests: DP

6–5–1 Diagnostic Tests (Continued)

DP–TLM Interface	Tests portion of the Back End PW doppler data path that lies between the DP and TLM boards.	Req.– MC, FECT, SS, DP, TLM Tests – DP, BP, TLM Time: 10 sec
DP VME Interface	Checks that the board is in the correct slot, DP VME I/F ASIC and InSite EEPROM which holds information about that board, and DP VME Address and Data paths to and from the MC.	Req.– MC, FECT, DP Tests: DP, BP Time: 5 sec
EQ Ports and Memory	Checks host's ability to communicate and store data on the EQ. Checks EQ registers and memory needed to perform TGC (focal zones and TD amp), vector parameter decoding, TD pulser power, I & Q processing, probe muxing, and FE status. Does not determine how well the EQ processes, I&Q data, the I&Q Comprehensive Tests do. 'Probe Control' and 'XDIF Wrapback' test how the EQ performs probe related functions.	Req.– MC, SS, FECT, EQ, XDIF, Tests: EQ Time: 1 min Press **[F10]** to accept and run with the default parameters.
Front End Control of TD boards	Tests host access and control of the TDs. The path is a long one from the MC to SS to interconnect cable to FECT to the TDs via numerous access and broadcast modes. Press **[F10]** to accept and run with the default parameters.	Req. – MC, SS, FECT, TDs Tests: FECT, TDs, Time: 4 min
FECT Memory and Register	Checks the four Look Up Tables, on board address lines, and write/read registers on the FECT.	Req.– MC, SS, FECT Tests: FECT Time: 30 sec
Gray 2D Path	Verifies Back End functionality on a single frame of gray 2D data from the BMP to VP. Two patterns are used: sector and linear; CINE is used as a tool. Injects simulated I&Q data from the SS into the BMP which is processed then scan converted by the ALM and XY, held/displayed by CINE and VP.	Req.– MC, SS, BMP, ALM, XY, VP, FECT, EQ, monitor Tests: BMP, ALM, XY, VP, monitor Time: 6 min
High Voltage Fault Interrupts	Verifies whether all TDs can detect and generate a HV FAULT signal should the TD draw too much power. This test checks the TD to FECT interface to SS to host path, but not the EQ.	Req.– MC, SS, FECT, all TDs, cables Tests: all TDs, FECT, CPU control cable, SS Time: 2 min.

6–5–1 Diagnostic Tests (Continued)

I Q Comprehensive Data Path Use Auto mode unless you need to run Extended or specific tests.	Checks full speed operation of the entire I&Q data path from the first TD to the BMP. Checks board to board Left and Right Pipe summing done by the TDs; emphasis is on the I&Q processing done by the EQ. To perform the longer test, select Manual and use **[F2]** to change Test Mode to Extended. The host varies setup of the Barrel Shifter, Multiplier, NCO and FIR blocks of EQ I/Q processing. Software loads the test data into the first TD and collects the data at the BMP.	Req.– MC, SS, FECT, EQ, All TDs, BMP, CFP, DP, Tests: TDs, EQ, SS, backplane Time: 10 sec (auto) or 15 min (manual)
Kernel I and Q Data Bus	Verifies the I&Q data path from the EQ to the SS to the CFP. Tests the I&Q bus in the Back End. Does not test I&Q bus to the BMP or DP.	Req.– MC, SS, FECT, EQ, CFP Tests: SS, EQ, I and Q bus Time: 10 sec
M Mode Gray Path	Verifies Back End functionality gray M mode data from the BMP to VP. Two patterns are generated; TLM Replay Memory and Cine Memory are used as a tool.	Req.– MC, SS, EQ, Tests: BMP, TLM, VP Time: 90 sec
M–Mode Test Pattern	Displays two test images, one at a time, that vary from gray to white **as a quick visual tool to see if M–Mode is operating in the Back End.** Use the List File: Press **[F2]** when the system prompts you for input, then arrow down until List File is highlighted. Press **[Enter]** and **[Enter]** again when the specific file is displayed. 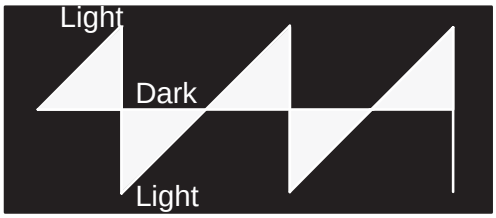	Tests: SS, BMP, TLM, XY, VP, monitor Time: 1 min, operator dependent
Noise Floor **(Loopback needed)** **see page 6–59**	Finds RF channels that consistently perform outside the allowed range. Using noise from the loopback as a signal source, it sets system at maximum gain, collects TD output data, determines the noise floor of the beamformer and which channels are bad. Enter what XDIF connector has the loopback then press **[F10]**.	Req.– entire Front End, kernel, loopback, cables Tests: TD boards, RF cables, XDIF Time: 3.5 min/XDIF connector
PIA VME Interface	Checks that the board is in the correct slot, PIA VME I/F ASIC and InSite EEPROM which holds information about that board, PIA VME Address and Data paths to and from the MC.	Req.– MC, FECT Tests: PIA, BP Time: 5 sec

6–5–1 Diagnostic Tests (Continued)

Probe Control **(Loopback needed)**	Checks hardware and logic responsible for probe control and power. The host accesses the probe through the CPU Control cable, FECT, EQ, probe control cable, and XDIF. Power reaches the probe from PS3 to FE harness to probe power cable to XDIF. Enter what XDIF connector has the loopback, then press **[F10]**. This diagnostic checks: • Power to tested XDIF slot • XDIF logic for Probe ID and activation • EQ probe temperature sensing & XDIF I/F • EQ and XDIF commutation & FE IIC bus3 • High speed path from host to probe slot	Req.– MC, SS, FECT, EQ, XDIF, Loopback, cables Tests: XDIF, EQ, loopback, probe power, XDIF P1 and P2 cables Time: 60 sec/XDIF connector
PW Doppler Path	Verifies Back End processing of the I&Q data for PW doppler imaging. The SS is used to inject simulated I&Q data into the DP. The DP processes and delivers the data to the TLM which converts doppler vectors into pixels and delivers the result to the VP. The CINE board memory is accessed to determine if the end result was as expected. Does not test Doppler Audio.	Req.– MC, FECT, EQ, SS, DP, TLM, VP, CINE Tests: DP, TLM, VP, CINE Time: 50 sec
SS Components	Initializes then tests the SS DSP RAM, DSP internal processes, SS interrupt handling (needs the FECT and EQ for this), DSP timer, the Test Pattern Generator (needs all the boards listed in the Required column for this), and the SS LED's. If '**n**' is entered in response to Run All Tests prompt, highlight and type '**y**' to select the desired tests. Then answer the following prompt for the number of times (loops) to run the desired test(s). Also select how system should handle a failure while looping (default: exit after loop ends). If running more than one loop, only failures are reported to the Capture Log to save time and disk space. Press **[F10]** to acknowledge the LEDs are all working and to pass and end this diagnostic.	Req.– MC, SS, EQ, FECT, DP Tests: SS Time: 1 minute if no failures occur and all tests are run once 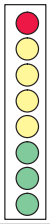
SS Com Port 2	Verifies communication between the DSP on the SS and the MC over the VMEbus. Software executes DSP boot loader function that looks for data at the four VME communications ports. The MC writes data to the DSP through these ports and commands the DSP to return the data back to the communication ports for verification.	Req. – MC, FECT, SS Tests: SS, BP Time: 5 sec.

6–5–1 Diagnostic Tests (Continued)

SS–DP Interface	Tests the I&Q interface from the SS to the DP and the I&Q data paths and Scan Control Bus paths on the BE backplane, plus the Sum&Dump Block and Scan Control Interface on the DP. Doppler test vectors are fired from the SS to the DP; the data is processed and confirmed by the DP's Master DSP.	Req.– MC, SS, DP, FECT, EQ Tests: SS, DP, BP Time: 15 sec
SS Memory	Tests the memory for the diagnostic I&Q Test Pattern Generator and status of the dual port RAM.	Req.– MC, FECT, SS Tests: SS Time: 5 sec
SS VME Interface	Checks that the board is in the correct slot, SS VME I/F ASIC and InSite EEPROM which holds information about that board, and the SS VME Address and Data paths to and from the MC.	Req.– MC, FECT SS Tests: SS, BP Time: 5 sec
System Timing Scan Control Bus	Tests host, SS, FECT access and scan control to the system timing circuits (on the FECT) by entering test Vector Parameters into Test Registers on the FECT and then reading them back. The TxSYNC clock is prescribed by these Vector Parameters and needed to clock each VP Byte into a board.	Req.– MC, SS, FECT Tests: SS, FECT Time: 10 sec
System Timing TxSYNC and RxSYNC Timing	Checks the accuracy of the FECT generated clocks and more completely tests FECT response to the PAUSE on and off instruction from the SS Scan Control Bus, and the response to INIT and RESET from the FE CPU Control Bus.	Req.– MC, SS, FECT Test: FECT Time: 20 sec
System Timing SCB–RxSYNC RAM	Checks the RxSYNC RAM on the FECT system timing circuits by FECT Scan Control Bus input.	Req.– MC, SS, FECT Test: FECT Time: 10 sec
TD Digital Receive	Checks the digital summing of the on board I&Q data. Test data is inserted and collected from the DBFBS chip on each TD. The MC–SS–FECT–TD instructions pulse walking ones and zeroes from the board's first DBF1 to its eighth to its DBFBS which the host compares to expected results.	Req.– MC, SS, FECT, at least one TD Tests: TDs Time: 10 sec

6–5–1 Diagnostic Tests (Continued)

TD Memory and Register	Tests the TD components that hold and decode CPU commands and Vector Parameters needed to create the transmit and receive signals. Data is inputted and read by the FECT–TD Access bus. Loops can be requested. Use **[F2]** to select Test Mode DEBUG. One particular TD or one particular channel on either one TD or all TDs can be checked. Use the default memory locations.	Req.– MC, SS, FECT, TDs Tests: TDs Time: 45 sec (Auto)
TGC_Vref Test	Checks the EQ to TD Analog Control Interface and devices that deliver control data for TD pulser current on transmit and TD analog gain on receive.	Req.– MC, SS, FECT, EQ, TDs Tests: EQ, TDs, FECT Time: 1 min
TLM Components	Tests all the remaining components on the TLM. Press **[Enter]** when the system asks if you want the Full Board test; the system will run all component tests (use all parameter files).	Req.– MC, TLM, VP Tests: TLM Time: 90 sec
TLM Memory	Runs a 32 bit access VME Memory test to check: TLM Program DRAM, Replay DRAM, Image Waveform VRAM, Graphics RAM, and Crossbank operation.	Req.– MC, TLM, VP Tests: TLM Time: 75 sec
TLM VME Interface	Checks that the board is in the correct slot, TLM VME I/F ASIC and InSite EEPROM which holds information about that board, and TLM VME Address and Data paths to and from the MC.	Req.– MC, TLM, VP Tests: TLM Time: 10 sec
Transmit 1 **(Loopback needed)**	Exercises all TD pulsers, one channel at a time. VREF and SHADE are set to a particular value for each subtest. The test signal travels from each TD pulser through the RF cables and back through the loopback to a distant receive channel. Basic: four loops each using a particular VREF & SHADE bit Extended: uses several VREF and all 5 SHADE bits Enter 3, 2, 1 or 0 for whichever XDIF connector has the loopback. Press **[F10]** to use the default test parameters or **[F2]** to adjust parameters. If half the channels fail, select another offset: the transmit channel used for part of the test is bad.	Req.– MC, SS, FECT, EQ, XDIF, Loopback, cables Tests: TD boards, RF cables, XDIF Time: 2 min (basic) 15 min (extended)
Transmit 2 **(Scope needed)**	Transmit 2 enables viewing of one channel's transmit waveform on a scope connected to the loopback. EQ and TD values can be altered to vary transmit characteristics. Setup values are supplied by a pop–up menu.	Req.– MC, SS, FECT, EQ, XDIF, Loopback, cables Tests:TDs, cables, XDIF

6–5–1 Diagnostic Tests (Continued)

VEQ TGC Comprehensive	Tests the VEQ TGC processing at full speed of I&Q data from the second selected TD board DBFBS ASIC through the VEQ board to the BMP3. Some test I&Q data is taken from the previous TD and inserted into the TD under test. The TDs under test must be consecutive from the VEQ. Auto mode performs the Basic TGC test. The Extended mode, selectable in the manual choice, also tests three additional VEQ functions.	Req.– MC, SS, FECT, **VEQ,** at least the last two TDs, BMP3 Tests: VEQ, paths Time: 2 min if BASIC or 4 min if Extended
VP Components	Verifies operation of the VP's window ASIC/VTG, color priority channel, graphics channel, gray channel, color channel, and RGB mux contrast/invert.	Req.– MC, FECT, VP Tests: VP Time: 3.5 min.
VP Functional Test Tool **VP gray reference bars** 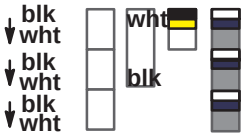 Color in 3rd and 4th gray bars is unique for each of the four patterns VP color reference bars 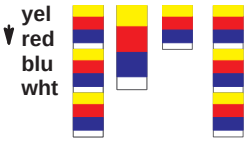 the first pattern repeats the primary color scale, the other two are simply four solid red bars, the next pattern is four solid blue bars	Visual test to verify the VP's overall operation by processing and displaying representations of its IIC controller and color bar logic with patterns to the monitor. System beeps at completion of each of three parts. Test sets up the VP's IIC video timing, FPGA's, and VCR decoder to display the following: quad image (Input from VCR), 4 gray reference bar groups, 3 color reference bar groups. **TURN OFF THE VCR TO ELIMINATE DISTORTION IN THE IIC TEST** When the Test Input prompt appears, **[Enter]** to select **Yes** or press **[F2]** , **[↓]** to No. Press **[F10]** to accept current choices and start the test. Watch the LOGIQ™ 700 monitor. Then grade the result. Press **[F2]** and use down arrow to indicate a fail. Press **[F10]** to accept highlighted choice. 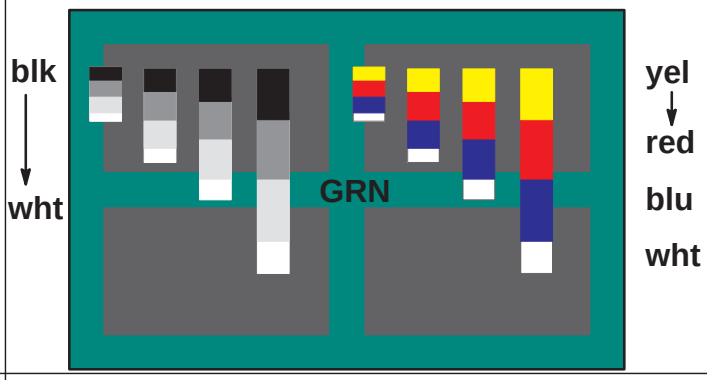 	Req.– MC, FECT, VP Tests: VP, monitor Time: 1 min, operator dependent
VP Memory	Runs a standard VME memory test of VP Look Up Tables.	Req.– MC, FECT, VP Tests: VP Time: 15 sec

6–5–1 Diagnostic Tests (Continued)

VP VME Interface	Tests the VP VME I/F ASIC and InSite EEPROM which holds information about that board, and the VP VME Address and Data paths to and from the MC.	Req.– MC, FECT VP Tests: VP, BP Time: 5 sec
XDIF Wrapback	Verifies host access to XDIF using its Wrapback control register through the SS → EQ→ XDIF path. Checks: • SS FE Interface block • EQ FE Control Interface and Probe Control blocks • Probe Control cable • XDIF Wrapback Control Register Selecting ‘0’ for Loop Count and ‘No’ for Halt on Error causes the test to repeat until interrupted with **[Ctrl+A]** or **[Esc]**.	Req.– MC, SS, FECT, EQ, XDIF, cables Tests: FECT, EQ, EQ to XDIF P1 cable, XDIF Time: 20 sec. per loop
XY Functionality	Verifies operation of all major XY functions at full speed. Host injects data to the ALM and CALM which interact with the XY to scan convert the R theta data to x–y data using several possible algorithms. The XY outputs to the VP which CINE records. The host checks output at CINE. If bad, host backtracks to find where the data was last found to be good. It creates patterns as it runs these tests. Use the List File: Press **[F2]** when the system prompts for input, then arrow down until List File is highlighted. Press **[Enter]** and **[Enter]** again when the specific file is displayed.	Req.– MC, ALM, CALM, XY, VP, CINE Tests: XY Time: 100 sec.
XY Memory	Runs a standard VME memory test that checks XY memory and LUTs.	Req.– MC, FECT, SS, VP, XY Tests: XY, BP Time: 25 sec
XY VME Interface	Tests the XY VME I/F ASIC and InSite EEPROM which holds information about that board and the XY VME Address and Data paths to and from the MC.	Req.– MC, FECT, SS, XY Tests: XY, BP Time: 5 sec

6–5–2 RF Troubleshooting

Note

A loopback is required to run RF diagnostics.

To troubleshoot RF problems, it is sometimes best to select particular channels to test or avoid. The only requirement is that at least five consecutive TD boards are selected. The RF tests use a channel in the opposite half to test the first group, then another channel in the first tested group to test the other half set of channels. If the signal source channel is bad, all the channels it tests will fail. If this happens, alter the OFFSET channel.

To test channels 16 to 111 when channel 96 is suspect or bad, change the offset to another on–board channel, like 2 instead of 0. (Some functions have one component to cover two channels.) Then channel 18 will be used to test channels 64 to 111 and channel 98 will be used to test channels 16 to 63.

Use table to help select start and end channels and another offset for the Transmit 1 and Analog Receive diagnostics. The transmit channel for the Receive test and the receive channel for the Transmit test uses the on–board channel of the last board to test channels below 64 and the first TD in the set when testing channels 64 and higher.

TABLE 6–6
TD CHANNEL NUMBER ASSIGNMENTS

slot	TD#	TD Channels	RF Cable	XDIF
A23	TD0	0 1 2 3 4 5 6 7	P1 rf cable	XDIF J6
		8 9 10 11 12 13 14 15	P1 rf cable	XDIF J6
A22	TD1	16 17 18 19 20 21 22 23	P1 rf cable	XDIF J6
		24 25 26 27 28 29 30 31	P1 rf cable	XDIF J6
A21	TD2	32 33 34 35 36 37 38 39	P2 rf cable	XDIF J8
		40 41 42 43 44 45 46 47	P2 rf cable	XDIF J8
A20	TD3	48 49 50 51 52 53 54 55	P2 rf cable	XDIF J8
		56 57 58 59 60 61 62 63	P2 rf cable	XDIF J8
A19	TD4	64 65 66 67 68 69 70 71	P3 rf cable	XDIF J5
		72 73 74 75 76 77 78 79	P3 rf cable	XDIF J5
A18	TD5	80 81 82 83 84 85 86 87	P3 rf cable	XDIF J5
		88 89 90 91 92 93 94 95	P3 rf cable	XDIF J5
A17	TD6	96 97 98 99 100 101 102 103	P4 rf cable	XDIF J7
		104 105 106 107 108 109 110 111	P4 rf cable	XDIF J7
A16	TD7	112 113 114 115 116 117 118 119	P4 rf cable	XDIF J7
		120 121 122 123 124 125 126 127	P4 rf cable	XDIF J7

6–5–3 Calibration

Note

The only time the system requires any type of calibration (DC offset calibration) is when a TD board is moved or replaced or system software was reloaded. Otherwise, calibration is only for testing the unit.

Note

A loopback isn't required to be installed on the unit when running DC offset calibration for TD board changes or software reloads, but *Calibrate Gain and Phase* and *Tx On for Gain for Gain and Phase* subtests must be turned off using the F2 key prior to running the calibration.

Description. Once calibration has started, the system checks Front End configuration, whether a loopback is present on the prescribed slot, and gross TD channel performance.

During calibration the host causes the first channel of the second half (064) to be pulsed to test the receive channels for channels 0 to 63. Then the first or selected OFFSET channel (channel 0) in the first half is pulsed to test channels 64 to 127.

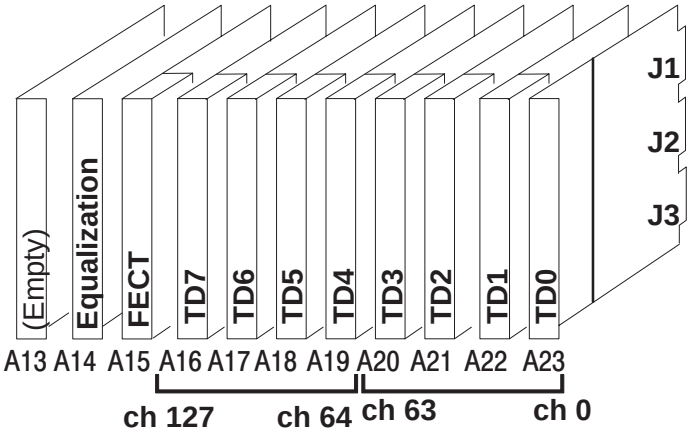

TD CHANNEL ASSIGNMENTS
ILLUSTRATION 6–30

Test Purpose. The Calibration Diagnostic can be used to find bad TD channels, RF cables, or XDIF slots by moving TD cables, TD boards or the loopback and seeing if the bad channel remains, moves, or disappears. If all channels pass with the loopback, then an image artifact may be caused by a probe's faulty element(s).

6–5–3 Calibration (Continued)

Minimum System. Calibration requires all FE boards, a known good loopback, the MC, and the SS. Calibration requires diagnostic PC access to the software.

Time It takes about four minutes to test the path to each XDIF slot.

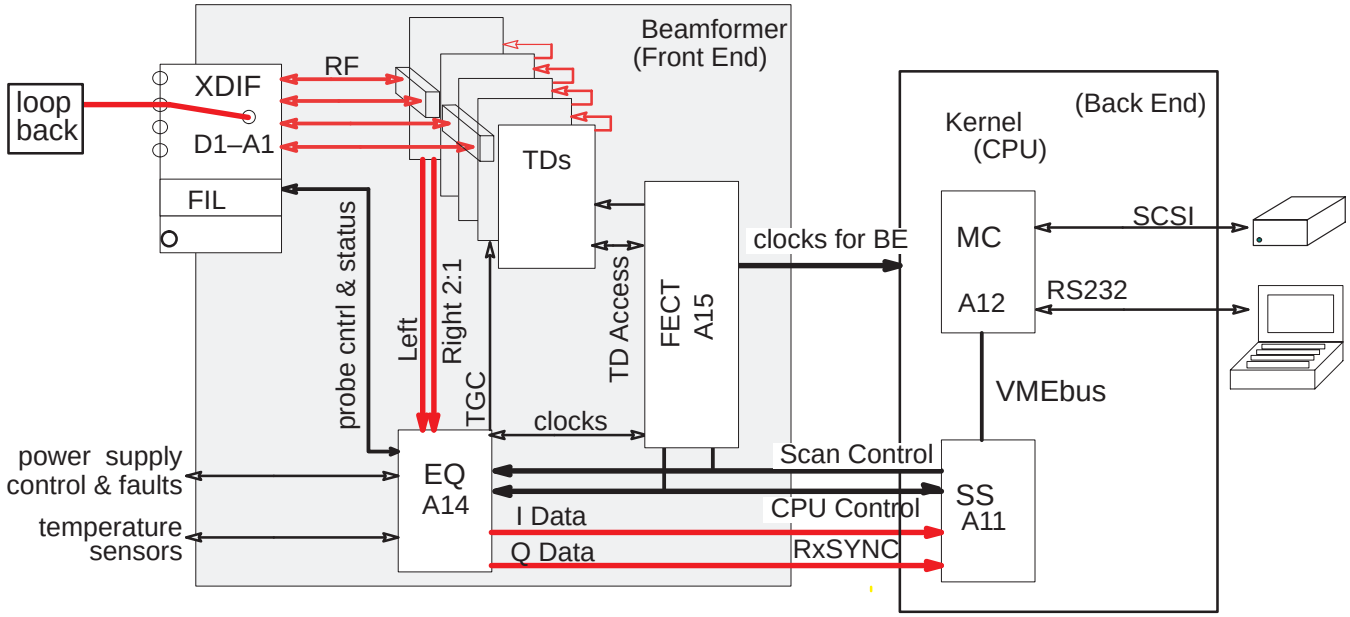

CALIBRATION DIAGNOSTIC ELEMENTS
ILLUSTRATION 6–31

Procedure. To run the calibration diagnostic, proceed as follows:

1 . Attach the loopback to the desired XDIF slot.

2 . Attach the diagnostic PC and access the diagnostic software.

3 . Use **[F3]** to move the highlight from the menu bar to the box.

4 . Press the down arrow **[↓]** to highlight the calibration test. `(Calibration (Loopback – Any))`. Press **[Enter]**.

5 . Use **[F2]** to open parameter window, arrows **[↓]** to move the highlight to the connector number that identifies where the loopback is attached, and **[F10]** to accept and start calibration.

6 . To view the results, use the right arrow to highlight the word 'PASSED' or 'FAILED' or 'ABORTED.' Press **[Enter]** and the Calibration Capture Log will appear. If the diagnostic aborted or failed, record the details and fix the problem.

7 . Move the loopback to another slot; repeat diagnostic; select appropriate or desired test parameters.

6–5–3 Calibration (Continued)

Diagnostic Navigation. Some hints to navigate the test setup:

- **Connector No. –** The answer to Connector Number prompt tells the host which XDIF connector has the loopback attached to it. Connector 0 is the one on the right; connector 3 is the one on the left. (See illustration below.) **Calibration will abort if this entry is wrong.**

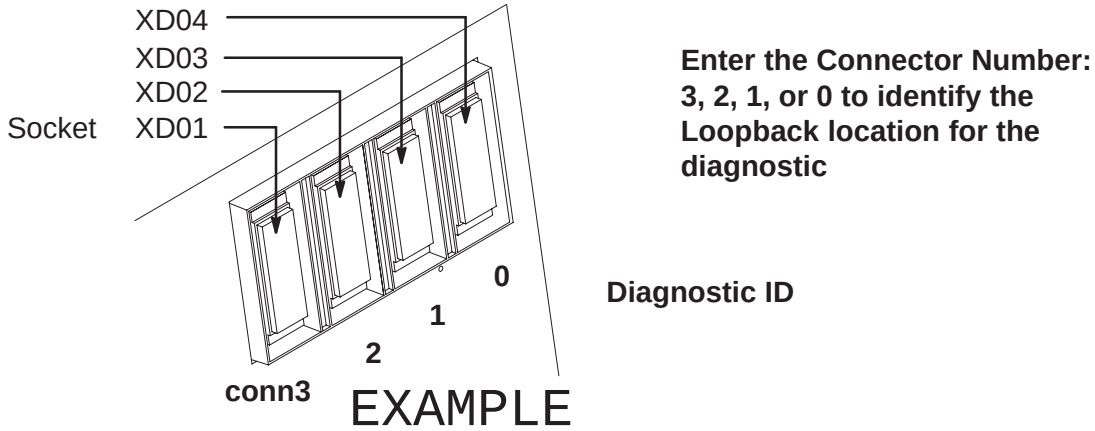

- Press **[F10]** or **[Enter]** to accept all current choices and start the test.
- Use **[Esc][Esc]** to close the Options box.
- Use **[Ctrl A]** to abort the test while the popup is still open

```
********** History **********            NOTE:  Date = YYYY/MM/DD
                     Connector
   Date      Time   (3=L,0=R) Loopback            Frequency
----------  ------  --------- --------  ------------------------------------
1994/12/19   11:15      1       W0164Q  2.50,3.75,5.00,6.25,7.50,8.75,10.00:
1994/12/19   11:08      1       W0164Q  7.50,10.00:
1994/12/19   11:06      0       W0164Q  6.25,7.50,10.00:
1994/12/19   11:02      0       W0164Q  10.00:
1994/12/19   11:00      1       W0164Q  2.50,3.75,5.00,6.25,7.50,8.75,10.00:
1994/12/19   10:53      2       W0164Q  2.50,3.75,5.00,6.25,7.50,8.75,10.00:
1994/12/19   10:48      3       W0164Q  2.50,3.75,5.00,6.25,7.50,8.75,10.00:
1994/12/19   10:41      2       W0164Q  2.50,6.25,7.50:
1994/12/19   10:38      1       W0164Q  3.75,6.25,8.75:
1994/12/19   10:31      0       W0164Q  2.50,3.75,5.00,6.25,7.50,8.75,10.00:
                            Connector Number
             ---------------------------------------------
Frequency      0 (XD04)   1 (XD03)    2 (XD02)    3 (XD01)
---------    ----------  ----------  ----------  ----------
  1.25       **********  **********  **********  **********
  2.50       1994/12/19  1994/12/19  1994/12/19  1994/12/19
  3.75       1994/12/19  1994/12/19  1994/12/19  1994/12/19
  5.00       1994/12/19  1994/12/19  1994/12/19  1994/12/19
  6.25       1994/12/19  1994/12/19  1994/12/19  1994/12/19
  7.50       1994/12/19  1994/12/19  1994/12/19  1994/12/19
  8.75       1994/12/19  1994/12/19  1994/12/19  1994/12/19
 10.00       1994/12/19  1994/12/19  1994/12/19  1994/12/19
Loopback         W0164Q      W0164Q      W0164Q      W0164Q
```

CALIBRATION LOG EXAMPLE
ILLUSTRATION 6–32

6–5–3 Calibration (Continued)

Troubleshooting. The appropriate action depends on the failure pattern if any. Put the loopback on another XDIF connector; if problem disappears, the XDIF may be bad. If all or many channels fail, it may also be the cable, XDIF or loopback. Run the test with another loopback. Then swap J4 cable for the failed TD board to another, if problem stays at the same channel, the TD is probably bad. If however the bad channel(s) move(s), the RF cable or XDIF may be at fault.

TABLE 6–7
POSSIBLE ACTIONS IF SYSTEM ABORTS CALIBRATION

	Move highlight to ‘ABORTED’ in the Status box and press Enter. Read or copy what is said there to help determine the problem.
	Change loopback connector number to the correct number.
	Verify that the TD Cable Type in the System Configuration Log is set to ‘1.’ Refer to page 6–38.
	Verify that the TD, XDIF and BP FRU and BP SYSTEM models are correctly identified and their STATUS is ‘PRESENT’ as read by the System Configuration Log. Refer to pages 6–36 and 6–40.
	Verify all required boards, cables, and loopback are well seated.
	Try another loopback.
	Run Transmit 1 and Analog Receive to find bad channels.

TABLE 6–8
POSSIBLE ACTIONS IF SYSTEM FAILS CALIBRATION

	Move highlight to ‘FAILED’ in the Status box and press Enter. Read or copy what is said there to help you determine the problem.
	Put the loopback on another XDIF connector; if problem disappears, the XDIF may be bad.
	Verify all required boards, cables, and loopback are well seated and ensure that all connections do not have dirt or lint on them.
	Try another loopback.
	Run Transmit 1 and Analog Receive to help determine if TDs or cables are bad.
	Check all pins and connectors for damage or dirt. Blow dust from the XDIF slot, the loopback, and TD J4.

6–5–4 Noise Floor

Description. The Noise Floor diagnostic activates the TD digital components and then analyzes every Front End receive channel to determine that the beamformer works, that the TDs demodulate the signal they receive, and that their channels do not generate excessive noise. This diagnostic test requires the use of a Loopback and Service Mode. The diagnostic collects TD data with their pulsers off and system gain high, to determine the noise floor of the beamformer and check for bad channels, caused by TD boards, XDIF assembly or RF cables. This test is repeated usually 10 times for 2.5, 5, and 10 MHz frequencies. A channel is not bad unless it fails for a majority of test passes.

Note

Clicking may occur at the start of this test and should be considered normal.

Minimum System. Entire Front End, loopback, RF cables, XDIF–EQ cables, MC, SS

Time Requirements. 3.5 min /slot.

Choices.

Test Name:	**Noise Floor (Loopback – Any)**
Probe Connector	(0–3) 3 is on left, 0 is on right
Run Automated Test	Use **[F2]**, arrow, and **[Enter]** to change Select particular channels by selecting NO here Start Channel, End Channel, File Data: say NO.
Number of Loops to Run	If repeated tests are desired, enter number.

Component Correlations. Refer to table 6–9.

TABLE 6–9
CHANNEL/COMPONENT CORRELATIONS FOR BEAMFORMER

Channel	Cable	Board
ch. 000 to 031	XDIF J6	TD0 & 1
ch. 032 to 063	XDIF J8	TD2 & 3
ch. 064 to 095	XDIF J5	TD4 & 5
ch. 096 to 127	XDIF J7	TD6 & 7

Results. PASSED or FAILED or ABORTED appears in the STATUS window. Failures are detailed in the Capture Log. Use the right **[→]** arrow to highlight test Status and press **[Enter]** to open the Capture log. Press **[Esc][Esc]** to close it. Use the arrows to select another test or another capture log.

Action to Take if Test Fails. If noise is bad, run Beamformer tests when once certain the system has no Back End problems. If the Front End boards are functioning properly, investigate whether the site may be experiencing EMI problems.

6–6 LOADING SYSTEM SOFTWARE

If the system language is other than English, the OB worksheet comments do not get translated. Also if the user modified the default comments on the OB–1 Summary Report or the OB–2/3 Anatomy Page, the user modifications must be made again after a software reload. Before reloading software, print the current OB–1 Summary Report and OB–2/3 Anatomy Page. After loading software, type the user's preference over the default English comment.

TABLE 6–10
OB DEFAULT COMMENTS FOR LANGUAGES OTHER THAN ENGLISH

Note

OB default comments for languages other than English can be found in the applicable Basic User Manual. The following table lists each language's Basic User Manual part number.

LANGUAGE	BASIC USER MANUAL	LANGUAGE	BASIC USER MANUAL
ENGLISH	2227866–100	SWEDISH	2227866–142
SPANISH	2227866–106	DANISH	2227866–160
FRENCH	2227866–101	GREEK	2227866–151
GERMAN	2227866–108	TURKISH	2227866–159
ITALIAN	2227866–111	RUSSIAN	2227866–145
PORTUGUESE	2227866–127	JAPANESE	2227866–140

TABLE 6–11
RECORDING TABLE FOR USER PREFERRED OB COMMENT

	English Default	User Preference
OB–1 Summary Report	Gestational Sac	
	Yolk Sac	
	Heart Motion	
	Right Adnexa	
	Left Adnexa	
OB–2/3 Anatomy Page 2 clicks up on WKSHEET	Head	
	Four Chamber View	
	Spine	
	Stomach	
	Kidneys	
	Cord Insertion	
	Bladder	
	Upper Extremities	
	Lower Extremities	

6–6 LOADING SYSTEM SOFTWARE (Continued)

ATTENTION **The system serial number is copied to any Options disk; enter it for the backplane on the System page of the System Configuration Log before you load Options. You won't be able to reload an Options disk to a unit that has a different system serial number than the one noted the first time the Option is loaded.**

Step	Procedure
	PREPARE TO LOAD SYSTEM SOFTWARE
1	Attach the diagnostic PC to the Service port and start the VT220 emulation software. Use the service key MOD to access diagnostics. The PC screen should report that the PC and 700 are 'Connected.'
2	Run functional checks (Section 4) and top level diagnostics. Fix any problems.
3	Review the Temperature Log. The system will stop working if the unit, power supply or endo probe temperature becomes too hot. Clean the main air filter and the power supply fans. Inspect the sensors and cables if the readings are bad. Refer to the temperature messages in Section 8.
4	Review the Error Log (Section 8). The log should not contain unresolved system level fault errors.
5	Exit diagnostics but keep the diagnostic PC attached.
6	Save User Preferences. Digitally archive System, Peripheral, Application, Annotation Library, Maps to save time when reloading similar software. Make hard copies that you can use to verify or re–enter customer preferences. To archive all PRESETS, insert an MOD disk and click UP on the **Image Presets** toggle switch, then select ARCHIVE by pressing the first SW2 toggle switch up. Toggling SAVE TO DISK will save the following items: **[Code L]** Annotation Library **[Code M]** Custom USER Maps **[Code P]** Presets for probes, exams, format, peripherals **Even with Presets Archive you will have to fix OB Comments manually if the site does not want English defaults.** **[Calc]** If user modified the default English OB comments, or this is a non–English site, this step will save the desired comments. Refer to page 6–60. **Write the unit's S/N, software version that made the Presets, and date saved on the PRESET MOD disk. There is no way to have the unit list data about the archived presets. Although Presets can be added to an MOD disk with images, keep them separate.**
7	Archive any patient images that the clinician wants saved.

6–6 LOADING SYSTEM SOFTWARE (Continued)

Step	Procedure
	LOAD SYSTEM SOFTWARE
1	Verify VFD displays English. The softkey display (VFD) can display asterisks to indicate boot up progress. From one to five asterisks appear depending on that progress. To toggle between asterisks and English words, press/hold **[Code] [Shift ⇑] [X] [C]** all at the same time, then **release [X] [C] and press [V]** to toggle between asterisks and messages. Leave it displaying messages to review the **progress of the load on the VFD**. To see the last item reported by a system boot, which is the software version and creation date, press **[Code] [Shift ⇑] [X] [C]** whenever the system is up.
2	Verify all probes are recognized. Use **[Code S]**
3	If present, **disconnect the site's network from the Ethernet port.** When software is loaded, the MC looks for software available through the network and this action produces noise.
4	Turn off the unit.
5	Inspect the MOD disks for loose hardware or labels which could jam inside the drive. If okay, insert first MOD disk into the drive. Do not force the disk. Its label should face upward. The software loading process includes an option to reformat the hard drive. The option appears in the form of a prompt on the PC: "`Perform low level format (Y/N):`" Reformatting, which occurs only if you answer "Y" (for yes), adds approximately 80 minutes (for a 4G drive), making the total load time approximately 100 minutes. If problems occur, the load time is longer. If you do not answer the prompt within 10 seconds or answer "N" (for No), reformatting does not occur and total load time is approximately 25 minutes. **DO NOT TURN OFF POWER WHILE THE DRIVE IS BEING FORMATTED BECAUSE THIS WILL DAMAGE IT.**
6	After ensuring that power has been off at least 10 seconds, reapply power. The host begins to initialize hardware and copy software, sending messages to the VFD and PC. Monitor these messages to check the progress of the loading process. If the option is exercised, the host will perform a low level format of the hard drive after the message: " `Initializing SCSI driver...`" WATCH FOR ERROR MESSAGES ON DIAGNOSTIC PC SCREEN. The " `to 5.512`" is Partition 1 of the hard drive (read/write). The " `to 5.256`" is Partition 0 of the hard drive (read only). When the host completes loading of software from a disk it ejects that disk. Return the disk to its protective box and insert the next disk, if any, in the MOD. When the host finishes copying files, it boots the system. This takes approximately two more minutes.

6–6 LOADING SYSTEM SOFTWARE (Continued)

Step	Procedure
	CHECK FOR ANY SOFTWARE LOAD ERRORS
1	Scroll the PC screen to review the messages produced by the host during the loading process. If file transfer errors occurred, reload software again. File transfer errors will be noted as ”`unsuccessful copies.`”
2	Enter diagnostics. Look at the Error Log and the System Configuration Log. Use the appropriate service key to access diagnostics. Check Power Up Log and Error Log to verify whether load was good and system is okay. In Configuration Log, verify that the backplane reports its serial number on the FRU page and the unit’s System Serial Number on the final page of Configuration. Correct the numbers or enter information if desired. If `Checksum error in CINE INSITE E2PROM` cannot be corrected, ignore. The EEPROM is write protected. Verify that the Front End backplane EEPROM is readable and the TD Cable Type Code is “1” not 255. Call Service Support about any probe the host cannot read; it may need to have its EEPROM reprogrammed.
3	Run the Path diagnostics**.**
4	**Remove the loopback and reattach the probes** you may have removed. Try to latch each probe as quickly as possible. The host interrogates the probe’s EEPROM for data. Activate each one and check that it is properly identified on the monitor.
5	Exit diagnostics and reboot the system by using the default menu bar EXIT choice. This will re–initialize the system, taking it out of the disruptive diagnostic mode.
6	**Activate each probe** to verify proper operation. Look at the monitor to be sure the Probe Type is correctly identified by the host. If the probe’s PTY bits are read incorrectly, the host may use the wrong probe files causing poor image quality or inappropriate behavior. If it’s EEPROM cannot be read or is empty, the system will display this message: `Probe n Data Invalid. Call Service` appears. This may or may not matter. The Error Log and System Configuration Log will identify probe problems. Call Tech Support for advice.
	LOAD APPLICABLE OPTIONS AND PRESETS
1	If there are **Software Options**, insert the MOD disk for each option one at a time into the drive while applications are active. Check that these SYSTEM MOD’s are WRITE ENABLED: the little square is NOT open. **The unit must be restarted to activate the option. Write the unit’s S/N on the OPTION MOD. The system S/N is encoded on the disk when it is first copied; it must match on reload.** If in doubt about the options a unit should have, look behind the air filter for the Option Rating Plates.
2	Reload the Preset MOD disk copied before you loaded software UNLESS you are loading new software that uses different presets. Special instructions that come with the new software will describe such an exception. To reload PRESETS, insert the MOD disk and click UP on the **Image Preset** toggle switch. Then select ARCHIVE by pressing the first SW2 toggle switch up. Toggle LOAD FROM DISK. Verify the User’s preferred maps **[Code M]** and Library **[Code L]** that existed before are present.
3	Modify OB exam **(Calc)** comments if English defaults not desired by user. See Section 3.

6–6 LOADING SYSTEM SOFTWARE (Continued)

Step	Procedure
LOAD APPLICABLE OPTIONS AND PRESETS	
1	Run functional checks on system. (See Section 4.)
2	Run DC Offset Calibration (located the calibration diagnostic) to maintain image quality. Refer to paragraph 6–5–3.
3	Once you are confident the unit is operating properly, disconnect the diagnostic PC.
4	For new software loads, attach all Upgrade and Option Rating Labels to plate above the power supplies and behind the Air Filter. Complete and return the product locator card(s).

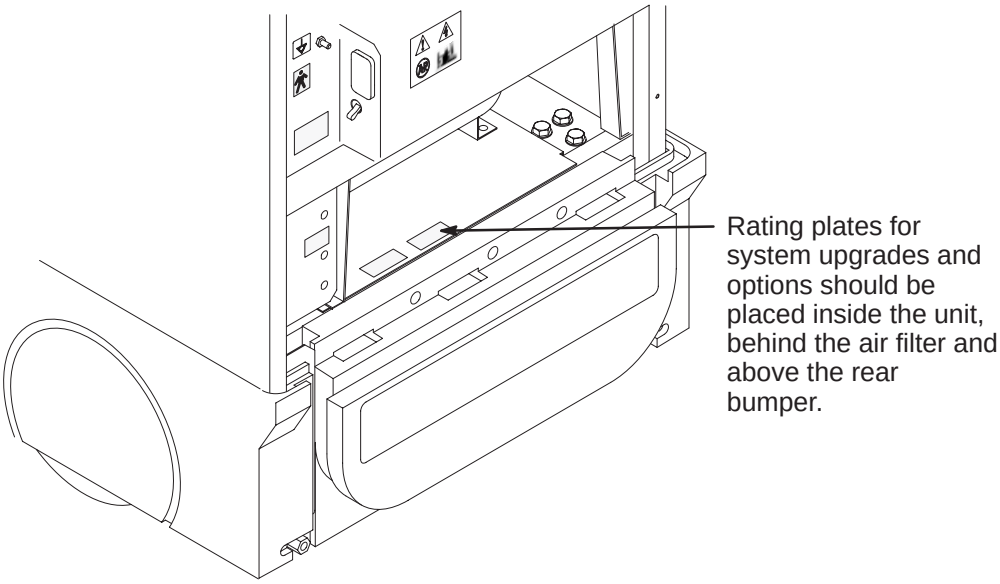

LOCATION OF RATING PLATES FOR UPGRADES AND OPTIONS
ILLUSTRATION 6–33

6–6 LOADING SYSTEM SOFTWARE (Continued)

The oldest Power Up Log consists of the messages from the current software installation. You access it from the top diagnostic menu choice of **View Logs**. Power Up Logs enable you to review system status or problems encountered as the host attempts to load software. Press **[P]** and the system will open the most recent Power Up cycle. To see the initial software load session, press **[Esc][Esc]** to exit the default, most recent Power Up Log. Then highlight Log #00, the first log created when software was installed. Enter this and press **[Home] [Home]**. Here is an example of a software installation:

```
pSOSystem V2.2.2
Copyright (c) 1991 – 1997, Integrated Systems, Inc.
_____________________________________________________
_____________________
START–UP MODE:
  Run the Sphinx BSP Version 0
NETWORK INTERFACE PARAMETERS:
  IP address on LAN is 3.28.124.135
  LAN interface's subnet mask is 0xfffffc00
  Shared memory interface is disabled
  IP address of default gateway to other networks is 3.28.124.254
MULTIPROCESSING PARAMETERS:
  This board is currently configured as a single processor system
HARDWARE PARAMETERS:
  Serial channels will use a baud rate of 38400
  This board's memory will reside at 0x10000000 on the VME bus
  This board's Ethernet hardware address is 8:0:3E:29:2E:5D
  LAN will use the 10BaseT interface
2600/761–GENESIS 2 BOARD CONFIGURATION: 222–A
  Processor Type :: MPC750
  Internal Clock Rate 267 Mhz
  External Clock Rate 67 Mhz
  DRAM Size :: 128 Mega Bytes
  PCI Bus Clock Rate 33 Mhz
  PCI LAN Controller   DEC 21140 Ethernet LANCE
  PCI VMEbus Interface PRESENT
  PCI SCSI Controller  PRESENT
  COM3/COM4 Controller PRESENT
SPHINX BSP VERSION 0 PARAMETERS:
  This machine is in BOOT mode
  Hostname of this unit is mvme67
  Name of the executable file on disk is shex/root_hex.x
  IP address of NFS host to obtain software from is 3.28.124.3
  Name of the NFS mount point  is /home/isle2
  Name of the NFS default path is /home/isle2/mvme
  The AC wall frequency is 60Hz
  The Board Number is G222939301D
  After board is reset, start–up code will wait 1 seconds
_____________________________________________________
_____________________
To change any of this, press any key within 1 seconds

Application Level BSP Driver initialized...
Initializing DMA driver.. Done.
Pseudo device initialized...
```

```
LOGIQ 700 Ultrasound
General Electric Medical Systems
Board Support Version 8.04 Flash
G 2229393– 01–D
04/15/1999  08:46:52
IP: 3.28.124.135 Name: "mvme67"

Initializing SCSI driver... Done.
The following SCSI devices were found...
 Hard    Drive   ID 0 Vendor: SEAGATE  Model: ST34573N
 MOD     Drive                ID  1  Vendor:  FUJITSU    Model:
M2513–MCC3064SS
 Host/MC        ID 7
Probing SCSI Bus for Optical Memory Volume...  Found at 5.1.
Checking File System on pHILE+ Volume "5.1"
              Please be patient... Verify complete.  No errors
Probing SCSI Bus for Direct Access  Volume...  Partitioned Drive
Found at 5.0.
Mounting Direct Access Partition Number 2...  Mount at 5.768.
Checking File System on pHILE+ Volume "5.768"
              Please be patient... Verify complete.  No errors
Mounting Direct Access Partition Number 1...  Mount at 5.512.
Checking File System on pHILE+ Volume "5.512"
              Please be patient... Verify complete.  No errors
Mounting Direct Access Partition Number 0...  Mount at 5.256.
Checking File System on pHILE+ Volume "5.256"
              Please be patient... Verify complete.  No errors

Software Update disk 1 of 3 found.
Formatting because of 5.1/.format

Perform lowlevel format (Y/N):  N

Initializing disk volume 5.768, Please wait...Done.
Initializing disk volume 5.512, Please wait...Done.
Initializing disk volume 5.256, Please wait...Done.
MOD –> HD file update...
  Copy control file "5.1/filelist.2" not found. Aborting.
MOD –> HD file update...
Copying "Calib.DIR/cbldly00.tbl" to "5.512"
Copying "Calib.DIR/cbldly01.tbl" to "5.512"
Copying "Calib.DIR/eqcal.tbl" to "5.512"
.
.
Copying "BFData.DIR/af8_B" to "5.512"
MOD –> HD file update...DONE
There were 981 successful copies.
```

```
MOD –> HD file update...
Copying ”Probe.DIR/iic16.list” to ”5.256”
Copying ”Probe.DIR/wave10.d1” to ”5.256”
.
.
.
Copying ”Menu.DIR/viewpr.mnu” to ”5.256”
MOD –> HD file update...DONE
There were 632 successful copies.

Please insert disk 2 of 3 ...
Checking File System on pHILE+ Volume ”5.1”
                    Please be patient... Verify complete.  No errors
Software Update disk 2 of 3 found.
MOD –> HD file update...
  Copy control file ”5.1/filelist.2” not found. Aborting.
MOD –> HD file update...
Copying ”BFData.DIR/af8_C” to ”5.512”
Copying ”BFData.DIR/b09_C” to ”5.512”
.
.
.
Copying ”BFData.DIR/m09_B” to ”5.512”
MOD –> HD file update...DONE
There were 77 successful copies.

MOD –> HD file update...
Copying ”filelist” to ”5.256”
MOD –> HD file update...DONE
There were 1 successful copies.

Please insert disk 3 of 3 ...
Checking File System on pHILE+ Volume ”5.1”
                    Please be patient... Verify complete.  No errors
Software Update disk 3 of 3 found.
MOD –> HD file update...
  Copy control file ”5.1/filelist.2” not found. Aborting.
MOD –> HD file update...
Copying ”BFData.DIR/o0a_B” to ”5.512”
Copying ”BFData.DIR/oc8_B” to ”5.512”
.
.
.
Copying ”diagExecute/vp_iic_f.dat” to ”5.512”
MOD –> HD file update...DONE
There were 824 successful copies.

MOD –> HD file update...
Copying ”Menu.DIR/pr_help.mnu” to ”5.256”
Copying ”Menu.DIR/vslsetup.mnu” to ”5.256”
Copying ”shex/root_hex.x” to ”5.256”
.
.
.
Copying ”env.name” to ”5.256”
MOD –> HD file update...DONE
There were 271 successful copies.

Boot Device found.  Boot Device is ”5.256”
Loading Software:
  ”5.256/shex/root_hex.x”...Please be patient. 4.052729 seconds.
Starting Application...
Setting Application Code ($029F5000–$02F96000) Write Protected.
B0Looking for SS Board ... FOUND
Looking for VP Board ... FOUND
Looking for XY Board ... FOUND
Looking for ALM_CT Board ... FOUND
Looking for TLM Board ... FOUND
Looking for CALM_CT Board ... FOUND
Looking for CINE Board ... FOUND
Looking for BMP Board ... FOUND
Looking for DP Board ... FOUND
Looking for CFP Board ... FOUND
Looking for PIA Board ... FOUND
Checking System Type ... SINGLE CARDRACK
Probing for Beamformer boards...
Looking for FECT Board ... FOUND
Looking for VEQ Board ... FOUND
Performing Config Mgr init ... done
Beamformer initilization beginning.
Looking for TD Board 7 ... FOUND
Looking for TD Board 6 ... FOUND
Looking for TD Board 5 ... FOUND
Looking for TD Board 4 ... FOUND
Looking for TD Board 3 ... FOUND
Looking for TD Board 2 ... FOUND
Looking for TD Board 1 ... FOUND
Looking for TD Board 0 ... FOUND
Number of TD Boards Found = 8
Beamformer initialization complete
going into calm_init
going into bm_init
going into dp_init
going into dp_actm_init
going into sc_xy_init
going into cf_init
going into pnl_init
going into cine_init
leaving sys_init
Setup sys params..................... Done

R8.0.F.3  at Apr 13 1999 18:57:59
```

6–7 IMPORTANT TROUBLESHOOTING HINTS

Do not recycle power too quickly; wait at least ten seconds between turning off the system and turning on the system.

Unexpected probe behavior may be caused by the host not properly identifying the type of probe attached. Try to take less than one second to twist the probe latch. Check the monitor or use **[Code S]** to check what probe the host 'thinks' is attached.

To see what software is loaded, press **[Code][Shift ⇑][X][C]** at the same time and look at the softkey display.

Watch the softkey display for status as to what is happening as the system boots or loads software. Asterisks can be used when English is not the primary language to indicate boot status. The VFD displays one, then two, then three, then four, and five asterisks when the system is up. To toggle between English and asterisks, hold/press **[Code][Shift ⇑][X][C]**, then release **[X][C] and press [V]**.

Check the Power Up Log #00 and the Error Log AFTER INSTALLING SOFTWARE to verify the software loaded without errors.

Diagnostic tests run in Disruptive Mode to prevent clashes with application software. In Disruptive Mode, the control panel will not respond and the word "`DIAGNOSTICS`" appears where Patient Name appears normally. The path listed on the diagnostic screen begins with "`[D]`" which is another indication that software is in the Disruptive Mode.

A FAILED software test does not necessarily mean the tested boards are the problem. A loose connection, bad cable or another board that supplies bad data could be the problem. Repeat the test and run other tests associated with the failed test to ensure that other boards, devices or cables in the signal path are not causing the actual problem.

Intentionally blank

SECTION 7 – ASSEMBLY

TABLE OF CONTENTS

SECTION	TITLE	PAGE
7–1	PURPOSE OF SECTION	7–2
7–2	ACCESS ITEMS	7–3
7–2–1	Side and Rear Covers	7–3
7–2–2	Front Covers	7–4
7–2–3	Side and Rear Bumpers	7–5
7–3	FUNCTIONAL ITEMS	7–6
7–3–1	Fuses	7–6
7–3–2	Circuit Breakers	7–8
7–3–3	Solid State Relay Board (SSR)	7–9
7–3–4	Isolation Transformer	7–10
7–3–5	Power Supplies	7–11
7–3–6	Audio Components	7–13
7–3–7	RF Cables	7–14
7–3–8	Operator Panel	7–16
7–3–9	Tasklight	7–19
7–3–10	Monitor	7–20
7–3–11	TD Boards	7–21
7–4	JUMPERS	7–22

7–1 PURPOSE OF SECTION

This section shows how subassemblies can be reached and replaced. Included are exploded views and other drawings that show how to remove and install the access covers and how to remove and install many of the functional assemblies of the unit.

The illustrations often include quantity and size information for the mounting hardware. More complete exploded views as well as part names and numbers for all of the unit's components are provided in Section 9.

This icon indicates that dangerous electrical energy exists inside this unit. Unplug the power cord from the wall, keep it under your control, while the covers are off or you remove any electrically supplied part from this system.

This icon indicates that the procedure and hardware are ESD sensitive. Before touching any internal boards or parts that could transfer an electrical discharge to electronic components, make sure power is disconnected and an ESD strap is attached between a unit ESD ground jack and your wrist.

Note

For EMC compliance, it is critical that all covers, screws, shielding, mesh, EMI cores, and gaskets are correctly and tightly installed. If imaging performance is noisy, check that all these things are properly installed.

Always use the ESD strap when handling electronic components or their cables. Put the electronic item inside an anti–static bag or approved container before it is handled by a non–grounded person, moved from the grounded (ESD safe) area, or stored. Always place the item top side up on a flat grounded surface when it is unmounted. Never handle the item outside its anti–static container unless the surrounding surfaces and you are grounded. Discharge the surface of the anti–static container before transferring the item.

7–2 ACCESS ITEMS

7–2–1 Side and Rear Covers

Right Side. The Right Side is the side that's on your right side as you face the front of the unit. Removal of the right side cover provides access to the on board peripheral outlet strip, backplane, EQ signals I/O interconnect cables, and to the isolation transformer. Remove four screws and washers; then lift the cover up and out.

Left Side. The Left Side Cover is the cover on your left side as you face the front of the unit. Removal of the left side cover provides access to the Front End and Back End boards, visibility of status LED's, and TD to XDIF RF cables. Remove four screws and washers; then lift the cover up and out.

Air Filter. Removing the air filter provides access to the filter element and some of the hardware that secures the rear cover. The air filter is held in place by magnets; to remove the air filter, simply pull it off the rear cover.

Rear Cover Removal of the rear cover provides access to the muffin fans and the AC power distribution components. To remove the Rear Cover, it is first necessary to remove both side covers and the air filter. Unplug AC power cord from wall. Label external cables connected to the bulkhead and then disconnect the cables from the bulkhead. Remove eight hex spacers and washer and then carefully lift the rear cover up and off the unit.

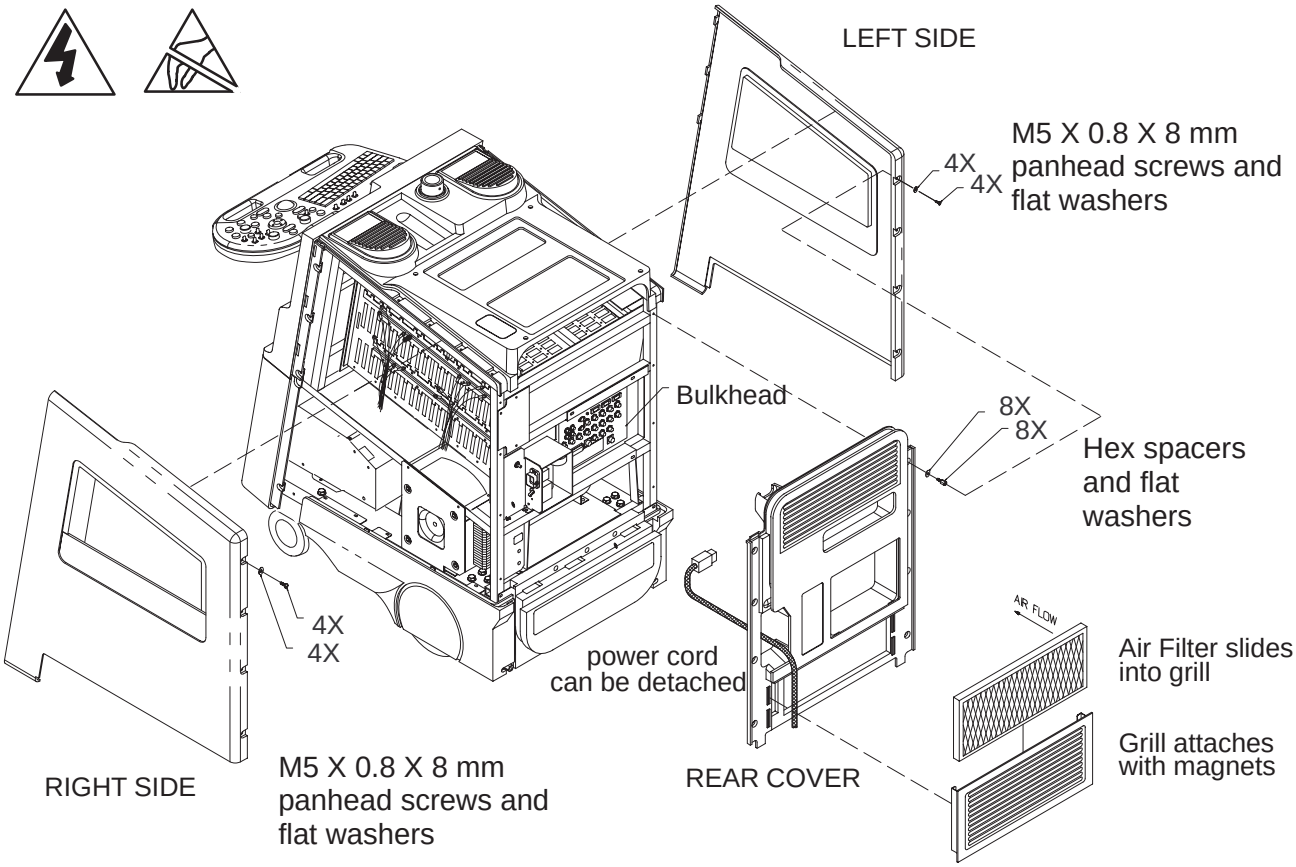

AIR FILTER, SIDE COVER, AND REAR COVER REMOVAL
ILLUSTRATION 7–1

7–2–2 Front Covers

Lower Front Cover. Removing the lower front cover provides access to the MOD drive and the hard drive (peripheral box). To remove the Lower Front Cover: First, pull off the trim strip. Second, swing down the footrest by first loosening the two rear footrest installation screws and then remove the two front footrest installation screws. And finally, remove six screws (the three screws along the bottom edge have flat washers) and pull the lower cover off the front of the unit.

Upper Front Cover. You must remove both side covers (page 7–3) and the operator panel (page 7–16) before removing the upper front cover. Nine screws hold the upper front cover in place. The three screws on each side have flat washers; the three screws the right side are shorter than the other six. The unit's on/off switch must be disconnected from the power extension and then separated from the upper front cover as the upper front cover is removed from the unit.

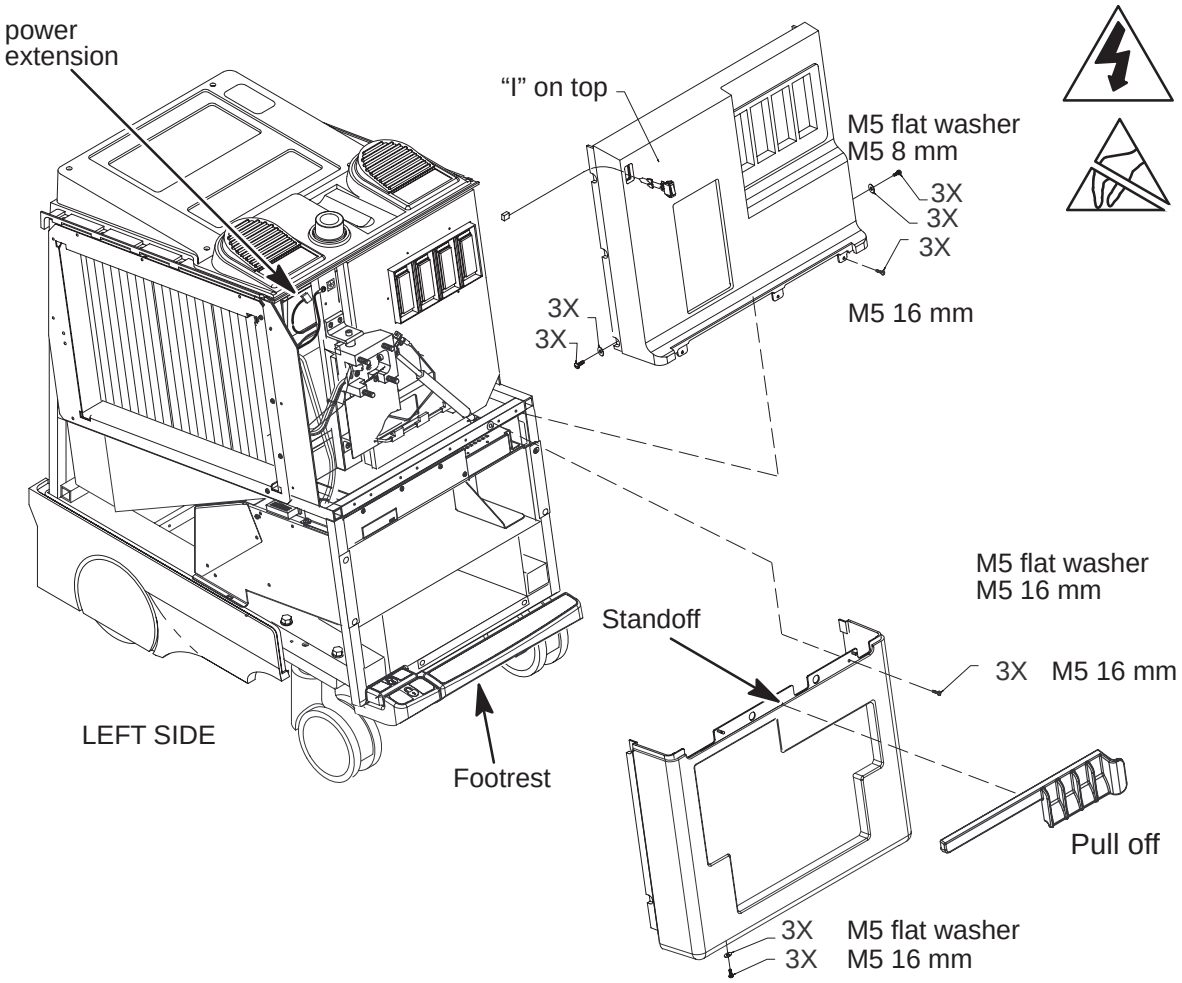

CONTROL PANEL AND UPPER AND LOWER FRONT COVER REMOVAL
ILLUSTRATION 7–2

7–2–3 Side and Rear Bumpers

Note

Don't reverse main filter in grill after cleaning it. Engraved arrow on filter must point into machine or embedded dirt will be blown into it.

Rear Bumper. Access to the two power supplies is obtained by removing the rear bumper. Unplug AC power cord from wall. Pull off the air filter assembly and remove the bumper's three top screws. Then remove the four screws along the bottom edge of the rear bumper.

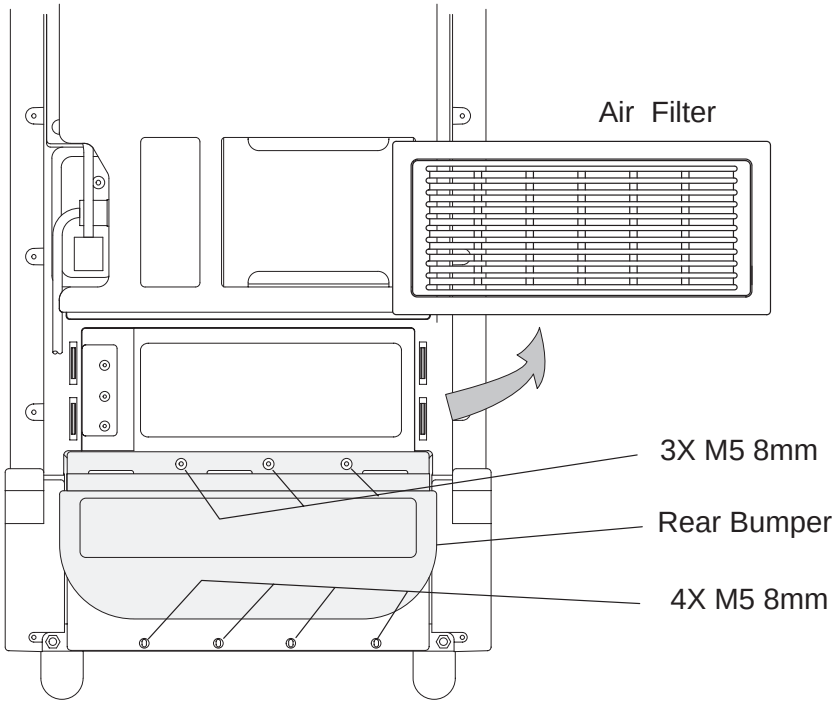

REAR BUMPER REMOVAL
ILLUSTRATION 7–3

Side Bumpers. Removing the side bumpers provides access to reach the rear wheels. The two screws that attach each side bumper to the back of the frame are twice as long as the two screws that attach each bumper to the side frame.

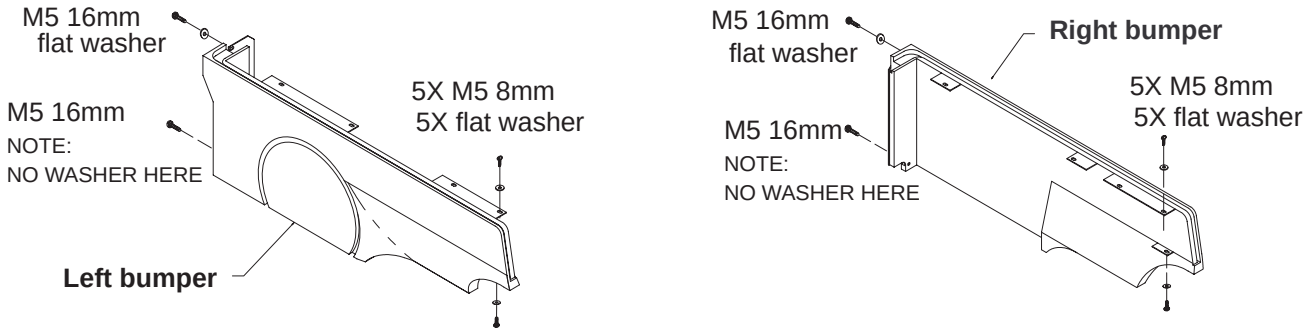

SIDE BUMPER REMOVAL
ILLUSTRATION 7–4

7–3 FUNCTIONAL ITEMS

7–3–1 Fuses

Most of the circuits in the LOGIQ™ 700 are protected by circuit breakers. (See page 7–8.) However, there are four fuses on each MC board. These fuses are listed in Table 7–1 and shown in Illustration 7–5.

TABLE 7–1
LOGIQ™ 700 FUSE COMPLEMENT

FUSE Location	See Illustration	Fuse Designator	Fuse	
			Rating	Part Number
MC adapter board	7–5	F1	250 V, 1 A	46–267217P16
MC on the MVME2700 (power PC) board	7–5	F1	5Vdc	n/a–electrically resettable fuse, cycle system power
		F2	12Vdc	n/a–electrically resettable fuse, cycle system power
		F3	12Vdc (–12 assigned)	n/a–electrically resettable fuse, cycle system power

7–3–1 Fuses (Continued)

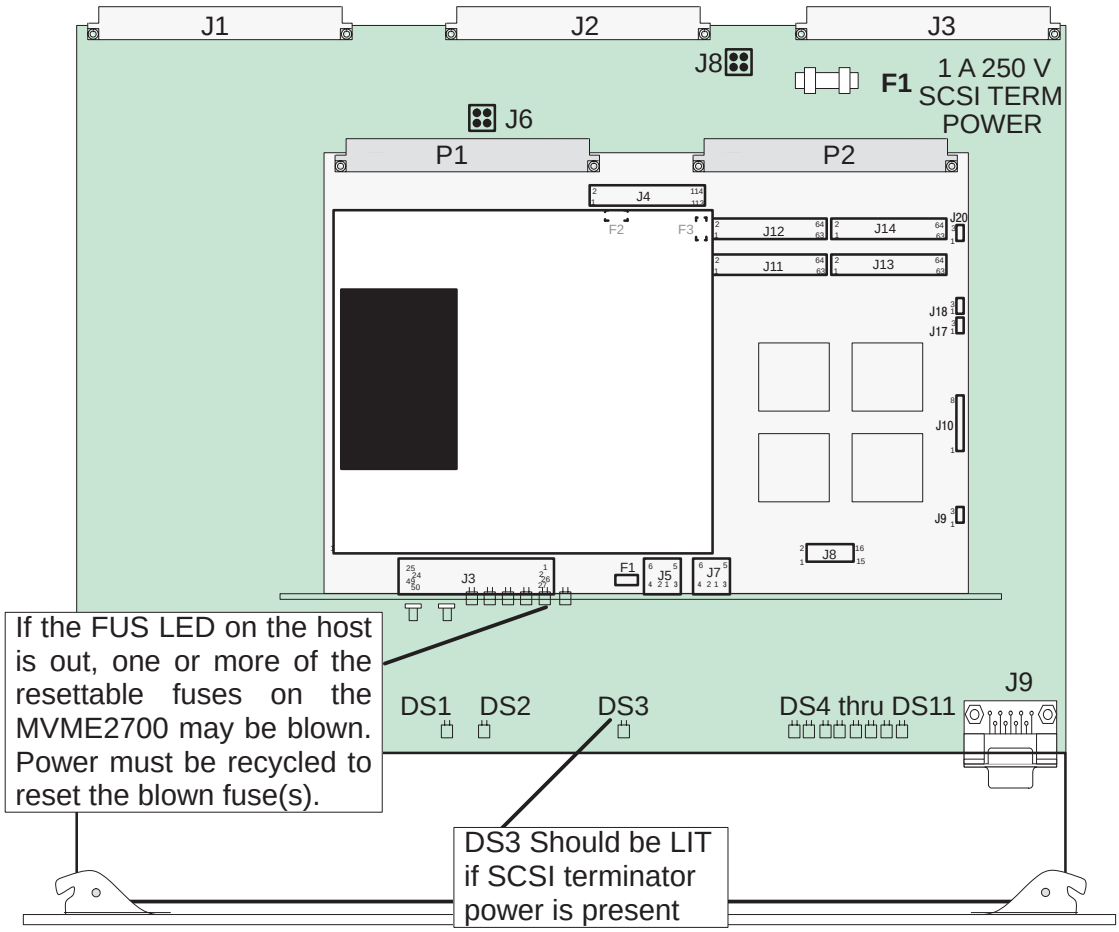

46–267217P16

The F1 fuse will blow when terminator power on the SCSI cable or device is shorted.

LOCATION OF FUSES ON MC/PIA BOARD
ILLUSTRATION 7–5

7–3–2 Circuit Breakers

The units have four circuit breakers: CB1 through CB4.

Circuit breaker CB1 (Main) is located just above the power cord plug and is accessible without removing any covers. To reset this circuit breaker set the rocker switch off and then back to on. To replace this circuit breaker, it is necessary to remove both side covers and the rear cover (page 7–3).

Circuit breakers CB2 (Peripherals), CB3 (both power supplies), and CB4 (Monitor) are accessed by removing the air filter assembly (which is held in place by magnets) and then removing an access cover inside fan box. To reset one of these circuit breakers, simply press the circuit breaker button. To replace one of these three circuit breakers, it is also necessary to remove the left side cover (page 7–3).

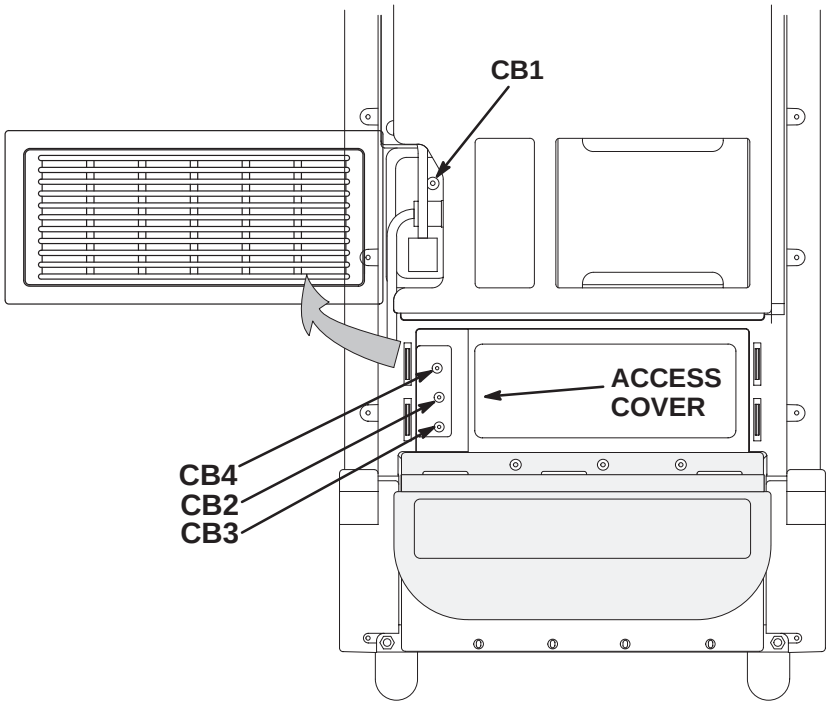

LOCATION OF CIRCUIT BREAKERS
ILLUSTRATION 7–6

7–3–3 Solid State Relay Board (SSR)

To access the SSR, remove the right side cover (page 7–3). The SSR is located on the AC distribution panel, which is just below the power outlets provided for the monitor and peripherals.

All units have a **Soft Start** design which utilizes a jumper (See page 7–22.).

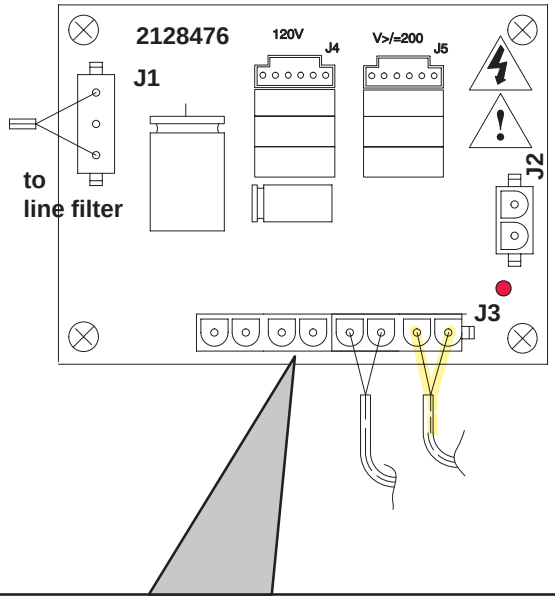

E1A1J3	8	7	6	5	4	3	2	1
	BLK	BRN	RED	GRY	item 46 leads interchangeable		YEL interchangeable	YEL

SSR
ILLUSTRATION 7–7

7–3–4 Isolation Transformer

The isolation transformer is accessed by removing the right side cover. To remove the transformer, tag and disconnect the external wiring to the terminal block on the isolation transformer. Then remove the three mounting screws and carefully (the transformer is heavy) lift the isolation transformer from the unit.

Wiring for the isolation transformer depends on the local electrical service and the voltage rating of the peripheral devices. Refer to Section 3 for wiring details.

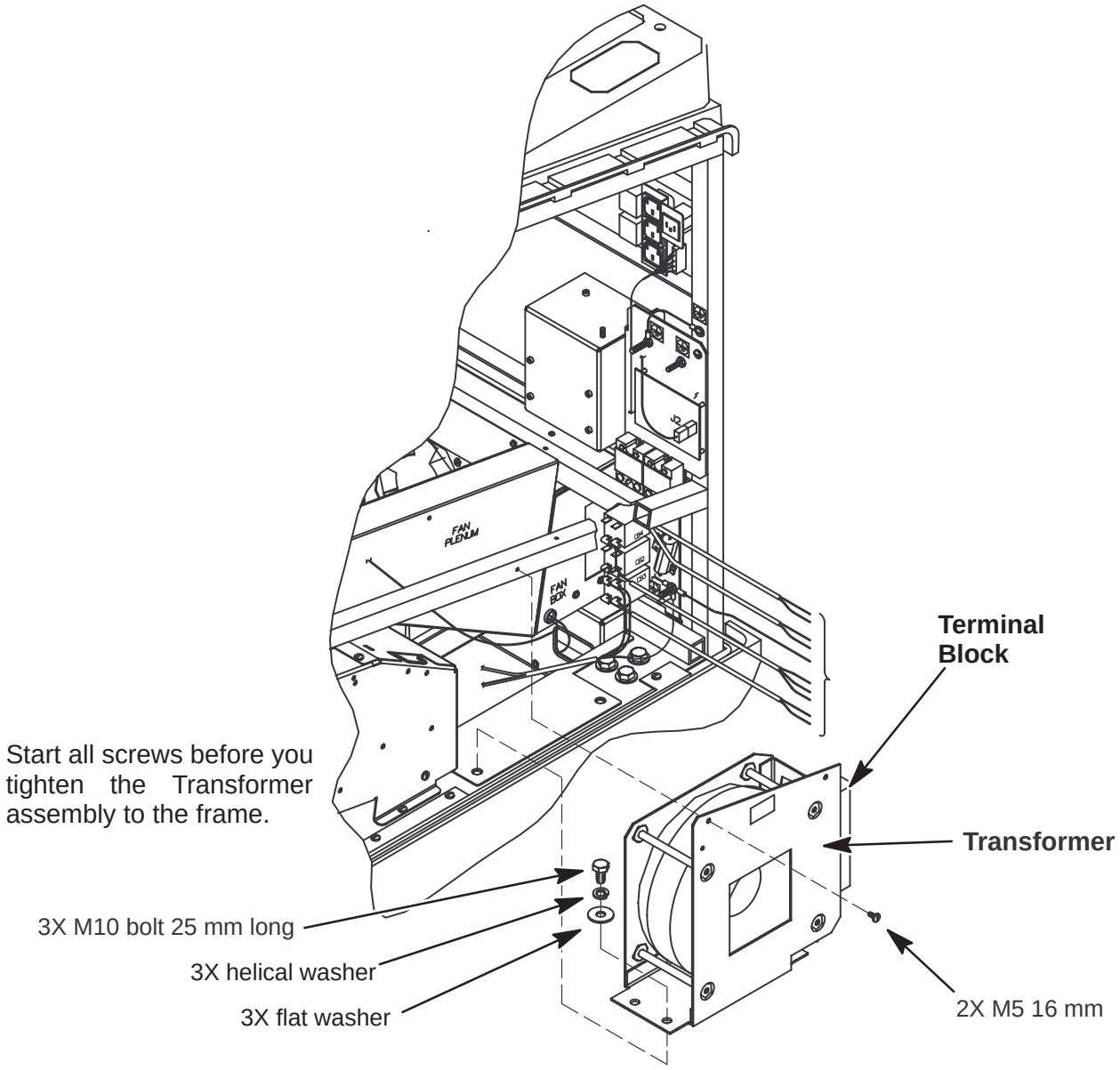

ISOLATION TRANSFORMER REMOVAL
ILLUSTRATION 7–8

7–3–5 Power Supplies

For access to a power supply, remove the air filter assembly and rear bumper (page 7–5). Then tag and disconnect the wiring to the applicable power supply. Finally, remove the mounting bracket that holds the power supply in place and slide the power supply out the rear of the unit.

When installing a power supply, use Illustration 7–10 to check the wiring before reapplying power to the unit.

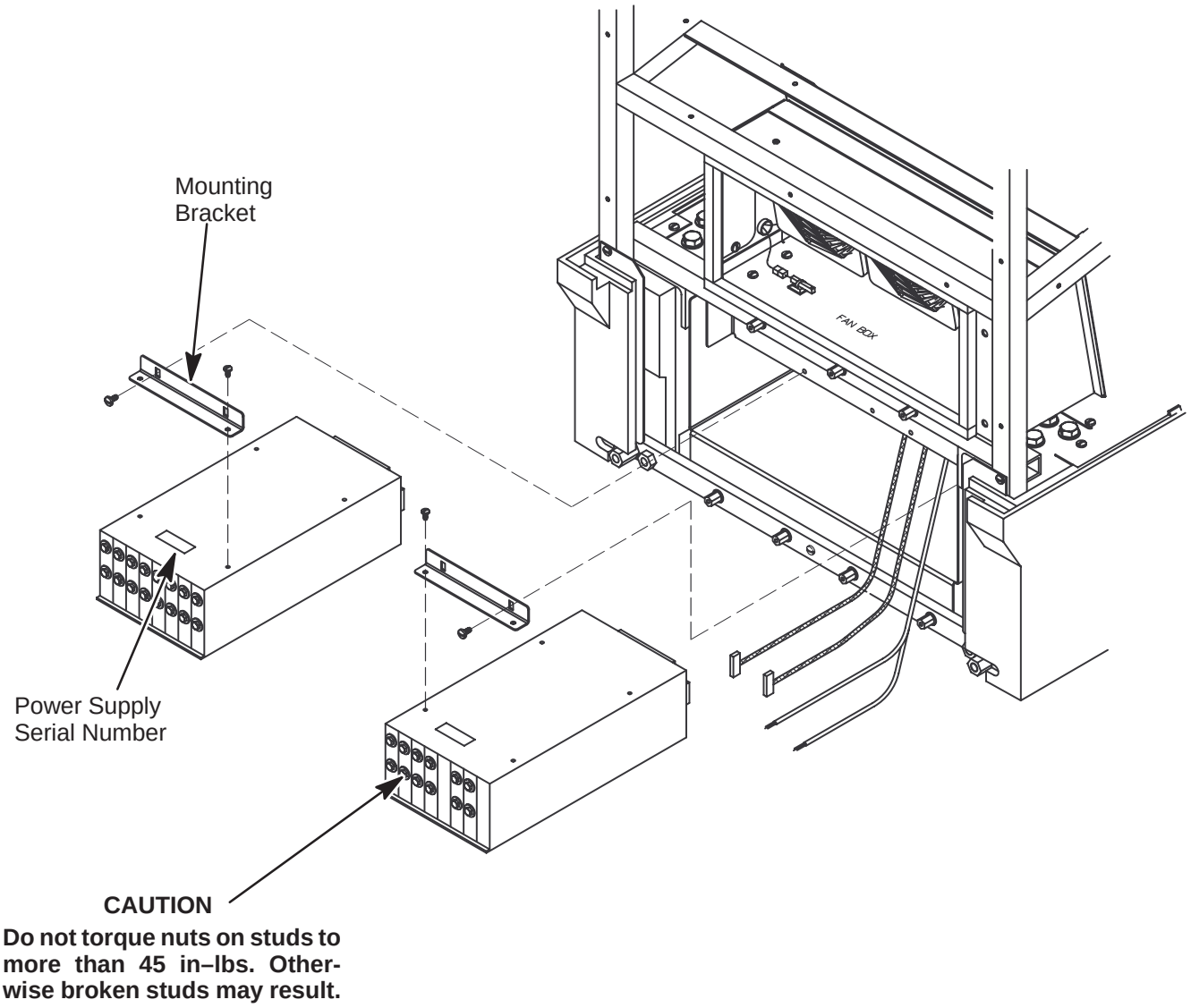

POWER SUPPLY REMOVAL
ILLUSTRATION 7–9

7–3–5 Power Supplies (Continued)

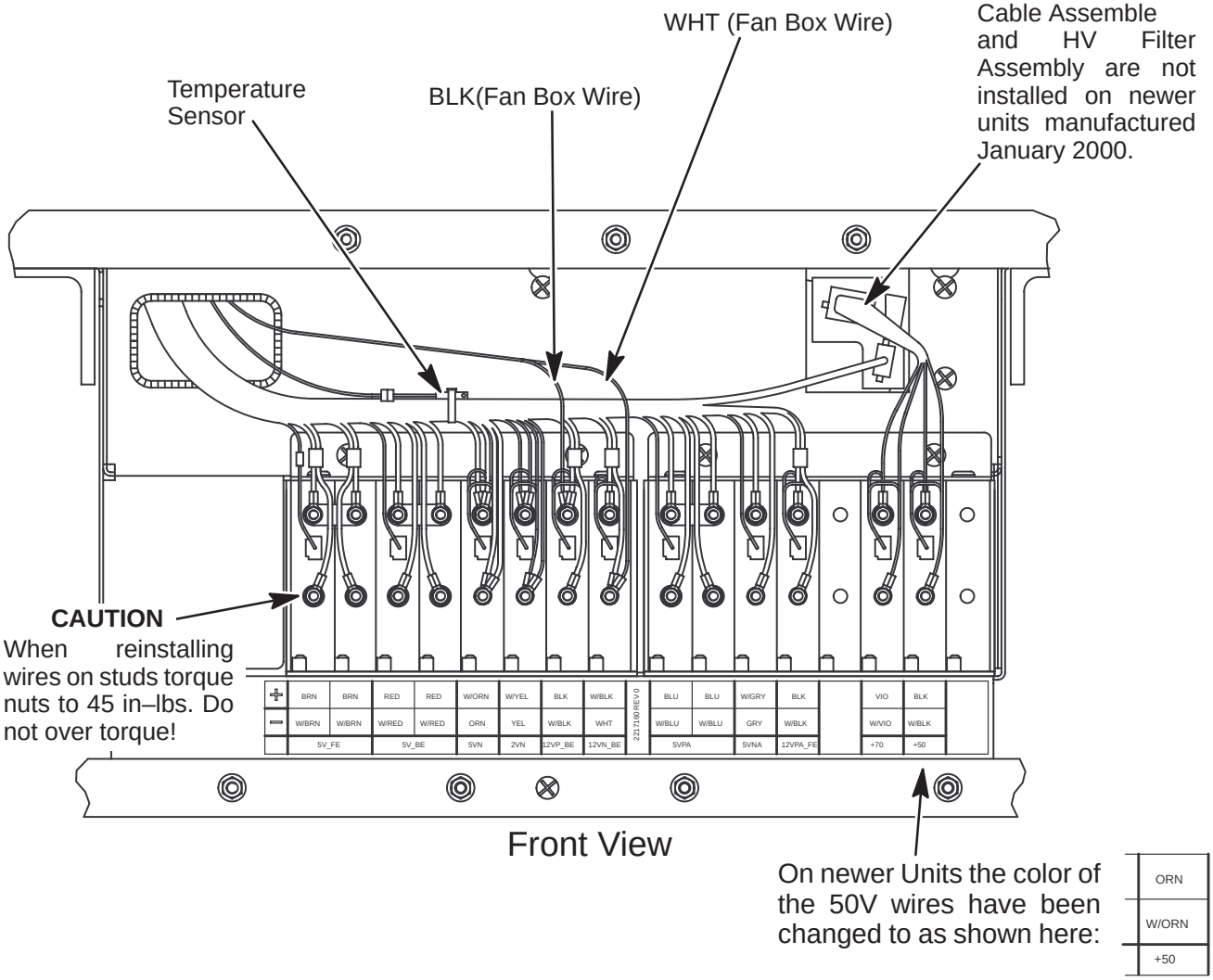

Front View

On newer Units the color of the 50V wires have been changed to as shown here:

ORN
W/ORN
+50

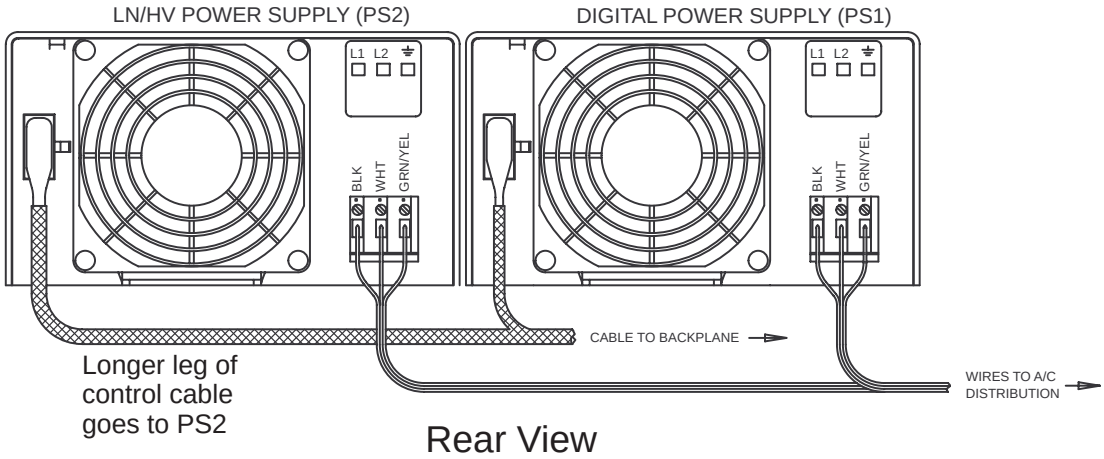

Rear View

POWER SUPPLY WIRING
ILLUSTRATION 7–10

7–3–6 Audio Components

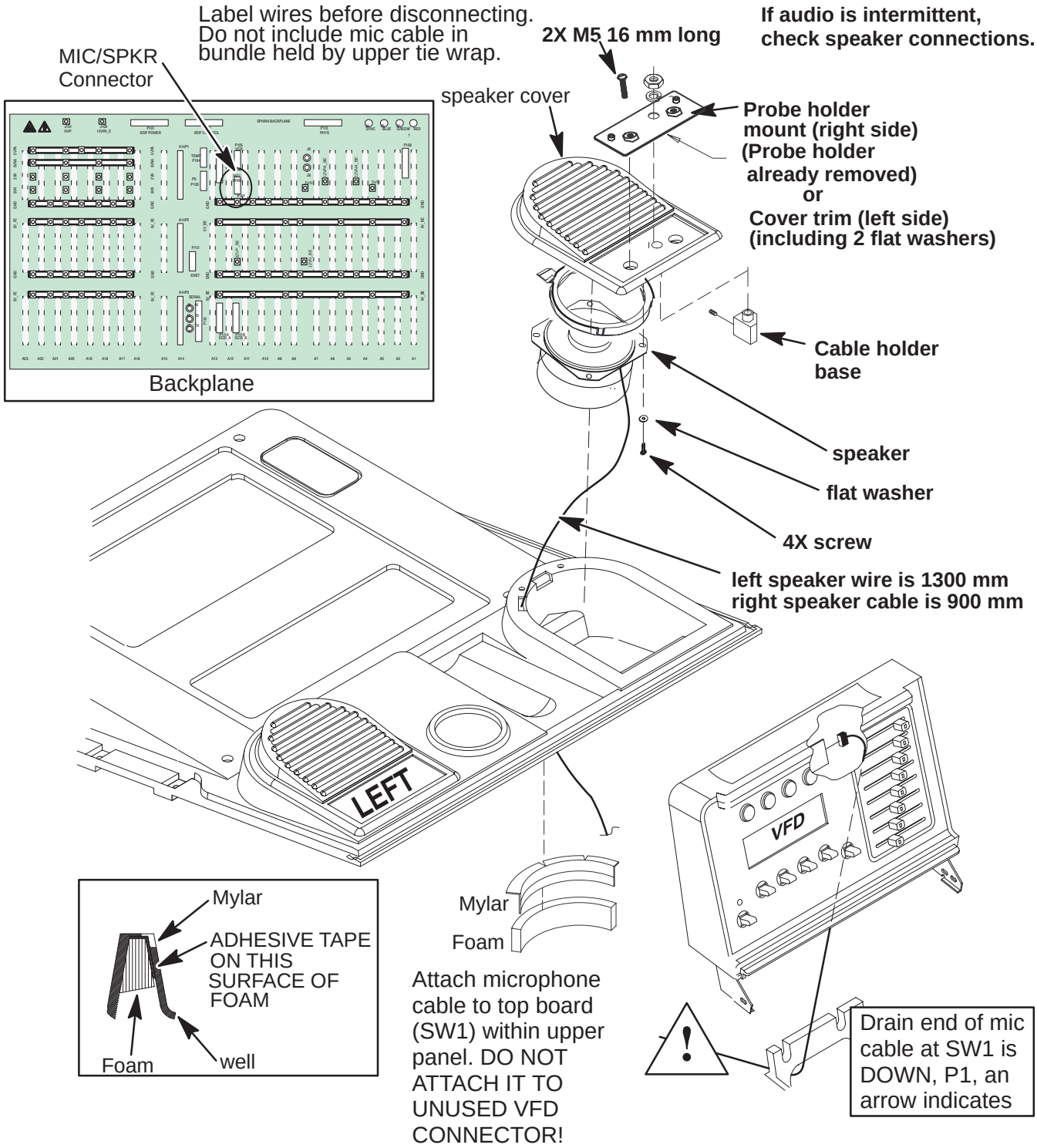

ASSEMBLY OF AUDIO COMPONENTS
ILLUSTRATION 7–11

7–3–7 RF Cables

To replace the RF cables, you must remove both side covers, both front covers, the control panel, the XDIF cover. An EMC shield covering the circuit cards must also be removed. Route cables as shown in Illustrations 7–12 and 7–13.

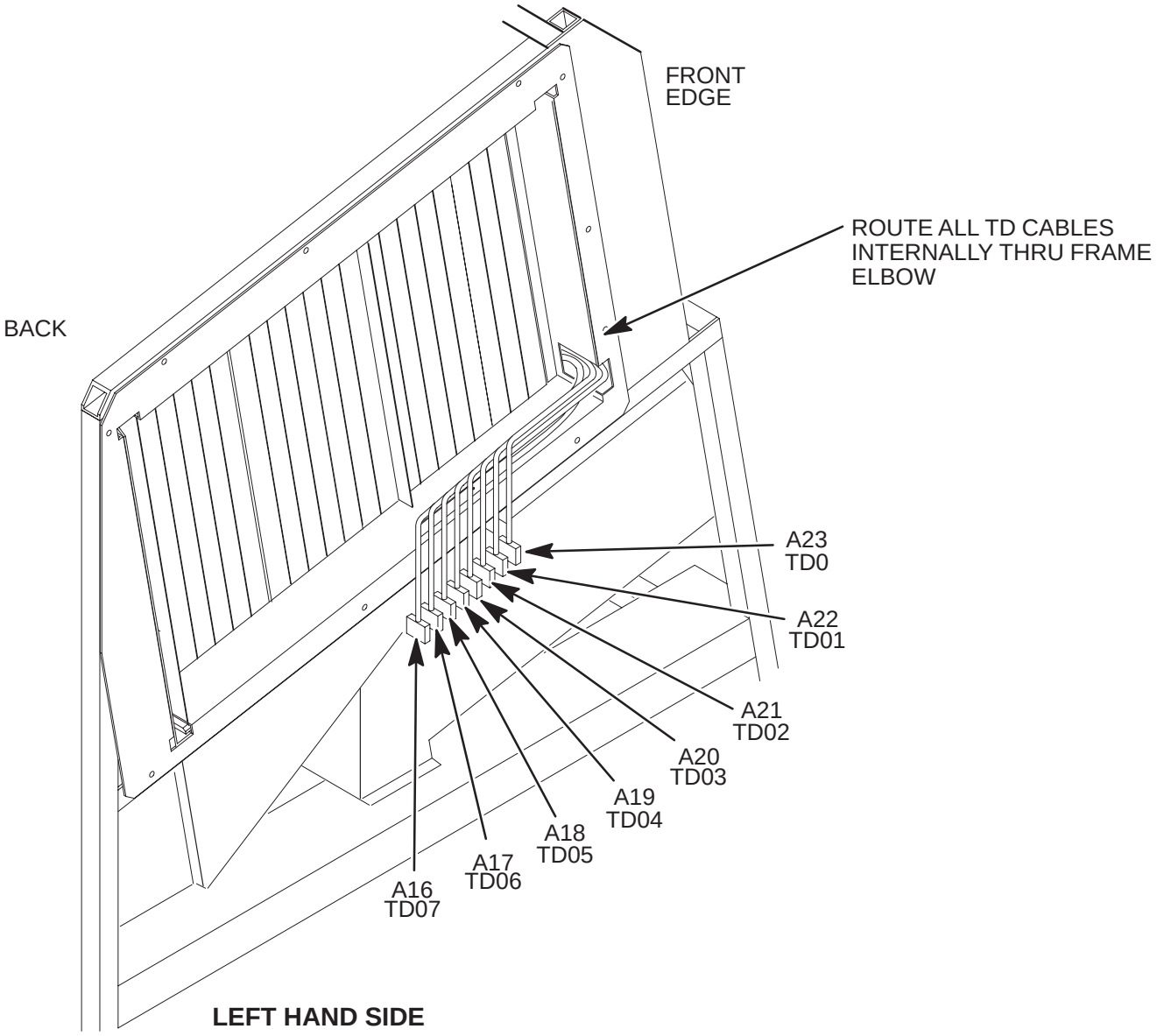

RF CABLE CONNECTIONS TO TD
ILLUSTRATION 7–12

7–3–7 RF Cables (Continued)

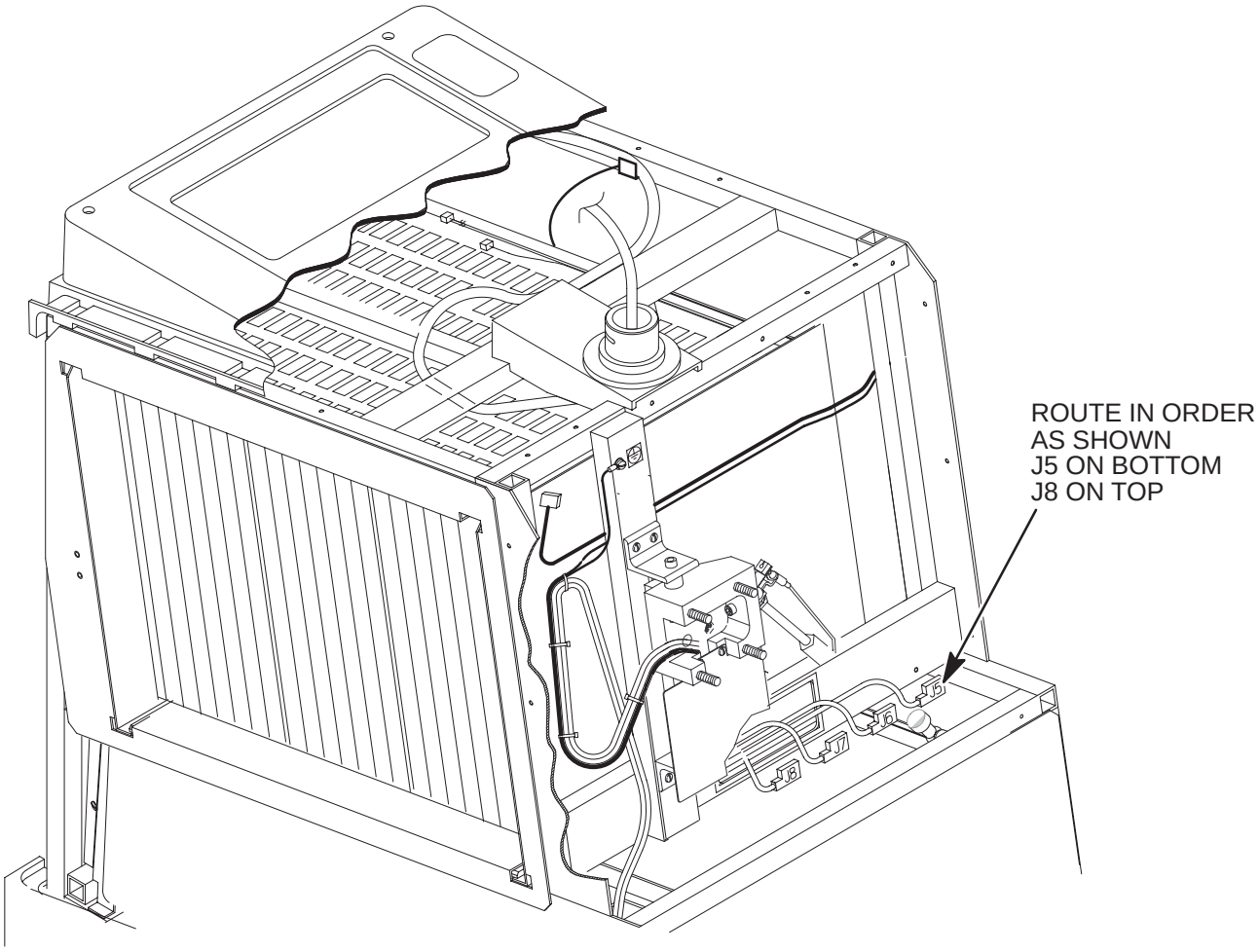

MAKE SURE RF CONNECTOR SPRINGS ARE FULLY EXTENDED WHICH MEANS THE CONNECTION IS TIGHT. THIS IS ESPECIALLY IMPORTANT ON J8

RF CABLE CONNECTIONS TO XDIF
ILLUSTRATION 7–13

7–3–8 Operator Panel

To remove the Operator Panel, first remove six screws and separate the Bottom Cover from the remainder of the Operation Panel. (See Illustration 7–14.) Then remove the four screws that secure the Upper Panel and disconnect the microphone cable from the SW1 card in the Upper Panel. Next, remove the turnbuckle bracket and disconnect cables from J1 and J4 of operation panel. (See Illustrations 7–15 and 7–16.)

To complete the removal, loosen the two upper M10 hex nuts and remove the two lower M10 hex nuts while guiding the slotted mounted bracket of the operation panel off the gas spring assembly.

During installation, check the alignment of the top edge of the Upper Panel to the top edge of the unit's upper front panel. Align the operation panel so these two edges are parallel. Then tighten the four M10 hex nuts to a torque of 48 Nm.

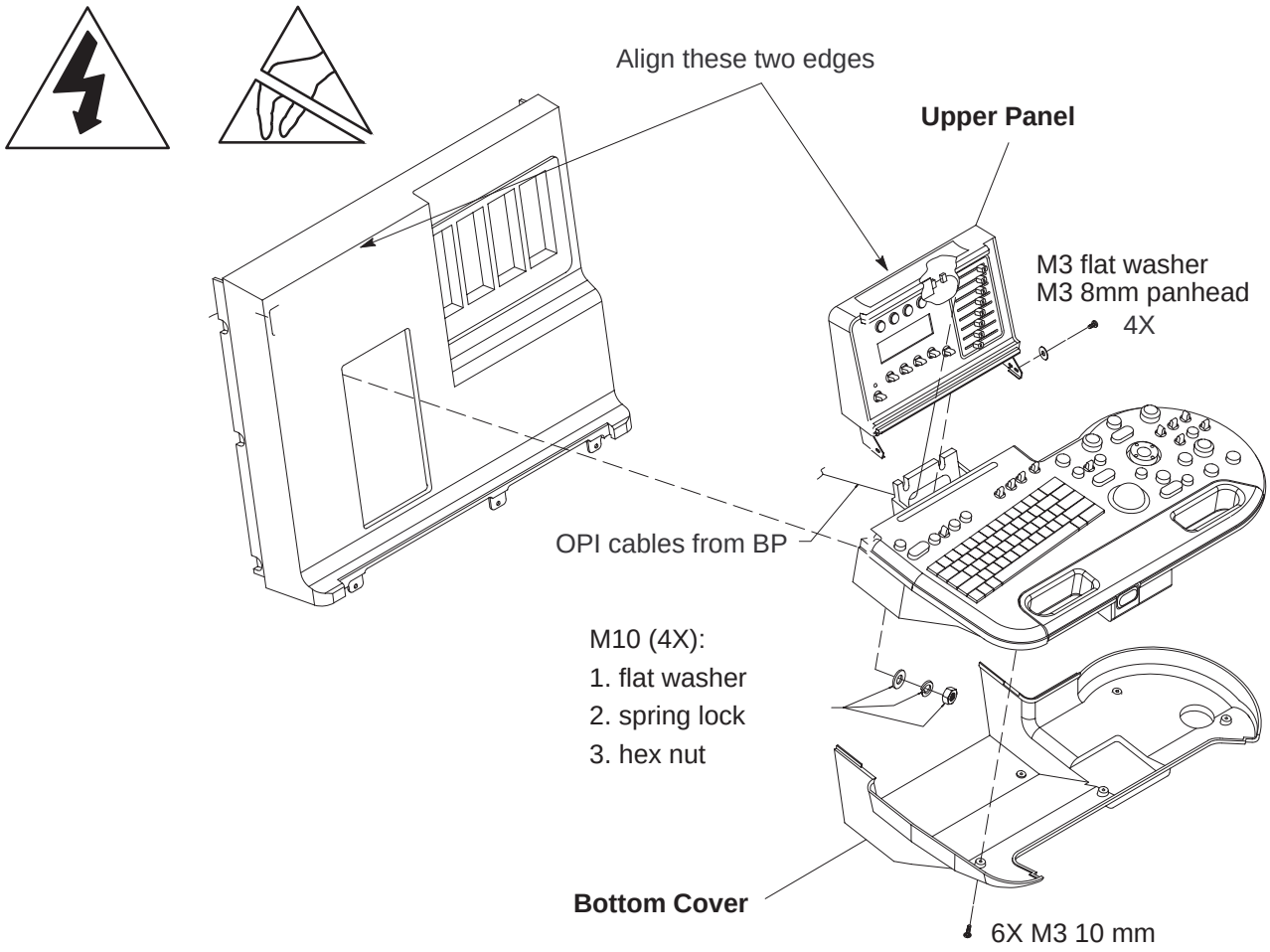

OPERATOR PANEL REMOVAL
ILLUSTRATION 7–14

7–3–8 Operator Panel (Continued)

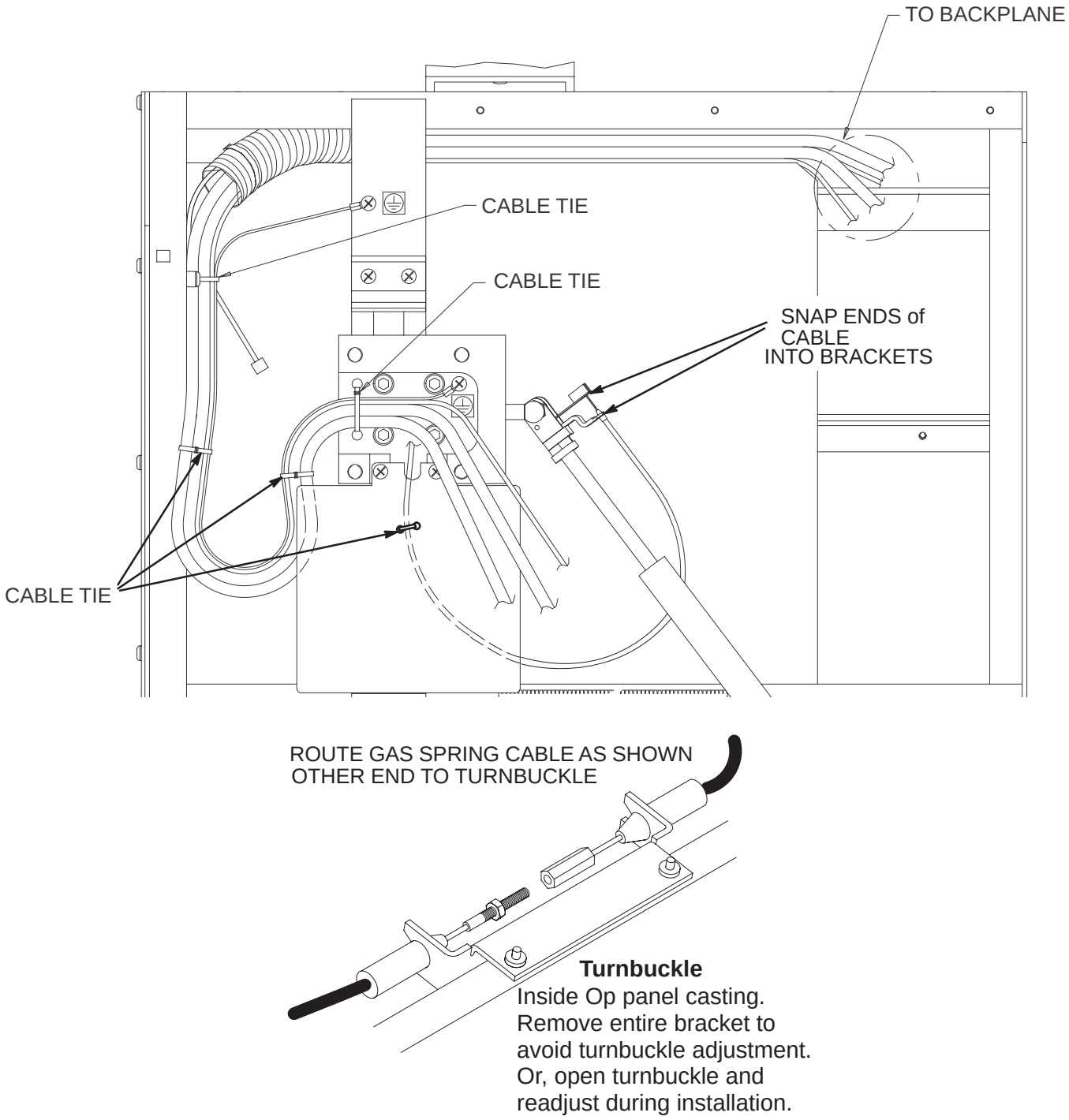

ROUTING CABLES FOR OPERATOR PANEL THROUGH GAS CYLINDER ASSEMBLY
ILLUSTRATION 7–15

7–3–8 Operator Panel (Continued)

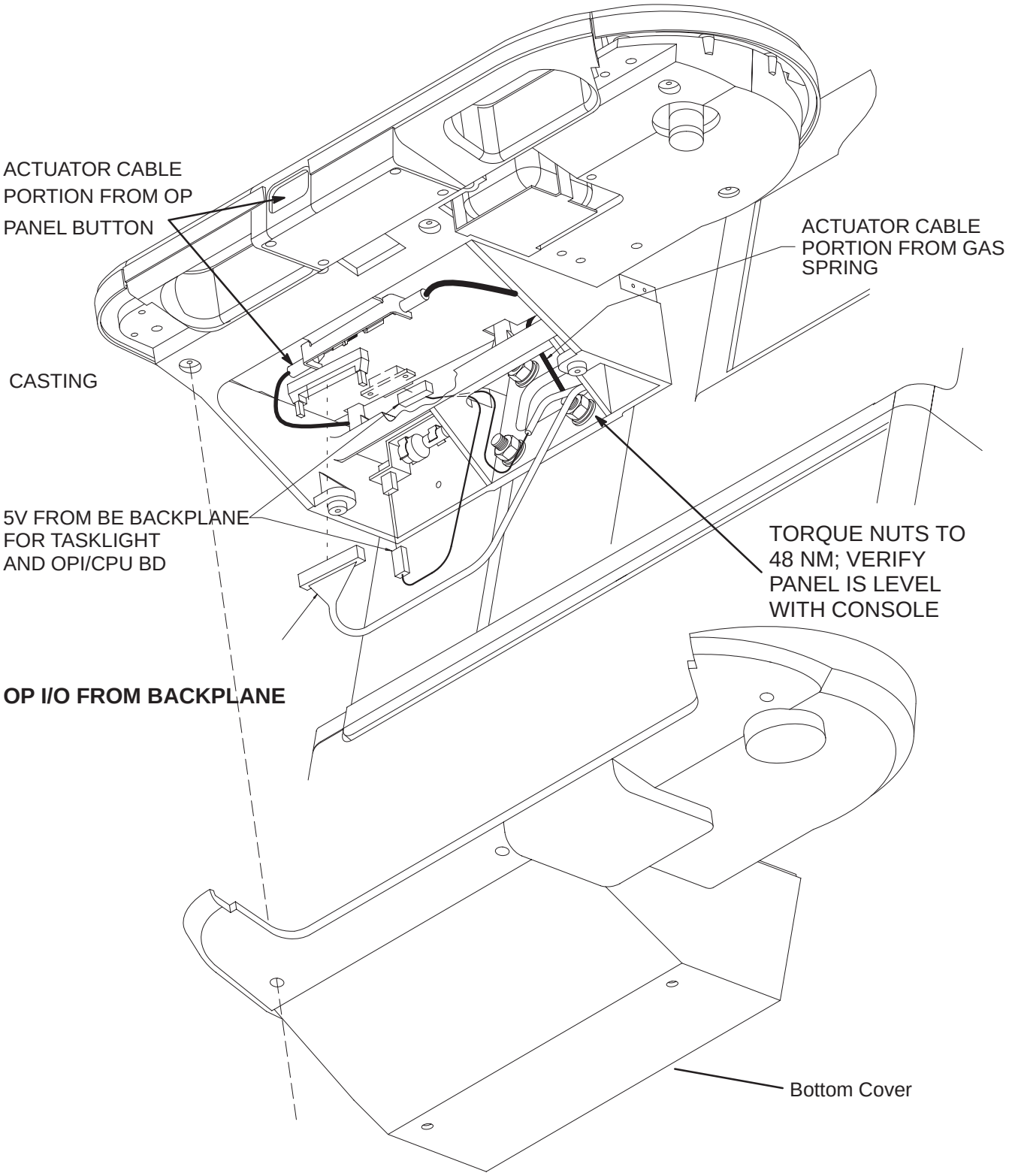

UNDERSIDE OF OPERATOR PANEL SHOWING CABLE ROUTING AND ATTACHING HARDWARE
ILLUSTRATION 7–16

7–3–9 Tasklight

Task lighting for the control panel is accomplished with a small lamp mounted to the casting of the lower control panel and a bundle of optic fibers to the top of the upper OPI assembly. The 5V digital power for the control panel comes from the Back End backplane: the small RED/BLK connector is attached to the OPI/CPU board at J1 and the GRN/WHT connector is attached at the tasklight lamp on the casting.

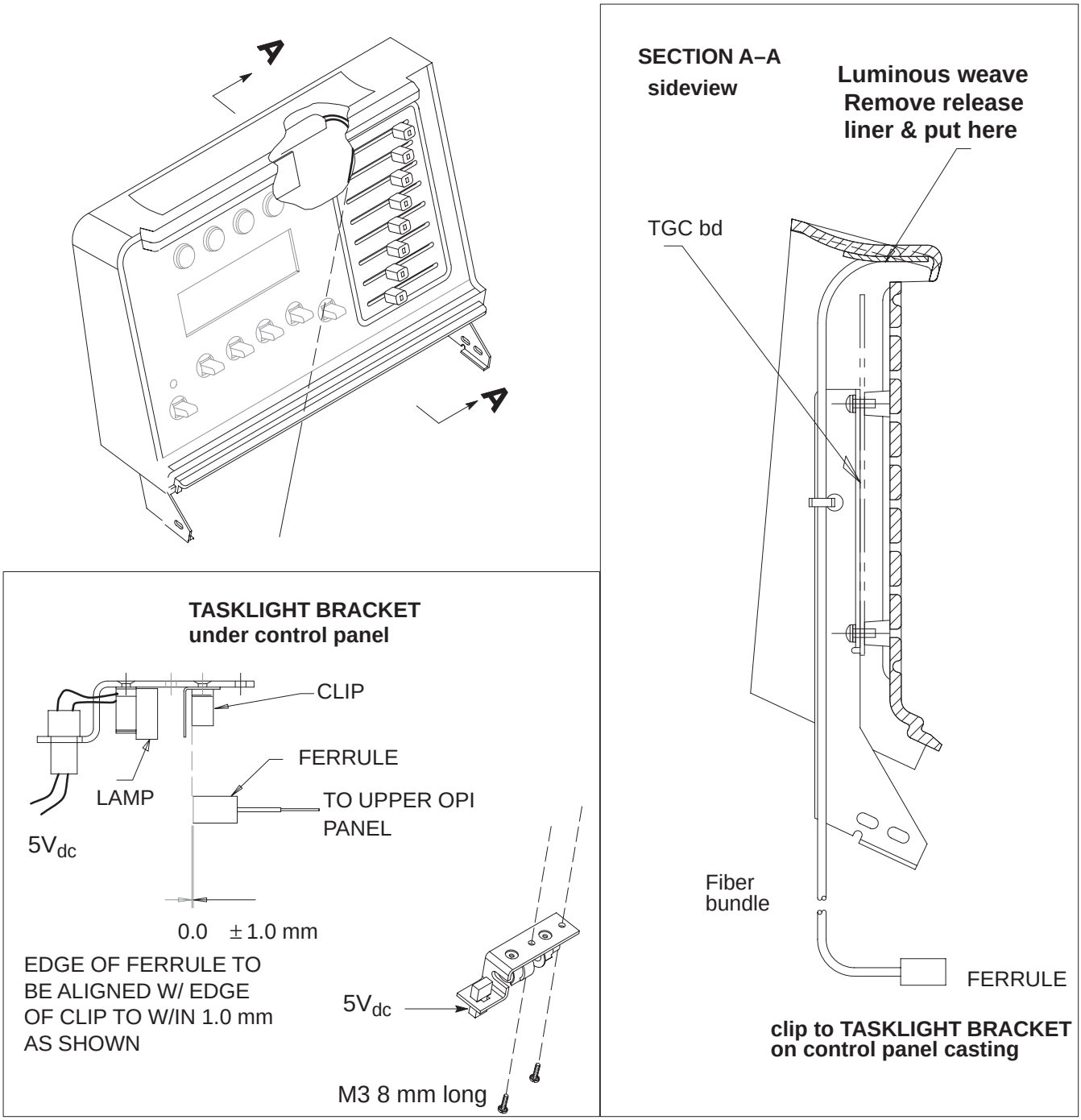

TASKLIGHT AND TASKLIGHT FIBER OPTIC CABLE REMOVAL
ILLUSTRATION 7–17

7–3–10 Monitor

WARNING **The monitor is heavy; about 15 kg (35 lbs). Two people may be required to lift and replace the monitor. Use proper lifting techniques.**

To access the monitor connections for removal, it is necessary to remove the right side panel. (See page 7–3.) To prepare monitor for removal: disconnect the monitor AC from the internal outlet board and nearby ground stud; disconnect the monitor RGBS BNCs from the BP; and free the cable from tie wraps. Remove the set screw bolt from the neck with an 8 mm nut driver or socket. Use a cable puller to fish the monitor cable through the LOGIQ™ 700 frame during removal and installation. Wrap power and signal connectors of the old monitor into the cable puller; either end will work. Lift monitor, gently pulling cables out of the neck, until near end of cable puller is accessible. Unwrap connectors, leaving cable puller within unit frame.

CAUTION **Take care not to scratch the hub on the console with the set screw; scratches cause binding when the user rotates the monitor.**

To install new monitor, place bushing inside hub and install setscrew just deep enough to retain bushing. Wrap monitor connectors in upper end of cable puller and pull lower end of cable puller to fish cable back through the frame. Install monitor atop unit, tighten setscrew, reconnect monitor signal and power connectors, and reinstall cable ties.

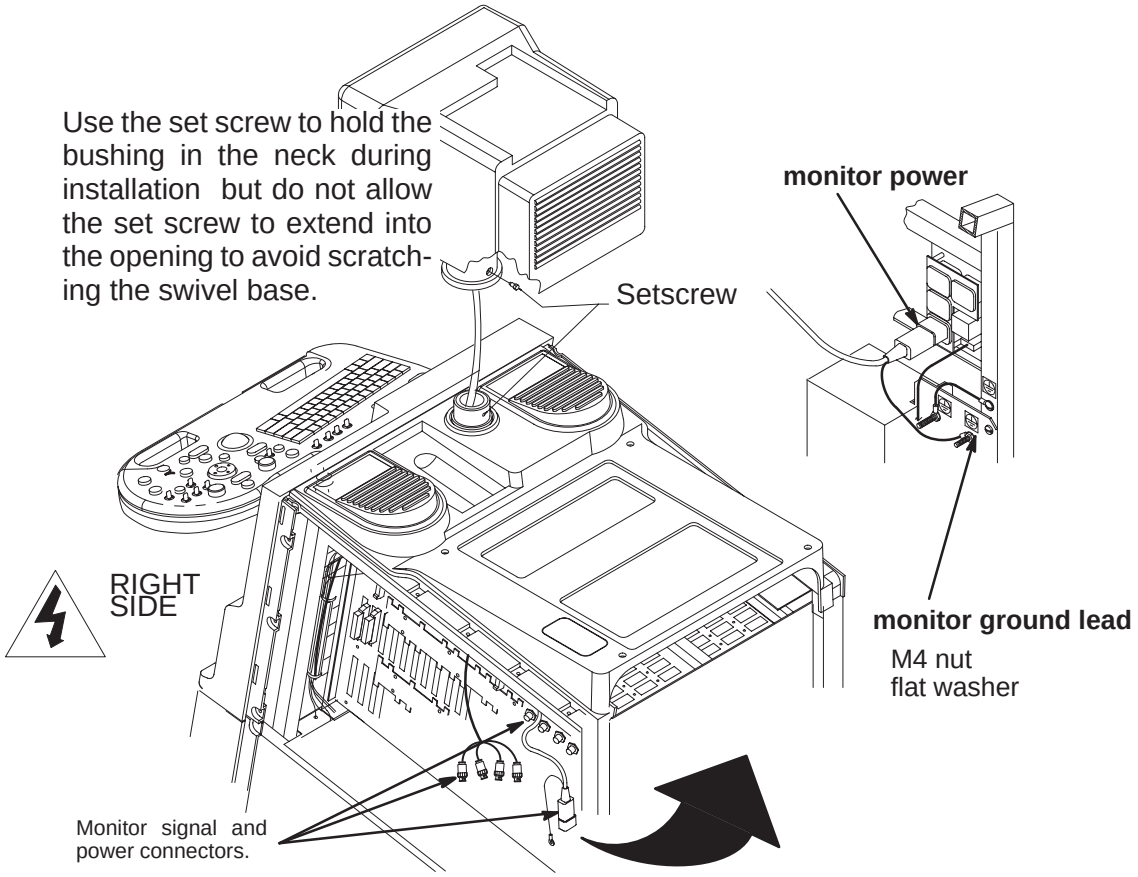

MONITOR REMOVAL
ILLUSTRATION 7–18

7–3–11 TD Boards

There are several different versions of TD boards that will work on the units covered in this manual. But, due to configuration differences between 2218096–4 TD boards and 2237439–4 TD boards they are not completely compatible when used together (image artifacts may occur). If a unit contains mixed TD boards ensure that TD boards with a 2218096–4 part number are installed next to each other in the slots closest to the EQ board.

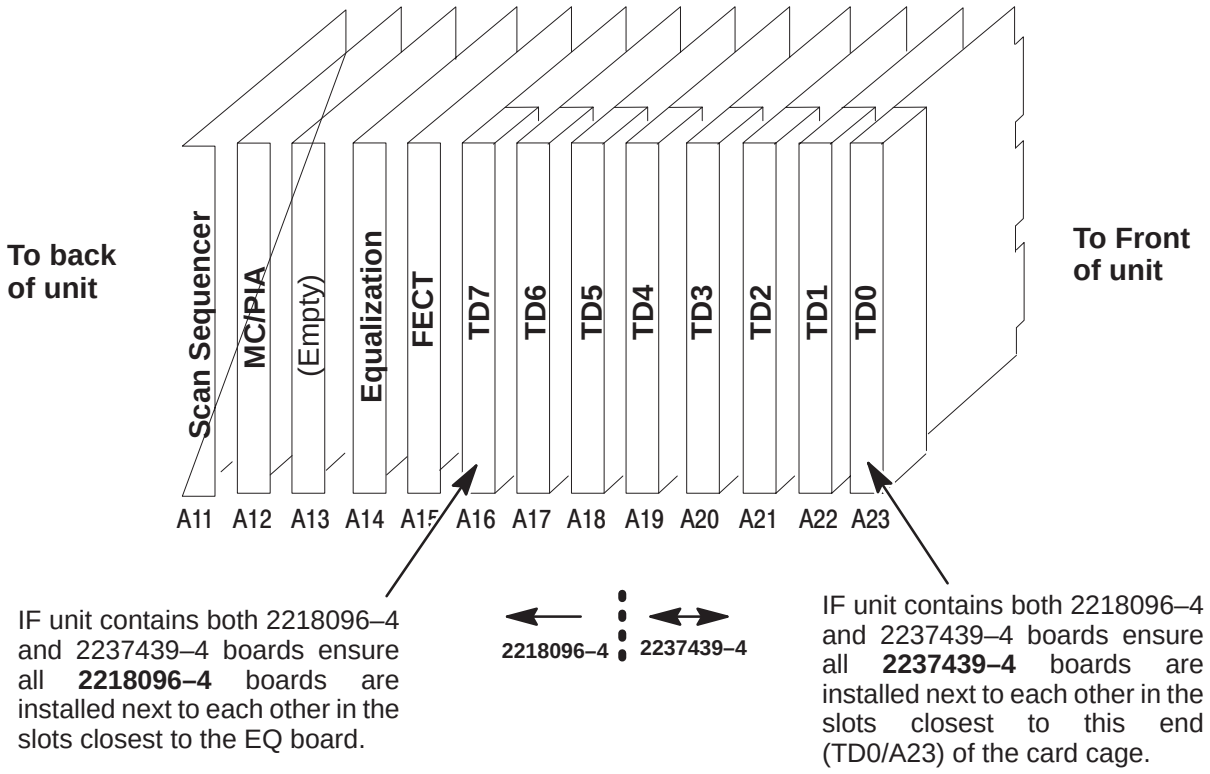

LEFT HAND SIDE OF UNIT

TD BOARD INSTALLATION
ILLUSTRATION 7–19

Section 7-1
Jumpers

Jumpers are used in the LOGIQ™ 700 to compensate for configuration differences. These jumpers are installed on many of the system components. (See Table 7-1for a list of components with jumpers and the illustrations that show the jumper locations.) When installing one of these components, ensure that the jumpers are properly installed by comparing the jumper connections to the those shown in the supporting illustrations.

Table 7-1 LOGIQ™ 700 COMPONENTS WITH JUMPERS (OR DIP SWITCHES)

Component			See Illustration
Name	**Designator**	**Model (or Part No.)**	
Solid State Relay Board	SSR	All	Figure 7-20
Master Controller Board	MC/PIA	All	Figure 7-21
Backplane	BP	All	Figure 7-22
Hard Drive	- -	Seagate	Figure 7-23
Magneto Optical Drive	MOD	Fujitsu M2513A	Figure 7-24
Magneto Optical Drive	MOD	Fujitsu MCC3064SS	Figure 7-25
Magneto Optical Drive	MOD	Fujitsu MCF3064SS	Figure 7-25A
Transducer Interface Board	XDIF	(2132588)	Figure 7-26

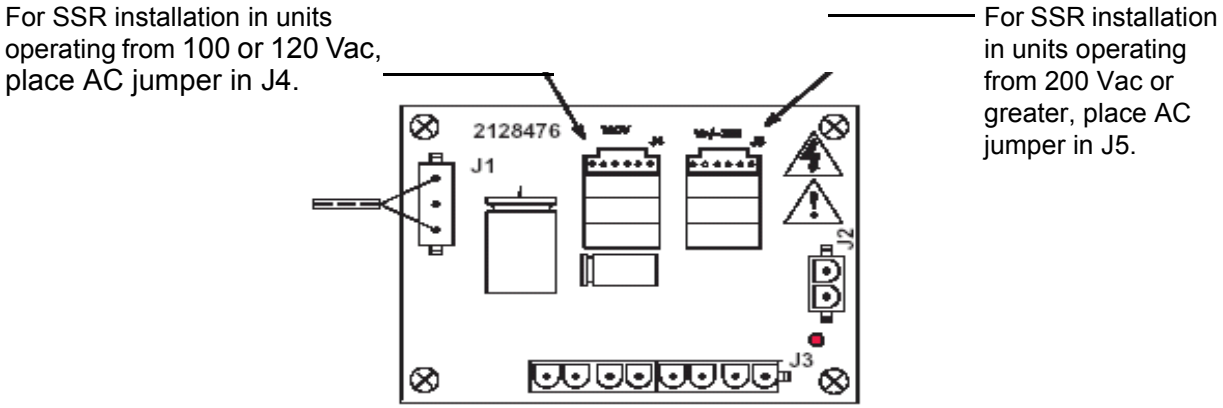

Figure 7-20 SSR JUMPER INSTALLATION

Section 7-1 Jumpers (cont'd)

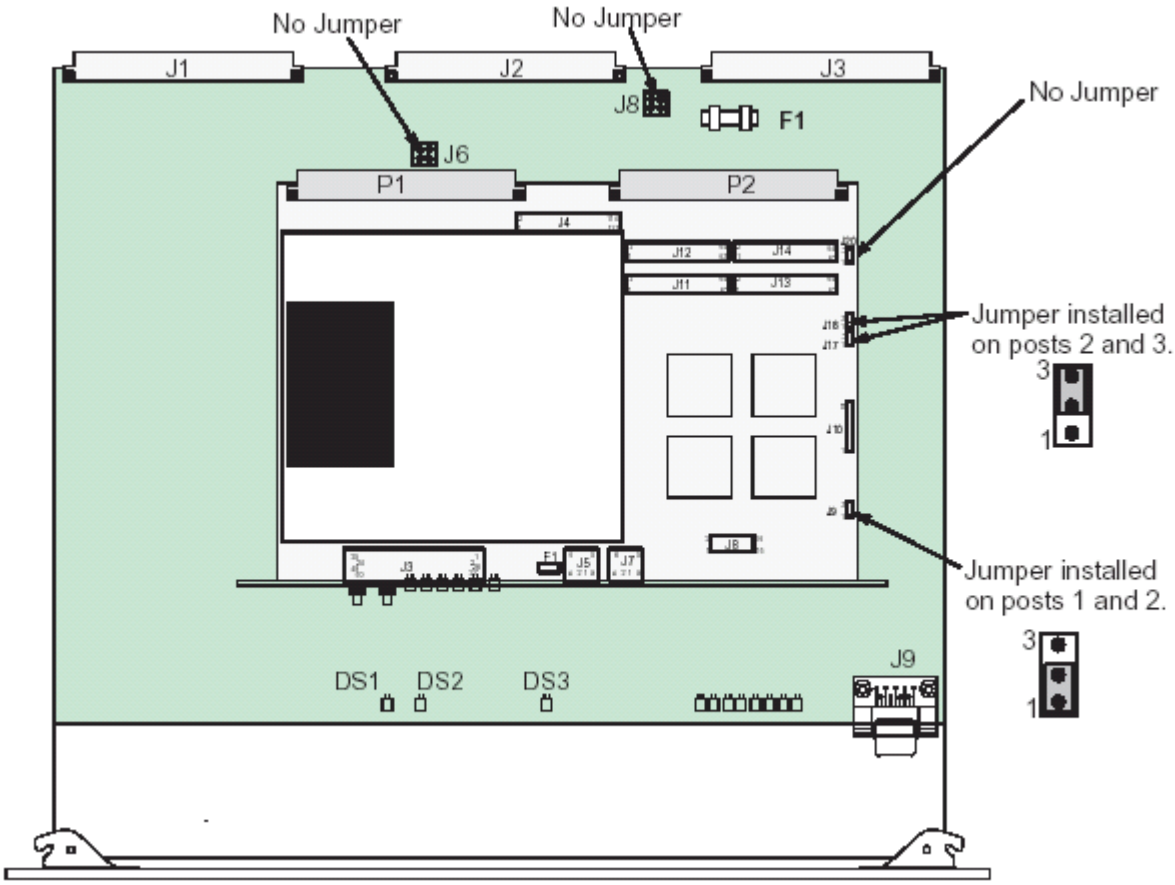

Figure 7-21 Jumper Installation on MC Board

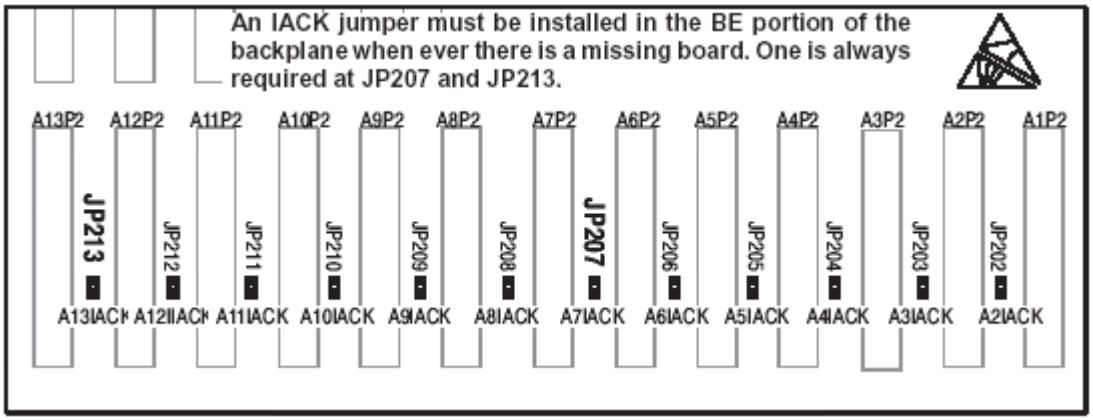

Figure 7-22 IACK Jumper Installation on Backplane

Section 7-1 Jumpers (cont'd)

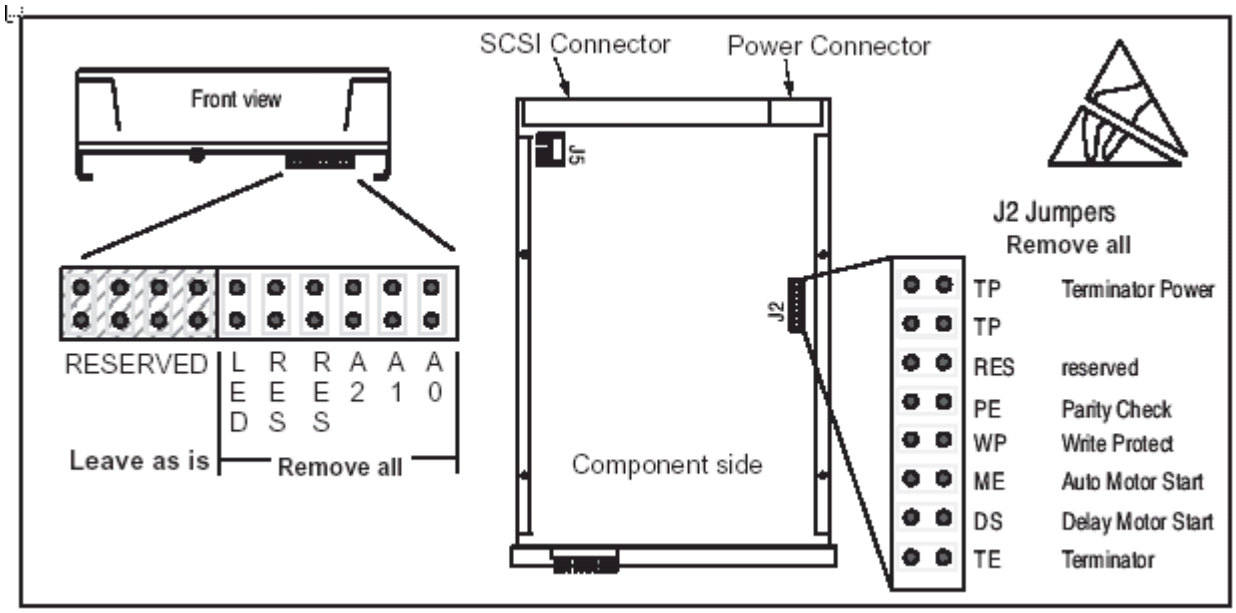

Figure 7-23 Jumper Installation on Seagate Hard Drive

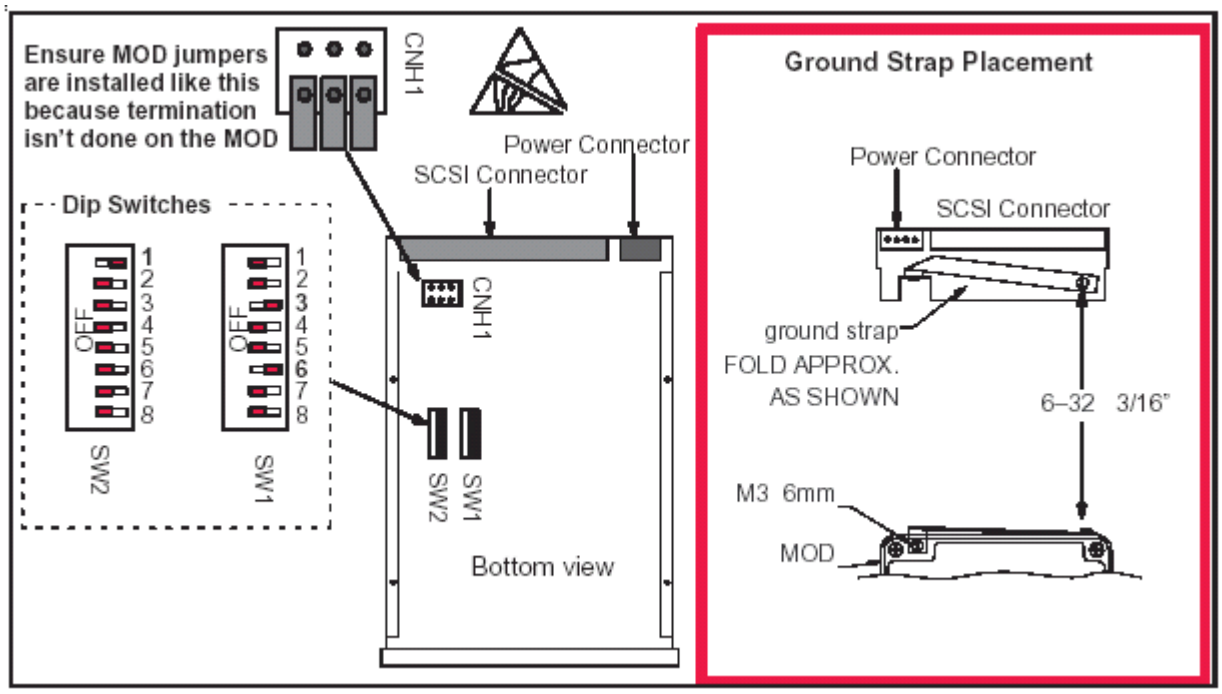

Figure 7-24 Jumper Installation on FUJITSU M2513A MODs

Section 7-1 Jumpers (cont'd)

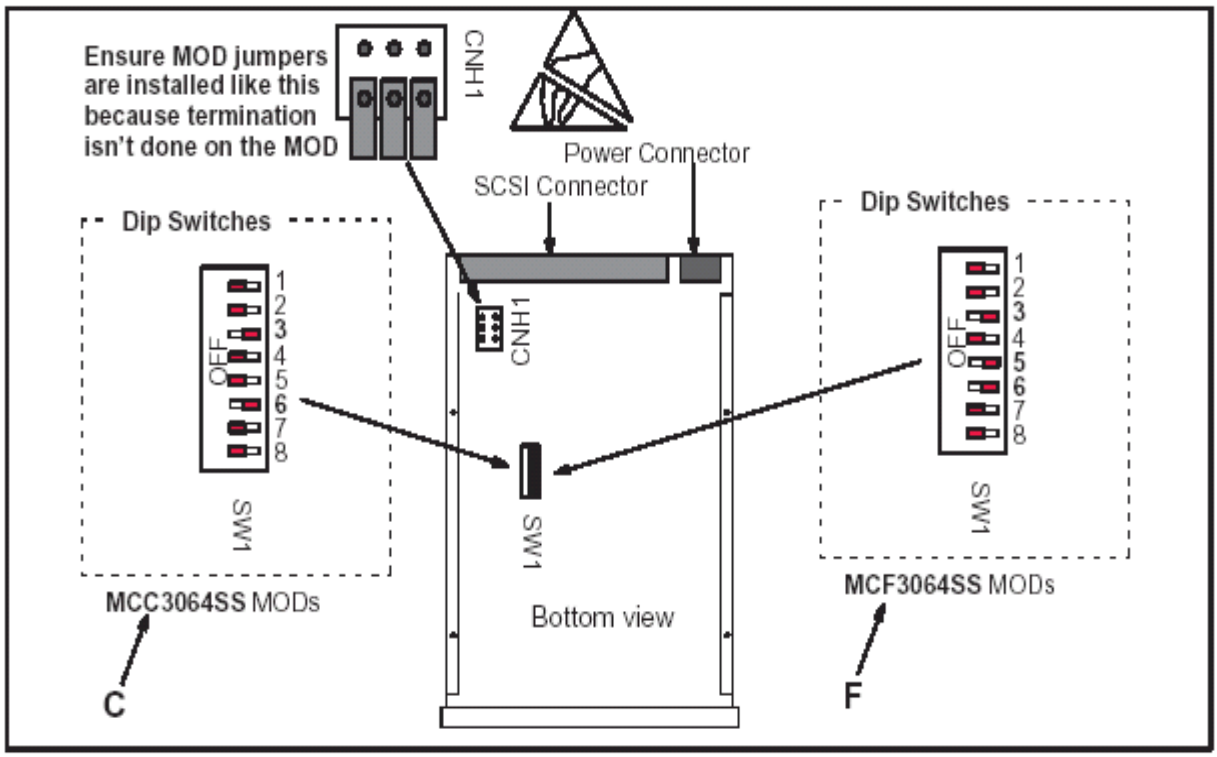

Figure 7-25 Jumper Installation on Fujitsu MCC3064SS and MCF2064SS MODs

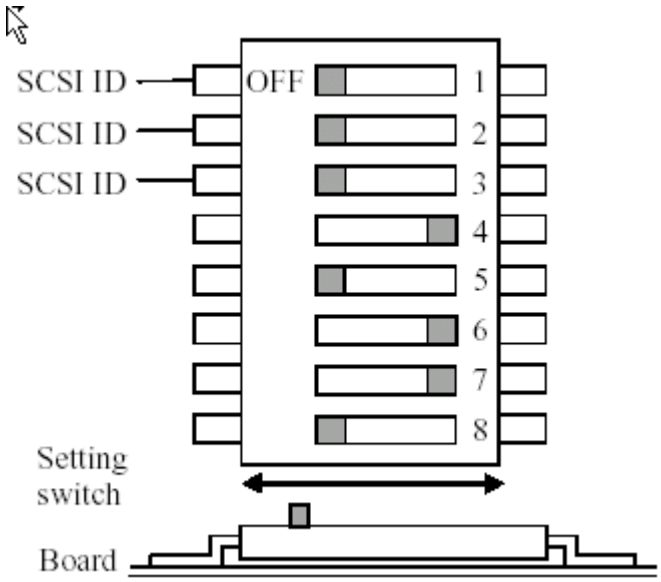

Figure 7-25A Dip Switch settings on Fujitsu MCM3064SS MODs

Section 7-1 Jumpers (cont'd)

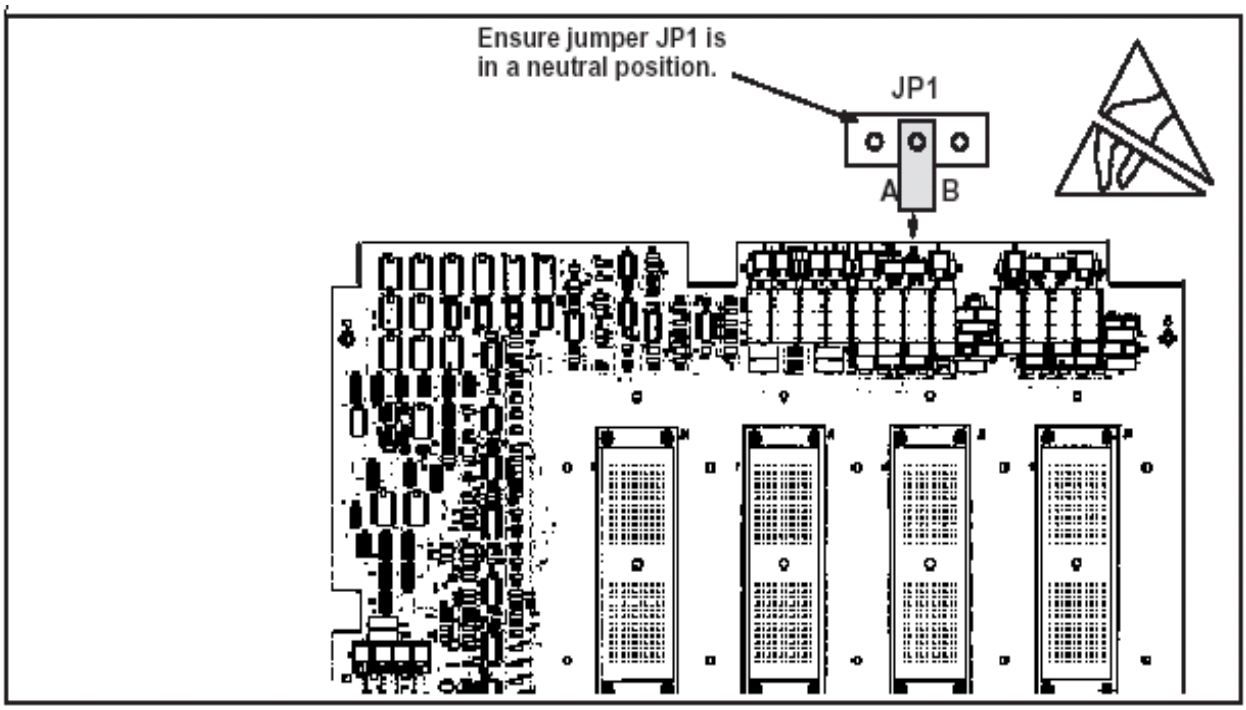

Figure 7-26 Jumper Installation on XDIF

SECTION 8 – SYSTEM PERFORMANCE AND MESSAGES

TABLE OF CONTENTS

SECTION	TITLE	PAGE
8–1	PURPOSE OF SECTION	8–2
8–2	MECHANICAL PERFORMANCE	8–3
8–2–1	Checking Brakes	8–3
8–2–2	Checking Monitor Tilt	8–4
8–2–3	Checking Gas Spring	8–5
8–2–4	Checking Operator Controls	8–5
8–2–5	Checking Key Cap Wobble	8–5
8–3	POWER PERFORMANCE	8–6
8–3–1	Checking System Power	8–6
8–3–2	Checking SCSI Power	8–9
8–4	SYSTEM TIMING PERFORMANCE	8–9
8–4–1	Checking 40 MHz and 10 MHz Clocks	8–9
8–5	MONITOR PERFORMANCE	8–10
8–5–1	Checking/Adjusting Monitor	8–10
8–5–2	Troubleshooting Monitor Problems	8–10
8–5–3	Adjusting Monitor Brightness for MR Imaging	8–12
8–6	IMAGE PERFORMANCE	8–13
8–6–1	ElectroMagnetic Interference Causes Poor Image Quality	8–13
8–6–2	Other Causes of Poor Image Quality	8–13
8–7	VIDEO OUTPUT PERFORMANCE	8–14
8–8	AUDIO OUTPUT PERFORMANCE	8–17
8–9	LED INDICATORS	8–18
8–9–2	XY and SS LED Indicators	8–19
8–9–3	MC LED Indicators	8–20
8–9–4	MVME2700 LEDs	8–21
8–10	CONTROL PANEL SELF–TEST	8–22
8–11	SYSTEM MESSAGES	8–27
8–11–1	Print or Beep	8–27
8–11–2	Warning Messages	8–27
8–11–3	Error Logs	8–27
8–11–4	Peripherals	8–27
8–11–5	Disruptive Mode	8–27

8–1 PURPOSE OF SECTION

This section describes how to check and adjust the performance of the unit. Also included is a description of the system error messages. These messages appear on the monitor, the VFD if application software is not yet up, and in the Error Log.

Turn power OFF before you pull or insert boards.

Practice good ESD prevention when you disconnect or attach cables to the unit. A ground strap around your wrist, clipped to the ground stud or plug, should prevent large electrical potential discharges into the circuit boards. Refer to page Section 1 for more information about ESD prevention.

Note

For EMC compliance, It is critical that all covers, screws, shielding, mesh, EMI cores, and gaskets are correctly and tightly installed. If imaging performance is noisy, ensure that these items are properly installed.

Note

Keep intake and power supply fan filters clean. Only operate the system with all covers installed. Removing covers will not correct a room over–temperature condition. In fact, removing covers interrupts the cooling air flow necessary to prevent over–temperature conditions.

Note

If the unit stops working, either the system has detected an over temperature condition (which could be the result of faulty system interactions) or the clocks or key power levels have failed.

Note

Begin troubleshooting the cause of a unit shutdown before rebooting. Measure power outputs, note the condition of the LEDs on the BE boards, check the display on the VFD, and determine whether the system time is still incrementing on the image monitor. These checks provide clues to the cause of the problem.

After recycling power, watch the VFD display for messages, ensure the operator panel buttons light, and verify that the system starts imaging. If possible, enter diagnostics and review the Temperature Log and Error Log. Also, review the Power Up Logs for a signs of a faulty boot up.

8–2 MECHANICAL PERFORMANCE

8–2–1 Checking Brakes

Check the stopping distance of the brakes:

1 . From a walking speed (about 3 km/hr) apply the brakes.

2 . On a level vinyl surface, the unit should come to a complete stop within 5 meters. If not, check the caster and adjust as shown below:

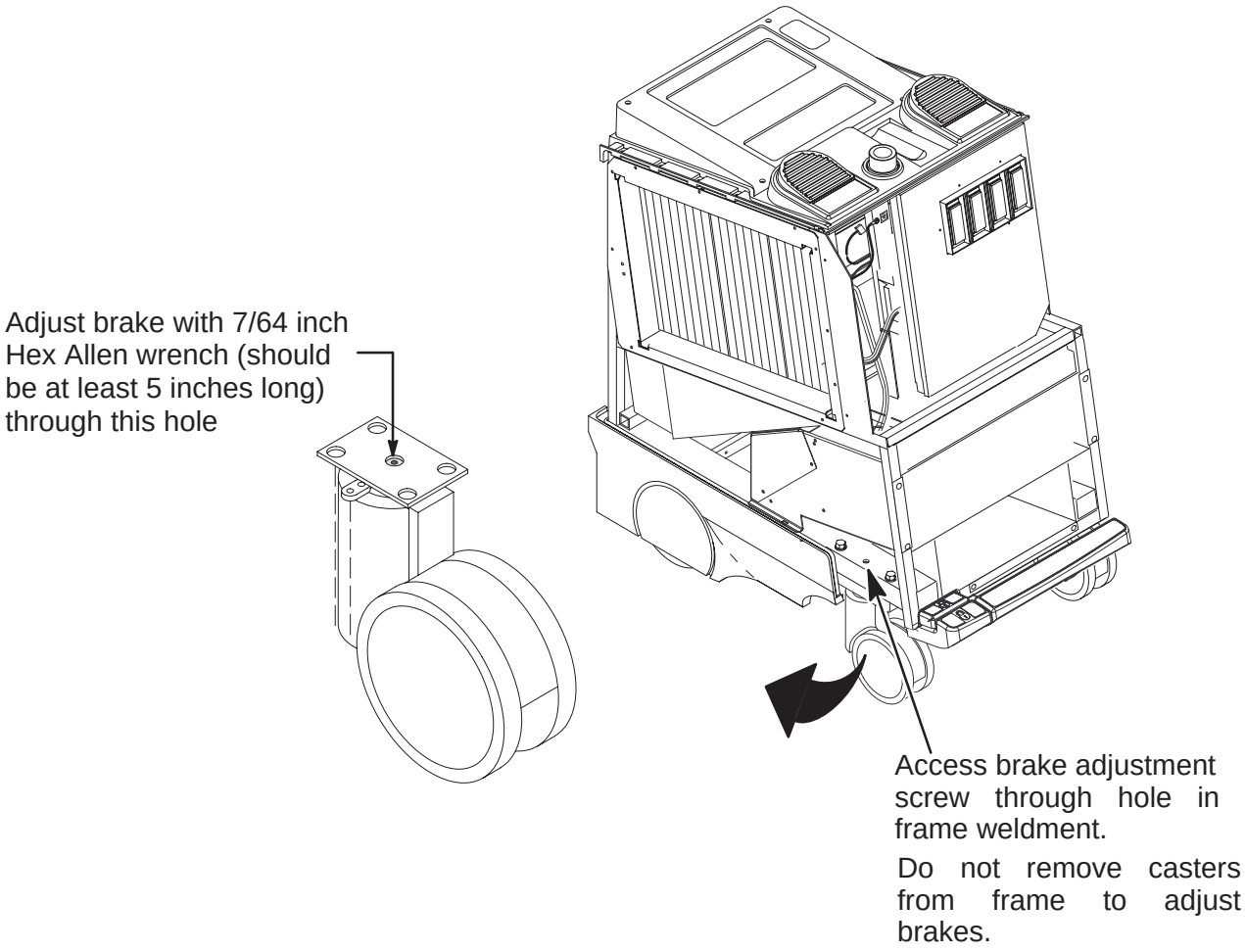

BRAKE ADJUSTMENT OF FRONT WHEEL ASSEMBLY
ILLUSTRATION 8–1

8–2–2 Checking Monitor Tilt

The tilt mechanism can be adjusted to prevent the monitor from hitting the speakers. However, it may not be possible to prevent the monitor from hitting on board peripherals (if any are installed on top of unit) when the monitor is tilted and swiveled to either side.

If the tilt mechanism needs to be tightened, perform the following steps:

1. Note the positions of the Brightness and Contrast knobs and then remove them from the monitor using .05 inch allen wrench.

2. Remove two rear screws and slide monitor cover off of monitor.

3. Adjust tension screw to restrict monitor movement. Do not over tighten tension screw.

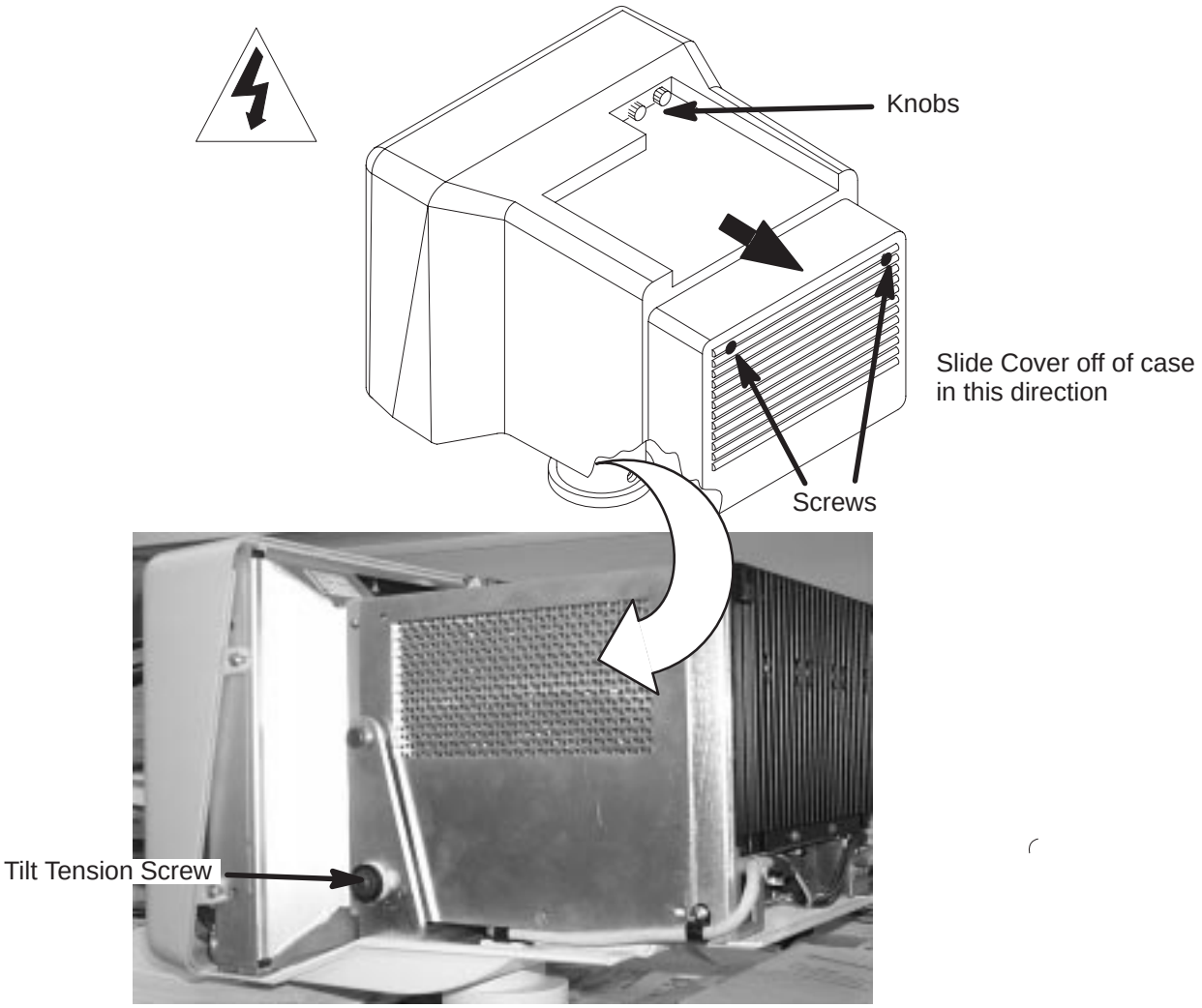

REMOVAL OF MONITOR
ILLUSTRATION 8–2

8–2–3 Checking Gas Spring

Check the gas spring operation as follows:

1 . Press the release button on the front edge of the operator control panel. The gas spring should be able to move freely before the button is pushed **20 mm**. Pressing the button more than this amount may cause damage to the linkage or gas spring, and if the lock mechanism is not released at this point, it is considered out of adjustment or damaged.

2 . With the release button depressed, move the OP Panel up and down. The gas spring should counter balance the weight of the Op Panel and control the up/down speed. A gas spring in good condition has enough force to slowly lift the Op Panel.

3 . Check the ability of the Op Panel to be moved and set at positions throughout the normal range of travel by depressing the release button, moving the OP Panel, and then releasing the button. The Op Panel should move smoothly from position and position and lock at any point. The gas spring should also have a “soft lock” which allows a few millimeters of travel up and down around the set position.

4 . Whenever the front covers are off, check the mechanical connection of the gas spring to the linear bearing. To prevent damage, the connection should be tight.

8–2–4 Checking Operator Controls

To check the footswitch (if present), lamps, VFD pixels, keyboard buttons, switches, slide pots, rotary encoders, trackball, invoke the Control Panel’s Self Test:
Refer to page 8–22 for a complete test.

1 . Press and hold both the **[X]** and **[C]** keys while power is turned ON. Hold these keys down for about two seconds. If successful, the lamps and VFD pixels will flash ON, dim, go out then repeat the cycle allowing visual checks to determine if a lamp or VFD pixel is not working.

2 . When the lamp and VFD pixel check is complete, press and hold the **[X]** and **[C]** keys again. Operate the keyboard buttons, switches, slide pot, rotary encoder, and trackball. If these components work, each will produce a unique response that appears as text in the softkey display.

3 . Press and hold the **[X]** and **[C]** keys again when ready to exit.

8–2–5 Checking Key Cap Wobble

The wide key caps on the control panel keyboard have a metal stabilizer bar that inserts into the ends of the cap and is latched into the two bases for that key. If the bar becomes unlatched from the bases, the key will wobble.

8–3 POWER PERFORMANCE

8–3–1 Checking System Power

The only way to recover from an overcurrent fault is by cycling power on the system. Remember to wait at least 10 seconds between OFF and ON.

Measure the power supply output voltages shown in Illustration 8–3. They may also be measured at the backplane. (See Illustration 8–4.)

WARNING **ELECTRICAL HAZARD: High current power even at 5 volts can cause welding of leads, jewelry or other conductive materials!**

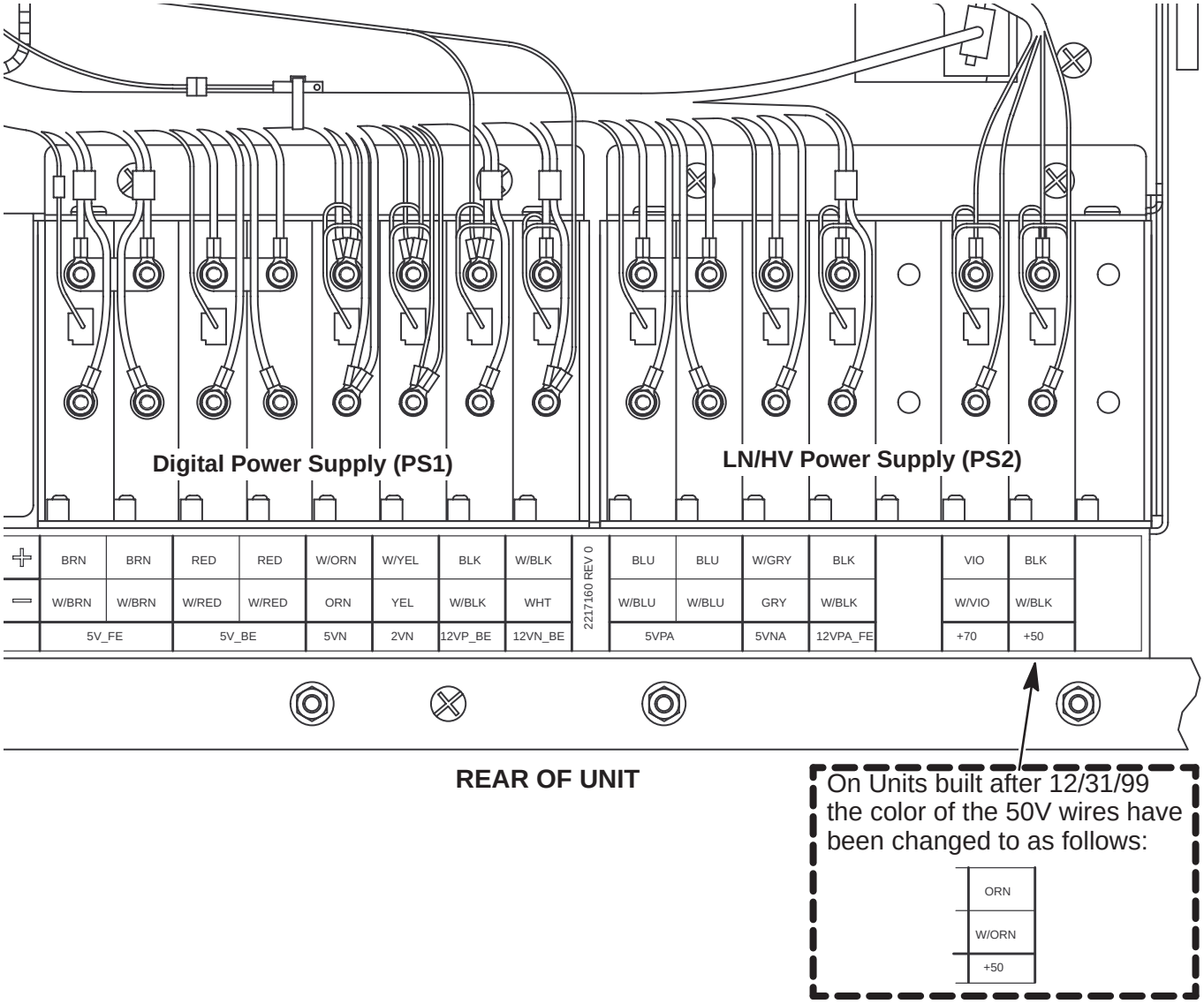

SYSTEM POWER AT POWER SUPPLIES
ILLUSTRATION 8–3

8–3–1 Checking System Power (Continued)

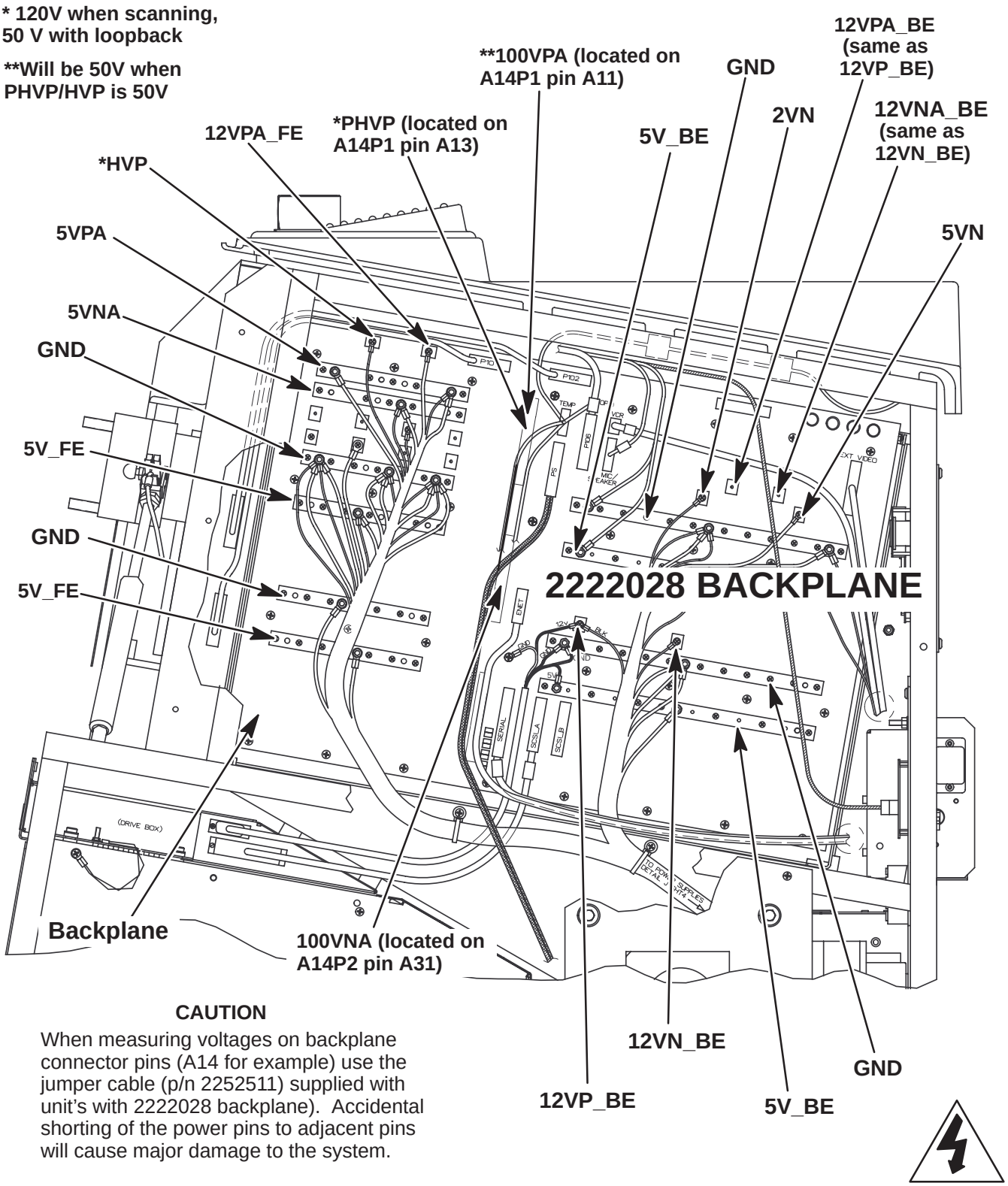

CAUTION

When measuring voltages on backplane connector pins (A14 for example) use the jumper cable (p/n 2252511) supplied with unit's with 2222028 backplane). Accidental shorting of the power pins to adjacent pins will cause major damage to the system.

SYSTEM POWER DESTINATIONS ON BACKPLANES WITH 2222028 PART NUMBER
ILLUSTRATION 8–4

8–3–1 Checking System Power (Continued)

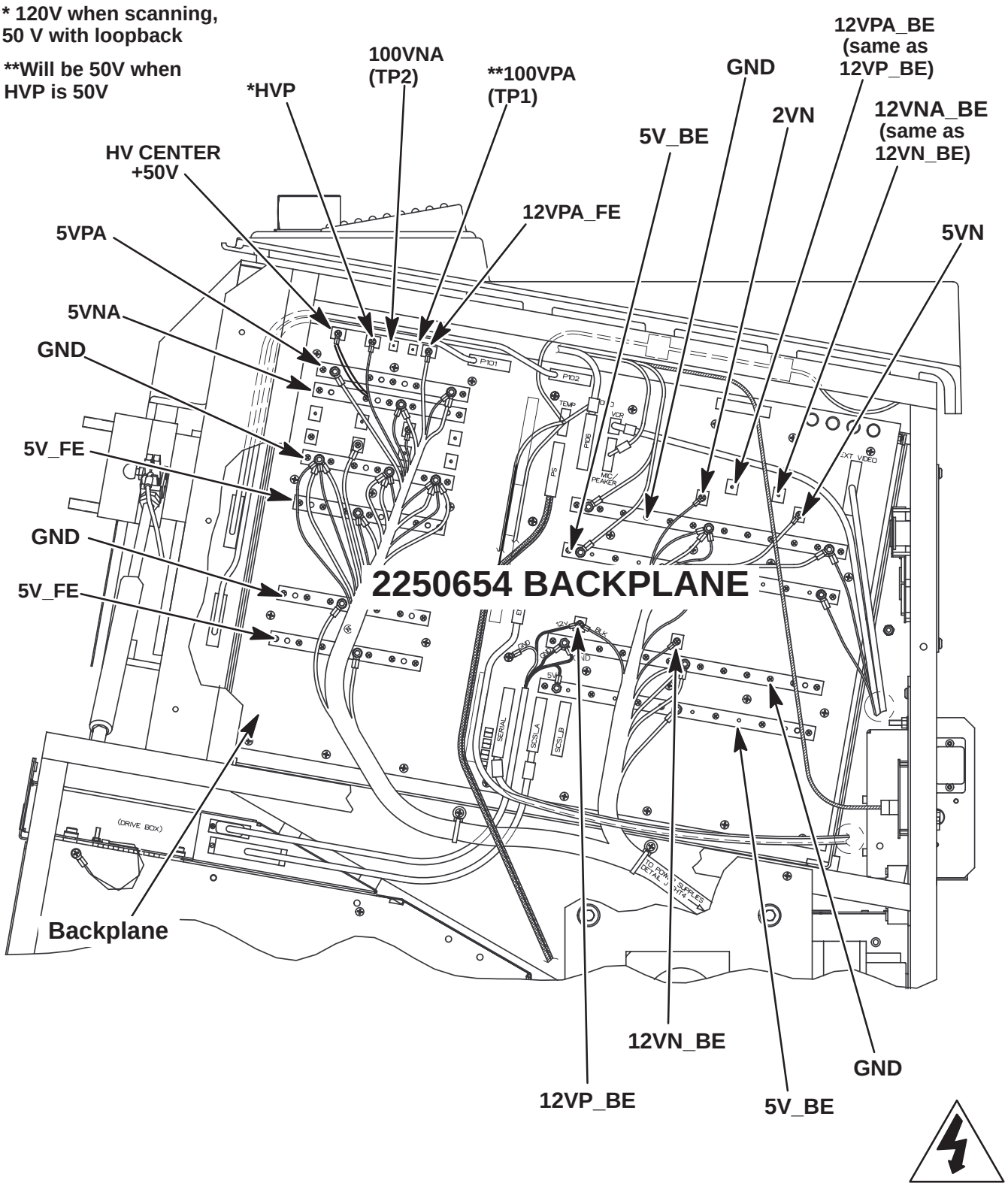

SYSTEM POWER DESTINATIONS ON BACKPLANES WITH 2250654 PART NUMBER
ILLUSTRATION 8–5

8–3–2 Checking SCSI Power

Power for the hard drive and MOD comes from PS1 via the backplane. (See Illustration 8–4.) The source for 12VP is PS1. The source for the digital 5V is PS1. Illustration 8–6 shows the power source at PS1 and the destination at the drives.

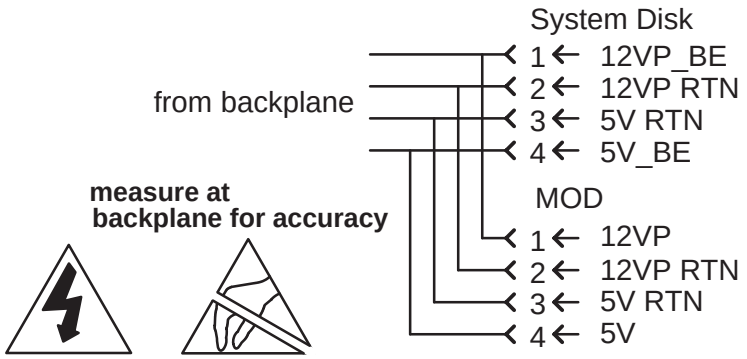

SCSI POWER SOURCES AND DESTINATIONS
ILLUSTRATION 8–6

8–4 SYSTEM TIMING PERFORMANCE

8–4–1 Checking 40 MHz and 10 MHz Clocks

Attach an oscilloscope to **J5** on the backplane to observe the 40 MHz clock (25 nsec cycle) and to **J6** to observe the 10 MHz clock (100 nsec). They are located near the center, just left of the P110. These clocks can be observed on an oscilloscope without an external load resistor.

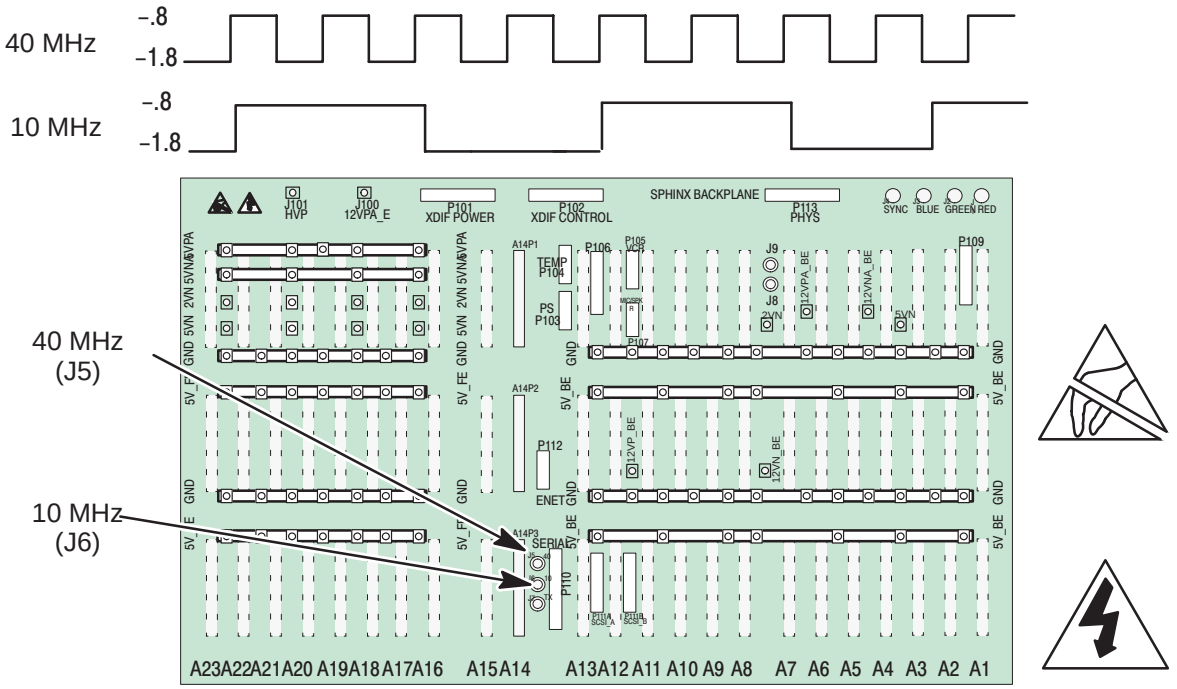

40 MHZ AND 10 MHZ CLOCK TEST POINTS
ILLUSTRATION 8–7

8–5 MONITOR PERFORMANCE

8–5–1 Checking/Adjusting Monitor

The monitor control panel is located as shown in Illustration 8–8. Set the controls on the panel as follows:

- The Automatic Light Control (ALC) uses a light sensor to adjust the contrast to match the ambient light. To engage the ALC, set ON/off switch on the control panel to ON.
- Place contrast knob in detent position (near mid–range).
- Set brightness knob in detent position (near mid–range).

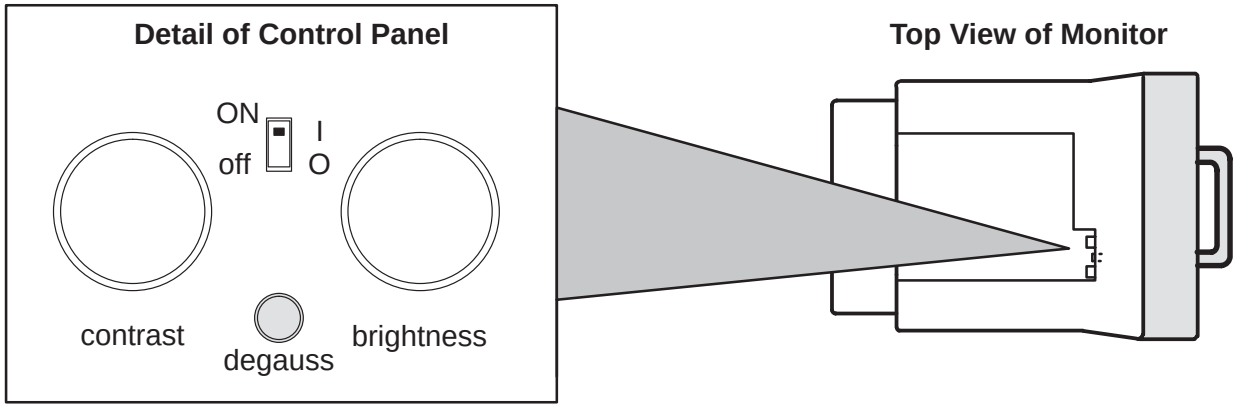

LOCATION OF MONITOR CONTROLS
ILLUSTRATION 8–8

8–5–2 Troubleshooting Monitor Problems

TABLE 8–1
MONITOR TROUBLESHOOTING

IF...	THEN...
Monitor does not work	Check AC circuit breaker (CB1). Check CB4 (monitor). Verify power is present at monitor outlet. Check if video is present at backplane. RED:J1, GRN:J2, BLU:J3, SYNC:J4 ground is on the even pins.
Colored stains appear in image	Check for presence of magnetic sources near the monitor. Eliminate the sources and then push the degauss switch. The monitor *should* automatically degauss itself each time power is applied if you wait at least 10 seconds before you turn power back ON.
Prints do not match monitor	Verify that contrast and brightness knobs are in the same positions for all records.
Video test patterns are not clear, bright, parallel or square	Replace the monitor.

8–5–2 Troubleshooting Monitor Problems (Continued)

Remove Right Side cover to access RGBS signal on backplane

Correct monitor cable routing above the card cage is important and is shown on page 7–20.

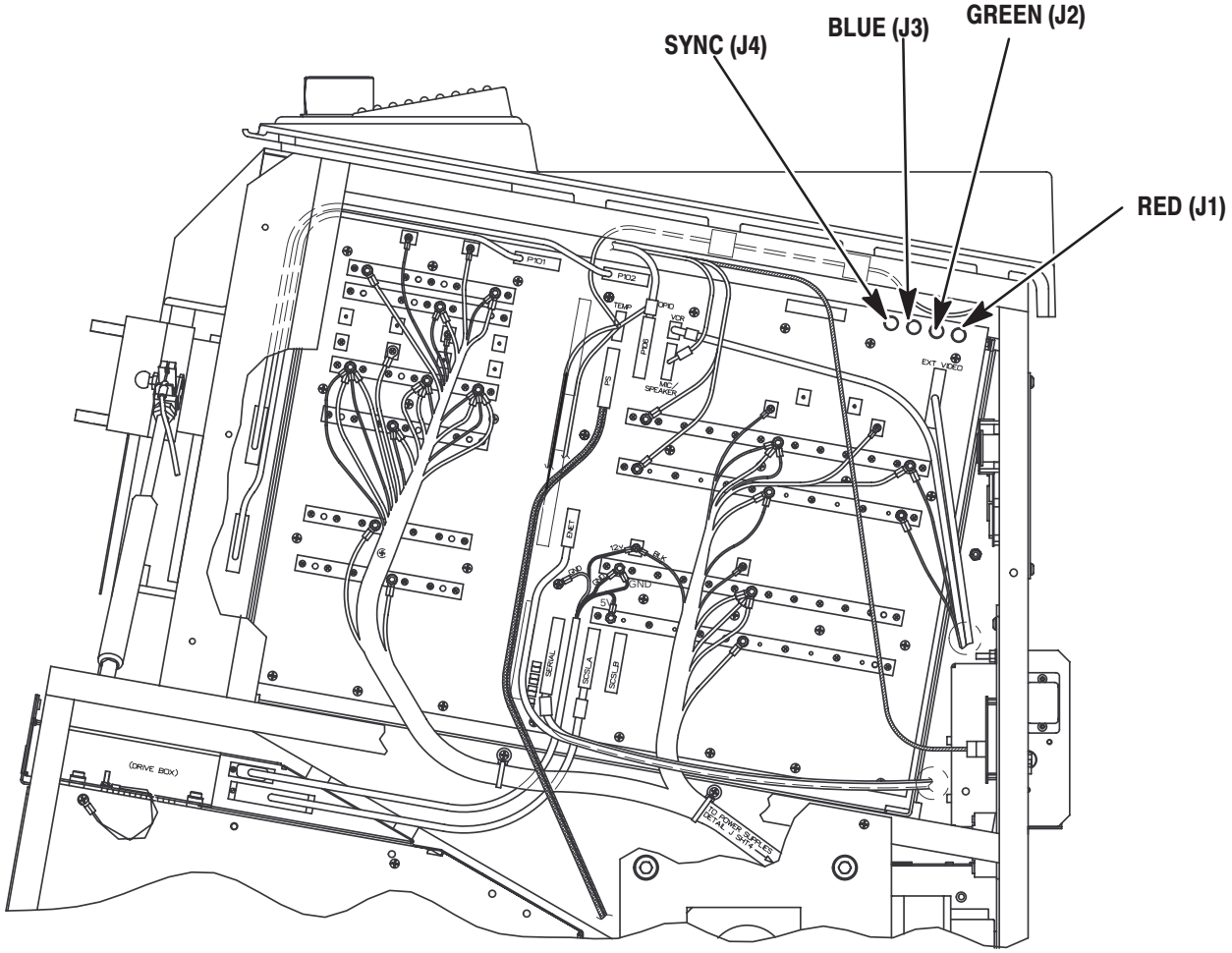

Backplane

VIDEO SIGNAL CONNECTOR LOCATIONS
ILLUSTRATION 8–9

8–5–3 Adjusting Monitor Brightness for MR Imaging

Note

Monitors are factory adjusted so the detent position matches the system software.

1 . Load the **Video Test Pattern** file reached with **[Code+K]**. The monitor will report the progress as the test patterns are loaded into CINE Memory.

2 . Use the ROI switch to display the double row of gray shades or the SMPTE pattern.

Gray Scale Pattern

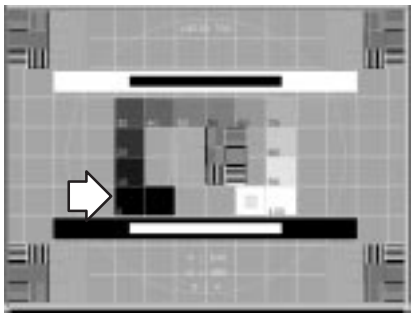

SMPTE Pattern

TEST PATTERNS USED TO ADJUST BRIGHTNESS FOR MR IMAGING
ILLUSTRATION 8–10

3 . Verify the ALC switch is ON (up), and the contrast knob is in the detent position.

4 . Adjust the brightness knob:

- Until the upper left rectangle just starts to blend with the black background in the gray scale pattern.
- Until the 0% pattern just starts to blend with its outline box (or until the 5% is barely visible) in the SMPTE pattern.

5 . Use the **(Freeze)** key to exit Video Test Patterns.

6 . Recheck your peripheral images. Adjust the peripheral if necessary.

8–6 IMAGE PERFORMANCE

8–6–1 ElectroMagnetic Interference Causes Poor Image Quality

Suspect EMI as a cause for poor image performance if the system exhibits the problems listed below.

- wavy image
- monitor distortion
- M speckle
- white vertical bars in Doppler
- clicks and pops in Doppler
- color bursts

8–6–2 Other Causes of Poor Image Quality

Check the Error Log and run diagnostics for front end problems. The probe may need to be returned for repair; an RF cable, TD board, or the XDIF may need to be replaced. If image quality is poor for a specific probe, there may a flaw in the beamforming file for that probe. To get rid of bad probe file(s), reinstall the software. Imaging will still be good even if a probe's EEPROM data is reporting Checksum Error because the system uses standard files for all.

8–7 VIDEO OUTPUT PERFORMANCE

CAUTION **Practice good ESD prevention when handling connectors on the bulkhead. A ground strap around your wrist, clipped to the ground stud on the back, should prevent large electrical discharges.**

Video outputs can be checked at the rear bulkhead panel. (See Illustration 8–11.) Idealized wave forms for these signals are shown in illustrations 8–12 through 8–17.

Video Out to peripherals is interlaced. Video to monitor is high rate progressive, whereas scan conversion and Cine occur at low rate progressive. Both input and output impedance is 75 ohms. Video Format under General System Presets (Code P) determines if video is 50 (PAL) or 60 (NTSC) Hertz.

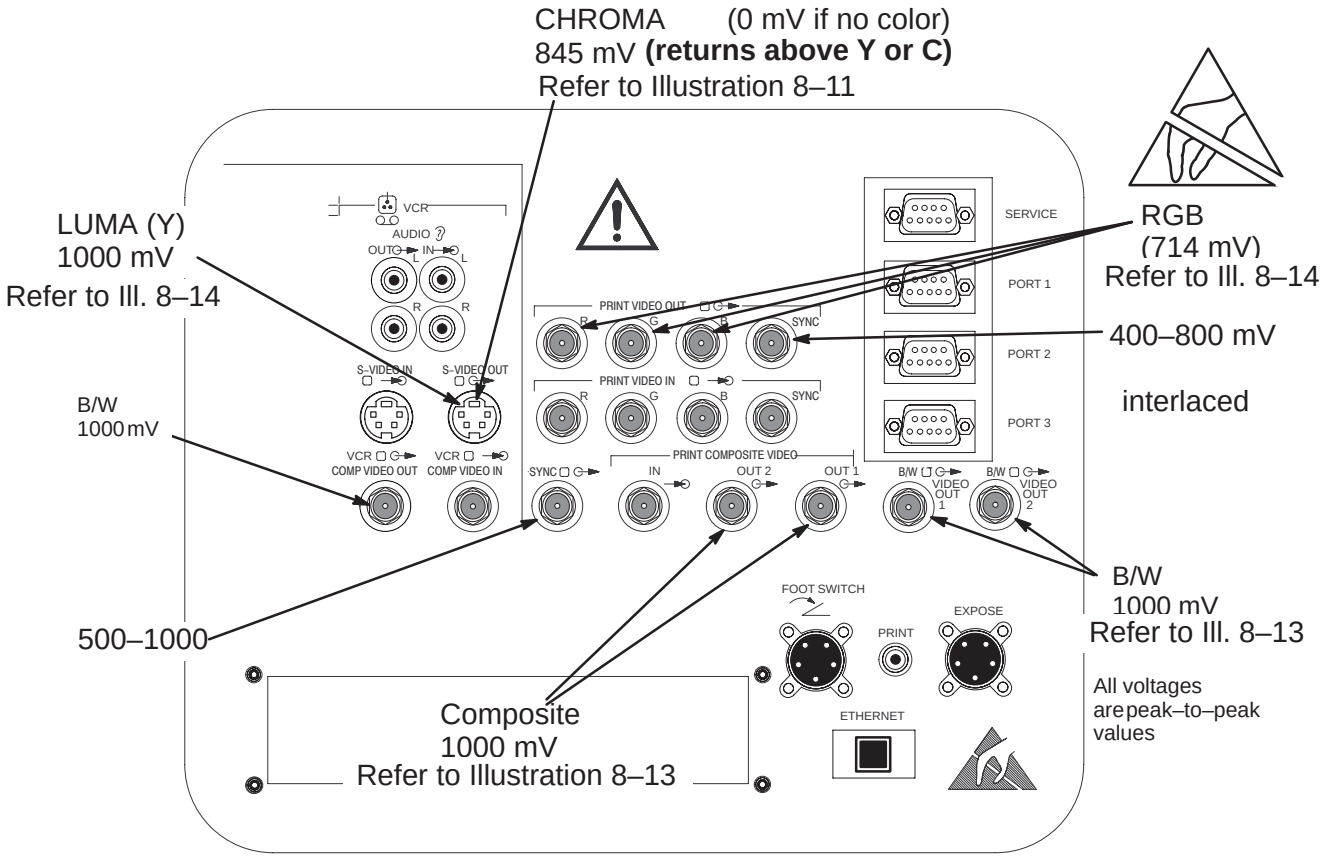

LOCATION OF VIDEO OUTPUT SIGNALS AT UNIT BULKHEAD
ILLUSTRATION 8–11

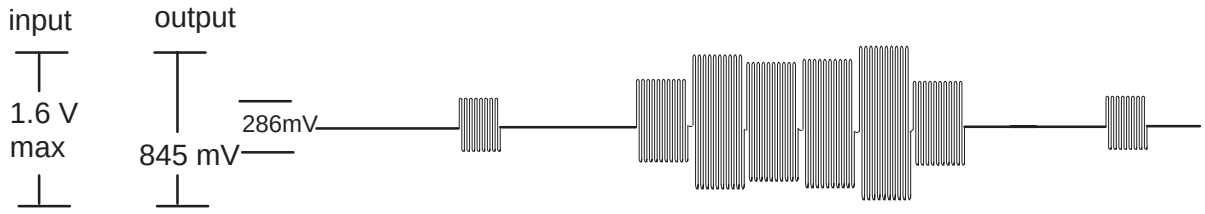

CHROMA VIDEO SIGNAL
ILLUSTRATION 8–12

8–7 VIDEO OUTPUT PERFORMANCE (Continued)

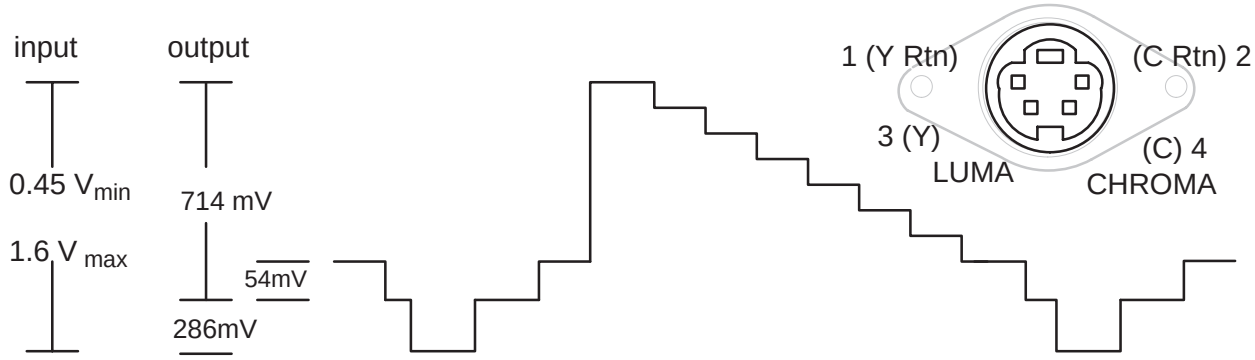

LUMA (Y) OR B/W VIDEO SIGNAL
ILLUSTRATION 8–13

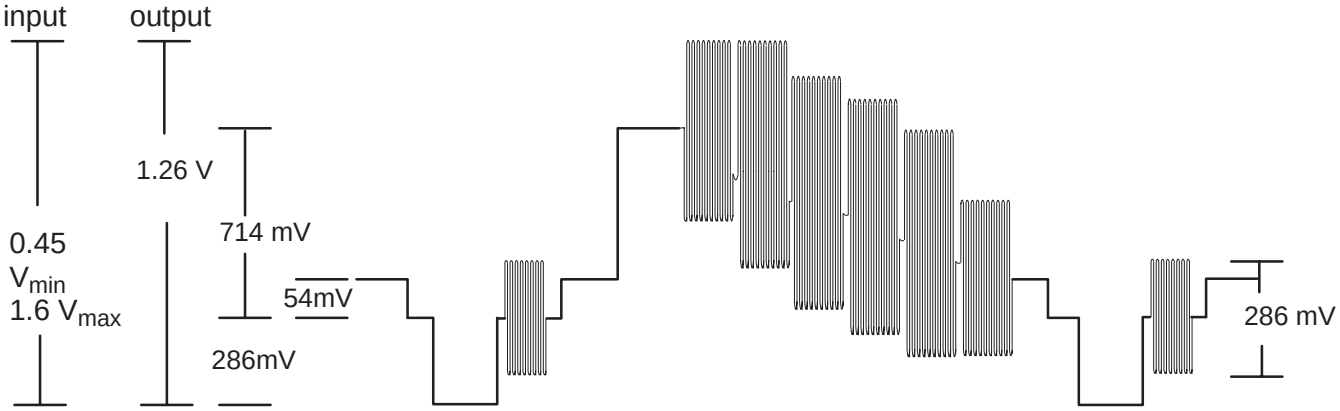

COMPOSITE VIDEO SIGNAL
ILLUSTRATION 8–14

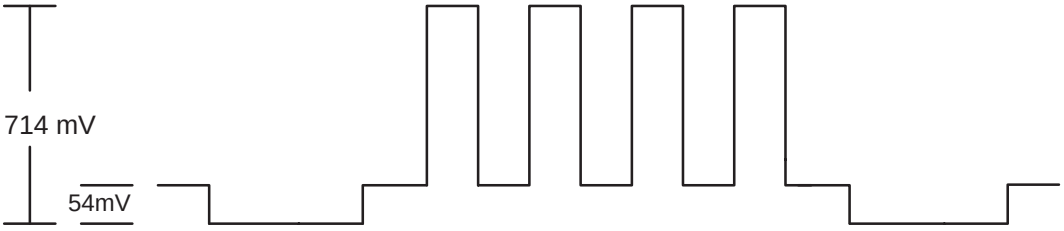

RGB VIDEO SIGNAL
ILLUSTRATION 8–15

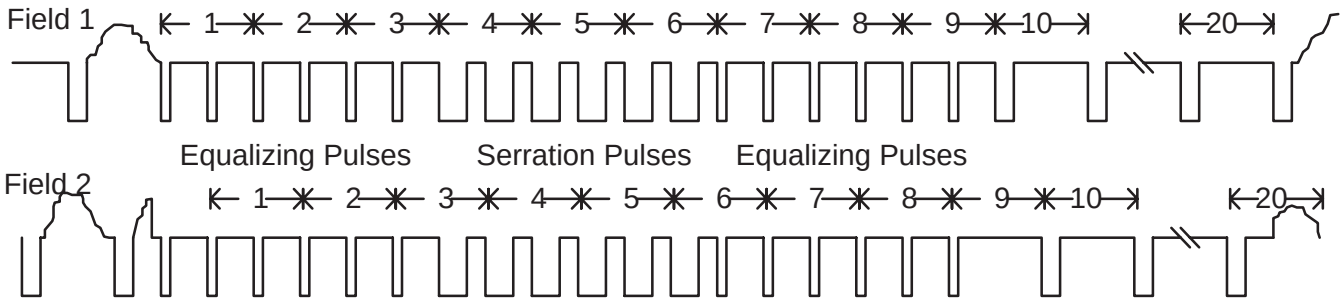

INTERLACED BLANKING PERIOD
ILLUSTRATION 8–16

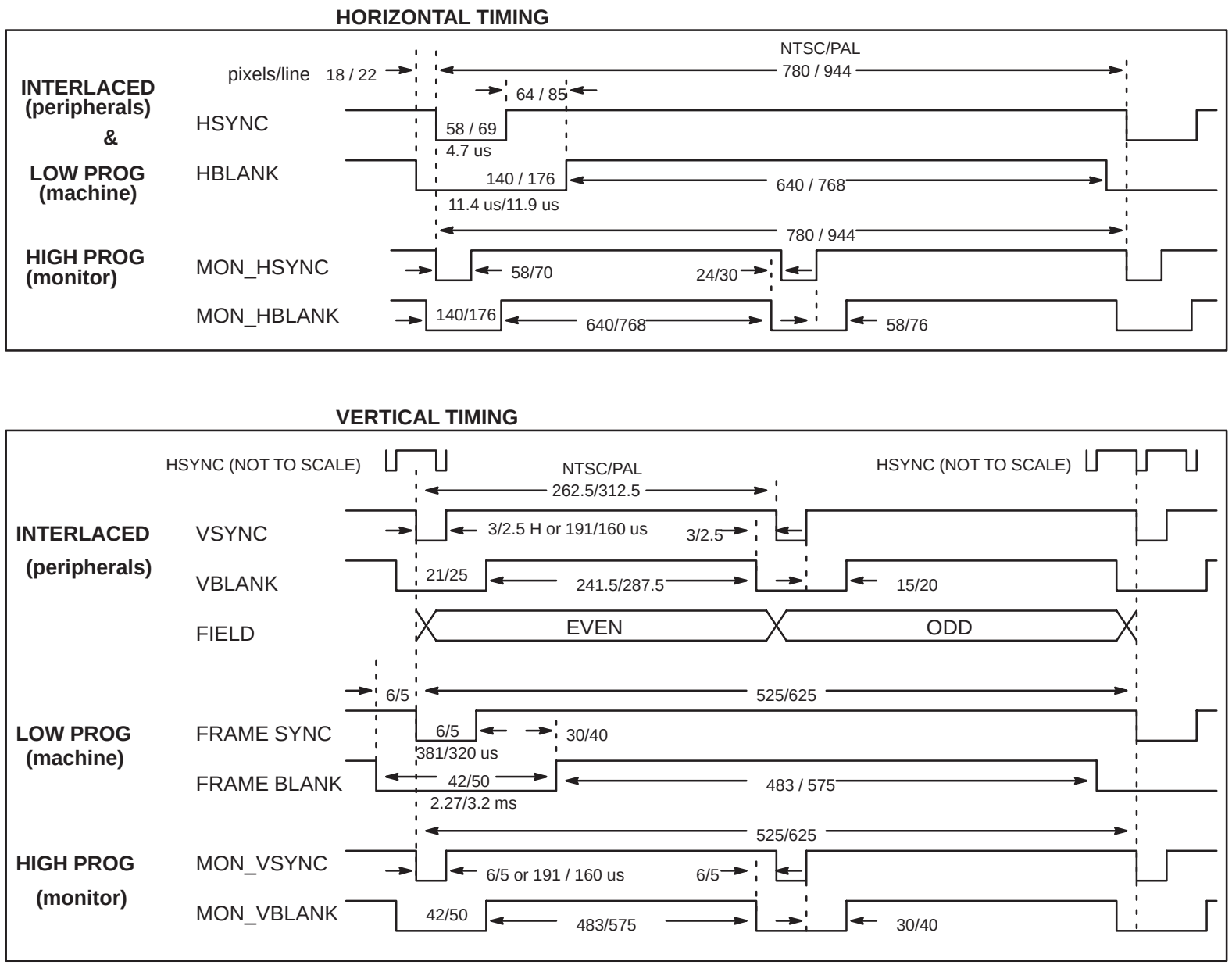

COMBINED H AND V SYNC TO MONITOR AND BULKHEAD
ILLUSTRATION 8–17

8–8 AUDIO OUTPUT PERFORMANCE

From MIC: 0.2 – 100 mV on upper OPI panel SW1 J2–2/3 to MC/PIA

MC/PIA to left speaker: up to 8.9 V
MC/PIA to right speaker: up to 8.9 V

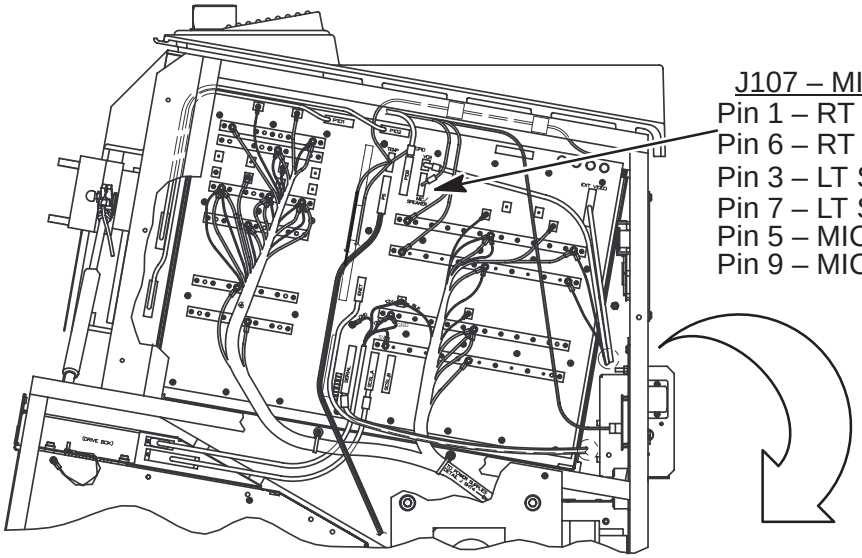

J107 – MIC/SPKR
Pin 1 – RT SPKR pos
Pin 6 – RT SPKR neg
Pin 3 – LT SPKR pos
Pin 7 – LT SPKR neg
Pin 5 – MIC pos
Pin 9 – MIC neg

RIGHT SIDE

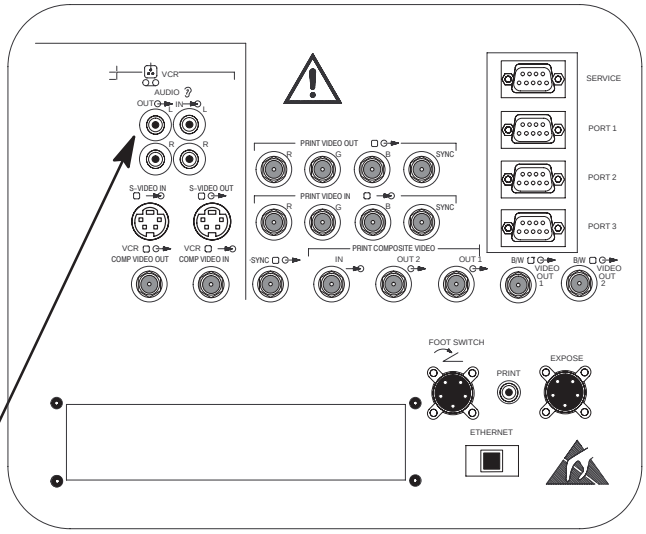

from PIA to VCR Audio Out: up to 700 mV

LOCATIONS OF AUDIO SIGNAL INTERFACES
ILLUSTRATION 8–18

8–9 LED INDICATORS

When trouble occurs, the Back End LED's may offer a clue as to what process failed. LEDS are located on the Scan Sequencer (SS), Scan Converter (XY), Master Controller/Peripheral I/O and Audio (MC/PIA). (See Illustration 8–19.)

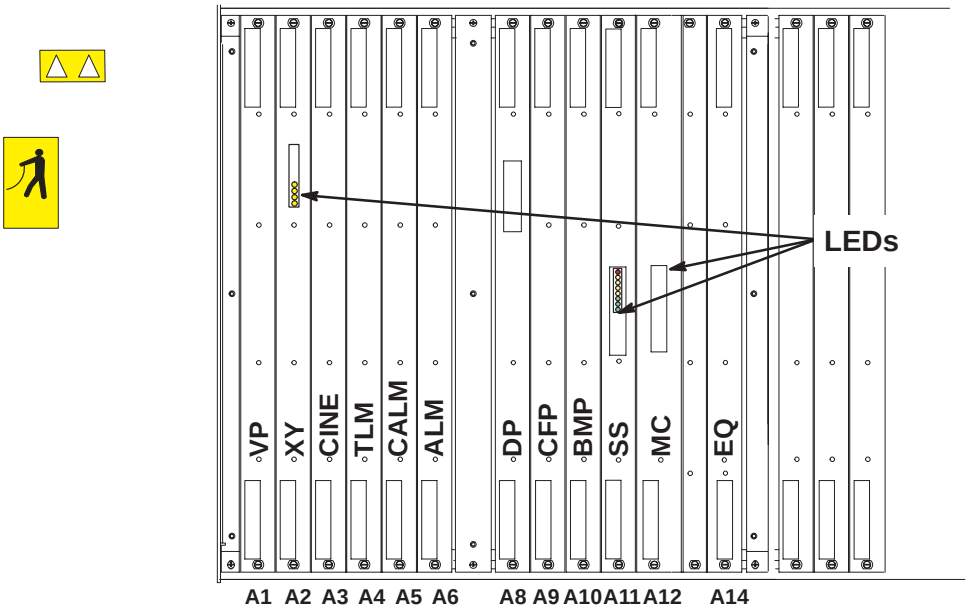

LED LOCATIONS IN CARD CAGE
ILLUSTRATION 8–19

8–9–1 XY LED Indicators

The XY LED's indicate Scan Conversion activity. (See Illustration 8–19.)

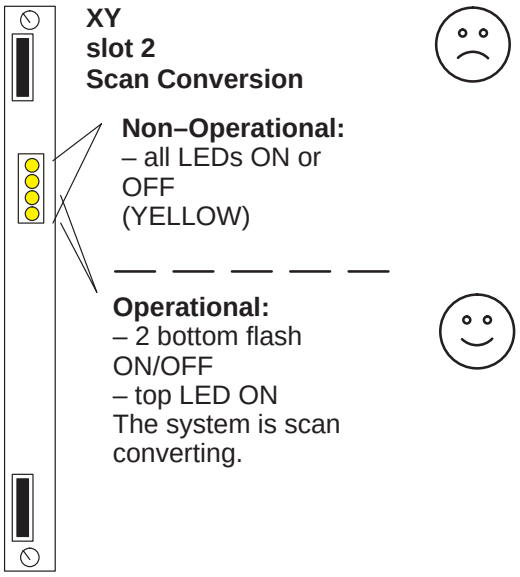

XY (SCAN CONVERSION) LEDS
ILLUSTRATION 8–20

8–9–2 Scan Sequencer LED Indicators

The XY LED's indicate Scan Conversion activity. Some of the Scan Sequencer LED's indicate Scan Conversion activity as well as Scan Control. (See Illustration 8–21.)

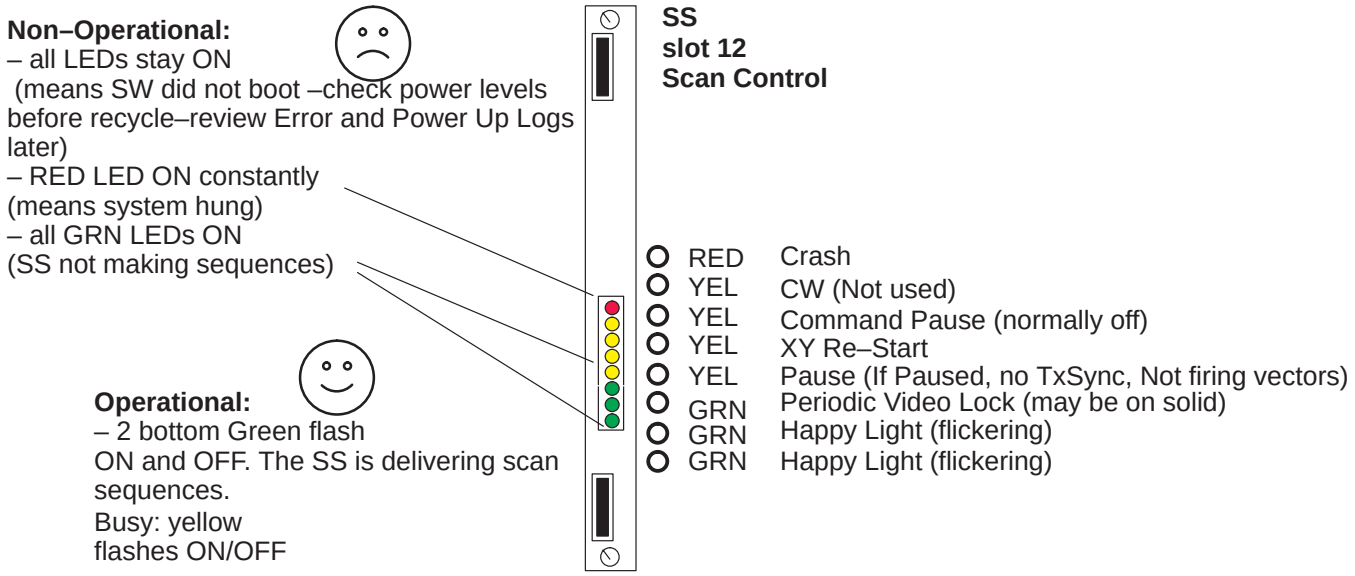

SCAN SEQUENCER (SCAN CONTROL) LEDS
ILLUSTRATION 8–21

8–9–3 MC LED Indicators

Front Panel Status LED's (Green)

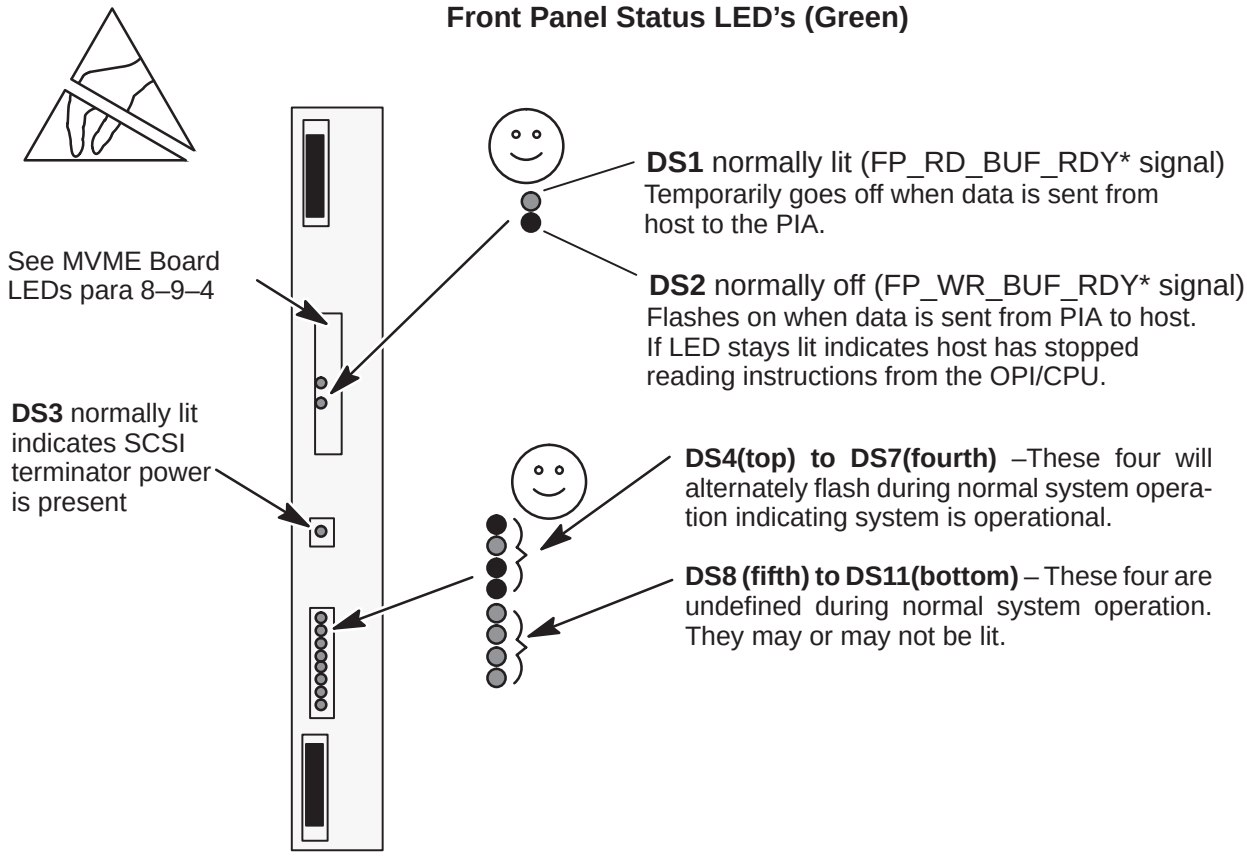

NOTE

The TGC LED's, located on the front panel are all lit during normal system operation.

TGC LED's

TGC LED's lit as shown indicates operator panel is sending data to host and the host isn't responding. On the MC board the DS1 and DS2 LED's are also both lit. Check MVME board LED's.

TGC LED's

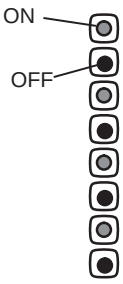

TGC LED's lit as shown indicates host is trying to communicate with operator panel and there isn't response. On the MC board the DS1 is off and DS2 is lit. This could be due to a software problem, a malfunction in the operator panel circuitry, the cable between the MC board and operator panel, or the PIA portion of the MC board.

MC AND TGC LED'S
ILLUSTRATION 8–22

8–9–4 MVME2700 Board LEDs

The front edge of the MVME2700 board has SIX LED's that indicate host status. This device also has two switches. The RESET switch reboots the system without interrupting the unit's power.

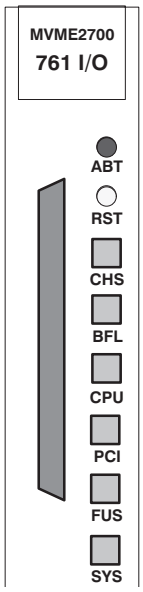

Label	normally:	Description
ABT (abort)		Sends an interrupt signal to the processor.
RST (reset)		Resets the entire system by driving SYSRESET* signal.
CHS (yellow)	off	Checkstop; lights when a halt condition from the processor is detected.
BFL (amber)	off	Board failure; indicates a fault is present on the MVME2700.
CPU (green)	ON	CPU activity; lights when the MPC750 processor bus is active.
PCI (green)	ON	PCI activity; lights when the PCI bus is active.
FUS (green)	ON	Fuse OK; indicates that +5Vdc, +12Vdc, and –12Vdc power is available on the board.
SYS (green)	ON	System Controller; lights when the MVME2700 is functioning as VMEbus system controller.

8–10 CONTROL PANEL SELF–TEST

The control panels self–test checks the footswitch (if present), the lamps, VFD pixels, slide pots, rotary encoders, trackball, keyboard, switches.

1. Turn power to the unit Off, wait at least ten seconds, then turn it back ON.
2. Immediately press and hold both the **[X]** and **[C]** keys. Keep these keys depressed while systems powers up.
3. All **lamps and LEDs** flash ON dim, ON bright, ON dim, and OFF. Then the cycle repeats. Replace any lamp or any board with a LED that fails to light.
4. Check that all Softkey Display (VFD) pixels are ON. Replace the Softkey Display board (C1–A6) if any pixel fails to light.
5. Press and hold both the **[X]** and **[C]** keys for at least one second. The softkey display changes to the format shown in illustration 8–23. The highlighted P1 (top) through P8 entries indicate the positions of the eight **TGC pot wipers**. Check all TGC pots for the following count values and positions: far left=0 (zero); middle=approximately 127; all the way to the right=255.

TGC Pot Counts P1–8:

Positions: Left = 0
Middle=about 127
Right =255

```
46–288680–G03–F          Rom V2.0    Ram V2.0

Keyboard Index 99 – Released

P1 0        P2 0        P3 0        P4 0
P5 0        P6 0        P7 0        P8 0
E1 0        E2 0        E3 0        E4 0
X_val 0                 Y _val 0
```

SOFTKEY DISPLAY DIAGNOSTIC SCREEN – TGC POTS
ILLUSTRATION 8–23

8–10 CONTROL PANEL SELF–TEST (Continued)

6 . The E1 through E4 entries highlighted in illustration 8–24 indicate the position of the three rotary encoders as shown in the Illustration.

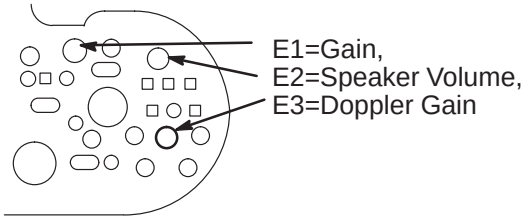

Rotary Encoder Counts E1–E4:

Positions: Start= 0
CW=1 to 63
One more click CW=0
CCW= –1 to –64
One more click CCW=0
E4 doesn't increment

```
46-288680-G03-F          Rom V2.0    Ram V2.0


P1 0        P2 0        P3 0        P4 0
P5 0        P6 0        P7 0        P8 0
E1 0        E2 0        E3 0        E4 0
X_val 0                 Y_val 0
```

DIAGNOSTIC SCREEN – ROTARY ENCODERS
ILLUSTRATION 8–24

7 . The X and Y values highlighted in illustration 8–25 indicate the position of the X and Y encoders of the **trackball** where X reflects left and right movement and Y reflects up and down movement. Check the trackball for the smooth mechanical operation. If values do not change for certain movements, replace the trackball.

Trackball Counts in X and Y directions

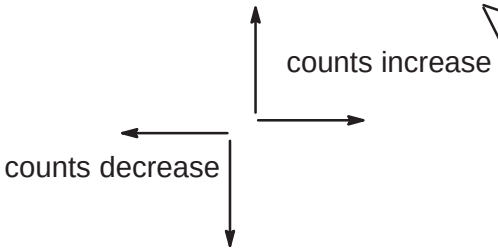


```
46-288680-G03-F          Rom V2.0    Ram V2.0


P1 0        P2 0        P3 0        P4 0
P5 0        P6 0        P7 0        P8 0
E1 0        E2 0        E3 0        E4 0
X_val 3425              Y_val -755
```

DIAGNOSTIC SCREEN – TRACKBALL
ILLUSTRATION 8–25

8–10 CONTROL PANEL SELF–TEST (Continued)

Note

The END EXAM, CALC, and COMMENT keys are not mapped out in the OP panel firmware for self test and will not respond to the test when checked. Otherwise, they will operate as expected during normal system operation.

8 . The text “Keyboard Index xxx – Released/Depressed” appears after a key on the keyboard is pressed. The “xxx” refers to the number assigned to a particular key. When a key is pressed, the assigned number should appear along with the word “Depressed”. When the key is released, the number stays the same and “Released” should appear. If not replace the keyboard.

Keyboard Key Values:

```
46–288680–G03–F          Rom V2.0     Ram V2.0

Keyboard Index xxx – Released/Depressed

P1 0        P2 0        P3 0        P4 0
P5 0        P6 0        P7 0        P8 0
E1 0        E2 0        E3 0        E4 0
X_val 0                 Y_val 0
```

Lower Case Key Values:

New Pt=130	s=115
1=49	d=100
2=50	f=102
3=51	g=103
4=52	h=104
5=53	j=106
6=54	k=107
7=55	l=108
8=56	;=59
9=57	’=39
0=48	Return=129
–=45	Shift (L/R)= N/A
==61	z=122
Backspace=133	x=120
Exit=128	c=99
q=113	v=118
w=119	b=98
e=101	n=110
r=114	m=109
t=116	,=44
y=121	.=46
u=117	/=47
i=105	Caps Lock= 131
o=111	↓=137
p=112	←=136
Word Del=132	Space Bar=32
Home=134	Option ∆=126
Code= N/A	Comment
a=97	Body Pattern=135

Upper Case Key Values (Shift key pressed at same time):

!=33	
@=64	A=65
#=35	S=83
$=36	D=68
%=37	F=70
^=94	G=71
&=38	H=72
*=42	J=74
(=40	K=75
)=41	L=76
_=95	:=58
+=43	”=34
Delete All=139	Z=90
Q=81	X=88
W=87	C=67
E=69	V=86
R=82	B=66
T=84	N=78
Y=89	M=77
U=85	<=60
I=73	>=62
O=79	?=63
P=80	↑=142
Word Tab=138	=141
Set Home=140	

Code + Key Values:

Code+Q =17
Code+W=23
Code+E=5
Code+R=18
Code+T=20
Code+Y=25
Code+U=21
Code+I=9
Code+O=15
Code+P=16
Code+A=1
Code+S=19
Code+D=4
Code+F=6
Code+G=7
Code+H=8
Code+J=10
Code+K=11
Code+L=12
Code+Z=26
Code+X=24
Code+C=3
Code+V=22
Code+B=2
Code+N=14
Code+M=13

DIAGNOSTIC SCREEN – KEYBOARD KEYS
ILLUSTRATION 8–26

8–10 CONTROL PANEL SELF–TEST (Continued)

9 . The text “Switch Index xxx – Released/Depressed” appears after a **control switch** is pressed. The “xxx” refers to the number assigned to that switch. When a particular switch is pressed, the assigned number should appear along with the word “Depressed”. When the switch is released, the number should stay the same and “Released” should appear.

Switch Values:

```
46–288680–G03–F          Rom V2.0    Ram V2.0

Keyboard Index xxx – Released/Depressed
Switch Index xxx – Released/Depressed
P1 0        P2 0        P3 0        P4 0
P5 0        P6 0        P7 0        P8 0
E1 0        E2 0        E3 0        E4 0
X_Val 0                 Y_Val 0
```

Pushbutton Values and Board Location:

3D=216	SW1
B Flow=217	SW1
Harmonic=0	SW1
Multi Freq =1	SW1
Softkey Panel#1 (up)=201	SW2
Softkey Panel#1 (down)=202	SW2
Softkey Panel#2 (up)=203	SW2
Softkey Panel#2 (down)=204	SW2
Softkey Panel#3 (up)=205	SW2
Softkey Panel#3 (down)=206	SW2
Softkey Panel#4 (up)=207	SW2
Softkey Panel#4 (down)=208	SW2
Previous (up)=209	SW2
Next (down)=210	SW2
Acoustic Output (up)=2	SW2
Acoustic Output (down)=3	SW2
Multi Image=4	OPI/CPU
Image Select=5	OPI/CPU
Play/Stop (VCR)=6	OPI/CPU
Search FF (VCR)=7	OPI/CPU
Search Rev (VCR)=8	OPI/CPU
Record/Pause (VCR)=9	OPI/CPU
Archive Menu=10	OPI/CPU
FOCUS Number (up)=11	OPI/CPU
FOCUS Number (down)=12	OPI/CPU
FOCUS Position (up)=13	OPI/CPU
FOCUS Position (down)=14	OPI/CPU
Image Preset (up)=15	OPI/CPU
Image Preset (down)=16	OPI/CPU
Depth (up)=17	OPI/CPU
Depth (down)=18	OPI/CPU

Auto Optimize=46	SW3
Caliper=50	SW3
M=20	SW3
Zoom=21	SW3
Mic (ON/OFF)=23	SW3
Cursor=42	SW3
P1=43	SW3
P2=45	SW3
Freeze=44	SW3
Trace=47	SW3
Ellipse (up)=48	SW3
Ellipse (down)=49	SW3
SET=51	SW3
ROI Size (up)=52	SW3
ROI Size (down)=53	SW3
ROI Size (left)=54	SW3
ROI Size (right)=55	SW3
CF=35	SW3
PDI=39	SW3
Update=41	SW3
PW=40	SW3
Angle Steer (left)=24	SW3
Angle Steer (right)=25	SW3
SV Gate (up)=26	SW3
SV Gate (down)=27	SW3
Angle Correct (right)=28	SW3
Angle Correct (left)=29	SW3
Baseline (up)=30	SW3
Baseline (down)=31	SW3
Invert=32	SW3
Velocity Scale (up)=33	SW3
Velocity Scale (down)=34	SW3
Freeze (Left Pedal)=62	footswitch
P1 (Right Pedal)=63	footswitch

DIAGNOSTIC SCREEN – SWITCHES
ILLUSTRATION 8–27

8–10 CONTROL PANEL SELF–TEST (Continued)

10 . To EXIT the Control Panel Self Test and return the LOGIQ™ 700 to normal operating mode, press and hold **[X]** and **[C]** keys for one second, then release. The system should continue the boot process that was interrupted to start the Control Panel Self Test. If not, press and hold the **[X]** and **[C]** keys again for one second and then release the keys. If the system still remains in the Control Panel Self Test, repower the system.

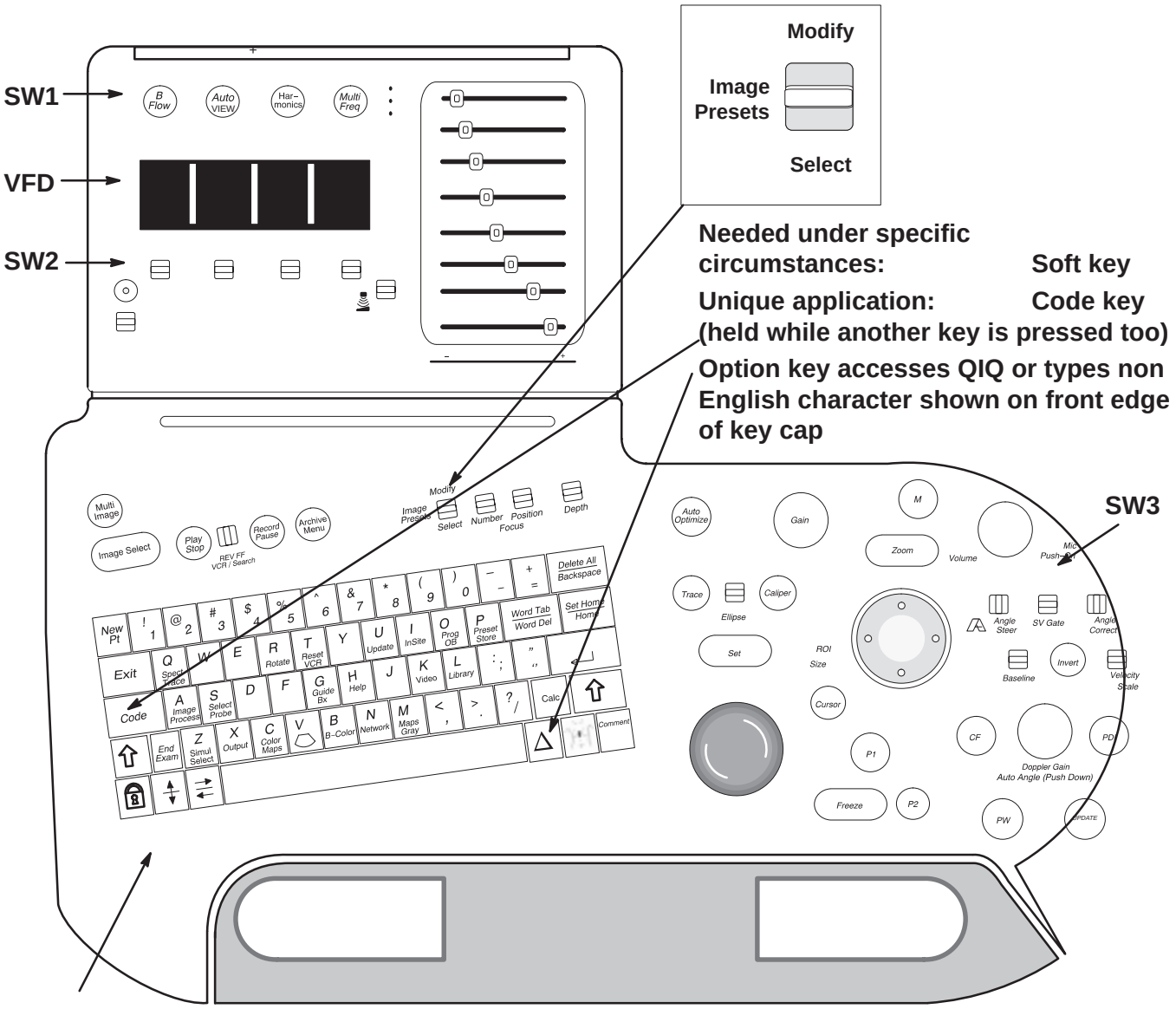

ENGLISH LANGUAGE CONTROL PANEL
ILLUSTRATION 8–28

8–11 SYSTEM MESSAGES

Error messages can be found in the diagnostics under VIEW LOG. When the system is in application mode, one line on the bottom of the monitor reports current status, operator instructions, and system problems (error messages). This line is 75 characters long. A message disappears when the problem goes away or is overwritten by another problem. Messages are displayed on the same line as acoustic power, so output to a hardcopy device is user presettable. Before the system is in application mode, messages appear on the VFD or softkey screen.

8–11–1 Print or Beep

Presets determine whether acoustic power and warning messages are printed. They also determine whether the system beeps for prompts and warnings. Use **[Code P]** to change how the system operates.

8–11–2 Warning Messages

Warning messages for over temperature conditions, as an example, are displayed until the problem is corrected. If an operator reminder is required, the reminder is displayed over the warning for 2 seconds (or until another error or prompt is sent). Then the warning message reappears.

8–11–3 Error Logs

Messages that are coded as failures are automatically entered into an error log. The error log is a file that resides on the system disk. Access diagnostic software to see this log. Each error message in the log is tagged with date, time, description.

8–11–4 Peripherals

Approved RS–232 controlled peripherals when configured and connected to the correct system serial port can have their status displayed on the monitor and their messages stored with others in the system error log.

8–11–5 Disruptive Mode

The unit cannot be in Applications Mode and Diagnostics Mode at the same time. The two modes are isolated to prevent diagnostic setups from altering applications. When in diagnostic mode, the word “Diagnostics” appears where Patient Name normally appears on the monitor as a flag to the operator that approval is given to InSite to enter the “Disruptive” mode. This flag is needed because the control panel is locked out and does not respond to operator entries. Diagnostic logs can be observed and other menu bar options can be used without entering this disruptive mode, but once [Enter] is pressed with the menu choice Diagnostics, the machine is in Disruptive mode. Use the menu bar choice EXIT to return the machine from Diagnostics to Applications.

Note

Identification of the probe connectors is not consistent. Applications refer to the rightmost probe connector as socket 4 and the leftmost as socket 1. Beamformer diagnostics identify the rightmost slot as 0 and the leftmost as 3.

1	2	3	4	Applications
3	2	1	0	Diagnostics

TABLE 8–2
DESCRIPTIONS OF SYSTEM ERROR MESSAGES (SHEET 1 OF 10)

Message	Meaning
~Probe ID	System had trouble recognizing the probe being activated at the listed time.
21.7 temperature differential between Exhaust and ambient exceeds 21.0 C	The system adds an entry to the Error Log when a temperature or differential that exceeds the certain limits is detected. These entries are listed in the Temperature Log within diagnostics. Errors can be caused by hot environment or hardware failures. Sensors, wires, circuitry, and 12VPA_FE power must operate correctly to get an accurate result.
Activating Wide Band 3–6 MHz probe	The host is initializing beamforming for a different probe because a different probe has been lifted, a specialty probe has been inserted, or a probe has been manually selected with second level [Code S]. After the system powers up, the system determines which probe to activate. A specialty probe, if attached, is activated. A probe lifted from its yoke, is activated. If all probes are resting in their yokes, and no specialty probe is attached, the probe connected to the rightmost XDIF connector is activated.
AE usdicomdevice not present in network configuration table.	Use [Code+P] to correct the spelling, IP address or port destination for the DICOM device. Get the correct names and settings from the site system administrator. These names are case sensitive.
Archive unavailable. Hard disk full	There is no more space left on the hard drive. Put a formatted MOD disk into the drive to have the system copy images queued for archival. Use [Archive Menu] to delete images that have been copied.
ASSERT FAIL: cine_arch.c line 1385, def != NULL	The system is unable to transfer files between CINE memory and the SCSI device. Either the MOD disk, MOD or hard drive or SCSI cable may be bad.
ASSERT FAIL: ke_archive_task.c line 351, unmnt_err == NULL	The system is unable to eject the Archive MOD disk. Either the MOD disk, MOD drive or SCSI cable is bad.
Bad EEPROM checksum, Probe socket 3, Probe ID 0x49	In this example, the EEPROM on the 326s (0x49) probe attached to socket 3 contains corrupt data or the IIC bus had a bad connection when the host read this probe. Quickly relatch the probe; if problem goes away the connection was at fault. Otherwise, the EEPROM is bad and the probe needs to be repaired if the system needs to access the probe data. Starting with R6.0.1 the system uses common system files and does not need the probe calibration data. However future operation may depend on certain parameters being present inside certain probes. Call Service Support to verify need to replace.
Bus Error Reboot: Address: 0xE74DEAE8, PC: 0x0007AAA, Time	Software probably tried to write data to a protected space so the host cleared the debris by rebooting. The Address and Program Counter values are important to Software Engineering.

TABLE 8–2
DESCRIPTIONS OF SYSTEM ERROR MESSAGES (SHEET 2 OF 10)

Message	Meaning
`Cannot read from file /Probe.DIR/gen_xxx.dat`	The host has determined that the probe has a calculated Decimal ID of xxx, such as 000, and this number does not match any valid probe decimal ID. See Probe Data Table for a list of all probe IDs.
`Check for airflow obstructions and clogged filters.`	This message appears when the EXHAUST – INTAKE temperature difference (delta) is exceeded. If the cause is an extreme temperature problem that is not corrected, the system might stop working and hardware could be damaged. Only operate the system with all covers installed. Keep intake and power supply filters clean. Attach Intake sensor to plastic as close to air filter as possible.
`Check probe socket 2 connection`	The host did not receive a legitimate probe type (PTY) code from a connected probe. Probable causes for this message are: the probe is not locked, or was mechanically locked too slowly for the digital software to accurately assess, or the probe is foreign to this machine. Type [Code S] to see what probes the host thinks are connected. If the wrong type is reported, toggle the hook switch or the VFD toggle. If the system does not activate the probe, then relatch the probe with a smooth and quick (less than 1 second) motion. This message could also mean the XDIF connector or probe is defective, a cable is defective, or a failure has occurred through the path: PROBE–XDIF–cable–EQ–FECT–SS–host.
`Check VCR and recycle power`	Make sure the VCR is ON before you boot the system. The system configures the VCR during system initialization.
`Checksum error in CPU INSITE E2PROM.`	Corrupt configuration numbers found for the OPI/CPU in the control panel.
`Checksum error in TLM INSITE E2PROM.`	This is just one example of this message for active components. Any active component, such as a probe or circuit board, could report this problem. The EEPROM, in this example on the TLM board, contains invalid data. Check the FRU's labeling and re–enter the correct data into the Diagnostic Configuration Log. The BP FRU also holds the RF cable type which must be "1" and not "255." If the correct data and rejected or the message still appears, the EEPROM is bad or Write Protected (CINE). If the reported board is the backplane, there are two places to check/correct in the Configuration Log: under FRU and under System.
`CINE memory unavailable`	Exiting Archive or turning off the VCR causes the system to dump the current image content of the CINE board memory.
`Code–I Failed: Logout Required`	There are four types of access to diagnostics. The four types are: Engineering, Customer, Service Engineer with the yellow MOD, and InSite. Only one access type at a time is allowed. Whoever has the current access must EXIT before another type of access can proceed.

TABLE 8–2
DESCRIPTIONS OF SYSTEM ERROR MESSAGES (SHEET 3 OF 10)

Message	Meaning
`Correcting Disk, please wait...`	Wait! Do NOT recycle power. When asked to copy files to or from the hard drive, the system checks the state of the hard drive first. If the hard drive is found to be corrupted, software attempts to correct the problem and is usually successful. However if software is unable to correct the problem in 20 minutes, the hard drive may need to be replaced. This operation usually take less than 20 minutes; but in the worst case could be over 2 hours. Call for help whenever the wait is longer than 20 minutes.
`Could Not Clear TDnn Chan.nnn TX Memory.`	TD board has probably failed. Could also be the FECT access to the TD board.
`Delivery sequencer failed to gate delivery`	Something prevented data from being loaded into hardware. The system may lack certain power levels, clocks, or both. Momentary disruptions of the system clocks or AC power can cause the LN/HV PS2 to shut down or the unit to hang.
`Detected a spurious interrupt from the xyz`	A message of this type is used when the system cannot determine the source of an interrupt. Some logic fault on the xyz component has probably generated a false interrupt. If the xyz is the FECT or interrupt controller and the problem occurred during the HV Fault diagnostic, the message can probably be ignored.
`Diag disconnect reboot at 07/14/1995 11:38:35`	If the communication cable becomes disconnected while diagnostics are active, the system will reboot the unit to applications defaults.
`Disk vol 5.1 failed. RC = 0x10510007`	If the system fails to start copying files and the MOD disk can ejected by pressing the MOD EJECT button, then do so and just push the disk back into the MOD again. This error means that the drive was not up to speed so the access timed out. If a disk can be ejected, the process is complete or the disk was never recognized.
`Divide By Zero Error !`	At least one TD channel is dead, or the RF path between the TD and the probe is open.

`ERROR: NFS server daemon startup failure`
 	
`No Valid Software Found`
	The host cannot find the operating software. This problem can occur when the host recognizes an MOD disk that does not contain valid operating software, such as a Service Key, as a SYSTEM MOD DISK. Eject the disk and reboot the system. Otherwise, check the SCSI subsystem. Remember the SCSI sub– system is ESD sensitive. Be sure the SCSI and power cables are all well seated, that the terminator is seated on the bulkhead, and that the terminator power DS1 LED is lit on the MC board. There is also a 1 A 250 V fuse near the P3 connector of the MC. This error could mean that the MOD or System drive is bad. NFS is the Network File System and a daemon is a UNIX background software processor. When the machine is powered on, the host first initializes UNIX communication software and hardware and then looks for media (a volume) in the MOD. When the hard drive or software is new, software comes from the MOD disk rather than from the hard drive. If the host cannot communicate with the hard drive, the MOD, nor access instructions via the ETHERNET, the system cannot boot.

`Error in Sending Operator Message`	This message is generated by the TLM when a message cannot be sent to the monitor.
`Exhaust temperature sensor has failed. Reading = xx.x C.`	Check that the reported sensor is properly connected and receiving power. The system will ignore entries that use this sensor until the problem is fixed.

TABLE 8–2
DESCRIPTIONS OF SYSTEM ERROR MESSAGES (SHEET 4 OF 10)

Message	Meaning
`Exhaust temperature (55.7 C) exceeds warning threshold`	Verify that nothing is blocking the air flow around the sensors and that the top sensor(s) is (are) mounted with a plastic, not metal, standoff. Keep all covers in place.
`Front End Control Board Shadow Reg access timeout`	The host/kernel was unable to access the Front End at the FECT.
`Front End IIC bus access timeout`	The FE IIC bus is used to query Front End boards for their presence and model information. Controllers for this function reside on the EQ. The function requires 5V_FE, 2VN, 5VPA,12VPA_FE, 15VPA, 15VNA. The host retrieves Front End configuration data from the EQ via the FECT and SS. When the system initializes the hardware and boots application software, the IIC bus network is used to check configuration. Don't attach probes while the system is booting. Tighten a probe whose latch is not closed completely with a swift twist and then repower the system (pause while off). Do not start diagnostic software until the application software is completely booted as indicated by the presence of a B image on the monitor. Otherwise, diagnostic software may shut down necessary application processes prematurely. The system could get stuck in the configuration check due to a momentary drop in AC power that puts the Front End power supply (PS2) into a limited operating condition that cripples the IIC network. Always wait at least 10 seconds, 30 is even better, to switch ON power after turning it off.
`Front End IIC error in %s. Bus=0x%02x, Dev=0x%02x (timeout)`	The FE IIC bus did not respond. The data path is MC/PIA to SS through CPU Control bus to FECT to EQ to BP and XDIF control cable and back. Bus 0a=TD slots A16–23, Bus 0c=FE Cnt Bds, Bus 0e=XDIF/probe. Device code points to specific FRU.
`Front End IIC error in %s. Bus=0x%02x, Dev=0x%02x, Cnt=%1d (bus err)`	The FE IIC bus resides in the backplane, the EQ's ADC and IIC controllers, and the FECT to host communication. The '%s' represents the software module that noted the problem.
`Front End IIC error in bf_get_eeprom_data. Bus=0x0e, Dev=0xa2, Cnt=1`	May indicate a bad LN/HV (PS2). The FE IIC function uses four buses. Bus 0x0e identifies the branch that goes to the XDIF and probes. This bus error occurs most often and indicates that the host cannot read the Front End configuration for the reported bus. If all front end buses cannot be read, there may be a FE power problem. If only the XDIF bus cannot be read, the probe may have been latched too slowly or the XDIF slot to which the probe (Device 0xa2 is Socket 3) is attached interferes with the EQ reading the probe's EEPROM. The '0x' identifies a Hex number. The 'Cnt' states how many errors.
`Front End VME access port timeout`	The host/kernel could not access the Front End at the SS. Perhaps power was cycled too quickly or LN/HV is too cold, too hot, or defective.

TABLE 8–2
DESCRIPTIONS OF SYSTEM ERROR MESSAGES (SHEET 5 OF 10)

Message	Meaning
High Voltage Fault at TD Board nn	If the Interrupt Service Routines can identify which TD drew too much pulser current, this message will report the bad board. However if the HVFAULT* signal is grounded this will also cause the EQ to turn off the HVN on PS2. See WARNING: HV Fault on page 35.
InSite diagnostics active	The machine cannot be used when InSite Diagnostics are active. To interrupt an InSite connection, recycle power and then enter Diagnostics to complete a proper EXIT back into Applications mode.
InSite image transfer HR:MN:SC	A transfer of a file between the LOGIQ 700 and InSite or a laptop is taking place. This message also estimates the time required to complete the transfer.
Insite Unavailable: Diags Active	The InSite and diagnostic PC accesses cannot be run at the same time. Use the EXIT in the menu bar of the diagnostic software to put the system back into applications. Then prep the machine for InSite access with [Code I].
Intermittent AcFail signal (Power Glitch?)	An intermittent AC power problem can shut down the LN/HV PS2, causing the loss of FE power and because the FECT is in the Front End, a loss of system clocks. An ACFail that lasts long enough becomes a Power Down. Monitor the AC line coming into the unit. Verify that the AC cord wraps around the rear cover in a CCW direction so that the plug hangs down. This way no one will tuck it under the cord and possibly loosen the connection to the machine.
Intermittent carrier detect signal (bad service port connection?)	Suspect a bad cable connection between the diagnostic PC or InSite modem and the SERVICE port on the LOGIQ 700.
Internal INSITE E2PROM buffer corrupted for XYZ FRU.	The EEPROM on the xyz contains corrupt data and cannot be trusted. The xyz must be replaced to get rid of this message. The backplanes are the only boards that can be repaired by replacing the EEPROM.
Invalid INSITE power–on–hours (–1) reset to zero in PIA. Invalid INSITE power–on	If the Power On Hours value reported by the System Configuration Log is greater than 99999, the system resets POH to zero. This number equals 38 years of 50 hour weeks, or more than 11 years of being ON constantly.
Key not valid	A special MOD disk is required to access diagnostic software. This disk must be compatible with the system software and current. The disk may be ruined through use on a machine with an unusual date.
Keyboard failure at entry n	There was a problem in host to front panel communication path. This path includes the MC, OP I/O cable, and OPI/CPU.
Keyboard Stuck	If the keyboard is not faulty, a fault in the footswitch or OP I/O cables inside or outside the unit may be causing the problem.
Loopback connection verified	This message indicates the host determined the ‘funny’ probe is actually a loopback.
Loopback Err Addr=%08X, read=%08X, wrote=%08X, brd=%s	This message indicates a VME test error. There is a problem on the tested board or possibly with the VMEbus.
No bootable media found	While power up is happening, the system monitor is inactive. Watch the softkey display for status messages during this time. This message means the host cannot find system software. If the system still will not boot after reloading system software, the hard drive is bad; replace the hard drive and reload software.

TABLE 8–2
DESCRIPTIONS OF SYSTEM ERROR MESSAGES (SHEET 6 OF 10)

Message	Meaning
No disk. Check disk drive	Host cannot find/read a disk in the MOD.
No Valid Software found. Previous SW Installation unsuccessful or corrupted. ...	The host cannot find the operating software, perhaps due to a Service Key in the MOD. Press EJECT button & reboot. This message could also mean that the SCSI bus is unstable or blocked by a pinched ribbon or bad connection or a bad drive or SCSI termination. If the MOD provides termination, all three CNH1 jumpers must be installed. If a terminator is used, all CNH1 MOD jumpers must be inserted into only one hole.
Option disk bound mismatch	Software options become bound to a system when they are first loaded. The system's serial number is encoded on the MOD disk when it is used for the first time. The serial number on this Option Disk does not match the system serial number.
Out of Insite Memory. Data Size %04X. Memory Size %04X	The configuration EEPROM on a circuit board can be written to many times but eventually the EEPROM's capacity is reached and the board must be replaced.
pHILE Function _create_f	Host could not create a file.
pHILE Function _lseek_f	The pHILE+ Function is the file manager. Suspect hardware that manages file I/O like the SCSI system.
pHILE Function _open_f	Host could not open a file. Perhaps that file is missing.
pHILE Function _read_f	A file is missing or corrupt.
pHILE Function _read_vol	Host could not read the hard drive or MOD.
pNA+ Function _bind	The host was unable to create a socket of communication to the network through the ethernet port. Error code 5030 = IP address already in use; 5032 = Network is down; 5033 = Network is unreachable
pNA+ Function_send_to	The operating system could not send to the network. Ensure network configuration is correct and that gateway is working.
Port not valid for this device	The Peripherals Presets do not match the actual hardware configuration. The devices configured in System Presets [Code P] must accurately describe the peripheral attached to a Serial, Print, or Ethernet Port on the unit. The 'Printer Control' choices for P1, Shift P1, P2, Shift P2, describe the devices, remote as well as local, to receive the image when that key is pressed. Type [Code P] and correct the General System Presets. The Port choice tells the host which bulkhead connection to use to send and receive RS–232 (serial) or other local print command signals. Choices: Serial Port 1, Serial Port 2, Serial Port 3, Print, Expose–1, Expose–2. Remote print requests travel the Ethernet port.
Power Down at 08/02/1995 17:48:0508/03/1995 08:09:56 1234567	The system stores the time when the machine was turned off if it has enough time. When it reboots this information is retrieved and reported in the error log. If the data is not saved, the turn off is considered an UNKNOWN SHUTDOWN. The power down message may appear after the next powerup errors are logged. Intermittent AC power into the machine may be called a Power Down or as an Unknown Shutdown if the interruption lasts long enough.
Power supply check: Possible I2C or A/D failure on device %02x.	The EQ uses A/Ds to convert FE power available at the EQ to do a FE power check. The VP does the same for the Back End.

TABLE 8–2
DESCRIPTIONS OF SYSTEM ERROR MESSAGES (SHEET 7 OF 10)

Message	Meaning
Power Supply Exhaust temperature sensor has failed.	The host stops monitoring a sensor and any temperature relationships (deltas) involving the sensor if the sensor's reading is not within 2 and 80 degrees Celsius. Repair the sensor as soon as possible.
Power Supply tolerance check: 12VP_BE = 9.13	If this message appears without any hardware problems, sampling error in calculating that power. 12VP_BE, needed by the host for serial and SCSI communication, and all back end power levels except 12VN are monitored by the VP. All power outputs, not just the back end, will be bad if the AC line is out of tolerance or the 5V outputs from PS2 are bad. All Front End voltages will be reported as bad when they are not if 12VPA_FE (PS2) is out of tolerance. The EQ board derives 5VPA_REF_FE from this PS2 output to use for analog calculations. The VP derives 5VPA_REF_BE from PS1 output 12VPA_BE for Back End power calculations. Refer to Power Info Query or Table for details about power levels and uses.
pREPC Function _fopen	An operating system software problem; a file was not found or was left open. Turning off unit power while the host is accessing a file on the hard drive or MOD can corrupt the hard drive or MOD.
pREPC Function _sscanf	Host is having a problem reading in data
Presets not loaded, version mismatch	Older software (ie. R7.X) PRESETS cannot be reloaded from an incompatible software version.
Printer Not Responding	Verify the printer is ON and connected to the correct port on the bulkhead as listed in the [Code P] General System Page 4 Presets.
Probe EEPROM FRU Missing, Probe Socket 4, Probe ID 0x89	The 348C probe is attached to the rightmost socket. The host identified the probe by its PTY bits but could not find the probe's EEPROM content. Try to enter the data on the rating label. If the data entered does not appear in the System Configuration Log, call Tech Support to find out if the lack of data matters.
Probe File Erased for Conn n	The system allocates 40% of the hard disk space to probe files. If that space is full, the system determines which probe was last used the longest time ago and removes that probes files from the system disk.
Probe Present/Onhook status bits unstable. Last reading = 0x%2x	The EQ board latches eight XDIF signals derived from XD0n (n=1,4) PTY and HK signals. Four signals indicate whether a probe is attached to a particular slot. Four signals indicate whether the probe in each slot is on or off the hook. Inserting or removing a probe causes these bits to change, alerting the host to check PTY and change the active probe parameters. If the state of these bits bounce due to a slow mechanical connection for more than a few hundred milliseconds, the status bits are declared unstable, and an error is logged.
Probe XD04 PTY ID bits unstable. Last reading = 0x%2x	The EQ board also latches the PTY bits from the active probe slot. PTY bits determine what kind of probe is in the slot, and the value must match the contents of probe's IIC EEPROM. If the PTY bits bounce for several hundred milliseconds, this error is logged. Latch probes quickly.
pSOS Function _q_send	The host is trying and failing to send a queued file somewhere.
pSOS Function _tm_wkwhen	The host CPU Real Time Clock is trying and failing to update system time after being off. The MC/PIA may require replacement if this message keeps reappearing. One occurrence puts about 600 entries in the Error Log in 30 seconds.

TABLE 8–2
DESCRIPTIONS OF SYSTEM ERROR MESSAGES (SHEET 8 OF 10)

Message	Meaning
Read failure accessing the DP INSITE E2PROM.	The system uses the VMEbus to read the Back End board configuration and may have a more general problem than a bad EEPROM on the DP board. Multiple errors indicate a system failure. If they are all Front End boards then either the power levels needed to perform FE IIC functions have failed or the EQ to FECT to CPU control cable to SS to host path has a problem. The EQ or VP needs 5V, 2VN, 5VPA, and 12VPA for IIC functions. Where the EQ gathers data for all FE EEPROMs, the VP only gathers the data from the BE.
Service key – last used date wrong	The system records the date/time stamp of the system each time the service key is used. If the date/time indicated by the current system is prior to the last time date/time stamped on the key, the system disables the key.
Service Key expires in 37 days	Make it a practice to watch the LOGIQ 700 monitor when attempting to access diagnostics. The host will provide pertinent information similar to this message.
Socket 2 Probe EEPROM ID = 0x57 not equal to connector ID = 0x49	An example; other identifiers can be present. Probe ID data is burned into the probe's EEPROM as a Hex Code by configuration software. ID data is also electromechanically manufactured into the probe connector as PTY bits. This message says the two sources do not agree. Ignore errors that complain about the loopback; its EEPROM (0x00) and connector (0x7f) are currently designed to disagree. The MSB is PTY 7. If the PTY is valid, the host will read and use the data in its EEPROM. If the mechanical connection resulted in an erroneous PTY read, the probe will be misidentified on the VFD (softkey display) and faulty probe behavior could result. Code S will display what the host sees.
Software update needed to use 546L	Probe behavior is controlled by software. A probe cannot be safely used until the software has been modified and validated for that probe. This message will appear for future probes that are not yet allowed on your current software.
Switch Default Case. Routine=xy_config_reg_A Switch=xy_zone_state	One software routine may not interact smoothly with another module; if some event was not programmed as a possibility and the current routine does not know what to do, the routine will reset to use parameters for a default case.
System halted due to overheating	EQ has turned off HVN because the temperature monitoring ADC circuits have calculated that the unit is too hot. See page 8–36 for causes and corrections.
System Serial numbers stored in backplane EEPROM's do not match	If the backplane is replaced, use the Configuration Log to enter the System model and System serial number in addition to the FRU data into the replacement. This is a redundant system to help assure accurate system data is maintained. The system model and serial number are listed on the unit's rating plate. Software checks that the entered serial numbers match. The data is retrievable from the backplanes' EEPROM via the Configuration software and the appropriate Front End (EQ) or Back End (VP) IIC controller and bus.
Unable to read Power Supply temperature. Possible I2C failure.	Run Probe Control diagnostic to see if EQ IIC temperature sensing is working. The FECT relays EQ temperature status to the SS for delivery to the host. Inspect Temp Sensor and FE CPU Control cabling; verify that needed voltages are in tolerance (5V_FE, 2VN_FE, 5VPA, 12VPA_FE, 15VPA, 15VNA); check that EQ (A14–P1) temp signals are present.

TABLE 8–2
DESCRIPTIONS OF SYSTEM ERROR MESSAGES (SHEET 9 OF 10)

Message	Meaning
`Unsupported probe type`	Probe behavior is controlled by software. Until software has been created, validated, and approved for a probe, the probe is unusable.
`VBLANK delivery timeout`	Vertical Blank is an interrupt that the VP generates to signal the host to update registers. There are no diagnostics to test this functionality. Because VBLANK and VSAFE are the highest level interrupts to the host, failure of the system to deliver these requests means there is something major preventing operation. A bad LN/HV (PS2) is a likely suspect.
`VERIFY_VOL error: FD in use by more than 1 file`	If the user cannot archive images and this message appears before software is about to be reloaded, the hard drive needs to be reformatted (reformatting is optional).
`VME ASIC Error Addr=%08X, read=%08X, wrote=%08X, board=%s`	If just one error, the board's EEPROM is bad. If multiple errors of this type for several boards, then there might be a backplane problem.
`VSAFE delivery timeout`	Video Safe is an interrupt that the VP generates to signal the host to update gray maps and video LUTs. There are no diagnostics to test this functionality. Because VSAFE and VBLANK are the highest level interrupts to the host, failure of the system to deliver these requests means there is something major preventing operation. A bad LN/HV (PS2) is a likely suspect.
`WARNING – Unable To Find Valid TD Drawing Number(s)! – Using New TD Parameters`	The parameters that RF tests use depend on board model. The software checks the EEPROMs for TD board model, XDIF model, and RF cables stored on the backplane. If the data in the EEPROM is incorrect, the software assumes that the models are the most current ones. Use the diagnostic System Configuration Log to review and correct model numbers.
`WARNING: H.V. Fault. Call service.`	Describes power fault detected by Front End. The probable cause of this error is a failed TD board (High Voltage Fault at TD Board nn). Look at the Error Log. The cause could also be an FE wiring run or component that helps to monitor this fault. This signal path involves all Front End boards. A bad TD board can send an HV fault interrupt to the FECT for the host and to the EQ which will turn PS2 (LN/HV) off. Relatch the probe to reset the FE and see if problem goes away. If the problem persists, run the diagnostic HV Faults Interrupts to help determine whether a particular TD board is drawing more than 20 Watts. Remove suspect board: if Fault goes away and HVN stays on, the problem was in the removed board. Also measure HVN current and voltage (connect DVM with power off but monitor with power on) to determine whether the LN/HV PS HVN output is exceeding 100 Watts or 3.7 A for more than 100 msec.
`WARNING: Overheating. Check filter.`	The INTAKE temperature sensor has reached the second, more extreme level. If an extreme temperature problem is not corrected, the system will stop working and hardware could be damaged. Only operate the system with all covers installed. Keep intake and power supply filters clean. ATTENTION: Do not reverse filter. Notice the arrow on the air filter. The arrow must point into the machine. If it points out, embedded dirt will be blown into the console. This would clog the power supply filters. Reasons for over–temperature condition: –Room too hot –Unit too close to wall or room heating source –Unit vents are blocked –Air flow covers inside unit are not all in place –Unit cooling fans not working –Transformer shorted –Air flow around a unit sensor is obstructed –Unit air filter is blocked by dirt or cables; inserted backwards –Power supply filters are blocked by dirt or cables – Monitor cables obstructing air flow; tie them to upper frame –Peripheral cables obstructing air flow above card cage; place them inside peripheral cover

TABLE 8–2
DESCRIPTIONS OF SYSTEM ERROR MESSAGES (SHEET 10 OF 10)

Message	Meaning
`WARNING: Probe overheat–call service`	Either the endo probe is too hot or an electrical fault has erroneously caused this message. The resistance between V0 and U0 on the probe should be 2250 ohms at 25ºC (77º F) and 1200 ohms at 40ºC (104º F). The path is probe thermistor to XDIF through probe control cable to backplane to EQ to FECT to SS to host. Run XDIF Wrapback and Probe Control diagnostics to see if system paths and circuitry are working. Monitor Temperature Log while applying heat or cold to the active 618e probe and checking response. See what happens when probe is shifted to another XDIF slot.
`WARNING: System overheating`	The FE IIC network implemented by the EQ has noted that the INTAKE unit sensor temperature has exceeded its WARNING threshold.
`Write enable Service Key – ejecting`	The small square opening in the MOD disk must be closed. Slide the plastic square to cover the hole. The system needs write access in order to write the last date used on the KEY; if the Service Key disk is WRITE PROTECTED, the disk is ejected.
`Write failure while updating the BP INSITE E2PROM.`	The system could not write to the EEPROM on the backplane. The VP VME interface, the IIC circuitry, or the backplane EEPROM socket may have a problem.
`XY E2PROM Write Err at offset %02X. Wrote=%02X, Read=%02X`	The host could not write to the configuration EEPROM on the XY board. The problem could be an XY VME I/F or an InSite EEPROM problem.

Intentionally blank

SECTION 9 – RENEWAL PARTS

TABLE OF CONTENTS

SECTION	TITLE	PAGE
9–1	PURPOSE OF SECTION	9–2
9–2	ARRANGEMENT OF SECTION	9–2
9–3	EQUIPMENT MODELS COVERED IN THIS SECTION	9–3
9–4	ABBREVIATIONS/CONVENTIONS USED IN THIS SECTION	9–4
9–5	KITS	9–4
	PARTS LIST GROUPS:	
	PROBES	9–5
	SIDE COVERS, REAR COVERS, AND MONITOR ASSEMBLY	9–8
	FRONT COVERS, XDIF, AND OPERATOR CONTROL PANEL	9–12
	BACKPLANE	9–22
	CARD CAGE	9–24
	COOLING	9–26
	REAR BUMPER, POWER SUPPLIES, BULKHEAD, AND PERIPHERAL BULKHEAD	9–28
	HARD DRIVE AND MOD	9–36
	TEMPERATURE SENSORS	9–38
	AC POWER	9–40
	RF SHIELDS AND GASKETS	9–46
	FRAME	9–50
	SOFTWARE	9–58
	KITS	9–59
9–6	PACKING CIRCUIT CARDS FOR RESHIPMENT	9–68

9–1 PURPOSE OF SECTION

This section contains an illustrated parts breakdown that identifies the renewal parts for the LOGIQ 700. The information in this section can be used to locate and identify parts, to determine the correct name and part number for a item, and to determine whether the item is a Field Replaceable Unit (FRU).

While the illustrations and tables in this section may be helpful when performing certain maintenance functions, this section is not intended to replace maintenance procedures found in other sections of this manual or related manuals. To perform a maintenance function, always refer to the applicable maintenance section.

9–2 ARRANGEMENT OF THIS SECTION

For the most part, this section consists of illustrations and tables. An illustration shows the breakdown of parts within the assembly/subassembly named in the illustration title. Each part in an illustration is assigned an item number. Generally, these item numbers correspond to similar numbers used on the related engineering assembly drawing.

To provide the parts identification information, a parts listing table is provided for each illustration. Listings in the table are keyed to the item numbers used in the illustration. This table is normally located on the page facing the illustration.

When the illustration and accompanying table are small, both are placed on the same page. In a few cases, where the parts list for an illustration exceeded one page, the illustration is repeated so that same illustration faces both the first and second page of the parts list. To flag this situation the title of both the second page of the illustration and the table end with “(Continued)”.

Illustrations and their corresponding tables are arranged in groups within the section. Each group is assigned a group name and the group name is repeated at the top left of each illustration or table page for that group. The groups used in this section, listed in the same sequence they appear, are as follows:

- Probes
- Side Covers, Rear Covers, and Monitor Assembly
- Front Covers, XDIF, and Operator Control Panel
- Backplane
- Card Cage
- Front End
- Cooling
- Rear Bumper, Power Supplies, Bulkhead, and Peripheral Bulkhead Assembly
- Hard Drive and MOD
- Temperature Sensors
- AC Power
- RF Shields and Gaskets
- Frame
- Kits

9–3 EQUIPMENT MODELS COVERED IN THIS SECTION

This manual covers the latest version (V4) of the LOGIQ™ 700. There are several models, each configured to operate from a different voltage power source or to provide power for on–board peripherals at a different voltage. The models #'s covered in this section are as follows:

- Basic version:
  - Model 2184000 — Expert Series – 120 Vac Input/120 Vac Peripherals
  - Model 2184000–2 — Expert Series – 220 Vac Input/120 Vac Peripherals
  - Model 2184000–3 — Expert Series – 240 Vac Input/240 Vac Peripherals
  - Model 2184000–4 — Expert Series – 100 Vac Input/100 Vac Peripherals
  - Model 2184000–6 — *Expert Series – 120 Vac Input/120 Vac Peripherals
  - Model 2184000–7 — *Expert Series – 220 Vac Input/120 Vac Peripherals
  - Model 2184000–8 — *Expert Series – 240 Vac Input/240 Vac Peripherals
  - Model 2184000–9 — *Expert Series – 100 Vac Input/100 Vac Peripherals
  - Model 2184000–11 — Pro Series – 120 Vac Input/120 Vac Peripherals
  - Model 2184000–12 — Pro Series – 220 Vac Input/120 Vac Peripherals
  - Model 2184000–13 — Pro Series – 240 Vac Input/240 Vac Peripherals
  - Model 2184000–14 — Pro Series – 100 Vac Input/100 Vac Peripherals

  *Upgraded to BT99 from a Pre–BT98 unit

9–4 ABBREVIATIONS/CONVENTIONS USED IN THIS SECTION

The abbreviations and conventions used in this section are defined below.

Abbreviation	Used In	Meaning
AR	Parts list Qty column	As required. Usually used with bulk supplied items such as caterpillar grommet.
FRU	Parts list column title	Field Replaceable Unit: Number (1 or 2) indicates FRU level, ”KIT 1” indicates replacement item is furnished in kit 1, ”N” means not replaceable.
NHA	Parts lists	See next higher assembly
QTY	Parts list column title	Quantity of this item used in this illustration
REF	Parts lists and illustrations	Part listed or shown for reference purposes only – part may be shown and listed in another place
X	Parts lists and illustrations	In illustration, example: ”3X 28” means 3 of item 28. In part list, example ”M8x0.8x8mm” means M8 by 0.8mm pitch by 8 mm long.

9–5 KITS

To reduce costs, small items such as attaching hardware are supplied in kits. Kits have been assigned numbers or letters to enable referencing within this section. If, as an example, a screw that is part of Kit 1 is listed in the parts list, the FRU column entry for that screw is ”KIT 1.” The example entry means:

- The screw is replaceable,
- there is no entry in the part number column, because
- the part is obtained by ordering Kit 1, and
- the size or description information in the Comments column of the parts list should be used to select the right part from the kit.

PROBES

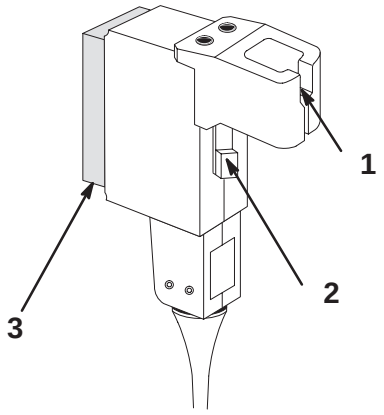

PROBES AND RELATED ITEMS
ILLUSTRATION 9–1

TABLE 9–1
PROBES AND RELATED ITEMS

ITEM	NAME	FRU	PART NUMBER (CATALOG NUMBER)	QTY	DESCRIPTION
1	PROBE YOKE ASSEMBLY	1	2104040		One per nonspecialized probe.
	PROBE YOKE ASSEMBLY		2186153		For M3c, M7c, and M12L probes
2	PROBE LATCHING MECHANISM	1	2130769		One per probe
3	227s PROBE	1	2138306 (H7227S)		Abd/OB/GYN
	227s PROBE (with ferrite bead)		2236014 (H7227S)		Ped/Sm Parts 2.75 to 5.0 MHz
	546L PROBE		2156814 (H7546L)		Ped/Sm Parts 2.75 to 5.0 MHz
	546L PROBE (with ferrite bead)		2236015 (H7546L)		Ped/Sm Parts 2.75 to 5.0 MHz
	739L PROBE		2156813 (H7739L)		Sm Parts/VAS/PED 7.5/5.0 MHz
	739L PROBE (with ferrite bead)		2236012 (H7739L)		Sm Parts/VAS/PED 7.5/5.0 MHz
	LA39 PROBE		2153917 (H7039L)		Small Parts/PV
	LA39 PROBE (with ferrite bead)		2236013 (H7039L)		Small Parts/PV
	M12L PROBE		2187718 (H7039ML)		
	M12L PROBE (with ferrite bead)		2236016 (H7039ML)		
	618e PROBE		2111172 (H7618E)		TV/TR 6.25/5.0 MHz
	618e PROBE (with ferrite bead)		2236952 (H7618E)		TV/TR 6.25/5.0 MHz
	348c PROBE		2175841 (H7348C)		Abd/OB/GYN
	348c PROBE (with ferrite bead)		2236018 (H7348C)		
	548c PROBE		2175250 (PD)		Rad/OB 5.0/3.75 MHz
	618c PROBE		2111173 (H7618C)		Neonatal/PED/Vascular
	618c PROBE (with ferrite bead)		2236953 (H7618C)		Neonatal/PED/Vascular
	M3c PROBE		2189907 (H7364MC)		
	M7c PROBE		2238580 (H7753MC)		
	3Sr PROBE		2255162 (H4003S)		
	8S PROBE		2266327 (H4008S)		
	i12L PROBE		2264882 (H4012L)		

PROBES

ITEM	NAME	FRU	PART NUMBER (CATALOG NUMBER)	QTY	DESCRIPTION
A	BIOPSY KIT		E8385MC		Use with 739L probe
			E8385MG		Use with 348c or 548c probe
			E8385ML		Use with 546L probe
			E8385MM		Use with LA39 probe
			E8386CF		Use with 618e probe
			E8395MB		Use with 547L probe
B	NEEDLE GUIDES		E8385LC		Use with biopsy kit E8385M_
			E8386CB		Use with biopsy kit E88386CF
			E8395LC		Use with biopsy kit E8395MB
C	DISPOSABLE GLOVES, LARGE		46–194427P347	100	N–DEX Nitrile
	DISPOSABLE GLOVES, X–LARGE		46–194427P348	100	

Intentionally blank

SIDE COVERS, REAR COVERS, AND MONITOR ASSEMBLY

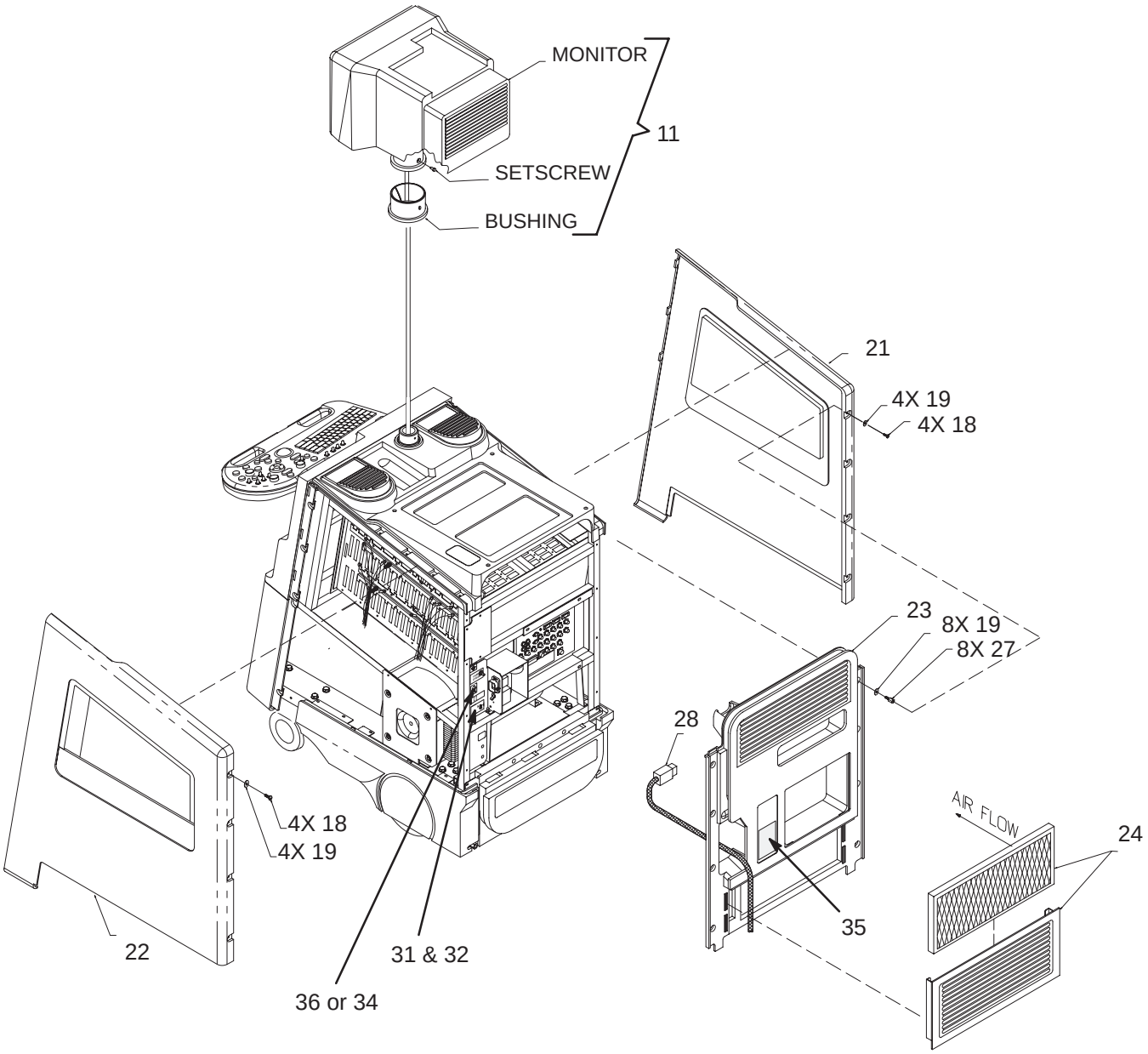

SIDE COVERS, REAR COVERS, AND MONITOR ASSEMBLY
ILLUSTRATION 9–2

SIDE COVERS, REAR COVERS, AND MONITOR ASSEMBLY

TABLE 9–2
SIDE COVERS, REAR COVERS AND MONITOR ASSEMBLY

ITEM	NAME	FRU	PART NUMBER	QTY	DESCRIPTION
11	MONITOR ASSEMBLY	1	46–312044G5	1	See page 9–10 or breakdown.
18	FREEDRIVE PAN HEAD SCREW	KIT 1		8	M5x0.8x8mm
19	FLAT WASHER	KIT 1		16	5.3x15x1.6mm
21	LEFT SIDE COVER	1	2235890	1	Expert Series
			2246002		Pro Series
22	RIGHT SIDE COVER	1	46–330054G2	1	Expert Series
			46–330054G3		Pro Series
23	REAR COVER	1	46–312856G1	1	includes bulkhead cover
24	FILTER ASSEMBLY	1	46–330322G1	1	grill & filter
	AIR FILTER	1	46–330015P1	1	air intake
27	METRIC HEX SPACER	KIT 1		8	male/female
28	POWER CORD				See page 9–45 for listing.
31	CE International Approval LABEL	2	2117390	1	CE
32	CE Mark Class A LABEL	2	2132620–2	1	
34	IEC BF LABEL	2	2114748	1	little man w/box
35	CAUTION LABEL	2	2114639	1	120 Vac Unit
			2116351		non 120 Vac Unit

SIDE COVERS, REAR COVERS, AND MONITOR ASSEMBLY

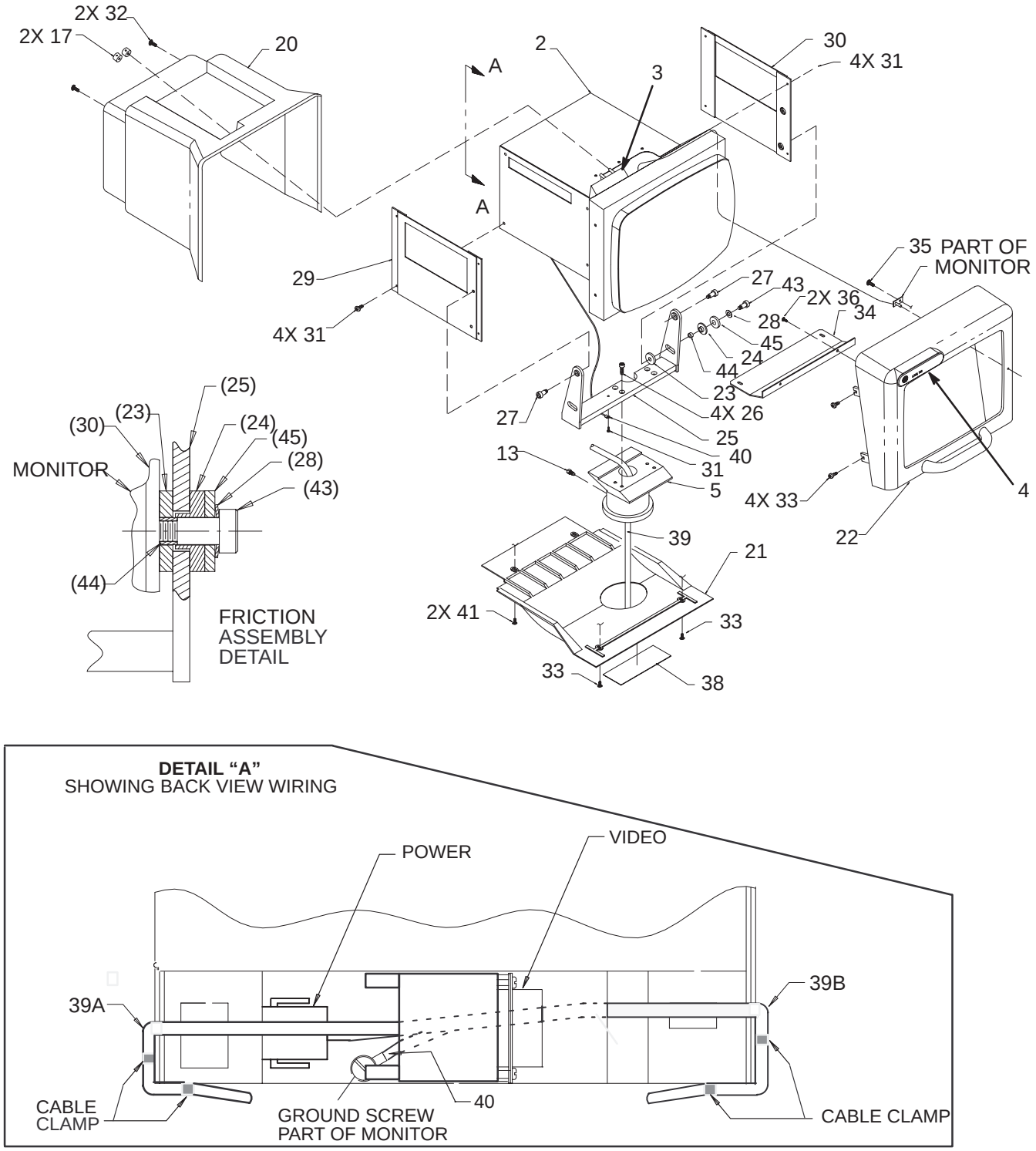

MONITOR ASSEMBLY BREAKDOWN
ILLUSTRATION 9–3

SIDE COVERS, REAR COVERS, AND MONITOR ASSEMBLY

TABLE 9–3
MONITOR ASSEMBLY BREAKDOWN

ITEM	NAME	FRU	PART NUMBER	QTY	DESCRIPTION
1	MONITOR ASSEMBLY	1	46–312044G5	1	Includes cables (items 39 thru 40). Works only with 120 Vac power.
2	COLOR MONITOR	N			Shown for reference only.
3	CONTRAST/BRIGHTNESS BOARD	1	2104564	1	
4	LOGO NAMEPLATE	1	2241551–2	1	Expert Series
			2241551–4		Pro Series
			2241551		MR Expert Series (Japan only)
			2241551–4		MR Pro Series (Japan only)
5	SWIVEL MOUNT	N		1	
13	HEX HEAD SET SCREW	KIT 7		1	M6X12mm
17	MOLDED KNOB	1	2110094	2	16mm with 6mm shaft
20	MONITOR COVER	1	46–326039P1	1	
21	MONITOR BOTTOM	N		1	
22	MONITOR BEZEL	1	46–326038P1	1	
23	FRICTION DISK A	KIT 7		1	
24	FRICTION DISK B	KIT 7		1	
25	BRACKET	N		1	
26	HEX SOCKETHEAD CAP SCREW	KIT 7		4	M6x1x16mm
27	SHOULDER SCREW	KIT 7		2	
28	SPRING WASHER	KIT 7		1	
29	PLATE	N		1	
30	PLATE	N		1	
31	FREEDRIVE PAN HEAD SCREW	KIT 7		9	M4x0.7x6mm
32	FREEDRIVE PAN HEAD SCREW	KIT 7		2	M4x0.7x25mm
33	FREEDRIVE PAN HEAD SCREW	KIT 7		6	M4x0.7x10mm
34	BRACKET	N		1	
35	OVAL HEAD SCREW	KIT 7		1	KA30x8mm
36	OVAL HEAD SCREW	KIT 7		2	KA30x16mm
38	RATING PLATE	N		1	
39	POWER/VIDEO CABLE	N		1	Varies with and is considered part of monitor, includes items 39A and 39B.
39A	VIDEO CABLE	1	2194410–2	1	
39B	POWER CABLE	N		1	
40	GROUND CABLE	2	2109330	1	Varies with and is considered part of monitor.
41	FREEDRIVE PAN HEAD SCREW	KIT 7		2	M4x0.7x8mm
42	FLAT WASHER	KIT 7		4	4.3x9x0.8
43	SHOULDER SCREW	KIT 7		1	
44	SPACER	KIT 7		1	
45	WASHER	KIT 7		1	

FRONT COVERS, XDIF, AND OPERATOR CONTROL PANEL

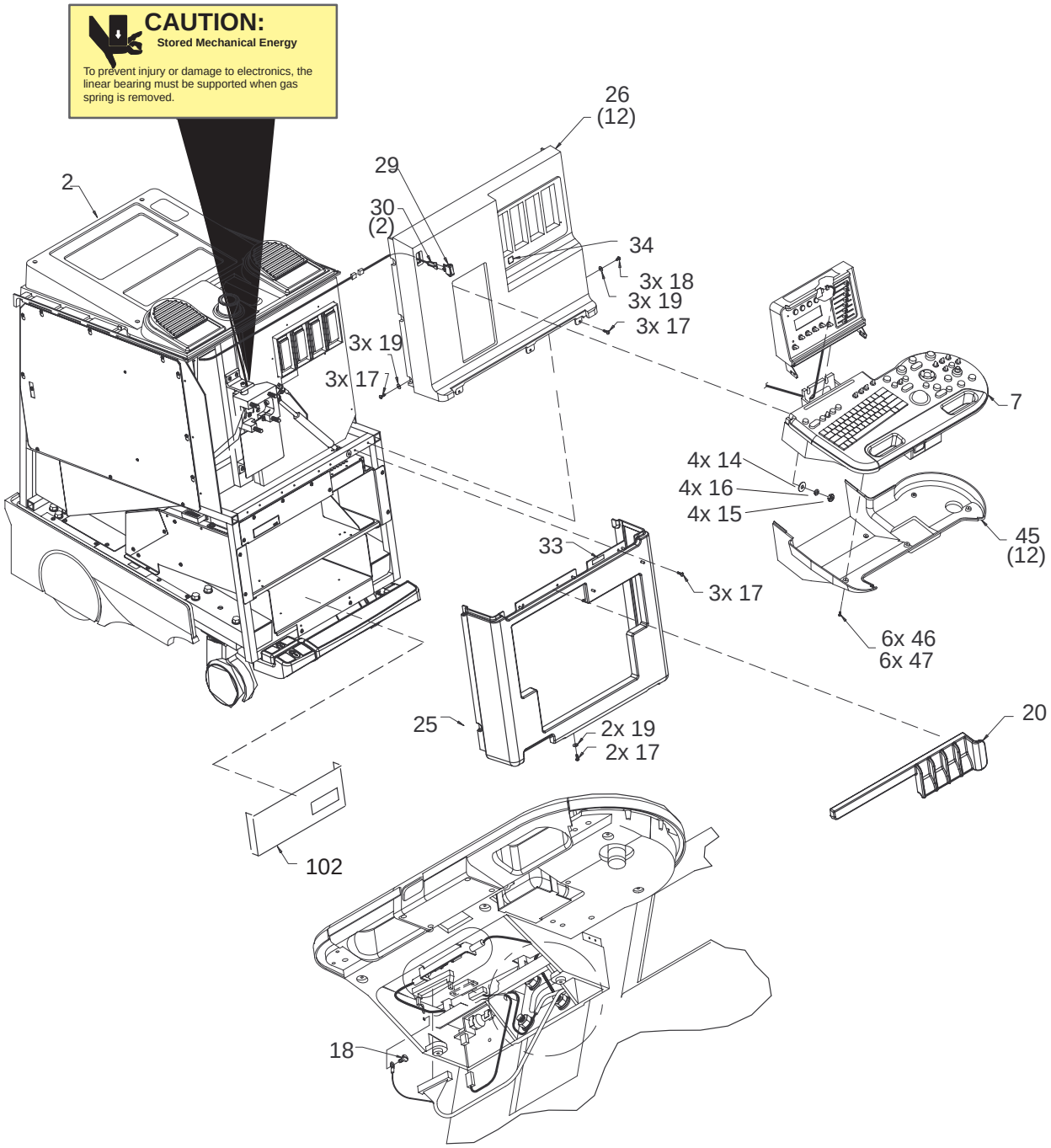

FRONT COVERS, XDIF, AND OPERATOR CONTROL PANEL
ILLUSTRATION 9–4

FRONT COVERS, XDIF, AND OPERATOR CONTROL PANEL

TABLE 9–4
FRONT COVERS, XDIF, AND OPERATOR CONTROL PANEL

ITEM	NAME	FRU	PART NUMBER	QTY	DESCRIPTION
1	TRANSDUCER INTERFACE ASM	1	2132588		XDIF2
7	CONTROL PANEL ASSEMBLY	1	46–312042G5	1	See page 9–14 for breakdown.
11	HAZARD LABEL	2	2119198	1	
14	HEX NUT	KIT 1		4	M10
15	PLAIN WASHER	KIT 1		4	M10
16	LOCK WASHER	KIT 1		4	M10 Spring
17	FREEDRIVE PAN HEAD SCREW	KIT 1		9	M5x0.8x16mm
18	FREEDRIVE PAN HEAD SCREW	KIT 1		3	M5x0.8x8mm
19	FLAT WASHER	KIT 1		9	5.3x15x1.6mm
20	CABLE GUIDE/TRIM	1	2225068	1	
25	LOWER FRONT COVER	1	2226198	1	
26	UPPER FRONT COVER	1	2101772	1	
	PROBE OPENING GASKET	1	46–330060P2	1	
29	ROCKER SWITCH	1	46–312706P1	1	POWER ON/Standby
30	POWER ON SWITCH CABLE	1	46–326264G1	1	
33	SHOCK HAZARD LABEL	2	2114749	2	Located on shield.
34	IEC BF LABEL	2	2114748	1	little man with box
101	POWER ON CABLE EXTENSION	1	46–326265P1	1	From item 30 to J2 on SSR
102	VCR SHIELD	1	2239533	1	Kick panel

FRONT COVERS, XDIF, AND OPERATOR CONTROL PANEL

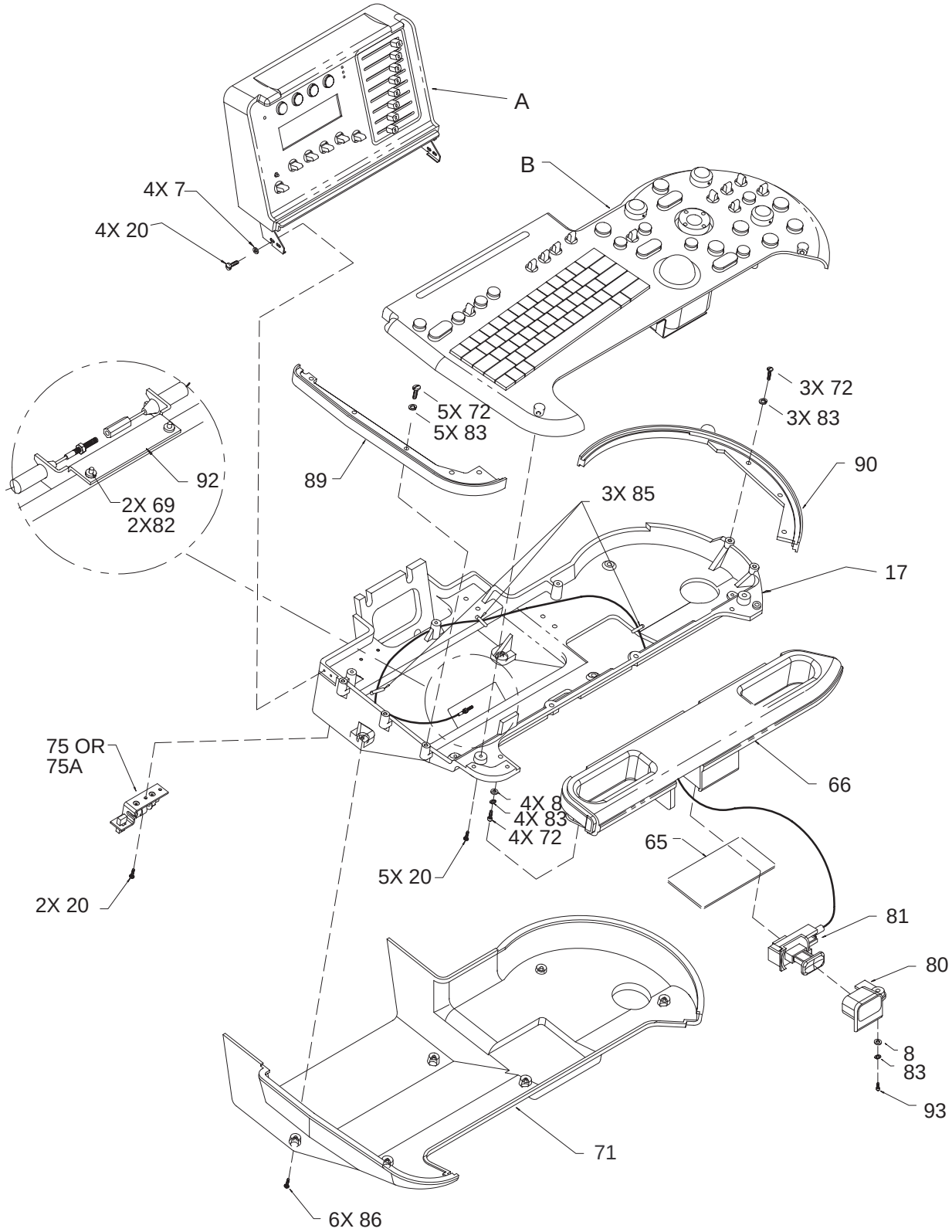

OPERATOR CONTROL PANEL BREAKDOWN
ILLUSTRATION 9–5

FRONT COVERS, XDIF, AND OPERATOR CONTROL PANEL

TABLE 9–5
OPERATOR CONTROL PANEL BREAKDOWN

ITEM	NAME	FRU	PART NUMBER	QTY	DESCRIPTION
A	UPPER OPERATOR PANEL				See page 9–16 for breakdown.
B	LOWER OPERATOR PANEL				See page 9–18 for breakdown.
7	FLAT WASHER	KIT 8		4	3.2x7x0.5mm
8	FLAT WASHER	KIT 8		1	5.3x10x1mm
17	CASTING BASE	2	46–312584P1	1	
20	X–RECESSED PAN HEAD SCREW	KIT 8		11	M3x0.5x8mm
65	THICK FILM	2	2183712	1	Has self–adhesive strips; does not use screws
66	CASTING HANDLE	1	46–312585P1	1	
69	FREEDRIVE PAN HEAD SCREW	KIT 8		2	M3x0.5x16mm
71	OPERATOR PANEL BOTTOM COVER	1	46–312583P1	1	
72	FREEDRIVE PAN HEAD SCREW	KIT 8		8	M5x0.8x12mm
75	TASKLIGHT BRACKET	2	46–312973P1	1	Replaced by item 75A in mid–1998
	TASKLIGHT LAMP	1	46–312973P3	1	
75A	TASKLIGHT BRACKET	2	2207716	1	Replacement for item 75 in mid–1998. Includes bracket, filter, lamp and power connector.
	TASKLIGHT LAMP	1	2183838	1	
80	BEZEL	1	46–330083P1	1	Frames actuator button
81	ACTUATOR & CABLE	1	2114466	1	
82	HELICAL WASHER	KIT 8		2	M3
83	HELICAL WASHER	KIT 8		9	M5
85	CABLE TIE	N		3	Used to hold release cable
86	PAN HEAD SCREW	KIT 8		6	M3x0.5x10mm w/helical lock washer
89	GASKET LEFT	1	2108757	1	
90	GASKET RIGHT	1	2117086	1	
92	TURNBUCKLE BRACKET	2	2114158	1	
93	FREEDRIVE PAN HEAD SCREW	KIT 8		1	M5x0.8x20mm

FRONT COVERS, XDIF, AND OPERATOR CONTROL PANEL

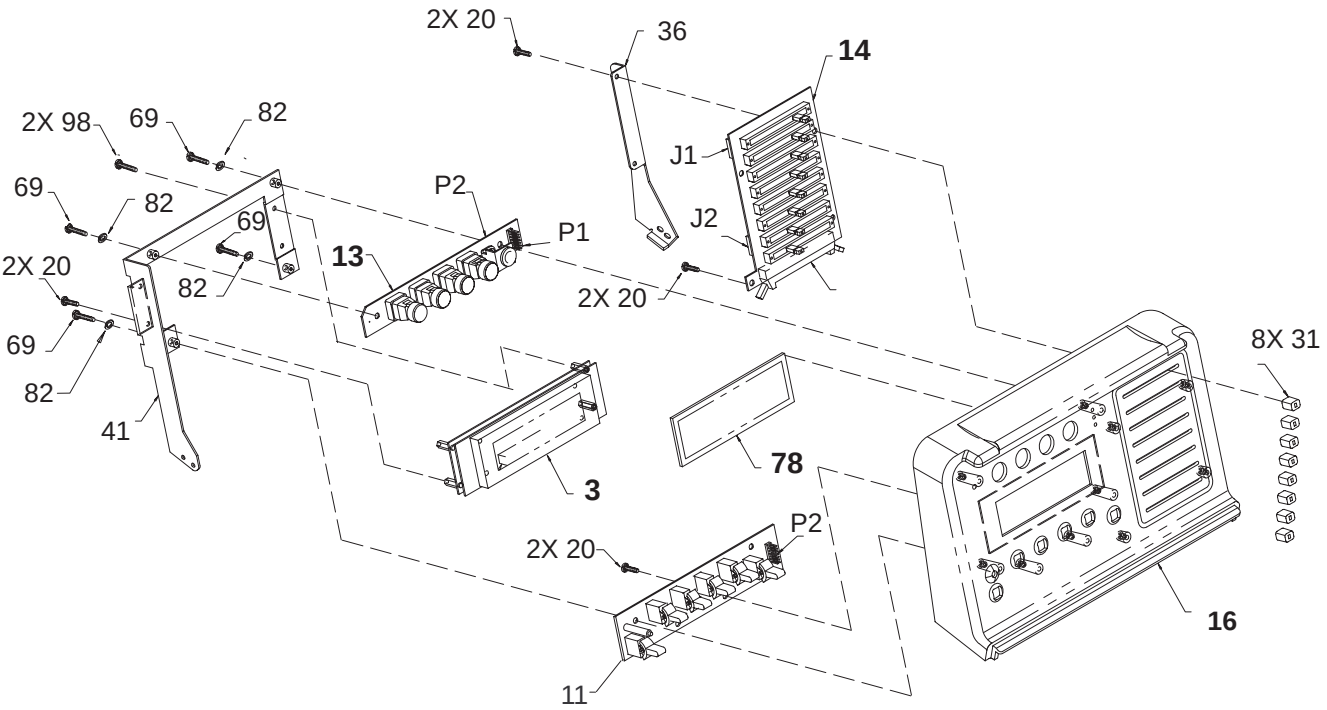

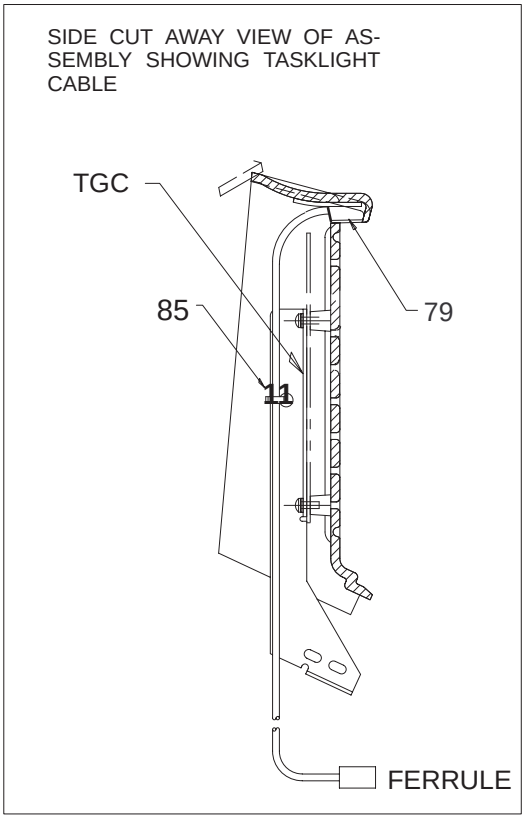

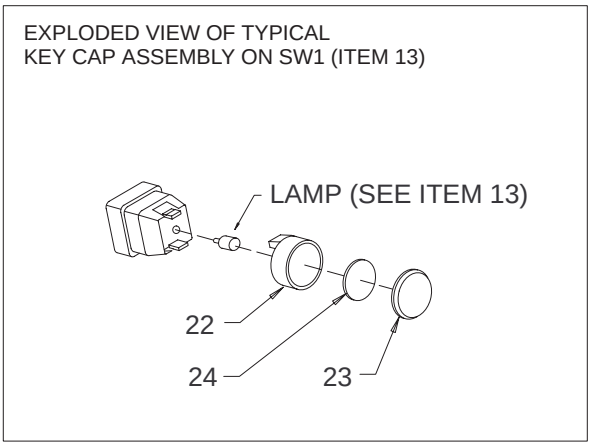

UPPER OPERATOR PANEL BREAKDOWN
ILLUSTRATION 9–6

FRONT COVERS, XDIF, AND OPERATOR CONTROL PANEL

TABLE 9–6
UPPER OPERATOR PANEL BREAKDOWN

ITEM	NAME	FRU	PART NUMBER	QTY	DESCRIPTION
3	VACUUM FLORESCENT DISPLAY	1	46–312443P1	1	VFD
11	SW2 BOARD	1	2104560	1	SW2
13	SW1 BOARD	1	2104559–3	1	SW1
	SWITCH LAMP	1	46–238163P3	4	
14	TGC BOARD	1	2192237	1	TGC (does not include caps)
16	UPPER PANEL COVER	1	2142644	1	
20	PAN HEAD SCREW	KIT 8		10	M3x0.5x8mm
22	SWITCH CAP	KIT K		4	16mm (Kit K is 2122406–5)
23	LENS	KIT K		4	16mm (Kit K is 2122406–5)
24	DIFFUSER, B FLOW	KIT K		1	16mm (Kit K is 2122406–5)
	DIFFUSER, AUTO 3D	KIT D		1	16mm (English Kit D is 2122406–2) (Spanish Kit D is 2134444)
	DIFFUSER, HARMONICS	KIT D		1	(French Kit D is 2134445) (German Kit D is 2134446)
	DIFFUSER, MULTI FREQ	KIT D		1	(Italian Kit D is 2134447) (Portuguese Kit D is 2241409) (Swedish Kit D is 2243243) (Danish Kit D is 2243244) (Turkish Kit D is 2243245) (Russian Kit D is 2243246) (Greek Kit D is 2243247)
31	SLIDE POT CAP	KIT S		8	Kit S is 2122406–4
36	BRACKET UPPER OPI RIGHT	2	46–312762P1	1	
41	BRACKET	2	46–312816P1	1	
69	FREEDRIVE PAN HEAD SCREW	KIT 8		3	M3x0.5x16mm
78	VFD FILTER	1	46–326058P1	1	
79	TASKLIGHT CABLE	1	46–312973P2	1	
82	HELICAL WASHER	KIT 8		3	M3
85	CABLE TIE	N		1	Used to hold tasklight cable
98	FREEDRIVE PAN HEAD SCREW	KIT B		2	M3x0.5x8mm

FRONT COVERS, XDIF, AND OPERATOR CONTROL PANEL

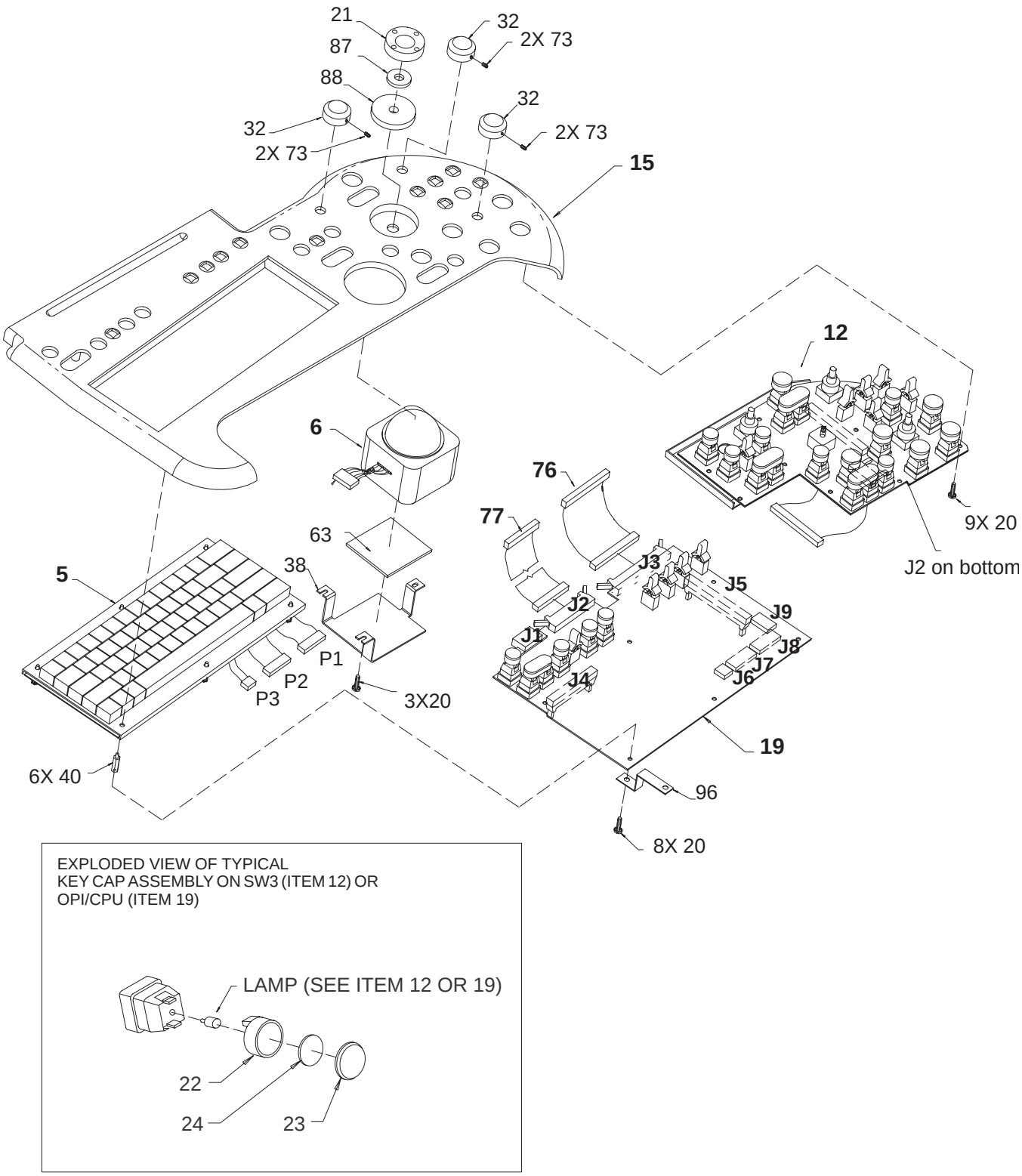

LOWER OPERATOR PANEL BREAKDOWN
ILLUSTRATION 9–7

FRONT COVERS, XDIF, AND OPERATOR CONTROL PANEL

TABLE 9–7
LOWER OPERATOR PANEL BREAKDOWN

ITEM	NAME	FRU	PART NUMBER	QTY	DESCRIPTION
5	KEYBOARD – ENGLISH	1	2228209	1	BT99
	KEYBOARD – ENGLISH		2228209–7		BT00
	KEYBOARD CAP KIT – SPANISH		2243478		Use to customize keyboard
	KEYBOARD CAP KIT – FRENCH		2243480		
	KEYBOARD CAP KIT – GERMAN		2243481		
	KEYBOARD CAP KIT – ITALIAN		2243482		
	KEYBOARD CAP KIT – SWEDISH		2243483		
	KEYBOARD CAP KIT – DANISH		2243485		
	KEYBOARD CAP KIT – TURKISH		2243486		
	KEYBOARD CAP KIT – RUSSIAN		2243488		
	KEYBOARD CAP KIT – GREEK		2243489		
	KEYBOARD CAP KIT – PORTUG.		2243492		
6	TRACK BALL	1	46–312442P1	1	
12	SW3 BOARD	1	2104561–3	1	SW3 with single rotary encoder
	SWITCH LAMP	1	46–238163P3	5	
15	TOP PANEL COVER	1	2142645–2	1	Labels in English
19	OPI/CPU BOARD	1	2104562–2	1	
	SWITCH LAMP	1	46–238163P3	15	
20	(TYPE) SCREW	KIT 8		20	M3x0.5x8mm
21	ROI ROCKER SWITCH	KIT M		1	(Kit M is 2122406–3)
22	SWITCH CAP	KIT K		9	16mm (Kit K is 2122406–5)
	SWITCH CAP	KIT K		7	20mm (Kit K is 2122406–5)
	SWITCH CAP	KIT K		4	Dual (Kit K is 2122406–5)
23	LENS	KIT K		9	16mm (Kit K is 2122406–5)
	LENS	KIT K		7	20mm (Kit K is 2122406–5)
	LENS	KIT K		4	Dual (Kit K is 2122406–5)
24	DIFFUSER, BLANK	KIT K			16mm (Kit K is 2122406–5)
	DIFFUSER, BLANK OR	KIT K		1	20mm (Kit K is 2122406–5)
	DIFFUSER, ASTERISK (*)	KIT P			20mm (Kit P is 2122406–6)
	DIFFUSER, BLANK	KIT K			Dual (Kit K is 2122406–5)
	DIFFUSER, MULTI IMAGE	KIT D		1	16mm (English Kit D is 2122406–2)
	DIFFUSER, PLAY/STOP	KIT D		1	(Spanish Kit D is 2134444)
	DIFFUSER, RECORD	KIT D		1	(French Kit D is 2134445)
	DIFFUSER, ARCHIVE MENU	KIT D		1	(German Kit D is 2134446)
	DIFFUSER, TRACE	KIT D		1	(Italian Kit D is 2134447)
	DIFFUSER, CALIPER	KIT D		1	(Portuguese Kit D is 2241409)
	DIFFUSER, INVERT	KIT D		1	(Swedish Kit D is 2243243)
	DIFFUSER, B FLOW	KIT D		1	(Danish Kit D is 2243244)
	DIFFUSER, AUTO 3D (BT99) and AUTO VIEW (BT2000)	KIT D		1	(Turkish Kit D is 2243245)
	DIFFUSER, HARMONICS	KIT D		1	(Russian Kit D is 2243246)
	DIFFUSER, CURSOR	KIT D		1	(Greek Kit D is 2243247)
	DIFFUSER, CALC	KIT D		1	20mm (Kit D, see above for part number for a specific language)
	DIFFUSER, M	KIT D		1	
	DIFFUSER, CF	KIT D		1	
	DIFFUSER, PW	KIT D		1	
	DIFFUSER, AUTO OPTIMIZE	KIT D		1	
	DIFFUSER, PDI	KIT D		1	
	DIFFUSER, UPDATE	KIT D		1	

FRONT COVERS, XDIF, AND OPERATOR CONTROL PANEL

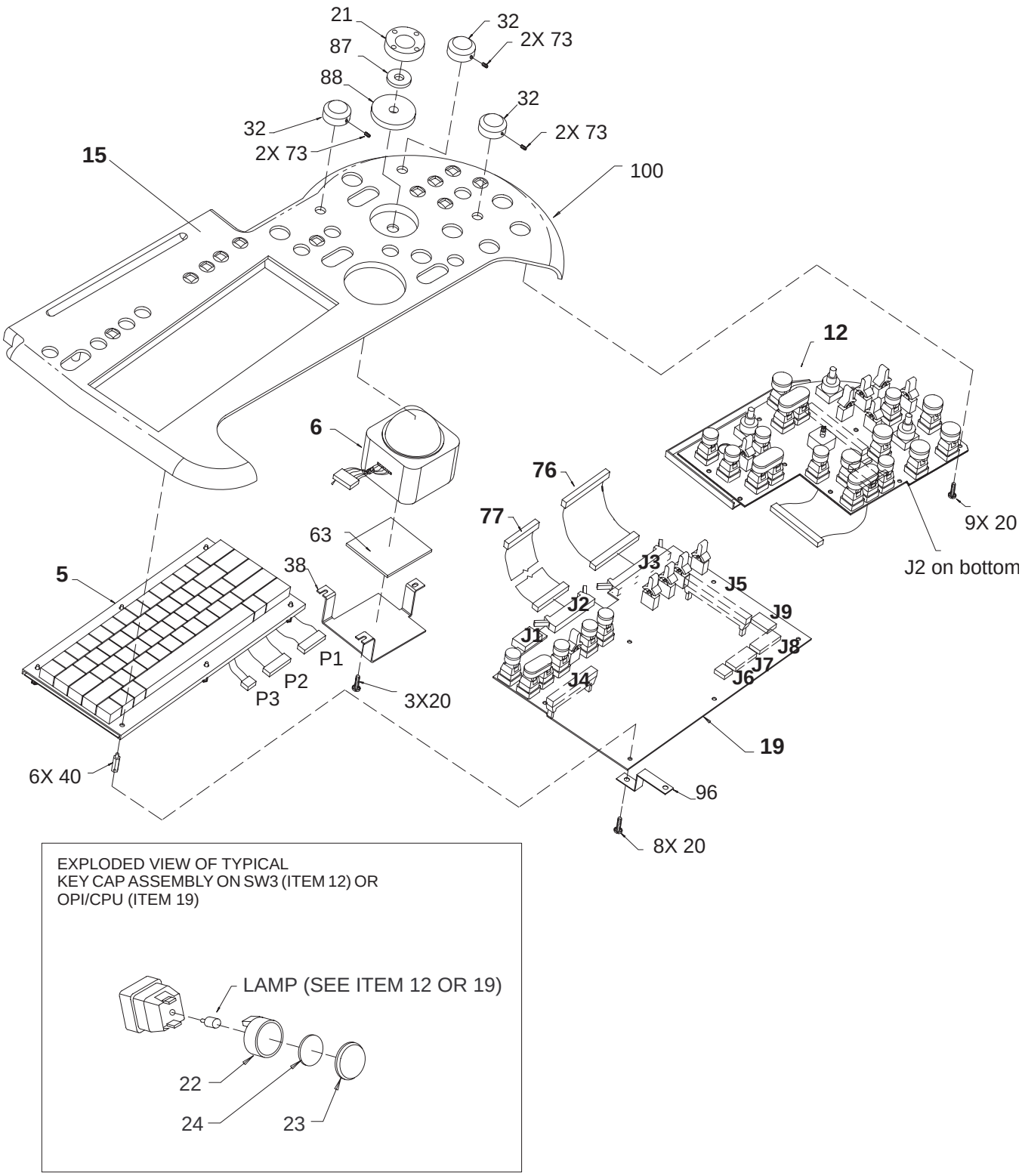

LOWER OPERATOR PANEL BREAKDOWN (Continued)
ILLUSTRATION 9–7

FRONT COVERS, XDIF, AND OPERATOR CONTROL PANEL

TABLE 9–7
LOWER OPERATOR PANEL BREAKDOWN (Continued)

ITEM	NAME	FRU	PART NUMBER	QTY	DESCRIPTION
24 (Cont.)	DIFFUSER, IMAGE SELECT	KIT D		1	Dual (English Kit D is 2122406–2)
	DIFFUSER, SET	KIT D		1	(Spanish Kit D is 2134444)
	DIFFUSER, ZOOM	KIT D		1	(French Kit D is 2134445)
	DIFFUSER, FREEZE	KIT D		1	(German Kit D is 2134446) (Italian Kit D is 2134447) (Portuguese Kit D is 2241409) (Swedish Kit D is 2243243) (Danish Kit D is 2243244) (Turkish Kit D is 2243245) (Russian Kit D is 2243246) (Greek Kit D is 2243247)
	DIFFUSER, COLOR PRINTER P1 DIFFUSER, B/W PRINTER P1 DIFFUSER, DIGITAL ARCHIVE P1 DIFFUSER, EXT. ARCHIVE P1 DIFFUSER, GRAY ARCHIVE P1 DIFFUSER, COLOR ARCHIVE P1 DIFFUSER, CAMERA P1 DIFFUSER, LASER P1 DIFFUSER, MISC. P1	KIT P		1	20mm (Kit P is 2122406–6)
	DIFFUSER, COLOR PRINTER P2 DIFFUSER, B/W PRINTER P2 DIFFUSER, DIGITAL ARCHIVE P2 DIFFUSER, EXT. ARCHIVE P2 DIFFUSER, GRAY ARCHIVE P2 DIFFUSER, COLOR ARCHIVE P2 DIFFUSER, CAMERA P2 DIFFUSER, LASER P2	KIT P		1	16mm (Kit P is 2122406–6)
32	ROTARY ENCODER KNOB	KIT M		3	Single (Kit M is 2122406–3)
38	TRACK BALL BRACKET	2	46–312760P1	1	
39	DOP ENCL BRACKET	2	46–312761P1	1	
40	THREADED HEX SPACER	KIT 8		6	M3x18mm
63	TRACK BALL PAD	KIT M		1	Remove release liner and attach to item 38 (Kit M is 2122406–3)
70	SCREW	KIT 8		3	M3x0.5x6mm
73	SOCKET HEAD CAP SCREW	KIT 8		7	M3x0.5x5mm
76	CABLE, CPU–TGC	1	46–326056P1	1	
77	CABLE, CPU–VFD	1	46–326057P1	1	
87	ROI FOAM PAD	KIT M		1	Remove release line and attach to item 21 (Kit M is 2122406–3)
88	ROI PAD	KIT M		1	Remove release line and attach to item 15 (Kit M is 2122406–3)
96	KEYBOARD GROUND STRAP	2	2119961	1	
100	OVERLAY, SPANISH	2	2153312–2	1	Use to customize operator panel
	OVERLAY, FRENCH	2	2153312–3	1	
	OVERLAY, GERMAN	2	2153312–4	1	
	OVERLAY, ITALIAN	2	2153312–5	1	
	OVERLAY, PORTUGUESE	2	2153312–6	1	
	OVERLAY, SWEDISH	2	2153312–7	1	
	OVERLAY, DANISH	2	2153312–8	1	
	OVERLAY, TURKISH	2	2153312–9	1	
	OVERLAY, RUSSIAN	2	2153312–10	1	
	OVERLAY, GREEK	2	2153312–11	1	

BACKPLANE

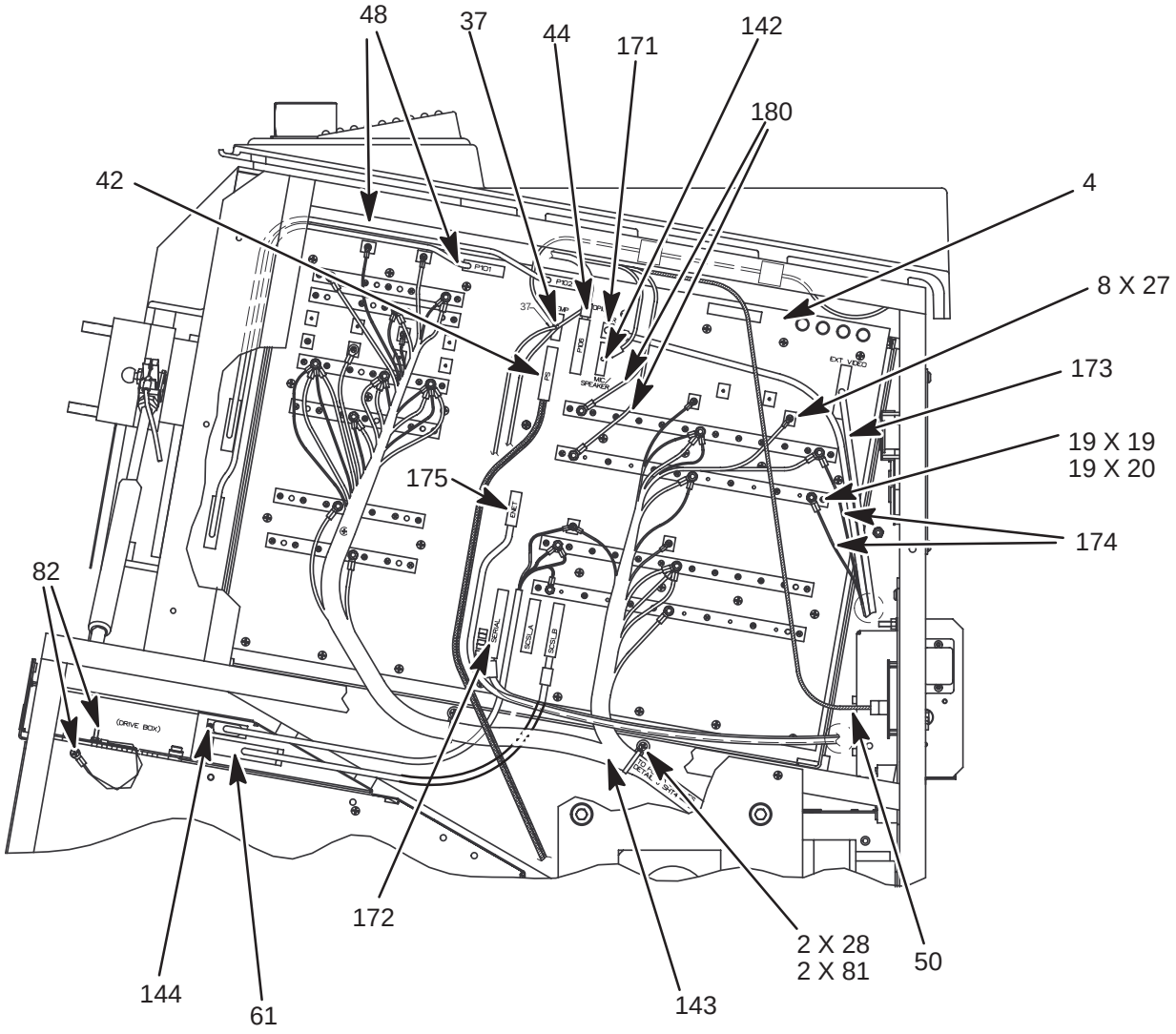

BACKPLANE
ILLUSTRATION 9–8

BACKPLANE

TABLE 9–8
BACKPLANE

ITEM	NAME	FRU	PART NUMBER	QTY	DESCRIPTION
4	BACKPLANE	2	2222028	1	Installed on units have a HV filter prior to 01/00
			2250654		Installed on units that don't have a HV Filter after 01/00
19	METRIC HEX NUT W/ LCK WSHER	KIT 5		19	M6 X 1
20	PLAIN WASHER	KIT 5		19	6.4 mm X 12 mm
25	WASHER	KIT 1		4	5.3 X 15 X 1.6
27	FREEDRIVE PAN HEAD SCREW	KIT 5		7	M3 X 0.5 X 6 mm
28	FREEDRIVE PAN HEAD SCREW	KIT 5		1	M5 X 0.8 X 8 mm
37	TEMP SENSOR CABLE	1	2183995	1	
42	POWER SUPPLY CABLE	1	2183996	1	
44	OP I/O CONTROL CABLE	1	2215858	1	
48	XDIF POWER/CNTL CABLE	1	2118170	2	
50	POWER SWITCH EXT. CABLE	1	46–326265G1	1	
61	SCSI CABLE	1	2227968	1	
142	SPEAKER/MIC CABLE	1	2183994	1	
143	POWER HARNESS CABLE	1	2215072	1	For 2222028 Backplane
			2252009		For 2250654 Backplane
144	DRIVE POWER CABLE	2	2216508	1	
171	VCR AUDIO CABLE	1	2235191	1	
172	SERIAL/EXPOSE/FOOTSWITCH CABLE	1	2184003	1	
173	VIDEO CABLE	1	2211313	1	
174	BULKHEAD POWER CABLE	1	2226777	1	
175	ETHERNET CABLE	1	2235197	1	
180	OP PANEL POWER CABLE	1	46–326159G1	1	

CARD CAGE

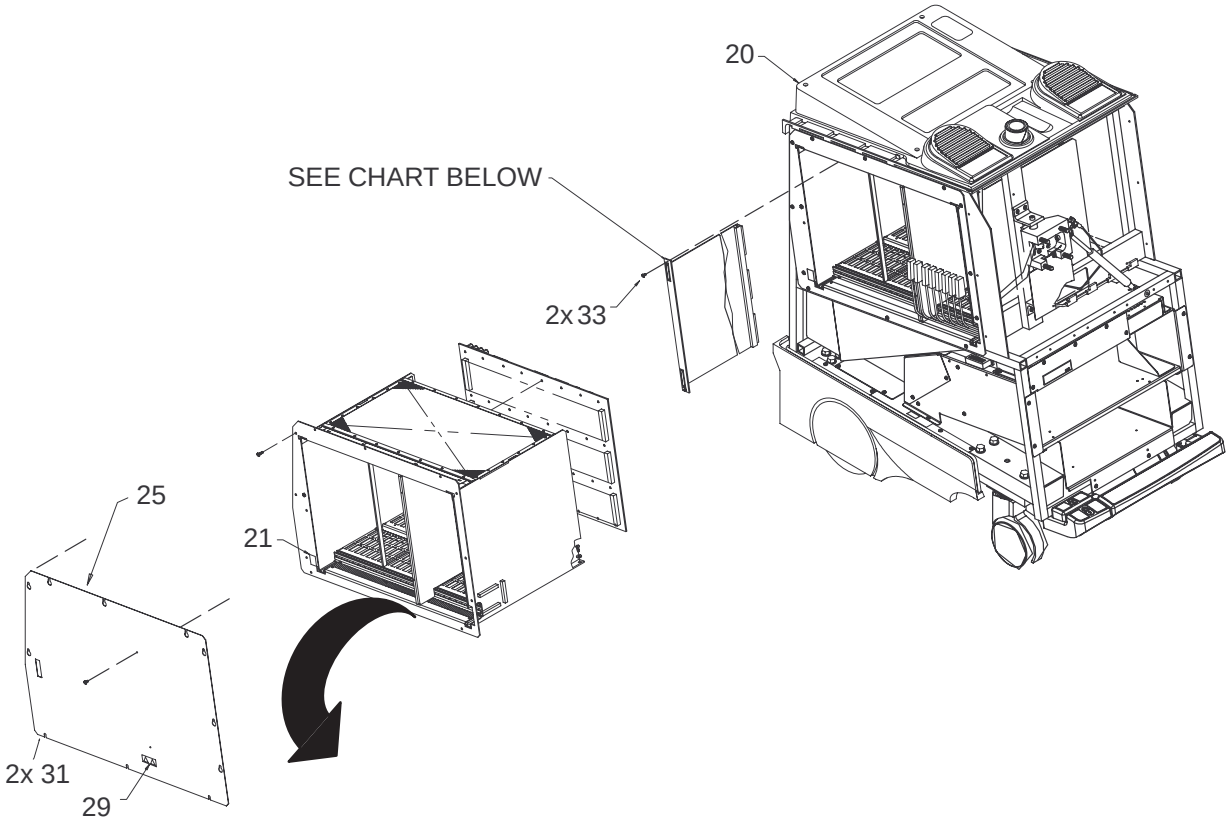

FIRST THREADED HOLE	A1 VP	A2 XY	A3 CINE	A4 TLM	A5 CALM	A6 ALM	A7 SP	A8 DP	A9 CFP	10 BMP	A11 SS	A12 HOST_PIA	A13
34	1	2	3	4	5	6	35	8	9	10	11	12&13	

THREADED HOLE BETWEEN A13 AND A14	A14 EQ	A15 FECT	A16 TD07	A17 TD06	A18 TD05	A19 TD04	A20 TD03	A21 TD02	A22 TD01	A23 TD00	LAST THREADED HOLE
36	14	15	16	16	16	16	16	16	16	16	34

CARD CAGE AND CIRCUIT CARDS
ILLUSTRATION 9–9

CARD CAGE

TABLE 9–9
CARD CAGE AND CIRCUIT CARDS

ITEM	NAME	FRU	PART NUMBER	QTY	DESCRIPTION
1	VIDEO PROCESSOR BOARD	1	2129508–4 or 2129508–3 or 46–288714G5 or 46–288714G4	1	VP3 or VP2
2	XY MEMORY BOARD	1	2154803 or 2117641 or 46–288728G1	1	XY5 or XY4 or XY3 –BT99
			2154803–2 or 2117641–2 or 46–288728G2		BT00
3	CINE MEMORY BOARD	1	46–288606G3 or 2120499–4	1	BT99
			46–288606G4 or 2120499–5		BT00
4	TIMELINE MEMORY BOARD	1	2242034 or 2222799 or 2155157 or 46–288732–G1 2251457	1	TLM4 or TLM3 TLM4_2 TLM4_3
5	COLOR ACOUSTIC LINE MEMORY BOARD	1	46–288616G3 or 46–288616G2 or 2237838 or 2245720	1	CALM W/FIFO VIDEO SHIFTER
			2208623		CALM2 –BT00
6	ACOUSTIC LINE MEMORY BOARD	1	46–288622G2 or 46–288622G1 or 2239631	1	ALM
8	DOPPLER BOARD	1	2128879 or 46–288716G1	1	DP3 or DP2
9	COLOR FLOW PROCESSOR	1	2219653–2	1	CFP3
10	B&M MODE BOARD	1	2129404	0	BMP3
10	SCAN SEQUENCER BOARD	1	2155787	1	SS2
12	MC/PIA BOARD	1	2127536	1	MC/PIA (Host/Pia adapter board only)
13	HOST CPU BOARD	1	2229393	1	Power PC CPU
14	EQUALIZATION BOARD	1	2218099–2	1	EQ
15	FRONT END CONTROL/TIMING BOARD	1	2121942	1	FECT
16	TIME DELAY BOARD, 16 CHANNEL	1	2218096–4 or 2237439–4	8	TD3
34	SLOT FILLER PANEL	2	2183848–7	2	
35	SLOT FILLER PANEL	2	2183848–6	2	
	FUSE F1	1	46–267217P16	1	SCSI termination

COOLING

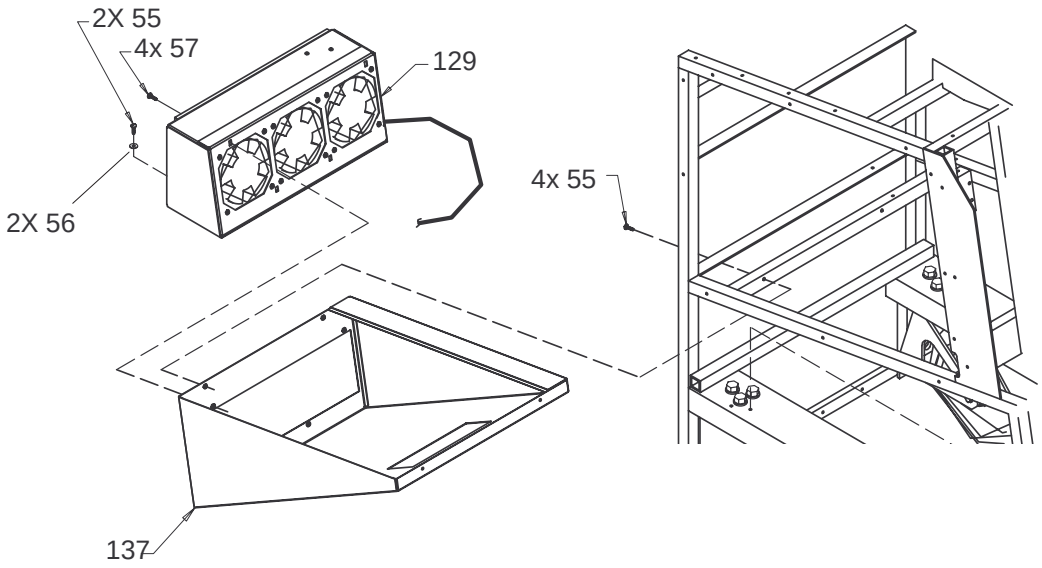

MUFFIN FAN ASSEMBLY
ILLUSTRATION 9–10

TABLE 9–10
MUFFIN FAN ASSEMBLY

ITEM	NAME	FRU	PART NUMBER	QTY	DESCRIPTION
55	FREEDRIVE PAN HEAD SCREW	KIT 6		6	M5x0.8x8mm
56	FLAT WASHER	KIT 6		2	5.3x15x1.6mm
57	FREEDRIVE PAN HEAD SCREW	KIT 6		4	M5x0.8x16mm
129	FAN BOX ASSEMBLY	1	2216015	1	See Illustration 9–11 for breakdown.
137	PLENUM	2	2223903	1	

COOLING

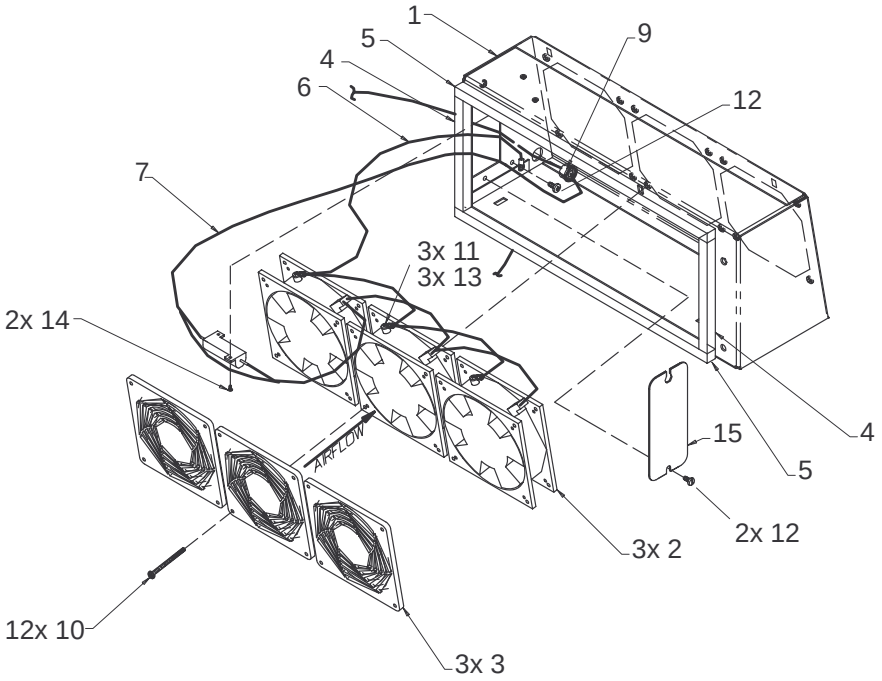

MUFFIN FAN ASSEMBLY BREAKDOWN
ILLUSTRATION 9–11

TABLE 9–11
MUFFIN FAN ASSEMBLY BREAKDOWN

ITEM	NAME	FRU	PART NUMBER	QTY	DESCRIPTION
1	FAN BOX	1		REF	See Illustration 9–10 for fan box assembly
2	DC TUBEAXIAL FAN	1	2183713	3	127 mm (5 in.)
3	FAN GUARD	N		3	
4	FOAM SEAL	N		2	
5	FOAM SEAL	N		2	
6	FAN GROUND CABLE ASM	N		1	
7	FAN POWER CABLE ASM	N		1	
9	GROMMET	N		1	For temperature sensor cable.
10	FREEDRIVE PAN HEAD SCREW	N		12	M4x0.7x50mm
11	PAN HEAD TAPPING SCREW	N		3	4.2x9.5mm
12	FREEDRIVE PAN HEAD SCREW	N		3	M5x0.8x8mm
13	EXT. TOOTH LOCK WASHER	N		3	4.3x8mm
14	FREEDRIVE PAN HEAD SCREW	N		2	M3x0.5x6mm
15	FAN BOX ACCESS COVER	N		1	

REAR BUMPER, POWER SUPPLIES, AND BULKHEAD

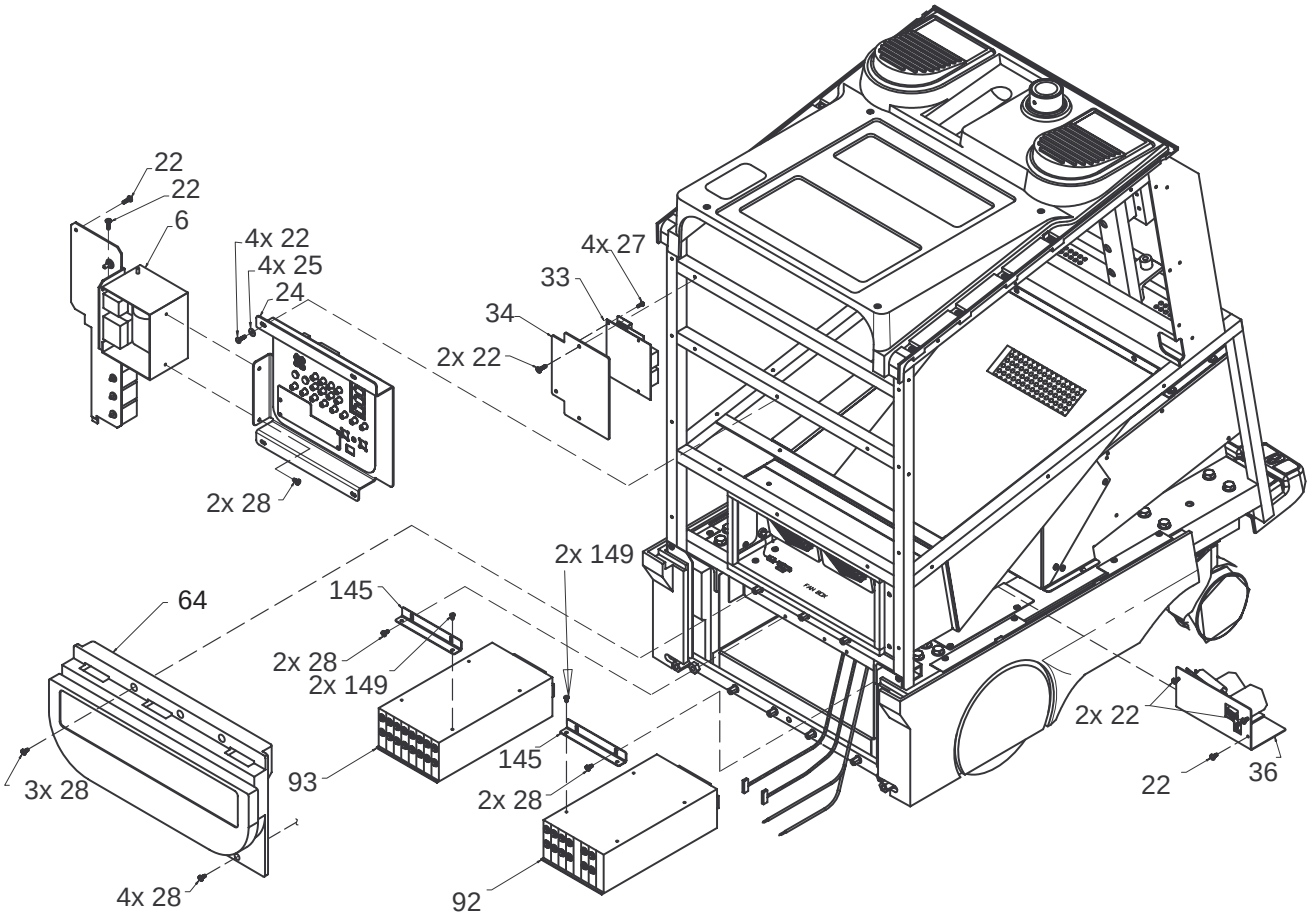

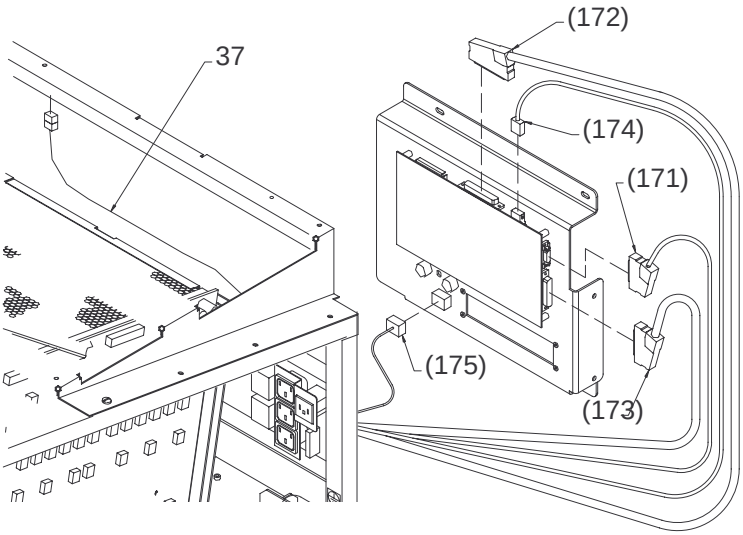

REAR BUMPER, POWER SUPPLIES, AND BULKHEAD
ILLUSTRATION 9–12

REAR BUMPER, POWER SUPPLIES, AND BULKHEAD

TABLE 9–12
REAR BUMPER, POWER SUPPLIES, AND BULKHEAD

ITEM	NAME	FRU	PART NUMBER	QTY	DESCRIPTION
6	AC DIST. ASSEMBLY	1	2184670–2	1	See illustration 9–20 for breakdown
22	FREEDRIVE PAN HEAD SCREW	KIT 1		11	M5x0.8x16mm
24	BULKHEAD ASSEMBLY	1	2226203	REF	See page 9–32 for breakdown.
25	FLAT WASHER	KIT 1		13	5.3x15x1.6mm
27	FREEDRIVE PAN HEAD SCREW	KIT 4		4	M3 X 0.5 X 6 mm
28	FREEDRIVE PAN HEAD SCREW	KIT 1		13	M5x0.8x8mm
33	OUTLET STRIP BOARD	1	2189052	1	
34	BACKING PLATE	2	2189052	1	
36	HV CAP ASSEMBLY	1	2182144	1	Installed on units built prior to Jan 2000
			2210721	1	Includes HV filter board
42	POWER SUPPLY CABLE	1	2183996	1	
64	REAR BUMPER	1	46–312860P2	1	
92	LN/HV POWER SUPPLY	1	2223127	1	See illustration 9–13 for breakdown
93	DIGITAL POWER SUPPLY		2223127–10	1	See illustration 9–13 for breakdown
145	POWER SUPPLY MOUNT	N	2210723	2	
149	FREEDRIVE PAN HEAD SCREW	KIT 7		4	M4 X 0.7 X 10 mm
171	VCR AUDIO CABLE	1	2235191	1	
172	FOOTSWITCH SERIAL EXPOSE CABLE	1	2184003	1	
173	VIDEO CABLE	1	2211313	1	
174	BULKHEAD POWER CABLE	1	2227240	1	
175	RJ45 CABLE TO BULKHEAD	1	2235197	1	

POWER SUPPLY ASSEMBLIES

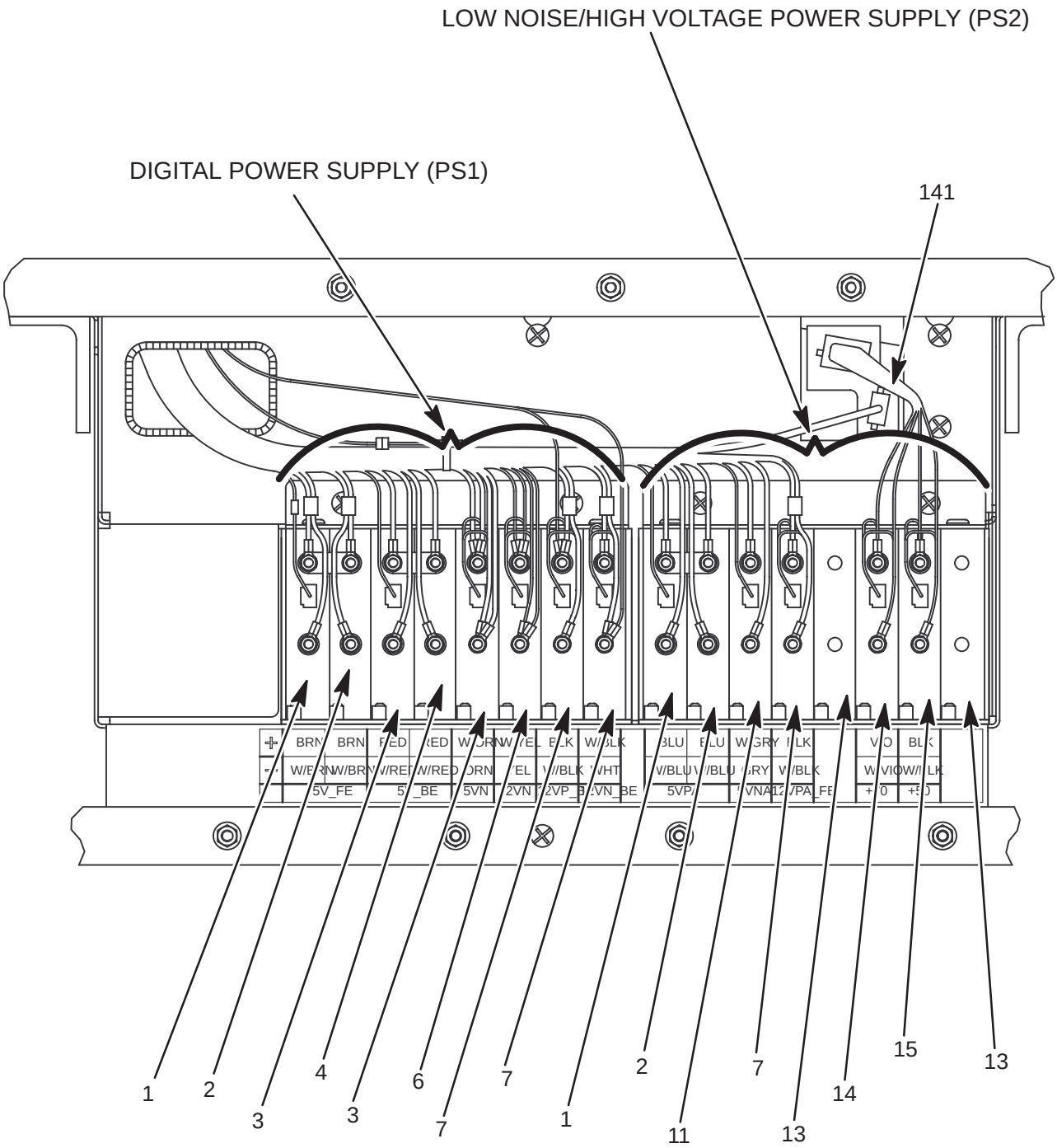

POWER SUPPLY ASSEMBLIES
ILLUSTRATION 9–13

POWER SUPPLY ASSEMBLIES

TABLE 9–13
POWER SUPPLY ASSEMBLIES

ITEM	NAME	FRU	PART NUMBER	QTY	DESCRIPTION
1	5V Module	1	2223127–3	2	5VFE and 5VPA
2	5V Module	1	2223127–4	2	boost for 5V_FE and 5VPA
3	5V Module	1	2223127–12	2	5VBE
4	5V Module	1	2223127–13	1	boost for 5VBE and –5V for 5VN
6	2V Module	1	2223127–14	1	2VN
7	12V Module	1	2223127–6	3	12VP_BE, boost for 12VP_BE, and 12N_FE
11	5V Module	1	2223127–5	1	5VNA
13	AIRBLOCK	1	2223127–7	2	
14	+70V Module	1	2223127–8	1	HV_A
15	+50V Module	1	2223127–9	1	HV_A
141	Power Supply Cable	1	2223414	1	filter board to pwr supply cable , not used on units with 2250654 Back-planes

BULKHEAD ASSEMBLY

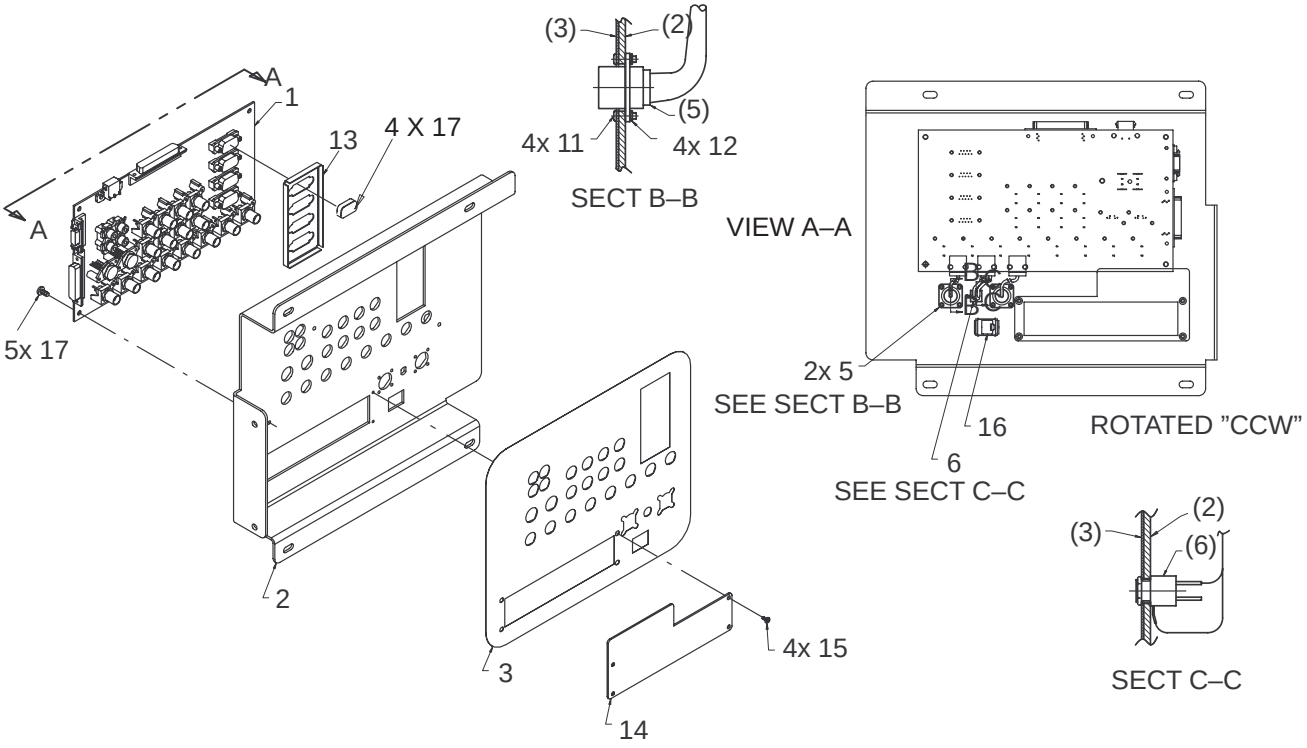

BULKHEAD ASSEMBLY BREAKDOWN

ILLUSTRATION 9–14

BULKHEAD ASSEMBLY

TABLE 9–14
BULKHEAD ASSEMBLY BREAKDOWN

ITEM	NAME	FRU	PART NUMBER	QTY	DESCRIPTION
1	BULKHEAD BOARD	1	2189808	1	
2	BULKHEAD BRACKET	2	2225497	1	
3	BULKHEAD LABEL	N		1	
5	PRINT CONNECTOR CABLE	2	2226981	2	
6	FOOTSWITCH/EXPOSE CABLE	2	2226980	1	
11	FREEDRIVE PAN HEAD SCREW	KIT 4		8	M2 X 0.4 X 12 mm
12	METRIC HEX NUT	KIT 4		8	M2 X 0.4
13	BULKHEAD CONNECTOR SHIELD	N		1	
14	ECG/SCSI COVER PLATE	2	2180809	1	
15	FREEDRIVE PAN HEAD SCREW	KIT 5		4	M3 X 0.5 X 6 mm
16	RJ45 FEEDTHRU CONNECTOR	2	2228295–2	1	
17	FREEDRIVE PAN HEAD SCREW	KIT 7		5	M4 X 0.7 X 8mm
24	BULKHEAD ASSEMBLY	REF	2226203	1	See illustration for breakdown

PERIPHERAL BULKHEAD ASSEMBLY (ON BT99 Units only) OR PERIPHERAL CABLES (BT00 UNITS)

NOTE
ITEMS 19, 20, and 21 not illustrated.
BT00 peripheral cables.

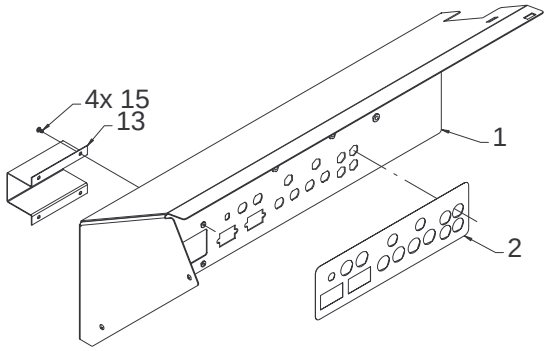

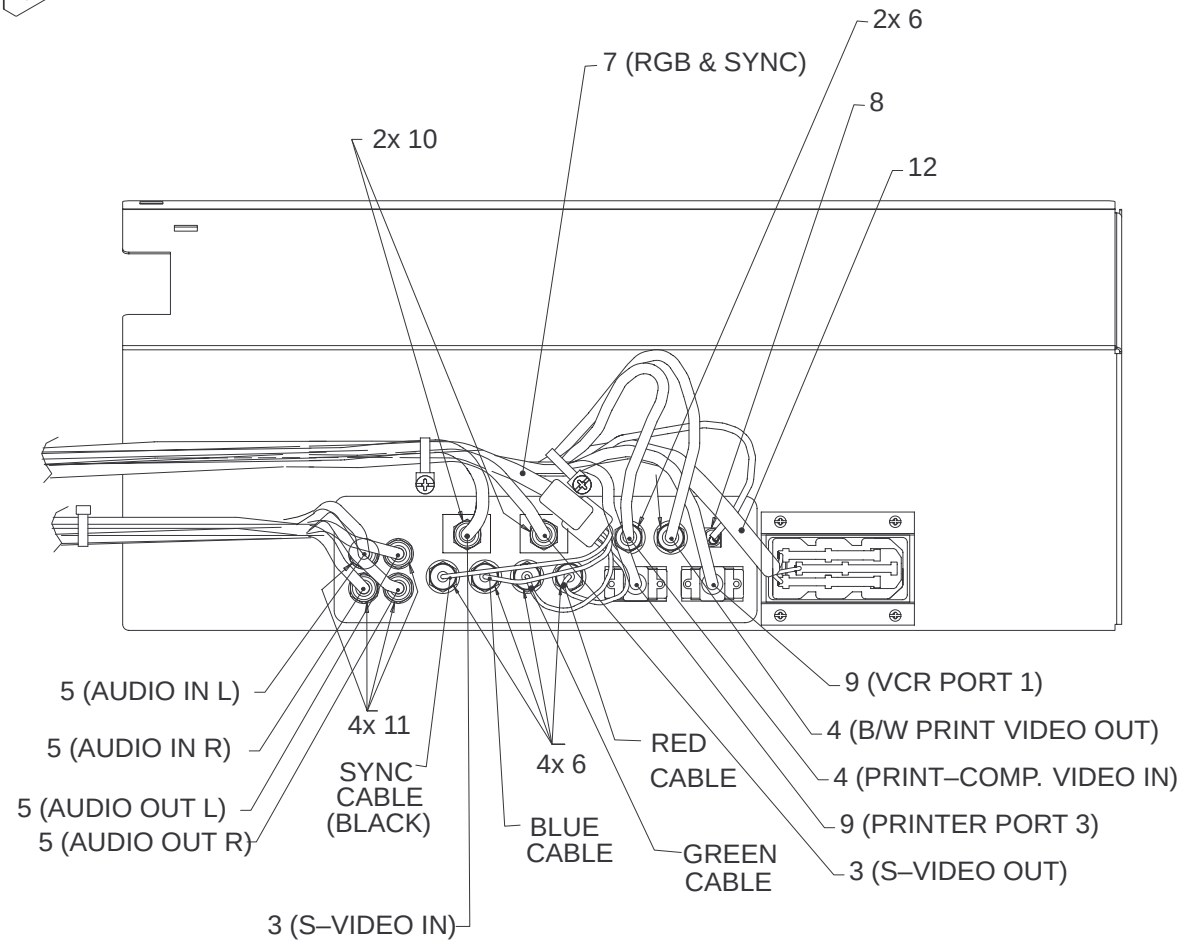

PERIPHERAL BULKHEAD ASSEMBLY BREAKDOWN
ILLUSTRATION 9–15

PERIPHERAL BULKHEAD ASSEMBLY

TABLE 9–15
PERIPHERAL BULKHEAD ASSEMBLY (BT99) or PERIPHERAL CABLES (BT00) BREAKDOWN

ITEM	NAME	FRU	PART NUMBER	QTY	DESCRIPTION
1	PERIPH BULKHEAD BRKT	2	2226205	1	BT99 Units
			2257818		BT00 Units
2	PERIPH BULKHEAD LABEL	2	2226206	1	BT99 Units
3	VIDEO CABLE	1	2117637–2	2	BT99 Units
4	75 OHM VIDEO CABLE	1	2150736–5	2	BT99 Units
5	AUDIO CABLE	1	2117637–6	4	BT99 Units
6	BNC BREAKTHRU NON–INSUL	1	46–328025P1	6	BT99 Units
7	RGB/SYNC VIDEO CABLES	1	2117637	1	BT99 Units
8	EXPOSE CABLE	1	2184004	1	BT99 Units
9	9 PIN D–SUB CABLE	1	2227245	2	BT99 Units
10	S–VIDEO FEED THRU	1	2227244	2	BT99 Units
11	RCA FEED THRU	1	2227243	4	BT99 Units
12	IEC–320 EXT OUTLET	1	2227251	1	BT99 Units
13	SHIELD BRACKET	1	2227252	1	BT99 Units
14	FREEDRIVE PAN HEAD SCREW	KIT 2		4	M5 X 0.8 X 8 mm
15	FREEDRIVE PAN HEAD SCREW	KIT 2		4	M3 X 0.5 X 6 mm
16	CABLE TIE	1	46–208759P1	4	7.81” X .184”
17	FLAT WASHER	2	46–311804P1	4	3.2 X 7 X .5
18	HEAT SHRINK	2	46–136323P36	AR	
19	PRINTER CABLE	1	2266554	1	BT00 Units
20	VCR CABLE	1	2266556	1	BT00 Units
21	3 WAY POWER CABLE	1	2267909	1	BT00 Units

HARD DRIVE AND MOD

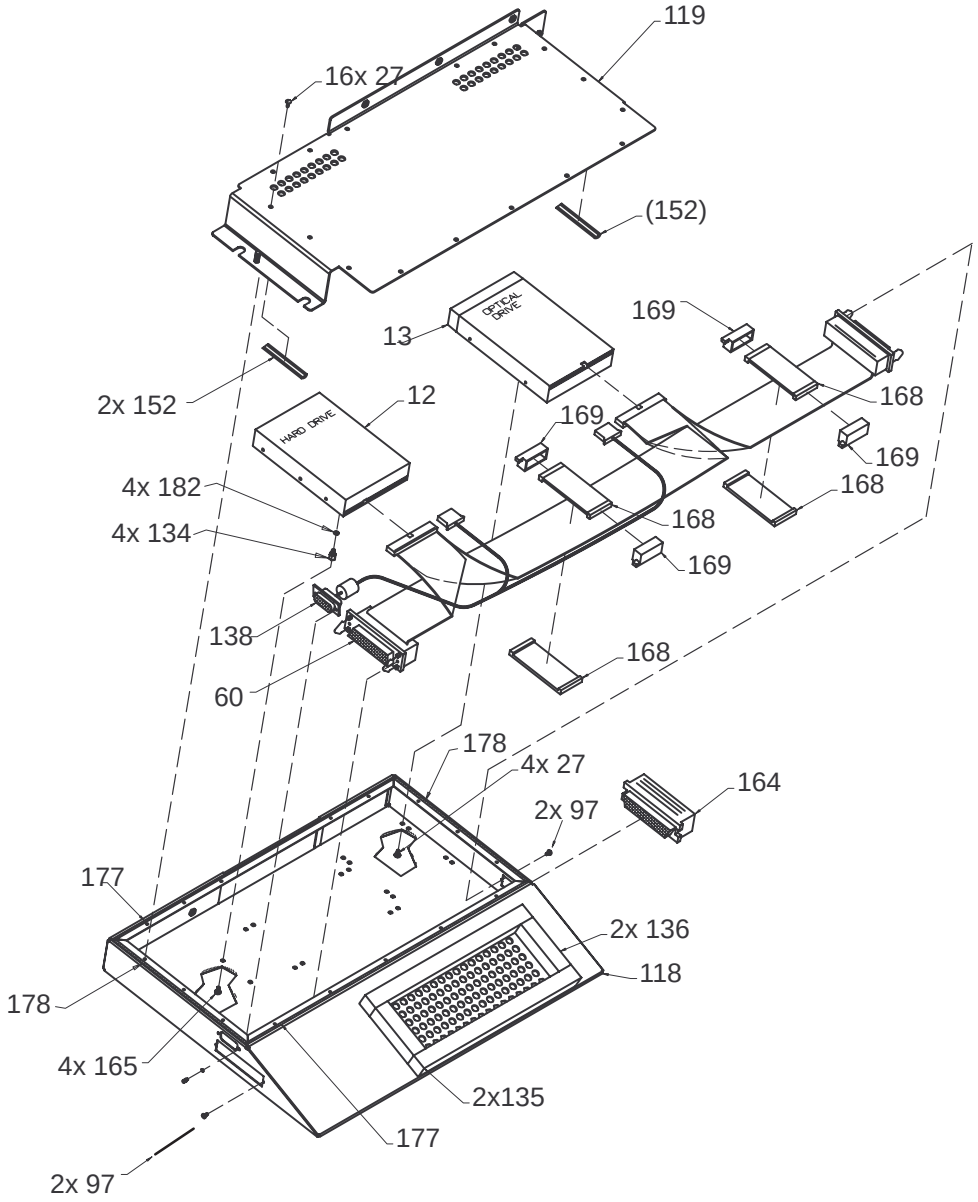

HARD DRIVE AND MOD
ILLUSTRATION 9–16

HARD DRIVE AND MOD

TABLE 9–16
HARD DRIVE AND MOD

ITEM	NAME	FRU	PART NUMBER	QTY	DESCRIPTION
12	HARD DRIVE	1	46–330318P5	1	4 Gigabyte
13	MAGNETO OPTICAL DRIVE	1	46–330319P4	1	Fujitsu M2513A MOD
27	FREEDRIVE PAN HEAD SCREW	KIT 1		20	M3 X 0.5 X 6 mm
60	SCSI DRIVE CABLE	1	2183997	1	
97	SCREW			4	With integral lock washer
118	DRIVE BOX	2	2218256	1	
119	DRIVE BOX UPPER COVER	2	2218257	1	
134	HEX SPACER	N	46–208984P3	4	
135	FOAM SEAL	2	2190460–4	2	
136	FOAM SEAL	2	2190460–5	2	
138	DRIVE POWER CABLE	1	2216434	1	
152	SHIELDING GASKET	N	2135950–3	2	
164	SCSI TERMINATOR	2	2109246	1	
165	SCREW	2	46–208560P17	4	F70B5A
168	FERRITE CORE	2	2205497	4	
169	CLIP, CORE	2	2205498	4	
177	GASKET	N	46–330051P31	2	
178	GASKET	N	46–330051P32	2	
182	LOCK WASHER	KIT 3		4	M3
	MOD DISK	1	E8381AA	1	Blank media, 128 Megabyte
			E8381AB		Blank media, 230 Megabyte

TEMPERATURE SENSORS

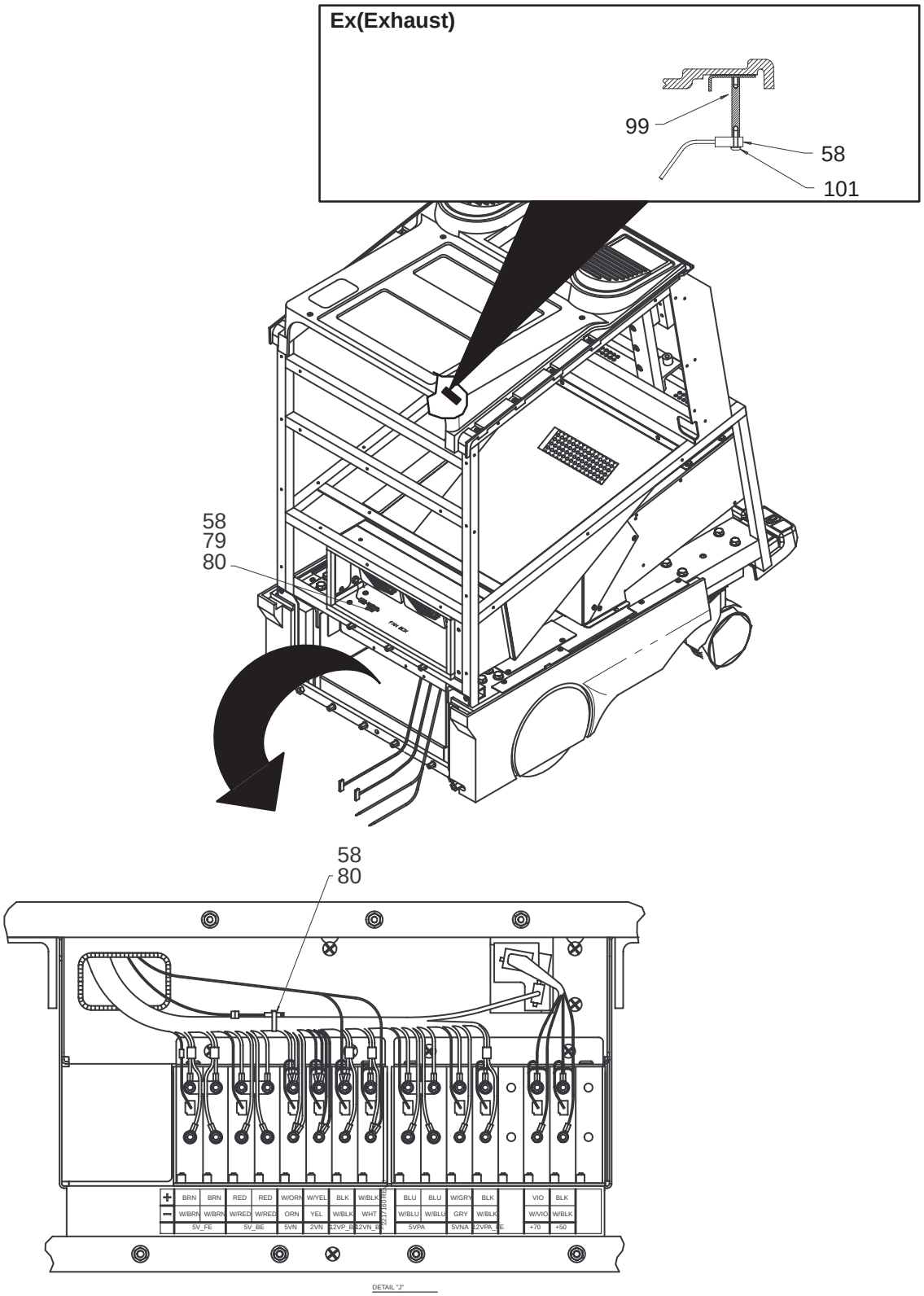

TEMPERATURE SENSORS
ILLUSTRATION 9–17

TEMPERATURE SENSORS

TABLE 9–17
TEMPERATURE SENSORS

ITEM	NAME	FRU	PART NUMBER	QTY	DESCRIPTION
58	TEMPERATURE PROBE	1	2114553	3	
79	CABLE TIE	2	46–208747P1	2	Adhesive backed
80	SELF LOCKING CABLE TIE	2	46–208758P2	2	5.5x0.140in.
99	NYLON HEX STANDOFF	KIT 1		1	
101	FREEDRIVE PAN HEAD SCREW	KIT 1		1	M3x0.5x10mm

AC POWER

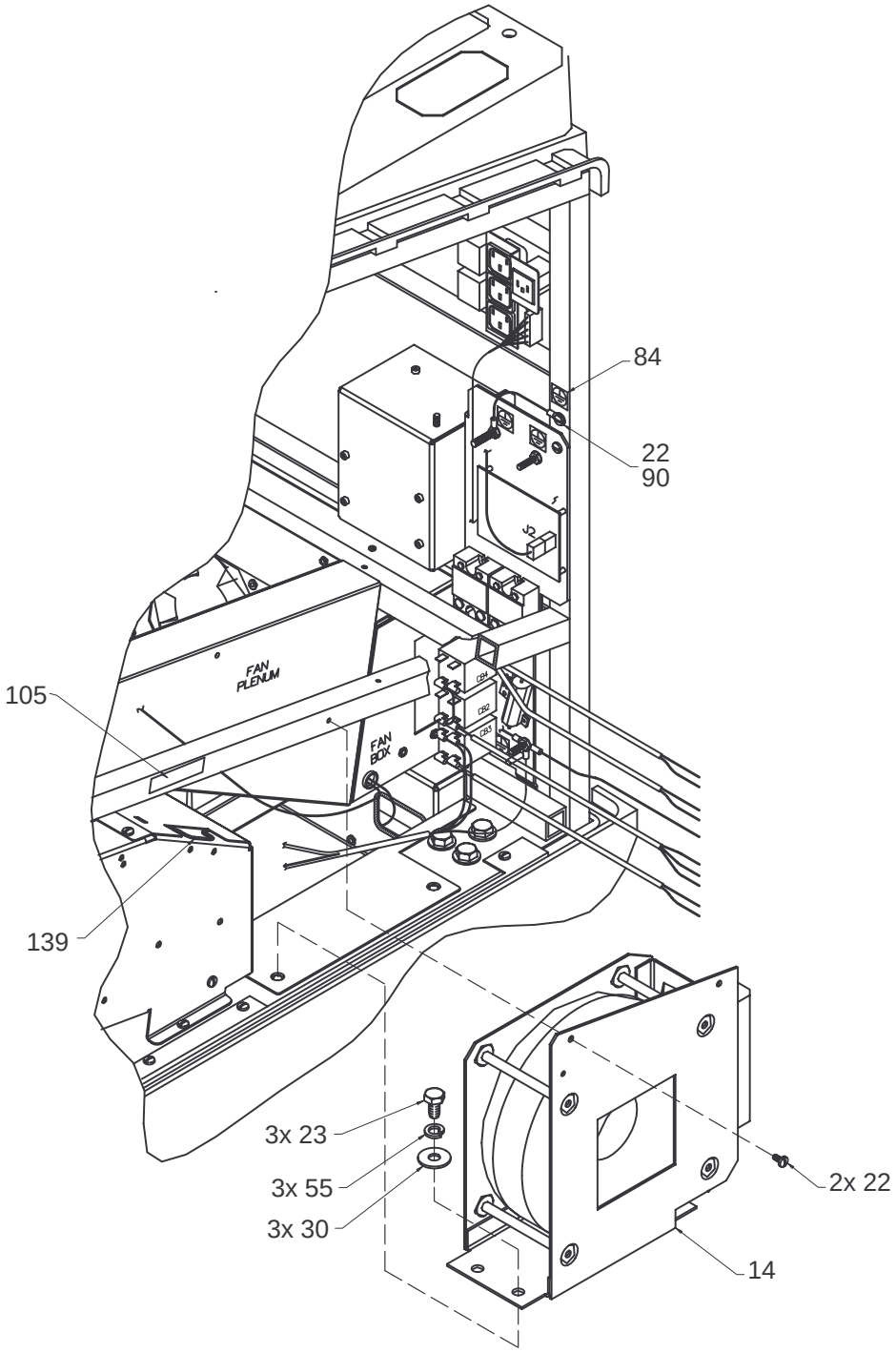

ISOLATION TRANSFORMER AND HIGH VOLTAGE CAPACITOR ASSEMBLY
ILLUSTRATION 9–18

AC POWER

TABLE 9–18
ISOLATION TRANSFORMER AND HIGH VOLTAGE CAPACITOR ASSEMBLY

ITEM	NAME	FRU	PART NUMBER	QTY	DESCRIPTION
14	ISOLATION TRANSFORMER	1	46–312080P1	1	
22	FREEDRIVE PAN HEAD SCREW	KIT 1		2	M5x0.8x16mm
23	HEX HEAD CAP SCREW	KIT 1		3	M10x1.5x25mm
25	FLAT WASHER	KIT 1		3	5.3x15x1.6mm
28	FREEDRIVE PAN HEAD SCREW	KIT 1		3	M5x0.8x8mm
30	PLAIN WASHER	KIT 1		3	M10
55	HELICAL LOCK WASHER	KIT 1		3	
82	HEX NUT	KIT 1		3	M5x0.8 with integral lock washer
84	PROTECTIVE GROUND LABEL	1	46–271110P1	1	
105	SHOCK HAZARD LABEL	2	2114749	1	

AC POWER

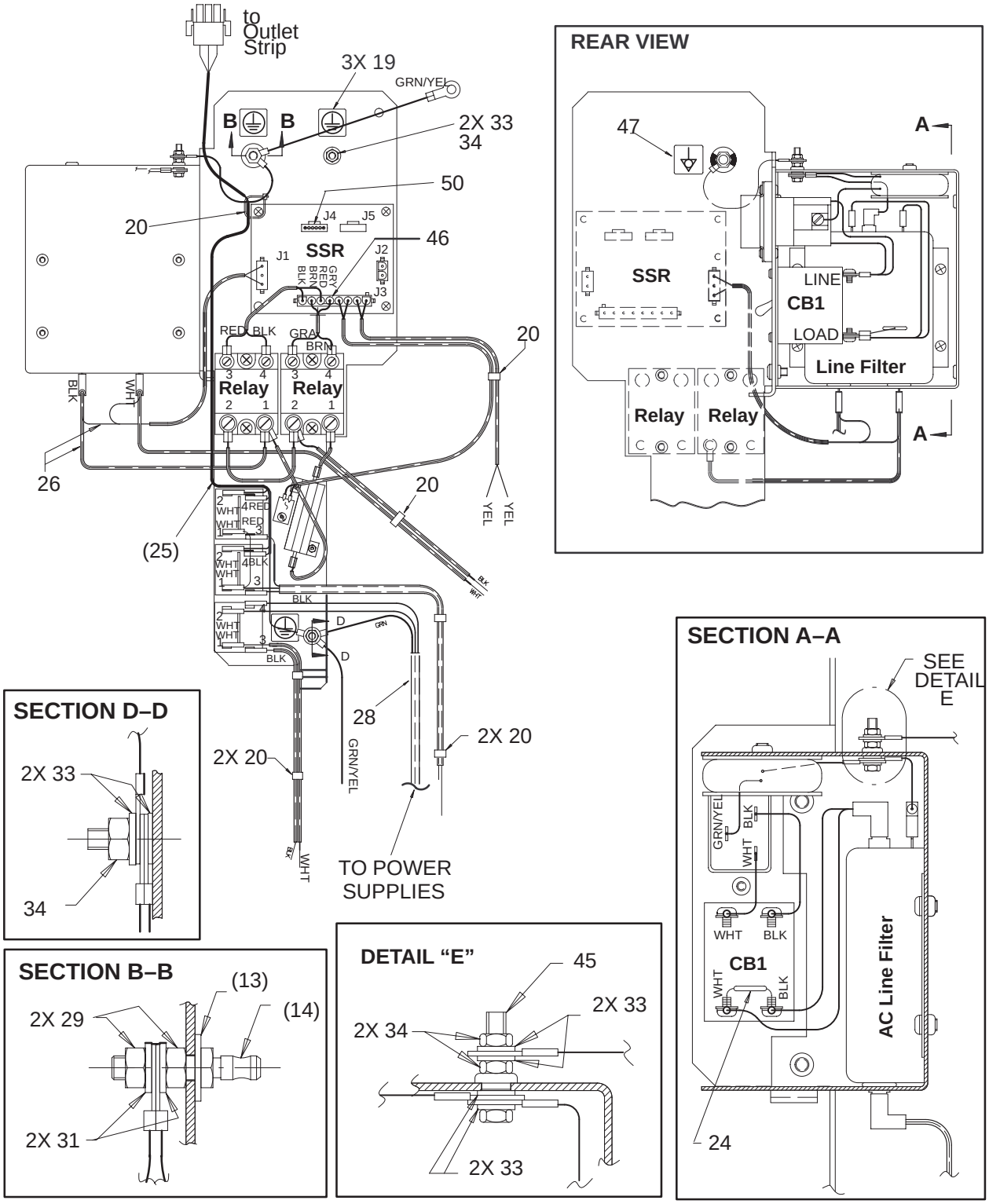

AC WIRING
ILLUSTRATION 9–19

AC POWER

TABLE 9–19
AC WIRING

ITEM	NAME	FRU	PART NUMBER	QTY	DESCRIPTION
13	COLOR CODED WASHER	KIT 2		1	
14	GROUND STUD	KIT 2		1	
19	LABEL	2	46–271110P1	3	
20	STRAP	N		7	Cable tie, 3.62 x 0.094 in.
24	MOV	1	46–330019G1	1	For 100–120 Vac units
			46–330019G2		For 200–240 Vac units
25	OUTLET STRIP CABLE	2	2184764	1	
26	SSR J1 CABLE	2	2133930	1	
28	POWER SUPPLY INPUT CABLE	2	2224288	1	
29	METRIC HEX NUT	KIT 2		2	M6x1mm
31	FLAT WASHER	KIT 2		2	6.4x12.5x1.6mm
33	FLAT WASHER	KIT 2		10	5.3x10x1mm
34	HEX NUT	KIT 2		4	M5x0.8mm with integral lock washer
45	HEX HEAD CAP SCREW	KIT 2		1	M5x0.8x20mm
46	THERMAL FUSE & CABLE	2	2133926	1	To J3 on SSR and relays
47	LABEL	2	46–271110P5	1	IEC equipotentiality
50	SOFT START JUMPER	2	2134330	1	Selects 100–120 Vac or 200–240 Vac

AC POWER

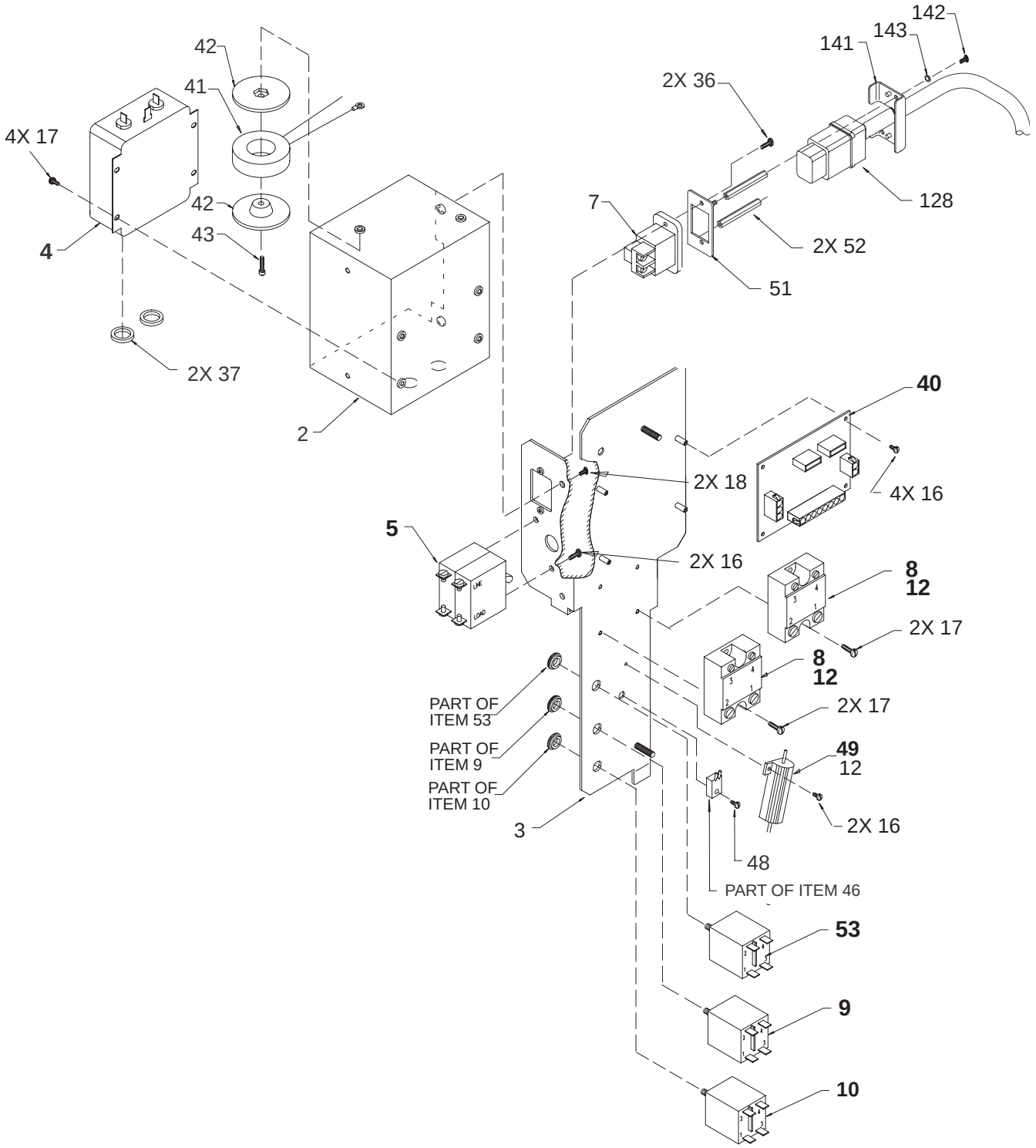

AC POWER DISTRIBUTION ASSEMBLY
ILLUSTRATION 9–20

AC POWER

TABLE 9–20
AC POWER DISTRIBUTION

ITEM	NAME	FRU	PART NUMBER	QTY	DESCRIPTION
2	BOX	2	46–326248P1	1	
3	AC DISTRIBUTION BRACKET	2	2185137	1	
4	AC LINE FILTER	1	46–312745P1	1	
5	MAIN CIRCUIT BREAKER	1	46–312701P1	1	120 Vac, 20 A (CB1)
			46–312701P2		200–240 Vac, 10 A (CB1)
7	POWER INLET	1	46–330301P1	1	
8	SOLID STATE RELAY	1	46–312671P2	2	40 A, non–zero switch type
9	PERIPHERAL CIRCUIT BREAKER	1	46–312715P1	1	110 Vac, 4 A (CB2)
			46–312715P3		230 Vac, 2 A (CB2)
10	PS1 CIRCUIT BREAKER	1	46–312715P2	1	9.5 A (CB3)
12	THERMAL COMPOUND	KIT 2		AR	Provides thermal path
16	FREEDRIVE PAN HEAD SCREW	KIT 2		8	M3x0.5x6mm
17	FREEDRIVE PAN HEAD SCREW	KIT 2		8	M4x0.7x8mm
18	FREEDRIVE PAN HEAD SCREW	KIT 2		2	M5x0.8x8mm
36	FREEDRIVE PAN HEAD SCREW	N		2	M3x0.5x16mm
37	LINE FILTER BOX GASKET	2	2101184	2	
40	SOLID STATE RELAY CIRCUIT BOARD	1	2128476	1	SSR
41	MAGNETICS	1	2102132	1	1W, 1A, 1V
42	MECHANICAL/M	2	2100764–2	2	Toroid retainer
45	HEX HEAD CAP SCREW	KIT 2		1	M5x0.8x20mm
46	THERMAL FUSE CABLE			REF	(See same item on page 9–42.)
48	FREEDRIVE PAN HEAD SCREW	KIT 2		1	M3x0.5x10mm
49	SOFT–START RESISTOR	2	46–221454P62	1	50 W, 2.5 ohm, 3%
51	POWER CORD MTG ADAPTER	N	2164584	1	
52	HEX SPACER	N	46–312541P3	2	
53	MONITOR CIRCUIT BREAKER	1	46–312715P5	1	Slower acting, required with G3 monitor. (CB4)
128	POWER CORD		2162856	1	
141	POWER CORD CLAMP PLATE		2164585	1	
142	FREEDRIVE PAN HEAD SCREW		46–312358P28	2	M3x0.5x8mm
143	HELICAL LOCK WASHER		46–311805P10	2	M3

RF SHIELDS AND GASKETS

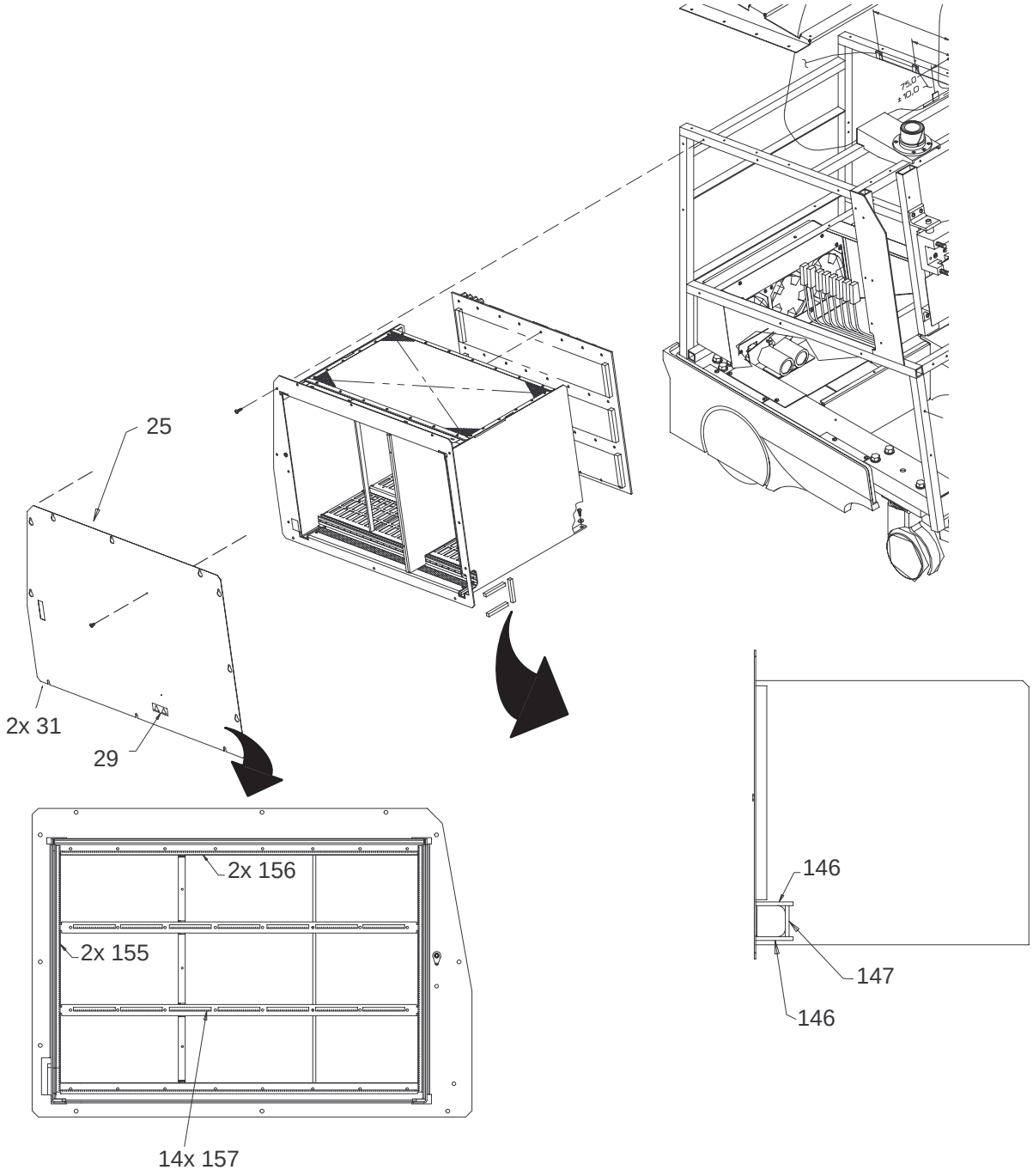

RF SHIELDS AND GASKETS
ILLUSTRATION 9–21

RF SHIELDS AND GASKETS

TABLE 9–21
RF SHIELDS AND GASKETS

ITEM	NAME	FRU	PART NUMBER	QTY	DESCRIPTION
25	CARD RACK SHIELD ASSEMBLY	N	22214662	1	
29	SHOCK HAZARD LABEL	2	2114749	1	
31	SCREW, PAN HEAD	KIT 8		2	M3 X 0.5 X 8 MM
146	RF SHIELDING GASKET	N		2	576 mm
147	RF SHIELDING GASKET	N		1	67.5 mm
155	RF SHIELDING GASKET	N		2	
156	RF SHIELDING GASKET	N		2	
157	RF SHIELDING GASKET	N		14	
183	RF SHIELDING GASKET	N		2	
184	RF SHIELDING GASKET	N		1	

FRAME

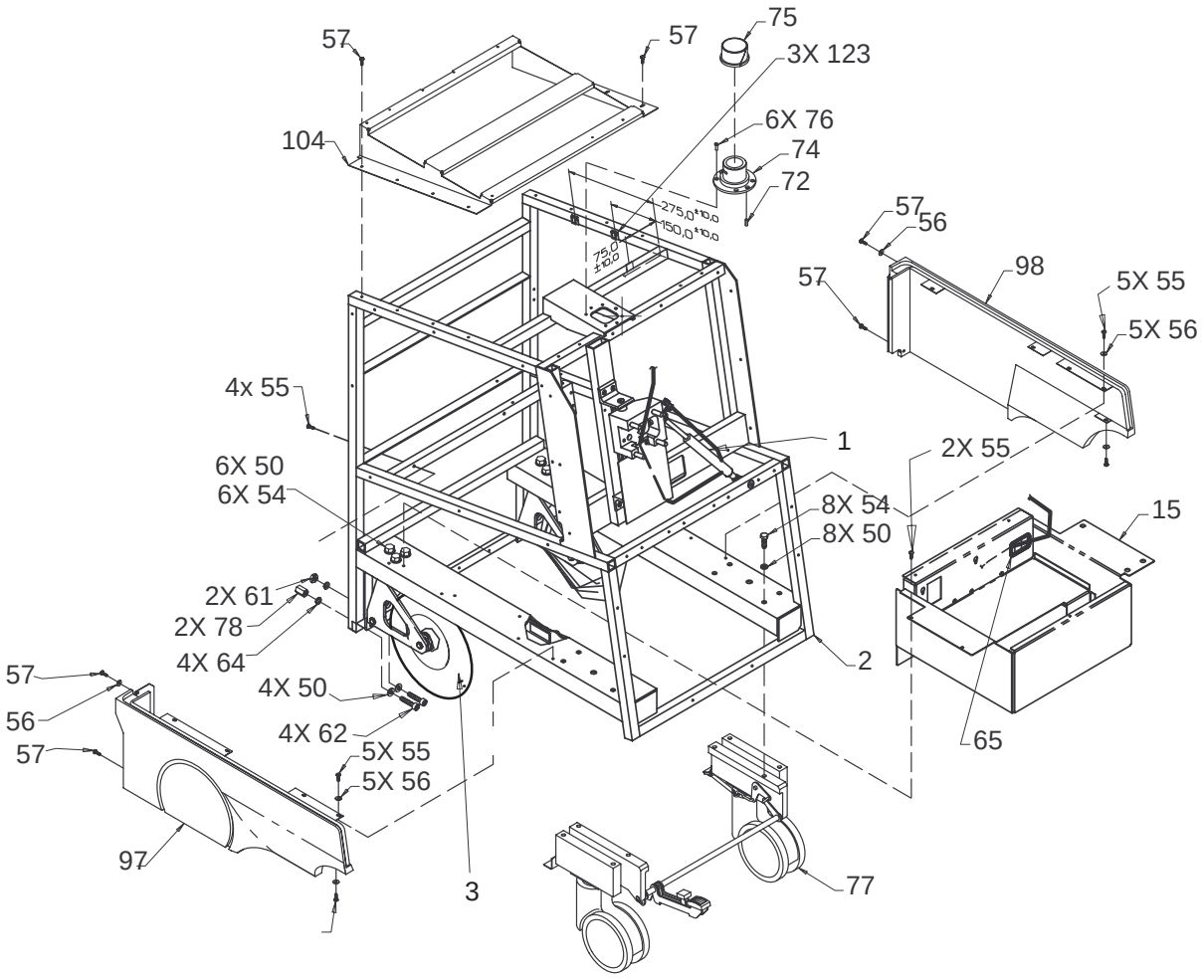

FRAME ASSEMBLY
ILLUSTRATION 9–22

FRAME

TABLE 9–22
FRAME ASSEMBLY

ITEM	NAME	FRU	PART NUMBER	QTY	DESCRIPTION
1	GAS SPRING ASSEMBLY	REF		1	See Illustration 9–25 for breakdown.
3	REAR WHEEL ASSEMBLY	1	2120474–6	2	Do not attempt disassembly.
15	TRAY, POWER SUPPLY MOUNTING	N		1	
28	FREEDRIVE PAN HEAD SCREW	KIT 1		5	M5x0.8x8mm
40	JACK (LIFT HERE) LABEL	2	2117596	4	
50	FLAT WASHER	KIT 6		18	M10
54	HEX HEAD CAP SCREW	KIT 6		14	M10x1.5x25mm
55	FREEDRIVE PAN HEAD SCREW	KIT 6		36	M5x0.5x8mm
56	FLAT WASHER	KIT 6		44	5.3x15x1mm
57	FREEDRIVE PAN HEAD SCREW	KIT 6		21	M5x0.5x16mm
61	METRIC HEX NUT	KIT 6		2	M10x1.5
62	HEX SOCKET HEAD SCREW	KIT 6		4	M10x1.5x40mm
64	HELICAL LOCK WASHER	KIT 6		4	M10
72	DOWEL PIN	N		1	Part of item 74
74	SWIVEL BASE	2	46–326087P1	1	Includes items 72 and 76
75	BUSHING, MONITOR SWIVEL	1	46–326121P1	1	
76	HEX SOCKET FLAT HEAD SCREW	KIT 6		6	M5x0.8x16mm
77	FRONT WHEEL AND BRAKE ASSEMBLY	1	2225838	1	Replaces original design. See Illustration 9–26 for breakdown.
78	HEX SPACER	KIT 6		2	Seismic anchor
97	LH BUMPER	1	46–312859P2	1	
98	RH BUMPER	1	46–312858P2	1	
104	TOP COVER SUPPORT	2	2102288	1	
123	CORD CLIP	2	46–220190P2	3	

FRAME

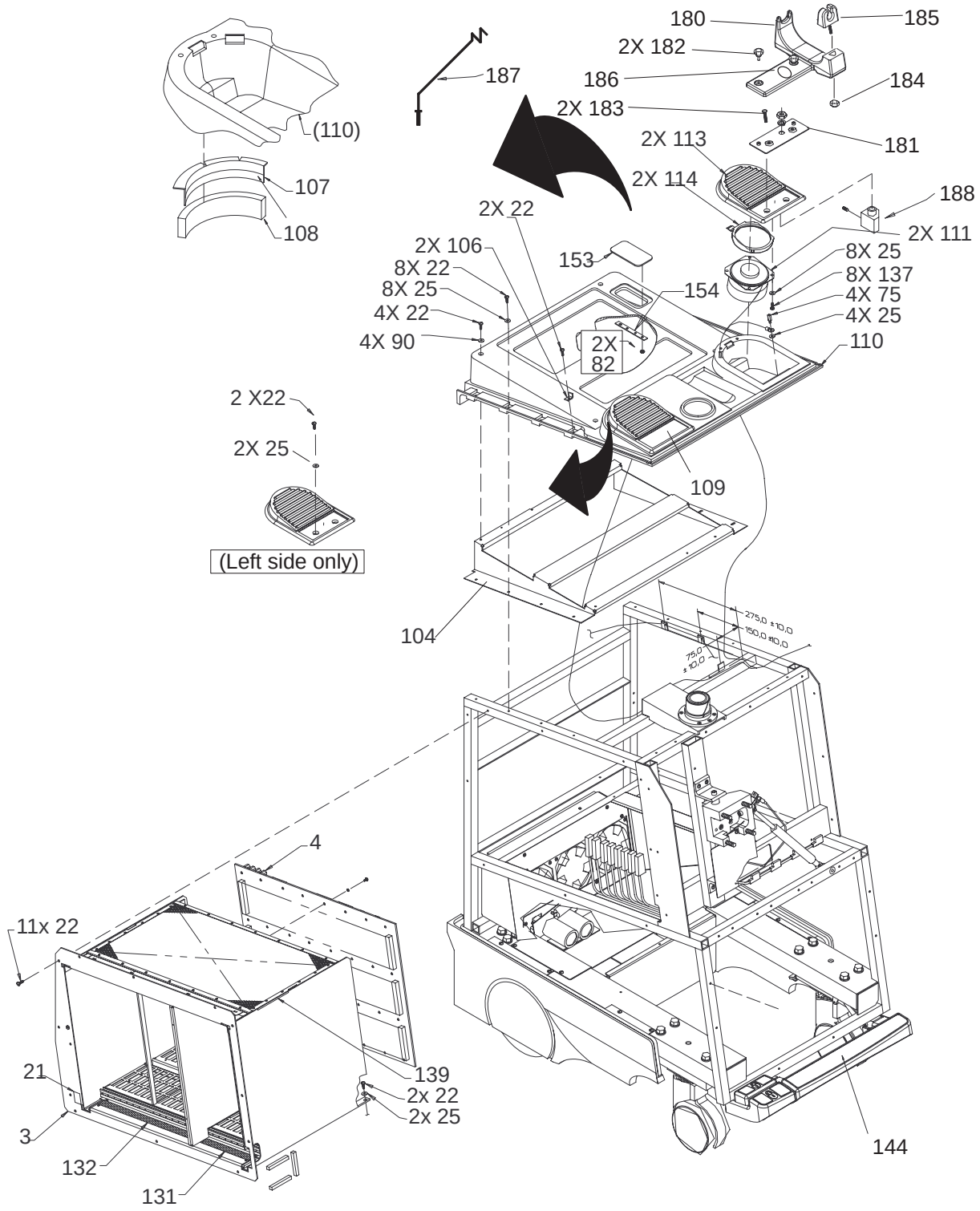

FRAME ASSEMBLY
ILLUSTRATION 9–23

FRAME

TABLE 9–23
FRAME ASSEMBLY

ITEM	NAME	FRU	PART NUMBER	QTY	DESCRIPTION
3	CARD RACK	N		1	
4	BACKPLANE	2	2222028 2250654	1	See illustration 9–8 for breakdown.
21	ANTI–STATIC LABEL	2	46–312787P1	1	
22	SCREW, PAN HEAD	KIT 1		51	M5 X 0.8 X 16mm
25	FLAT WASHER	KIT 1			5.3x15x1.6mm
75	HEX SPACER	KIT 6		4	
82	METRIC HEX NUT	KIT 6		2	M5x0.8mm
90	FLAT WASHER	KIT 6		4	5.3x10x1mm
91	SPEAKER	1	46–330075P1	2	
104	TOP COVER SUPPORT	2	2102288	1	
106	SIDE COVER CLIP	KIT 6		2	
107	SPEAKER SEAL MYLAR	2	2110757	2	
108	SPEAKER GASKET	2	2110758	2	
109	SPEAKER COVER TRIM	1	2183763	2	Used to install item 113.
110	TOP COVER	1	46–312851P1	1	
113	SPEAKER COVER (INJECTION MOLDED)	1	2195815	2	Requires items 109, 114, and 137 for installation.
114	SPEAKER CLAMP RING	2	2196363	2	Use only with item 113.
131	RH SPHINX CARD RACK LABEL	N		1	
132	LH SPHINX CARD RACK LABEL	N		1	
137	SCREW (FOR THERMOPLASTICS)	2	2198621–13	8	Use only with item 113.
139	GROMMET	N		AR	
144	COVER FOOTREST	2	2226201 or 2226201–2	2	See illustration 9–26 for breakdown.
154	FOUR–HOLE BRACKET	2	2100615	2	
153	CABLE ACCESS COVER	2	2103159	1	Includes items 82 and 154
180	PROBE HOLDER BASE	1	2250624	1	
181	MOUNTING PLATE	KIT Q	2239592	1	
182	KNOB	KIT Q	2240601	2	
183	SCREW	KIT Q	46–312358P54	2	M5 X 25
184	NUT	KIT Q	46–312346P3	1	M5 KEPS nut
185	PROBE STRAIN RELIEF	KIT Q	2250626	1	
186	PROBE HOLDER BASE PLUG	KIT Q	2261807	1	Used on probe holder base if a cable support hook isn't installed.
187	CABLE HOOK	KIT Q	2247273	1	
188	CABLE HOOK BASE HOLDER	KIT Q	2257256	1	
189	HOOK W/ BASE	KIT Q	2257272	1	

FRAME

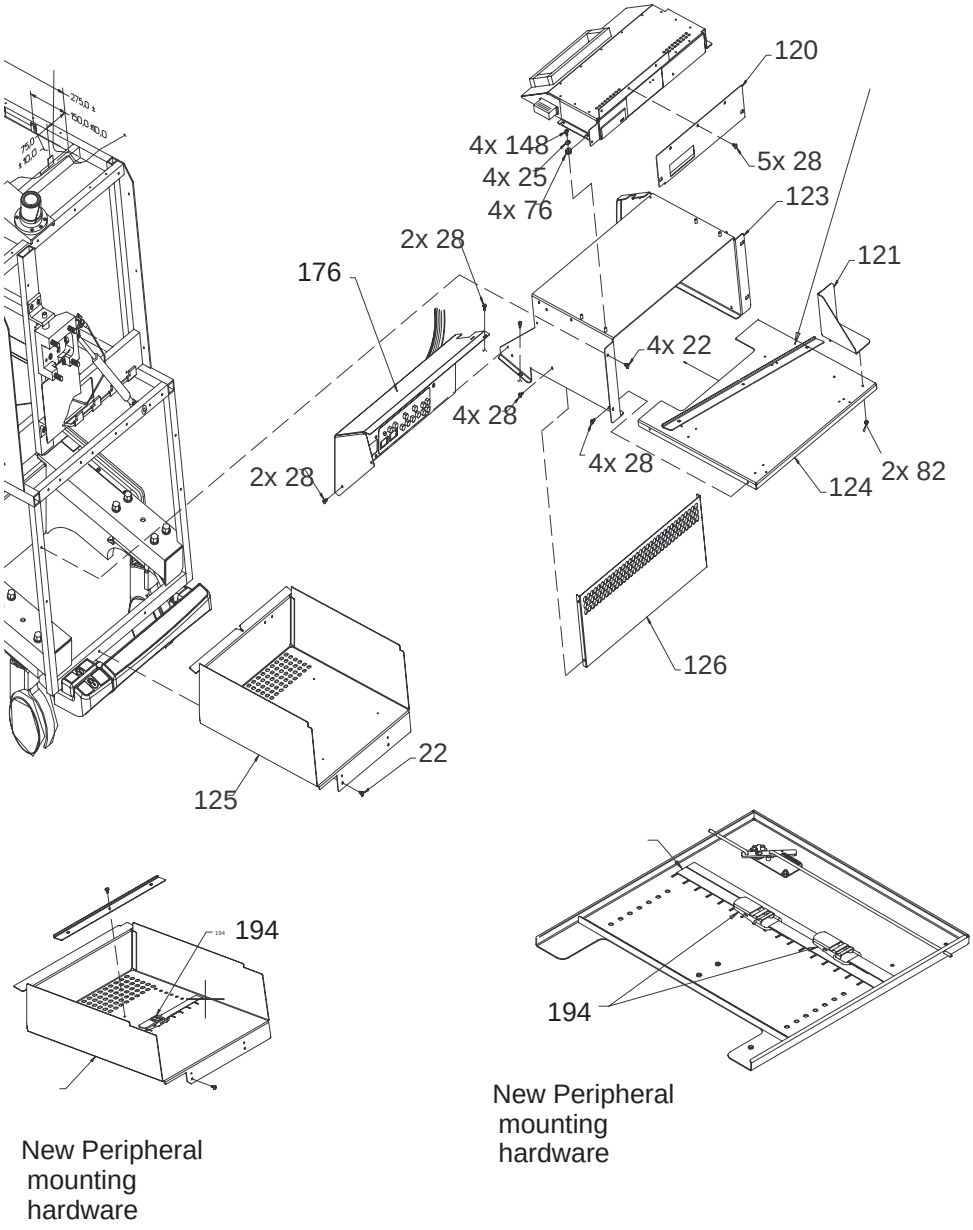

FRAME ASSEMBLY
ILLUSTRATION 9–24

FRAME

TABLE 9–24
FRAME ASSEMBLY

ITEM	NAME	FRU	PART NUMBER	QTY	DESCRIPTION
1	DRIVE BOX ASSEMBLY	REF		1	See illustration 9–16 for breakdown
22	SCREW, PAN HEAD	KIT 1		51	M5 X 0.8 X 16 mm
25	FLAT WASHER	KIT 1		35	5.3 X 15 X 1.6 mm
28	SCREW, PAN HEAD	KIT 1		42	M5 X 0.8 X 8mm
120	DRIVE FACE PLATE	2	2218259	1	
121	DISC STORAGE BOX	2	2220421	1	
124	PERIPHERAL UPPER SHELF	2	2211668	1	BT99
			2268224		BT00
125	PERIPHERAL LOWER SHELF	2	2211669	1	BT99
			2257811		BT00
126	PERIPHERAL BOX FILLER PANEL	2	2211856	1	
176	FRONT BULKHEAD ASM	REF		1	See illustration 9–15 for breakdown
180	PERIPHERAL MOUNTING STRAP	1	2261095	3	BT00

FRAME

CAUTION

POTENTIAL MECHANICAL HAZARD
Gas spring places linear bearing under pressure in the upward direction. Before you disconnect item 122, place control panel in its highest position. Take care when you squeeze item 89 down to adjust the height of the linear bearing.

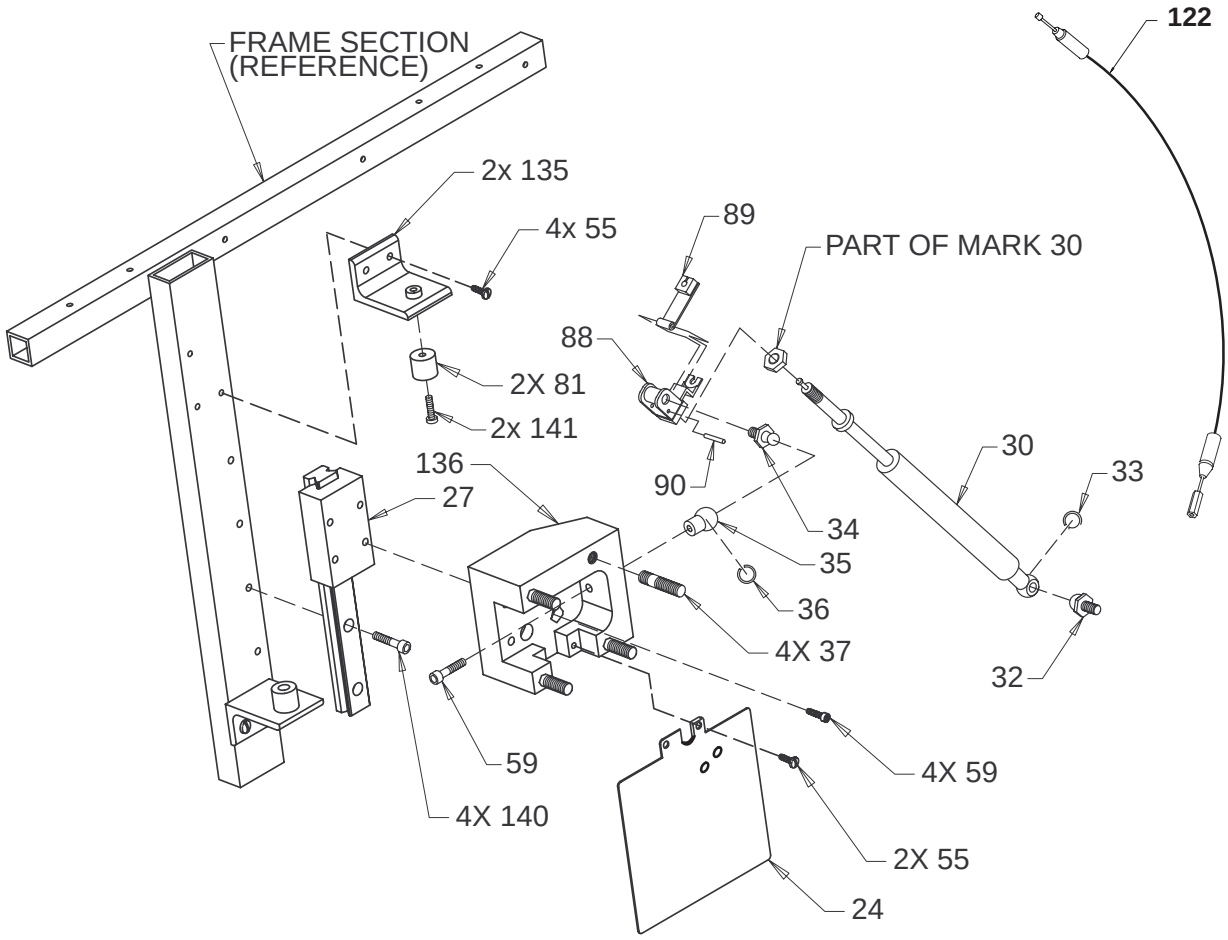

GAS SPRING ASSEMBLY BREAKDOWN
ILLUSTRATION 9–25

FRAME

TABLE 9–25
GAS SPRING ASSEMBLY BREAKDOWN

ITEM	NAME	FRU	PART NUMBER	QTY	DESCRIPTION
24	BEARING TRAVEL TONGUE	N	2203718	1	
27	LINEAR BEARING	2	2198797–2	1	
30	GAS SPRING	1	2120474–9	1	Includes items 32–36, 59, and 88–90
32	BALL STUD	2	46–312224P2	1	Part of item 30
33	RETAINING CLIP	KIT 6		1	Part of item 30
34	MOUNTING STUD	N		1	Part of item 30
35	BALL SOCKET	1	46–312224P6	1	Part of item 30
36	BALL SOCKET CLIP	KIT 6		1	Part of item 30
37	MOUNTING BLOCK STUD	N		4	
55	FREEDRIVE PAN HEAD SCREW	KIT 1		6	M5 X 0.8 X 8 mm
59	HEX SOCKET HEAD CAP SCREW	KIT 6		5	M6x1x25mm – part of item 30
81	RUBBER STOP	2	46–326255P1	2	
88	BLOCK	N		1	Part of item 30
89	PIVOT ARM	N		1	Part of item 30
90	SPRING PIN	N		1	Part of item 30
122	GAS SPRING CABLE #2	1	2114467	1	
135	STOP BRACKET	2	2195645	2	
136	BEARING BLOCK	N		1	
140	HEX SOCKET HEAD CAP SCREW	N		2	
141	FREEDRIVE PAN HEAD SCREW	N	46–312358P54	2	M5 X 0.8 X 25 mm

FRAME

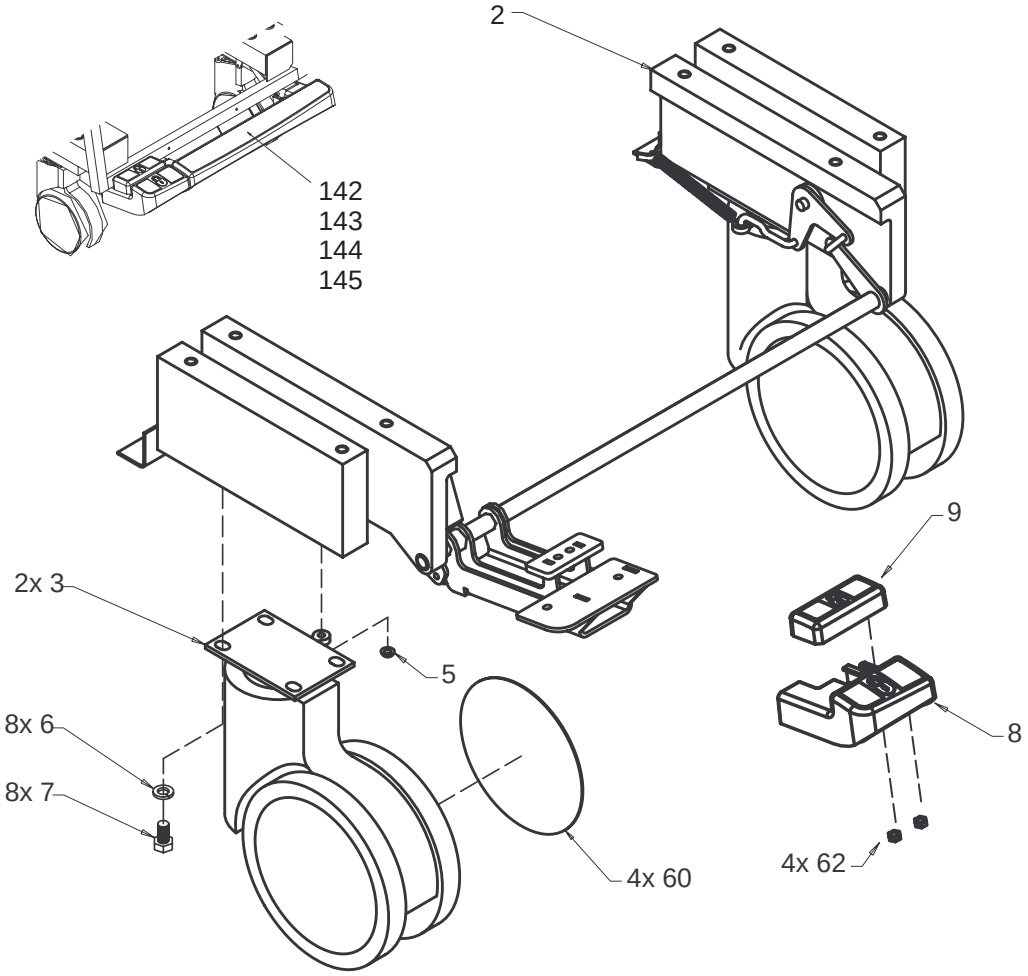

FRONT WHEEL ASSEMBLY BREAKDOWN
ILLUSTRATION 9–26

FRAME

TABLE 9–26
FRONT WHEEL ASSEMBLY BREAKDOWN

ITEM	NAME	FRU	PART NUMBER	QTY	DESCRIPTION
2	FRONT WHEEL AND BRAKE ASSEMBLY	1	2225836	REF	
3	CASTER	1	2160395	2	Includes two each of items 5 and 60
5	PUSH NUT			2	
6	HELICAL LOCK WASHER			8	M8
7	HEX HEAD CAP SCREW			8	M8x1.25x16mm
*8	BRAKE PEDAL PAD	1	2225838 or 2225838–2	1	Light gray Dark gray
*9	BRAKE RELEASE PEDAL PAD	1	2225837 or 2225837–2	1	Light gray Dark gray
60	CASTER COVER	1	2160396	4	
62	NUT	KIT 2		AR	M5x0.8 hex nut w/ integral lock washer
142	FOOTREST SUPPORT ARM	2	2227588	2	
143	STOP BLOCK	N			
*144	COVER FOOTREST	1	2226201 or 2226201–2	1	Light gray Dark gray
145	SCREW	KIT 6		4	6 mm X 35 mm hexagon socket

***** Replace as set , do not mix the light gray parts (without the –2 part number) with the dark gray parts (with the –2 part number)

SOFTWARE

TABLE 9–27
SOFTWARE

Software	Part Number	Comments
R8.0 Software MOD Disks (3)	2177069–7	Breakthrough 99 software
R8.3 Software MOD Disks (3)	2177069–12	Breakthrough 99 upgrade software
R9.0 Software MOD Disks (3)	2177069–13	Breakthrough 00 software

KITS

TABLE 9–28
RENEWAL PART KITS

Name	Part Number	Description	For Contents See Table
KIT 1	2113295	TOP LEVEL ASSEMBLY	9–29
KIT 2	2113295–2	AC DISTRIBUTION ASSEMBLY	9–30
KIT 3	2113295–3	CARD CAGE ASSEMBLY – BE SIDE	9–31
KIT 4	2113295–4	BULKHEAD ASSEMBLY	9–32
KIT 5	2113295–5	CARD CAGE ASSEMBLY – FE SIDE	9–33
KIT 6	2113295–6	FRAME ASSEMBLY	9–34
KIT 7	2113295–7	MONITOR ASSEMBLY	9–35
KIT 8	2113295–8	OPERATOR CONSOLE ASSEMBLY	9–36
KIT 9	2113295–9	COURTESY KIT	9–37
KIT D	See Table 9–38.	KEY CAP DIFFUSERS	9–38
KIT M	2122406–3	OPERATOR PANEL MISCELLANEOUS	9–39
KIT K	2122406–5	KEY CAP PARTS	9–40
KIT P	2122406–6	P1/P2 CHOICE DIFFUSERS	9–41
KIT S	2122406–4	TGC SLIDE POT CAPS	N/A

KITS

TABLE 9–29
CONTENTS OF KIT 1 (2113295)

KIT 1: Hardware for Unit Sub Assemblies	Kit Qty
M10x1.5x25mm metric hex head cap screw	5
M10 hex nut	5
M10 plain washer	5
M10 spring lock washer	5
10.5x21x2mm flat washer	5
M10 helical lock washer	5
M6x1mm hex nut w/ lock washer	5
6.4x12.5x1.6mm zp st din flat washer	5
M5x0.8x16mm freedrive pan head screw	5
M5x0.8x8mm freedrive pan head screw	5
5.3x15x1.6mm flat washer	5
Metric hex spacer; male/female	5
M5 x 0.8 x 35mm metric pan head screw	5
M5 x 0.8 hex nut with attached tooth lock washer	5
5.3 x 10 x 1 flat washer	5
M3x0.5x6mm metric freedrive pan head screw	5
M3 x 0.5 x 10mm freedrive recessed pan head screw	5
M2.5 x 6 cross recessed c ’sunk flat head screw	5
M2.5 x 0.45x5mm metric freedrive pan head screw	5
002–56 x 0.187 long bind head screw	5
006–32 x 0.187 long bind head stl f70B5A zinc screw	5
Grommet	5
Nylon hex stand off	5

TABLE 9–30
CONTENTS OF KIT 2 (2113295–2)

KIT 2: Power Distribution	Kit Qty
Opaque white thermal joint compound, 2 oz.	1
5.3x10x1mm flat washer	5
6.4x12.5x1.6mm flat washer	5
M6x1 metric hex nut	5
M3x0.5x6mm freedrive pan head screw	5
M4x0.7x8mm freedrive pan head screw	5
M5x0.8x8mm freedrive pan head screw	5
M4x0.7x30mm hex socket head cap screw	5
M5x0.8x20mm hex head cap screw	5
Ground plug	5
Washer, color coded	5
M5x0.8 hex nut w/ integral lock washer	5
M3 x 0.5 x 16mm metric pan head screw	5

KITS

TABLE 9–31
CONTENTS OF KIT 3 (2113295–3)

KIT 3: Card Cage – BE Side	Kit Qty
IACK jumpers	20
4.3 x 9 x 0.8 flat washer	5
6.4x12.5x1.6 flat washer	5
M4 helical lock washer	5
M6 helical lock washer	5
M3 helical lock washer	5
M6 x 1 metric hex head screw	5
M2.5 x 0.45 x 10 mm freedrive cross recessed pan head machine screw	5
M3 x 0.5 x 6mm metric freedrive cross recessed pan head machine screw	5
M4 x 0.7 x 10mm metric freedrive cross recessed pan head machine screw	5
M4 x 0.7 x 16mm metric freedrive corss recessed pan head machine screw	5
Collar screw for vme type plate asm use w/ metal sleeve	5
Metal sleeve for vme type plate asm use w/ collar screw	5

TABLE 9–32
CONTENTS OF KIT 4 (2113295–4)

KIT 4: Bulkhead	Kit Qty
Slide lock; Amp 745583–1 15 pin ADP–20Hsg	5
Bail lock; Amp 552567–1	5
M3x0.5 hex nut	5
M2x0.4 metric hex nut	5
M3x0.5x6mm freedrive pan head screw	5
Female screwlock	5
Shoulder washer	5
M2 x 0.4 x 12mm metric freedrive pan head machine screw	5

KITS

TABLE 9–33
CONTENTS OF KIT 5 (2113295–5)

KIT 5: Card Cage – FE side	Kit Qty
4.3 x 9 x 0.8 zp st din screw	5
6.4 X 12.5 X 1.6 flat washer	5
M4 helical lock washer	5
M6 helical lock washer	5
M3 helical lock washer	5
M6 x 1 metric hex nut	5
M2.5 x 0.45 x 10mm freedrive cross recessed pan head machine screw	5
M3x0.5x6mm freedrive pan head screw	5
M3x0.5x10mm Freedrive pan head screw	5
M4 x 0.7 x 10mm metric freedrive cross recessed pan head machine screw	5
M4 x 0.7 x 16mm metric freedrive cross recessed pan head screw	5
Collar screw for vme type plate use w/ 46–312384P1	5
Metal sleeve for vme type plate use w/ 46–312383P1 collar screws	5

TABLE 9–34
CONTENTS OF KIT 6 (2113295–6)

KIT 6: Frame	Kit Qty
Heyco pt no. 2872 split body bushing	5
M5 x 0.8 x 16 hex socket head cap screw	5
5.3 x 10 x 1 zp st din flat washer	5
Lower clip for gas spring	5
Upper clip for gas spring	5
M5 x 0.8 metric hex nut	5
M5 x 0.8 x 8mm metric freedrive cross recessed pan head machine screw	5
M5 x 0.8 x 15mm metric freedrive cross recessed pan head screw	5
Grommet	5
Hex spacer	5
Banana jack	5
Ribbed grommet	5
M10 flat washer	5
No 85 1/4 turn fastener clip	5
No 85 1/4 turn stud fastener	5
Southco 1/4 turn No 85 push on retaining ring	5
Shipment bolt male/female hex spacer (SEISMIC ANCHOR)	5
Top/side cover clip	5
tension clip, speaker cover	5
M10 x 25 hex head screw	5
M10 x 25 hex socket head cap screw	5
M6 x 25 hex socket head cap screw	5
M10 hex nut	5
M10 x 40 hex socket head cap screw	5
M10 spring lock washer	5
M5 helical lock washer	5

KITS

TABLE 9–35
CONTENTS OF KIT (7 2113295–7)

KIT 7: Monitor	Kit Qty
M4x0.7x6mm freedrive pan head screw	5
M4x0.7x10mm freedrive pan head screw	5
M4x0.7x25mm freedrive pan head screw	5
M6x1x16mm hex socket head cap screw	5
M6x1.0–6Gx12.0mm hex head set screw	5
M8x12mm hex socket shoulder screw	5
Friction disk A	5
Belleville spring washer	5
Oval head screw KA30x8mm	5
Oval head screw KA30x16mm	5
Friction disk B, monitor tilt	5
Modified shoulder screw	5
M4x0.7x8mm metric freedrive pan head screw	5
4.3 x 9 x 0.8 zp st din flat washer	5
Spacer	5
Washer	5

TABLE 9–36
CONTENTS OF KIT 8 (2113295–8)

KIT 8: OP I/O	Kit Qty
3.2 x 7 x –.5 zp st din flat washer	5
5.3 x 10 x 1 flat washer	5
M5 helical lock washer	5
M3 helical lock washer	5
M3 x 0.5 x 8mm Phillips cross recessed flat head machine screw	5
M3 x 0.5 x 16mm metric freedrive cross recessed pan head machine screw	5
M5 x 0.8 x 12mm metric freedrive cross recessed pan head machine screw	5
M3 x 18mm threaded hex spacer (male/female threads)	5
M3 x 0.5 x 6.0 metric cross recessed pan head w/ attached lock washer	5
M3 x 0.5 x 8.0 pan head machine screw w/ attached lock washer	5
M3 x 0.5 x 5.0 socket set screw w/ cup point	5
M3 x 0.5 x 10 pan head machine screw w/ helical washer	5
M5 x 0.8 x 20mm metric freedrive zinc plated cross recessed pan head screw	5

KITS

TABLE 9–37
CONTENTS OF KIT 9 (2113295–9)

KIT 9: Courtesy Kit	Where	Quantity
M2.5 x 0.45 x 6 mm freedrive pan head screw	TD RF shield cover	10
M3 x 0.5 x 6 mm freedrive pan head screw	TD internal RF shield box	10
M3.5 x 0.6 x 6 mm screw	Power supply	10
M5 x 0.8 x 8 mm freedrive pan head screw	Covers	10
5.3 x 15 x 1.6 mm flat washer	Covers	10
M6 x 1 mm hex nut w/ lock washer	Power supply	10
IACK jumpers	BE card cage	10
Male/Female hex spacer	Rear cover, PS, speakers	10
Upper clip for gas spring	Gas spring	10
Lower clip for gas spring	Gas spring	10

TABLE 9–38
CONTENTS OF KIT D

KIT D: Key Cap Diffusers*	Label
16MM DIFFUSER	B FLOW
16MM DIFFUSER	AUTO 3D
16MM DIFFUSER	HARMONICS
16MM DIFFUSER	PDI
16MM DIFFUSER	MULTI FREQ
16MM DIFFUSER	MULTI IMAGE
OVAL DIFFUSER	IMAGE SELECT
16MM DIFFUSER	PLAY/STOP
16MM DIFFUSER	RECORD
16MM DIFFUSER	ARCHIVE MENU
20MM DIFFUSER	CALC
20MM DIFFUSER	AUTO OPTIMIZE
20MM DIFFUSER	PDI
16MM DIFFUSER	TRACE
16MM DIFFUSER	CALIPER
OVAL DIFFUSER	SET
20MM DIFFUSER	M
OVAL DIFFUSER	ZOOM
16MM DIFFUSER	INVERT
16MM DIFFUSER	CURSOR
20MM DIFFUSER	CF
OVAL DIFFUSER	FREEZE
20MM DIFFUSER	PW
20MM DIFFUSER	UPDATE
* Part number for kit is as follows: English – 2122406–2; French– 2134445; German– 2134446; Italian– 2134447; Spanish– 2134444; Portuguese– 2241409; Swedish– 2243243; Danish–224–3244;Turkish – 2243245; Russian – 2243246; Greek – 2243247;	

KITS

TABLE 9–39
CONTENTS OF KIT K (2122406–5)

KIT K: OP Panel Kit Cap Parts	Kit Qty
16 mm switch cap	13
16 mm lens	13
16 mm blank diffuser	13
20 mm switch cap	7
20 mm lens	7
20 mm blank diffuser	7
OVAL double switch cap	4
OVAL double lens	4
OVAL blank diffuser	4

TABLE 9–40
CONTENTS OF KIT M (2122406–3)

KIT M: OP Panel Miscellaneous Parts	Kit Qty
toggle switch cap	17
set screw	7
joy disk	1
single rotary encoder knob	2
foam pad for track ball	1
foam pad for ROI disk	1
ROI pad	1

KITS

TABLE 9–41
CONTENTS OF KIT P (2122406–6)

KIT P: P1/P2 Custom Key Cap Diffusers	LABEL
20MM DIFFUSER	COLOR PRINTER P1
	B/W PRINTER P1
	DIGITAL ARCHIVE P1
	EXT. ARCHIVE P1
	GRAY ARCHIVE P1
	COLOR ARCHIVE P1
	CAMERA P1
	LASER P1
	MISC. P1
	*
16MM DIFFUSER	COLOR PRINTER P2
	B/W PRINTER P2
	DIGITAL ARCHIVE P2
	GRAY ARCHIVE P2
	COLOR ARCHIVE P2
	EXT. ARCHIVE P2
	CAMERA P2
	LASER P2
	MISC. P2

TABLE 9–42
CONTENTS OF KIT Q (2243577)

KIT Q: Miscellaneous Probe Holder Parts	Kit Qty
MOUNTING PLATE	1
KNOB	2
SCREW M5 X 25	2
NUT M5 KEPS nut	1
PROBE STRAIN RELIEF	1

KITS

TABLE 9–43
OTHER KITS AND TOOLS

FRU name	Part Number	Comments
Anti Static Kit	**46–194427P231**	Kit includes anti–static mat, wrist strap and connecting cables
	46–194427P279	for 200 to 240 V system
	46–194427P369	3M #2204 Large adjustable wrist strap
	46–194427P373	3M #2214 Small adjustable wrist strap
	46–194427P370	3M #3051 conductive ground cord
QIQ Phantom	E8370RB	RMI Grayscale Target
	E8370RE	Small Parts, Near Field
Paint	46–208777P1	Mist Gray 4.5 oz. aerosol can
	46–303460P1	Mist Gray 0.6 oz. brush on
	2119399	Accent Gray 4.5 oz. aerosol can
	2119398	Accent Gray 0.6 oz. brush on
Service Tool Kit	**2113297**	Kit includes each of the following:
	2101531	Board removal pipes
	2117811	MOD diskette cleaner
	2117638–3	Diag PC to SERVICE port (null modem) cable
	2117812	Service outlet extension
	2107545–2	Dale 600 adapter for L700 probes
	2119205	Dale 600 20A plug adapter for 120 VAC units
	2117813	Flat blade screwdriver
	2117813–3	Allen key wrenches (1.5 to 10 mm)
	2117813–5	17 mm open/box end wrench
	2117813–6	8 mm nut driver
MOD Head Cleaner Kit	2148392	Important to clean MOD drive often for sites doing Digital Archive
Footswitch	H40582L	Two pedals to (Freeze) or perform (P1) action
Safety Analyzer	46–285652G1	DALE 600 KIT for electrical tests (includes probe adapter)
Monitor Cable Puller	2128293	Helps route monitor cables over the card cage
Basic Service Key	2119029–16	MOD provides gemsC diag access (Expires DEC 25 2025)
Loopback	2116343	Front End diagnostic tool
DICOM Network Troubleshooting Kit	2183646	HUB, CABLES, XCVRS, ADAPTERS
Test Lead/Jumper Wire	2252511	Used to check 100VPA and 100VNA on backplane.

9–6 PACKING CIRCUIT CARDS FOR RESHIPMENT

Save the shipping materials that were used to deliver the new circuit card. Use the materials that were saved to pack the old circuit card for shipment. Always ensure that the circuit card connectors face the ends of the box with the folds and bubble wrap.. Otherwise, the connectors are likely to be damaged during shipment.

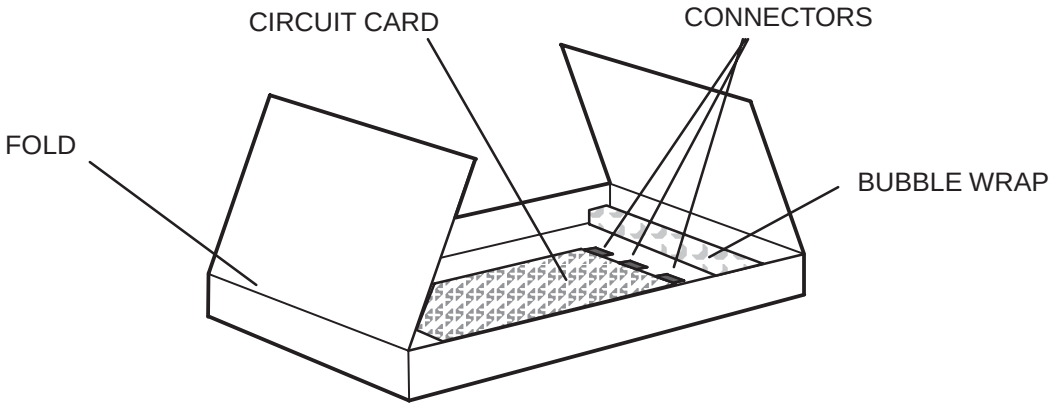

PACKING A CIRCUIT CARD FOR SHIPMENT
ILLUSTRATION 9–27

SECTION 10 – PLANNED MAINTENANCE

TABLE OF CONTENTS

SECTION	TITLE	PAGE
10–1	PURPOSE OF SECTION	10–2
10–2	PLANNED MAINTENANCE (PM)	10–3
10–2–1	PM Program Objectives	10–3
10–2–2	PM Records	10–3
10–2–3	PM Schedule	10–3
10–2–4	GEMS Support Centers	10–3
10–2–5	Tool Requirements	10–4
10–2–6	Working with Paints	10–4
10–3	SYSTEM MAINTENANCE	10–5
10–3–1	System Preliminary Checks	10–5
10–3–2	System Functional Checks	10–6
10–3–3	System Physical Checks and Cleaning	10–8
10–3–4	System Diagnostic Checks	10–11
10–4	PROBE MAINTENANCE	10–12
10–4–1	Probe Physical Care	10–12
10–4–2	Probe Electrical Safety	10–13
10–4–3	Probe Cleaning/Disinfection	10–13
	PM Inspection Certificate	10–15

10–1 PURPOSE OF SECTION

This section describes how to do Planned Maintenance (PM) on the unit and its peripherals. **These PM procedures are suggestions. If you have a better idea, please inform an Electric Avenue Service Engineer.**

DANGER **There are several places on the backplane, the AC Distribution, and DC Distribution that are dangerous. Be sure to disconnect the system power plug and open the main circuit breaker before you remove any parts. Be cautious whenever power is still on and covers are removed.**

Note

Measure the voltages that are shaded in the tables at their sensed destination on the backplane, not at the supply. These shaded outputs vary at the supply to maintain a constant voltage at the load.

CAUTION **Do not operate this unit unless all board covers and frame panels are securely in place. System performance and cooling require this.**

CAUTION **Do not pull or insert circuit boards while power is ON. After a power supply or its wiring has been removed and replaced, pull all the TD boards from their slots before you reapply power for the first time. After measuring that all outputs are at the correct level and polarity, remove power, reinsert boards, then reapply power.**

CAUTION **Do not arbitrarily reseat all circuit boards. The backplane connectors are only rated for 250 insertions. Remove any dirt you see.**

CAUTION **Practice good ESD prevention. Wear an anti–static strap when handling electronic parts and even when just (dis)connecting cables.**

10–2 PLANNED MAINTENANCE (PM)

10–2–1 PM Program Objectives

Electronic components change with age. Mechanical parts wear out. Day to day use can lead to dirt inside components or damaged parts. Signs of impending break down are known from experience. Examples of impending breakdown include power supply ripple, loose connectors, chaffed insulation, etc. Looking for these indicators and fixing them before down time results has a number of positive effects, including:

- Improved customer satisfaction
- Assurance the system is safe to use
- Verification that the system is operating as specified
- Imaging that is as good as possible

10–2–2 PM Records

Some organizations that regulate medical institutions require planned maintenance for medical equipment. Many institutions must have the documented proof of the planned maintenance in order to receive accreditation each year. The Ultrasound Planned Maintenance Inspection Certificate provides the customer with such a document for their records. The Inspection Certificate should also be used to assure that demonstration equipment is routinely inspected for proper operation.

A copy of the Ultrasound Planned Maintenance Inspection Certificate should be kept in the same room or near the system. It serves as a reference for both customer and Service.

10–2–3 PM Schedule

Two PM inspections are recommended per year for the LOGIQ™ 700. Each inspection requires about 4 hours to perform. This estimate, and the time estimates given in later paragraphs for individual portions of the inspection, do not include the time to perform corrective actions.

10–2–4 GEMS Support Centers

Toll–free telephone numbers for GEMS Support Centers in countries around the world are listed in Table 10–1. For GEMSE countries without a toll free number, call: International Code + 33 1 39 20 00 07

TABLE 10–1
TOLL–FREE PHONE NUMBERS FOR GEMS SUPPORT CENTERS

Country	Phone Number
AUSTRIA	0660 8459
BELGIUM	078 11 1733
FRANCE	05 49 33 71
GERMANY	0130 81 6370
ITALY	1678 744 73
JAPAN & ASIA	81–426–56–0019
LUXEMBOURG	0800 2603
NETHERLANDS	06 022 3797
PORTUGAL	05 05 33 7313
SPAIN	900 95 3349
SWEDEN	020 795 433
SWITZERLAND	155 5306
UNITED KINGDOM	0800 89 7905
USA & CANADA	1–800–321–7937

10–2–5 Tool Requirements

TABLE 10–2
TOOL REQUIREMENTS FOR PLANNED MAINTENANCE

Tool	Part Number	Comments
Digital Volt Meter (DVM)		
VT220 Terminal		can be simulated with a personal computer and software
Service Outlet Adapter Cord	2117812	
Anti Static Kit	**46–194427P231**	Kit includes anti–static mat, wrist strap and cables
	46–194427P279	for 200 to 240 V system
	46–194427P369	3M #2204 Large adjustable wrist strap
	46–194427P373	3M #2214 Small adjustable wrist strap
	46–194427P370	3M #3051 conductive ground cord
Anti Static Vacuum Cleaner	46–194427P278	120V
	46–194427P279	230V
Air Filter	46–330015P1	air intake
Safety Analyzer	46–285652G1	DALE 600 KIT for electrical tests
VCR Cassette	E7010GG	60 minute
	E7010GF	120 minute
MOD MEDIA	E8381AA	blank 128 M disk
	E8381AB	blank 230 M disk
MOD Media Cleaner	2117811	cleans the diskettes
MOD Head Cleaner Kit	2148392	cleans the drive
QIQ Phantom	E8370RB	RMI Grayscale Target
	E8370RE	Small Parts, Near Field
Operator Manual	2227866–100	R8
Service Manual	2227894	
Basic Service Key	2119029–16	MOD provides gemsC diag access
Loopback	2116343	Front End diagnostic tool
Paint	46–208777P1	Mist Gray 4.5 oz. aerosol can
	46–303460P1	Mist Gray 0.6 oz. brush on
	2119399	Accent Gray 4.5 oz. aerosol can
	2119398	Accent Gray 0.6 oz. brush on

10–2–6 Working with Paints

Before using, turn the paint container upside down and shake it vigorously for at least one minute. Brush On Paint is intended for small blemishes, aerosols for larger areas. **But before using an aerosol paint, make sure the site owner approves.** Limit amount of spraying on the site to three or four 25 mm wide applications. If more is needed, make arrangements so that overspray will not be a problem.

10–3 SYSTEM MAINTENANCE

10–3–1 System Preliminary Checks

The preliminary PM checks should take about 15 minutes to complete. Perform these checks as described below.

✓	Step	Procedure
	1	Ask the user if there are any problems or questions about the equipment.
	2	Turn system power ON and verify that all fans and peripherals turn on. Watch softkey display during power up to verify no warning messages or errors are displayed.
	3	Lift each probe one at a time from its slot. Verify the system properly recognizes all transducers. Use **[Code S]** to see whether the proper probe type IDs are listed on the softkeys.
	4	Check the grayscale, clock, date, and hospital name on the display monitor.
	5	Check the alphanumerics on the softkey display.
	6	Display and archive the customer's personalized OB Tables.
	7	Scan a soft tissue phantom and verify a good image is displayed on the monitor.

10–3–2 System Functional Checks

The Functional Checks and diagnostic checks, together, take about 90 minutes. Perform these checks as described below, referencing the Users Manual if more information on operation is needed.

✓	Step	Item	Procedure
	1	**power supplies**	Check all power supplies with a DVM. Many are checked at the supplies; but 5V, 5VN, 5VNA, and 5VPA which have remote sensing should be measured at the backplane. All FE power levels can also be checked at the white P1, P2, and P3 connectors on the BP behind the EQ and labeled A14. See page 5–28.
	2	**control panel**	To check panel lights, keyboard buttons and switches, turn off the unit. Then hold down the X and C keys and turn power back on. Hold for about two seconds. **NOTE:** The END EXAM, CALC, and COMMENT keys are not mapped the OP panel firmware and will not respond to the test when checked. The Body pattern key will report as key 135. The Op Panel Test should start. Note whether VFD pixels and which if any lamps are burnt out. Press and hold down X and C again to go to next level. Determine whether there are any bad switches or encoders. Press X and C again to exit this diagnostic.
	3	**system controls**	Check system controls, preferably while scanning a phantom. Refer to User Manual, Quick Guide or Online Help. • Focal Number and Position • Depth and verify scale markers adjust • Gain • Invert • TGC • Zoom • Cine
	4	**M**	Switch **M** ON and check the following: • Sweep Speed • Freeze
	5	**CF**	Switch **CF** ON and check the following: • Adjust color window size and position • Velocity Tag
	6	**PW**	Switch **PW** ON and check the following: • Velocity Scale • Freeze • Baseline • Switch **PW** off

10–3–2 System Functional Checks (Continued)

✓	Step	Item	Procedure
	7	**measure-ments**	Check the controls related to measurements. Use the phantom to verify distance and area calculation accuracy (±0.2 cm).
	8	**archive**	If PRESETS **[Code P]** have been setup to archive images with a press of **(P1)** or **(P2)**, then archive an image to the hard drive and copy it to an MOD diskette. A plus sign in front of an **[Archive Menu]** entry means it's on the MOD; no plus sign means it's in the Archive directory on the hard drive. Retrieve the image file back to the hard drive.
	9	**video checks**	Press **[Code K]** and select `Video Test Pattern`. Then using Archive functionality, display each video pattern. Verify proper display on the monitor and on each hardcopy device. Press **[Freeze]** to exit.
	10	**VCR**	Verify ability to record, replay and search. Clean heads if necessary.
	11	**color printer**	Verify hardcopy output and adjust if necessary. Verify RS232 communication to device from the LOGIQ™ 700 front panel if applicable.
	12	**page printer**	Verify hardcopy output and adjust if necessary. Clean heads. Verify RS232 communication to device from the LOGIQ™ 700 front panel if applicable.
	13	**camera**	Verify hardcopy output and adjust if necessary. Clean optics if dust is present. Verify RS232 communication to device if applicable.
	14	**footswitch (option)**	If a footswitch is used on this unit, verify that the left pedal will **(Freeze)** and unfreeze the image. Verify that the right pedal performs the **(P1)** action.
	15	**3D (option)**	Freeze a B or B/CF image, roll trackball and select images to be included. Select CREATE 3D will offer two new menu screens: one to prescribe the desired view, the other to render that view or return to 2D Cine. Minimum Projection enhances dark objects and max enhances bright objects.
	16	**MR Flow**	When this option is working, you can have more than one focal point in the color flow area. This option can also be turned on or off through the first page of the General System Presets.
	17	**DICOM (option)**	Go to the DICOM STATUS page [Code N], Select each device, trackball to the VERIFY button, and highlight **Echo Test**, and press **[Set]**. The result should be 'GOOD.' Send an image to a DICOM device. Verify the image successfully reached it.
	18	**InSite (option)**	Call InSite for On Line Tests. Have system serial number and ID and modem phone number and model ready. Boot system with modem ON and connected. Enable InSite Access by typing: **[Code I]**. While InSite checks communication, the LEDs on RD and SD (TD) will flicker. The OH LED will go out when InSite is disconnected. After a verbal exchange with InSite, leave modem ON and connected to system if this is acceptable to the customer. Refer to Direction 46–030409 for more information.

10–3–3 System Physical Checks and Cleaning

These physical PM checks and cleaning should take about one hour. Perform these checks as described below.

✓	Step	Item	Procedure
	1	**console**	Power down and unplug the system. Clean the console and keyboard.
	2	**probe holders**	Clean the probe holders with warm water and a wrung out cloth to remove all traces of gel.
	3	**labels**	Verify labeling is present, accurate, and in good condition. GENERAL ELECTRIC COMPANY MILWAUKEE, WISCONSIN MADE IN U.S.A. MODEL 2184000 S/N 367US4 MANUFACTURED FEBRUARY 1999 DESC LOGIQ 700 120V~ 60Hz 16A GENERAL ELECTRIC COMPANY MILWAUKEE, WISCONSIN MADE IN U.S.A. MODEL **2184000–4** S/N 3674US3 MANUFACTURED FEBRUARY 1999 DESC MODIFIED FOR 15A PLUG 120V~ 60Hz 12.8A Verify Rating Plate(s) IEC B or BF man label is near Ground Stud IEC BF man on upper front cover International Version CAUTION label present on rear cover 300 kg SHOCK labels are on frame front and right side, EMC shield, and above power supplies CE mark labels CE 0459 CISPR 11 / EN 55011 CLASS: A GROUP: 1 CLASSE: A GROUPE: 1 If in USA, that power cord has yellow Power Outage Warning CAUTION: Power outage may occur. To avoid circuit overload and possible loss of critical care equipment, make sure you DO NOT have any other equipment operating on the same circuit. Proper Grounding green label on power cord FOR PROPER GROUNDING CONNECT TO HOSPITAL GRADE RECEPTACLE.

10–3–3 System Physical Checks and Cleaning (Continued)

✓	Step	Item	Procedure
	4	**scratches/ cracks**	Check the console for dents, scratches, or cracks. Use touch up paint on the gray pocket or monitor cover if necessary. (Please review paint guidelines on page 10–4.) Use duct tape to close any cracks in the drip pan to assure good air flow.
	5	**control panel**	Physically inspect the keyboard for missing or damaged items. Fix any keys that wobble (stabilizer bar not latched). Verify the task light is fully operational. Replace components that you found to be bad in the Control Panel XC bootup Functional Check: VFD, lamps, switches, encoders.
	6	**linear bearing**	Verify control panel vertical ease of movement. If needed adjust actuator cable at turnbuckle bracket in the op panel casting.
	7	**wheels**	Check wheels/casters for wear and tear. Replace if necessary.
	8	**brake**	Verify the foot brake will stop the unit from moving. Check for any deterioration to the brake pad or shoes.
	9	**probes**	Check all probes for wear and tear on the lens, cable, and connector. Look for bent or damaged pins on the connector and the receptacle on the console. Verify that the EMI fingers around the probe receptacle housing are intact. Check the probe locking mechanism and probe switch.
	10	**monitor**	Clean the CRT with a soft cloth dampened with mild detergent and water, repeat this with water only, and wipe with a dry cloth. Inspect the monitor for scratches and raster burns.
	11	**filters**	Wash or replace the unit air filter. Insert clean air filter with arrow pointing into the unit. Use antistatic vacuum to clean the power supply filters. Power Supply filter access is shown in Illustration 10–2.
	12	**fans**	Verify the cooling fans and the power supply fans are working.
	13	**m a g n e t o optical drive (MOD)**	Clean the drive head and media with a vendor supplied cleaning kit. Advise the Digital Archive user to do this often to prevent problems. MOD disks must be stored away from dust and cigarette smoke. **DO NOT use alcohol or benzene to clean the MOD disk.**
	14	**bulkhead**	Check back panel connectors for bent pins, loose connections or hardware, missing hardware. Verify labeling is in good condition.
	15	**covers**	Check that all EMI shielding and screws are in place, that all chassis and internal covers are installed, that the air flow panels are in place.
	16	**peripherals**	Check and clean options per manufacturer's directions. To prevent EMI or system overheating, dress peripheral cables inside peripheral cover if they are not. Tie monitor cables to upper frame for same reasons.
	17	**power supplies**	Check the power supplies and their associated cabling for any deterioration of insulation. Verify connections are secure.
	18	**power cord**	Check power cord for cuts, loose hardware, tire marks, bent pins, exposed insulation, any deterioration; verify continuity. Tighten clamp that holds power cord to the unit and outlet plug to the cord. (See Illustration 10–1.) Replace power cord or clamp or both if needed.
	19	**electrical safety**	Following the procedures detailed in Section 3, perform leakage current and ground impedance measurements. If chassis leakage fails, test isolation of transformer. Impedance of its secondary winding to ground should be at least 2000 ohms.

10–3–3 System Physical Checks and Cleaning (Continued)

Check and tighten the brace or clamp that holds the power cord to the unit. Replace the brace, clamp, AC inlet or power cord if damaged.

SNAP CABLE OVER BUMP AS SHOWN

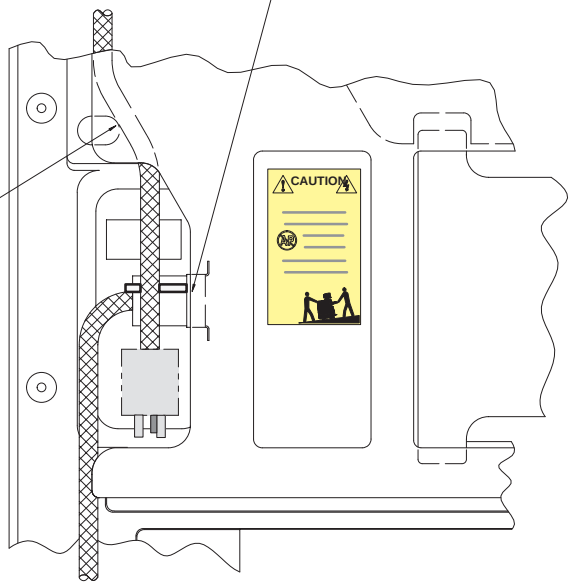

Wrap AC cord CCW so no one will tuck AC plug under AC Inlet which could cause intermittent AC problems. Tighten the hardware on the power outlet plug also.

POWER CORD REMINDERS
ILLUSTRATION 10–1

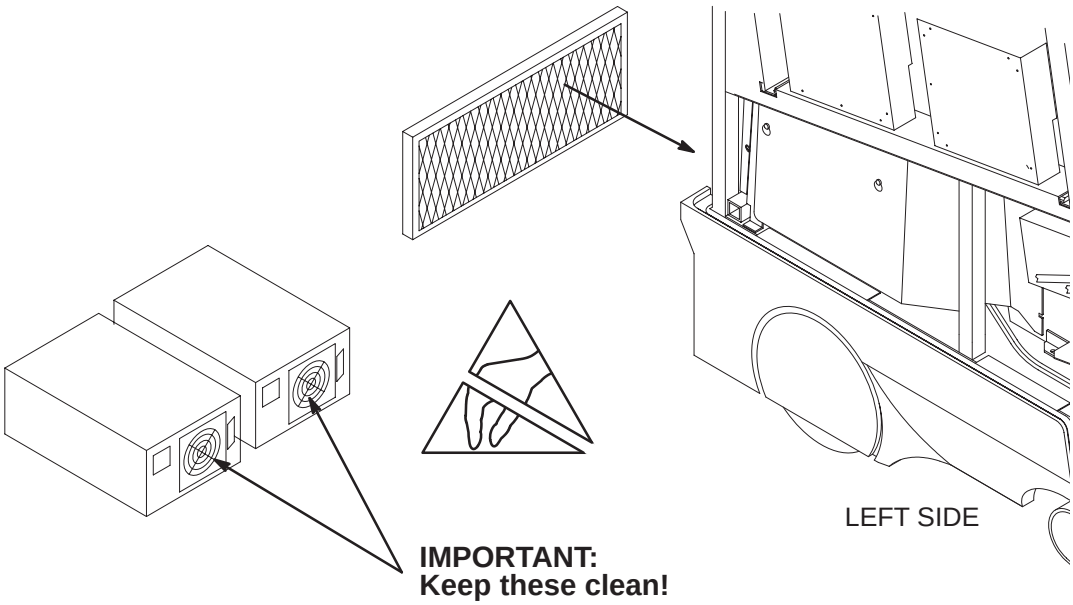

UNIT AND POWER SUPPLY FILTER LOCATIONS
ILLUSTRATION 10–2

10–3–4 System Diagnostic Checks

The Functional Checks and the Diagnostic Checks, together, take about 90 minutes. To complete the PM checks, access the gemsC software as described in Section 6. Then view the error logs and run selected diagnostics as listed below.

✓	Step	Log	Description	Comments
			VIEW THE ERROR LOGS	
	1	**Error**	Review the error log for any problems.	
	2	**Temperature**	Check the temperature log to see if there are any trends that could cause problems in the future.	
	3	**Configuration**	Check the Configuration Log; update if needed.	
			RUN SELECTED DIAGNOSTICS	
	4	**system data paths**	Run these diagnostics and review each Capture Log to verify that no errors occurred. • Gray 2D Path • Color 2D Path • M Mode Gray Path • PW Doppler Path • Kernel I & Q Data Bus • I & Q Comprehensive Path – Auto • VEQ TGC Comprehensive	
	5	**FE tests**	Attach Loopback and run Front End diagnostics. • Noise/Floor • Analog Receive • Transmit 1 • Probe Control	

Some of the techniques used to navigate within the gemsC diagnostics are summarized below. If questions arise, refer to Section 6.

- To access gemsC diagnostics, type: **[Enter] gemsC [Enter] and wait 15 seconds**.
- Use **F10** to start or return to diagnostics.
- Use **F4** to refresh screen.
- Use **F3** to move focus from menu bar to diagnostic list.
- Use **F2** to list and change test input choices.
- Use arrows, TAB, and Pg Up/Dn, Ctl L, Ctl R to move within an area.
- Use **[Enter]** to select highlighted item.
- Use **[Esc][Esc]** to close and leave diagnostic windows.

10–4 PROBE MAINTENANCE

WARNING

ELECTRIC SHOCK HAZARD
Any evidence of wear indicates the probe cannot be used.

WARNING

Ultrasound transducers can be easily damaged by improper handling. See the Operator Manual and probe care cards for more detail. Failure to follow these precautions can result in serious injury and equipment damage. Failure to properly handle or maintain a probe may also void its warranty.

CAUTION

Please do a visual check of the transducer pins and machine sockets before plugging in a probe.

10–4–1 Probe Physical Care

To obtain the longest service possible from your transducers:

- Don’t drop or strike them against anything
- Protect them when moving the unit
- Don’t pinch, stretch or kink its cable
- **Remove gel, clean, and inspect after each use**
- Use gauze and warm, soapy water to clean
- **DO NOT** use harsh detergents or abrasive cleaners.
- Avoid contact with solutions or coupling gels containing, aloe vera, perfume, mineral oil or lanolin
- **DO NOT** expose probes to temperatures above 60° C.
- **DO NOT** immerse probes beyond the level indicated in the user instructions. Probe connectors and probe electrical adaptors **SHOULD NEVER BE** immersed in any liquid.
- **Don’t use these products on any probe or the probe holder:**
  - alcohol, ethanol, isopropanol, methanol, or any alcohol-based germicides
  - ammonium chloride compounds
  - para hydroxybenzoic acid
  - hydrogen peroxide
  - dimethylsilicone
  - Olive oil
  - acetone
  - bleach
  - detergent
  - iodine

10–4–2 Probe Electrical Safety

DANGER

ELECTRIC SHOCK HAZARD
Test probes for leakage current. Excessive leakage current can cause injury or death in sensitive patients. High leakage current can also indicate degradation of insulation and potential for electrical failure. Do not use equipment having excessive leakage current.

To minimize the risk that a probe may shock someone:

- Don't use a probe that is cracked or damaged in any way
- Check probe leakage current:
  - once a year on surface probes
  - twice a year on endocavitary probes
  - **whenever probe damage is suspected**

10–4–3 Probe Cleaning/Disinfection

DANGER

Neurological procedures must NOT be done on patients with Creutzfield–Jacob disease because there is no way to adequately sterilize a probe that has been used this way. **Biological Hazard**

WARNING

Neurological procedures must be and intraoperative should be done with the use of legally marketed, sterile, pyrogen free probe sheaths.

WARNING

Probes used during neurological surgery must NOT be sterilized with liquid chemical sterilants because of the possibility of neuro toxic residues remaining on the probe.

Note

Failure to follow the prescribed cleaning or disinfection procedures will void the probe's warranty. DO NOT soak or wipe the lens with any product listed on the previous page. Doing so could result in irreparable damage to the probe. Follow care instructions that came with the probe.

Note

Disinfect a defective probe before you return it for a warranty credit. Be sure to tag the probe as being disinfected.

10–4–3 Probe Cleaning/Disinfection (Continued)

Cleaning probes

Note

To help protect yourself from blood borne diseases, wear approved disposable gloves. These are made of nitrile derived from vegetable starch to prevent allergic latex reactions.

To clean the probe (or endocavitary probe holder installed on unit),

1. Remove all coupling gel from the probe by wiping with a soft cloth and rinsing with flowing water.
2. Wash the probe with mild soap in lukewarm water. Scrub the probe as needed using a soft sponge, gauze, or cloth to remove all visible residue from the probe surface. Prolonged soaking or scrubbing with a soft bristle brush (such as a toothbrush) may be necessary if material has dried onto the probe surface.
3. Rinse the probe with enough distilled water to remove all visible soap residue.
4. Air dry or dry with a soft cloth.

CAUTION **DO NOT clean any portion of the probe with methanol, ethanol, isopropanol, or any other alcohol based cleaner. Such substances can cause irreparable damage to the probe.**

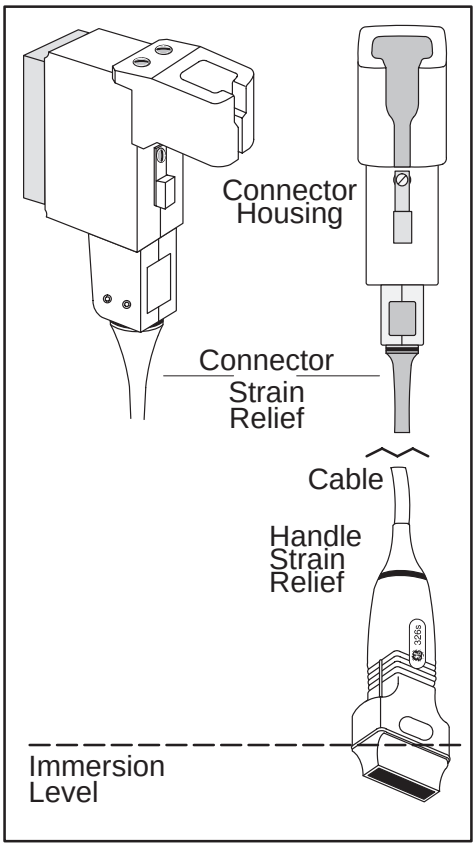

IMMERSING A PROBE
ILLUSTRATION 10–3

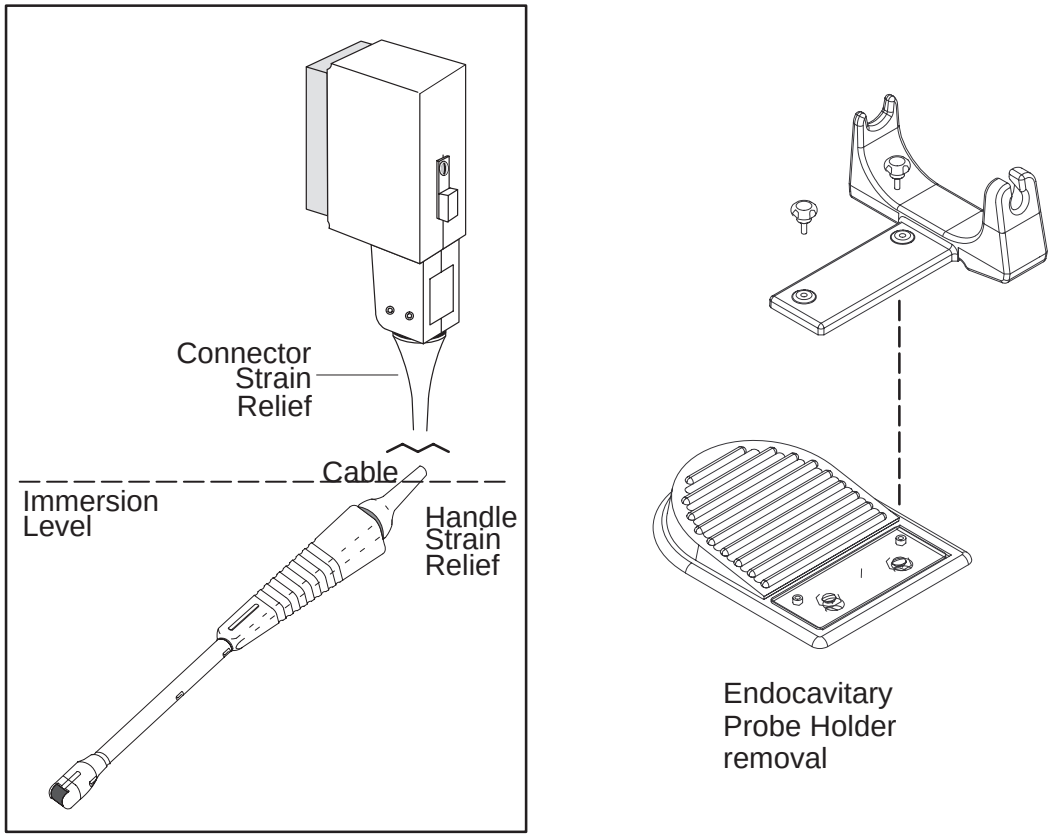

IMMERSING AN ENDOCAVITARY PROBE
ILLUSTRATION 10–4

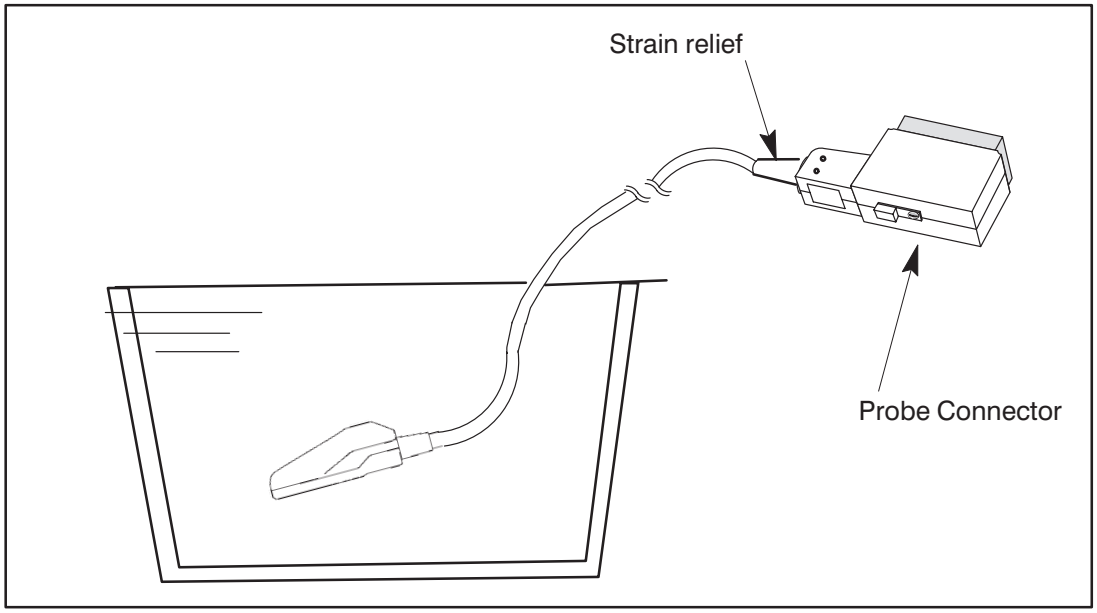

IMMERSING AN INTRA-OPERATIVE PROBE
ILLUSTRATION 10–5

Special cleaning instructions

When cleaning the 618e endocavitary probe, it is important to be sure the internal passage is also thoroughly cleaned.

1. Fill syringe with cleansing solution.
2. Attach the extension tube and syringe to the probe.
3. Flush solution through probe. If resistance is met, soak probe in warm water for a few minutes to soften dried gel/debris lodged in probe.
4. With the probe immersed in a soap solution, use the syringe to draw the solution through the internal channel. The solution should be drawn back and forth through the channel several times to assure that all material has been flushed.
5. Rinsing should be accomplished in a similar manner using the syringe and tubing. Final rinse should be made by flushing water out of probe (not drawing in).
6. After rinsing, be sure to eliminate all rinse water from the internal passage by shaking or forcing with air.

Disinfecting probes

Note

Refer to the Basic Users manual the complete list of approved High–Level Disinfectant chemicals.

Ultrasound probes can be disinfected using liquid chemical germicides. The level of disinfection is directly related to the duration of contact with the germicide. Increased contact time produces a higher level of disinfection. 2% Glutaraldehyde-based solutions, without surfactants, have been shown to be very effective for this purpose. Cidex (a glutaraldehyde based germicide) and Sporox (a non–glutaraldehyde based germicide) have been evaluated for effectiveness and compatibility with materials used in the construction of these probes. Both germicides have been cleared by the FDA for High Level Disinfection (510K).

CAUTION

In order for liquid chemical germicides to be effective, all visible residue must be removed during the cleaning process. Thoroughly clean the probe before attempting disinfection.

1. Prepare the germicide according to the manufacturer's instructions. Be sure to follow all precautions for storage, use, and disposal.
2. Place the cleaned and dried probe in contact with the germicide for the time specified by the germicide manufacturer. High-level disinfection is recommended for surface probes and is required for endocavitary and intra-operative probes (follow the germicide manufacturer's recommended time).

   Probes for neuro surgical intra-operative use **MUST NOT** be disinfected with liquid chemical germicides because of the possibility of neuro toxic residues remaining on the probe. Neurological procedures **MUST BE** done with the use of legally marketed, sterile, pyrogen-free probe sheaths.
3. After removing the probe from the germicide, rinse the probe with sterile distilled water. Hold the probe under flowing water for a minimum of sixty (60) seconds to flush germicide residue from the probe and allow to air dry.
4. Check the lens for cracking or cable insulation for separation.

5. Store the probe in its carrying case.

PM Inspection Certificate

Customer Name		System ID	LOC/Dispatch Number	Date Performed	Contract/HBS/Warranty
LOGIQ™ 700 Console		Model Number	Serial Number		Manufacture Date
Probe	Frequency	Model Number	Serial Number		Manufacture Date
Probe	Frequency	Model Number	Serial Number		Manufacture Date
Probe	Frequency	Model Number	Serial Number		Manufacture Date
Probe	Frequency	Model Number	Serial Number		Manufacture Date
Probe	Frequency	Model Number	Serial Number		Manufacture Date
Probe	Frequency	Model Number	Serial Number		Manufacture Date
Probe	Frequency	Model Number	Serial Number		Manufacture Date
Probe	Frequency	Model Number	Serial Number		Manufacture Date
Probe	Frequency	Model Number	Serial Number		Manufacture Date
Probe	Frequency	Model Number	Serial Number		Manufacture Date

Preliminary Checks	Your Initials	Comments:
		Time Estimate: 15 min

Functional Checks	✓	Time Estimate: 90 min	Comments
Power Supplies			

Voltage Measurement	PS1 output	Expected Voltage		Amps (max)	Voltage Measurement	PS2 output	Expected Voltage		Amps (max)
	5VFE	+5	±0.25	80		5VPA	+5	±0.25	80
	5VBE	+5	±0.25	40		5VNA	–5.2	±0.1	29
	5VN	+5	±0.25	20		12VPA_FE	+12	±0.75	8
	2VN	+5	±0.25	15		+70	+70	±4	3
	12VP_BE	+12	±0.6	8		+50	+50	±3	3.0
	12VN_BE	–12	±0.6	8					
					measure shaded signal at backplane, system in apps mode				

VFD/Lamps		
Switches/Encoders		
Scanning Controls		
Measurements		
Digital Archive		
Monitor Video		
VCR		
Printer		
Camera		
Other Equipment:		

PM Inspection Certificate, continued

Physical Checks	Inspect ✓	Clean ✓	Comments Time Estimate: 60 min
Console/Covers			
Labels			
Control Panel			
Linear Bearing			
Wheels			
Brake			
Transducers			
Monitor			
Filters/Fans			
Optical Drive			
Bulkhead			
VCR			
Page Printer			
Camera			
Power Supplies			
Power Cords/Inlet			

Electrical Tests	Max Value Allowed	Max Value Measured	ok ✓	Comments Time Estimate: 20 min.
Outlet				ensure good polarity & retention force
Unit Ground Continuity	**0.15 Ω**			
Normal Chassis Leakage Current or Not Normal (USA/not USA)	**100 μA or 300/500**			
Probe Leakage Current	**50 μA**			
Peripheral1 Leakage Current	**500 μA**			
Peripheral1 Ground Continuity	**0.15 Ω**			
Peripheral2 Leakage Current	**500 μA**			
Peripheral2 Ground Continuity	**0.15 Ω**			

Diagnostic Checks	✓	Time Estimate: 55 min Comments
QIQ (Refer to Chapter 6)		
System Logs		
Diagnostics		

FINAL CHECK: System covers are all in place and it scans with all probes as expected.

Intentionally blank

Numbers

3D View Option, Checking, 4−7

A

Abbreviations, Renewal parts, 9−4

Acoustic Output
  Factors, 5−6
  Theory, 5−6

Air Filter, Renewal parts, 9−6

Alarms, Beep, 8−24

ALM, Functions, 5−16

Audio, Component removal, 7−13

Audio Outputs, Checking, 8−15

B

Bar Code, Locations, 1− 18

Beamformer, Function summary, 5−5

BP, Power monitor points, 5−27

BP, Jumpers, 7−22

BMP, Functions, 5−15

Board, Packing for reshipment, 9−66

Boot Up, Description, 4−3

Brakes, Checking, 8−3

Bumper, Rear, Renewal parts, 9−26, 9−28

C

Cables, RF, Removal, 7−14

Calibration
  Test description, 6−54
  Test troubleshooting, 6−57

CALM, Functions, 5−16

CE mark, 1− 16

CFP, Functions, 5−15

Checks, Functional
  Basic System, 4−9
  Options, 4−6

CINE, Functions, 5−16

Circuit Breakers
  Complement, 7−8
  Location, 7−8

Circuit Card, Packing for reshipment, 9−66

Cleaning
  Air filters, 10−10
  Probes, 10−13

Clocks, Checking 10MHz and 40MHz, 8−7

Configuration, Unit, Checking, 3−9

Conventions
  Line thru signal name, 1− 3
  Renewal parts, 9−4
  Shading, angled stripes, 1− 3
  Shading, dark gray, 1− 3
  Shading, light gray, 1− 3
  Signal names, 1− 3

Cover, Front, Renewal parts, 9−10

Cover, Rear, Renewal parts, 9−6

Cover, side, Renewal parts, 9−6

D

Data Sheet
  DICOM network information, 2−10
  DICOM user preferences, 2−11
  Preinstallation, 2−13
  Preventive Maintenance, 10−17
  Site Log, 4−20

Diagnostic Test
  ALM components, 6−41
  ALM memory, 6−41
  ALM VME interface, 6−41
  ALM, XY, VP, CINE path, 6−41
  Analog Receive, 6−41
  B−mode test pattern, 6−41
  BMP components, 6−42
  BMP memory, 6−42
  BMP VME interface, 6−42
  BMP−ALM interface, 6−42
  Calibration, 6−43
  CALM components, 6−43
  CALM memory, 6−43
  CALM VME interface, 6−43
  CALM, XY, VP, CINE path, 6−43
  CFP full board, 6−44
  CFP memory, 6−44
  CFP VME interface, 6−44
  CFP−CALM interface, 6−44
  CINE CLC looping trigger, 6−44
  CINE memory, 6−45

CINE VME interface, 6−45
CINE XY and RGB capture/replay, 6−45
Color 2D path, 6−45
Color B−mode test pattern, 6−46
DICOM printer configuration, 6−46
Doppler audio tool 1, 6−46
DP audio self test, 6−46
DP components, 6−46
DP I/Q self test, 6−46
DP VME interface, 6−47
DP−TLM interface, 6−47
EQ ports and memory, 6−47
FECT control of TDs, 6−47
FECT memory and register, 6−47
Gray 2D path, 6−47
High voltage fault interrupts, 6−47
IQ comprehensive data path, 6−48
Kernel I&Q data bus, 6−48
M−mode gray path, 6−48
M−mode test pattern, 6−48
Noise floor, 6−48
PIA VME interface, 6−48
Probe control, 6−49
PW Doppler path, 6−49
SS com port 2, 6−49
SS components, 6−49
SS memory, 6−50
SS VME interface, 6−50
SS−DP interface, 6−50
System Timing scan control bus, 6−50
System Timing SCB−RxSYNC RAM, 6−50
System Timing TxSYNC and RxSYNC timing, 6−50
TD digital receive, 6−50
TD memory and register, 6−51
TGC Vref test, 6−51
TLM components, 6−51
TLM memory, 6−51
TLM VME memory, 6−51
Transmit 1, 6−51
Transmit 2, 6−51
VEQ TGC comprehensive, 6−52
VP components, 6−52
VP functional test tool, 6−52
VP memory, 6−52
VP VME interface, 6−53
XDIF wrapback, 6−53
XY functionality, 6−53
XY memory, 6−53
XY VME interface, 6−53

DICOM Option
Checking, 4−7
Network information needs, 2−10
User information needs, 2−11

Digital Archive Option, Checking, 4−7

Disinfecting, Probes, 10−13

DP, Functions, 5−15

Drip Pan, Renewal parts, 9−46, 9−48, 9−50

E

EMC
Compliance, 1− 16
Definition, 1− 16
Maintenance practices, 1− 16

EMC Shield, Renewal parts, 9−44

EMI
Definition, 1− 16
Limitations, 2−4
Prevention, 2−4

Encoder
Renewal parts, 9−16
Self test, 8−20

Error Log, 6−29

Error Window, 6−29

ESD
Anti−electrostatic vacuum, 1− 17
Definition, 1− 17
Prevention, 1− 17
Wrist strap, 1− 9

External Video Inputs, 6−5

F

Fan Assembly, Renewal parts, 9−24

Fan, Muffin, Renewal parts, 9−25

Footswitch, 9−65
Self test, 8−22

Front Wheel, Renewal parts, 9−54

Functional Check, Basic System, 4−9

Functional Checks, Options, 4−6

Fuses
Complement, 7−6
Location on MC/PIA, 7−7
Specifications, 7−6

G

Gas Spring
Checking, 8−4

Renewal parts, 9−52

Gas spring, Safety, 1− 8

gemsC
Description, 6−13
Diagnostics, 6−13
Logs, 6−28

gemsC Diagnostics
Diagnostic interface, 6−13
Establishing interface, 6−16
Exiting, 6−25
Function keys, 6−15
Looping subtests, 6−22
Minimum system, 6−13
Procedure summary, 6−14
Running tests, 6−23
Screen description, 6−20
Startup, 6−17
Status messages during test, 6−23
Test input choices, 6−21
Top level menu bar, 6−19
Viewing test results, 6−24

Grounding, Checking unit, 3−11

H

Handling, ESD prevention, 1− 17

Hard Drive
Checking power, 8−7
Renewal parts, 9−34

HV Cap Assembly, Renewal parts, 9−38

I

Icons
Product, 1− 5
Safety, 1− 3

Image
Affect of EMI, 8−11
Troubleshooting quality problems, 8−11

InSite Option, Checking, 4−7

Installation
Anchoring unit, 3−12
Check leakage current of peripherals, 3−17
Check leakage current of probes, 3−15
Checklist, final steps, 3−12
Checklist, grounding, 3−11
Checklist, option unpacking and installation, 3−12
Checklist, probe unpacking and installation, 3−12
Checklist, unit preparation, 3−9
Checklist, unpacking, 3−7
Facility inspection, 3−8
Receiving, 3−6
Test leakage current of unit, 3−13
Time required, 3−4
Tools required, 3−4
Unpacking, 3−6

J

Jumpers
BP, 7−22
Complement, 7−21
MOD, 7−23
SSR, 7−21, 7−22
Transformer, 3−10
XDIF2, 7−24

K

Kernel Subsystem, Function summary, 5−5

Key Cap, Checking for wobble, 8−4

Keyboard
Renewal parts, 9−16
Self test, 8−21

Kits, Renewal parts, 9−4, 9−57–9−66

L

Label, Rating plate, 3−9

Labels
Product, 1− 5
Rating plates, 1− 13

Leakage Current
Correcting, 3−19
Test peripherals for, 3−17
Test probes for, 3−15
Test unit for, 3−13

LED, Control panel self test, 8−19

LED Indicators
MC/PIA, 8−17, 8−18
SS, 8−16
Use for troubleshooting, 8−16
XY, 8−16

Lockout procedure, 1− 15

Log, Power up example, 6−32

Logs
Capture, gemsC, 6−24

Error, 6−29, 8−24
Power up, 6−32
System Configuration, 6−34
Temperature, 6−30
Temperature, example of, 6−31

Loopback
Description, 6−26
Part number, 9−65

M

Maintenance, Probes, 10−12

MC/PIA
Fuse location, 7−7
LED indicators, 8−18

Mechanical Index, 5−6

Message
BAD CHK, 6−39
MISSING, 6−39

Messages
Beep, 8−24
Boot up status, 4−3
Error on monitor, 8−24
Error, lists and meaning of, 8−25–8−36
Temperature related, 6−31
Warning on monitor, 8−24

Mid Processor Subsystem, Function summary, 5−5

MOD
Checking power, 8−7
Disk ejection, 4−4
Disk handling and storage, 10−9
Disk installation, 4−4
Drive cleaning, 10−9
Jumpers, 7−23
Renewal parts, 9−34

MOD Disks
Recycling, 4−5
Reformatting, 4−5

Mode
Application, 8−24
Disruptive, 8−24

Monitor
Brightness adjustment, 8−10
Checking operation, 8−8
Checking tilt, 8−3
Cleaning, 10−9
Overheating, prevention, 1− 8
Removal, 7−20
Renewal parts, 9−8
Troubleshooting, 8−8
Video connections, 8−9
Weight, 7−20

N

Noise Floor, Test, 6−59

O

Operator Panel
Checking, 8−4
Removal, 7−16
Self test, 8−19
Switch self test, 8−22

OPI/CPU
Functions, 5−18
Renewal parts, 9−16

P

Packing, Circuit card, 9−66

Painting, 10−4

Power Cord, Visual Check, 10−9

Power On, Description, 4−3

Power Outlet, Testing, 3−8

Power Subsystem, Voltage monitoring, 5−27

Power Supplies
Access, 7−11
Checking outputs, 8−5
Cleaning, 10−10
PS1 control signals, 5−22
PS1 description, 5−21
PS1 power distribution, 5−23, 5−25
PS1 protection, 5−21, 5−24
PS1 specifications, 5−21, 5−24
PS2 control signals, 5−25
PS2 description, 5−24
PS2 power distribution (V3), 5−26
Removal, 7−11
Renewal parts, 9−26, 9−28
Troubleshooting, 8−5
Visual check, 10−9
Wiring, 7−12

Power System
AC input, 5−19
AC outlets, 5−19
Description, 5−19
Diagram, block, 5−20

Soft start feature, 5−19

Presets
Archiving procedure, 4−4
Using archived, 4−5

Preventive Maintenance
Checks and cleaning, 10−8
Diagnostic checks, 10−11
Filter cleaning, 10−10
Preliminary checks, 10−5
Records, 10−3
Safety precautions, 10−2
Schedule, 10−3
System checks, 10−6
Tool needs, 10−4

Probes
cleaning, *10−14*
specialty probes, *10−16*
Cleaning/sterilization, 10−13
ID codes, 6−39
Physical care, 10−12
Power monitor points on XDIF, 5−29
Renewal parts, 9−5
safety, disinfecting, *10−16*
Safety, electrical, 10−13
Specifications, 6−39

R

Rating Plates, Location, 6−64

Rear Wheel, Renewal parts, 9−46, 9−48, 9−50

Removal
Air filter, 7−3
Audio components, 7−13
Bumpers, 7−5
Cover, front, 7−4
Cover, rear, 7−3
Cover, side, 7−3
Monitor, 7−20
Operator panel, 7−16
Power Supplies, 7−11
RF cables, 7−14
Tasklight, 7−19

Renewal Parts, 9−2
AC power, 9−38–9−52
Frame, 9−46–9−56
Front covers, XDIF and operator panel, 9−10–9−20
Hard Drive and MOD, 9−34
Kits, 9−57–9−59
Rear bumper, power supplies and bulkhead, 9−26–9−34
RF shields and gaskets, 9−44
Side covers, rear covers, and monitor, 9−6–9−10
Software, 9−56
Temperature sensors, 9−36

Renewal parts, Probes, 9−5

RF Gaskets, Proper use, 2−4

S

Safety
Blood borne diseases, 1− 7
Extension cords, 1− 9
Gas spring, 1− 8
Inclines, 1− 8
Lockout/tagout procedure, 1− 15
Moving unit, 1− 8
Neurological diseases, 1− 7
Precautions, 1− 3
Probe damage, 1− 8
Rasing unit, 1− 8
Wrist strap, 1− 9

Scan Converter Subsystem, Function summary, 5−5

Seismic Anchors, 3−12

Service Key, Part number, 9−65

Shipment
Damaged, 3−6
Incomplete, 3−6

Site Preparation
Cooling requirements, 2−8
Dedicated circuit breaker, 2−9
DICOM network information needs, 2−10
EMI Prevention, 2−4
Facility floor plans, 2−7
Floor materials, 2−5
Lighting requirements, 2−8
Power outlets, 2−9
Power stability, 2−9
Time and manpower, 2−2

Size, system, 2−2

Software
Loading, 6−60
Renewal parts, 9−56

Speaker, Renewal parts, 9−46, 9−48, 9−50

Specifications
Acoustic noise output, 2−3
Electrical power input, 2−9
Floor load, 2−3
Inrush current, 2−9
Power stability requirements, 2−9
PS1 power supply, 5−21, 5−24
Size, 2−2

Weight, 2−2

SSR
Configurations, 7−9
Jumpers, 7−21, 7−22
Location, 7−9

SW1 Board, Renewal parts, 9−14

SW2 Board, Renewal parts, 9−14

SW3 Board, Renewal parts, 9−16

T

Tagout procedure, 1− 15

Tasklight, Removal, 7−19

Temperature, Monitoring description, 6−30

Temperatures
Sensing circuit diagram, 6−30
Sensor locations, 6−30
Sensor renewal parts, 9−36

Test
External Video Inputs, 6−5
Video Test Patterns, 6−7
Visual channel alive, 6−3

TGC
Functions, 5−18
Renewal parts, 9−14
Self test of pots, 8−19

Thermal Index, 5−6

TLM, Functions, 5−16

Tools
Service, kit contents, 9−65
Software service, 6−2

Trackball
Renewal parts, 9−16
Self test, 8−20

Transformer
Access, 7−10
Renewal parts, 9−38
Wiring, 3−9

Transporting, Unit, 3−20

Troubleshooting
Basic checks, 6−2
General procedures, 8−2
Hangs, 8−2
Hints, 6−67
Leakage current, 3−19
LED indicators, using, 8−16
Monitor, 8−8
Noisy images, 2−4
Overtemperature problems, 8−2
RF test failures, 6−53
Shutdowns, 8−2

U

Upper OPI Panel, Renewal parts, 9−12

V

VFD
Function, 5−18
Renewal parts, 9−14
Self test, 8−19

Video Outputs, Checking, 8−12

Video Test Patterns, 6−7

Visual Channel Alive, 6−3

VP, Functions, 5−16

W

Weight, Monitor, 7−20

Weight, system, 2−2

Wrist Strap
Precautions, 3−5
Usage, 1− 17

X

XDIF, Renewal parts, 9−10

XDIF2, Jumpers, 7−24

XY, Functions, 5−16