SERVICE MANUAL

Power Column

From Hill-Rom

Product No. P950E

For Parts Or Technical Assistance **man042ra**
USA (800) 445-3720 Canada (800) 267-2337
International: Contact your distributor.

Power Column Service Manual

Revisions

Revision Letter	Pages Affected	Date
Original Issue		August 1985
A	All	August 1998

man042ra

COPYRIGHT© 1998 HILL-ROM, INC.

All rights reserved. No part of this text shall be reproduced or transmitted in any form or by any means, electronic or mechanical, including photocopying, recording, or by any information or retrieval system without written permission from HILL-ROM, INC. (Hill-Rom).

Second Edition

First Printing 1998

Printed in the USA

Allied™ is a trademark of Allied Signal Inc.

Bird® is a registered trademark of Bird Products Corporation.

Decora® is a registered trademark of Leviton Manufacturing Co., Inc.

COMposer® is a registered trademark of Hill-Rom, Inc.

Hill-Rom® is a trademark of Hill-Rom, Inc.

Hubbellock® is a registered trademark of Hubbell Incorporated.

Oxequip™ is a trademark of Allied Healthcare Products, Inc.

SideCom® is a registered trademark of Hill-Rom, Inc.

Stabilet® is a registered trademark of Hill-Rom, Inc.

The information contained in this manual is subject to change without notice. Hill-Rom makes no commitment to update or keep current, the information contained in this manual.

The only product warranty intended by Hill-Rom is the express, written warranty accompanying the bill of sale to the original purchaser. Hill-Rom makes no other warranty, express or implied, and in particular, makes no warranty of merchantability or fitness for a particular purpose.

Additional copies of this manual can be obtained from Hill-Rom.

Table of Contents

Chapter 1: Introduction

Purpose . . . . . 1 - 3
Audience . . . . . 1 - 3
Organization . . . . . 1 - 3
Chapter 1: Introduction . . . . . 1 - 3
Chapter 2: Troubleshooting Procedures . . . . . 1 - 3
Chapter 3: Theory of Operation . . . . . 1 - 3
Chapter 4: Removal, Replacement, and Adjustment Procedures . . . . . 1 - 3
Chapter 5: Parts List . . . . . 1 - 4
Chapter 6: General Procedures . . . . . 1 - 4
Chapter 7: Accessories . . . . . 1 - 4
Typographical Conventions . . . . . 1 - 5
Introduction . . . . . 1 - 6
System Features . . . . . 1 - 7
Specifications . . . . . 1 - 8
Physical Description . . . . . 1 - 8
Electrical Description . . . . . 1 - 10
Regulations, Standards, and Codes . . . . . 1 - 12
UL Classification . . . . . 1 - 12
Model Identification . . . . . 1 - 13
Safety Tips . . . . . 1 - 14
Warning and Caution Labels . . . . . 1 - 16

Chapter 2: Troubleshooting Procedures

Getting Started . . . . . 2 - 2
Initial Actions . . . . . 2 - 2
Function Checks . . . . . 2 - 3
Final Actions . . . . . 2 - 4

Chart Light Does Not Come On . . . . . 2 - 5
Night Light Does Not Come On . . . . . 2 - 8
Arm Light Does Not Come On . . . . . 2 - 9
Exam Light Does Not Come On . . . . . 2 - 10
STAT Clock/Timer Will Not Operate . . . . . 2 - 11
The Line Isolation Monitor (LIM) Alarm Sounds . . . . . 2 - 13
Standard or Emergency Electrical Receptacle Is Inoperative . . . . . 2 - 14
Line Voltage Switch Will Not Operate the Attached Device . . . . . 2 - 15
Timed Light Switch or Toggle Switch Does Not Operate Properly . . . . . 2 - 17
Dimmer Switch Will Not Operate the Light . . . . . 2 - 19
Power Column Circuit Breaker Is Inoperative . . . . . 2 - 21

Chapter 3: Theory of Operation

Electrical System . . . . . 3 - 3
Theory of Operation . . . . . 3 - 7
Main Junction Box . . . . . 3 - 7
Standard Power . . . . . 3 - 7
Circuit Breaker Panel . . . . . 3 - 7
Circuit Breakers . . . . . 3 - 7
Isolation (Emergency) Power . . . . . 3 - 8
Medical Gases/Vacuum . . . . . 3 - 8
Communications . . . . . 3 - 8

Chapter 4: Removal, Replacement, and Adjustment Procedures

Electrical Receptacle . . . . . 4 - 3
Removal . . . . . 4 - 3
Replacement . . . . . 4 - 6
Ground Receptacle . . . . . 4 - 7
Removal . . . . . 4 - 7
Replacement . . . . . 4 - 9
Dimmer Switch . . . . . 4 - 10
Removal . . . . . 4 - 10
Replacement . . . . . 4 - 11

Line Voltage Switch . . . . . 4 - 12
Removal . . . . . 4 - 12
Replacement . . . . . 4 - 13
Telemate Receptacle . . . . . 4 - 14
Removal . . . . . 4 - 14
Replacement . . . . . 4 - 14
Timed Light Switch and Toggle Switch . . . . . 4 - 16
Removal . . . . . 4 - 16
Replacement . . . . . 4 - 17
Adjustment . . . . . 4 - 18
Chart Light or Night Light Switch . . . . . 4 - 19
Removal . . . . . 4 - 19
Replacement . . . . . 4 - 20
Chart Light or Night Light Bulb . . . . . 4 - 21
Removal . . . . . 4 - 21
Replacement . . . . . 4 - 22
STAT Clock/Timer . . . . . 4 - 23
Removal . . . . . 4 - 23
Replacement . . . . . 4 - 24
Line Isolation Monitor . . . . . 4 - 25
Removal . . . . . 4 - 25
Replacement . . . . . 4 - 27
Circuit Breaker . . . . . 4 - 28
Removal . . . . . 4 - 28
Replacement . . . . . 4 - 29
Low Voltage Controller . . . . . 4 - 30
Removal . . . . . 4 - 30
Replacement . . . . . 4 - 32
Shroud Assembly . . . . . 4 - 33
Removal . . . . . 4 - 33
Replacement . . . . . 4 - 35

Ceiling Ring . . . . . 4 - 36
Removal . . . . . 4 - 36
Replacement . . . . . 4 - 38
Front and Rear Laminate/Steel Panels . . . . . 4 - 39
Removal . . . . . 4 - 39
Replacement . . . . . 4 - 39
Side Laminate/Steel Panels. . . . . 4 - 41
Removal . . . . . 4 - 41
Replacement . . . . . 4 - 41
Chapter 5: Parts List
Warranty . . . . . 5 - 5
Service Parts Ordering . . . . . 5 - 7
Exchange Policy . . . . . 5 - 9
In-Warranty Exchanges . . . . . 5 - 9
Out-of-Warranty Exchanges . . . . . 5 - 9
Recommended Spare Parts . . . . . 5 - 10
Shop Drawings . . . . . 5 - 10
Basic Power Column, Grounded Power . . . . . 5 - 12
Basic Power Column, Isolated Power. . . . . 5 - 16
Ceiling Ring . . . . . 5 - 20
Shroud Assembly . . . . . 5 - 22
Single-gang Horizontal Channel. . . . . 5 - 28
Multi-gang Horizontal Channel . . . . . 5 - 30
Conduit Tiedown . . . . . 5 - 32
High Pressure Laminate/Steel Panels . . . . . 5 - 34
Base Cove Molding . . . . . 5 - 36
Monitor Mount . . . . . 5 - 38
Monitor Mount, 25" (63.5 cm). . . . . 5 - 40
STAT Clock/Timer Mount Provision . . . . . 5 - 42
Universal Gas Outlet Assembly . . . . . 5 - 44
Ohio Gas Outlet . . . . . 5 - 50

Allied Gas Outlet . . . . . 5 - 52
Oxequip Gas Outlet . . . . . 5 - 54
Nurse Call Provision . . . . . 5 - 56
Phone Provision . . . . . 5 - 58
Additional Ground Tie Point . . . . . 5 - 60
Fixed Bottle Slide . . . . . 5 - 62
SideCom Communication System Receptacle (37 Pin) . . . . . 5 - 64
SideCom Communication System Receptacle . . . . . 5 - 66
COMposer Communication System Bed Interface Unit . . . . . 5 - 68
One Gang Bed Interface Unit . . . . . 5 - 70
Timed Light Switch . . . . . 5 - 72
Telemate Receptacle . . . . . 5 - 74
Isolation Transformer . . . . . 5 - 76
Low Voltage Controller . . . . . 5 - 78
Low Voltage Switch . . . . . 5 - 80
Line Isolation Monitor . . . . . 5 - 82
Simplex and Hubbellock Outlet Receptacle . . . . . 5 - 84
Duplex Outlet Receptacle . . . . . 5 - 86
Double Simplex Outlet Receptacle . . . . . 5 - 88
Double Duplex Outlet Receptacle . . . . . 5 - 90
Ground Receptacle . . . . . 5 - 94
Line Voltage Switch . . . . . 5 - 96
Timed/Toggle Switch . . . . . 5 - 98
Conversion Kit, P991-00 Monitor Mount-P651C991 . . . . . 5 - 100
Pivoting Storage Basket-Shallow-P951S03 and Pivoting Waste Basket,
Deep-P951W03 102
Basket, Large-P952L01 and Small Storage Basket-P952S01 104
Bottle Guard Bumper-P953-00 106
Floor Mounted Bed Locator-P958-00 108
Incandescent/Fluorescent Arm Lamp-P963C02 110
Mount, Arm Light-M670E2511 and P963M00 112

STAT Clock/Timer Pod Mounted-P964B-00 114
Mount Assembly-Exam Plus Light-P965M01 116
Universal Holder, Multipoint-P970A01 118
Bird Blender Mount-P973-B1 120
Utility Light-Track Mounted-P966A00 122
Sphygmomanometer Bracket, Aneroid-P975-01 124
Utility/Bottle Slide Mount-P973-01 126
Opthalmoscope Mount-P973-S1 128
Utility Mount, Short Post-P972-01 and Long Post-P972L01 130
Sphygmomanometer Mount, Mercurial-P974-01 132
Infusion Pump/IV Holder-P984-00 134
Swivel Shelf, Stabilet Freestanding Infant Warmer-P986S01 136
Resuscitator Bag Holder-P1022PH 138
Circuit Breaker Panel 140
Night/Chart Light 144
Electrical Device Backbox 146

Chapter 6: General Procedures

Cleaning and Care . . . . . 6 - 3
General Cleaning . . . . . 6 - 3
Steam Cleaning . . . . . 6 - 3
Hard to Clean Spots . . . . . 6 - 4
Accessories . . . . . 6 - 4
Disinfection . . . . . 6 - 4
Lubrication Requirements . . . . . 6 - 4
Preventive Maintenance . . . . . 6 - 4
Preventive Maintenance Schedule . . . . . 6 - 6
Preventive Maintenance Checklist . . . . . 6 - 7
Tool and Supply Requirements . . . . . 6 - 8
Installation and Post-Installation Inspection . . . . . 6 - 8

Chapter 7: Accessories

Monitor Mount Conversion Kit . . . . . 7 - 4

Installation . . . . . 7 - 4
Pivoting Storage Basket, Shallow and Pivoting Waste Basket, Deep . . . . . 7 - 6
Installation . . . . . 7 - 6
Large and Small Storage Basket . . . . . 7 - 8
Installation . . . . . 7 - 8
Floor Mounted Bed Locator . . . . . 7 - 10
Installation . . . . . 7 - 10
Arm Light Mount . . . . . 7 - 11
Installation . . . . . 7 - 11
Multipoint Universal Holder . . . . . 7 - 12
Installation . . . . . 7 - 12
STAT Clock/Timer Pod Mounted . . . . . 7 - 13
Installation . . . . . 7 - 13
Adjustable Shelf . . . . . 7 - 15
Installation . . . . . 7 - 15
Exam Plus Light Mount Assembly . . . . . 7 - 17
Installation . . . . . 7 - 17
Bird Blender Mount . . . . . 7 - 18
Installation . . . . . 7 - 18
Track Mounted Utility Light . . . . . 7 - 20
Installation . . . . . 7 - 20
Aneroid or Mercurial Sphygmomanometer Bracket . . . . . 7 - 21
Installation . . . . . 7 - 21
Utility/Bottle Side Mount . . . . . 7 - 22
Installation . . . . . 7 - 22
Opthalmoscope Mount . . . . . 7 - 24
Installation . . . . . 7 - 24
Short Post or Long Post Utility Mount . . . . . 7 - 26
Installation . . . . . 7 - 26
Infusion Pump/IV Holder . . . . . 7 - 28
Installation . . . . . 7 - 28

Stabilet Freestanding Infant Warmer Swivel Shelf . . . . . 7 - 30
Installation . . . . . 7 - 30
Resuscitator Bag Holder . . . . . 7 - 32
Installation . . . . . 7 - 32

1

Chapter 1
Introduction

Chapter Contents

Purpose . . . . . 1 - 3
Audience . . . . . 1 - 3
Organization . . . . . 1 - 3
Chapter 1: Introduction . . . . . 1 - 3
Chapter 2: Troubleshooting Procedures . . . . . 1 - 3
Chapter 3: Theory of Operation . . . . . 1 - 3
Chapter 4: Removal, Replacement, and Adjustment Procedures . . . . . 1 - 3
Chapter 5: Parts List . . . . . 1 - 4
Chapter 6: General Procedures . . . . . 1 - 4
Chapter 7: Accessories . . . . . 1 - 4
Typographical Conventions . . . . . 1 - 5
Introduction . . . . . 1 - 6
System Features . . . . . 1 - 7
Specifications . . . . . 1 - 8
Physical Description . . . . . 1 - 8
Electrical Description . . . . . 1 - 10
Regulations, Standards, and Codes . . . . . 1 - 12
UL Classification . . . . . 1 - 12
Model Identification . . . . . 1 - 13
Safety Tips . . . . . 1 - 14
Warning and Caution Labels . . . . . 1 - 16

NOTES:

Purpose

This manual provides requirements for the Power Column normal operation and maintenance. It also includes a parts list (in chapter 5) for ordering replacement components.

Audience

This manual is intended for use by only facility-authorized maintenance personnel. Failure to observe this restriction can result in severe injury to people and serious damage to equipment.

Organization

This manual contains seven chapters.

Chapter 1: Introduction

In addition to a brief description of this service manual, chapter 1 also provides a product overview.

Chapter 2: Troubleshooting Procedures

Repair analysis procedures are contained in this chapter. These procedures are used to gather information, identify the maintenance need, and verify the effectiveness of the repair.

Chapter 3: Theory of Operation

This chapter describes the application of the mechanical and electrical systems employed in this product.

Chapter 4: Removal, Replacement, and Adjustment Procedures

Chapter 4 contains the detailed maintenance procedures determined necessary in chapter 2.

Chapter 5: Parts List

This chapter contains Hill-Rom's warranty, part-ordering procedure, and illustrated parts lists.

Chapter 6: General Procedures

Cleaning, preventive maintenance, and other general procedures are described in this chapter.

Chapter 7: Accessories

A list of additional products, that can be used in conjunction with the Power Column, is available in chapter 7. Installation procedures for these accessories are also included.

Typographical Conventions

This manual contains different typefaces and icons designed to improve readability and increase understanding of its content. Note the following examples:

- Standard text—used for regular information.
- **Boldface text**—emphasizes a word or phrase.
- **NOTE:**—sets apart special information or important instruction clarification.
- The symbol below highlights a WARNING or CAUTION:

Figure 1-1. Warning and Caution Symbol

  - A WARNING identifies situations or actions that may affect patient or user safety. Disregarding a warning could result in patient or user injury.
  - A CAUTION points out special procedures or precautions that personnel must follow to avoid equipment damage.
- The symbol below highlights an electrical shock hazard WARNING:

Figure 1-2. Electrical Shock Hazard Warning

Introduction

See figure 1-3 on page 1-6 for location of the Power Column major components.

Figure 1-3. Power Column

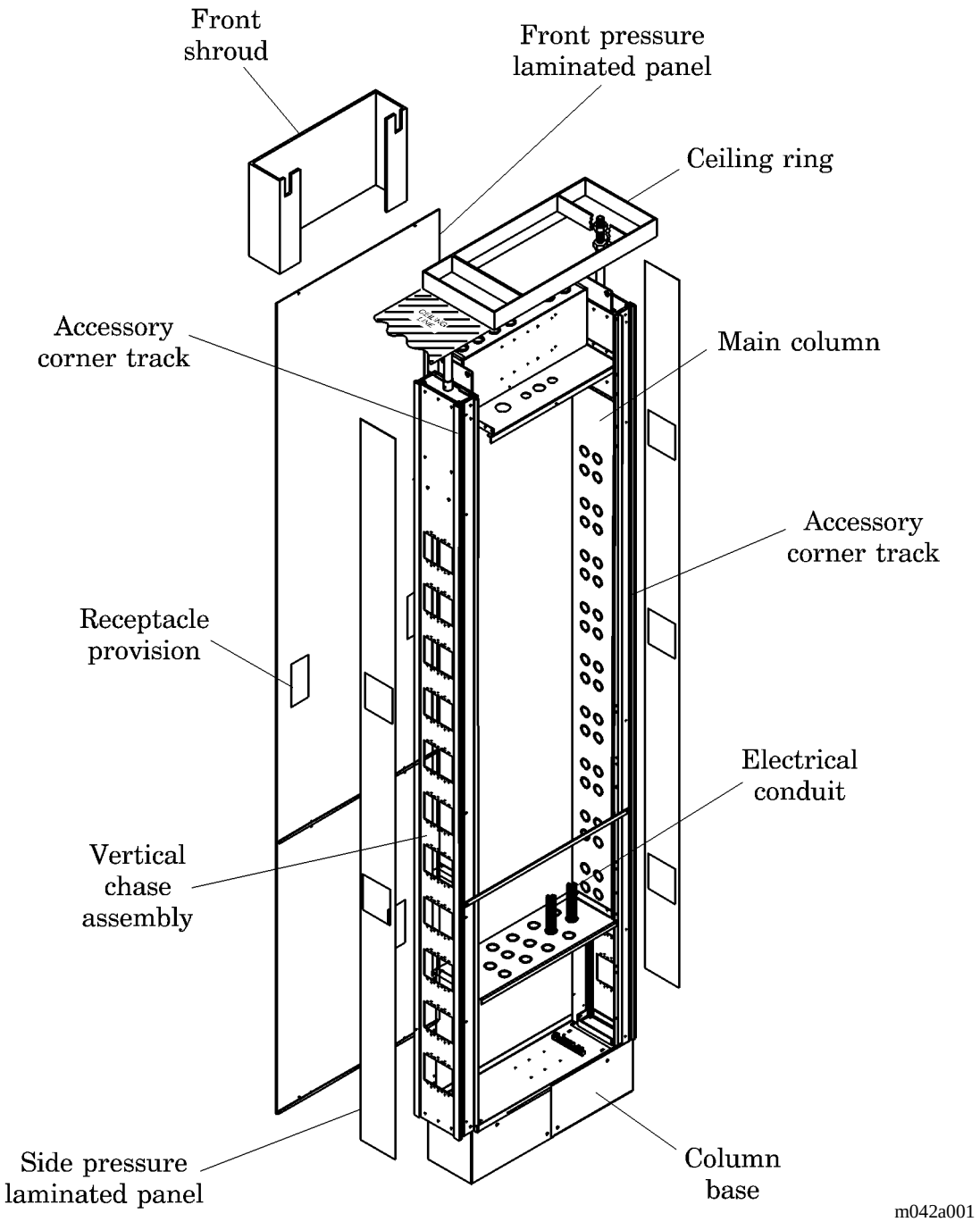

The Power Column is a modular system providing a clean, uncluttered, and organized environment. Every Power Column system is custom designed to address specific architectural and patient care requirements. As a system, it provides a network of patient care services that works together with secondary equipment and accessories.

The Power Column “zones” services for maximum nursing productivity and patient safety. All services integrated into the column are separated by function and organized into distinct zones permitting total 360° patient access.

The Power Column consists of a main column encased with high pressure laminated panels and four aluminum accessory tracks. The area under the laminated panels contains power lines and piping for medical gases. The tracks are located on each corner and run the entire length of the column. All accessories can be conveniently attached and secured using any of the four, full-length accessory tracks.

System Features

The Power Column features include:

- Low voltage, normal, and emergency power services
- Electrical power outlets
- A reliable grounding system
- Multiple variable gas outlets
- Staff equipment lighting
- Emergency code button provision
- Nurse call provision
- Support and hook-up provision for monitoring equipment
- Adjustable mounting for patient diagnostic and treatment equipment
- Patient bed positioner
- Consumable materials and equipment storage
- Adaptability for new services without the need to break into walls or reconstruct the room

Specifications

Physical Description

The following tables contain specifications of the Power Column.

Table 1-1. Specifications

Feature	Dimension
Main column body	
Depth	7" (18 cm)
Width	23 1/8" (58.74 cm)
Column base	
Depth	7" (18 cm)
Width	22" (56 cm)
Column shroud (top)	
Depth	10 1/2" (26.67 cm)
Width	23 1/4" (59.06 cm)
Overall column height	
Minimum	96" (244 cm)
Maximum	114" (290 cm)
Ceiling mounting ring	9 1/8" x 21 1/2" (23.18 cm x 54.61 cm)
Ceiling mounting ring load support*	
Dead load	200 lb (91 kg)
Horizontal impact	600 lb (272 kg), maximum deflection of 1/16" (.16 mm)
Upward compressive force	300 lb (136 kg), maximum deflection of 1/16" (.16 mm)

* In seismic code area, contact Hill-Rom for additional information concerning suspension method.

Table 1-2. Medical Gas/Vacuum Manifold

Description	Specification
Check valves	DISS indexed
Copper tubing	Type K, ASTM-B819
Gas tubing–outer diameter	
Single outlets	3/8" (.95 cm)
Multiple outlets	1/2" (1.27 cm) to 5/8" (1.59 cm)
Vacuum tubing–outer diameter	
Multiple outlets	3/4" (1.91 cm) to 7/8" (2.22 cm)
Brazing	Silver alloy
Minimum melting point–brazing	1000°F (538°C)
Pressure test	150 psi (1034 kPa)
Pressure test certification	NFPA-99 and/or contractual documents

Table 1-3. Optional Equipment and Devices

Description	Specification
Night light	Switched or continuous burn 7 W/120V bulb
Chart light	Switched or continuous burn 7 W/120V bulb
Incandescent/fluorescent arm light	Up to 60 W, medium screw base, incandescent bulb. 22 W, 8" diameter, type T9, circuline fluorescent bulb
Exam light	150 W, P25/10 type, incandescent bulb
Clock/elapsed timer	0.32 ma fuse, self-test mode for troubleshooting
Low voltage controller	120V AC 240V AC 277V AC
Isolation transformer	3 KVA or 5 KVA 120, 208, 240, or 277 Volts

Table 1-4. Option Provisions

Description	Specification
Nurse call station	2 through 8 gang opening. Contractor provides name and number of equipment to be used.
Telephone	Single gang opening. Contractor provides telephone jack, wiring, and faceplate punching.
TeleMate receptacle	Modular telephone jack wired with four conductor station. Faceplate punched and installed.
Emergency code button	Contractor provides name and number of emergency code equipment to be used.

Electrical Description

Table 1-5. Electrical Specifications

Description	Specification
Voltage	
Single phase, two wire (feed)	120V AC at 30 or 50 A
Single phase, three wire (feed)	120/240V AC at 30 or 50 A
Three phase, four wire (feed)	120/208V AC at 30 or 50 A
Wire–standard and emergency power (critical branch) circuits	12 AWG, stranded copper, 600V, type AWM, (type XHHW for isolation power), color-coded per wiring diagram
Wire–receptacle ground conductor	12 AWG, stranded copper, green
Wire–internal tie point to ground bar	6 AWG
Wire–ground bar	4 AWG or smaller building service ground wire
Grounding and bonding	Each receptacle must have a ground conductor terminated to the ground tie point and ground bar.

Table 1-6. Receptacle Specifications

Description	Specification
Single receptacle	Hospital grade, NEMA 5-15R or 5-20R, 120V AC, 15 or 20 A, ivory = standard power, red = emergency power (critical branch)
Duplex receptacle	Hospital grade, NEMA 5-15R or 5-20R, 120V AC, 15 or 20 A, ivory = standard power, red = emergency power (critical branch)
Locking receptacle	Single type, Hubbellock 23000 HG, 125V AC, 20 A, black
Isolated ground receptacle	Duplex type, NEMA 5-20R, 120V AC, 20 A, orange
Grounding receptacle	H Aton SLR-3S, ground conductor = (10 AWG, stranded copper, green)
Monitor power receptacle	Hospital grade, single type, 125V AC, 20 A

Table 1-7. Switch Specifications

Description	Specification
SPST switch	120/277V AC, 20 A, quiet action, ivory
3-way switch	120/277V AC, 20 A, quiet action, ivory
Timed light switch	Adjustable electronic timer, 20 A, ivory, rated for 600 W incandescent/300 W fluorescent
Dimmer switch	Full range, 120V AC, SPST, rated for 600 W incandescent, ivory, 1 1/2" (38 mm) diameter control knob

Regulations, Standards, and Codes

UL Classification

Sections and Units

Category guide designation = QQXX

Isolated Power Column Modules

Category guide designation = KEXS

Model Identification

See table 1-8 on page 1-13 for Power Column model identification.

Table 1-8. Model Identification

Model Number	Description
P950E	Power Column

Safety Tips

WARNING:
Only facility-authorized maintenance personnel should troubleshoot the Power Column. Troubleshooting by unauthorized personnel could result in personal injury or equipment damage.

WARNING:
Only facility-authorized maintenance personnel should perform preventive maintenance on the Power Column. Preventive maintenance performed by unauthorized personnel could result in personal injury or equipment damage.

WARNING:
Follow the product manufacturer’s lubrication instructions. Failure to do so could result in personal injury or equipment damage.

WARNING:
Shut of the medical gas supply, and tag out the valve, prior to performing any gas system maintenance. Failure to do so could result in a fire or explosion. Personal injury or equipment damage could occur.

WARNING:
Ensure that the gas demand valve matches the gas manifold port (oxygen to oxygen, air to air, vacuum to vacuum, nitrous oxide to nitrous oxide). Failure to do so could result in a fire or explosion during subsequent use of the gas system. Personal injury or equipment damage could occur.

WARNING:
Provide additional support for the power column, during removal of the ceiling ring, to prevent movement. Personal injury or equipment damage could occur.

WARNING:
Hold any unsecured laminate/steel panels in place before removing the corner tracks. Once the corner tracks are removed these panels could fall. Personal injury or equipment damage could occur.

SHOCK HAZARD:
This unit is equipped with line voltage wiring and devices inside. This creates a potential electrical shock hazard when the unit is opened and repair work is being done. Therefore, only facility-authorized maintenance personnel should attempt to repair the unit. Repairs attempted by unauthorized personnel could result in personal injury or equipment damage.

SHOCK HAZARD:
Do not expose the unit to excessive moisture. Personal injury or equipment damage could occur.

SHOCK HAZARD:
Use care when checking live voltages. Do not touch live terminals, wire, and ground. Failure to use caution will cause serious electrical shock injury.

SHOCK HAZARD:
To minimize the risk of electrical shock or damage to the equipment, disconnect all electrical power to the system before working on it. Failure to do so could result in personal injury or equipment damage.

CAUTION:
Do not use harsh cleaners, solvents, or detergents. Equipment damage could occur.

Warning and Caution Labels

Figure 1-4. Warning and Caution Labels

WARNING

PRECAUTIONS MUST BE TAKEN WHEN SWEATING JOINTS TO PROTECT CHECK VALVES FROM EXCESSIVE HEAT. WHEN MAKING CONNECTORS CLOSER THAN 10" FROM "T" FITTING A HEAT SINK SHOULD BE USED TO PROTECT THE VALVE.

ATTENTION: MAXIMUM FLOW 8 SCFM @ 80 PSI
FLOWING OXYGEN OUTLETS AT ABOVE NORMAL PRESSURES MAY CAUSE THE SEAL TO BE DISPLACED FROM THEIR SEATS.
RELEASE TEST PRESSURES BEFORE CONNECTING DEVICES

WARNING: MORE THAN ONE LIVE CIRCUIT
AVERTISSMENT: PLUS D'UN CIRCUIT SOUS TENSION

CAUTION: THE MAIN BREAKER MAY NOT DISCONNECT ALL POWER SOURCES FROM THIS UNIT.

CIRCUIT	FUNCTION
	SPARE
	SPARE
	SPARE
	SPARE
	SPARE

CIRCUIT	FUNCTION
	SPARE
	SPARE
	SPARE
	SPARE
	SPARE

CURRENT INTERRUPTING RATING MAX RMS SYM 10.00 AMPS
120/240 VOLTS AC

m042a099

Chapter 2
Troubleshooting Procedures

2

Chapter Contents

Getting Started . . . . . 2 - 2
Initial Actions . . . . . 2 - 2
Function Checks . . . . . 2 - 3
Final Actions . . . . . 2 - 4
Chart Light Does Not Come On . . . . . 2 - 5
Night Light Does Not Come On . . . . . 2 - 8
Arm Light Does Not Come On . . . . . 2 - 9
Exam Light Does Not Come On . . . . . 2 - 10
STAT Clock/Timer Will Not Operate . . . . . 2 - 11
The Line Isolation Monitor (LIM) Alarm Sounds . . . . . 2 - 13
Standard or Emergency Electrical Receptacle Is Inoperative . . . . . 2 - 14
Line Voltage Switch Will Not Operate the Attached Device . . . . . 2 - 15
Timed Light Switch or Toggle Switch Does Not Operate Properly . . . . . 2 - 17
Dimmer Switch Will Not Operate the Light . . . . . 2 - 19
Power Column Circuit Breaker Is Inoperative . . . . . 2 - 21

Getting Started

2

WARNING:
Only facility-authorized maintenance personnel should troubleshoot the Power Column. Troubleshooting by unauthorized personnel could result in personal injury or equipment damage.

Begin each procedure in this chapter with step 1. Follow the sequence outlined (each step assumes the previous step has been completed). In each step, the normal operation of the product can be confirmed by answering **Yes** or **No** to the statement. Your response will lead to another step in the procedure, a repair analysis procedure (RAP), or a component replacement. If more than one component is listed, replace them in the given order.

Start with **Initial Actions** to begin gathering information about the problem.

Perform the **Function Checks** to isolate or identify a problem and to verify the repair after completing each corrective action (replacing or adjusting a part, seating a connector, etc.).

Perform the **Final Actions** after the Function Checks to verify the repair.

If troubleshooting procedures do not isolate the problem, call Hill-Rom Technical Support at (800) 445-3720 for assistance.

Initial Actions

Use Initial Actions to gather information from operators concerning problems with the Power Column. Note symptoms or other information concerning the problem that the operator describes. This information helps identify the probable cause.

1. Someone who can explain the problem is available.

   Yes **No**
   ↓ → Go to “Function Checks” on page 2-3.

2. Ask that person to demonstrate or explain the problem. The problem can be duplicated.

   Yes **No**
   ↓ → Go to “Function Checks” on page 2-3.

3. The problem is a result of improper operator action.

   Yes **No**
   ↓ → Go to “Function Checks” on page 2-3.

4. Instruct the operator to refer to the procedures in the *Power Column Users Manual*. Perform the “Function Checks” on page 2-3 to ensure proper operation of the Power Column.

Function Checks

1. Initial Actions have been performed.

   Yes **No**
   ↓ → Go to “Initial Actions” on page 2-2.

2. Power is applied to the Power Column.

   Yes **No**
   ↓ → Check the building circuit breaker panel, and ensure that the applicable circuit breaker is in ON position.

3. Auxiliary hospital equipment is plugged into an appropriate power source, and the switch is turned on.

   Yes **No**
   ↓ → Plug the unit into an appropriate power source, and turn on the switch.

4. The chart light is operational.

   Yes **No**
   ↓ → Go to RAP 2.1.

5. The night light is operational.

   Yes **No**
   ↓ → Go to RAP 2.2.

6. The arm light is operational.

   Yes **No**
   ↓ → Go to RAP 2.3.

7. The exam light is operational.

   Yes **No**
   ↓ → Go to RAP 2.4.

2

8. The STAT Clock/Timer is operational.

Yes	No
↓	→ Go to RAP 2.5.

9. The line isolation monitor (LIM) is operational.

Yes	No
↓	→ Go to RAP 2.6.

10. The electrical receptacle is operational.

Yes	No
↓	→ Go to RAP 2.7.

11. The line voltage switch operates correctly.

Yes	No
↓	→ Go to RAP 2.8.

12. The timed light switch or toggle switch operates correctly.

Yes	No
↓	→ Go to RAP 2.9.

13. The dimmer switch operates correctly.

Yes	No
↓	→ Go to RAP 2.10.

14. The Power Column circuit breaker is operative.

Yes	No
↓	→ Go to RAP 2.11.

15. Go to “Final Actions” on page 2-4.

Final Actions

1. Complete the required preventive maintenance procedures. See “Preventive Maintenance Checklist” on page 6-7.

2. Complete all required administration tasks.

2.1 Chart Light Does Not Come On

SHOCK HAZARD:
Use care when checking live voltages. Do not touch live terminals, wires, and ground. Failure to use caution will cause serious electrical shock injury.

1. The chart light malfunctions after performing the following procedure: Replace the bulb. See “Chart Light or Night Light Bulb” on page 4-21.

   Yes ↓ **No** → Go to “Final Actions” on page 2-4.

NOTE:
The voltage of the Power Column differs depending on the option selected.

2. A voltage reading of either 120V AC, 240V AC, or 208V AC is available between the lug and the building circuit breaker terminal.

   Yes ↓ **No** → Replace the building circuit breaker (A) per the manufacturer’s instruction (see figure 2-1 on page 2-5).

Figure 2-1. Standard or Emergency Building Circuit Breaker Box

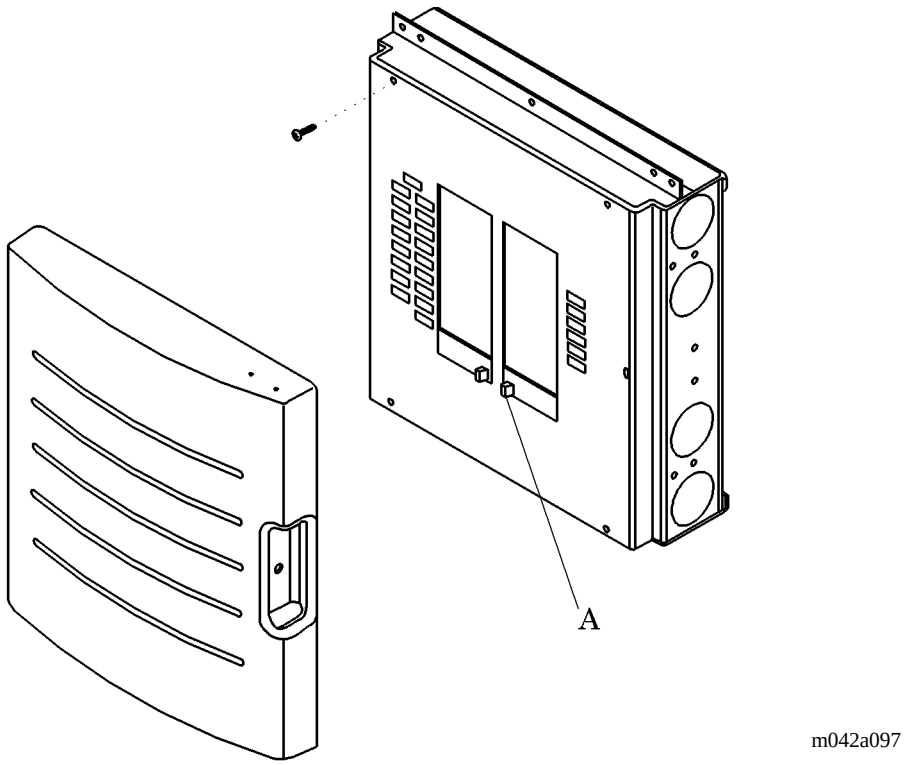

2

3. The Power Column circuit breaker (A) is in the ON position (see figure 2-2 on page 2-6).

   Yes ↓ **No** → Reset the Power Column circuit breaker to the ON position.

Figure 2-2. Power Column Circuit Breaker Panel

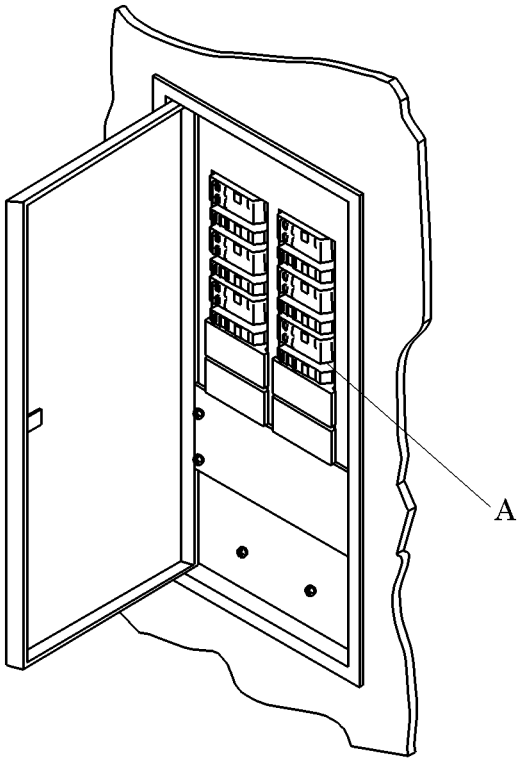

4. A voltage reading of either 120V AC, 240V AC, or 208V AC is available between the lug and the Power Column breaker terminal.

   Yes ↓ **No** → Replace the Power Column circuit breaker. See “Circuit Breaker” on page 4-28.

5. A voltage reading of either 120V AC, 240V AC, or 208V AC is available at the wire terminals on the chart light switch.

   Yes ↓ **No** → Repair or replace the wiring between the circuit breaker and the chart light switch.

6. Continuity in the chart light switch is present when checked as follows:

   a. Set the involved Power Column breaker to the OFF position.

b. Remove the chart light switch from the Power Column. See “Chart Light or Night Light Switch” on page 4-19.

c. Disconnect the wires.

d. The ohmmeter reads continuity between the chart light switch and the terminals.

Yes ↓

No → Replace the chart light switch. See “Chart Light or Night Light Switch” on page 4-19.

7. Go to “Final Actions” on page 2-4.

2.2 Night Light Does Not Come On

2

SHOCK HAZARD:
Use care when checking live voltages. Do not touch live terminals, wires, and ground. Failure to use caution will cause serious electrical shock injury.

1. The night light malfunctions after performing the following procedure: Replace the bulb. See “Chart Light or Night Light Bulb” on page 4-21.

   Yes **No**
   ↓ → Go to “Final Actions” on page 2-4.

NOTE:
The voltage of the Power Column differs depending on the option selected.

2. A voltage reading of either 120V AC, 240V AC, or 208V AC is available between the lug and the building circuit breaker terminal.

   Yes **No**
   ↓ → Replace the building circuit breaker (A) per the manufacturer’s instruction (see figure 2-1 on page 2-5).

3. The Power Column circuit breaker (A) is in the ON position (see figure 2-2 on page 2-6).

   Yes **No**
   ↓ → Reset the Power Column circuit breaker to the ON position.

4. A voltage reading of either 120V AC, 240V AC, or 208V AC is available between the lug and the Power Column breaker terminal.

   Yes **No**
   ↓ → Replace the Power Column circuit breaker. See “Circuit Breaker” on page 4-28.

5. A voltage reading of either 120V AC, 240V AC, or 208V AC is available at the wire terminals on the night light.

   Yes **No**
   ↓ → Repair or replace the wiring between the circuit breaker and the night light.

6. Go to “Final Actions” on page 2-4.

2.3 Arm Light Does Not Come On

SHOCK HAZARD:
Use care when checking live voltages. Do not touch live terminals, wires, and ground. Failure to use caution will cause serious electrical shock injury.

1. The arm light malfunctions after replacing both bulbs.

   Yes **No**
   ↓ → Go to “Final Actions” on page 2-4.

NOTE:
The voltage of the Power Column differs depending on the option selected.

2. A voltage reading of either 120V AC, 240V AC, or 208V AC is available between the lug and the building circuit breaker terminal.

   Yes **No**
   ↓ → Replace the building circuit breaker (A) per the manufacturer’s instruction (see figure 2-1 on page 2-5).

3. The Power Column circuit breaker (A) is in the ON position (see figure 2-2 on page 2-6).

   Yes **No**
   ↓ → Reset the Power Column circuit breaker to the ON position.

4. A voltage reading of either 120V AC, 240V AC, or 208V AC is available between the lug and the Power Column breaker terminal.

   Yes **No**
   ↓ → Replace the Power Column circuit breaker. See “Circuit Breaker” on page 4-28.

5. The arm light electrical receptacle has been checked for proper operation.

   Yes **No**
   ↓ → Go to RAP 2.7.

6. Continuity is present between the arm light plug and the bulb sockets.

   Yes **No**
   ↓ → Repair or replace the arm light wiring.

7. Go to “Final Actions” on page 2-4.

2.4 Exam Light Does Not Come On

2

SHOCK HAZARD:
Use care when checking live voltages. Do not touch live terminals, wires, and ground. Failure to use caution will cause serious electrical shock injury.

1. The exam light malfunctions after replacing the bulb.

   Yes ↓ **No** → Go to “Final Actions” on page 2-4.

NOTE:
The voltage of the Power Column differs depending on the option selected.

2. A voltage reading of either 120V AC, 240V AC, or 208V AC is available between the lug and the building circuit breaker terminal.

   Yes ↓ **No** → Replace the building circuit breaker (A) per the manufacturer’s instruction (see figure 2-1 on page 2-5).

3. The Power Column circuit breaker (A) is in the ON position (see figure 2-2 on page 2-6).

   Yes ↓ **No** → Reset the Power Column circuit breaker to the ON position.

4. A voltage reading of either 120V AC, 240V AC, or 208V AC is available between the lug and the Power Column breaker terminal.

   Yes ↓ **No** → Replace the Power Column circuit breaker. See “Circuit Breaker” on page 4-28.

5. The exam light electrical receptacle has been checked for proper operation.

   Yes ↓ **No** → Go to RAP 2.7.

6. Continuity is present between the exam light plug and the bulb socket.

   Yes ↓ **No** → Repair or replace the exam light wiring.

7. Go to “Final Actions” on page 2-4.

2.5 STAT Clock/Timer Will Not Operate

SHOCK HAZARD:
Use care when checking live voltages. Do not touch live terminals, wires, and ground. Failure to use caution will cause serious electrical shock injury.

1. The self diagnostic test for the STAT Clock/Timer indicates no faults.

   Yes ↓ **No** → Remove the defective unit, (see “STAT Clock/Timer” on page 4-23), and return it to Hill-Rom.

NOTE:
The voltage of the Power Column differs depending on the option selected.

2. A voltage reading of either 120V AC, 240V AC, or 208V AC is available between the lug and the building circuit breaker terminal.

   Yes ↓ **No** → Replace the building circuit breaker (A) per the manufacturer’s instruction (see figure 2-1 on page 2-5).

3. The Power Column circuit breaker (A) is in the ON position (see figure 2-2 on page 2-6).

   Yes ↓ **No** → Reset the Power Column circuit breaker to the ON position.

4. A voltage reading of either 120V AC, 240V AC, or 208V AC is available between the lug and the Power Column breaker terminal.

   Yes ↓ **No** → Replace the Power Column circuit breaker. See “Circuit Breaker” on page 4-28.

5. Check the STAT Clock/Timer fuse is checked as follows:

   a. The STAT Clock/Timer (P967-00) (black faced) fuse is located on the front of the unit.

   b. The STAT Clock/Timer (P967B00) (white faced) fuse is located inside the unit.

   - Remove the STAT Clock/Timer from the Power Column or pod. See “STAT Clock/Timer” on page 4-23.
   - Remove the screws from the back of the STAT Clock/Timer.

2

c. Check that the fuse is operational.

Yes ↓ **No** → Replace the fuse (Model P967-00 (black faced) uses 1/4 A, 250V AC, delayed type fuse) (Model P967B00 (white faced) uses 0.32 ma, 250V AC, delayed type fuse).

6. A voltage reading of 120V AC or 240V AC is available at the STAT Clock/Timer plug.

Yes ↓ **No** → Repair or replace the wiring between the STAT Clock/Timer plug and the electrical outlet.

7. The STAT Clock/Timer is operative.

Yes ↓ **No** → Remove and replace the STAT Clock/Timer. See “STAT Clock/Timer” on page 4-23.

8. Go to “Final Actions” on page 2-4.

2.6 The Line Isolation Monitor (LIM) Alarm Sounds

SHOCK HAZARD:
Use care when checking live voltages. Do not touch live terminals, wires, and ground. Failure to use caution will cause serious electrical shock injury.

1. A voltage reading at the LIM plug is under 5 Milliampere (US) (2 Milliampere (Canada)).

   Yes ↓ **No** → Correct electrical problem causing a 5 Milliampere (US) (2 Milliampere (Canada)) leakage as follows:

   a. Remove the externally connected equipment until the leakage returns to an acceptable level.

   b. Replace the defective externally connected equipment.

2. No faults are detected after running a functional check on the LIM.

   Yes ↓ **No** → Replace the existing LIM with a known operational unit. See “Line Isolation Monitor” on page 4-25.

3. Remove the malfunctioning LIM, and replace it with a known operational unit. This solves the problem.

   Yes ↓ **No** → Call Hill-Rom Technical Support at (800) 445-3720 for assistance.

4. Go to “Final Actions” on page 2-4.

2.7 Standard or Emergency Electrical Receptacle Is Inoperative

2

SHOCK HAZARD:
Use care when checking live voltages. Do not touch live terminals, wires, and ground. Failure to use caution will cause serious electrical shock injury.

NOTE:
The voltage of the Power Column differs depending on the option selected.

1. A voltage reading of either 120V AC, 240V AC, or 208V AC is available between the lug and the building circuit breaker terminal.

   Yes ↓ **No** → Replace the building circuit breaker (A) per the manufacturer's instruction (see figure 2-1 on page 2-5).

2. The Power Column circuit breaker (A) is in the ON position (see figure 2-2 on page 2-6).

   Yes ↓ **No** → Reset the Power Column circuit breaker to the ON position.

3. A voltage reading of either 120V AC, 240V AC, or 208V AC is available between the lug and the Power Column breaker terminal.

   Yes ↓ **No** → Replace the Power Column circuit breaker. See "Circuit Breaker" on page 4-28.

4. A voltage reading of 125V AC is available at the wire terminals on the receptacle.

   Yes ↓ **No** → Repair or replace the wiring between the circuit breaker and the receptacle.

5. The voltage reads 125V AC between the receptacle's short slot and the ground terminal. Also, the voltage reads 125V AC between the receptacle's short slot and the long slot.

   Yes ↓ **No** → Replace the electrical receptacle. See "Electrical Receptacle" on page 4-3.

6. Go to "Final Actions" on page 2-4.

2.8 Line Voltage Switch Will Not Operate the Attached Device

SHOCK HAZARD:
Use care when checking live voltages. Do not touch live terminals, wires, and ground. Failure to use caution will cause serious electrical shock injury.

NOTE:
The voltage of the Power Column differs depending on the option selected.

1. A voltage reading of either 120V AC, 240V AC, or 208V AC is available between the lug and the building circuit breaker terminal.

   Yes **No**
   ↓ → Replace the building circuit breaker (A) per the manufacturer's instruction (see figure 2-1 on page 2-5).

2. The Power Column circuit breaker (A) is in the ON position (see figure 2-2 on page 2-6).

   Yes **No**
   ↓ → Reset the Power Column circuit breaker to the ON position.

3. A voltage reading of 120V AC is available between the lug and the Power Column breaker terminal.

   Yes **No**
   ↓ → Replace the Power Column circuit breaker. See "Circuit Breaker" on page 4-28.

4. A voltage reading of 120V AC is available at the wire terminals on the line voltage switch.

   Yes **No**
   ↓ → Repair or replace the wiring between the circuit breaker and the line voltage switch.

5. The line voltage switch has continuity when checked as follows:

   a. Set the applicable Power Column circuit breaker to the OFF position.

   b. Remove the wires from the switch terminals.

   c. Place the switch in the ON position.

2

d. There is continuity between the switch terminals.

Yes ↓

No → Replace the line voltage switch. See “Line Voltage Switch” on page 4-12.

6. Go to “Final Actions” on page 2-4.

2.9 Timed Light Switch or Toggle Switch Does Not Operate Properly

SHOCK HAZARD:
Use care when checking live voltages. Do not touch live terminals, wires, and ground. Failure to use caution will cause serious electrical shock injury.

NOTE:
The voltage of the Power Column differs depending on the option selected.

1. A voltage reading of either 120V AC, 240V AC, or 208V AC is available between the lug and the building circuit breaker terminal.

   Yes ↓ **No** → Replace the building circuit breaker (A) per the manufacturer's instruction (see figure 2-1 on page 2-5).

2. The Power Column circuit breaker (A) is in the ON position (see figure 2-2 on page 2-6).

   Yes ↓ **No** → Reset the Power Column circuit breaker to the ON position.

3. A voltage reading of 120V AC is available between the lug and the Power Column breaker terminal.

   Yes ↓ **No** → Replace the Power Column circuit breaker. See "Circuit Breaker" on page 4-28.

4. A voltage reading of 120V AC is available at the wire terminals on the toggle switch.

   Yes ↓ **No** → Repair or replace the wiring between the circuit breaker and the toggle switch.

5. Place the toggle switch in the ON position. The lights turn ON.

   Yes ↓ **No** → Replace the applicable light bulb.

6. The light is operational.

   Yes ↓ **No** → Replace the toggle switch. See "Timed Light Switch and Toggle Switch" on page 4-16.

2

7. Place the toggle switch in the OFF position. The lights turn OFF at the setting of the timer (0-15 minutes).

   Yes ↓ **No** → Adjust the timer to the correct setting. See “STAT Clock/Timer” on page 4-23.

8. The light turns off at the correct time.

   Yes ↓ **No** → Replace the timer assembly. See “Timed Light Switch and Toggle Switch” on page 4-16.

9. Go to “Final Actions” on page 2-4.

2.10 Dimmer Switch Will Not Operate the Light

SHOCK HAZARD:
Use care when checking live voltages. Do not touch live terminals, wires, and ground. Failure to use caution will cause serious electrical shock injury.

NOTE:
The voltage of the Power Column differs depending on the option selected.

1. A voltage reading of either 120V AC, 240V AC, or 208V AC is available between the lug and the building circuit breaker terminal.

   Yes ↓ **No** → Replace the building circuit breaker (A) per the manufacturer's instruction (see figure 2-1 on page 2-5).

2. The Power Column circuit breaker (A) is in the ON position (see figure 2-2 on page 2-6).

   Yes ↓ **No** → Reset the Power Column circuit breaker to the ON position.

3. A voltage reading of 120V AC is available between the lug and the Power Column breaker terminal.

   Yes ↓ **No** → Replace the Power Column circuit breaker. See "Circuit Breaker" on page 4-28.

4. A voltage reading of 120V AC is available at the wire terminals on the dimmer switch.

   Yes ↓ **No** → Repair or replace the wiring between the circuit breaker and the dimmer switch.

5. Rotate the dimmer switch to the full clockwise position and back to a full counterclockwise position. The light brightens then dims.

   Yes ↓ **No** → Replace the applicable light bulb.

6. The light is fully functional from dim to bright.

   Yes ↓ **No** → Replace the dimmer switch. See "Dimmer Switch" on page 4-10.

7. Go to “Final Actions” on page 2-4.

2.11 Power Column Circuit Breaker Is Inoperative

1. The involved building circuit breaker in the ON position (see figure 2-1 on page 2-5).

   Yes ↓ **No** → Reset the circuit breaker to the ON position.

2. The Power Column circuit breaker is in the ON position (see figure 2-2 on page 2-6).

   Yes ↓ **No** → Reset the circuit breaker to the ON position.

3. The circuit breaker is operative.

   Yes ↓ **No** → Go to step 5.

4. Go to “Final Actions” on page 2-4.

SHOCK HAZARD:
To minimize the risk of electrical shock or damage to the equipment, disconnect all electrical power to the Power Column before working on it. Failure to do so could result in personal injury or equipment damage.

5. Perform the following:
   a. Locate the involved building standard/emergency circuit breaker panel.
   b. Set the involved circuit breaker (A) to OFF (see figure 2-1 on page 2-5).
   c. Lock out and tag the breaker.
   d. Continuity exists in the wiring between the Power Column circuit breaker and the related equipment.

   Yes ↓ **No** → Repair or replace the wires from the Power Column circuit breaker to the related equipment.

6. Check for continuity in the Power Column circuit breaker as follows:
   a. Set the involved Power Column circuit breaker to the OFF position.
   b. Remove the Power Column circuit breaker. See “Circuit Breaker” on page 4-28.
   c. Continuity exists between the lug and the Power Column circuit breaker terminal.

Yes **No**
↓ → Replace the Power Column circuit breaker with a new circuit breaker.

7. Go to “Final Actions” on page 2-4.

Chapter 3
Theory of Operation

Electrical System . . . . . 3 - 3
Theory of Operation . . . . . 3 - 7
Main Junction Box . . . . . 3 - 7
Standard Power . . . . . 3 - 7
Circuit Breaker Panel . . . . . 3 - 7
Circuit Breakers . . . . . 3 - 7
Isolation (Emergency) Power . . . . . 3 - 8
Medical Gases/Vacuum . . . . . 3 - 8
Communications . . . . . 3 - 8

3

NOTES:

Electrical System

Figure 3-1. Electrical System Block Diagram

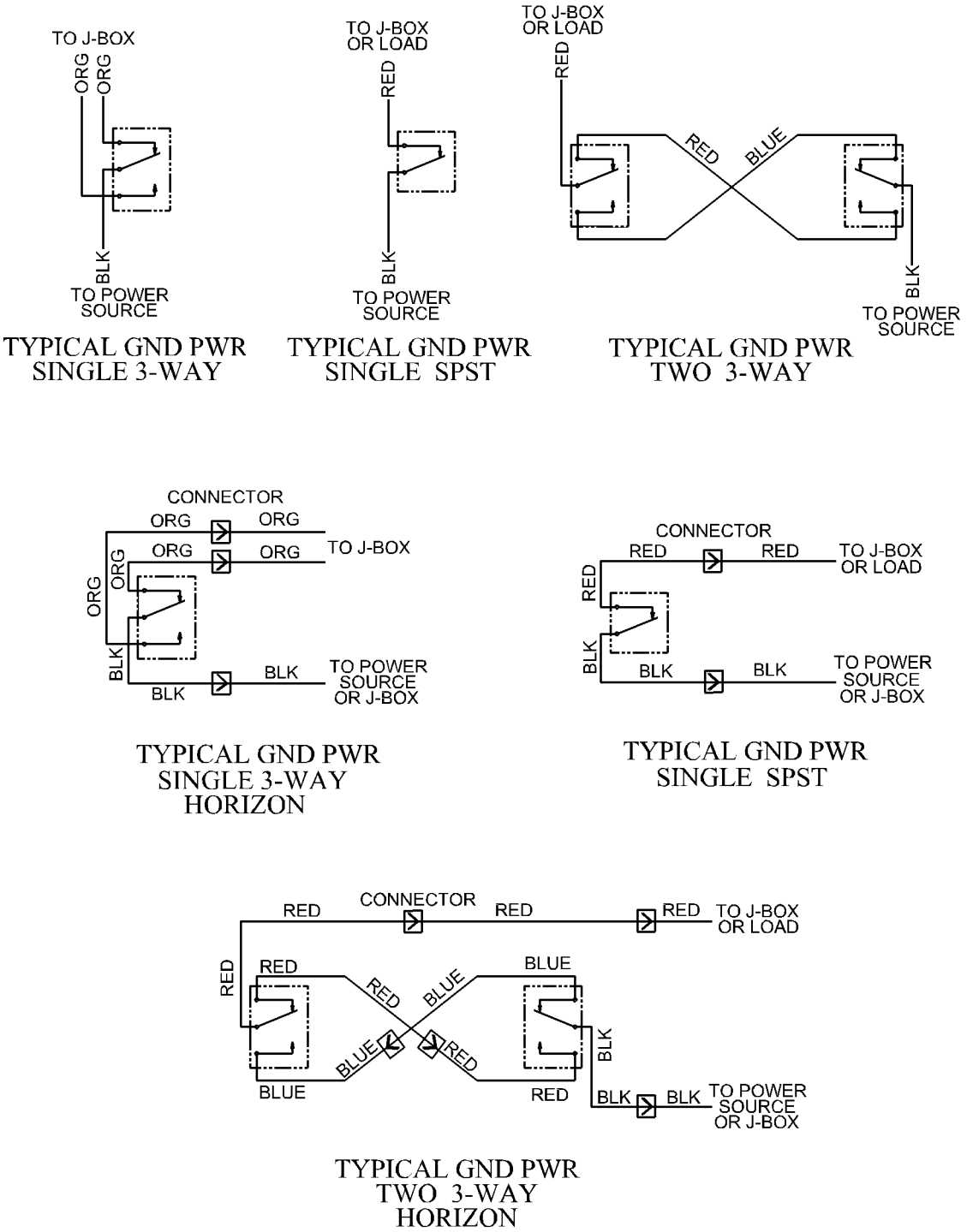

Figure 3-2. Typical Electrical Switch Wiring Diagrams

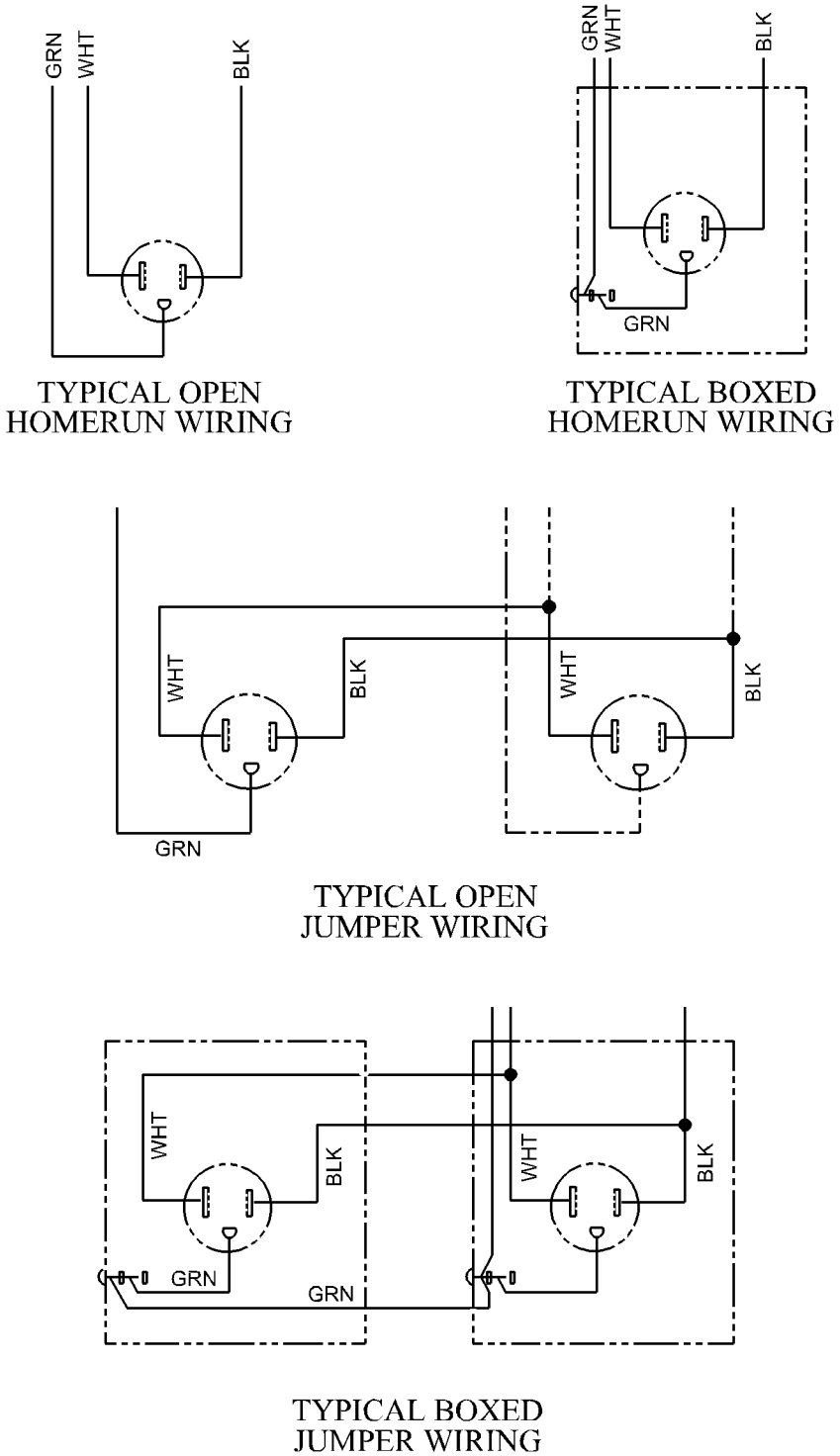

NOTE:
These are typical electrical switch wiring diagrams. Refer to your as-built drawings for actual wire colors.

Figure 3-3. Typical Grounded Power Receptacle Wiring Diagrams

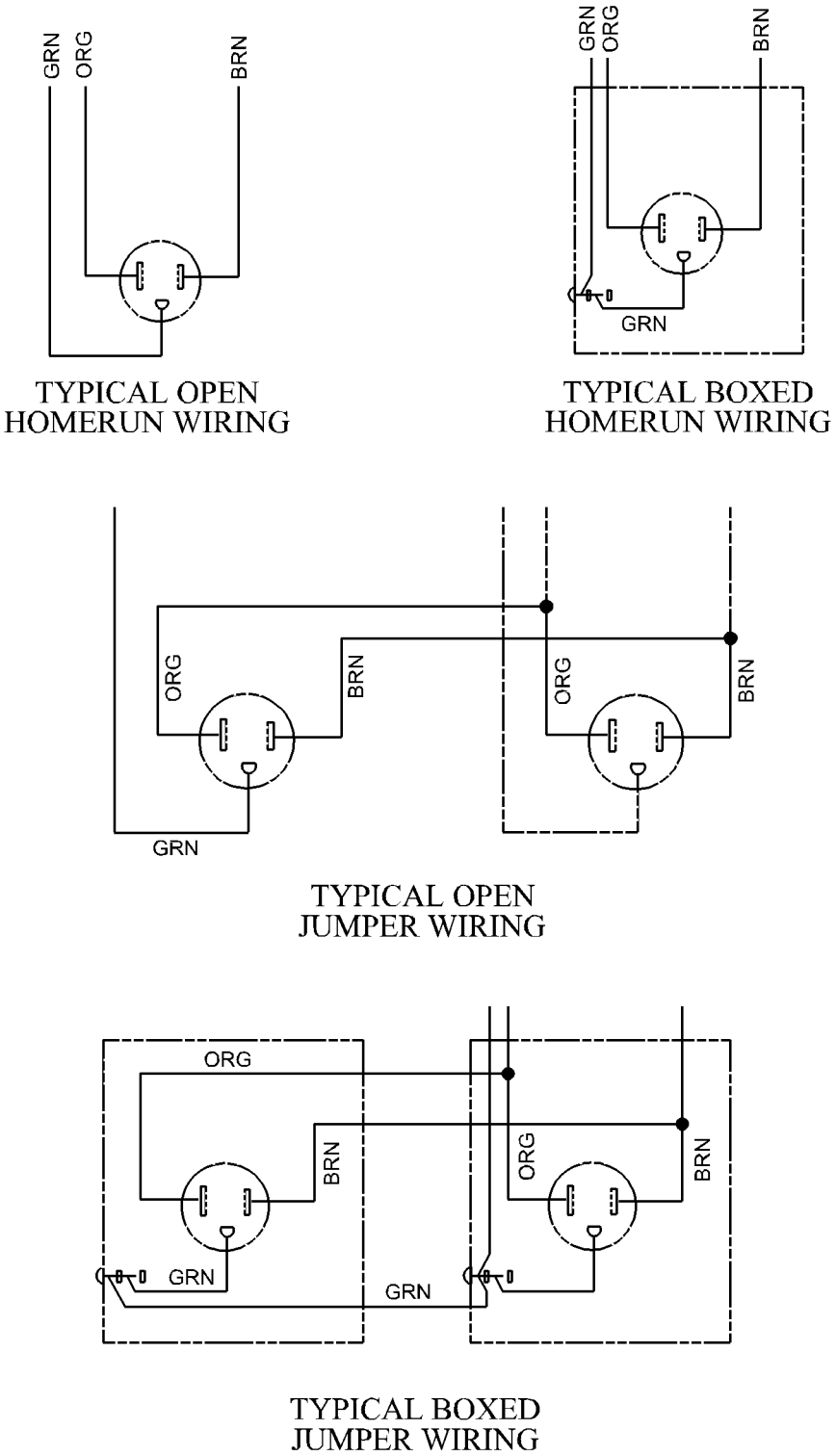

m042a101

3

Figure 3-4. Typical Isolation Power Receptacles Wiring Diagram

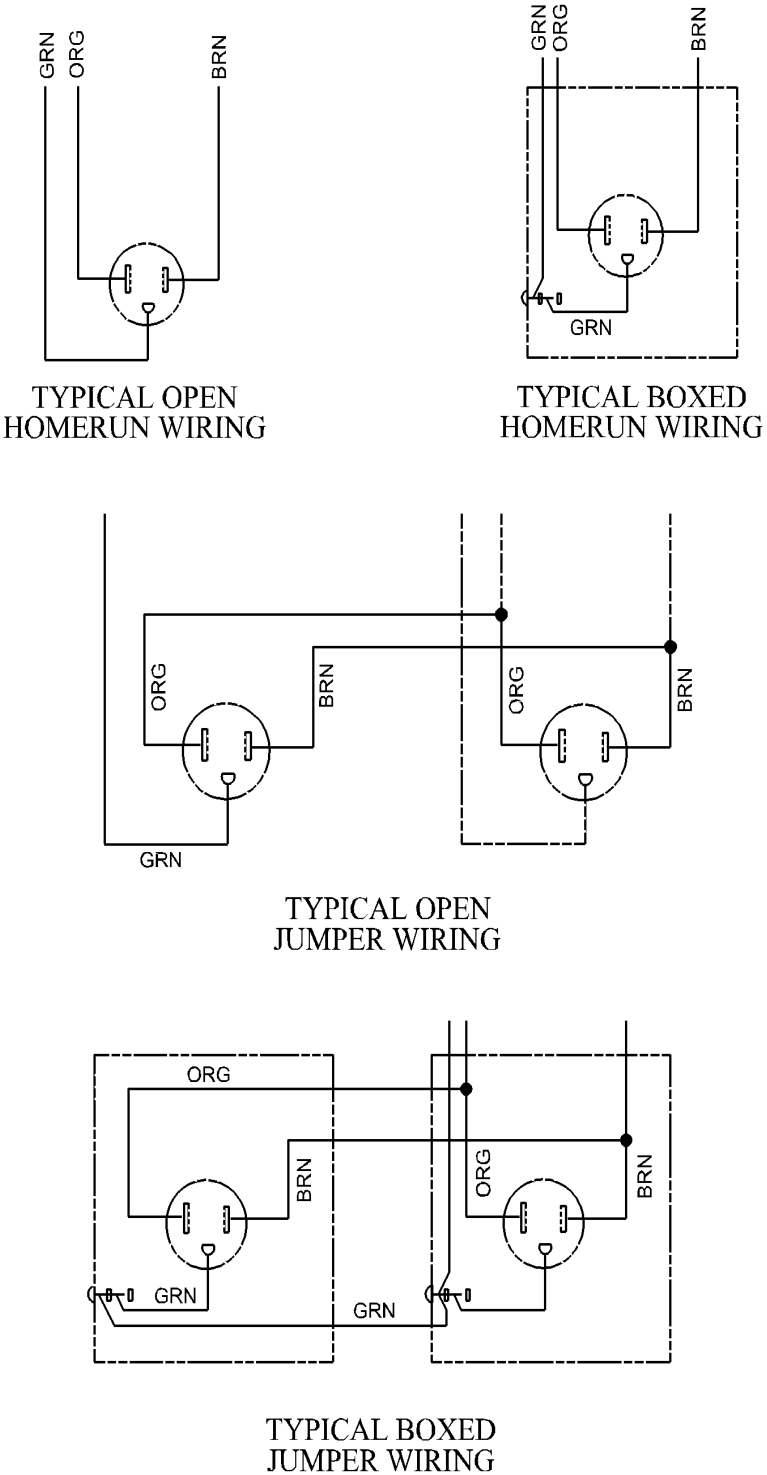

m042a102

Theory of Operation

The Power Column “zones” services for maximum productivity and safety. All services integrated into the column are separated by function and organized into distinct zones to reduce confusion during use. The Power Column consists of a main column encased with high pressure laminated panels and four aluminum accessory tracks. The area under the laminated panels contains power lines, communication lines, telephone lines, and piping for medical gases.

Main Junction Box

All electrical power, communications, telephone services, and gas/vacuum lines are dropped to the Power Column through the mounting ring, behind the shroud, and down into the junction box. The junction box has four separate compartments for standard electrical, communications, telephone, and optional Isolation (emergency) power. The junction box also separates the gas/vacuum lines, from the electrical zones, and routes them to the gas/vacuum outlets.

Standard Power

Standard power is available to the Power Column through the standard power circuit breaker panel.

Circuit Breaker Panel

The circuit breaker panel is located near the upper rear of the Power Column. It has a pre-installed electrical load center interior that accepts plug-in molded case circuit breakers. There are three options for Power Column circuit breaker panels:

- Single phase, two wire, 120V AC at 30 or 50 amp
- Single phase, three wire, 120/240V AC at 30 or 50 amp
- Three phase, four wire, 120/208V AC at 30 or 50 amp

Circuit Breakers

The circuit breakers installed in the circuit breaker panel are branch wired. Circuit breakers indicate tripping due to short circuit or overcurrent. The circuit breakers are wired as indicated on the specific shop/engineering drawings.

Isolation (Emergency) Power

Isolation (emergency) power is supplied to the Power Column through the optional isolation transformer. When standard electrical power to the Power Column is interrupted, the isolation transformer supplies electrical power to vital power column systems. The isolation transformer is located at the lower rear of the Power Column. The options for isolation transformer power are as follows;

- 3KVA, 120V or 208V or 240V or 277V AC
- 5KVA, 120V or 208V or 240V or 277V AC

Medical Gases/Vacuum

Copper tubing with a 3/8" (10 mm) outside diameter carries the medical gases or vacuum to the single gas/vacuum outlets. Copper tubing with a 1/2" (1.27 cm) to 5/8" (1.59 cm) outside diameter carries the medical gases or vacuum to the multiple gas/vacuum outlets.

Communications

Communications for the Power Column are carried by low voltage.

Chapter 4
Removal, Replacement, and Adjustment Procedures

Chapter Contents

Electrical Receptacle . . . . . 4 - 3
- Removal . . . . . 4 - 3
- Replacement . . . . . 4 - 6

Ground Receptacle . . . . . 4 - 7
- Removal . . . . . 4 - 7
- Replacement . . . . . 4 - 9

Dimmer Switch . . . . . 4 - 10
- Removal . . . . . 4 - 10
- Replacement . . . . . 4 - 11

Line Voltage Switch . . . . . 4 - 12
- Removal . . . . . 4 - 12
- Replacement . . . . . 4 - 13

Telemate Receptacle . . . . . 4 - 14
- Removal . . . . . 4 - 14
- Replacement . . . . . 4 - 14

Timed Light Switch and Toggle Switch . . . . . 4 - 16
- Removal . . . . . 4 - 16
- Replacement . . . . . 4 - 17
- Adjustment . . . . . 4 - 18

Chart Light or Night Light Switch . . . . . 4 - 19
- Removal . . . . . 4 - 19
- Replacement . . . . . 4 - 20

Chart Light or Night Light Bulb . . . . . 4 - 21
- Removal . . . . . 4 - 21

4

Replacement . . . . . 4 - 22
STAT Clock/Timer . . . . . 4 - 23
Removal . . . . . 4 - 23
Replacement . . . . . 4 - 24
Line Isolation Monitor . . . . . 4 - 25
Removal . . . . . 4 - 25
Replacement . . . . . 4 - 27
Circuit Breaker . . . . . 4 - 28
Removal . . . . . 4 - 28
Replacement . . . . . 4 - 29
Low Voltage Controller . . . . . 4 - 30
Removal . . . . . 4 - 30
Replacement . . . . . 4 - 32
Demand Valves (Oxygen, Vacuum, Air, Nitrous Oxide). . . . . 4 - 33
Removal . . . . . 4 - 33
Replacement . . . . . 4 - 34
Shroud Assembly . . . . . 4 - 36
Removal . . . . . 4 - 36
Replacement . . . . . 4 - 38
Ceiling Ring . . . . . 4 - 39
Removal . . . . . 4 - 39
Replacement . . . . . 4 - 41
Front and Rear Laminate/Steel Panels . . . . . 4 - 42
Removal . . . . . 4 - 42
Replacement . . . . . 4 - 42
Side Laminate/Steel Panels. . . . . 4 - 44
Removal . . . . . 4 - 44
Replacement . . . . . 4 - 44

4.1 Electrical Receptacle

Tools required: Screwdriver
Phillips head screwdriver

NOTE:
The following procedures apply to standard or emergency, single and double electrical outlets.

Removal

SHOCK HAZARD:
To minimize the risk of electrical shock or damage to equipment, disconnect all electrical power to the system before working on it. Failure to do so could result in personal injury or equipment damage.

1. Perform the following:
   a. Locate the involved building standard/emergency circuit breaker panel.
   b. Set the involved circuit breaker (A) to OFF (see figure 4-1 on page 4-3).

Figure 4-1. Standard or Emergency Circuit Breaker Box

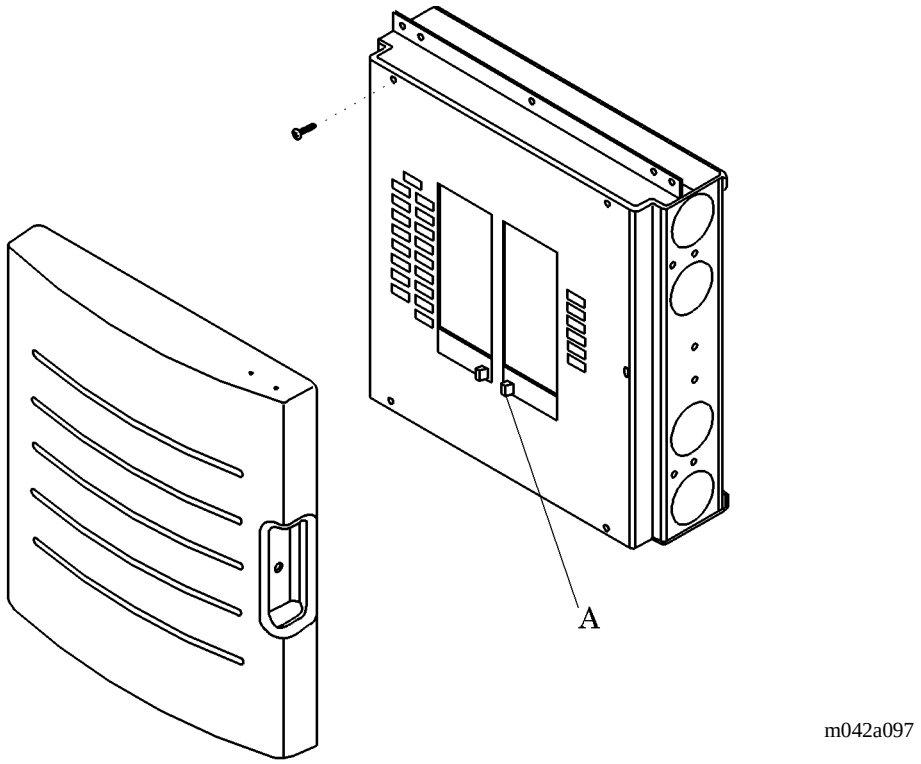

   c. Lock out and tag out the breaker.

2. Remove the screws (A) from the faceplate (B) (see figure 4-2 on page 4-5).

3. Remove the faceplate (B) and, if equipped, insulator (C).

4. Remove the electrical receptacle outlet attaching screws (D).

5. Remove the electrical receptacle outlet (E) from the opening in the power column structure.

6. Record the positions of the color-coded wires (F) on the receptacle terminals.

7. Loosen the terminal screws, and remove the color-coded wires (F) from the terminals.

Figure 4-2. Electrical Outlet Removal

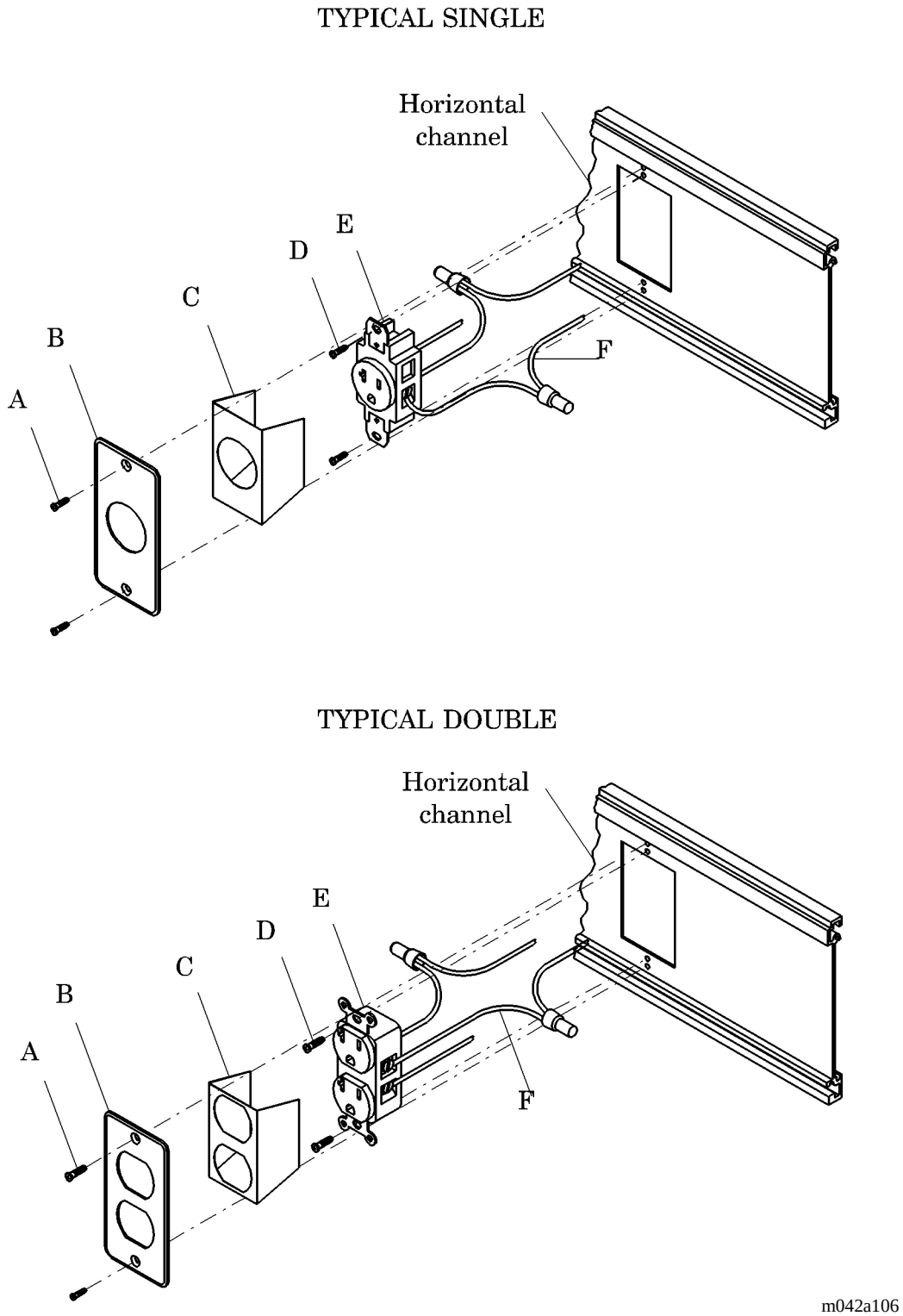

Replacement

1. Install the color-coded wires (F) at their original terminals, and tighten the terminal screws.
2. Insert the electrical receptacle outlet (E) into the opening in the power column structure.
3. Install and tighten the electrical receptacle outlet attaching screws (D).
4. Install the insulator (C), if equipped, faceplate (B), and screws (A). Tighten the screws (A).
5. Remove the out-of-service tags, and turn the circuit breaker ON.
6. Test the receptacle for availability of power (see “Standard or Emergency Electrical Receptacle Is Inoperative” on page 2-14).

4.2 Ground Receptacle

Tools required: Screwdriver
Phillips head screwdriver

NOTE:
The following procedures apply to single, double, and dual ground receptacles.

Removal

1. Remove the screws (A) and the faceplate (B) (see figure 4-3 on page 4-8).
2. Remove the screws (C) and mounting plate (D) from the opening in the power column structure.
3. Remove the nut (E), washer (F), dual ground tie bar (G), if applicable, and disconnect the ground receptacle wire(s).
4. Remove the screw (H), lockwasher (I), and ground wire, if applicable.

Figure 4-3. Ground Receptacle Removal

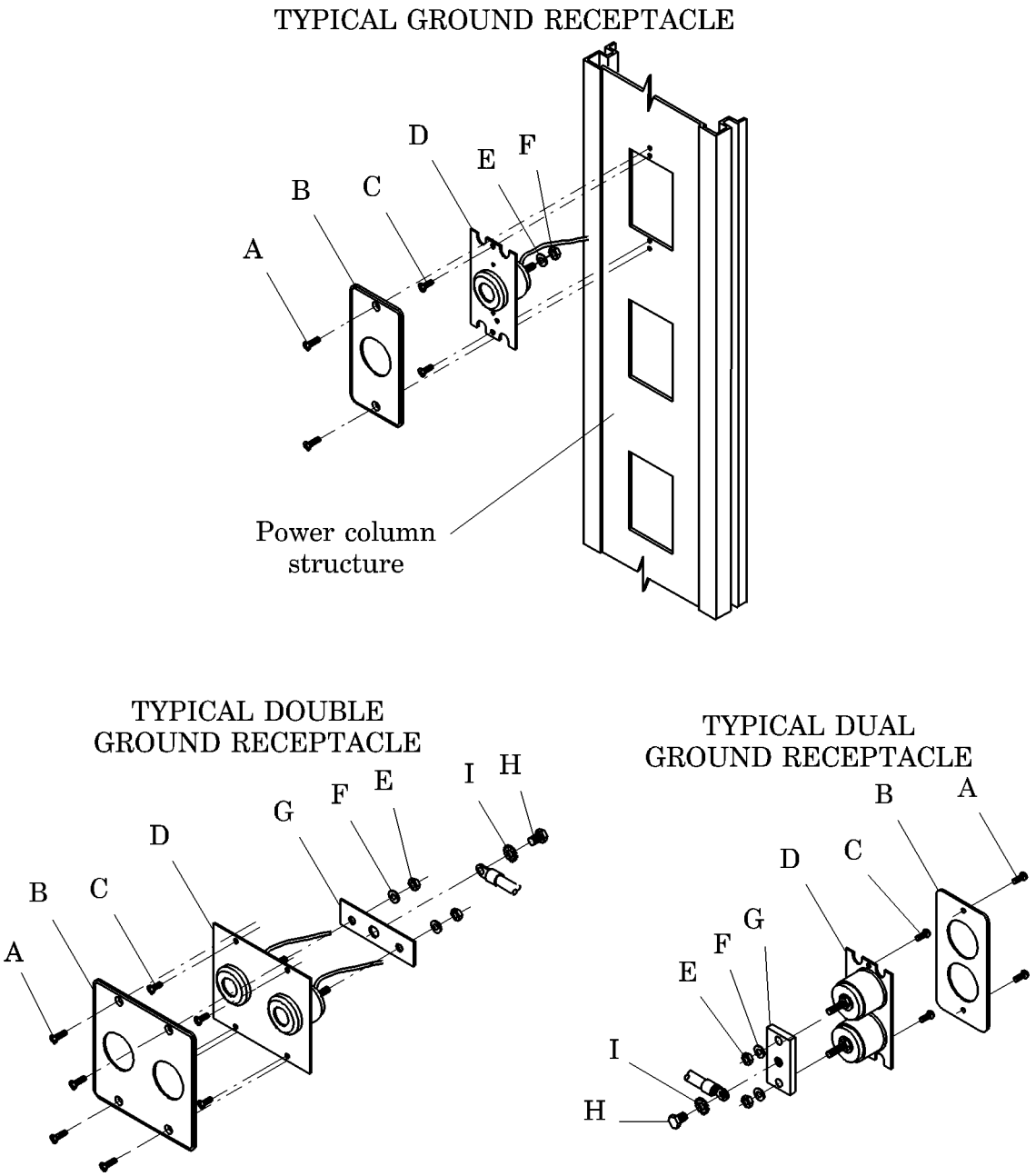

Replacement

1. Install the ground wire, lockwasher (I), and screw (H), if applicable.
2. Connect the ground receptacle wire(s), and install the dual ground tie bar (G), if applicable, washer (F), and nut (E).
3. Install the mounting plate (D) and screws (C). Tighten the screws (C).
4. Install the faceplate (B) and screws (A). Tighten the screws (A).
5. Test for availability of ground with a ground test light.

4.3 Dimmer Switch

Tools required: Screwdriver
Phillips head screwdriver

Removal

SHOCK HAZARD:
To minimize the risk of electrical shock or damage to equipment, disconnect all electrical power to the system before working on it. Failure to do so could result in personal injury or equipment damage.

1. Perform the following:
   a. Locate the involved building standard/emergency circuit breaker panel.
   b. Set the involved circuit breaker (A) to OFF (see figure 4-1 on page 4-3).
   c. Lock out and tag out the breaker.
2. Remove the dimmer switch button (A) (see figure 4-4 on page 4-10).

4

Figure 4-4. Dimmer Switch Removal

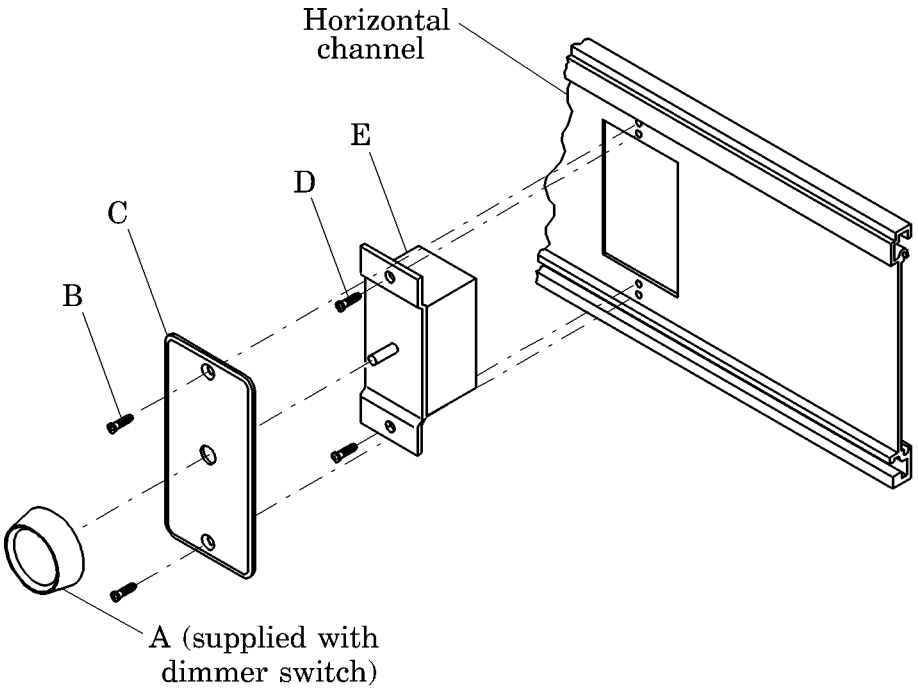

m042a108

3. Remove the screws (B) and faceplate (C).
4. Remove the switch retaining screws (D), and remove the switch (E) from the power column structure.
5. Record the positions of the color-coded wires on the switch terminals.
6. Loosen the terminal screws on the switch, and remove the wires from the switch (E).

Replacement

1. Install the color-coded wires at their original terminals, and tighten the terminal screws on the switch (E).
2. Install the switch (E) into the power column structure and switch retaining screws (D). Tighten the switch retaining screws (D).
3. Install the faceplate (C) and screws (B). Tighten the screws (B).
4. Install the dimmer switch button (A).
5. Remove the out-of-service tags, and turn the circuit breaker ON.
6. Test the switch for proper operation (see “Dimmer Switch Will Not Operate the Light” on page 2-19).

4.4 Line Voltage Switch

Tools required: Screwdriver
Phillips head screwdriver

Removal

SHOCK HAZARD:
To minimize the risk of electrical shock or damage to equipment, disconnect all electrical power to the system before working on it. Failure to do so could result in personal injury or equipment damage.

1. Perform the following:
   a. Locate the involved building standard/emergency circuit breaker panel.
   b. Set the involved circuit breaker (A) to OFF (see figure 4-1 on page 4-3).
   c. Lock out and tag out the breaker.
2. Remove the faceplate screws (A) (see figure 4-5 on page 4-13).
3. Remove the faceplate (B) and, if equipped, the insulator (C).
4. Remove the switch retaining screws (D) and the switch (E) from the power column structure.
5. Record the positions of the color-coded wires on the switch terminals.
6. Loosen the terminal screws on the switch, and remove the wires from the switch (E).

Figure 4-5. Line Voltage Switch Removal

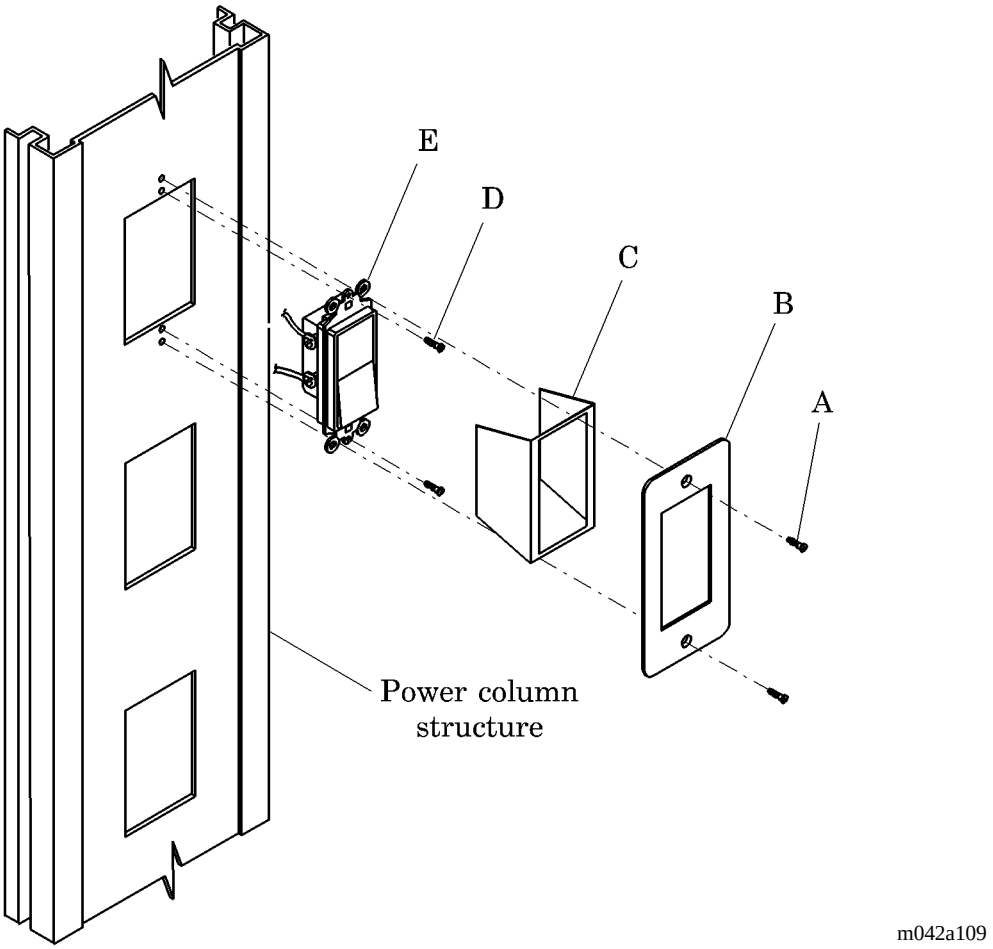

Replacement

1. Install the color-coded wires at their original terminals, and tighten the terminal screws on the switch (E).
2. Install the switch (E) into the power column structure and switch retaining screws (D). Tighten switch retaining screws (D).
3. Install the insulator (C), if equipped, and the faceplate (B).
4. Install and tighten the faceplate screws (A).
5. Remove the out-of-service tags, and turn the circuit breaker ON.
6. Test the switch for proper operation (see “Line Voltage Switch Will Not Operate the Attached Device” on page 2-15).

4.5 Telemate Receptacle

Tools required: Phillips head screwdriver

Removal

1. Remove the faceplate screws (A) and the telemate receptacle faceplate (B) (see figure 4-6 on page 4-14).

Figure 4-6. Telemate Receptacle Removal

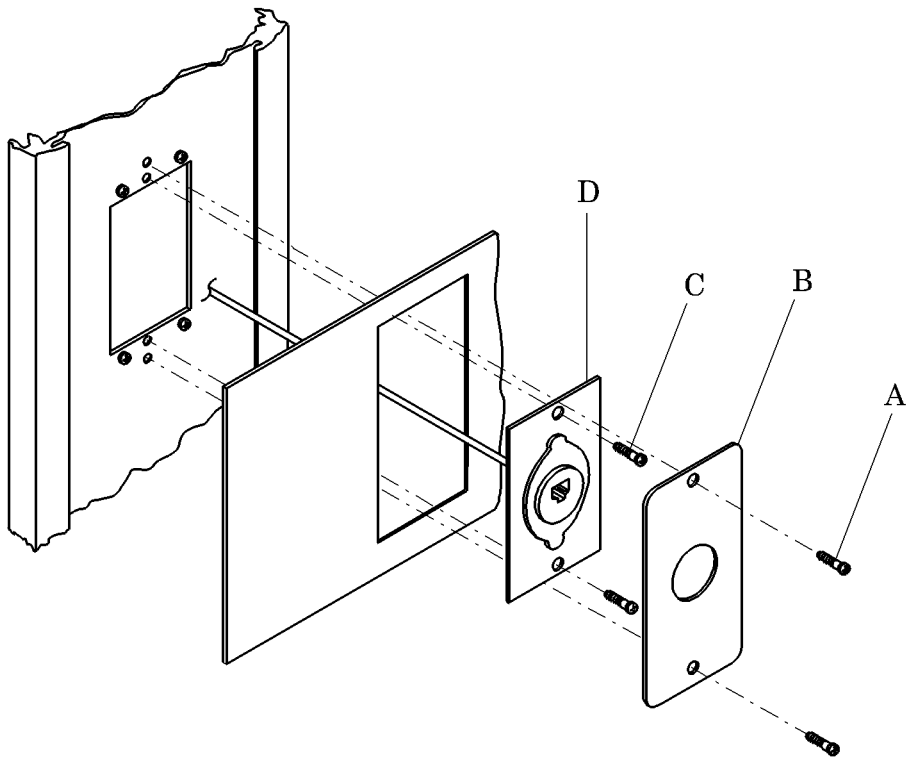

2. Remove the telemate receptacle retaining screws (C) and the Telemate receptacle (D) from the power column structure.

3. Remove the telephone inferface connector from the back of the telemate receptacle (D).

Replacement

1. Install the telephone interface connector to the back of the telemate receptacle (D).

2. Install the telemate receptacle (D) and telemate receptacle retaining screws (C) to the power column structure. Tighten the telemate receptacle retaining screws (C).

3. Install the telemate receptacle faceplate (B) and faceplate screws (A). Tighten the faceplate screws (A).

4. Check the telephone interface connector for correct phone operation.

4.6 Timed Light Switch and Toggle Switch

Tools required: Screwdriver
Phillips head screwdriver

Removal

SHOCK HAZARD:
To minimize the risk of electrical shock or damage to equipment, disconnect all electrical power to the system before working on it. Failure to do so could result in personal injury or equipment damage.

1. Perform the following:
   a. Locate the involved building standard/emergency circuit breaker panel.
   b. Set the involved circuit breaker (A) to OFF (see figure 4-1 on page 4-3).
   c. Lock out and tag out the breaker.
2. Remove the timed light switch mounting screws (A) (see figure 4-7 on page 4-17).
3. Pull the timer assembly (B) away from the power column opening.
4. Remove the wire joint (C) from the timed light switch ground wire.
5. Remove the switch mounting screws (D).
6. Pull the switch (E) away from the power column opening.
7. Record the positions of the color-coded wires (F) on the timer assembly (B) and switch (E) terminals.
8. Loosen the terminal screws on the timer assembly (B) and switch (E), and remove the wires.

Figure 4-7. Timed Light Switch and Toggle Switch Removal

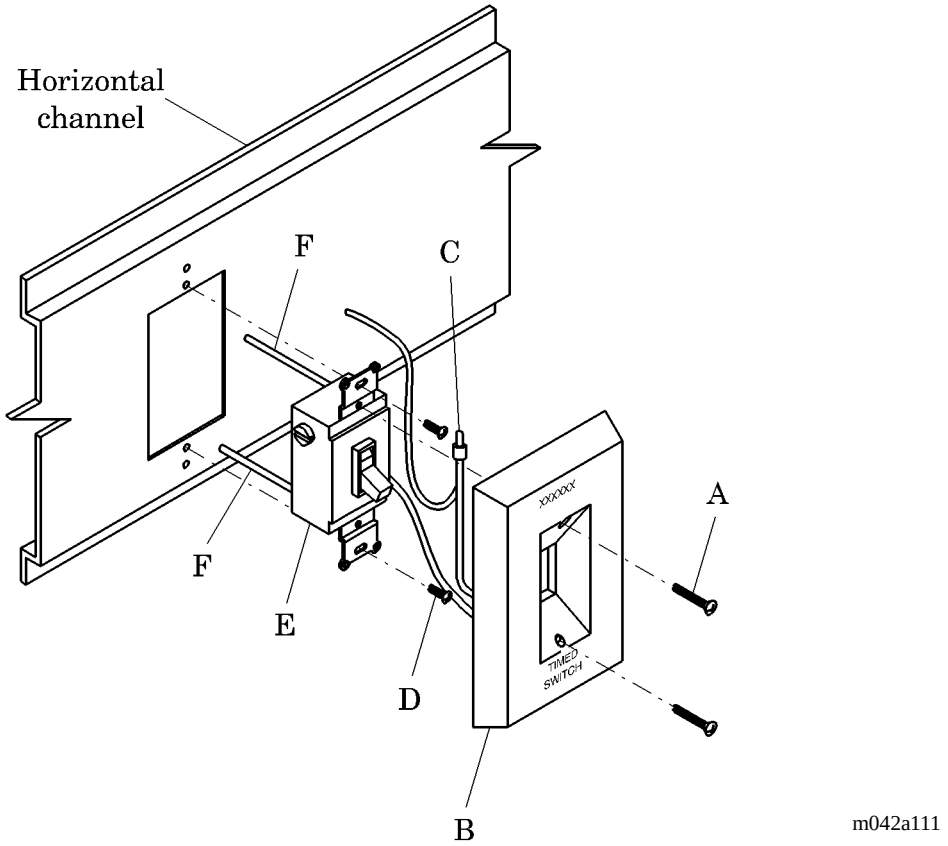

Replacement

1. Install the color-coded wires (F) at their original terminals, and tighten the terminal screws on the switch (E) and timer assembly (B).
2. Install the switch (E) and switch mounting screws (D). Tighten the switch mounting screws (D).
3. Install the wire joint (C) to the timed light switch ground wire.
4. Install the timer assembly (B) and timed light switch mounting screws (A). Tighten the timed light switch mounting screws (A).
5. Remove the out-of-service tags, and turn the circuit breaker ON.
6. Test the timed light switch or toggle switch for proper operation (see “Timed Light Switch or Toggle Switch Does Not Operate Properly” on page 2-17).

Adjustment

NOTE:
The timed light switch is adjustable from 10 minutes to 12 hours.

1. Remove the timed light switch mounting screws (A) and the timer assembly (B) (see figure 4-7 on page 4-17).

2. Find the dial (G) on the back of the timer assembly (see figure 4-8 on page 4-18).

Figure 4-8. Light Switch Timer Adjustment

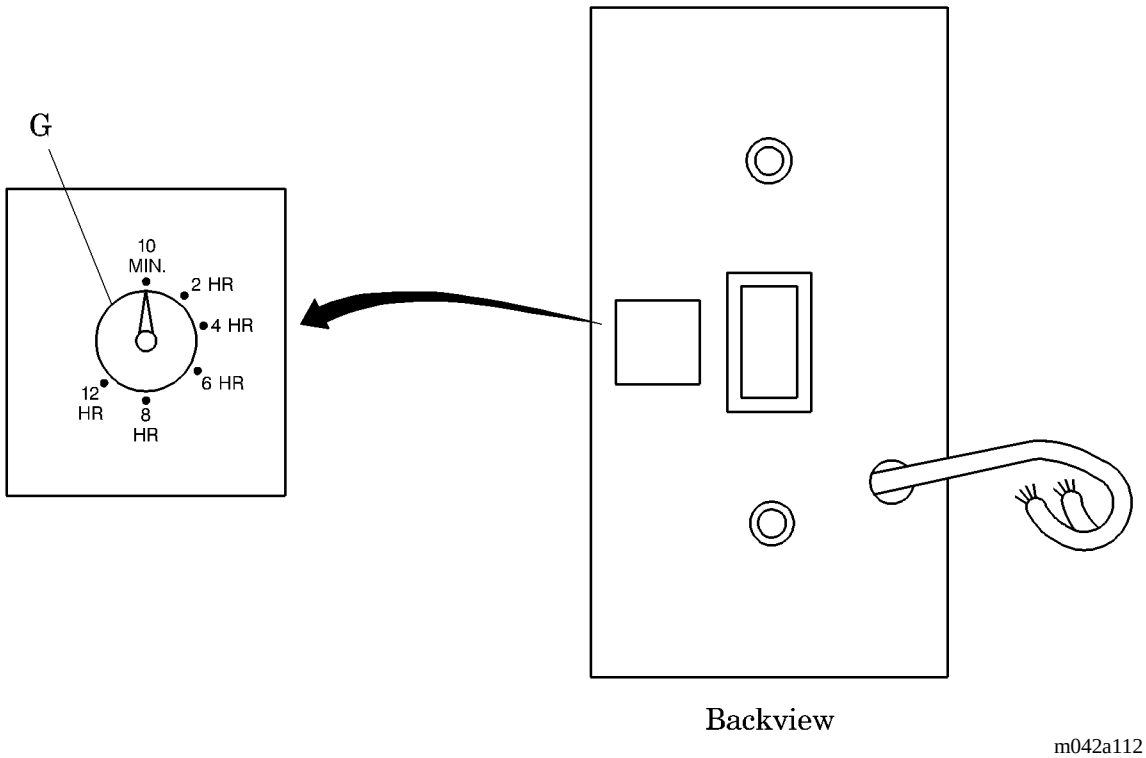

3. Adjust the dial (G) to the desired setting between 10 minutes and 12 hours.

4. Install the timer assembly (B) and timed light switch mounting screws (A), and check for proper delay after switching the light off.

4.7 Chart Light or Night Light Switch

Tools required: Screwdriver
Phillips head screwdriver
Adjustable wrench

Removal

SHOCK HAZARD:
To minimize the risk of electrical shock or damage to equipment, disconnect all electrical power to the system before working on it. Failure to do so could result in personal injury or equipment damage.

1. Perform the following:
   a. Locate the involved building standard/emergency circuit breaker panel.
   b. Set the involved circuit breaker (A) to OFF (see figure 4-1 on page 4-3).
   c. Lock out and tag out the breaker.
2. Remove the screws (A) and the chart/night light faceplate (B) from the power column structure (see figure 4-9 on page 4-20).
3. Remove the backbox attaching screws (C) and backbox (D) from the power column structure.
4. Remove the hexnut (E) from the base of the switch (F).
5. Remove the switch (F) from the power column structure.
6. Record the positions of the color-coded wires on the switch (F) terminals.
7. Loosen the terminal screws on the switch, and remove the wires from the switch (F).

4

Figure 4-9. Chart Light or Night Light Switch Removal

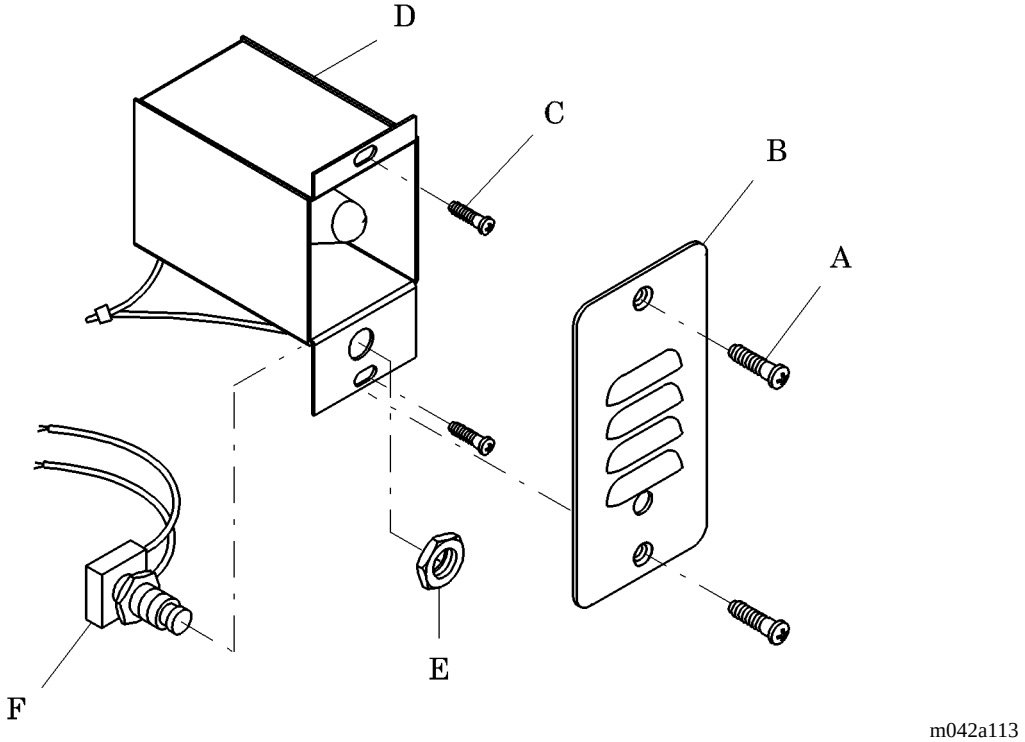

4

Replacement

1. Install the color-coded wires at their original terminals, and tighten the terminal screws on the switch (F).
2. Install the switch (F) and hexnut (E) to the backbox (D). Tighten the hexnut (E).
3. Install the backbox (D) and backbox attaching screws (C) in the power column structure. Tighten the backbox attaching screws (C).
4. Install the chart/night light faceplate (B) and screws (A). Tighten the screws (A).
5. Remove the out-of-service tags, and turn the circuit breaker ON.
6. Turn the switch on to see if the chart light or night light is working (see “Chart Light Does Not Come On” on page 2-5) or (see “Night Light Does Not Come On” on page 2-8).

4.8 Chart Light or Night Light Bulb

Tools required: Phillips head screwdriver

Removal

SHOCK HAZARD:
To minimize the risk of electrical shock or damage to equipment, disconnect all electrical power to the system before working on it. Failure to do so could result in personal injury or equipment damage.

1. Perform the following:
   a. Locate the involved building standard/emergency circuit breaker panel.
   b. Set the involved circuit breaker (A) to OFF (see figure 4-1 on page 4-3).
   c. Lock out and tag out the breaker.
2. Remove the screws (A) and the chart or night light faceplate (B) from the power column structure (see figure 4-10 on page 4-21).

Figure 4-10. Chart Light or Night Light Bulb Removal

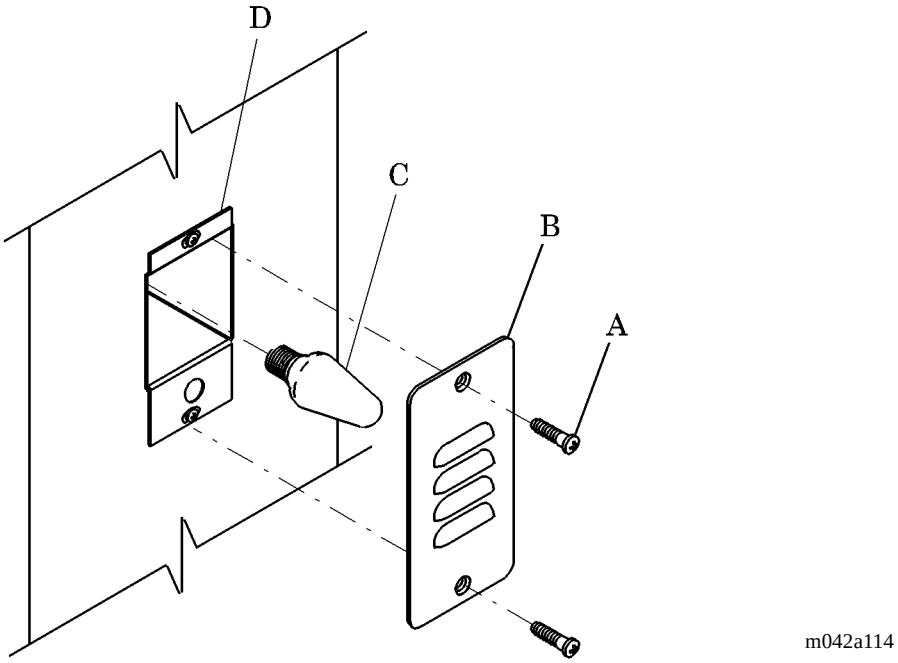

3. Remove the light bulb (C) from the bulb fixture (D).

Replacement

1. Install the new light bulb (C) in the bulb fixture (D).
2. Install the chart or night light faceplate (B) and screws (A) in the power column structure.
3. Remove the out-of-service tags, and turn the circuit breaker ON.
4. Check the chart light or night light for proper operation (see “Chart Light Does Not Come On” on page 2-5) or (see “Night Light Does Not Come On” on page 2-8).

4.9 STAT Clock/Timer

Tools required: Screwdriver
Phillips head screwdriver

Removal

SHOCK HAZARD:
To minimize the risk of electrical shock or damage to equipment, disconnect all electrical power to the system before working on it. Failure to do so could result in personal injury or equipment damage.

1. Perform the following:
   a. Locate the involved building standard/emergency circuit breaker panel.
   b. Set the involved circuit breaker (A) to OFF (see figure 4-1 on page 4-3).
   c. Lock out and tag out the breaker.
2. Remove the STAT clock/timer mounting screws (A) (see figure 4-11 on page 4-24).
3. Remove the STAT clock/timer (B) away from the pivot frame (C).
4. Record the positions of the color-coded wires on the STAT clock/ timer (B).
5. Loosen the terminal screws on the STAT clock/timer (B), and remove the wires.

Figure 4-11. STAT Clock/Timer Removal

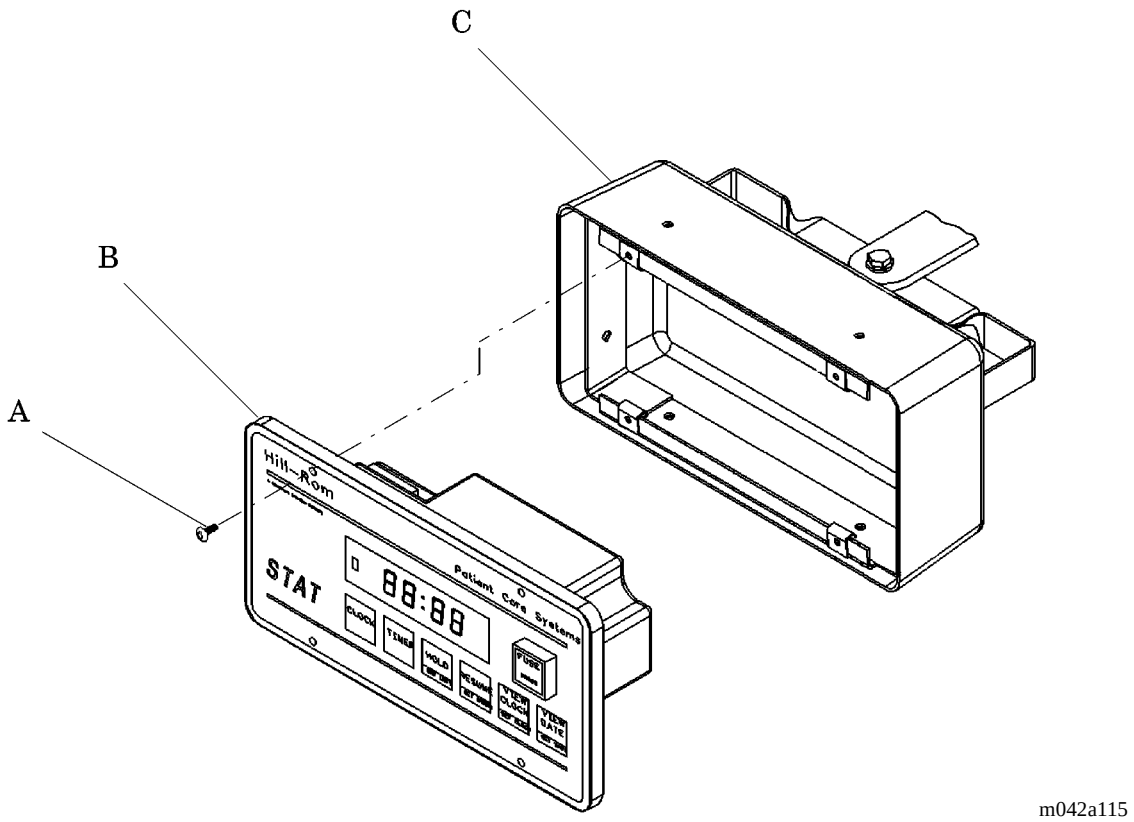

Replacement

1. Install the color-coded wires at their original terminals, and tighten the terminal screws on the STAT clock/timer (B).
2. Install the STAT clock/timer (B) and mounting screws (A) on the pivot frame (C). Tighten the STAT clockk/timer mounting screws (A).
3. Remove the out-of-service tags, and turn the circuit breaker ON.
4. Test the STAT clockk/timer for proper operation (see “STAT Clock/Timer Will Not Operate” on page 2-11).

4.10 Line Isolation Monitor

Tools required: Phillips head screwdriver

Removal

SHOCK HAZARD:
To minimize the risk of electrical shock or damage to equipment, disconnect all electrical power to the system before working on it. Failure to do so could result in personal injury or equipment damage.

1. Perform the following:
   a. Locate the involved building standard/emergency circuit breaker panel.
   b. Set the involved circuit breaker (A) to OFF (see figure 4-1 on page 4-3).
   c. Lock out and tag out the breaker.
2. Remove the line isolation monitor mounting screws (A) (see figure 4-12 on page 4-26).
3. Pull the line isolation monitor (B) away from the power column opening.
4. Remove the electrical connection to the line isolation monitor (B).

Figure 4-12. Line Isolation Monitor Removal

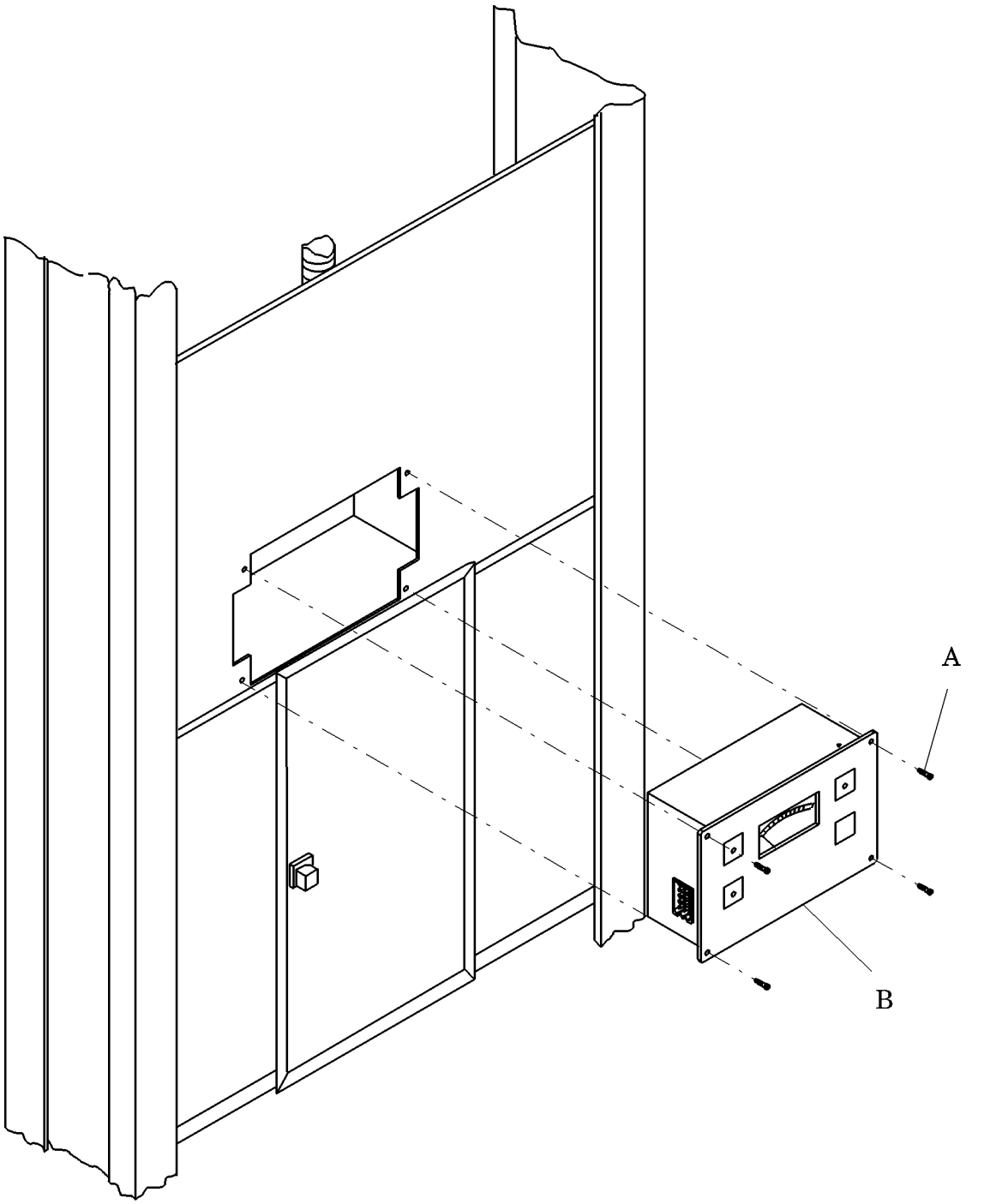

Replacement

1. Install the electrical connection to the line isolation monitor (B).
2. Install the line isolation monitor (B) and mounting screws (A). Tighten the line isolation monitor mounting screws (A).
3. Remove the out-of-service tags, and turn the circuit breaker ON.
4. Test the line isolation monitor for proper operation (see “The Line Isolation Monitor (LIM) Alarm Sounds” on page 2-13).

4.11 Circuit Breaker

Tools required: Screwdriver

Removal

SHOCK HAZARD:
To minimize the risk of electrical shock or damage to equipment, disconnect all electrical power to the system before working on it. Failure to do so could result in personal injury or equipment damage.

1. Perform the following:
   a. Locate the involved building standard/emergency circuit breaker panel.
   b. Set the involved circuit breaker (A) to OFF (see figure 4-1 on page 4-3).
   c. Lock out and tag out the breaker.
2. Note the position of the Power Column circuit breaker (A) to be replaced (see figure 4-13 on page 4-28).

4

Figure 4-13. Circuit Breaker (Standard/Emergency Power) Removal

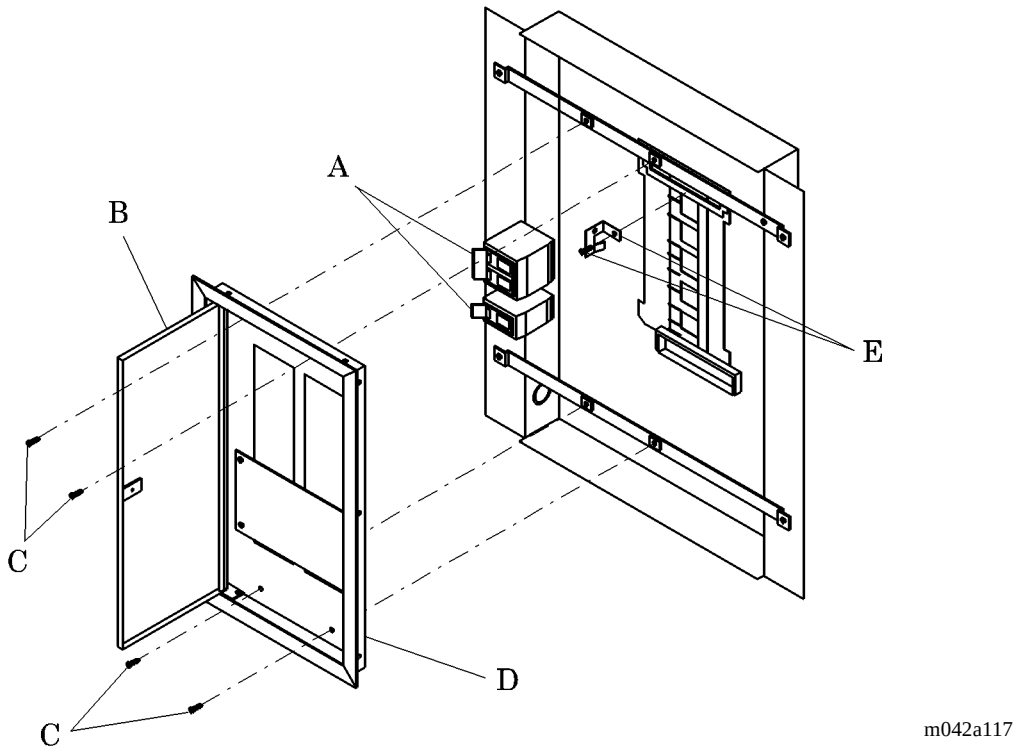

3. Open the breaker door (B), and remove the screws (C), and the dead front panel (D).

NOTE:
Step 4 is applicable only for the main circuit breaker.

4. Remove the screw and retaining kit (E) for the malfunctioning main circuit breaker (A).

5. Remove the malfunctioning circuit breaker (A) from the box.

6. Record the positions of the color-coded wires on the circuit breaker (A).

7. Remove one, two, or three wires from the one-pole, two-pole, or three-pole circuit breaker (A).

Replacement

1. Install the color-coded wires in the circuit breaker (A) in their original positions.

2. Install the circuit breaker (A), retaining kit (E) and screw, if equipped.

3. Install the dead front panel (D), screws (C), and close the breaker door (B).

4. Remove the out-of-service tags, and turn the building circuit breaker ON.

5. Check the Power Column circuit breaker for proper operation (see “Power Column Circuit Breaker Is Inoperative” on page 2-21).

4.12 Low Voltage Controller

Tools required: Screwdriver

Removal

SHOCK HAZARD:
To minimize the risk of electrical shock or damage to equipment, disconnect all electrical power to the system before working on it. Failure to do so could result in personal injury or equipment damage.

1. Perform the following:
   a. Locate the involved building standard/emergency circuit breaker panel.
   b. Set the involved circuit breaker (A) to OFF (see figure 4-1 on page 4-3).
   c. Lock out and tag out the breaker.
2. Remove the screws (A) and the mounting plate (B) from the power column (see figure 4-14 on page 4-31).
3. Record the positions of the color-coded wires on the low voltage controller (H).
4. Remove the wires from the low voltage controller (H).
5. Remove the cover (C) from the junction box (D).
6. Remove the screw (E), locknuts (F), and ground wire from the junction box (D).
7. Remove the mounting screws (G) and the low voltage controller (H) from the mounting plate (B).

Figure 4-14. Low Voltage Controller Removal

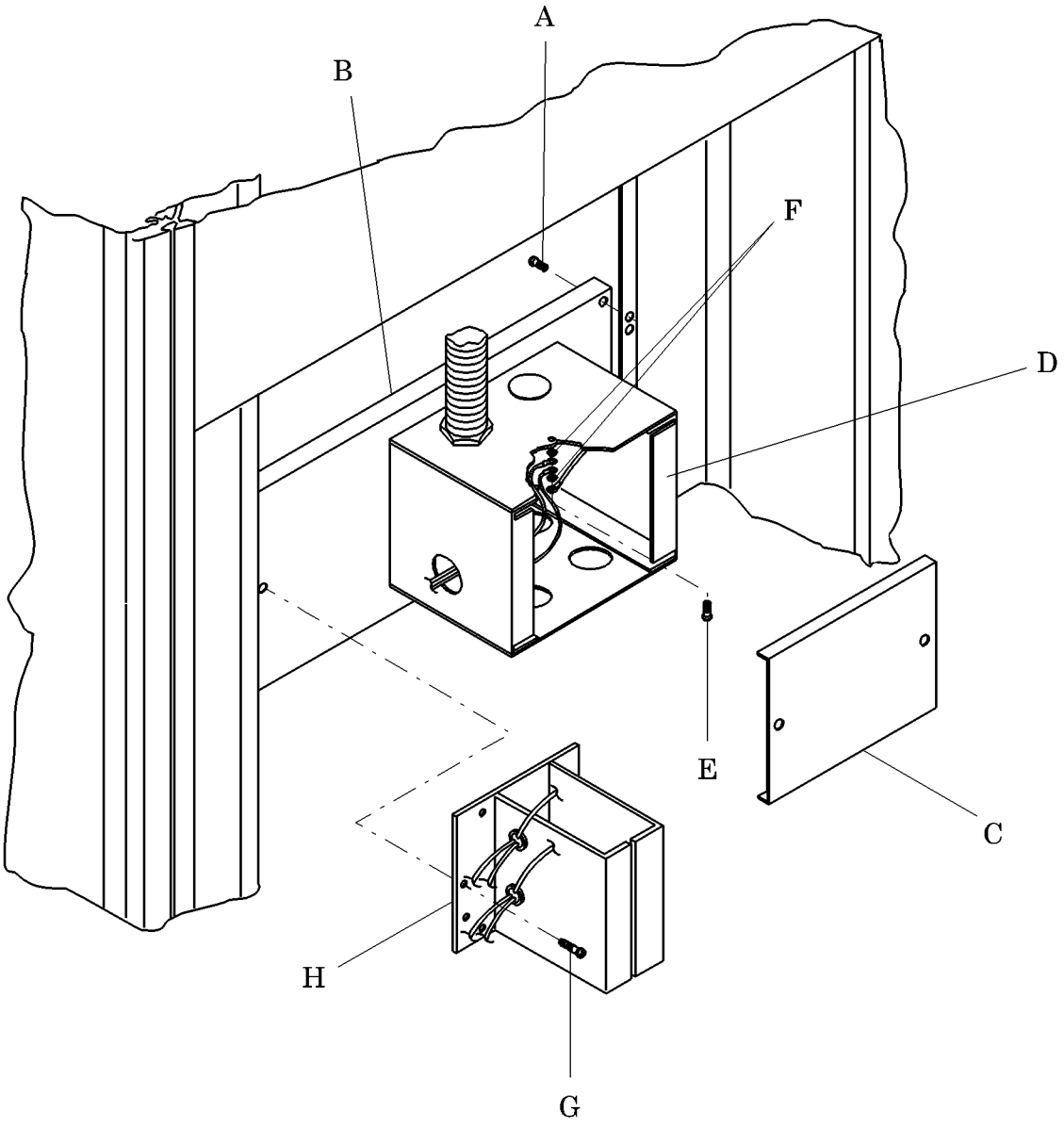

m042a118

Replacement

NOTE:
Before replacing the low voltage controller, check the following resistances between the output leads.

- 120V AC 500 Ohms, ± 100 Ohms
- 240V AC 1800 Ohms, ± 100 Ohms
- 277V AC 2500 Ohms, ± 100 Ohms

1. Install the low voltage controller (H) and the mounting screws (G) to the mounting plate (B).
2. Install the ground wire, the locknuts (F), and screw (E) on the junction box (D).
3. Install the cover (C) to the junction box (D).
4. Install the color-coded wires to the low voltage controller (H).
5. Install the mounting plate (B) and the screws (A) to the power column. Tighten the screws (A).
6. Remove the out-of-service tags, and turn the circuit breaker ON.
7. Test the low voltage controller (H) for power availability.

4.13 Shroud Assembly

Tools required: Screwdriver

Removal

SHOCK HAZARD:
To minimize the risk of electrical shock or damage to equipment, disconnect all electrical power to the system before working on it. Failure to do so could result in personal injury or equipment damage.

1. Perform the following:
   a. Locate the involved building standard/emergency circuit breaker panel.
   b. Set the involved circuit breaker (A) to OFF (see figure 4-1 on page 4-3).
   c. Lock out and tag out the breaker.
2. Remove the screws (A) and the front shroud (B) from the power column (see figure 4-15 on page 4-34).
3. Slide the front shroud (B) from the latch plate (F), and remove from the power column assembly.
4. Remove the screws (C) from the slide inserts (D) and rear shroud (E).

NOTE:
The slide inserts (D) will be loose in the accessory track.

5. Spread the sides of the right and left rear wrappers apart, and remove the rear shroud (E).

Figure 4-15. Shroud Assembly Removal

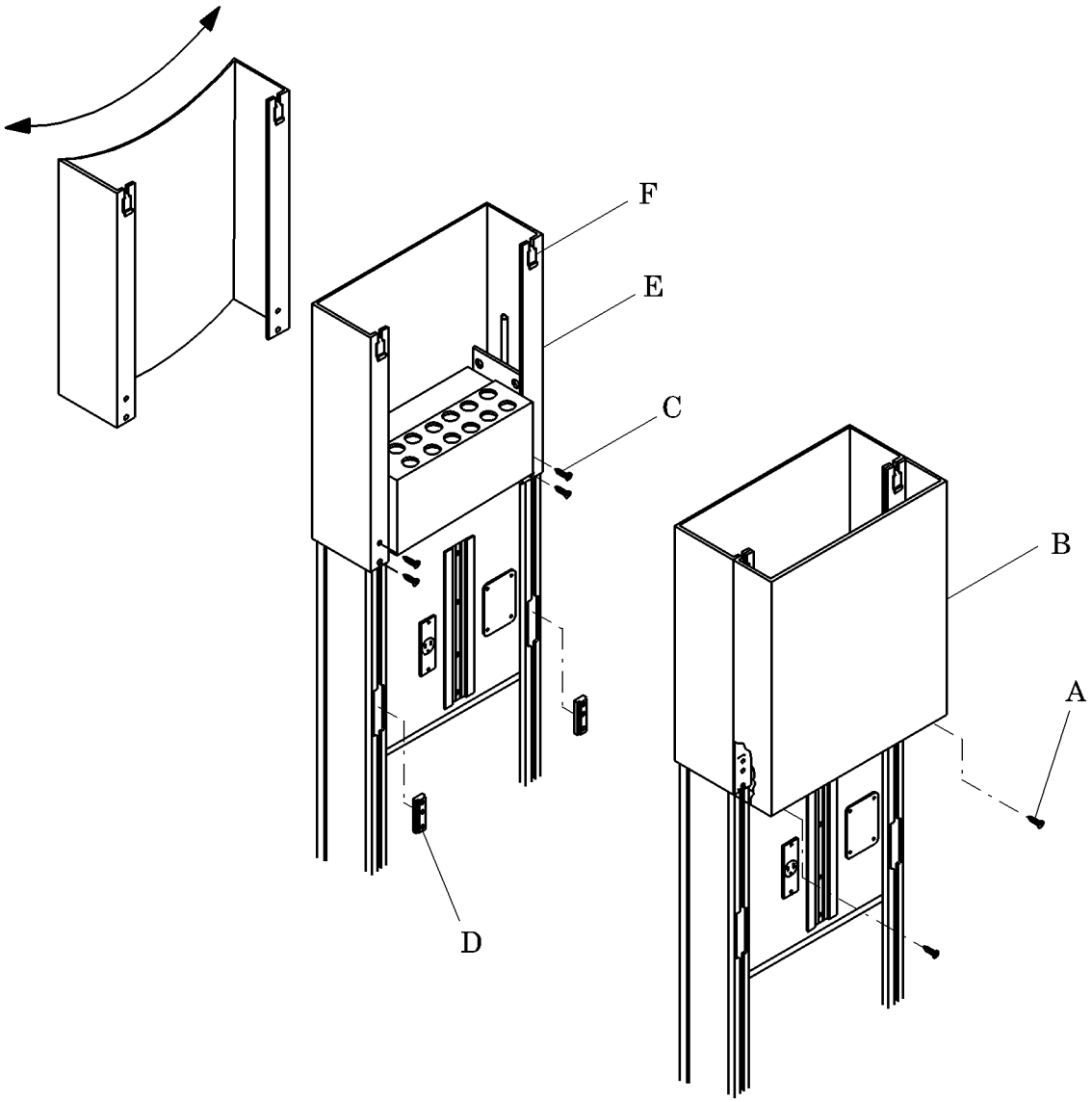

m042a120

Replacement

NOTE:
When installing the rear shroud, make sure the latch plates are toward the ceiling.

1. Spread the sides of the right and left rear wrappers apart, and install the rear shroud (E) on the power column.
2. Align the slide inserts (D) with the mounting holes in the rear shroud (E), and insert screws (C).
3. Raise the rear shroud (E) until it contacts the ceiling.
4. Tighten the screws (C).
5. Instal the front shroud (B) into the latch plates (F).
6. Install the screws (A) into the slide inserts. Tighten the screws (A).
7. Remove the out-of-service tags, and turn the circuit breaker ON.
8. Check that power has been restored to the power column.

4.14 Ceiling Ring

Tools required: Adjustable wrench set

Removal

SHOCK HAZARD:
To minimize the risk of electrical shock or damage to equipment, disconnect all electrical power to the system before working on it. Failure to do so could result in personal injury or equipment damage.

1. Perform the following:
   a. Locate the involved building standard/emergency circuit breaker panel.
   b. Set the involved circuit breaker (A) to OFF (see figure 4-1 on page 4-3).
   c. Lock out and tag out the breaker.
2. Remove all accessories and equipment from the power column and corner tracks prior to removal of the ceiling ring.
3. Remove the shroud assembly from the power column (see “Shroud Assembly” on page 4-33).

WARNING:
Provide additional support for the power column, during removal of the ceiling ring, to prevent movement. Personal injury or equipment damage could occur.

4. Remove the jam nut (A) from the jack stud assemblies (B) (see figure 4-16 on page 4-37).
5. Remove the bolts (C) and nuts (D) from the contractor supplied structural bracing (E).
6. Remove the ceiling ring (F) from the jack stud assemblies (B).
7. Hold or provide a support for the power column.

Figure 4-16. Ceiling Ring Removal

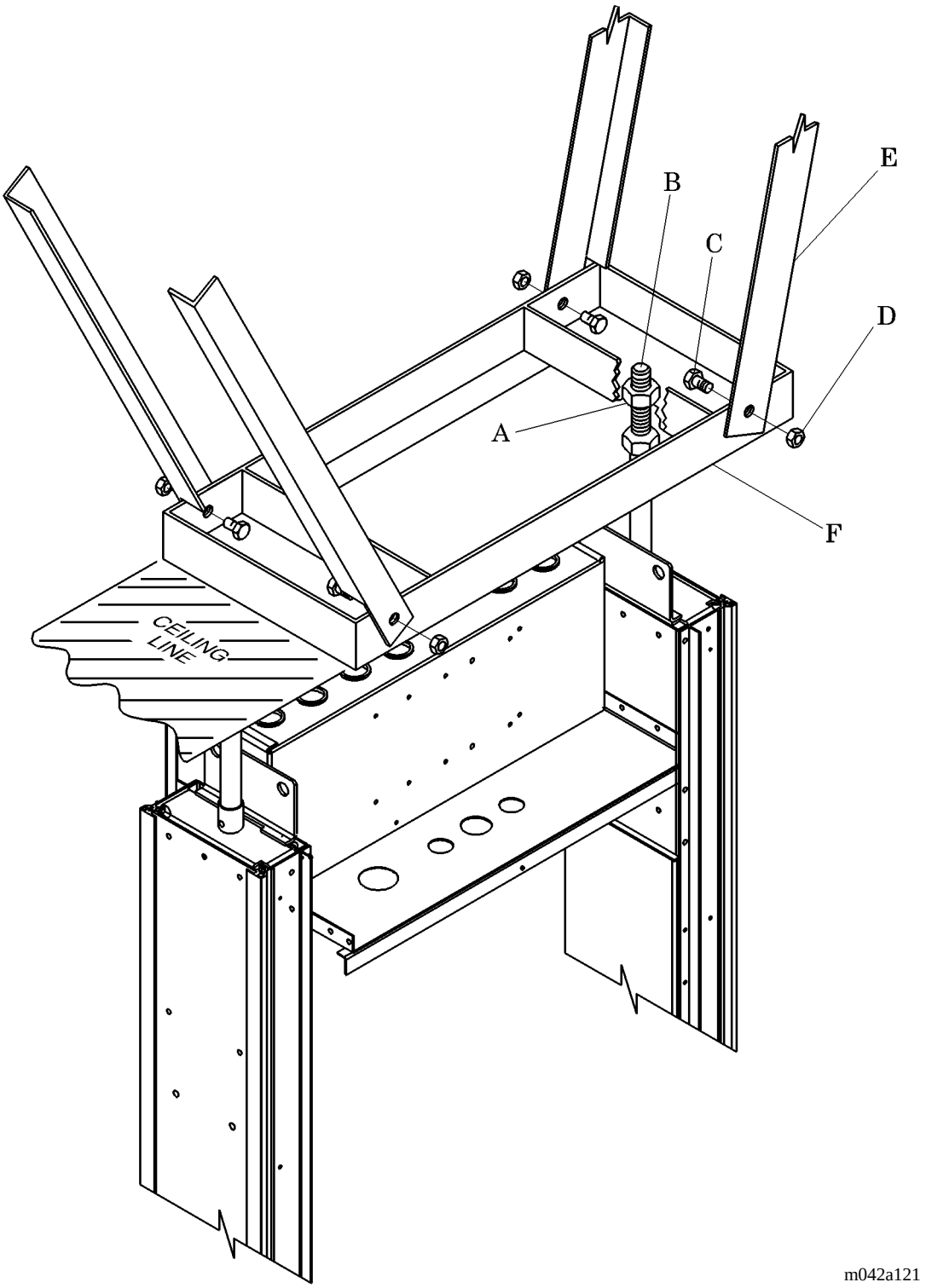

Replacement

1. Install the ceiling ring (F) onto the jack stud assemblies (B).
2. Install the contractor supplied structural bracing, nuts (D), and bolts (C) to the ceiling ring (F).
3. Install and tighten the jam nut (A) to the jack stud assembly (B).
4. Remove additional support from the power column.
5. Install the shroud assembly (see “Shroud Assembly” on page 4-33).
6. Remove the out-of-service tags, and turn the circuit breaker ON.
7. Check that power has been restored to the power column.

4.15 Front and Rear Laminate/Steel Panels

Tools required: Screwdriver

Removal

SHOCK HAZARD:
To minimize the risk of electrical shock or damage to equipment, disconnect all electrical power to the system before working on it. Failure to do so could result in personal injury or equipment damage.

1. Perform the following:
   a. Locate the involved building standard/emergency circuit breaker panel.
   b. Set the involved circuit breaker (A) to OFF (see figure 4-1 on page 4-3).
   c. Lock out and tag out the breaker.
2. Remove the shroud assembly from the power column (see “Shroud Assembly” on page 4-33).
3. Remove any items that interfere will the removal of the front or rear laminate/steel panels.

WARNING:
Hold any unsecured laminate/steel panels in place before removing the corner tracks. Once the corner tracks are removed these panels could fall. Personal injury or equipment damage could occur.

4. Remove the screws and corner tracks from the power column.
5. Remove the screws and laminate/steel panels from the power column.

Replacement

1. Install the screws and laminate/steel panels to the power column.
2. Install the laminated/steel panels, corner tracks, and screws to the power column.
3. Install any items removed prior to the removal of the laminate/steel panels.
4. Install the shroud assembly (see “Shroud Assembly” on page 4-33).

5. Remove the out-of-service tags, and turn the circuit breaker ON.
6. Check that power has been restored to the power column.

4.16 Side Laminate/Steel Panels

Tools required: Screwdriver

Removal

SHOCK HAZARD:
To minimize the risk of electrical shock or damage to equipment, disconnect all electrical power to the system before working on it. Failure to do so could result in personal injury or equipment damage.

1. Perform the following:
   a. Locate the involved building standard/emergency circuit breaker panel.
   b. Set the involved circuit breaker (A) to OFF (see figure 4-1 on page 4-3).
   c. Lock out and tag out the breaker.
2. Remove the shroud assembly from the power column (see “Shroud Assembly” on page 4-33).
3. Remove any items that interfere will the removal of the side laminate/steel panels.
4. Remove the right side panel by sliding the entire panel toward the back of the power column until the side panel edge is exposed.
5. Pull the right side panel from the rear corner track.
6. Remove the left side panel by sliding the entire panel toward the front of the power column until the side panel edge is exposed.
7. Pull the left side panel from the front corner track.

Replacement

1. Install the left side panel into the front corner track.
2. Slide the left side panel toward the rear of the power column until its edges are secure.
3. Install the right side panel into the rear corner track.

4. Slide the right side panel toward the front of the power column until its edges are secure.
5. Install any items removed prior to removal of the side panel.
6. Install the shroud assembly (see “Shroud Assembly” on page 4-33).
7. Remove the out-of-service tags, and turn the circuit breaker ON.
8. Check that power has been restored to the power column.

Chapter 5
Parts List

Chapter Contents

Warranty . . . . . 5 - 5
Service Parts Ordering . . . . . 5 - 7
Exchange Policy . . . . . 5 - 9
In-Warranty Exchanges . . . . . 5 - 9
Out-of-Warranty Exchanges . . . . . 5 - 9
Recommended Spare Parts . . . . . 5 - 10
Shop Drawings . . . . . 5 - 10
Basic Power Column, Grounded Power . . . . . 5 - 12
Basic Power Column, Isolated Power. . . . . 5 - 16
Ceiling Ring . . . . . 5 - 20
Shroud Assembly . . . . . 5 - 22
Single-gang Horizontal Channel. . . . . 5 - 28
Multi-gang Horizontal Channel . . . . . 5 - 30
Conduit Tiedown . . . . . 5 - 32
High Pressure Laminate/Steel Panels . . . . . 5 - 34
Base Cove Molding . . . . . 5 - 36
Monitor Mount . . . . . 5 - 38
Monitor Mount, 25" (63.5 cm). . . . . 5 - 40
STAT Clock/Timer Mount Provision . . . . . 5 - 42
Universal Gas Outlet Assembly . . . . . 5 - 44
Ohio Gas Outlet . . . . . 5 - 50
Allied Gas Outlet . . . . . 5 - 52
Oxequip Gas Outlet . . . . . 5 - 54

5

Nurse Call Provision . . . . . 5 - 56
Phone Provision . . . . . 5 - 58
Additional Ground Tie Point . . . . . 5 - 60
Fixed Bottle Slide . . . . . 5 - 62
SideCom Communication System Receptacle (37 Pin) . . . . . 5 - 64
SideCom Communication System Receptacle . . . . . 5 - 66
COMposer Communication System Bed Interface Unit . . . . . 5 - 68
One Gang Bed Interface Unit . . . . . 5 - 70
Timed Light Switch . . . . . 5 - 72
Telemate Receptacle . . . . . 5 - 74
Isolation Transformer . . . . . 5 - 76
Low Voltage Controller . . . . . 5 - 78
Low Voltage Switch . . . . . 5 - 80
Line Isolation Monitor . . . . . 5 - 82
Simplex and Hubbellock Outlet Receptacle . . . . . 5 - 84
Duplex Outlet Receptacle . . . . . 5 - 86
Double Simplex Outlet Receptacle . . . . . 5 - 88
Double Duplex Outlet Receptacle . . . . . 5 - 90
Ground Receptacle . . . . . 5 - 94
Line Voltage Switch . . . . . 5 - 96
Timed/Toggle Switch . . . . . 5 - 98
Conversion Kit, P991-00 Monitor Mount-P651C991 . . . . . 5 - 100
Pivoting Storage Basket-Shallow-P951S03 and Pivoting Waste Basket,
Deep-P951W03. 102
Basket, Large-P952L01 and Small Storage Basket-P952S01 104
Bottle Guard Bumper-P953-00. 106
Floor Mounted Bed Locator-P958-00. 108
Incandescent/Fluorescent Arm Lamp-P963C02. 110
Mount, Arm Light-M670E2511 and P963M00 112
STAT Clock/Timer Pod Mounted-P964B-00. 114
Mount Assembly-Exam Plus Light-P965M01 116

5

Universal Holder, Multipoint-P970A01 118
Bird Blender Mount-P973-B1 120
Utility Light-Track Mounted-P966A00 122
Sphygmomanometer Bracket, Aneroid-P975-01 124
Utility/Bottle Slide Mount-P973-01 126
Opthalmoscope Mount-P973-S1. 128
Utility Mount, Short Post-P972-01 and Long Post-P972L01. 130
Sphygmomanometer Mount, Mercurial-P974-01. 132
Infusion Pump/IV Holder-P984-00 134
Swivel Shelf, Stabilet Freestanding Infant Warmer-P986S01 136
Resuscitator Bag Holder-P1022PH 138
Circuit Breaker Panel 140
Night/Chart Light 144
Electrical Device Backbox 146

NOTES:

Warranty

HILL-ROM COMPANY, INC.
LIMITED WARRANTY

Hill-Rom Company, Inc. (Hill-Rom) has a long tradition of providing superior products and service to our customer. Our goal is “Total Customer Satisfaction”. In that spirit, Hill-Rom is proud to offer the following warranty.

GENERAL WARRANTY (APPLICABLE UNLESS A SPECIFIC WARRANTY IS LISTED)

Hill-Rom warrants to the original purchaser that its products and replacement parts shall be free from defects in material and workmanship for a period of one (1) year from date of delivery. Hill-Rom’s obligation under this warranty is expressly limited to supplying replacement parts and/or service for, or replacing, at its option, any product which is, in the sole discretion of Hill-Rom, found to be defective. In addition to the foregoing one year warranty, Hill-Rom warrants to the original purchaser that the frame and welds on its products will be free from structural defects for the life of the product. Any product upgrade or modification initiated by Hill-Rom does not affect the original product warranty.

SPECIFIC WARRANTIES

MATTRESS WARRANTIES

Hill-Rom warrants to the original purchaser that its mattress product shall be free from defects in material and workmanship for a period of two (2) years from date of delivery. However, electro mechanical mattress components (compressors, valves, printed circuit boards, hoses, and couplers) are covered by the general one (1) year warranty.

EXPENDABLES WARRANTIES

A sixty (60) day limited warranty from date of delivery applies to expendable parts such as cushions, coverlets, software diskettes, locator badge batteries, dome light incandescent bulbs, overhead fluorescent tubes, heating elements, temperature probes, filter sheets, and microspheres. This warranty is limited to replacement of the parts covered.

TO OBTAIN PARTS AND SERVICE

In the United States, call Hill-Rom Technical Support Department at (800) 445-3720, Monday through Friday. In Canada, call Hill-Rom Technical Support Department at (800) 267-2337, Monday through Friday. Outside the United States and Canada, call your authorized Hill-Rom Distributor. In order to expedite service, we request you furnish the following information: customer identification number, product model number, serial number, and description of problem. A qualified specialist will provide, via telephone (United States and Canada), or FAX (Outside the United States and Canada), troubleshooting assistance for facility personnel and provide necessary parts to make repairs. If troubleshooting determines the need for on-site technical service, a qualified service representative will be dispatched. Replacement of non-technical items will be the responsibility of the customer. If requested by Hill-Rom, products or parts for which a warranty claim is made shall be returned prepaid to Hill-Rom’s factory.

OUT OF WARRANTY EXCHANGE POLICY

After the expiration of the original warranty, upon request, Hill-Rom will ship as a replacement, components such as selected: motors and printed circuit boards, for like units returned to Hill-Rom by the original purchaser at a substantial savings. Please call Hill-Rom Technical Support Department for current pricing.

PARTS AVAILABILITY POLICY

Hill-Rom will offer parts for new and remanufactured products for ten (10) years from date of sale; for communications products for five (5) years from date of sale.

Note: Some original component parts and assemblies may not be available; functional equivalents may be substituted.

THE FOREGOING WARRANTIES ARE EXCLUSIVE AND IN LIEU OF ALL OTHER EXPRESS WARRANTIES AND IMPLIED WARRANTIES, INCLUDING BUT NOT LIMITED TO, THE IMPLIED WARRANTIES OF MERCHANTABILITY AND FITNESS OF PURPOSE. HILL-ROM’S OBLIGATION UNDER THESE WARRANTIES SHALL NOT INCLUDE ANY LIABILITY FOR LOSS OF PROFITS, DIRECT, INDIRECT OR CONSEQUENTIAL DAMAGES OR DELAYS. Some states, provinces, or countries do not allow the exclusion or limitation of incidental or consequential damages, so the above exclusion or limitation may not apply. Any improper or negligent use, any alterations or repairs not in accordance with Hill-Rom’s manuals or performed by others in such manner as in Hill-Rom’s sole judgment affects the product materially and adversely, shall void these warranties. These warranties do not cover failures due to misuse, abuse, neglect, or lack of routine maintenance. No employee or representative of Hill-Rom is authorized to change these warranties in any way or grant any other warranty unless in writing and signed by a Hill-Rom officer. These warranties provide specific legal rights; but, there may be other available rights, which vary from state to state, province to province, or country to country.

Revised April 17, 1997

NOTES:

5

Service Parts Ordering

Using the parts lists in this manual, identify the part number(s) you require. Find the product number and serial number on the product identification label (A) (see figure 5-1 on page 5-7).

Figure 5-1. Product Identification Label Location

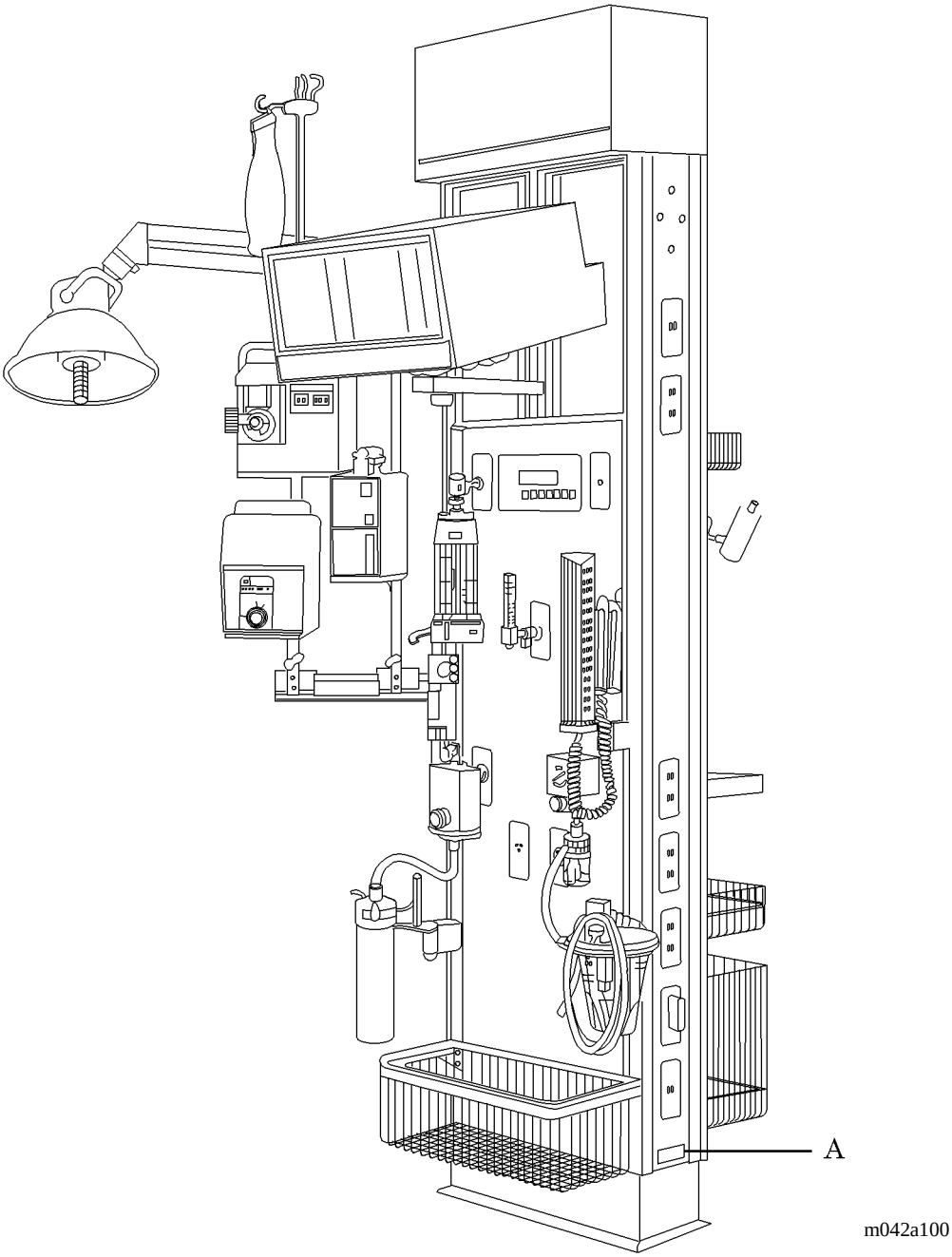

5

Call Hill-Rom Technical Support at (800) 445-3720 with the following information:

- Six-digit customer account number
- Purchase order number
- Product number
- Serial number
- Part number(s)

Hill-Rom also provides a fax number to promptly order parts, request part prices and availability, or follow up on a service order. The fax number is (812) 934-8472.

To order parts, a $40.00 minimum will prevent a charge for processing your order.

Terms:

- Net 30 days
- F.O.B. Batesville, IN
- Prepaid shipping charges added to invoice
- All orders shipped UPS ground unless specified

Address all inquiries to:

ATTN TECHNICAL SUPPORT—PARTS
HILL-ROM COMPANY
1069 STATE ROUTE 46 E
BATESVILLE IN 47006-9167

Address all return goods to:

ATTN SERVICE STORES
DISTRIBUTION CENTER DOOR D23
HILL-ROM COMPANY
COUNTY ROAD 300E
BATESVILLE IN 47006-9167

NOTE:
To eliminate possible delays or incorrect billings, **do not** return any items without a Return Material Authorization (RMA) number. When a return is requested, an RMA packet is included with each order. This packet includes an RMA number, instructions, and a shipping label. If an RMA number is not

available, obtain one by phoning Hill-Rom Technical Support at (800) 445-3720.

Exchange Policy

The following are Hill-Rom's policies for in-warranty and out-of-warranty exchanges.

In-Warranty Exchanges

In some cases, Hill-Rom will request that parts/products be returned for inspection. When this occurs, you are expected to return parts/products within 30 days of receipt of the exchange part. If you fail to return the inoperative parts/products within the 30 day period, Hill-Rom will invoice your facility for the full selling price of the parts/products.

NOTE:
The preceding billing procedure pertains **only** to parts/products that Hill-Rom requests to be returned.

In some cases, the invoice accompanying the parts will show the full selling price (only for Hill-Rom's internal use). Do not confuse this price with your price.

Do not return any parts without an RMA number. When parts/products have been requested to be returned, Hill-Rom will include an RMA packet with the parts/products shipment. If an RMA number is not available, obtain one by phoning Hill-Rom Technical Support at (800) 445-3720.

Out-of-Warranty Exchanges

You are expected to return the inoperative parts/products within 30 days of receipt of the exchange part. Hill-Rom will include an RMA packet with the parts/products shipment. If an RMA number is not available, obtain one by phoning Hill-Rom Technical Support at (800) 445-3720. If you fail to return the inoperative parts/products within 30 days, Hill-Rom will invoice your facility for the full selling price of the parts/products. Upon return of the inoperative parts/products, Hill-Rom will issue a credit for the discounted price.

Recommended Spare Parts

There are no recommended spare parts for the Power Column.

Shop Drawings

There are many variations to the basic Power Column. The units you have in your hospital contain unique, customer specific options, and provision placements. The set of shop drawings that you should have received from either Hill-Rom, the architect, or the contractor show exactly what options went into your units and where the provisions are placed. Keep these drawings in an accessible location for quick reference when ordering service parts or additional units. These drawings also include wiring diagrams for your units.

NOTES:

Basic Power Column, Grounded Power

Figure 5-2. Basic 950E Power Column, Grounded Power (Sheet 1 of 2)

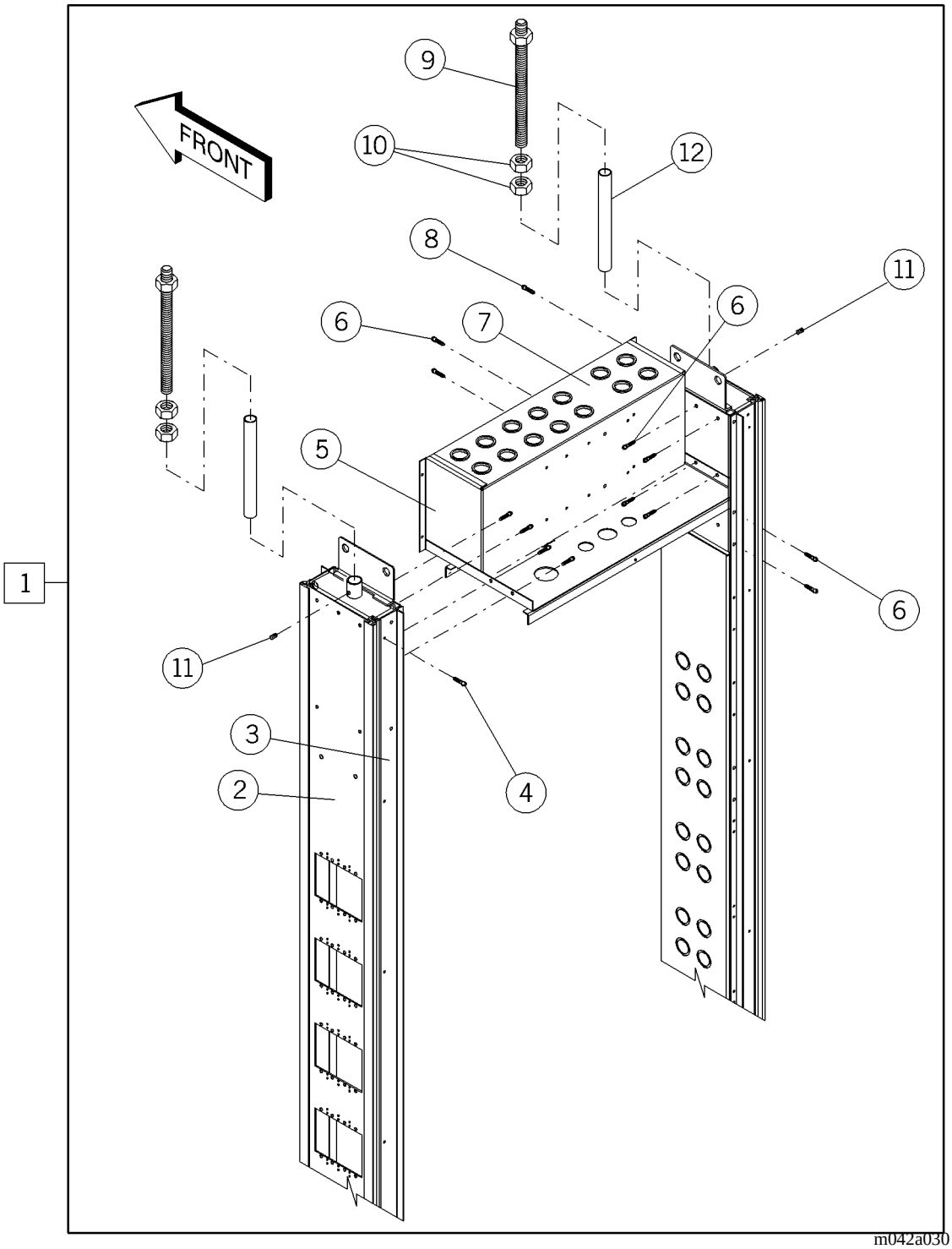

5

Table 5-1. Basic Power Column, Grounded Power (Sheet 1 of 2)

Item Number	Part Number	Quantity	Description
1	55572 (950E)	1	Skeleton assembly
2	56798 (950E)	2	Vertical chase assembly
3	52660 (950E)	4	Corner track
4	50891-06 (950E)	32	Screw
5	55573 (950E)	1	Spreader assembly
6	52555-03 (950E)	28	Screw
7	50043-39 (950E)	1	J-Box cover
8	393 (950E)	6	Screw
9	50028 (950E)	2	Jack screw
10	28293 (950E)	4	Nut
11	50060 (950E)	2	Setscrew
12	50047-1 (950E) or 50047-2 (950E) or 50047-3 (950E)	2	Guide tube, 8’ to 8’ 6" ceiling Guide tube, 8’ 6" to 9’ ceiling Guide tube, 9’ to 9’6" ceiling
13	54399 (950E)	1	Separator shelf
14	50030 (950E)	2	Pedestal cover
15	56674-01 (950E)	14	Screw
16	50068 (950E)	1	Pedestal/shelf assembly
17	56551 (950E)	1	Ground bar assembly
18	52243-07 (950E)	2	Screw
19	15250 (950E)	4	Locknut washerbase
20	SP31260 (950E)	2	NR conduit
21	15365 (950E)	4	Insulated connector
22	50075 (950E)	1	Brace

Figure 5-2. Basic Power Column, Grounded Power (Sheet 2 of 2)

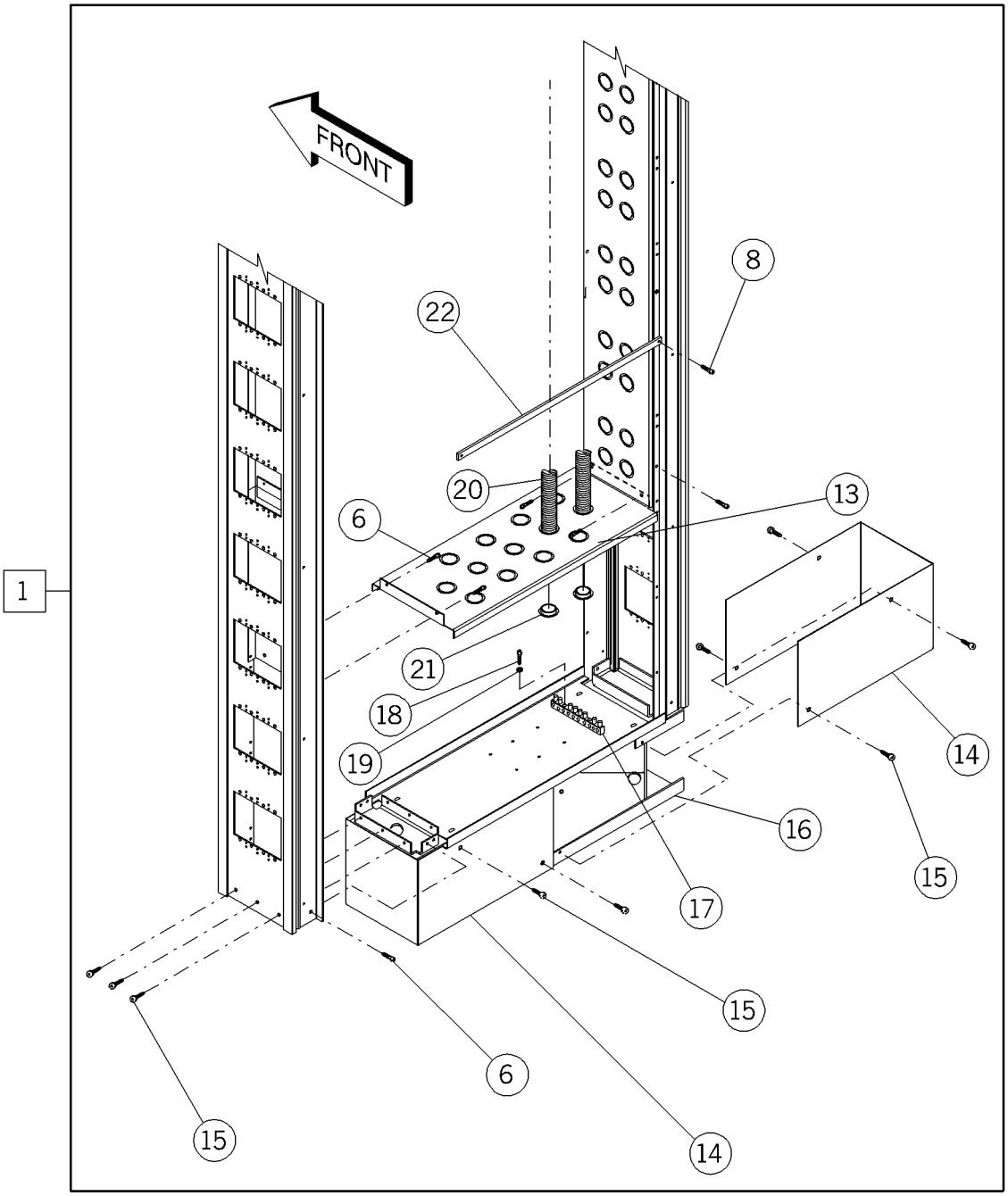

m042a031

Table 5-2. Basic Power Column, Grounded Power (Sheet 2 of 2)

Item Number	Part Number	Quantity	Description
1	55572 (950E)	1	Skeleton assembly
2	56798 (950E)	2	Vertical chase assembly
3	52660 (950E)	4	Corner track
4	50891-06 (950E)	32	Screw
5	55573 (950E)	1	Spreader assembly
6	52555-03 (950E)	28	Screw
7	50043-39 (950E)	1	J-Box cover
8	393 (950E)	6	Screw
9	50028 (950E)	2	Jack screw
10	28293 (950E)	4	Nut
11	50060 (950E)	2	Setscrew
12	50047-1 (950E) or 50047-2 (950E) or 50047-3 (950E)	2	Guide tube, 8’ to 8’ 6" ceiling Guide tube, 8’ 6" to 9’ ceiling Guide tube, 9’ to 9’6" ceiling
13	54399 (950E)	1	Separator shelf
14	50030 (950E)	2	Pedestal cover
15	56674-01 (950E)	14	Screw
16	50068 (950E)	1	Pedestal/shelf assembly
17	56551 (950E)	1	Ground bar assembly
18	52243-07 (950E)	2	Screw
19	15250 (950E)	4	Locknut washerbase
20	SP31260 (950E)	2	NR conduit
21	15365 (950E)	4	Insulated connector
22	50075 (950E)	1	Brace

Basic Power Column, Isolated Power

Figure 5-3. Basic 950E Power Column, Isolated Power (Sheet 1 of 2)

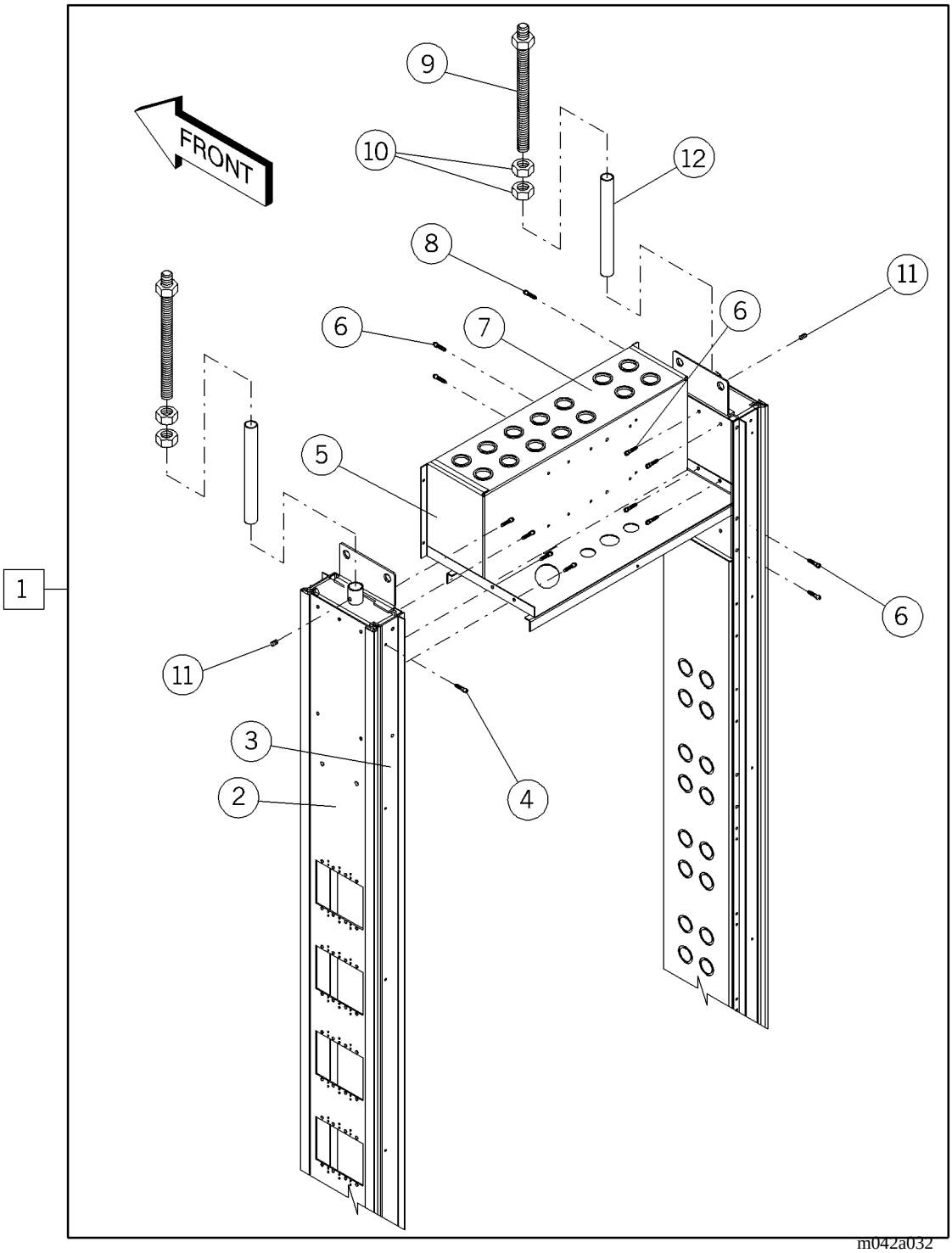

Table 5-3. Basic Power Column, Isolated Power (Sheet 1 of 2)

Item Number	Part Number	Quantity	Description
1	55576 (950E)	1	Skeleton assembly
2	55575 (950E)	2	Vertical chase assembly
3	52660 (950E)	4	Corner track
4	50891-06 (950E)	32	Screw
5	55577 (950E)	1	Spreader assembly
6	52555-03 (950E)	28	Screw
7	50043-39 (950E)	1	J-box cover
8	393 (950E)	11	Screw
9	50028 (950E)	2	Jack screw
10	28293 (950E)	4	Nut
11	50060 (950E)	2	Setscrew
12	50047-1 (950E) or 50047-2 (950E) or 50047-3 (950E)	2	Guide tube, 8’ to 8’ 6" ceiling Guide tube, 8’ 6" to 9’ ceiling Guide tube, 9’ to 9’6" ceiling
13	54399 (950E)	1	Separator shelf
14	50732 (950E)	1	Pedestal/transformer housing assembly
15	50731 (950E)	1	Cover
16	53506 (950E)	4	Bolt
17	3822 (950E)	8	Nut
18	635PL (950E)	8	Washer-plated
19	50730 (950E)	8	Shock pad
20	50030 (950E)	2	Pedestal cover
21	56674-01 (950E)	14	Screw
22	50736 (950E)	1	Conduit-breaker panel
23	50737 (950E)	1	Conduit j-box
24	15365 (950E)	4	Insulated connector

Figure 5-3. Basic 950E Power Column, Isolated Power (Sheet 2 of 2)

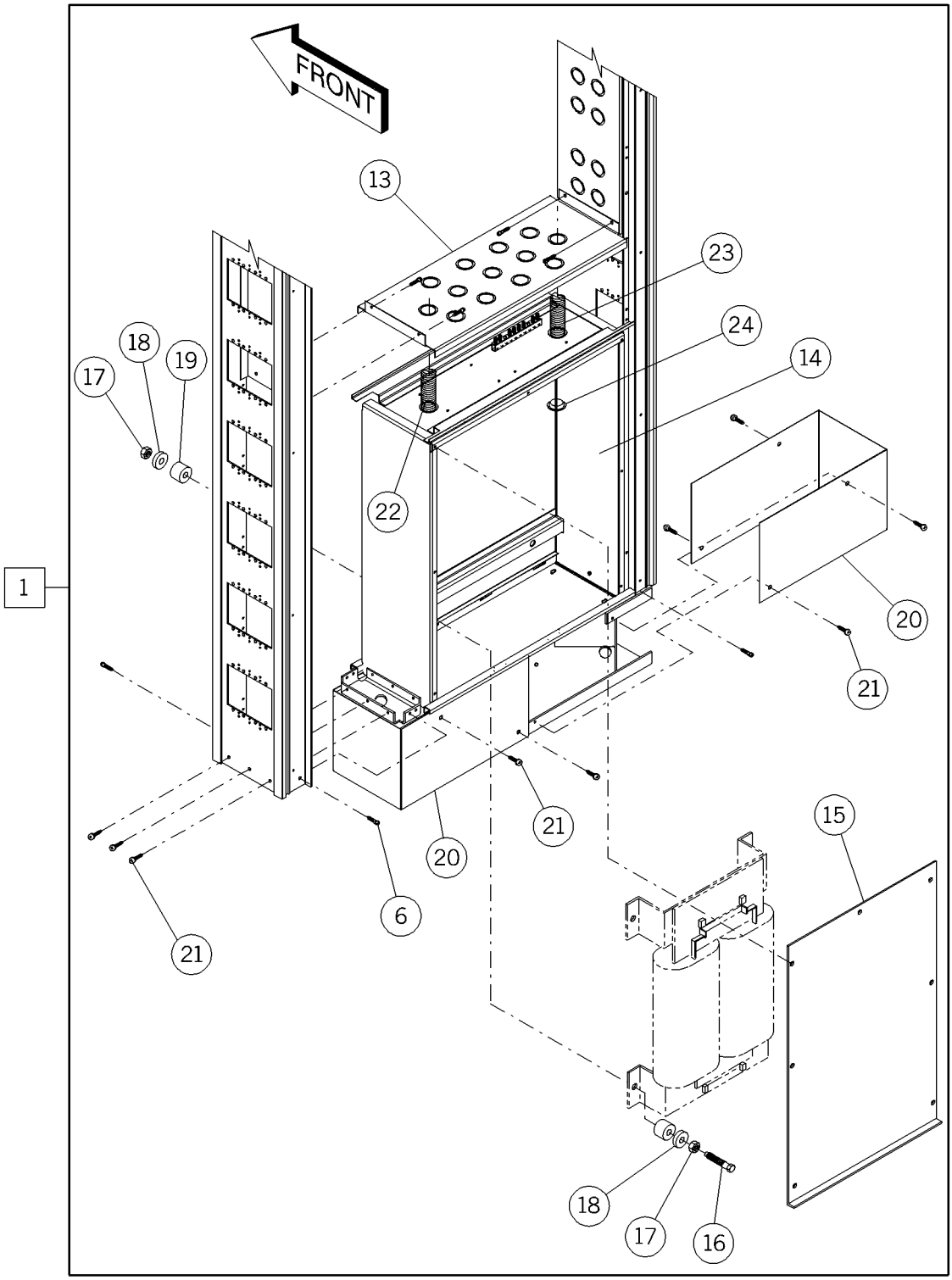

m042a033

5

Table 5-4. Basic Power Column, Isolated Power (Sheet 2 of 2)

Item Number	Part Number	Quantity	Description
1	55576 (950E)	1	Skeleton assembly
2	55575 (950E)	2	Vertical chase assembly
3	52660 (950E)	4	Corner track
4	50891-06 (950E)	32	Screw
5	55577 (950E)	1	Spreader assembly
6	52555-03 (950E)	28	Screw
7	50043-39 (950E)	1	J-box cover
8	393 (950E)	11	Screw
9	50028 (950E)	2	Jack screw
10	28293 (950E)	4	Nut
11	50060 (950E)	2	Setscrew
12	50047-1 (950E) or 50047-2 (950E) or 50047-3 (950E)	2	Guide tube, 8’ to 8’ 6" ceiling Guide tube, 8’ 6" to 9’ ceiling Guide tube, 9’ to 9’6" ceiling
13	54399 (950E)	1	Separator shelf
14	50732 (950E)	1	Pedestal/transformer housing assembly
15	50731 (950E)	1	Cover
16	53506 (950E)	4	Bolt
17	3822 (950E)	8	Nut
18	635PL (950E)	8	Washer-plated
19	50730 (950E)	8	Shock pad
20	50030 (950E)	2	Pedestal cover
21	56674-01 (950E)	14	Screw
22	50736 (950E)	1	Conduit-breaker panel
23	50737 (950E)	1	Conduit j-box
24	15365 (950E)	4	Insulated connector

Ceiling Ring

Figure 5-4. Ceiling Ring

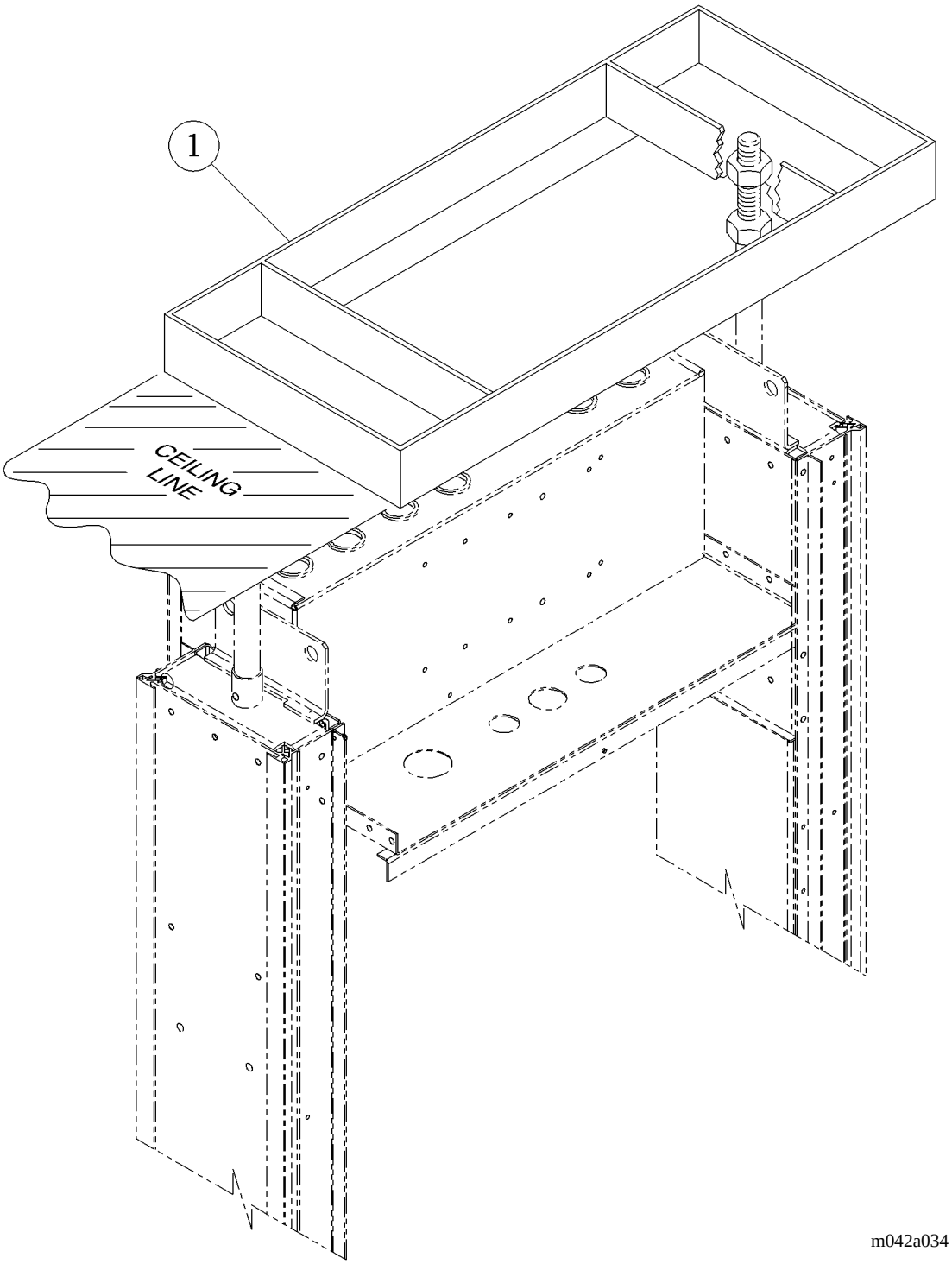

Table 5-5. Ceiling Ring

Item Number	Part Number	Quantity	Description
1	959E (950E) or 50011 (950E)	1	Hanger bracket Ceiling ring

Shroud Assembly

Figure 5-5. Shroud Assembly

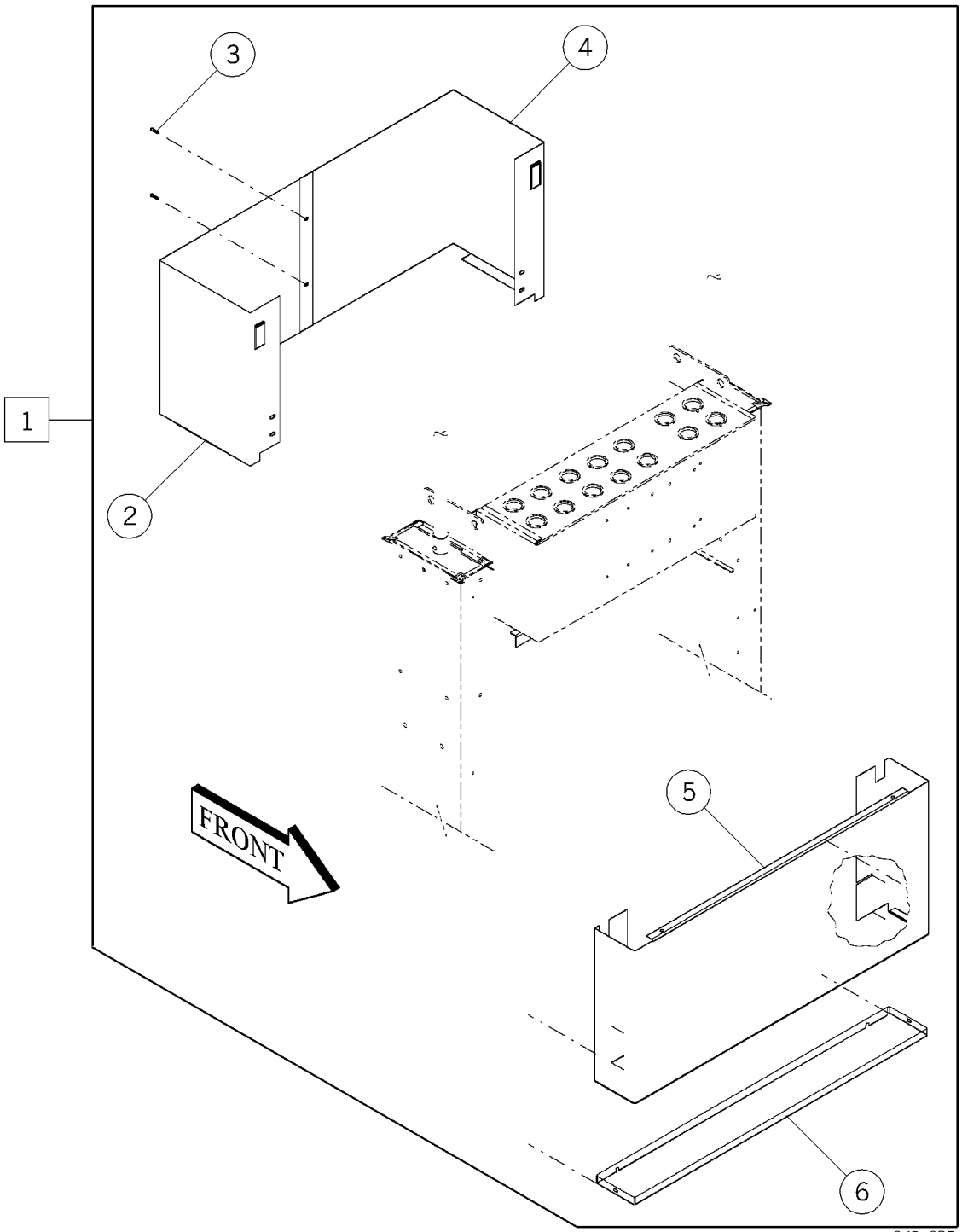

m042a035

Table 5-6. Shroud Assembly

Item Number	Part Number	Quantity	Description
1	950E13-21 (950E)	1	Shroud set 8’ 0" ceiling
	or		
	950E1322 (950E)		Shroud set 8’ 1" ceiling
	or		
	950E1323 (950E)		Shroud set 8’ 2" ceiling
	or		
	950E1324 (950E)		Shroud set 8’ 3" ceiling
	or		
	950E1325 (950E)		Shroud set 8’ 4" ceiling
	or		
	950E1326 (950E)		Shroud set 8’ 5" ceiling
	or		
	950E1327 (950E)		Shroud set 8’ 6" ceiling
	or		
	950E1328 (950E)		Shroud set 8’ 7" ceiling
	or		
	950E13-29 (950E)		Shroud set 8’ 8" ceiling
	or		
	950E1330 (950E)		Shroud set 8’ 9" ceiling
	or		
	950E1331 (950E)		Shroud set 8’ 10" ceiling
	or		
	950E1332 (950E)		Shroud set 8’ 11" ceiling
	or		
	950E1333 (950E)		Shroud set 9’ 0" ceiling
	or		
	950E1334 (950E)		Shroud set 9’ 1" ceiling
	or		
	950E1335 (950E)		Shroud set 9’ 2" ceiling
	or		
	950E1336 (950E)		Shroud set 9’ 3" ceiling
	or		
	950E1337 (950E)		Shroud set 9’ 4" ceiling
	or		
	950E1338 (950E)		Shroud set 9’ 5" ceiling
	or		
	950E1339 (950E)		Shroud set 9’ 6" ceiling*

* Verify ceiling height prior to ordering shroud assemblies for units used in rooms with ceiling height greater than 9’ 6".

5

Item Number	Part Number	Quantity	Description
2	5730401 (950E)	1	Wrapper, right rear 10 1/2"
	or		
	5730402 (950E)		Wrapper, right rear 11 1/2"
	or		
	5730403 (950E)		Wrapper, right rear 12 1/2"
	or		
	5730404 (950E)		Wrapper, right rear 13 1/2"
	or		
	5730405 (950E)		Wrapper, right rear 14 1/2"
	or		
	5730406 (950E)		Wrapper, right rear 15 1/2"
	or		
	5730407 (950E)		Wrapper, right rear 16 1/2"
	or		
	5730408 (950E)		Wrapper, right rear 17 1/2"
	or		
	5730409 (950E)		Wrapper, right rear 18 1/2"
	or		
	5730410 (950E)		Wrapper, right rear 19 1/2"
	or		
	5730411 (950E)		Wrapper, right rear 20 1/2"
	or		
	5730412-39 (950E)		Wrapper, right rear 21 1/2"
	or		
	5730413 (950E)		Wrapper, right rear 22 1/2"
	or		
	5730414 (950E)		Wrapper, right rear 23 1/2"
	or		
	5730415 (950E)		Wrapper, right rear 24 1/2"
	or		
	5730416 (950E)		Wrapper, right rear 25 1/2"
	or		
	5730417 (950E)		Wrapper, right rear 26 1/2"
	or		
	5730418 (950E)		Wrapper, right rear 27 1/2"
	or		
	5730419 (950E)		Wrapper, right rear 28 1/2" *

* Verify ceiling height prior to ordering shroud assemblies for units used in rooms with ceiling height greater than 9’6"

Item Number	Part Number	Quantity	Description
3	5730501 (950E) or 5730502 (950E) or 5730503 (950E) or 5730504 (950E) or 5730505 (950E) or 5730506 (950E) or 5730507 (950E) or 5730508 (950E) or 5730509 (950E) or 5730510 (950E) or 5730511 (950E) or 5730512-39 (950E) or 5730513 (950E) or 5730514 (950E) or 5730515 (950E) or 5730516 (950E) or 5730517 (950E) or 5730518 (950E) or 5730519 (950E)	1	Wrapper, left rear 10 1/2" Wrapper, left rear 11 1/2" Wrapper, left rear 12 1/2" Wrapper, left rear 13 1/2" Wrapper, left rear 14 1/2" Wrapper, left rear 15 1/2" Wrapper, left rear 16 1/2" Wrapper, left rear 17 1/2" Wrapper, left rear 18 1/2" Wrapper, left rear 19 1/2" Wrapper, left rear 20 1/2" Wrapper, left rear 21 1/2" Wrapper, left rear 22 1/2" Wrapper, left rear 23 1/2" Wrapper, left rear 24 1/2" Wrapper, left rear 25 1/2" Wrapper, left rear 26 1/2" Wrapper, left rear 27 1/2" Wrapper, left rear 28 1/2" *
4	50891-02 (950E)	2	Screw

* Verify ceiling height prior to ordering shroud assemblies for units used in rooms with ceiling height greater than 9’6".

Item Number	Part Number	Quantity	Description
5	57268-01-39 (950E)	1	Shroud, front 10 1/2"
	or		
	5726802 (950E)		Shroud, front 11 1/2"
	or		
	5726803 (950E)		Shroud, front 12 1/2"
	or		
	5726804 (950E)		Shroud, front 13 1/2"
	or		
	5726805 (950E)		Shroud, front 14 1/2"
	or		
	5726806 (950E)		Shroud, front 15 1/2"
	or		
	5726807 (950E)		Shroud, front 16 1/2"
	or		
	5726808 (950E)		Shroud, front 17 1/2"
	or		
	5726809 (950E)		Shroud, front 18 1/2"
	or		
	5726810 (950E)		Shroud, front 19 1/2"
	or		
	5726811 (950E)		Shroud, front 20 1/2"
	or		
	572681239 (950E)		Shroud, front 21 1/2"
	or		
	5726813 (950E)		Shroud, front 22 1/2"
	or		
	5726814 (950E)		Shroud, front 23 1/2"
	or		
	57268-15-39 (950E)		Shroud, front 24 1/2"
	or		Shroud, front 25 1/2"
	5726816 (950E)		
	or		Shroud, front 26 1/2"
	5726817 (950E)		
	or		Shroud, front 27 1/2"
	5726818 (950E)		
	or		Shroud, front 28 1/2" *
	57268-19-39 (950E)		
6	53299 (950E)	1	Shroud bottom

* Verify ceiling height prior to ordering shroud assemblies for units used in rooms with ceiling height greater than 9’ 6".

NOTES:

Single-gang Horizontal Channel

Figure 5-6. Single-gang Horizontal Channel

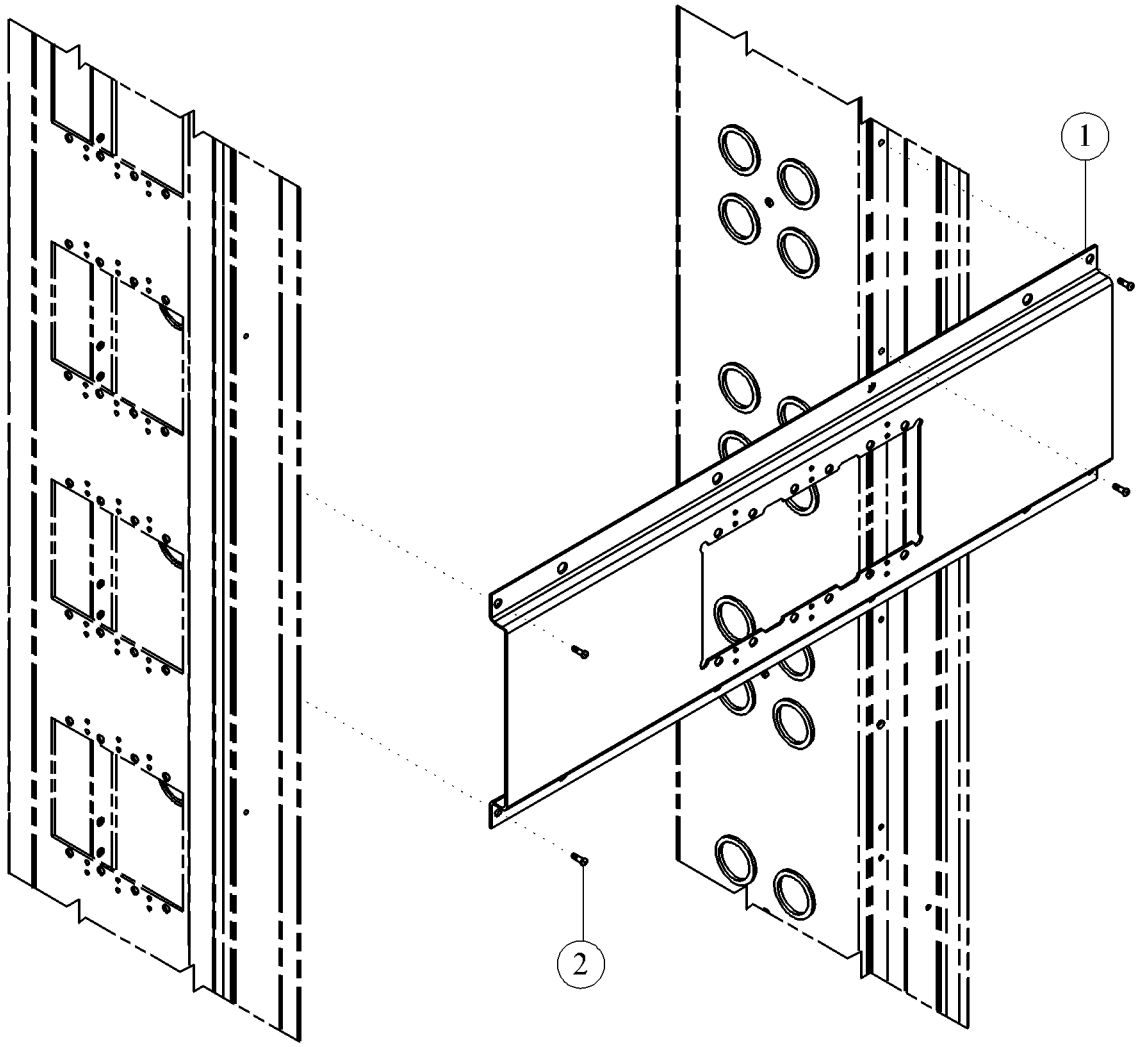

m042a037

Table 5-7. Single-gang Horizontal Channel

Item Number	Part Number	Quantity	Description
1	53112 (950E)	1	Horizontal single-gang
2	393 (950E)	4	Screw

Multi-gang Horizontal Channel

Figure 5-7. Multi-gang Horizontal Channel

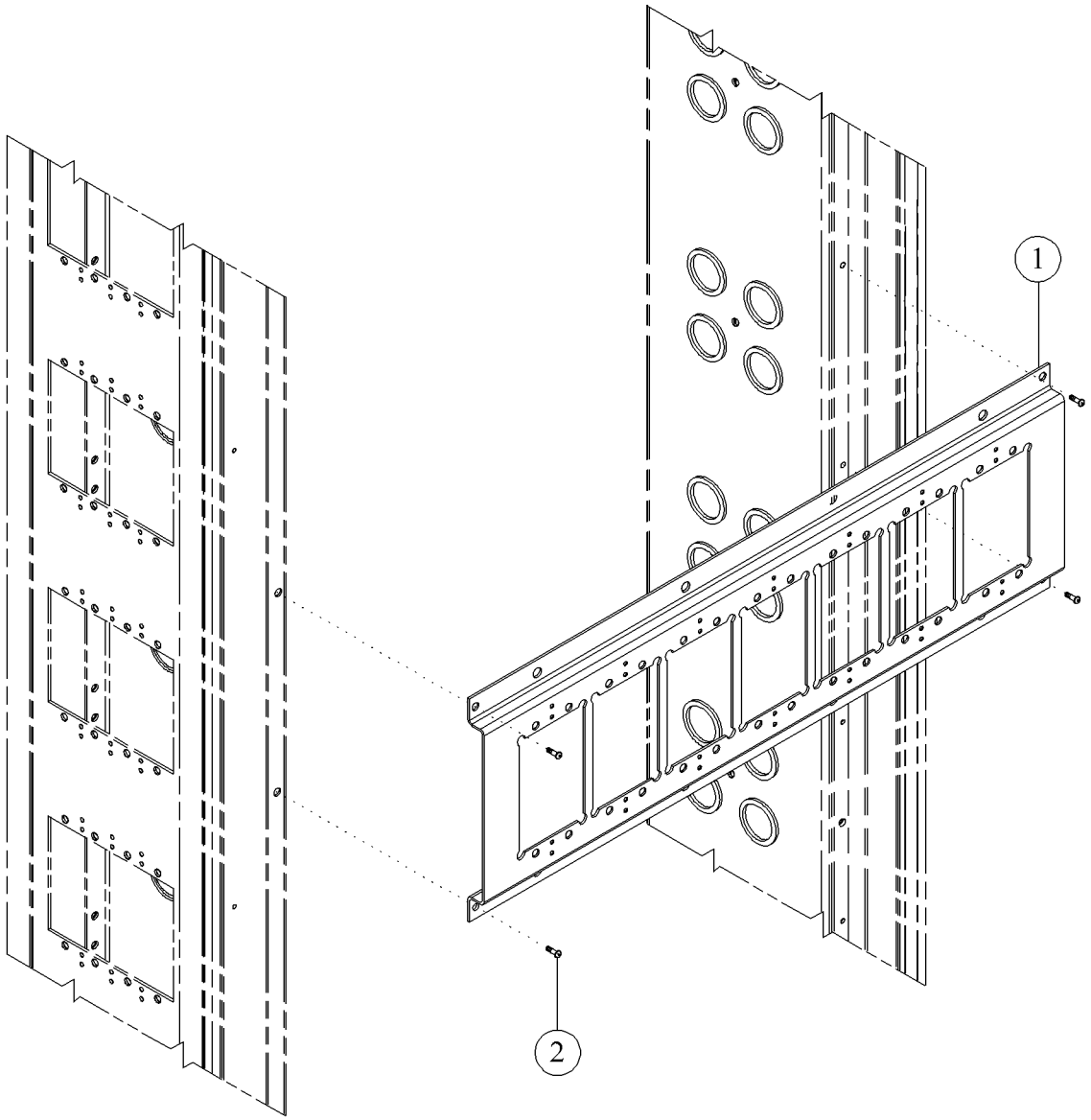

Table 5-8. Multi-gang Horizontal Channel

Item Number	Part Number	Quantity	Description
1	SP358 (950E)	1	Multi-gang horizontal
2	393 (950E)	4	Screw

Conduit Tiedown

Figure 5-8. Conduit Tiedown

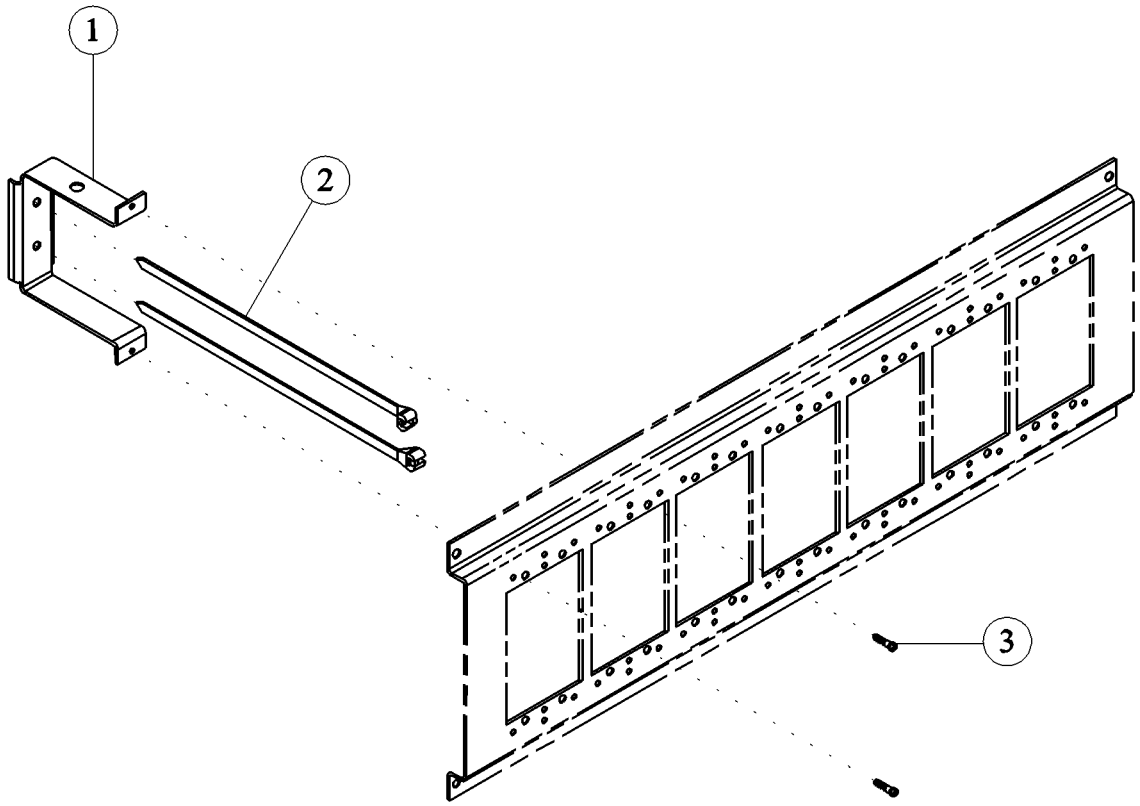

m042a039

Table 5-9. Conduit Tiedown

Item Number	Part Number	Quantity	Description
1	55370 (950E)	1	Standoff, conduit
2	59028 (950E)	2	Conduit tie-down strap
3	16115 (950E)	2	Screw

High Pressure Laminate/Steel Panels

Figure 5-9. High Pressure Laminate/Steel Panels

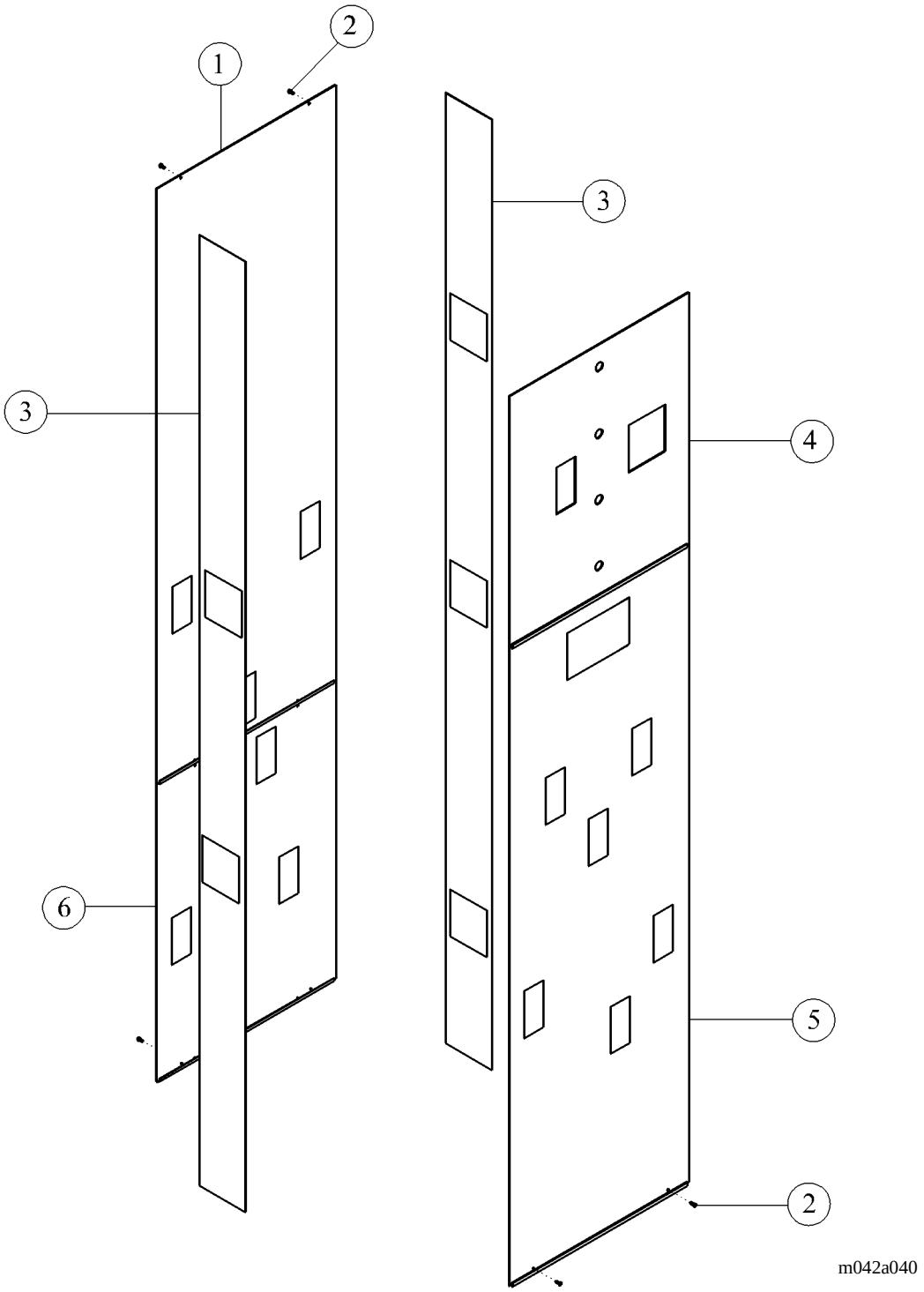

Table 5-10. High Pressure Laminate/Steel Panels

Item Number	Part Number	Quantity	Description
1	SP379 (950E)*	1	Upper rear panel, punched**
2	5294502 (950E)	6	Screw
3	SP441 (950E)*	2	Side fascia, punched **
4	SP354 (950E)*	1	Monitor panel**
5	SP353 (950E)*	1	Gas panel assembly**
6	SP398 (950E)*	1	Lower rear panel, punched**

* Specify high pressure laminate color.
** Supply punch-out locations when ordering panel assemblies and side fascias (see as built drawings).

5

Base Cove Molding

Figure 5-10. Base Cove Molding

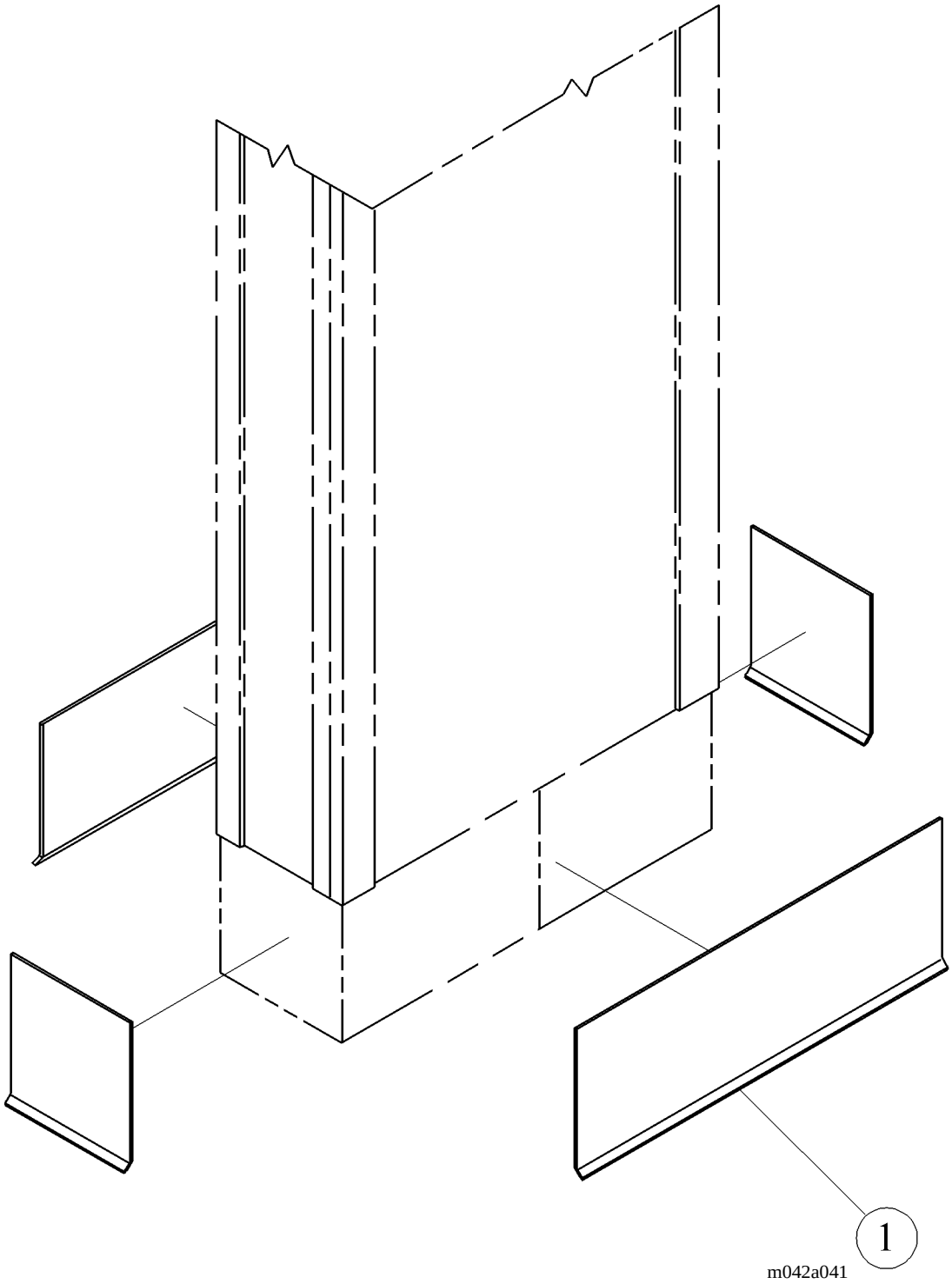

Table 5-11. Base Cove Molding

Item Number	Part Number	Quantity	Description
1	55726 (950E)	1	6" base cove molding

Monitor Mount

Figure 5-11. Monitor Mount

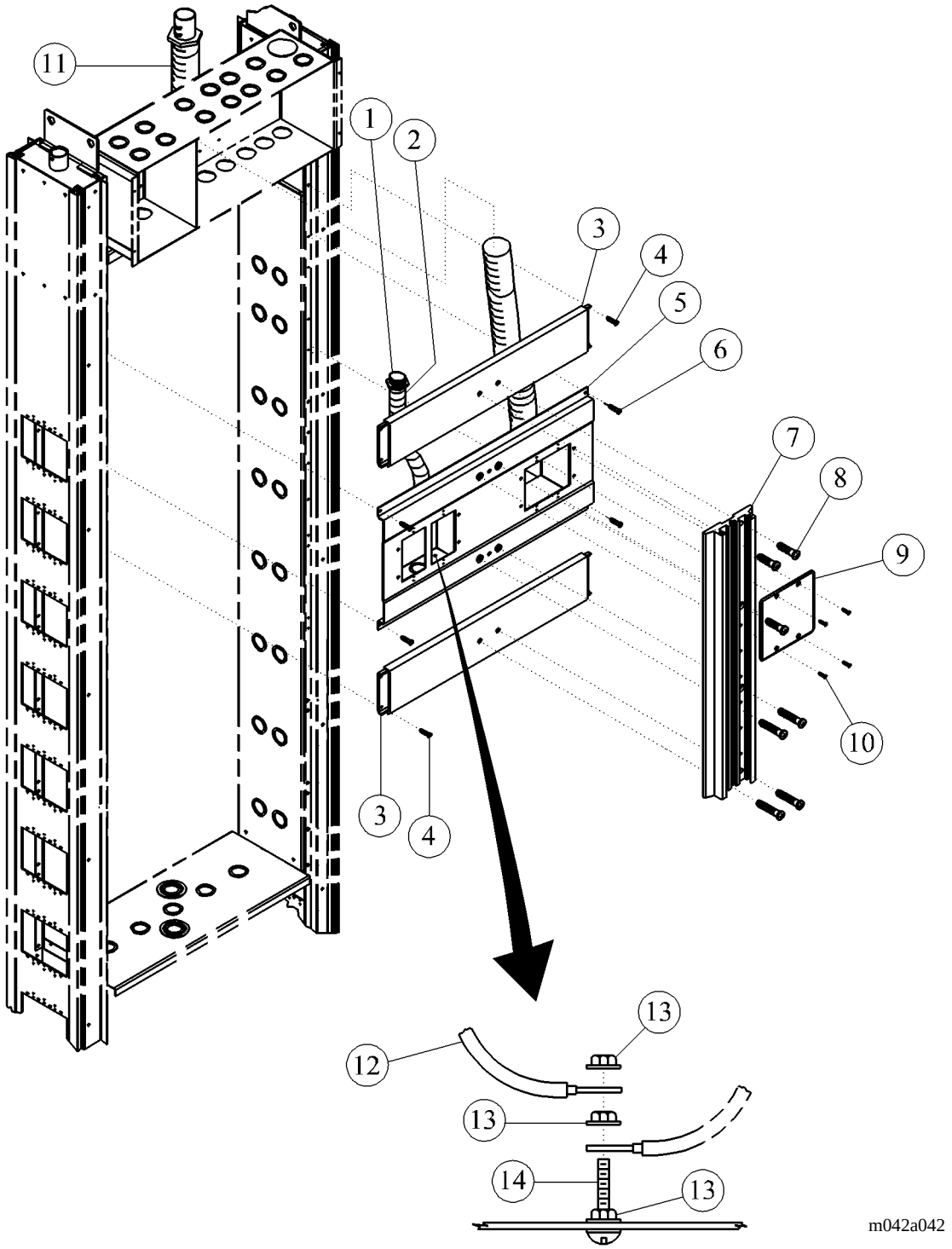

5

Table 5-12. Monitor Mount

Item Number	Part Number	Quantity	Description
1	15365 (950E)	2	Insulated connector (used on monitor mount without breaker panel)
2	SP312-16 (950E)	1	Conduit 3/4" (used on monitor mount without breaker panel)
3	56910 (950E)	2	Support assembly, monitor
4	52555-04 (950E)	8	Screw
5	56913 (950E)	1	Monitor sub-panel assembly
6	52555-03 (950E)	4	Screw
7	56896	1	Monitor mounting channel
8	56546-01 (950E) or 5654603 (950E)	8	Screw (used on monitor mount without breaker panel) Screw (used on monitor mount with breaker panel)
9	50592 (950E)	1	Faceplate blank—2 gang
10	50590 (950E)	4	Screw
11	26737 (950E)	1	Conduit coupling
12	51760-09 (950E)	1	Wire lead, green
13	15250 (950E)	3	Locknut washer base
14	52243-05 (950E)	1	Screw

Monitor Mount, 25" (63.5 cm)

Figure 5-12. Monitor Mount, 25" (63.5 cm)

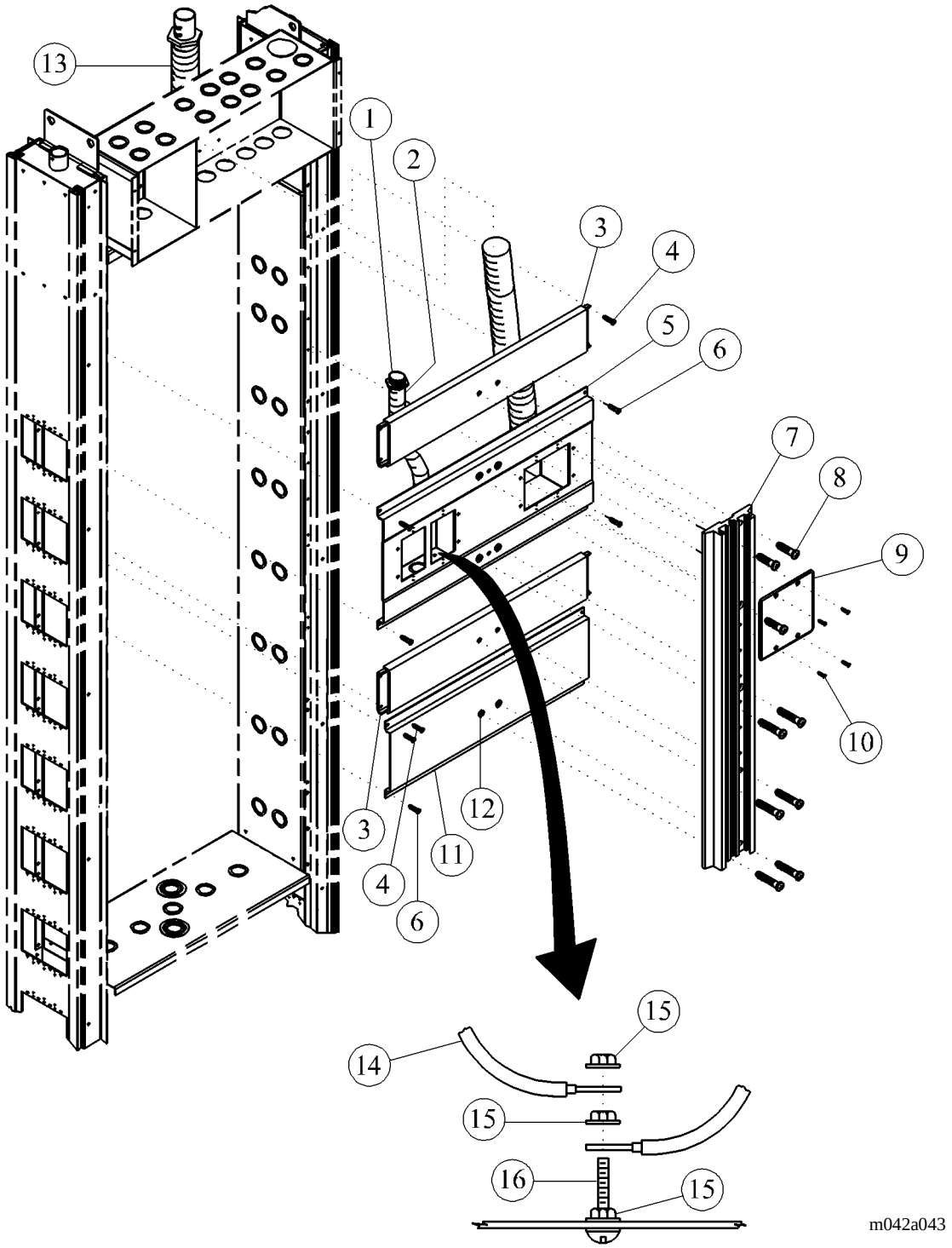

Table 5-13. Monitor Mount, 25" (63.5 cm)

Item Number	Part Number	Quantity	Description
1	15365 (950E)	2	Insulated connector
2	SP31216 (950E)	1	Conduit 3/4"
3	56910 (950E)	2	Support assembly, monitor
4	52555-04 (950E)	8	Screw
5	56913 (950E)	1	Monitor sub-panel assembly
6	5255503 (950E)	8	Screw
7	58794 (950E)	1	Monitor mount channel
8	56546-03 (950E)	8	Screw
9	50592 (950E)	1	Faceplate blank—2 gang
10	50590 (950E)	4	Screw
11	SP358 (950E)	1	Multi-gang horizontal
12	29064 (950E)	2	Rivet
13	26737 (950E)	1	Conduit coupling
14	51760-09 (950E)	1	Wire lead, green
15	15250 (950E)	3	Nut
16	52243-05 (950E)	1	Screw

STAT Clock/Timer Mount Provision

Figure 5-13. STAT Clock/Timer Mount Provision

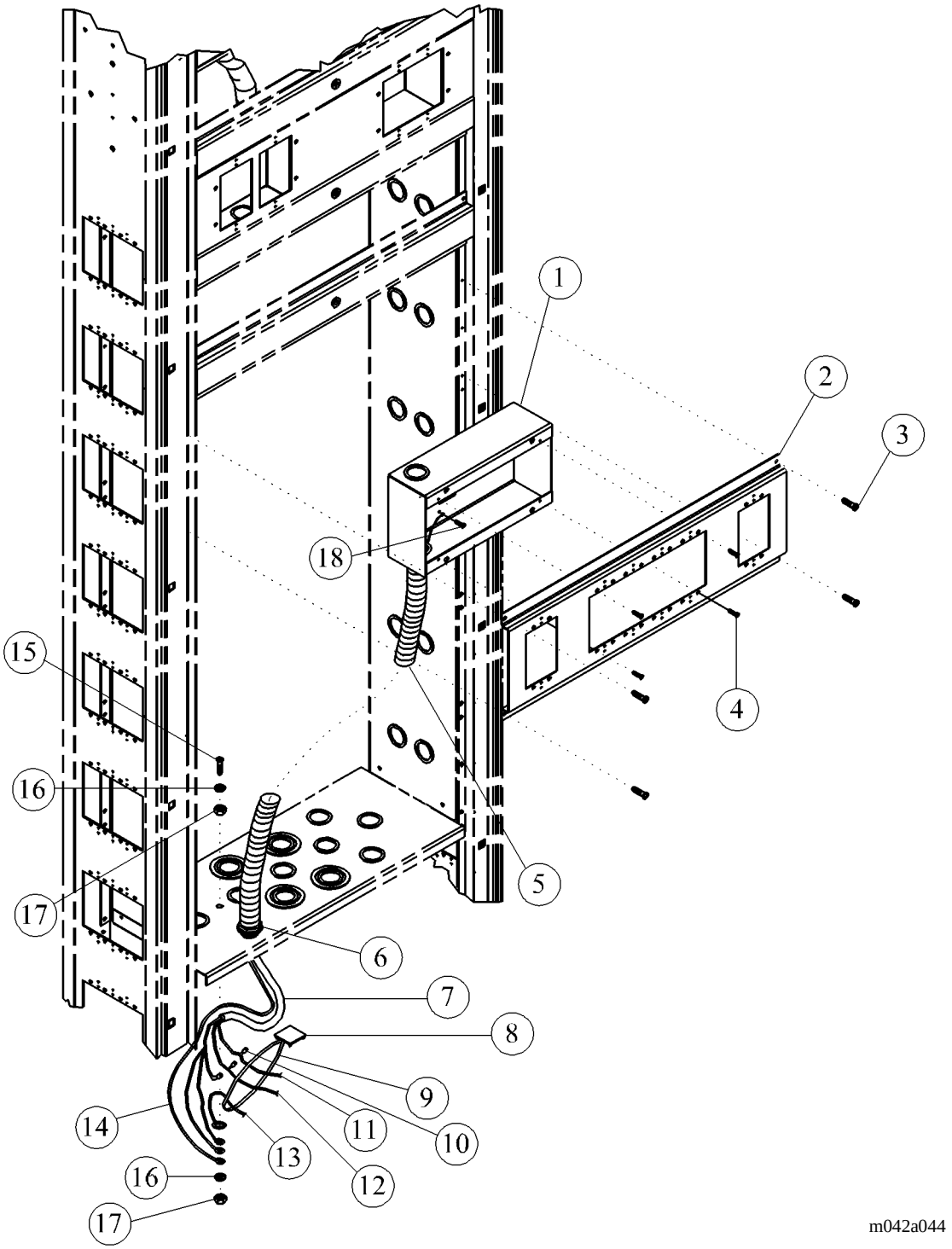

5

Table 5-14. Clock/Elapsed Timer Mount Provision

Item Number	Part Number	Quantity	Description
1	57250 (950E)	1	Backbox stat clock
2	50231 (950E)	1	Horizontal clock/timer
3	393 (950E)	4	Screw
4	16115 (950E)	4	Screw
5	17421 (950E)	2.5 lft	Conduit 1/2"
6	27545 (950E)	2	Connector
7	33728 (950E)	1	Timer cable assembly
8	50128 (950E)	1	Wire tie mount
9	52553 (950E)	1	Wire tie
10	32741 (950E)	3	Wire joint
11	51254-20 (950E)	1	Wire lead black
12	51255-02 (950E)	1	Wire lead white
13	51881-96 (950E)	1	Wire lead green
14	5188160 (950E)	1	Ground wire
15	9423 (950E)	1	Screw
16	34084 (950E)	2	Lockwasher—external tooth
17	309 (950E)	2	Nut
18	5556501 (950E)	1	Screw

Universal Gas Outlet Assembly

Figure 5-14. Universal Gas Outlet Assembly

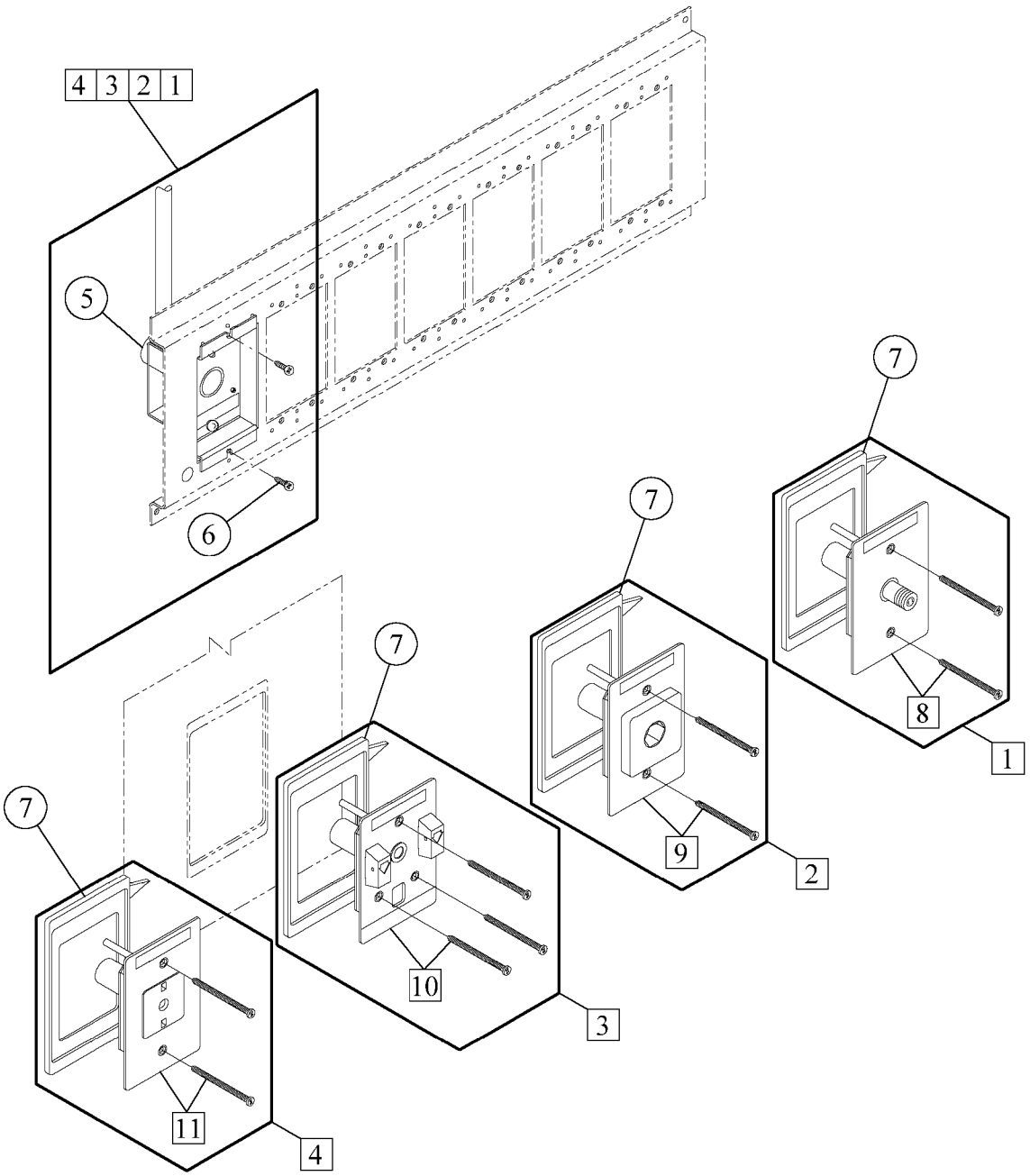

m042a045

Table 5-15. Universal Gas Outlet Assembly

Item Number	Part Number	Quantity	Description
1	950E0207 (950E) or 950E0208 (950E) or 950E0307 (950E) or 950E0308 (950E) or 950E0407 (950E) or 950E0408 (950E) or 950E1804 (950E)	1	Gas outlet domestic DISS oxygen Gas outlet international DISS oxygen Gas outlet domestic DISS vacuum Gas outlet international DISS vacuum Gas outlet domestic DISS air Gas outlet international DISS air Gas outlet DISS N_2O
2	950E0205 (950E) or 950E0206 (950E) or 950E0305 (950E) or 950E0306 (950E) or 950E0405 (950E) or 950E0406 (950E) or 950E1803 (950E)	1	Gas outlet domestic P-B oxygen Gas outlet international P-B oxygen Gas outlet domestic P-B vacuum Gas outlet international P-B vacuum Gas outlet domestic P-B air Gas outlet international P-B air Gas outlet P-B N_2O

5

Item Number	Part Number	Quantity	Description
3	950E0203 (950E) or 950E0204 (950E) or 950E0303 (950E) or 950E0304 (950E) or 950E0403 (950E) or 950E0404 (950E) or 950E1802 (950E)	1	Gas outlet—oxygen—Chemtron—domestic Gas outlet—oxygen—Chemtron—international Gas outlet—vacuum—Chemtron—domestic Gas outlet—vacuum—Chemtron—international Gas outlet—air—Chemtron—domestic Gas outlet—air—Chemtron—international Gas outlet—nitrous oxide—Chemtron
4	950E0201 (950E) or 950E0202 (950E) or 950E0301 (950E) or 950E0302 (950E) or 950E0401 (950E) or 950E0402 (950E) or 950E1801 (950E)	1	Gas outlet—oxygen—Ohio—domestic Gas outlet—oxygen—Ohio—international Gas outlet—vacuum—Ohio—domestic Gas outlet—vacuum—Ohio—international Gas outlet—air—Ohio—domestic Gas outlet—air—Ohio—international Gas outlet—nitous oxide—Ohio

Item Number	Part Number	Quantity	Description
5	5347401 (950E) or 5347402 (950E) or 5347403 (950E) or 5347404 (950E) or 5347405 (950E) or 5347406 (950E) or 53474-07 (950E)	1	Backbody, medical air Backbody, oxygen Backbody, vacuum Backbody, N_2O Backbody—console—air-international Backbody—console—oxygen—international Backbody—console—vacuum—international
6	16115 (950E)	2	Screw
7	53504 (950E)	1	Bezel—console gas
8	53505-01 (950E) or 53505-02 (950E) or 53505-03 (950E) or 5350504 (950E) or 5350505 (950E) or 5350506 (950E) or 5350507 (950E)	1	Air—domestic DISS valve assembly Oxygen—domestic DISS valve assembly Vacuum—domestic DISS valve assembly N_2O DISS valve assembly Air—international DISS valve assembly Oxygen—international DISS valve assembly Vacuum—international DISS valve assembly

5

Item Number	Part Number	Quantity	Description
9	53484-01 (950E) or 53484-02 (950E) or 53484-03 (950E) or 53484-04 (950E) or 5348405 (950E) or 5348406 (950E) or 53484-07 (950E)	1	Air—domestic P-B valve assembly Oxygen—domestic P-B valve assembly Vacuum—domestic P-B valve assembly N_2O P-B valve assembly Air—international P-B valve assembly Oxygen—international P-B valve assembly Vacuum—international P-B valve assembly
10	53483-01 (950E) or 53483-02 (950E) or 53483-03 (950E) or 53483-04 (950E) or 5348305 (950E) or 5348306 (950E) or 5348307 (950E)	1	Air—domestic NCG valve assembly Oxygen—domestic NCG valve assembly Vacuum—domestic NCG valve assembly N_2O NCG valve assembly Air—international NCG valve assembly Oxygen—international NCG valve assembly Vacuum—international NCG valve assembly

5

Item Number	Part Number	Quantity	Description
11	53482-01 (950E) or 53482-02 (950E) or 53482-03 (950E) or 5348204 (950E) or 53482-05 (950E) or 53482-06 (950E) or 53482-07 (950E)	1	Valve assembly, air—domestic Ohio Valve assembly, oxygen—domestic Ohio Valve assembly, vacuum—domestic Ohio Valve assembly, N_2O Ohio Valve assembly, air—international Ohio Valve assembly, oxygen—international Ohio Valve assembly, vacuum—international Ohio

5

Ohio Gas Outlet

Figure 5-15. Ohio Gas Outlet

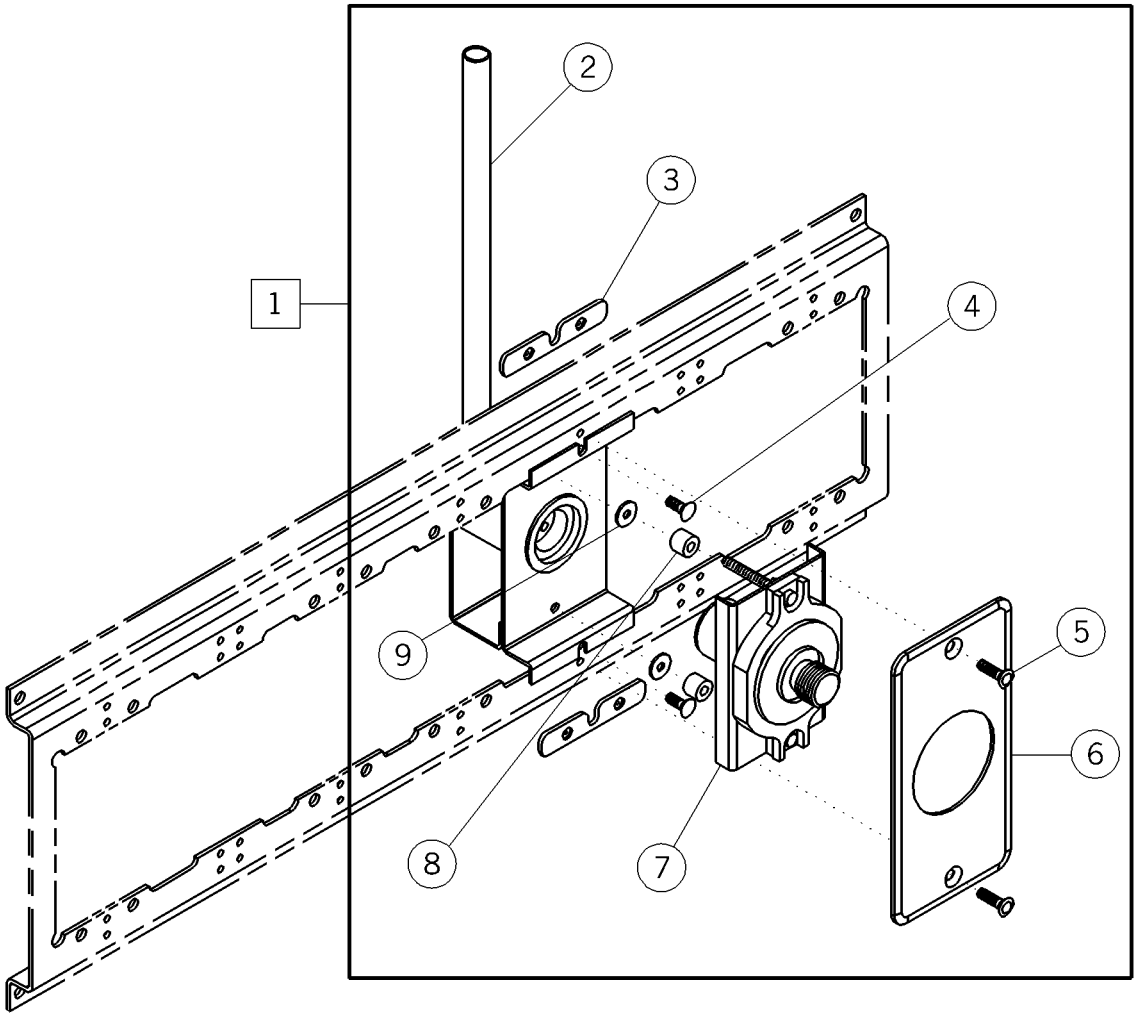

m042a046

Table 5-16. Ohio Gas Outlet

Item Number	Part Number	Quantity	Description
1	670E0401 or 670E0402 or 670E0201 or 670E0202 or 670E0301 or 670E0302	1	Air outlet Ohio—DISS Air outlet Ohio—quick Oxygen outlet Ohio—DISS Oxygen outlet Ohio—quick Vacuum outlet Ohio—DISS Vacuum outlet Ohio—quick
2	29577 (950E) or 29578 (950E) or 29579 (950E)	1	Gas back body air Gas back body oxygen Gas back body vacuum
3	50341 (950E)	As required	Gas spacer
4	16115 (950E)	2	Screw
5	50590 (950E)	2	Screw
6	50673 (950E)	1	Faceplate gas —Ohio
7	29531 (950E) or 29532 (950E) or 29533 (950E) or 29534 (950E) or 29535 (950E) or 29536 (950E)	1	Valve DISS air Valve DISS oxygen Valve DISS vacuum Valve quick air Valve quick oxygen Valve quick vacuum
8	59366 (950E)	As required	Spacer
9	59367 (950E)	As required	Fiber washer

5

Allied Gas Outlet

Figure 5-16. Allied Gas Outlet

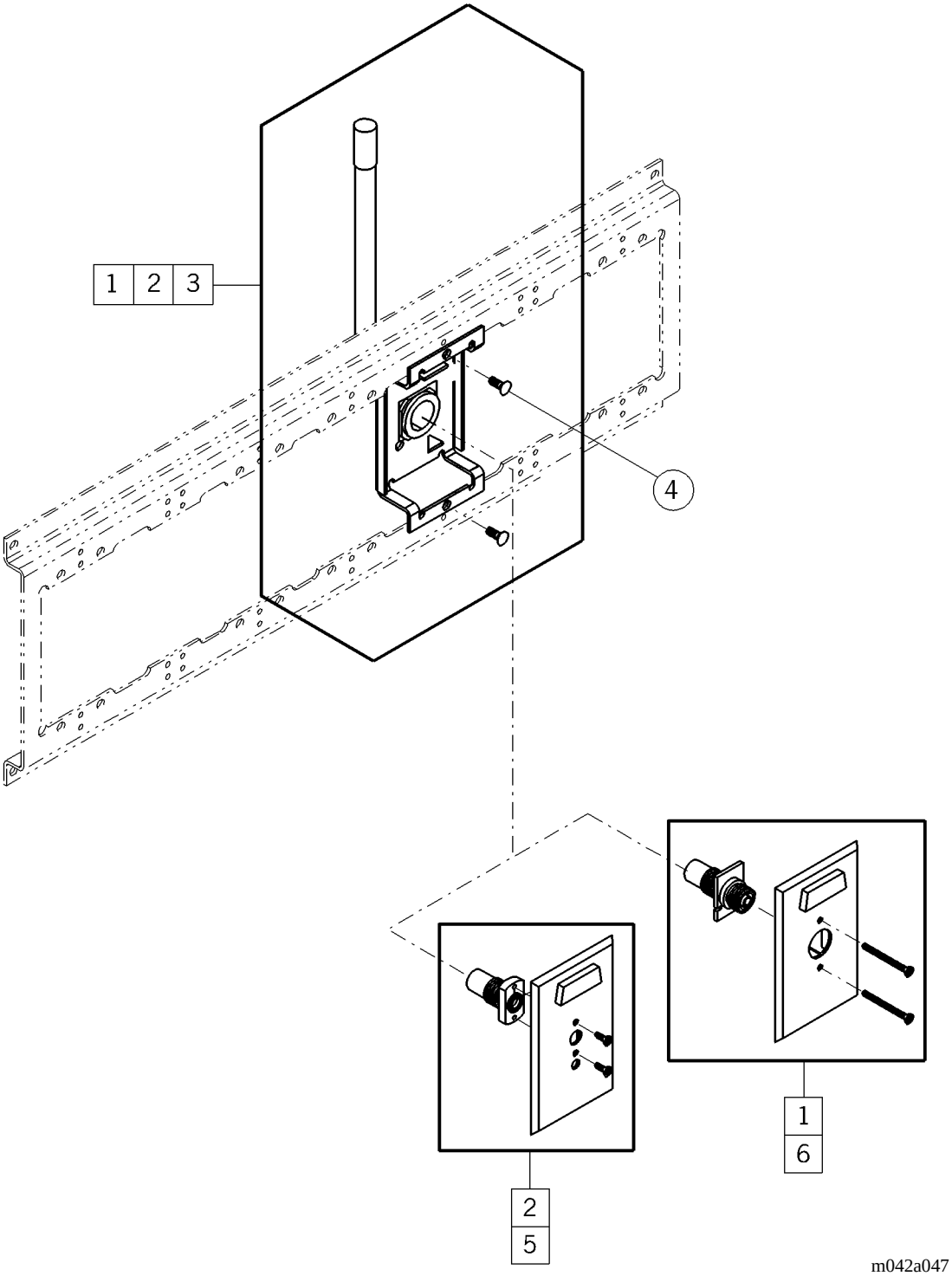

5

Table 5-17. Allied Gas Outlet

Item Number	Part Number	Quantity	Description
1	M670E02-11 or M670E03-11 or M670E04-11 or M670E18-11	1	Oxygen outlet, Allied, DISS Vacuum outlet, Allied, DISS Air outlet, Allied, DISS N2O outlet, Allied, DISS
2	M670E02-12 or M670E03-12 or M670E04-12 or M670E18-12	1	Oxygen outlet, Allied, quick Vacuum outlet, Allied, quick Air outlet, Allied, quick N2O outlet, Allied, quick
3	57915 (950E) or 57917 (950E) or 57919 (950E) or 57921 (950E)	1	Backbody assembly oxygen, Allied Backbody assembly vacuum Allied Backbody assembly air Allied Backbody assembly N_2O, Allied
4	16115 (950E)	2	Screw
5	57914 (950E) or 57916 (950E) or 57918 (950E) or 57920 (950E)	1	Quick valve and faceplate assembly oxygen Quick valve and faceplate assembly vacuum Quick valve and faceplate assembly air Quick valve and faceplate assembly N_2O
6	57922 (950E) or 57923 (950E) or 57924 (950E) or 57925 (950E)	1	DISS valve and faceplate assembly oxygen DISS valve and faceplate assembly vacuum DISS valve and faceplate assembly air DISS valve and faceplate assembly N_2O

5

Oxequip Gas Outlet

Figure 5-17. Oxequip Gas Outlet

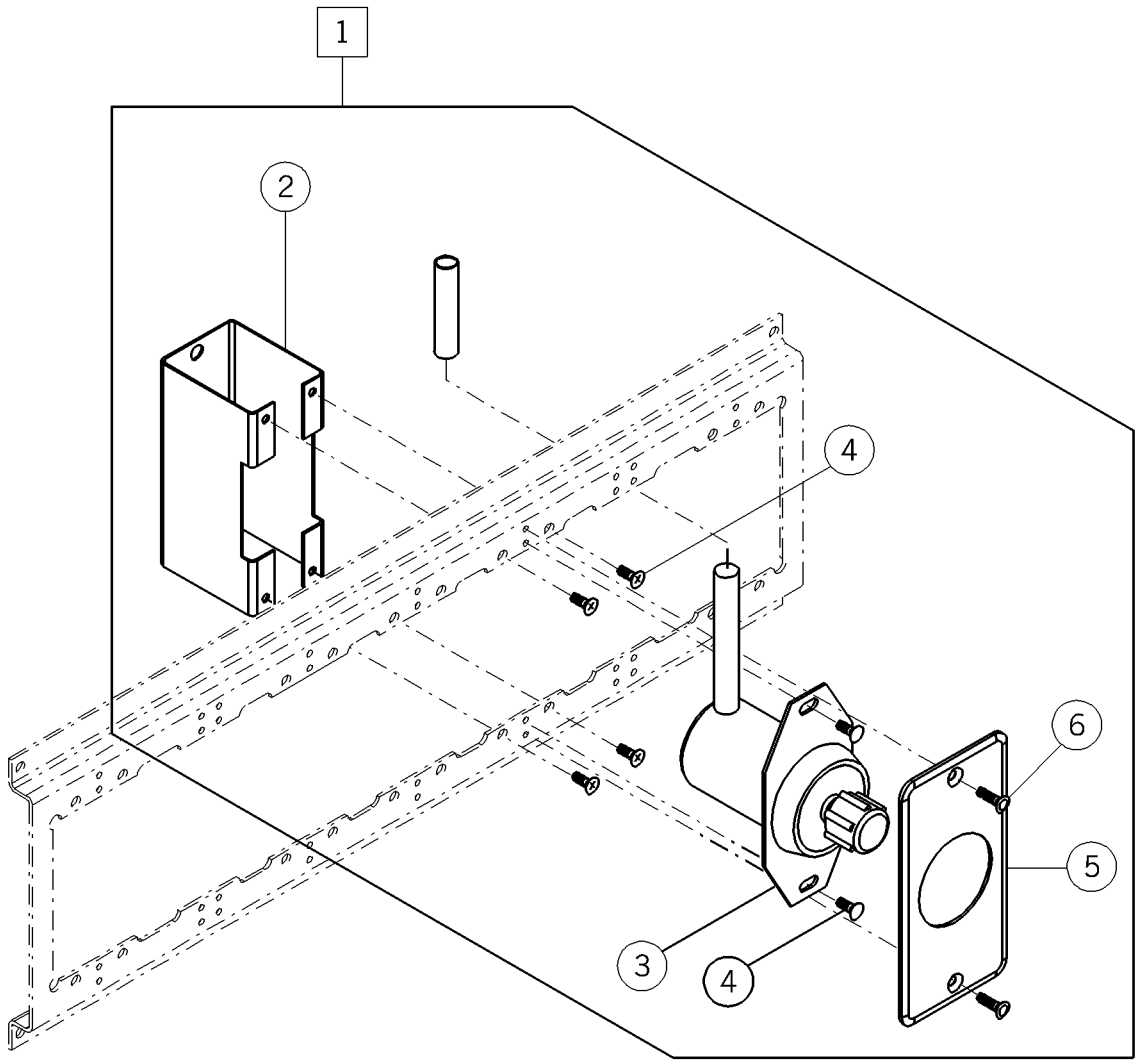

m042a048

Table 5-18. Oxequip Gas Outlet

Item Number	Part Number	Quantity	Description
1	M670E0306 or M670E0406 or M670E0206 or M670E0305 or M670E0405 or M670E0205	1	Vacuum Oxyequip—quick outlet Air Oxyequip—quick outlet Oxygen Oxyequip—quick outlet Vacuum Oxyequip—DISS outlet Air Oxyequip—DISS outlet Oxygen Oxyequip—DISS outlet
2	52362 (950E)	1	Stabilizer
3	31517 (950E) or 31518 (950E) or 31519 (950E) or 31520 (950E) or 31521 (950E) or 31522 (950E)	1	Oxequip quick vacuum outlet Oxequip quick air outlet Oxequip quick oxygen outlet Vacuum outlet DISS Air outlet DISS Oxygen outlet DISS
4	16115 (950E)	6	Screw
5	50673 (950E)	1	Faceplate—gas—Ohio
6	50590 (950E)	2	Screw

Nurse Call Provision

Figure 5-18. Nurse Call Provision

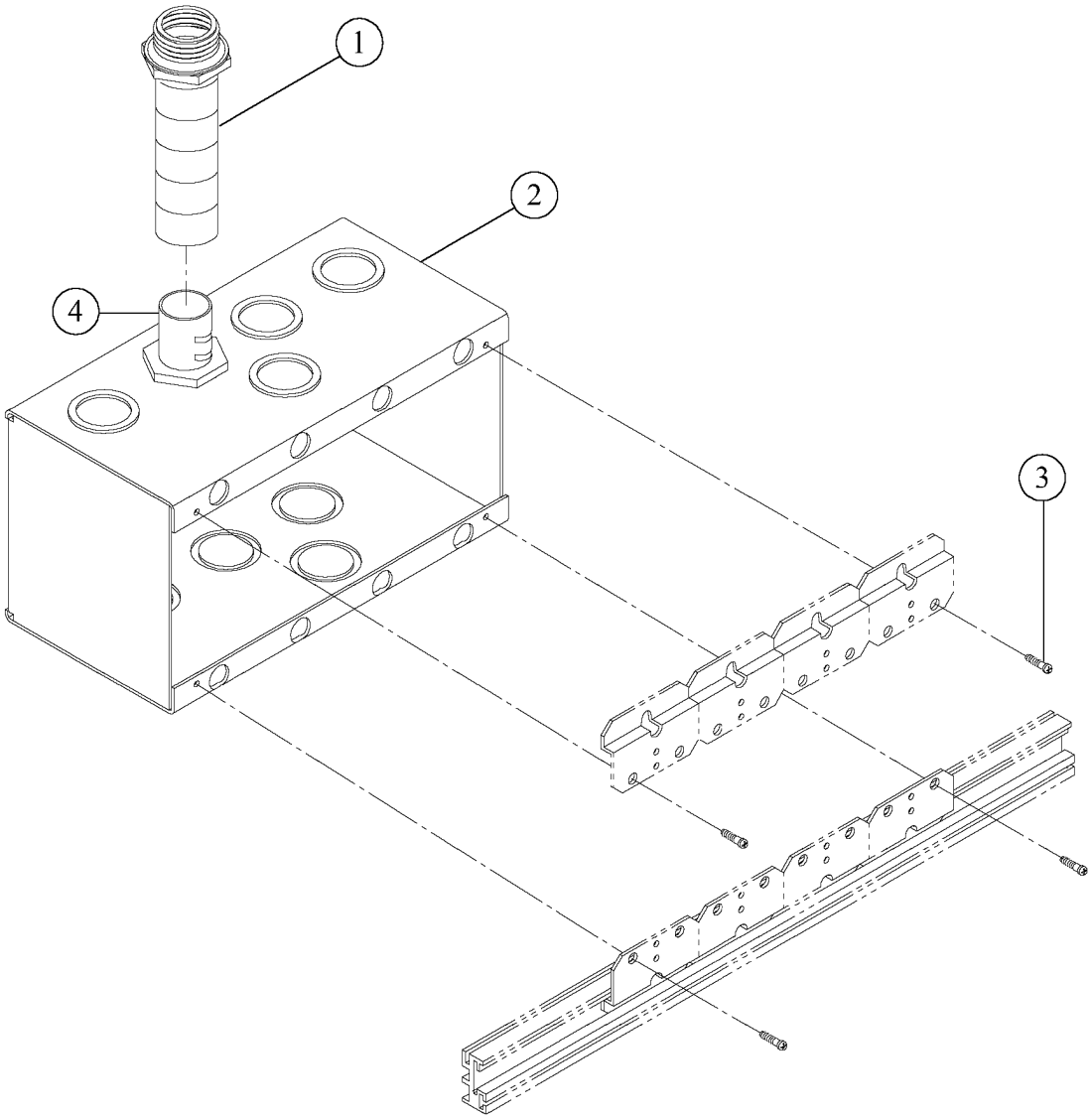

m042a049

Table 5-19. Nurse Call Provision

Item Number	Part Number	Quantity	Description
1	SP31232 (950E)	1	Conduit
2	56735 (950E) or 56736-39 (950E) or 56737-39 (950E) or 56738 (950E) or 56799-39 (950E)	1	Backbox, monitor 8 gang Backbox, monitor 4 gang Backbox, monitor 5 gang Backbox, monitor 6 gang Backbox, monitor 2 gang
3	16115 (950E)	4	Screw
4	15365 (950E)	2	Insulated connector

5

Phone Provision

Figure 5-19. Phone Provision

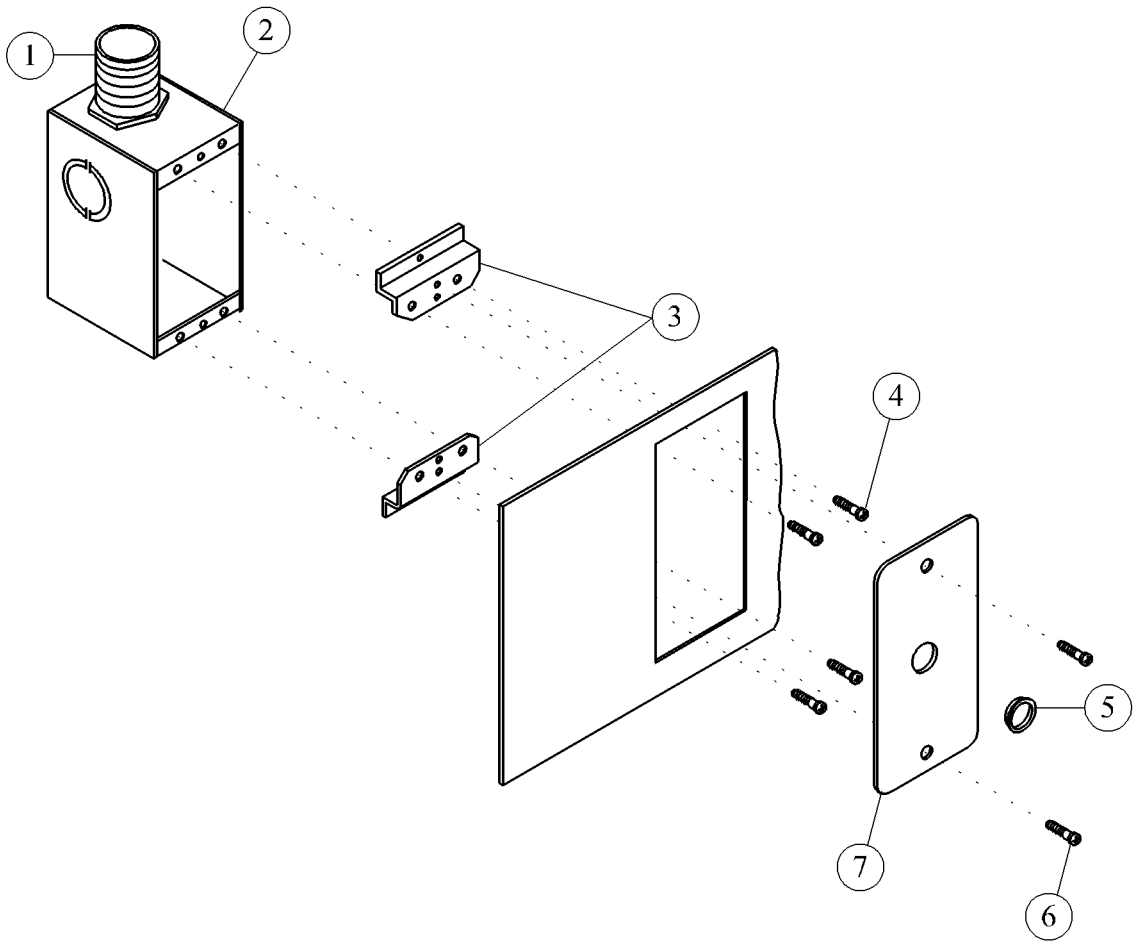

m042a050

Table 5-20. Phone Provision

Item Number	Part Number	Quantity	Description
1	15363 (950E)	As required	Flexible conduit
2	33154 (950E)	1	Device box
3	670E0111 (950E)	2	Device mounting/1 gang (optional)
4	16115 (950E)	4	Screw
5	24925 (950E)	1	Bushing
6	50590 (950E)	2	Screw
7	50688 (950E)	1	Faceplate

Additional Ground Tie Point

Figure 5-20. Additional Ground Tie Point

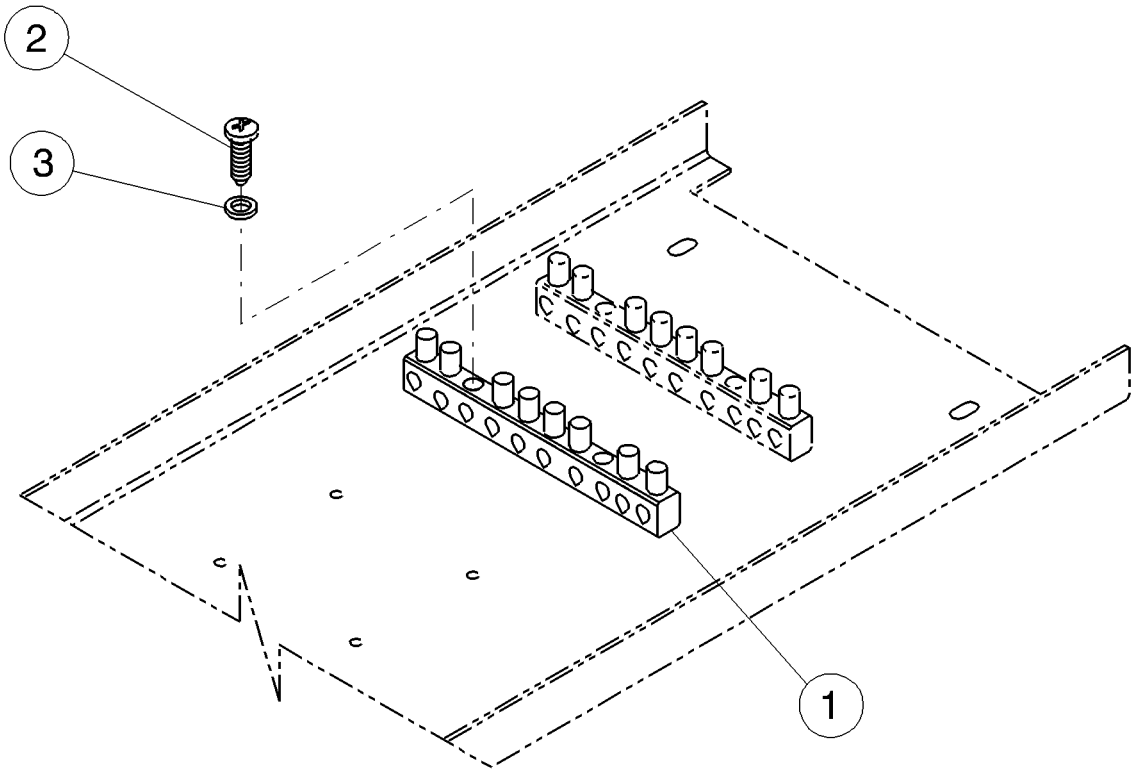

m042a051

Table 5-21. Additional Ground Tie Point

Item Number	Part Number	Quantity	Description
1	56551 (950E)	1	Ground bar
2	52243-07 (950E)	2	Screw
3	15250 (950E)	4	Locknut washer base

Fixed Bottle Slide

Figure 5-21. Fixed Bottle Slide

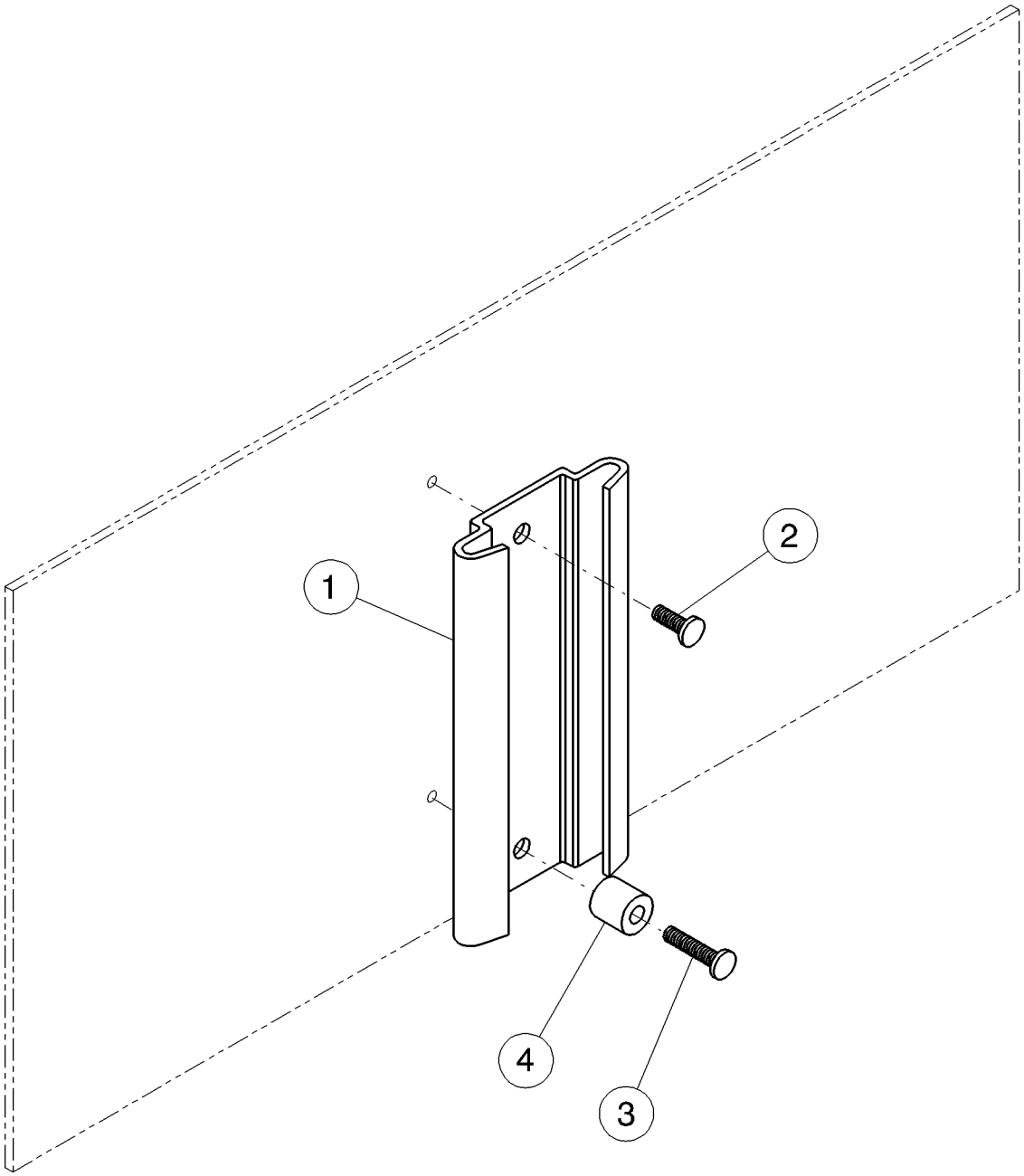

m042a052

Table 5-22. Fixed Bottle Slide

Item Number	Part Number	Quantity	Description
1	50561 (950E)	1	Bracket
2	50891-04 (950E)	1	Screw
3	50891-07 (950E)	1	Screw
4	50560 (950E)	1	Spacer—nylon

SideCom Communication System Receptacle (37 Pin)

Figure 5-22. SideCom Communication System Receptacle (37 Pin)

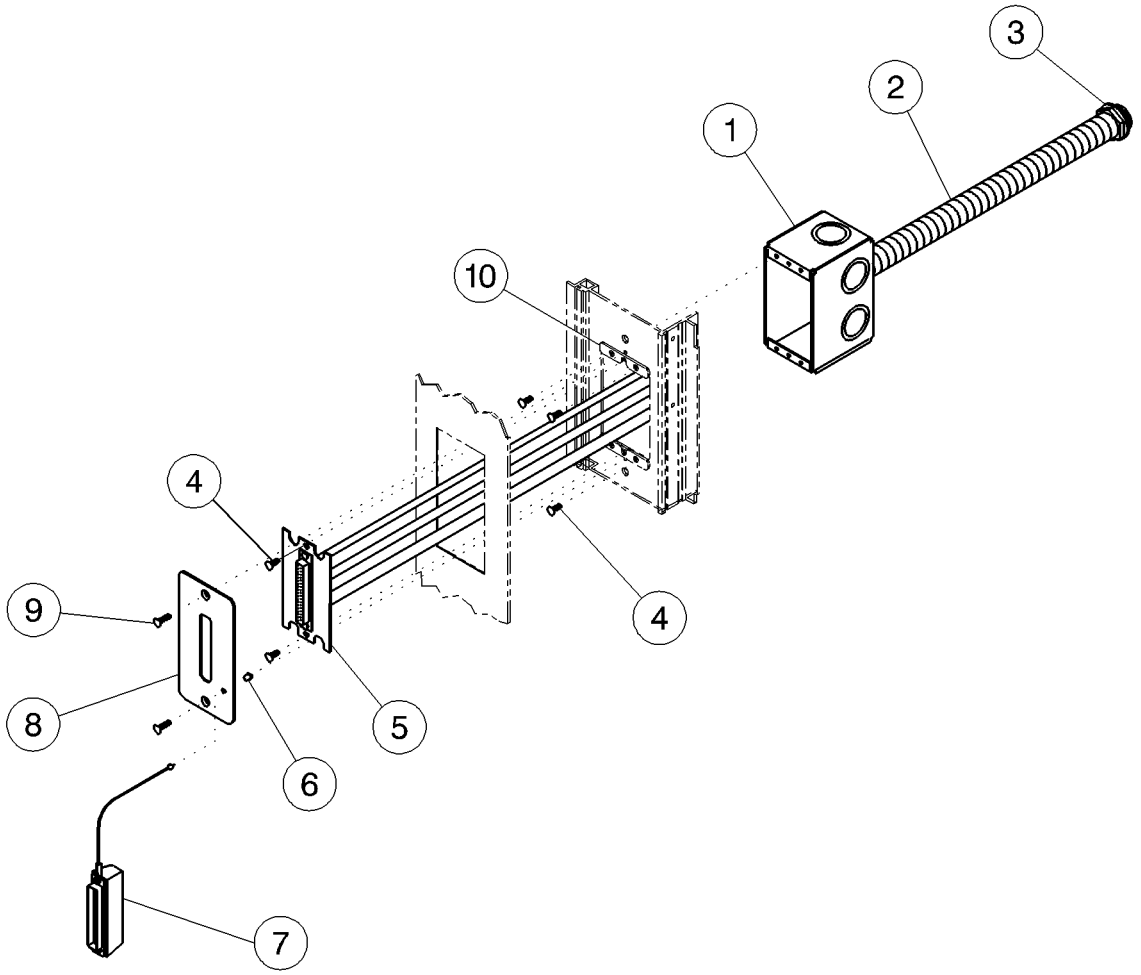

m042a053

Table 5-23. SideCom Communication System Receptacle (37 Pin)

Item Number	Part Number	Quantity	Description
1	33154 (950E)	1	Device box
2	SP312 (950E)	1	Conduit—3/4"
3	15365 (950E)	2	Insulated connector
4	16115 (950E)	6	Screw
5	SP394 (950E)	1	Cable/connector assembly
6	29246 (950E)	1	Sleeve
7	SA1238 (950E)	1	Dummy plug assembly
8	50684 (950E)	1	Sidecom receptacle faceplate
9	50590 (950E)	2	Screw
10	50341 (950E)	As required	Gas spacer

SideCom Communication System Receptacle

Figure 5-23. SideCom Communication System Receptacle

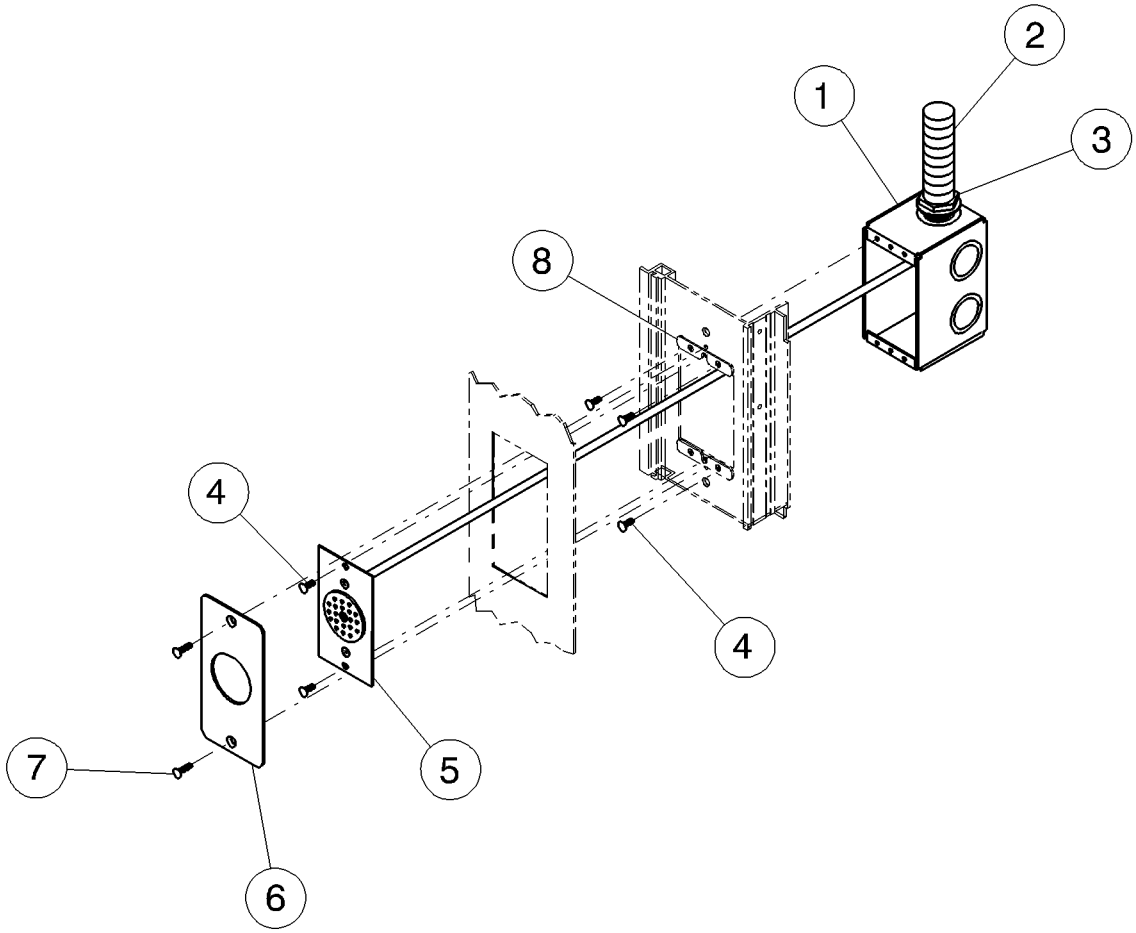

m042a054

Table 5-24. SideCom Communication System Receptacle

Item Number	Part Number	Quantity	Description
1	33154 (950E)	1	Device box
2	SP312 (950E)	1	Conduit
3	15365 (950E)	2	Insulated connector
4	16115 (950E)	6	Screw
5	50251 (950E)	1	Cable/connector assembly
6	50678 (950E)	1	Faceplate, single receptacle
7	50590 (950E)	2	Screw
8	50341 (950E)	As required	Gas spacer

COMposer Communication System Bed Interface Unit

Figure 5-24. COMposer Communication System Bed Interface Unit

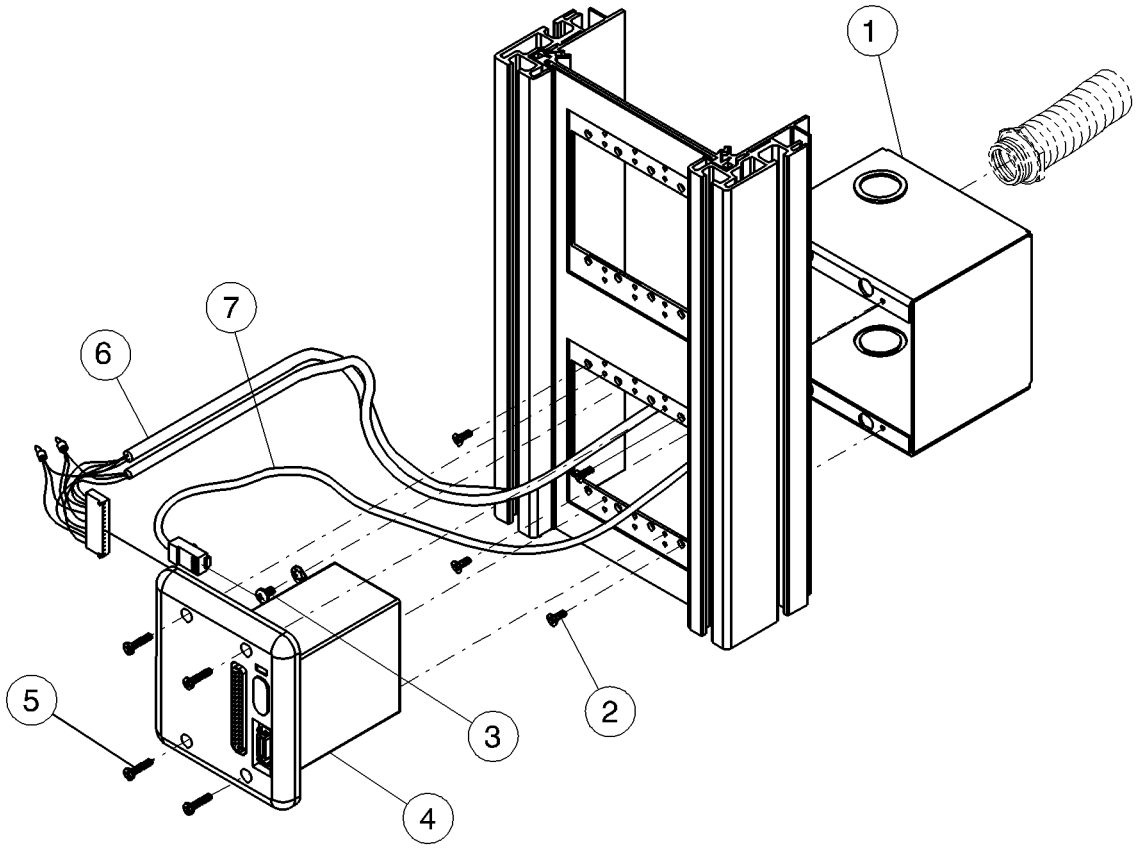

m042a055

Table 5-25. COMposer Communication System Bed Interface Unit

Item Number	Part Number	Quantity	Description
1	57677 (950E)	1	Backbox, bed interface unit (BIU)
2	16115 (950E)	4	Screw
3	393 (950E)	1	Screw
4	57595 (950E)	1	BIU 2 gang w/ring terminal
5	50891-07 (950E)	4	Screw
6	SP377 (950E)	1	Cable assembly, light/TV controls
7	SP427 (950E)	1	Cable assembly, modular plug

One Gang Bed Interface Unit

Figure 5-25. One Gang Bed Interface Unit

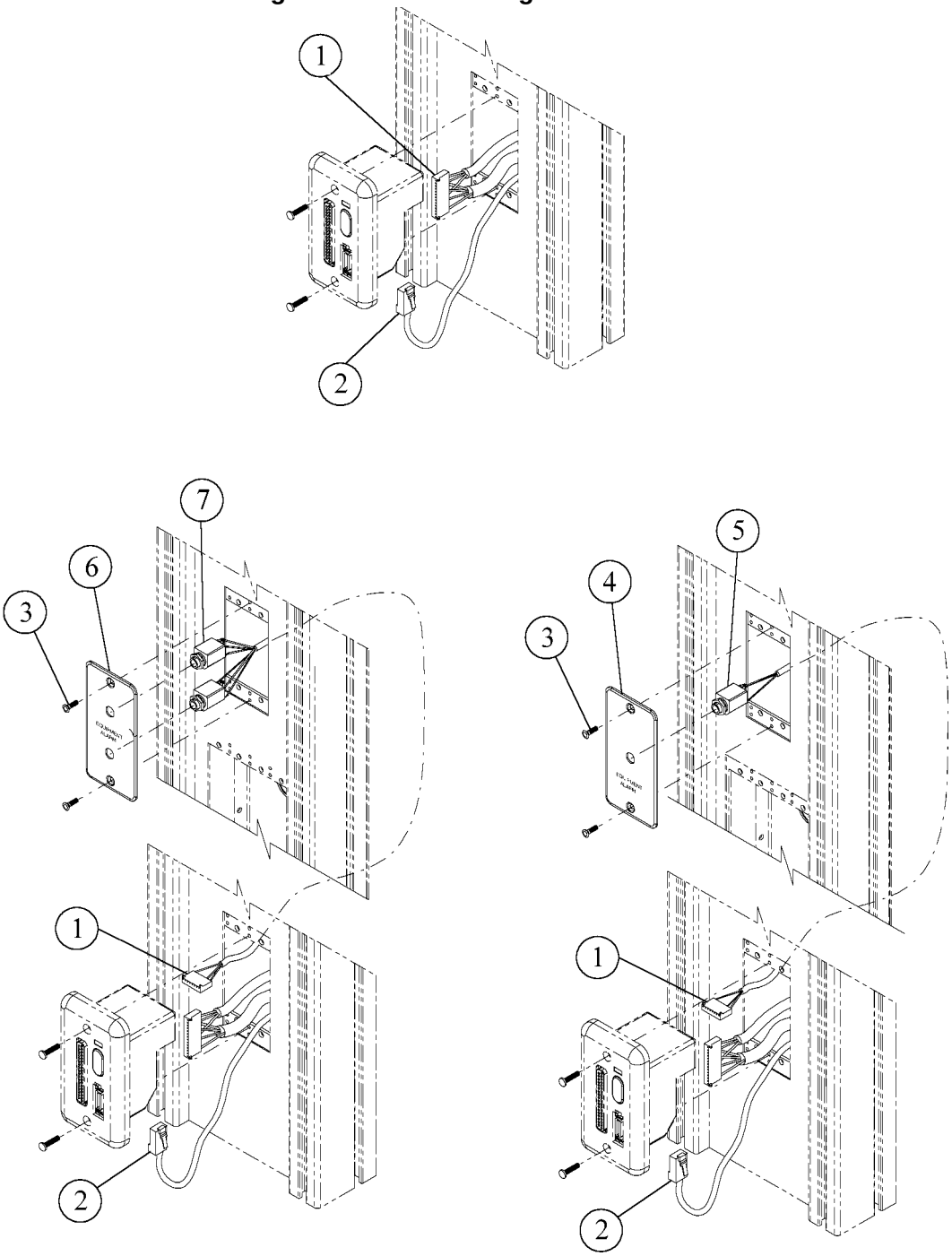

m042a056

Table 5-26. One Gang Bed Interface Unit

Item Number	Part Number	Quantity	Description
1	SP377 (950E)	1	Cable assembly, light/TV controls
2	SP427 (950E)	1	Cable assembly, modular plug
3	50590 (950E)	2	Screw
4	58105 (950E)	1	Faceplate, single alarm
5	58107 (950E)	1	Cable assembly, single alarm
6	58106 (950E)	1	Faceplate, double alarm
7	58108 (950E)	1	Cable assembly, double alarm jack

Timed Light Switch

Figure 5-26. Timed Light Switch

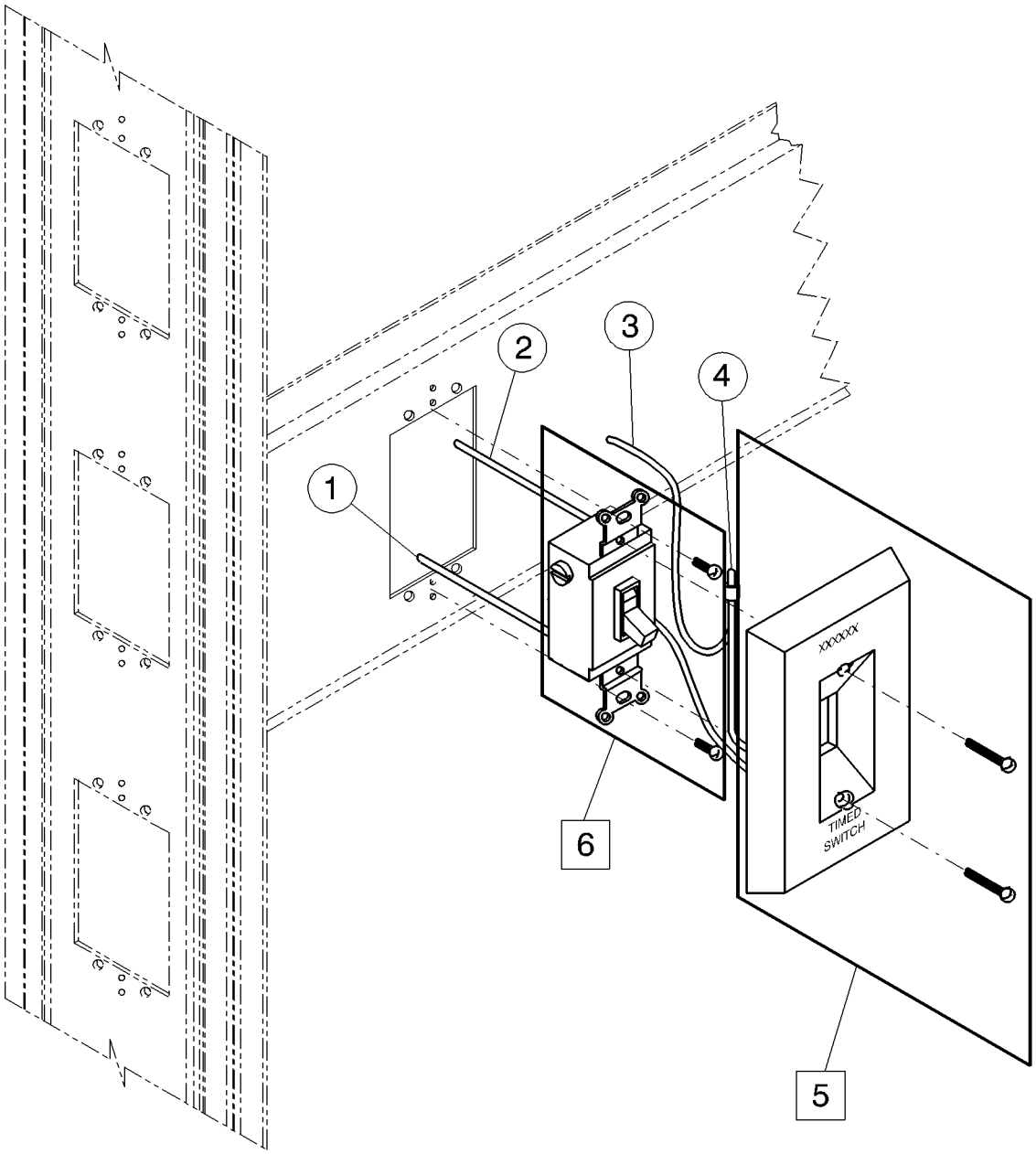

m042a057

Table 5-27. Timed Light Switch

Item Number	Part Number	Quantity	Description
1	5167200 (950E)	1	Wire lead, green
2	5160200 (950E)	1	Wire lead, red
3	5125400 (950E)	1	Wire lead, black
4	14465 (950E)	3	Wire nut
5	0011510 (950E) or 0011631 (950E)	1	Timer assembly, engraved vertical Engraved faceplate/toggle/vertical/clear
6	001-0303 (950E) or 001-0305 (950E)	1	3—way toggle switch 3—way toggle switch

Telemate Receptacle

Figure 5-27. Telemate Receptacle

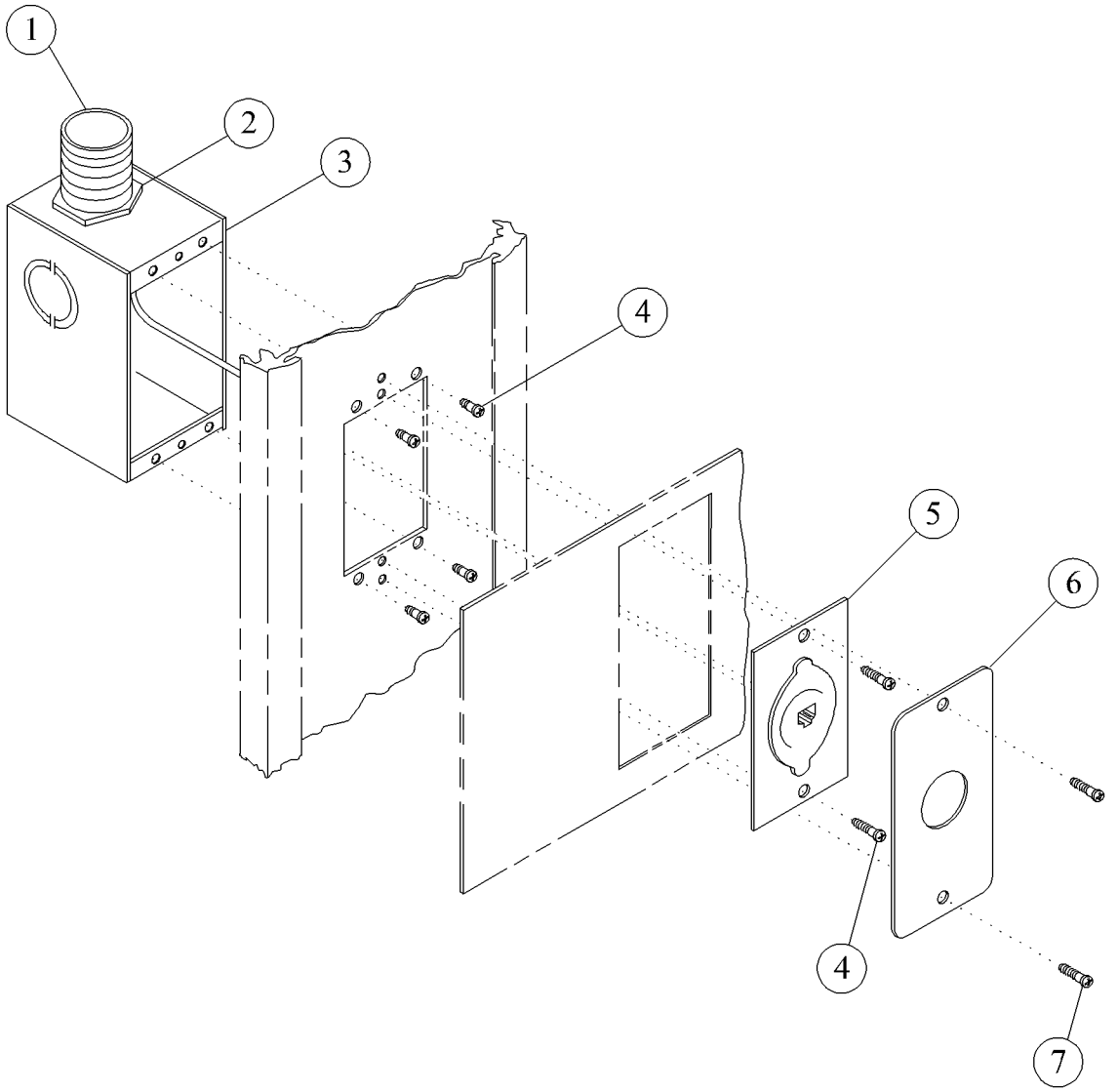

m042a058

Table 5-28. Telemate Receptacle

Item Number	Part Number	Quantity	Description
1	SP31262 (950E)	1	Conduit
2	15365 (950E)	2	Insulated connector
3	33154 (950E)	1	Device box
4	16115 (950E)	6	Screw
5	34129 (950E)	1	Phone receptacle assembly
6	50690 (950E)	1	Faceplate—telemate
7	50590 (950E)	2	Screw

Isolation Transformer

Figure 5-28. Isolation Transformer

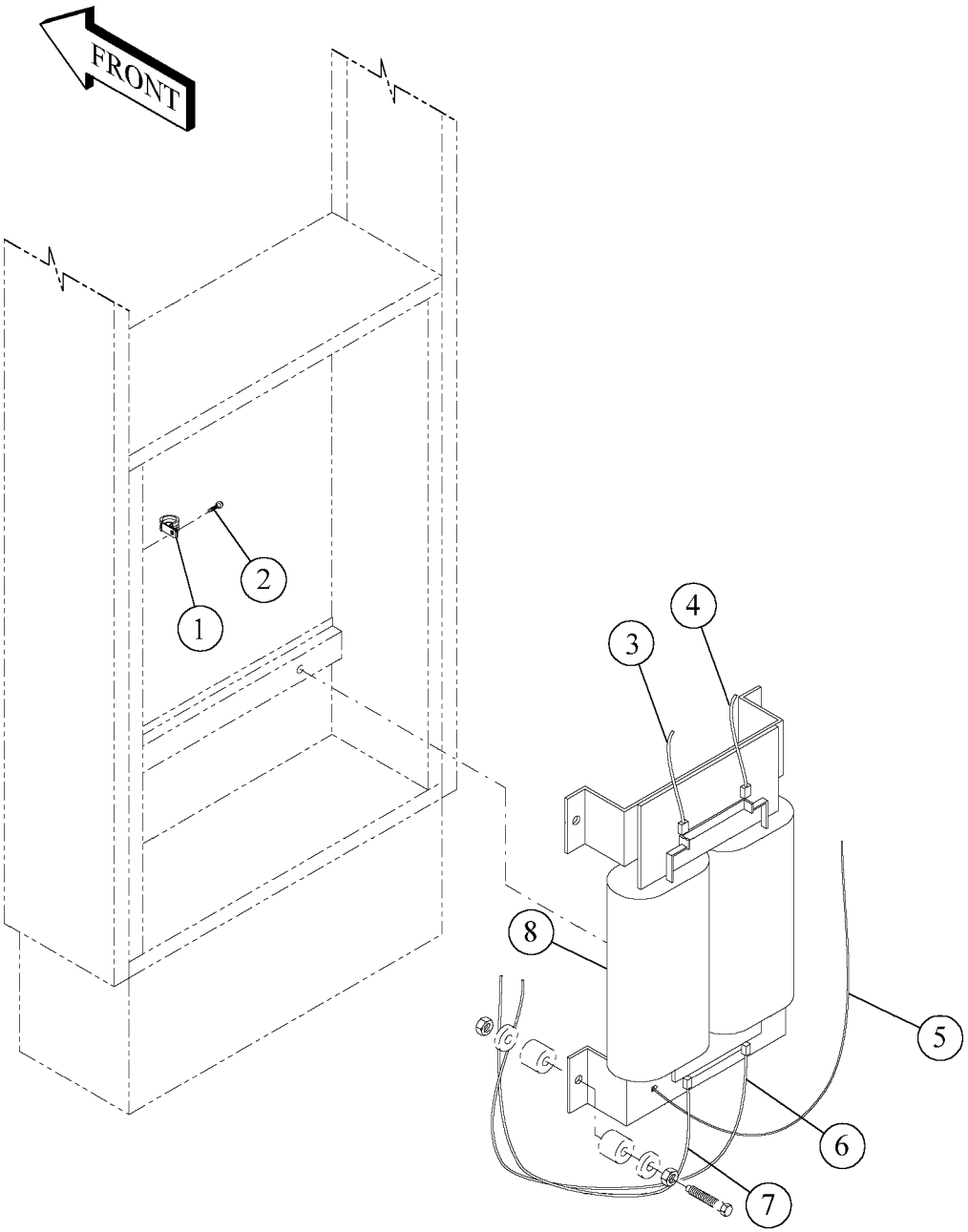

m042a059

Table 5-29. Isolation Transformer

Item Number	Part Number	Quantity	Description
1	26797 (950E)	1	Cable clamp
2	52555-03 (950E)	1	Screw
3	50748 (950E)	1	Wire lead—white
4	50746 (950E) or 50747 (950E)	1	Wire lead—white Wire lead—red
5	5250008 (950E)	1	Wire lead—green
6	50750 (950E)	1	Wire lead—white
7	50749 (950E)	1	Wire lead—white
8	M950E3401 (950E) or M950E3402 (950E) or M950E3403 (950E) or M950E3404 (950E) or M950E3405 (950E) or M950E3406 (950E) or M950E3407 (950E) or M950E3408 (950E)	1	Transformer 3KVA 120/120V Transformer 3KVA 208/120V Transformer 3KVA 240/120V Transformer 3KVA 277/120V Transformer 5KVA 120/120V Transformer 5KVA 208/120V Transformer 5KVA 240/120V Transformer 5KVA 277/120V

5

Low Voltage Controller

Figure 5-29. Low Voltage Controller

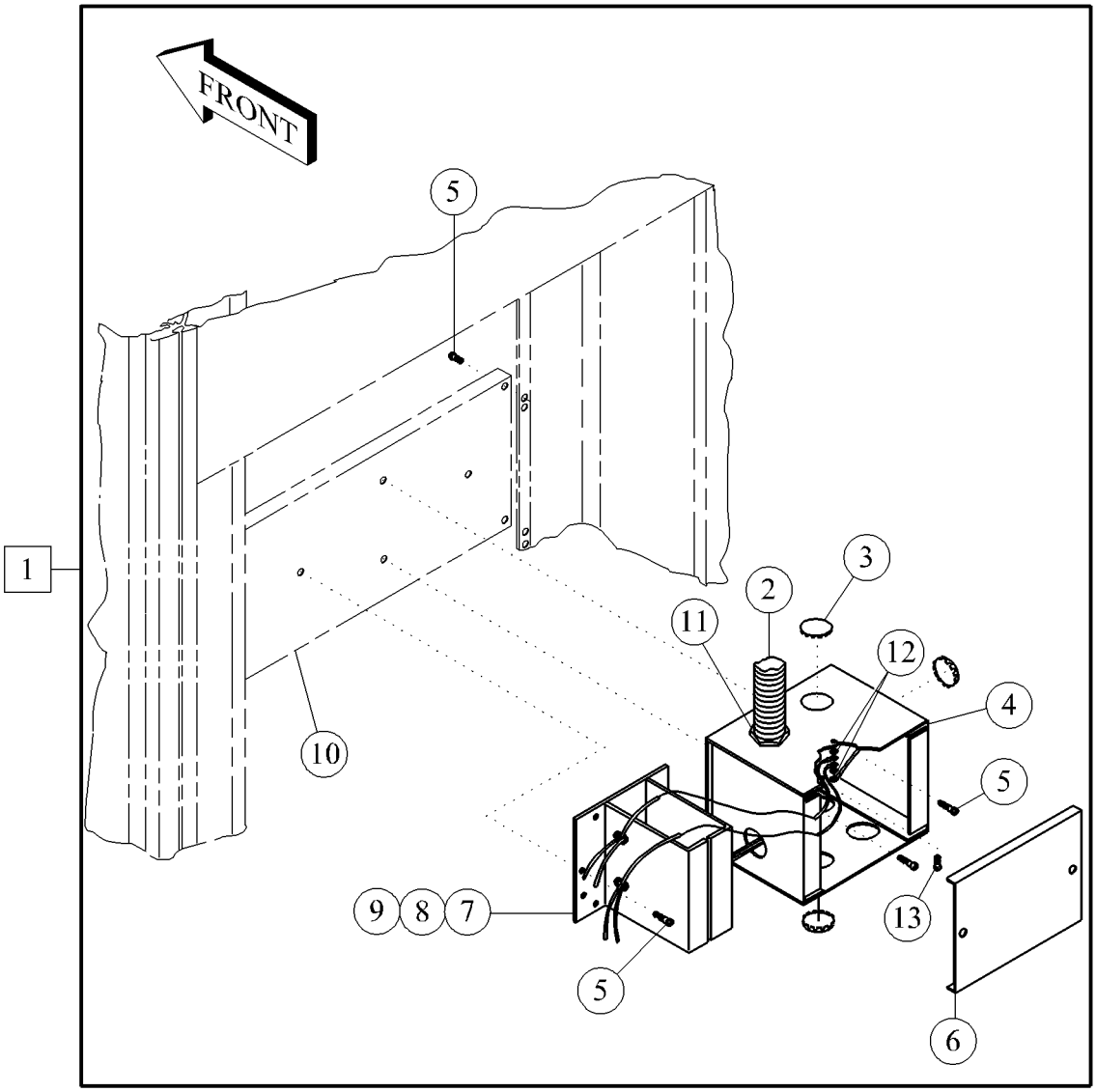

m042a060

Table 5-30. Low Voltage Controller

Item Number	Part Number	Quantity	Description
1	950E4011 (950E) or 950E4012 (950E) or 950E4013 (950E)	1	Low voltage controller 120V Low voltage controller 240V Low voltage controller 277V
2	SP312-20 (950E)	1	Conduit
3	14720 (950E)	3	Plug button
4	56106 (950E)	1	LVC box assembly
5	393 (950E)	9	Screw
6	56105 (950E)	1	Cover, LVC box
7	54632-01 (950E)	1	Controller complete—120V
8	5463202 (950E)	1	Controller complete—240V
9	54632-03 (950E)	1	Controller complete—277V
10	50226 (950E)	1	Mounting plate
11	15365 (950E)	2	Insulated connector
12	15250 (950E)	2	Locknut washer base
13	52243-07 (950E)	1	Screw

Low Voltage Switch

Figure 5-30. Low Voltage Switch

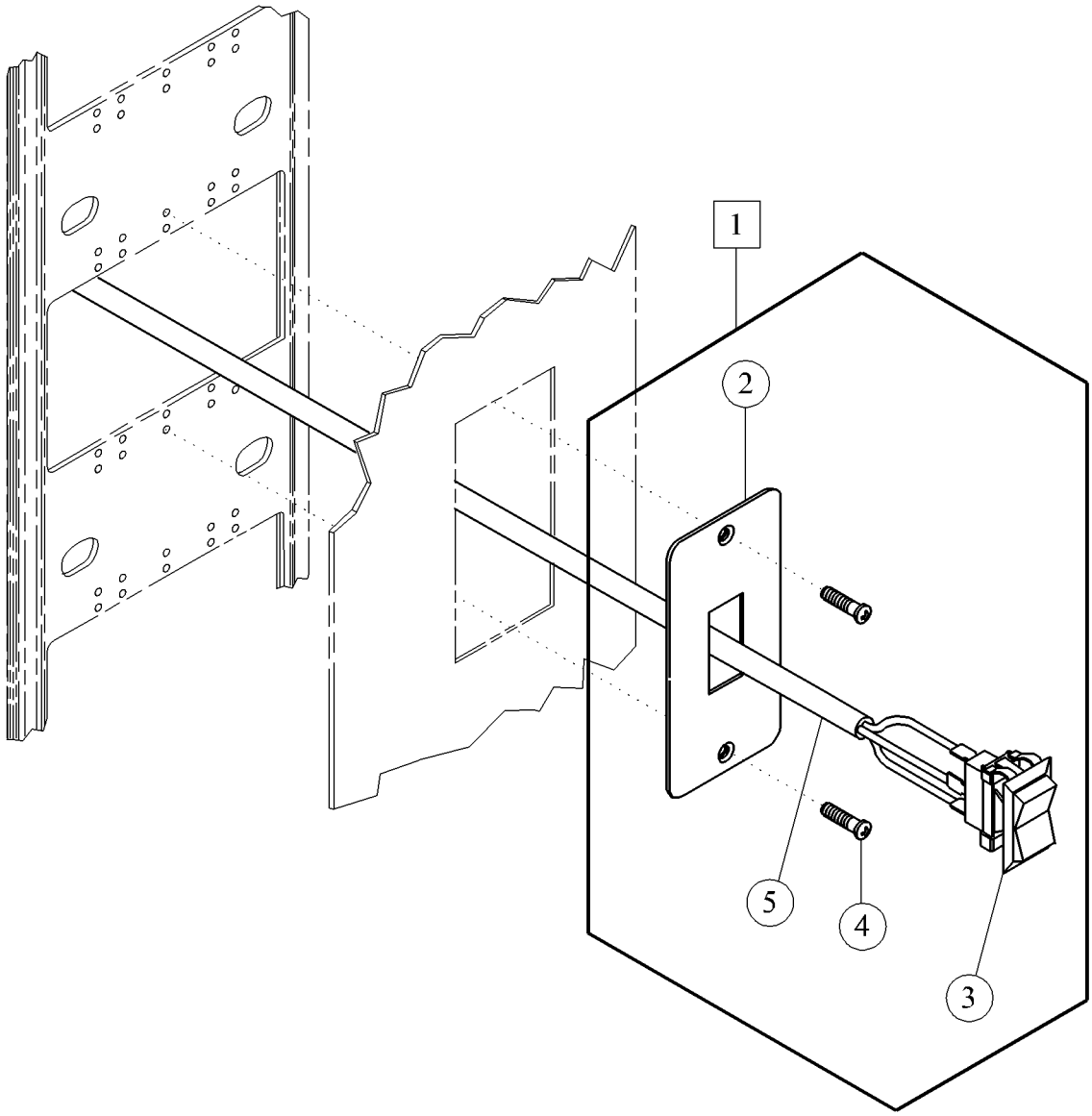

m042a061

Table 5-31. Low Voltage Switch

Item Number	Part Number	Quantity	Description
1	990-4201 (950E) or 990-4202 (950E) or 990-4203 (950E)	1	Low voltage switch, read and indirect Low voltage switch, read Low voltage switch, indirect
2	50958 (950E) or 50957 (950E) or 50959 (950E)	1	Faceplate, read Faceplate, read/indirect Faceplate, indirect
3	23125 (950E)	1	Momentary center off switch
4	50590 (950E)	2	Screw
5	SP262-B (950E)	1	Low voltage switch cable

5

Line Isolation Monitor

Figure 5-31. Line Isolation Monitor

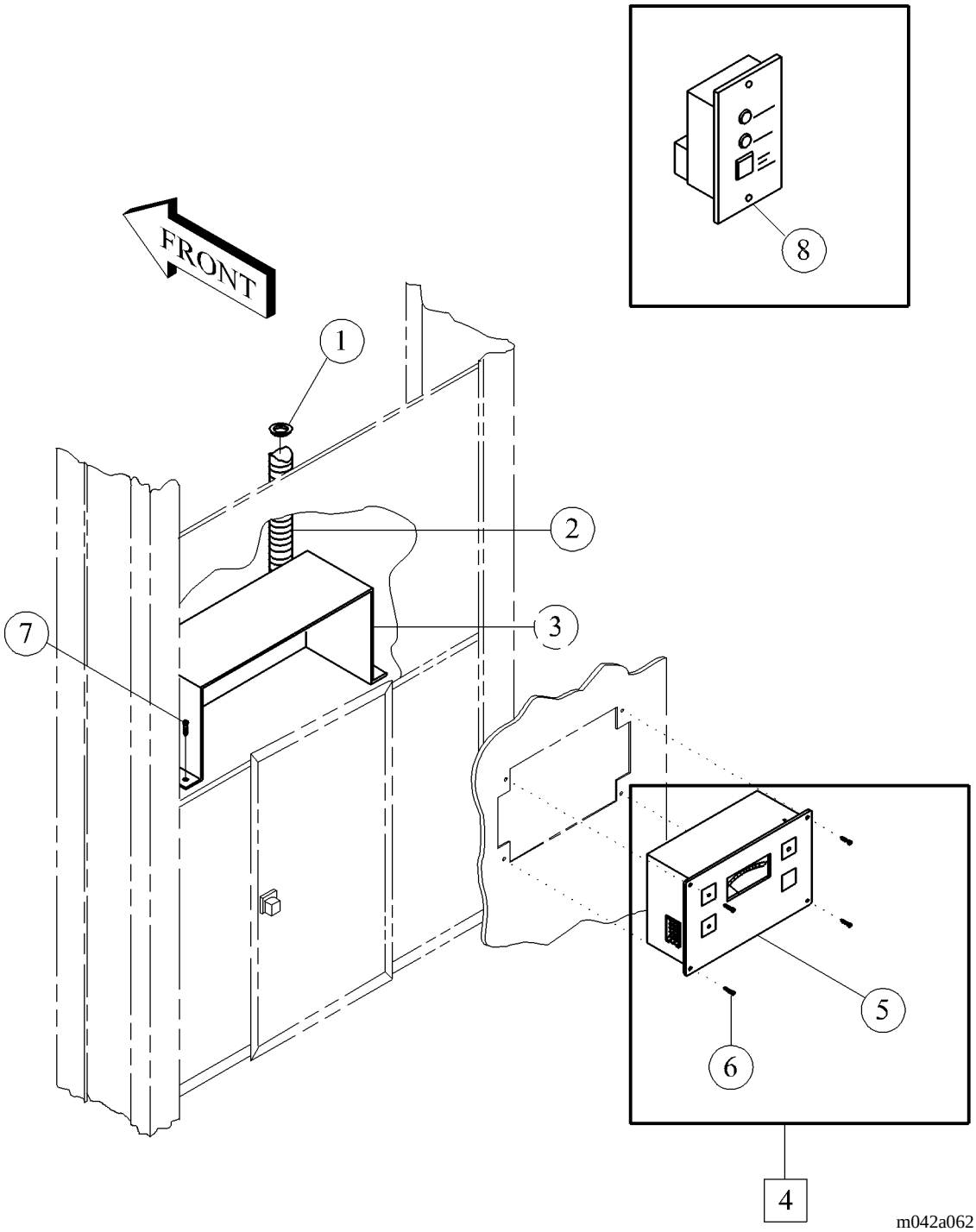

5

Table 5-32. Line Isolation Monitor

Item Number	Part Number	Quantity	Description
1	27545 (950E)	2	Connector
2	17421 (950E)	1	Conduit 1/2"
3	57248 (950E)	1	Backbox
4	001-0901 (950E) or 001-0902 (950E)	1	Line isolation monitor, domestic (2MA or 5MA) Line isolation monitor,Canadian (2MA only)
5	56617 (950E) or 5661701 (950E)	1	Line isolation monitor Line isolation monitor, 2MA
6	33663 (950E)	4	Screw
7	55565-01 (950E)	4	Screw, SEMS
8	50368-01 (950E)	1	Remote indicator—1 gang

5

Simplex and Hubbellock Outlet Receptacle

Figure 5-32. Simplex and Hubbellock Outlet Receptacle

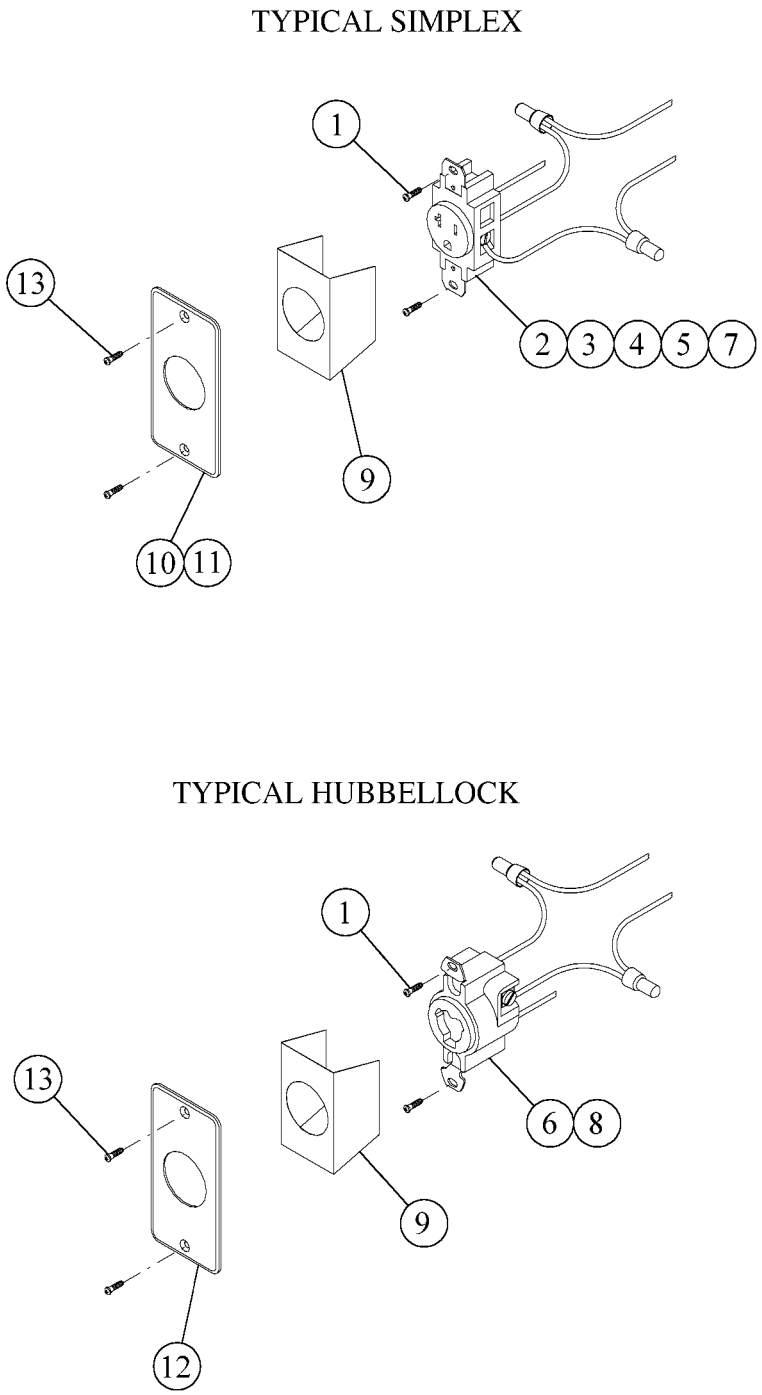

Table 5-33. Simplex and Hubbellock Outlet Receptacle

Item Number	Part Number	Quantity	Description
1	16115 (950E)	2	Screw
2	28438 (950E)	1	Outlet (ivory) single 20A
3	18061 (950E)	1	Outlet (ivory) single 15A
4	28437 (950E)	1	Outlet (red) single 20A
5	51042 (950E)	1	Outlet (red) single 15A
6	18062 (950E)	1	Outlet (Twistlock) 20A
7	51024 (950E)	1	Outlet (orange) single15A
8	200985 (950E)	1	Twistlock receptacle laser
9	56599 (950E)	1	Insulator simplex (required for isolated power only)
10	50678 (950E)	1	Faceplate, (plain) single receptacle
11	54811 (950E) or 54813 (950E) or 54815 (950E)	1	Faceplate simplex (general engraved vertical, clear) Faceplate simplex (general engraved horizontal, almond) Faceplate simplex (general engraved vertical, almond)
12	50679 (950E)	1	Faceplate (plain)—twistlock
13	50590 (950E)	2	Screw

Duplex Outlet Receptacle

Figure 5-33. Duplex Outlet Receptacle

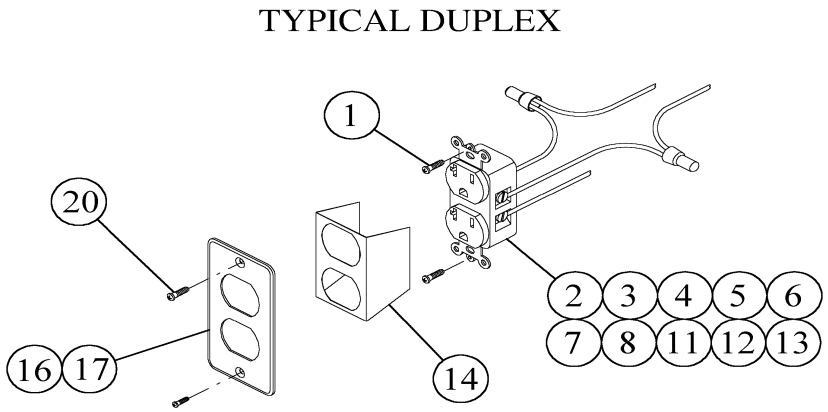

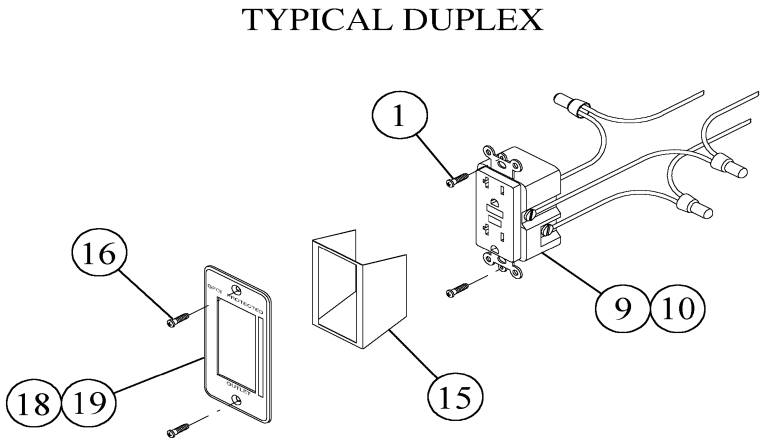

m042a064

5

Table 5-34. Duplex Outlet Receptacle

Item Number	Part Number	Quantity	Description
1	16115 (950E)	2	Screw
2	28439 (950E)	1	Outlet (ivory), duplex 20A
3	51129 (950E)	1	Outlet (ivory), duplex 15A
4	28436 (950E)	1	Outlet (red), duplex 20A
5	51130 (950E)	1	Outlet (red), duplex 15A
6	33798 (950E)	1	Outlet (ivory)—pediatric 15A
7	33799 (950E)	1	Outlet (red)—pediatric 15A
8	52412 (950E)	1	Outlet (orange)—duplex 15A—ISO PWR
9	51036 (950E)	1	Outlet (ivory)—GFR 20A
10	54743 (950E)	1	Outlet (red), duplex GFCI 20A
11	56989 (950E)	1	Outlet (neutral) duplex 20A
12	52414 (950E)	1	Outlet, (ivory) duplex 20A lighted
13	52413 (950E)	1	Outlet (ivory), duplex 15A lighted
14	56598 (950E)	1	Insulator, duplex (required for isolated power only)
15	56878 (950E)	1	Insulator, decorative style
16	50677 (950E)	1	Faceplace, (plain) duplex, 1-gang
17	54812 (950E) or 54817 (950E)	1	Faceplate, duplex (general engraved vertical, clear) Faceplate, duplex (general engraved vertical, almond)
18	57188 (950E) or 57189 (950E)	1	Faceplate, GFCI (general engraved vertical, clear) Faceplate, GFCI (general engraved vertical, almond)
19	55166 (950E) or 55167 (950E)	1	Faceplate, GFCI (specific purpose engraved vertical, clear) Faceplate, GFCI (specific purpose engraved vertical, almond)
20	50590 (950E)	2	Screw

Double Simplex Outlet Receptacle

Figure 5-34. Double Simplex Outlet Receptacle

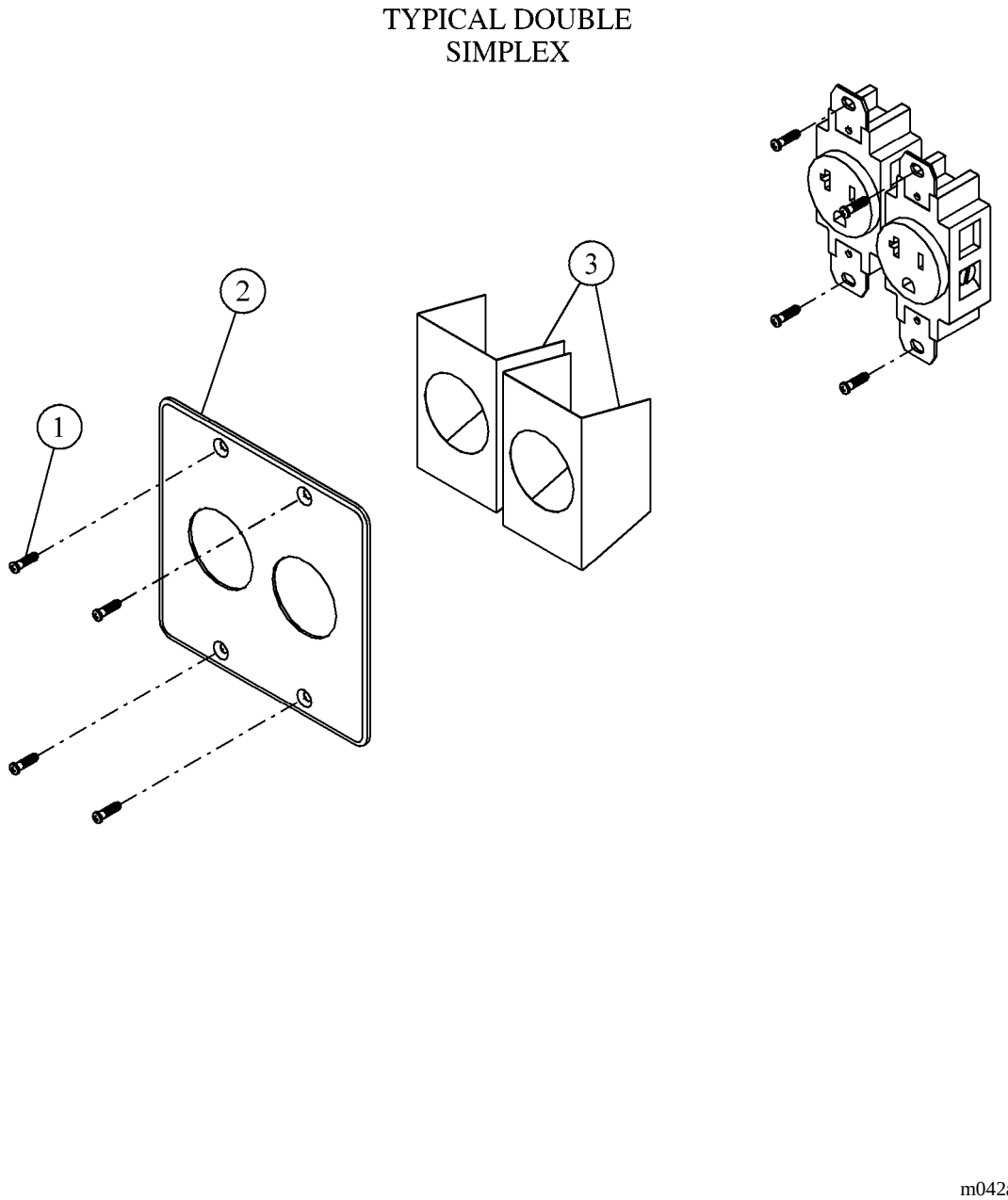

5

Table 5-35. Double Simplex Outlet Receptacle

Item Number	Part Number	Quantity	Description
1	50590 (950E)	4	Screw
2	50694 (950E)	1	Faceplate, (clear) dual simplex
3	56599 (950E)	2	Insulator, simplex (required for isolated power only)
4	16115 (950E)	4	Screw
5	28438 (950E)	2	Outlet (ivory) single 20A
6	18061 (950E)	2	Outlet (ivory) single 15A
7	28437 (950E)	2	Outlet (red) single 20A
8	51042 (950E)	2	Outlet (red) single 15A
9	51024 (950E)	2	Outlet (orange) single 15A

Double Duplex Outlet Receptacle

Figure 5-35. Double Duplex Outlet Receptacle

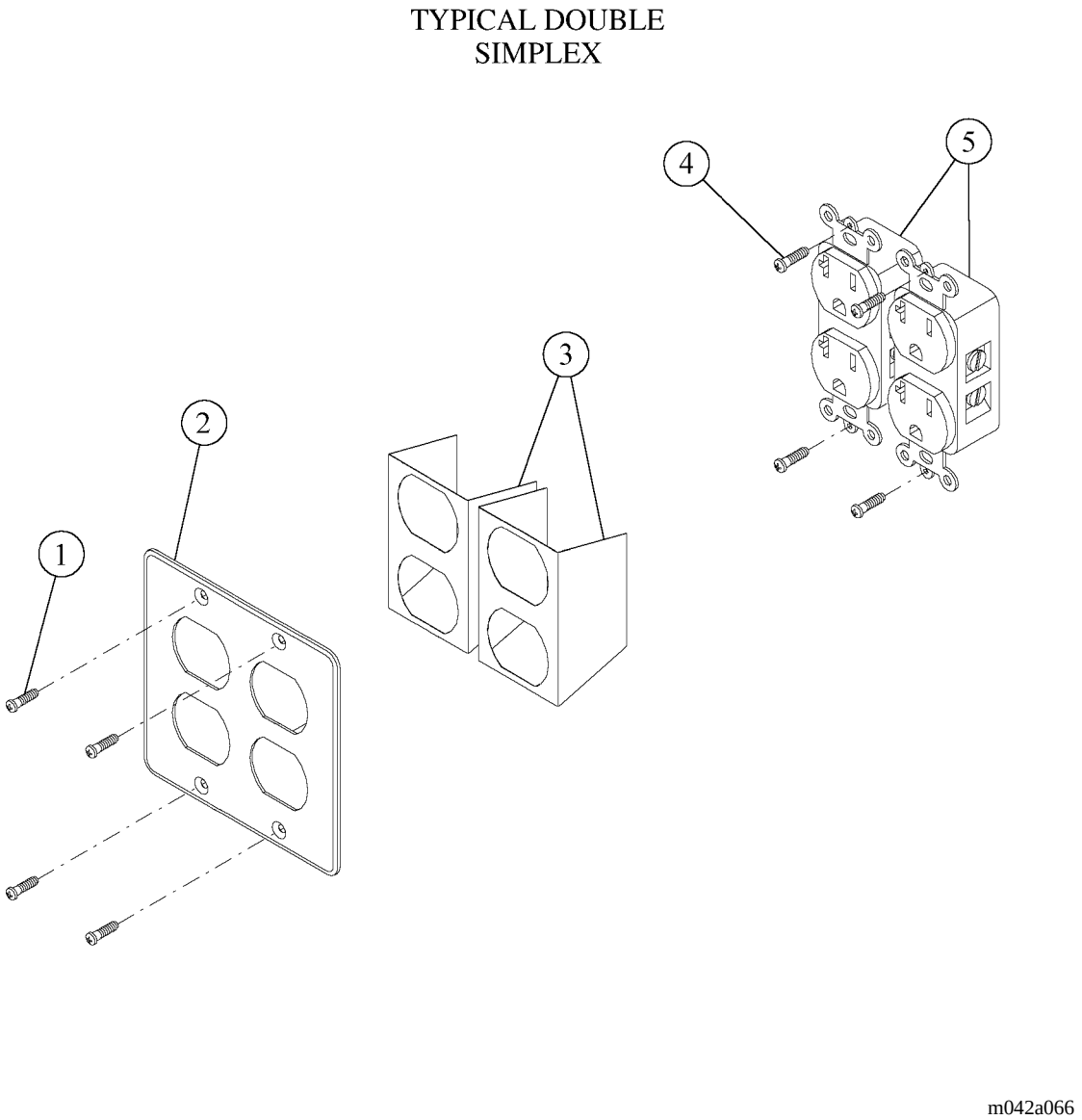

5

Table 5-36. Double Duplex Outlet Receptacle

Item Number	Part Number	Quantity	Description
1	50590 (950E)	4	Screw
2	50694 (950E)	1	Faceplate (clear), dual simplex
3	56598 (950E)	2	Insulator, duplex (required for isolated power only)
4	16115 (950E)	4	Screw
5	28439 (950E)	1	Outlet, (ivory) duplex 20A
6	51129 (950E)	1	Outlet, (ivory) duplex 15A
7	28436 (950E)	1	Outlet, (red) duplex 20A
8	51130 (950E)	1	Outlet, (red) duplex 15A
9	33798 (950E)	1	Outlet, (ivory) duplex 15A
10	33799 (950E)	1	Outlet, (red) duplex 15A
11	52412 (950E)	1	Outlet, (orange) duplex 15A
12	56989 (950E)	1	Outlet, (neutral) duplex 20A
13	52414 (950E)	1	Outlet, (ivory) duplex 20A
14	52413 (950E)	1	Outlet, (ivory) duplex 15A
15	56598 (950E)	1	Insulator, duplex
16	56878 (950E)	1	Insulator, decorative style
17	50677 (950E)	1	Faceplate, (plain) duplex 1-gang
18	54812 (950E) or 54816 (950E) or 54817 (950E)	1	Faceplate, duplex (general engraved vertical, clear) Faceplate, duplex (general engraved horizontal, almond) Faceplate, duplex (general engraved vertical, almond)
19	57188 (950E) or 57189 (950E) or 57190 (950E)	1	Faceplate, GFCI (general engraved vertical, clear) Faceplate, GFCI (general engraved vertical, almond) Faceplate, GFCI (general engraved horizontal, almond)

5

Item Number	Part Number	Quantity	Description
20	55166 (950E) or 55167 (950E) or 55168 (950E)	1	Faceplate, GFCI (specific purpose engraved vertical, clear) Faceplate, GFCI (specific purpose engraved vertical, almond) Faceplate, GFCI (specific purpose engraved horizontal, almond)
21	50590 (950E)	2	Screw

NOTES:

Ground Receptacle

Figure 5-36. Ground Receptacle

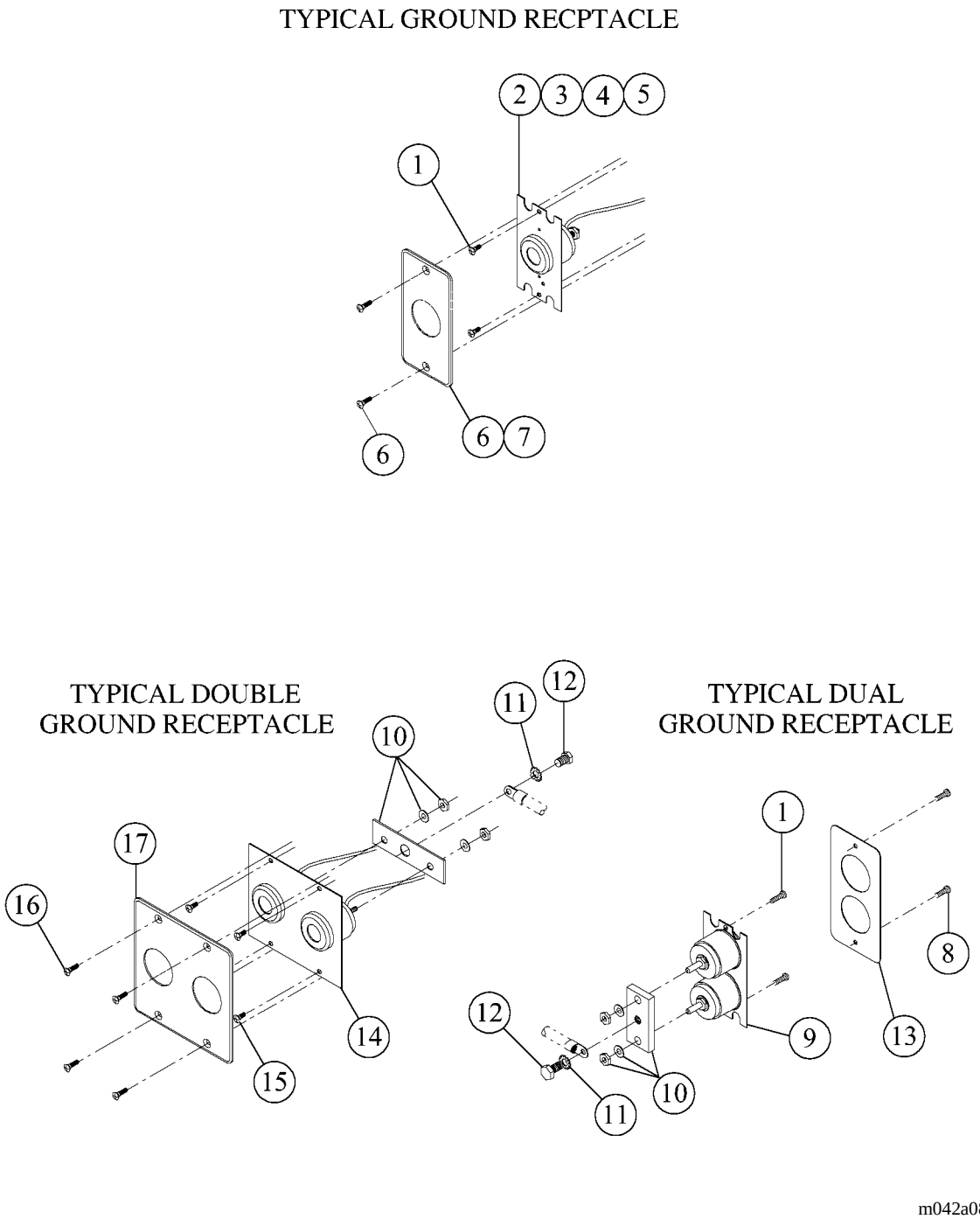

5

Table 5-37. Ground Receptacle

Item Number	Part Number	Quantity	Description
1	16115 (950E)	2	Screw
2	17111 (950E)	1	Ground receptacle, Hampden
3	56694 (950E)	1	Ground receptacle, non-locking
4	56827 (950E)	1	Spacer, ground receptacle
5	33788 (950E)	1	Mounting bracket
6	50680 (950E)	1	Faceplate, ground receptacle
7	55090 (950E) or 56881 (950E)	1	Faceplate, ground (specific purpose engraved vertical, clear) Faceplate, ground (specific purpose engraved horizontal, almond)
8	50590 (950E)	2	Screw
9	31728 (950E)	1	Mounting plate—double ground
10	56906 (950E)	1	Tie bar dual ground (1) gang
11	56825 (950E)	1	Lockwasher
12	50798 (950E)	1	Screw
13	50681 (950E)	1	Faceplate (clear)
14	29113 (950E)	1	Mounting plate
15	16115 (950E)	4	Screw
16	50590 (950E)	4	Screw
17	50696 (950E)	1	2 Gang faceplate (clear) blank

Line Voltage Switch

Figure 5-37. Line Voltage Switch

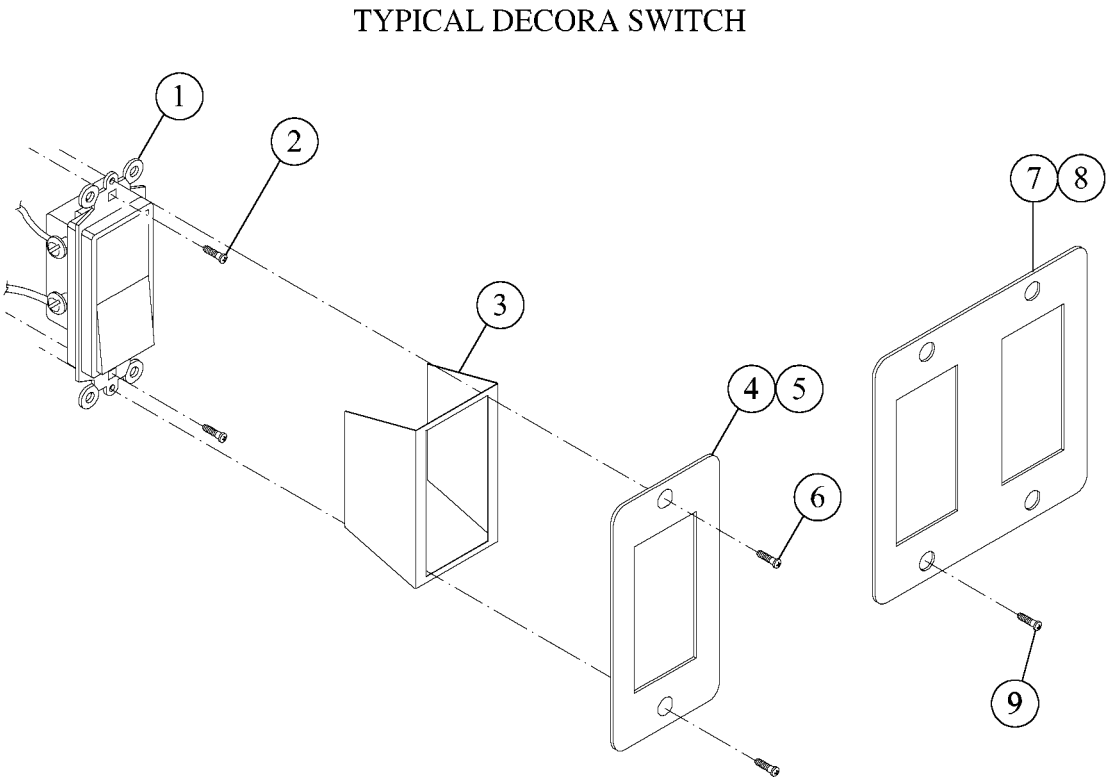

m042a067

5

Table 5-38. Line Voltage Switch

Item Number	Part Number	Quantity	Description
1	32232 (950E) or 32233 (950E)	1	Switch (ivory) 3 Way switch (ivory)
2	16115 (950E)	2	Screw
3	56878 (950E)	1	Insulator, decora style (required for isolated power only)
4	50685 (950E)	1	Switch faceplate (clear) 1 gang
5	54736 (950E) or 54756 (950E) or 54768 (950E)	1	Faceplate, switch (general engraved vertical, clear) Faceplate, switch (general engraved horizontal, almond) Faceplate, switch (general engraved vertical, almond)
6	50590 (950E)	2	Screw
7	50696 (950E)	1	2 Gang faceplate (clear) blank
8	54799 (950E)	1	Faceplate, 2 switches (general engraved, clear)
9	50590 (950E)	4	Screw

Timed/Toggle Switch

Figure 5-38. Timed/Toggle Switch

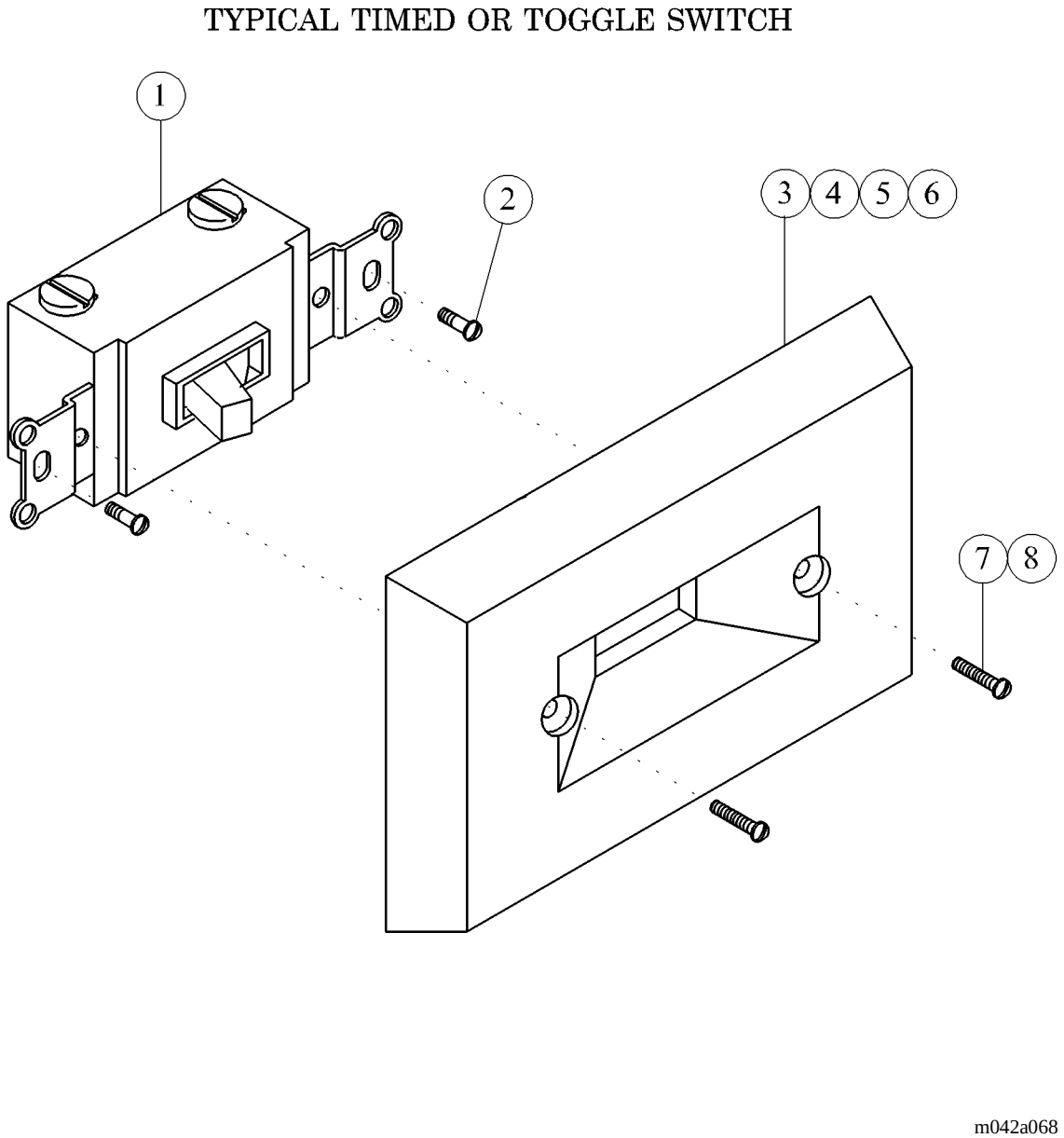

5

Table 5-39. Timed/Toggle Switch

Item Number	Part Number	Quantity	Description
1	56824 (950E) or 28441 (950E) or 54675 (950E)	1	Switch, 3 way toggle (ivory) Dimmer switch (incandescent, ivory) Switch, 3 way toggle (red)
2	16115 (950E)	2	Screw
3	50688 (950E) or 56879 (950E)	1	Faceplate (clear) Faceplate, toggle switch(clear)
4	56901 (950E)	1	Dual toggle faceplate (clear)
5	53888-01 (950E) or 53888-02 (950E)	1	Timer assembly (specific purpose engraved horizontal) Timer assembly (specific purpose engraved vertical)
6	56964 (950E) or 56966 (950E) or 56965 (950E) or 56967 (950E) or 57112 (950E) or 57113 (950E) or 57114 (950E) or 57210 (950E) or 57211 (950E)	1	Faceplate, toggle switch (general engraved, clear) Faceplate, toggle switch (general engraved, almond) Faceplate, toggle switch (general engraved horizontal, almond) Faceplate, 2 gang toggle (general engraved, clear) Faceplate, dimmer switch (general engraved vertical, clear) Dimmer switch faceplate (general engraved vertical, almond) Faceplate, dimmer switch (general engraved horizontal, almond) Timer assembly (general engraved horizontal) Timer assembly (general engraved vertical)
7	50590 (950E)	2	Screw
8	50590 (950E)	4	Screw (used with part numbers 56901 and 56967)

5

Conversion Kit, P991-00 Monitor Mount-P651C991

Figure 5-39. Conversion Kit, P991-00 Monitor Mount-P651C991

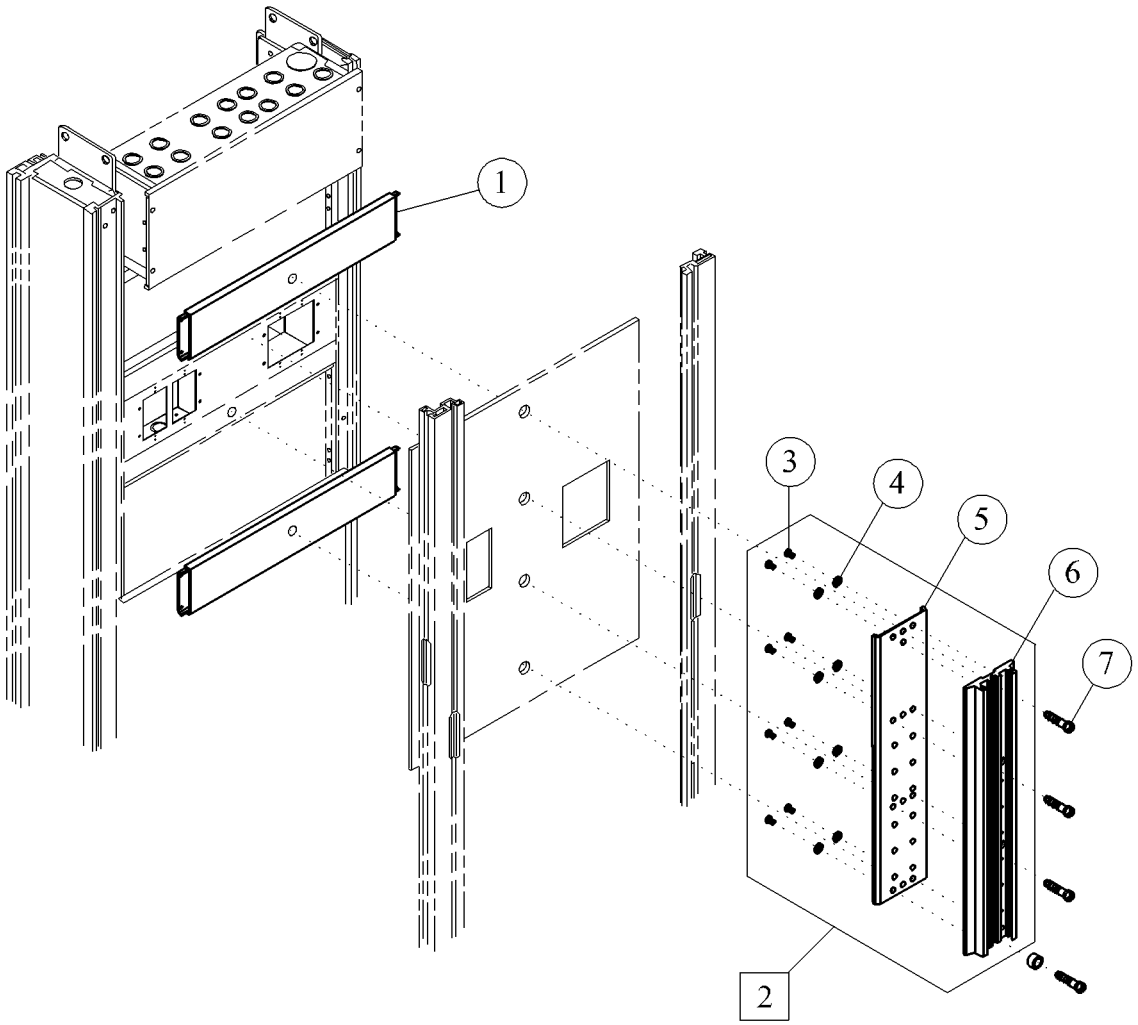

m042a075

Table 5-40. Conversion Kit, P991-00 Monitor Mount-P651C991

Item Number	Part Number	Quantity	Description
1	56750 (950E)	2	Support assembly
2	56749 (950E)	1	Channel/backing plate assembly
3	53063 (950E)	8	Screw, pan head
4	53065-01 (950E)	8	Washer
5	5664039 (950E)	1	Backing plate assembly, monitor mounting channel
6	56637 (950E)	1	Monitor mounting channel
7	5654603 (950E)	4	Screw, pan head

Pivoting Storage Basket-Shallow-P951S03 and Pivoting Waste Basket, Deep-P951W03

Figure 5-40. Pivoting Storage Basket-Shallow-P951S03 and Pivoting Waste Basket, Deep-P951W03

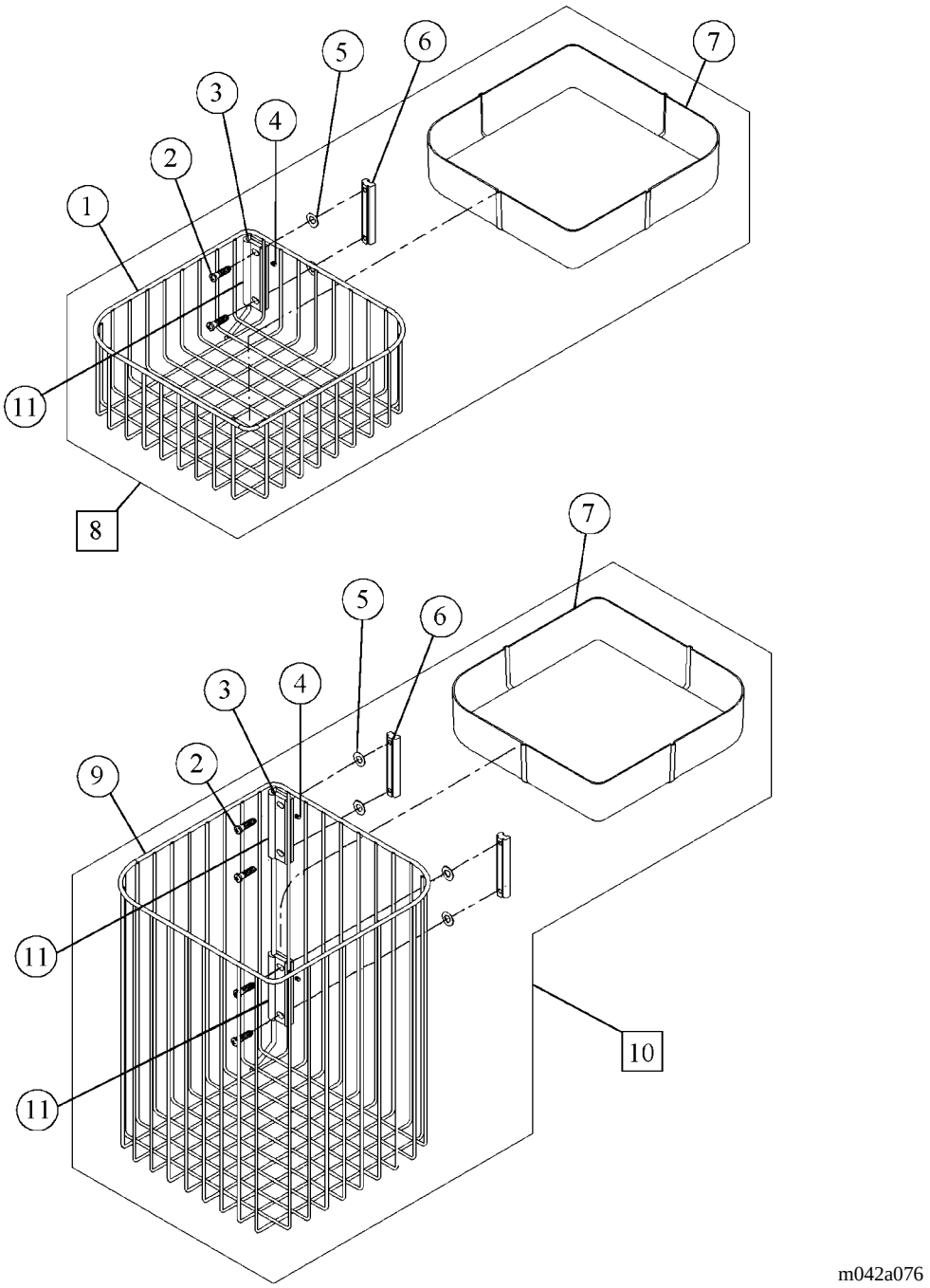

5

Table 5-41. Pivoting Storage Basket-Shallow-P951S03 and Pivoting Waste Basket, Deep-P951W03

Item Number	Part Number	Quantity	Description
1	55202 (950E)	1	Basket-pivoting-small
2	52396 (950E)	2 or 4	Screw
3	54852 (950E)	1 or 2	Hinge hook
4	54850 (950E)	1 or 2	Screw
5	56841 (950E)	2 or 4	Shim washer
6	34027 (950E)	1 or 2	Slide assembly
7	54455 (950E)	1	Liner
8	951S03 (950E)	1	Pivoting storage basket-shallow
9	55205 (950E)	1	Deep swing out basket
10	951W03 (950E)	1	Pivoting waste basket, deep
11	5754339 (950E)	1 or 2	Locking plate, hinge

Basket, Large-P952L01 and Small Storage Basket-P952S01

Figure 5-41. Basket, Large-P952L01 and Small Storage Basket-P952S01

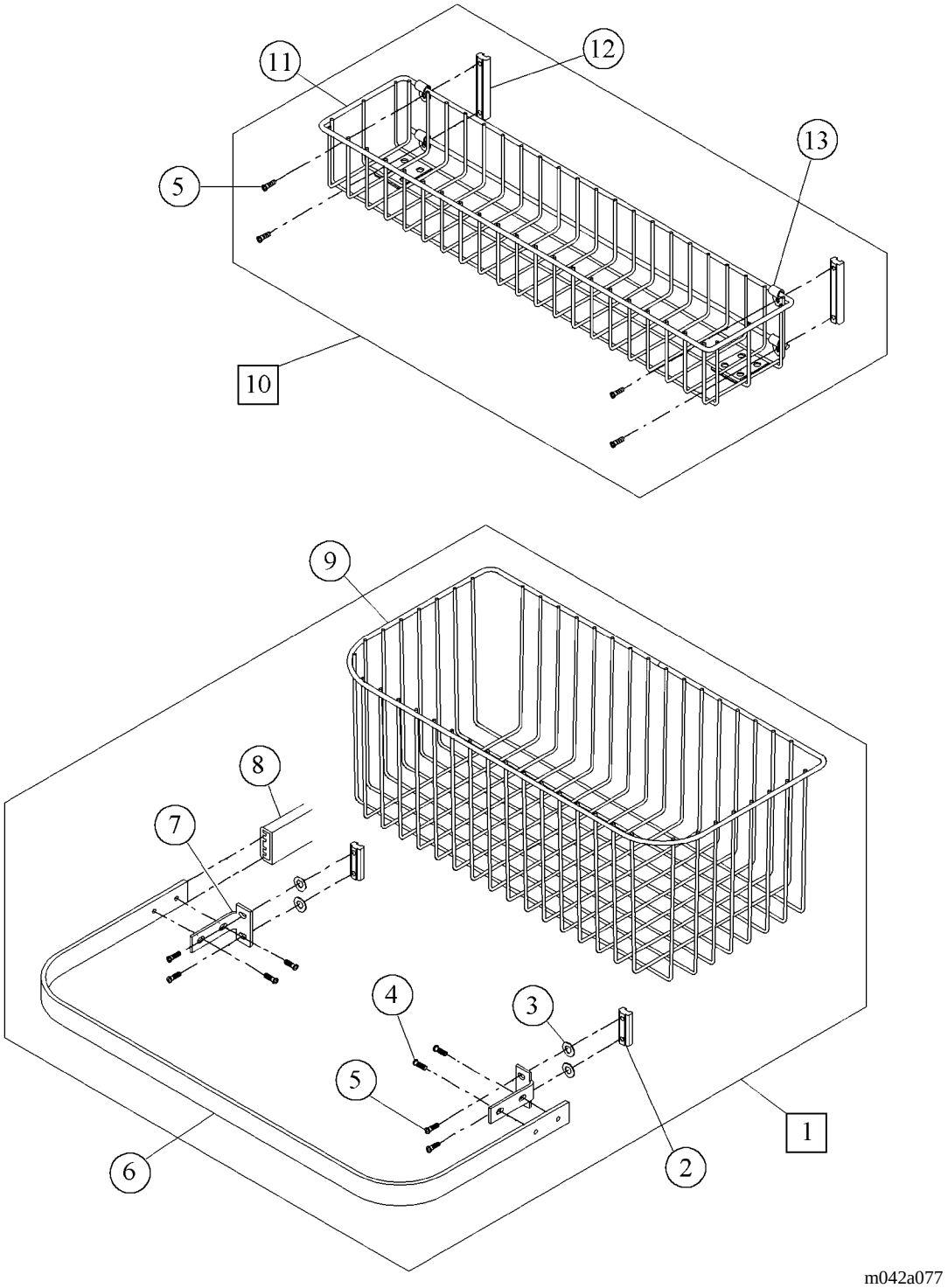

5

Table 5-42. Basket, Large-P952L01 and Small Storage Basket-P952S01

Item Number	Part Number	Quantity	Description
1	952L01 (950E)	1	Basket-large
2	34026 (950E)	2	Slide
3	56841 (950E)	4	Shim washer
4	54105 (950E)	4	Pivot screw
5	15338 (950E)	4	Screw
6	31421 (950E)*	1	Bottle guard support
7	56830-pl (950E)	2	Bottle guard bracket
8	57160 (950E)	1	Bumper blank
9	55223 (950E)	1	Basket-large
10	P952S01 (950E)	1	Small storage basket
11	56921 (950E)	1	Basket, small
12	34027 (950E)	2	Slide assembly
13	55201 (950E)	2	Cable clamp

* Apply a small amount of liquid soap to this part in assembly process.

Bottle Guard Bumper-P953-00

Figure 5-42. Bottle Guard Bumper-P953-00

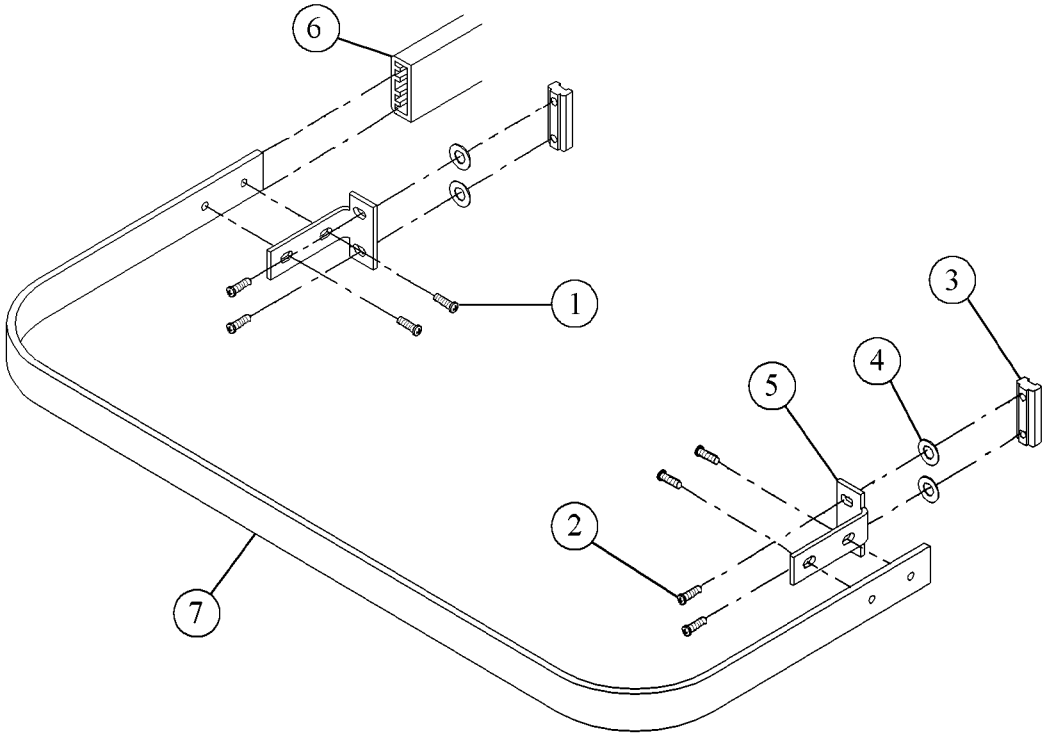

m042a078

Table 5-43. Bottle Guard Bumper-P953-00

Item Number	Part Number	Quantity	Description
1	54105 (950E)	4	Pivot screw
2	15338 (950E)	4	Screw
3	34026 (950E)	2	Slide
4	56841 (950E)	4	Shim washer
5	56830-pl (950E)	1	Bottle guard bracket
6	57160 (950E)	1	Bumper blank
7	31421 (950E)*	1	Bottle guard support

* Apply a small amount of liquid soap to this part in assembly process.

Floor Mounted Bed Locator-P958-00

Figure 5-43. Floor Mounted Bed Locator-P958-00

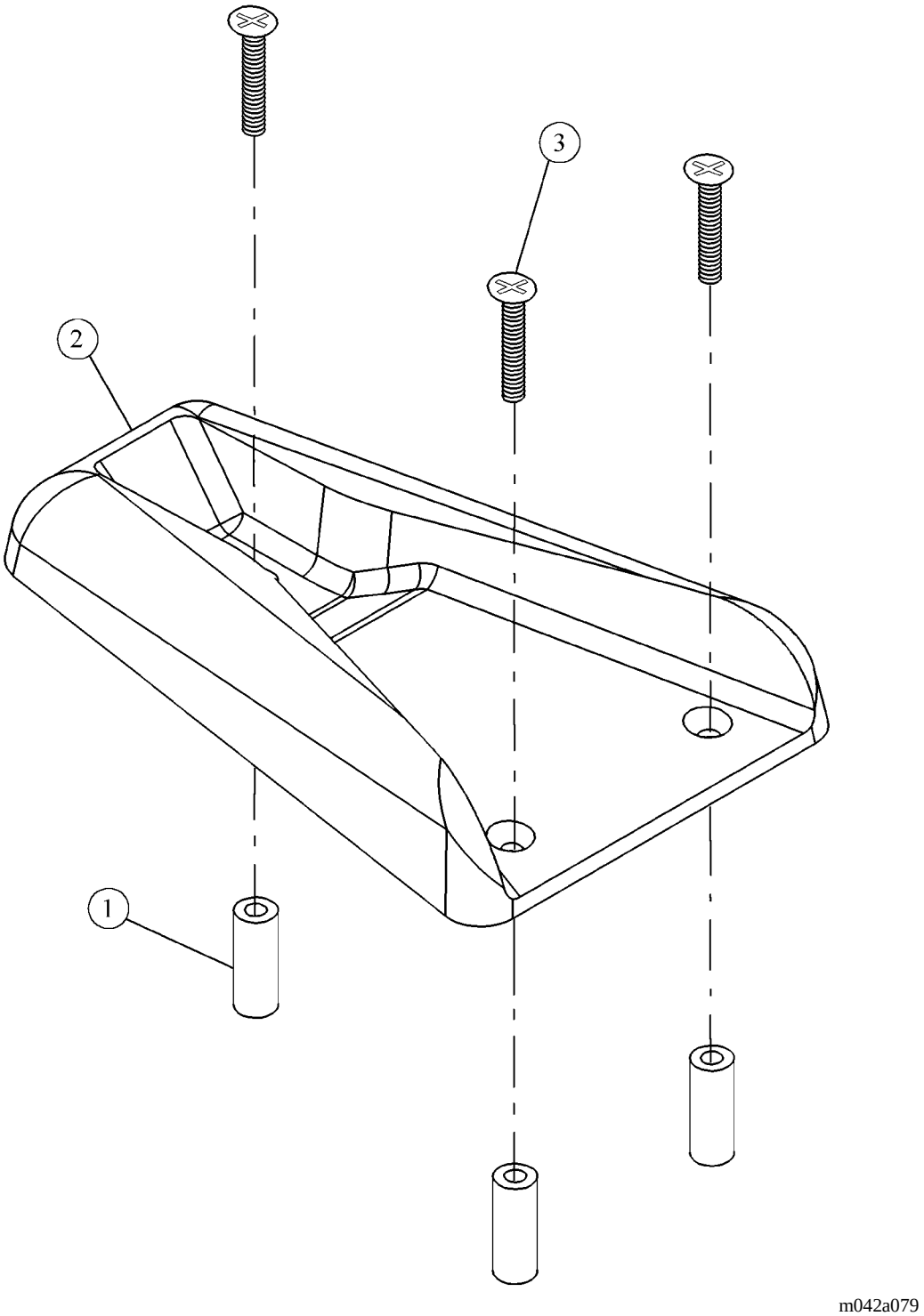

Table 5-44. Floor Mounted Bed Locator-P958-00

Item Number	Part Number	Quantity	Description
1	28957 (950E)	3	Expansion shield
2	28903 (950E)	1	Floor bed locator
3	50999-01 (950E)	3	Screw-flat head

Incandescent/Fluorescent Arm Lamp-P963C02

Figure 5-44. Incandescent/Fluorescent Arm Lamp-P963C02

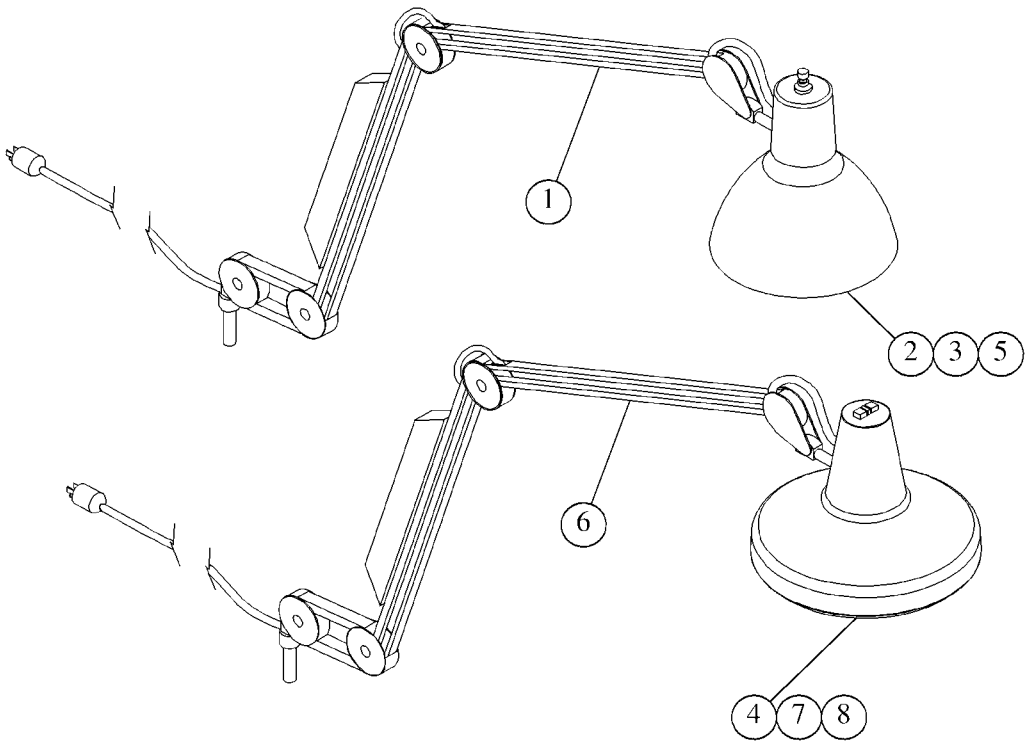

m042a082

Table 5-45. Incandescent/Fluorescent Arm Lamp-P963C02

Item Number	Part Number	Quantity	Description
1	55924 (950E)	1	Arm lamp, incandescent, 100 watt maximum
2	SA8615 (950E)	1	Safeline coated bulb
3	SA4293 (950E)	1	Louvered light deflector (grill)
4	SA7330 (950E)	1	Louvered light deflector (grill)
5	SA4234 (950E)	1	Lamp shade, incandescent
6	55925 (950E)	1	Arm lamp, incandescent/fluorescent
7	TBD	1	Flourescent bulb
8	SA4233 (950E)	1	Lamp shade, incandescent/flourescent

Mount, Arm Light-M670E2511 and P963M00

Figure 5-45. Mount, Arm Light

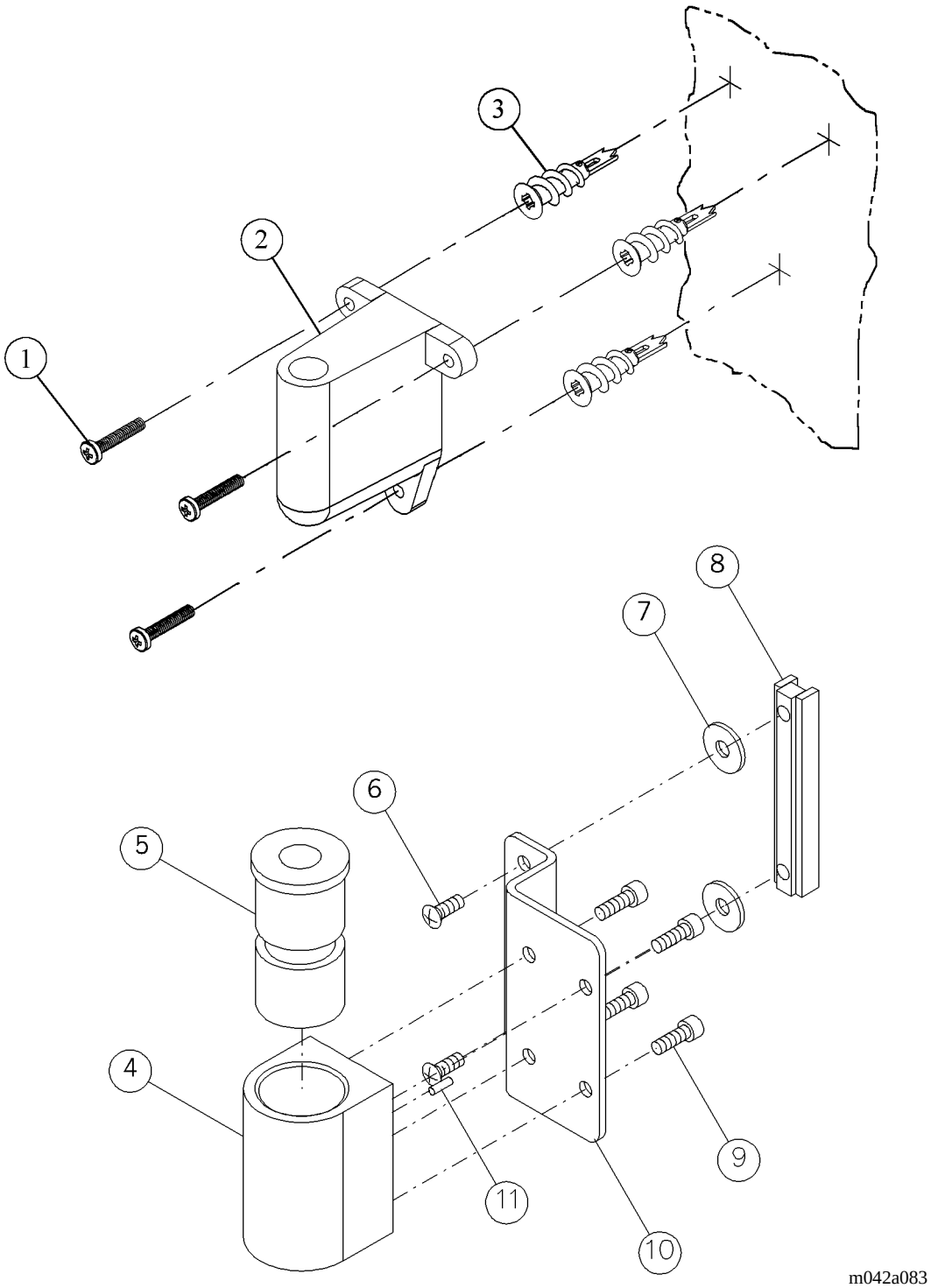

5

Table 5-46. Mount, Arm Light

Item Number	Part Number	Quantity	Description
1	D15708 (950E)	3	Screw
2	55926 (950E)	1	Arm lamp bracket mounting
3	56787 (950E)	1	IV block drilled
4	52301 (950E)	1	Adapter
5	15338 (950E)	2	Screw
6	56841 (950E)	2	Shim washer
7	34027 (950E)	1	Slide assembly
8	51012 (950E)	4	Screw
9	94W878-39 (950E)	1	Mounting bracket
10	54185-01 (950E)	1	Roll pin

STAT Clock/Timer Pod Mounted-P964B-00

Figure 5-46. STAT Clock/Timer Pod Mounted-P964B-00

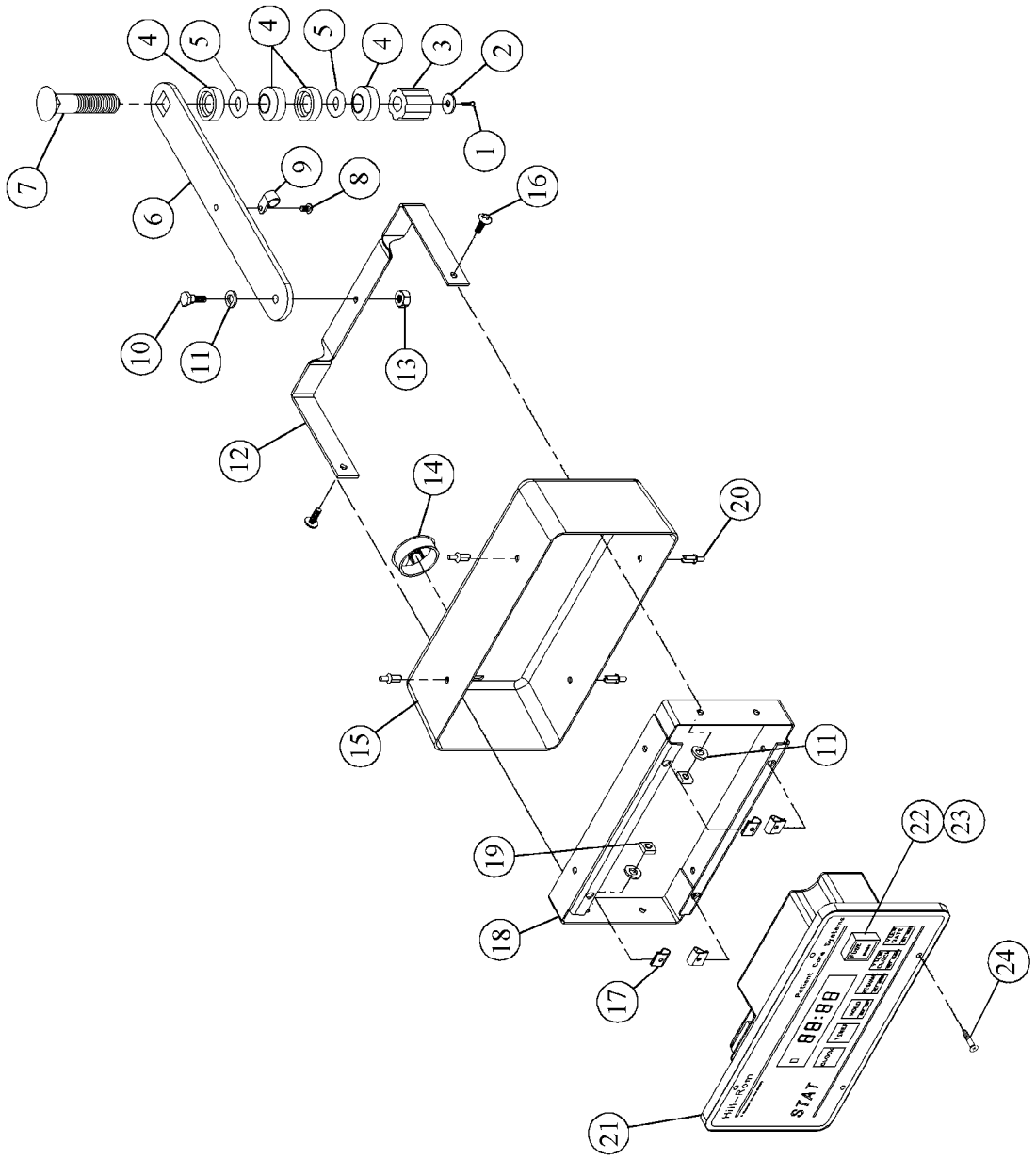

m042a084

Table 5-47. STAT Clock/Timer Pod Mounted-P964-00

Item Number	Part Number	Quantity	Description
1	53397-03 (950E)	1	Screw
2	52386 (950E)	1	Washer
3	34218 (950E)	1	Compression nut
4	56530 (950E)	4	Washer, beveled nylon
5	50126 (950E)	2	O-ring
6	33718 (950E)	1	Arm
7	33704 (950E)	1	Bolt
8	52604-02 (950E)	1	Screw
9	54627 (950E)	1	Cable clamp
10	56398 (950E)	1	Shoulder bolt
11	33721 (950E)	3	Nylon washer
12	33693 (950E)	1	Bail
13	56400 (950E)	1	Nut, shakeproof
14	33720 (950E)	1	Hole plug
15	33701 (950E)	1	Cover
16	51637 (950E)	2	Screw
17	31992 (950E)	4	Speed nut
18	33694 (950E)	1	Pivot frame
19	33653 (950E)	2	Nut
20	33719 (950E)	4	Rivet
21	967-00 (950E) or 967B00 (950E)	1	STAT clock timer (black face) STAT clock timer (white face)
22	SA4302 (950E)	1	Fuse—1/4 amp used w/ 967-00
23	SA3784 (950E)	1	Fuse holder used w/ 967-00
24	4292 (950E)	4	Screw
25	P964B00 (950E)	1	Fuse—Stat clock timer pod mounted (not shown)

Mount Assembly-Exam Plus Light-P965M01

Figure 5-47. Mount Assembly-Exam Plus Light-P965M01

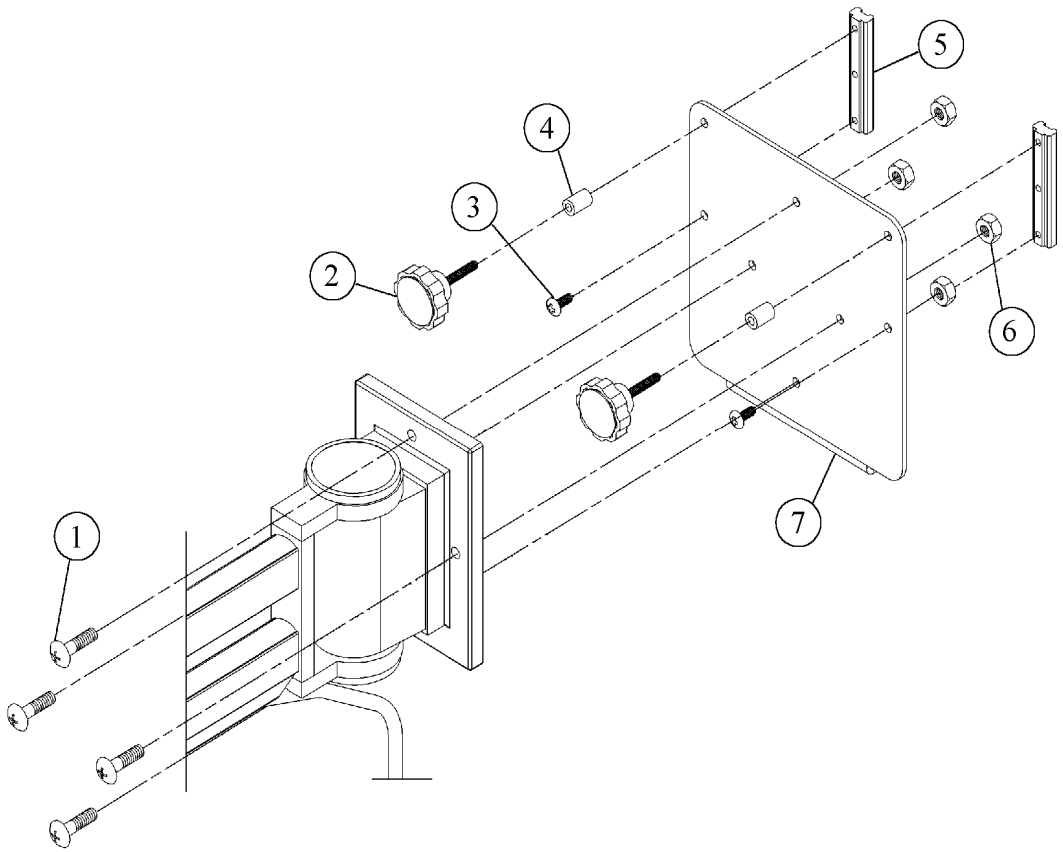

m042a085

Table 5-48. Mount Assembly-Exam Plus Light-P965M01

Item Number	Part Number	Quantity	Description
1	53062-01 (950E)	4	Screw, pan head
2	33167 (950E)	2	Knob
3	51637 (950E)	2	Screw
4	29826 (950E)	2	Spacer
5	52658 (950E)	2	Slide insert
6	33680 (950E)	4	Locknut
7	5330039 (950E)	1	Base, Exam Plus mount

Universal Holder, Multipoint-P970A01

Figure 5-48. Universal Holder, Multipoint-P970A01

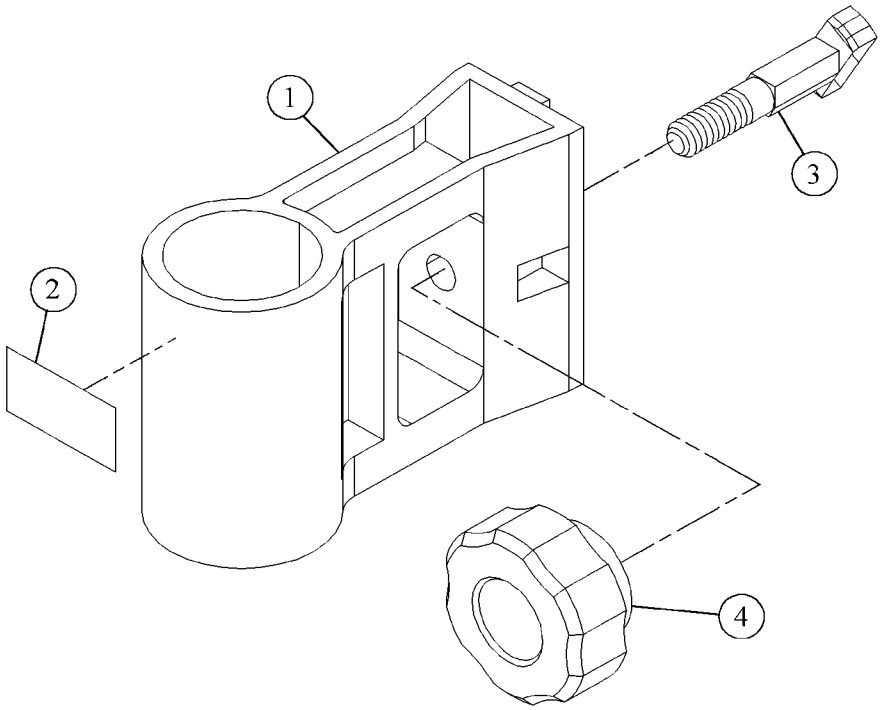

m042a086

Table 5-49. Universal Holder, Multipoint-P970A01

Item Number	Part Number	Quantity	Description
1	54526 (950E)	1	Holder-body
2	53274 (950E)	1	Label-patent
3	53235 (950E)	1	Lock-multipoint mount
4	53225 (950E)	1	Knob

Bird Blender Mount-P973-B1

Figure 5-49. Bird Blender Mount-P973-B1

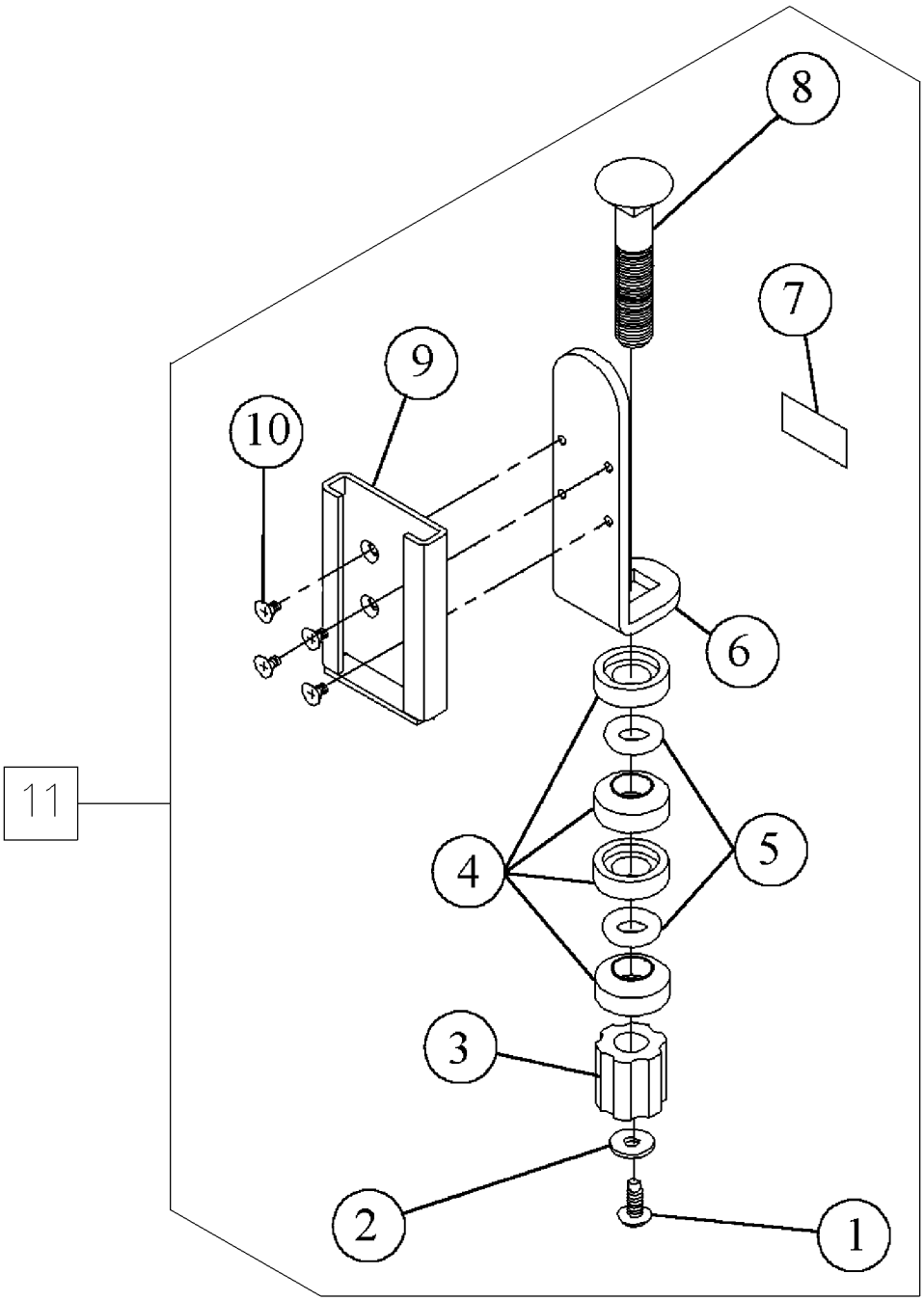

m042a087

Table 5-50. Bird Blender Mount-P973-B1

Item Number	Part Number	Quantity	Description
1	53397-03 (950E)	1	Screw
2	52386 (950E)	1	Washer
3	34218 (950E)	1	Compression nut
4	56530 (950E)	4	Washer, beveled nylon
5	50126 (950E)	2	O-ring
6	5598939 (950E)	1	Bracket, slide type
7	51211 (950E)	1	Label
8	33704 (950E)	1	Bolt
9	56002 (950E)	1	Dovetail bracket
10	5487001 (950E)	4	Short screw, flathead
11	973-B1 (950E)	1	Bird blender mount

Utility Light-Track Mounted-P966A00

Figure 5-50. Utility Light-Track Mounted-P966A00

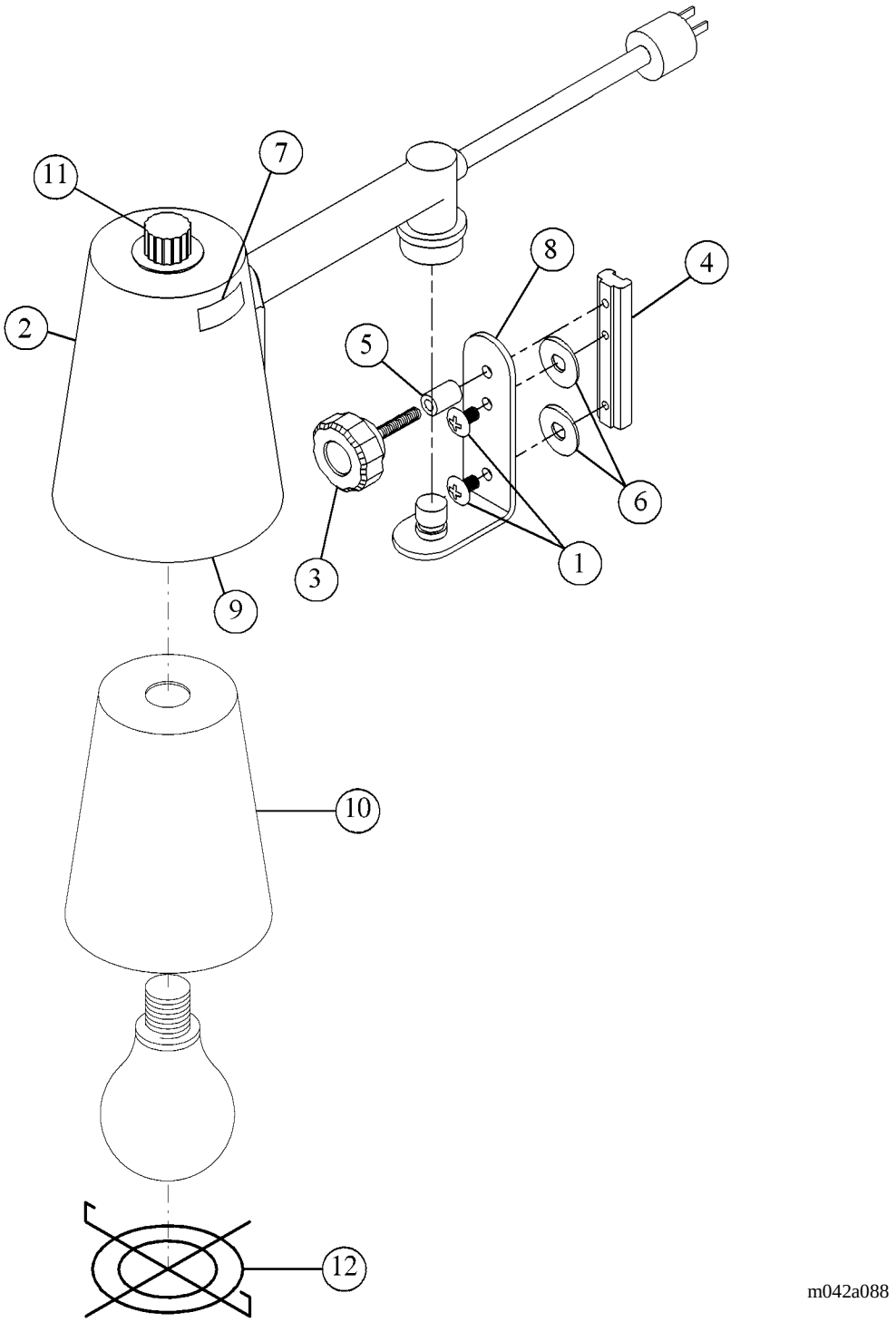

Table 5-51. Utility Light-Track Mounted-P966A00

Item Number	Part Number	Quantity	Description
1	51637 (950E)	2	Screw
2	51571 (950E)	1	Lamp-966 track light
3	33167 (950E)	1	Knob
4	32332 (950E)	1	Slide, track light
5	29826 (950E)	1	Spacer
6	56841 (950E)	2	Shim washer
7	51862 (950E)	1	Label-identity
8	SA8749 (950E)	1	Bracket
9	SA8795 (950E)	1	Guard
10	SA8796 (950E)	1	Reflector
11	SA4434 (950E)	1	Light socket set
12	SA4898 (950E)	1	Snap on guard

Sphygmomanometer Bracket, Aneroid-P975-01

Figure 5-51. Sphygmomanometer Bracket, Aneroid-P975-01

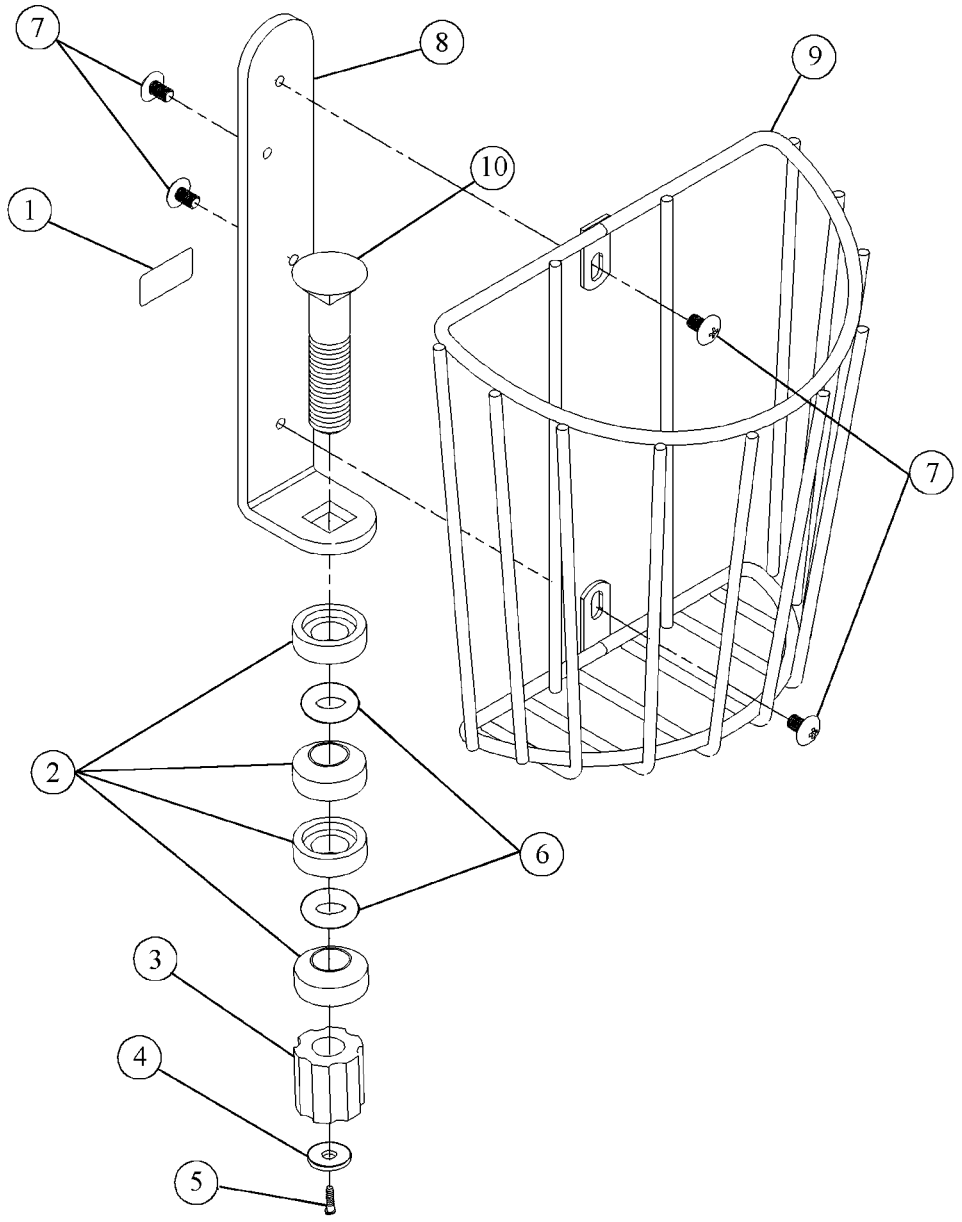

m042a089

Table 5-52. Sphygmomanometer Bracket, Aneroid-P975-01

Item Number	Part Number	Quantity	Description
1	51211 (950E)	1	Label
2	56530 (950E)	4	Washer, beveled nylon
3	34218 (950E)	1	Compression nut
4	52386 (950E)	1	Washer
5	53397-03 (950E)	1	Screw
6	50126 (950E)	2	O-ring
7	54610-01 (950E)	4	Screw
8	5700939 (950E)	1	Sphygmomanometer support bracket
9	56875 (950E)	1	Cuff basket
10	33704 (950E)	1	Bolt

Utility/Bottle Slide Mount-P973-01

Figure 5-52. Utility/Bottle Slide Mount-P973-01

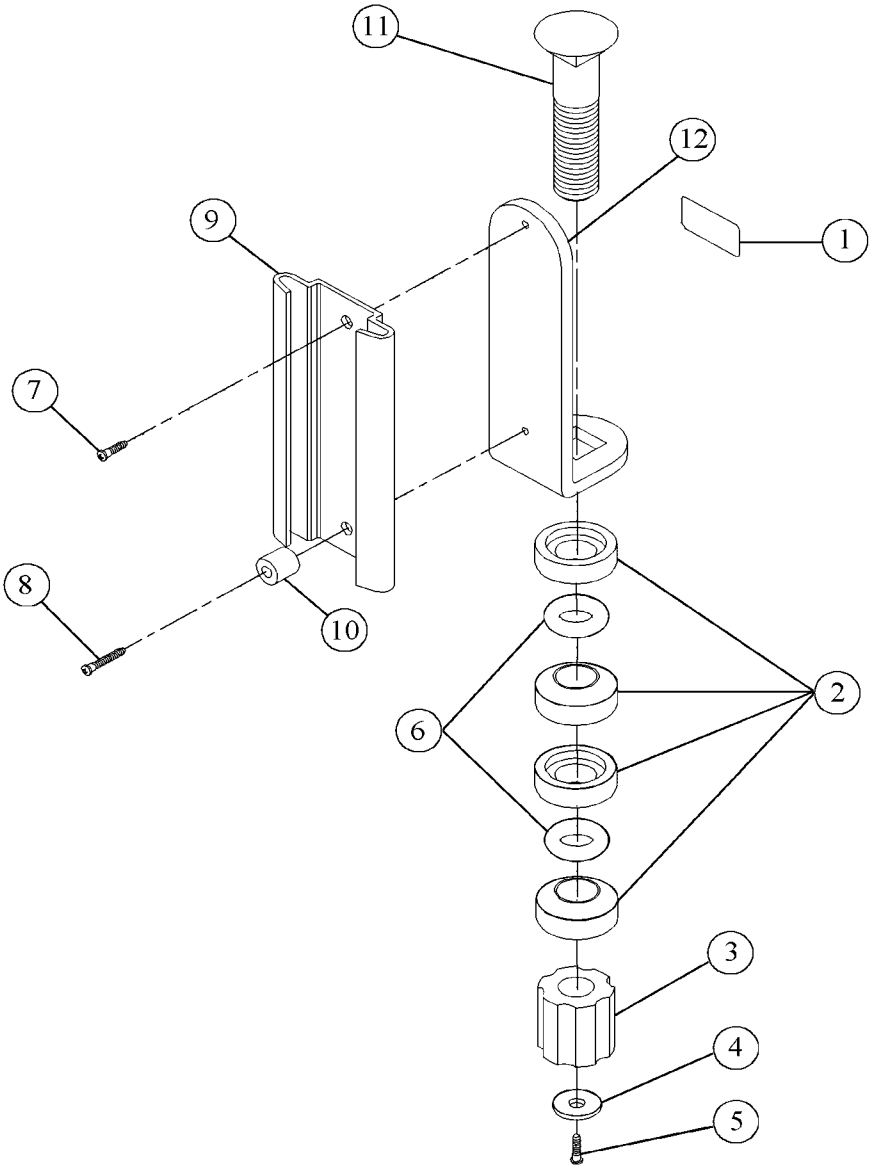

m042a090

Table 5-53. Utility/Bottle Slide Mount-P973-01

Item Number	Part Number	Quantity	Description
1	53274 (950E)	1	Label-patent
2	56530 (950E)	4	Washer, beveled nylon
3	34218 (950E)	1	Compression nut
4	52386 (950E)	1	Washer
5	53397-03 (950E)	1	Screw
6	50126 (950E)	2	O-ring
7	50891-03 (950E)	1	Screw
8	50891-07 (950E)	1	Screw
9	50561 (950E)	1	Bracket
10	50560 (950E)	1	Spacer-nylon
11	33704 (950E)	1	Bolt
12	33491 (950E)	1	Bracket-utility mount

Opthalmoscope Mount-P973-S1

Figure 5-53. Opthalmoscope Mount-P973-S1

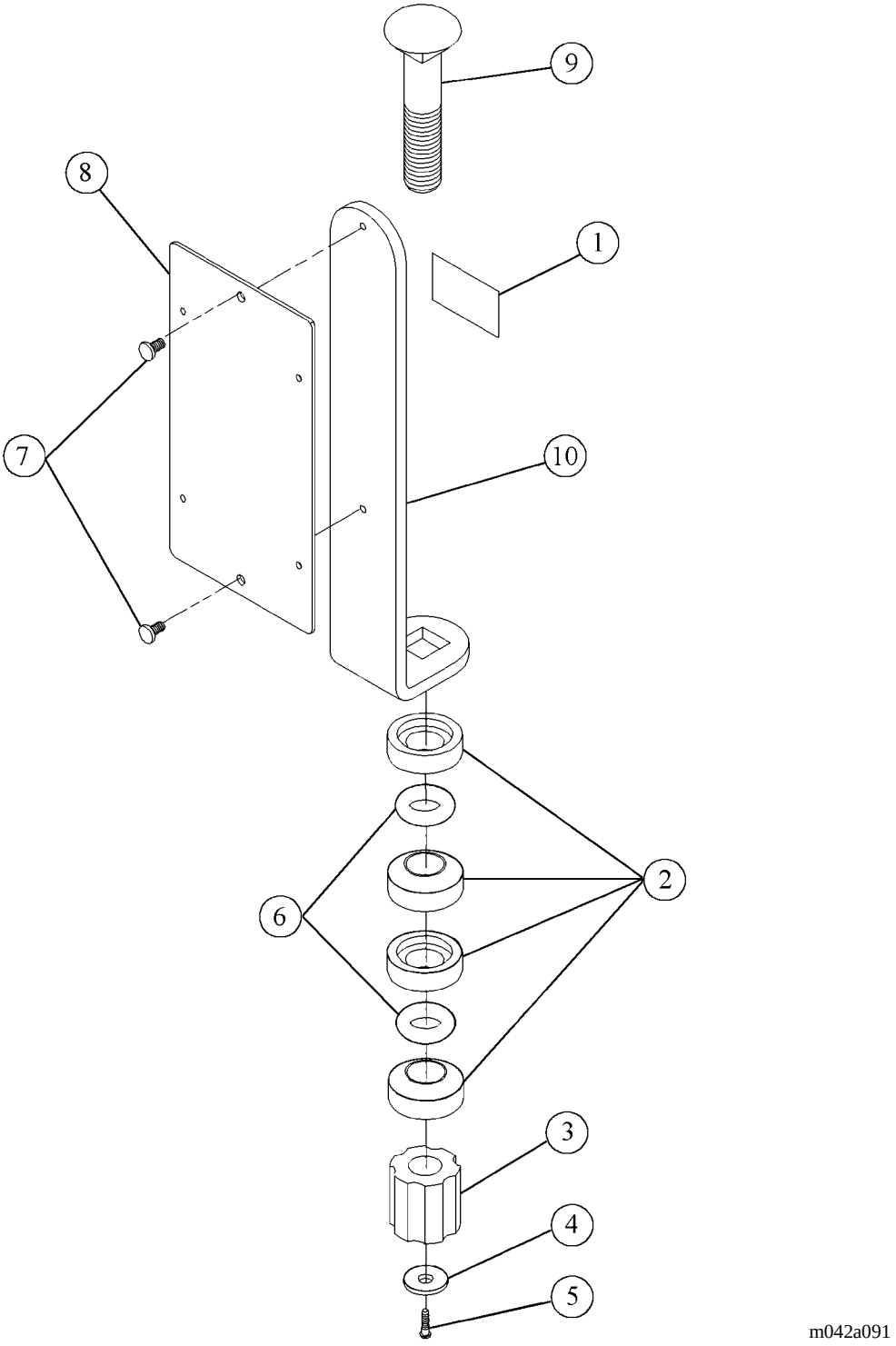

5

Table 5-54. Opthalmoscope Mount-P973-S1

Item Number	Part Number	Quantity	Description
1	53274 (950E)	1	Label-patent
2	56530 (950E)	4	Washer, beveled nylon
3	34218 (950E)	1	Compression nut
4	52386 (950E)	1	Washer
5	53397-03 (950E)	1	Screw
6	50126 (950E)	2	O-ring
7	50891-02 (950E)	2	Screw
8	5599039 (950E)	1	Sub plate
9	33704 (950E)	1	Bolt
10	5599139 (950E)	1	Mounting bracket

Utility Mount, Short Post-P972-01 and Long Post-P972L01

Figure 5-54. Utility Mount, Short Post-P972-01 and Long Post-P972L01

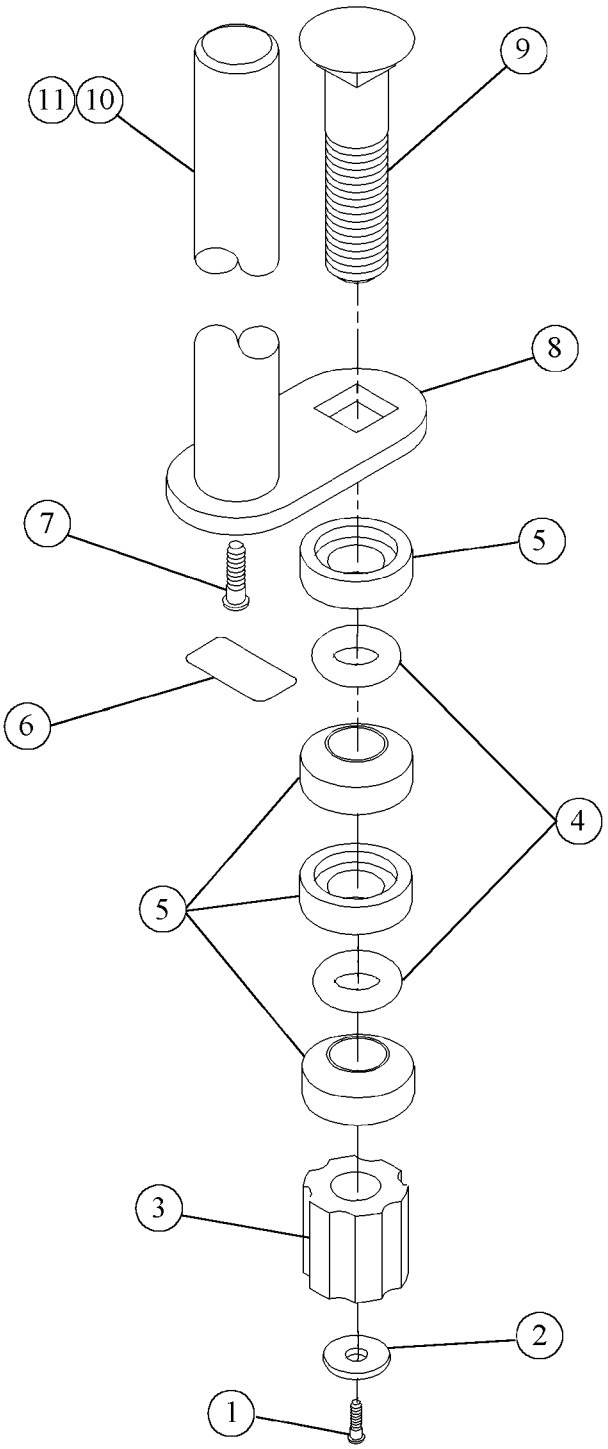

5

Table 5-55. Utility Mount, Short Post-P972-01 and Long Post-P972L01

Item Number	Part Number	Quantity	Description
1	53397-03 (950E)	1	Screw
2	52386 (950E)	1	Washer
3	34218 (950E)	1	Compression nut
4	50126 (950E)	2	O-ring
5	56530 (950E)	4	Washer, beveled nylon
6	53274 (950E)	1	Label-patent
7	4921 (950E)	1	Screw, truss head
8	33664 (950E)	1	Transducer plate
9	33704 (950E)	1	Bolt
10	33665 (950E)	1	Transducer holder
11	53270 (950E)	1	Infusion pump holder

Sphygmomanometer Mount, Mercurial-P974-01

Figure 5-55. Sphygmomanometer Mount, Mercurial-P974-01

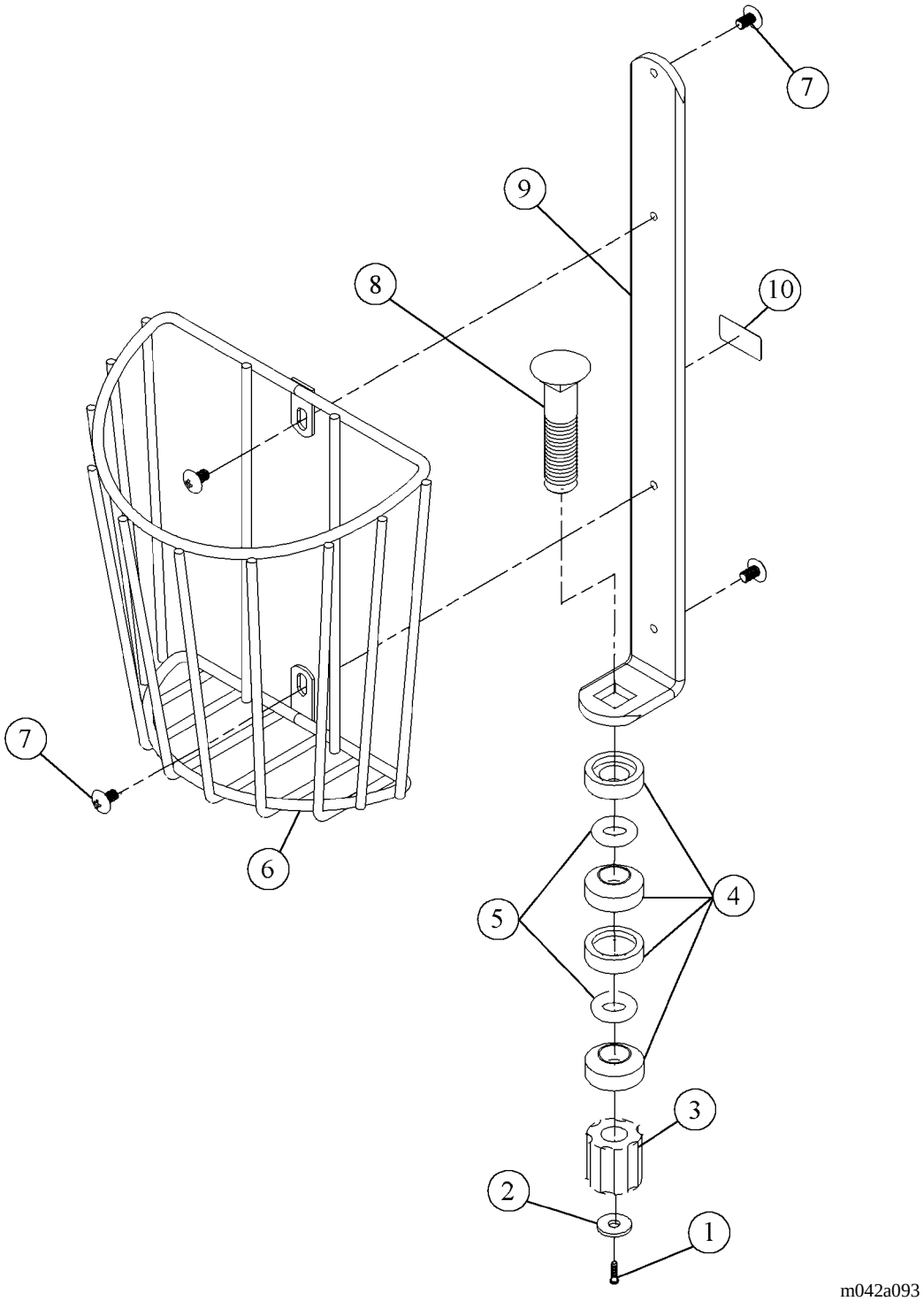

5

Table 5-56. Sphygmomanometer Mount, Mercurial-P974-01

Item Number	Part Number	Quantity	Description
1	53397-03 (950E)	1	Screw
2	52386 (950E)	1	Washer
3	34218 (950E)	1	Compression nut
4	56530 (950E)	4	Washer, beveled nylon
5	50126 (950E)	2	O-ring
6	56875 (950E)	1	Cuff basket
7	54610-01 (950E)	4	Screw
8	33704 (950E)	1	Bolt
9	57008-39 (950E)	1	Sphygmomanometer support bracket
10	53274 (950E)	1	Label-patent

Infusion Pump/IV Holder-P984-00

Figure 5-56. Infusion Pump/IV Holder-P984-00

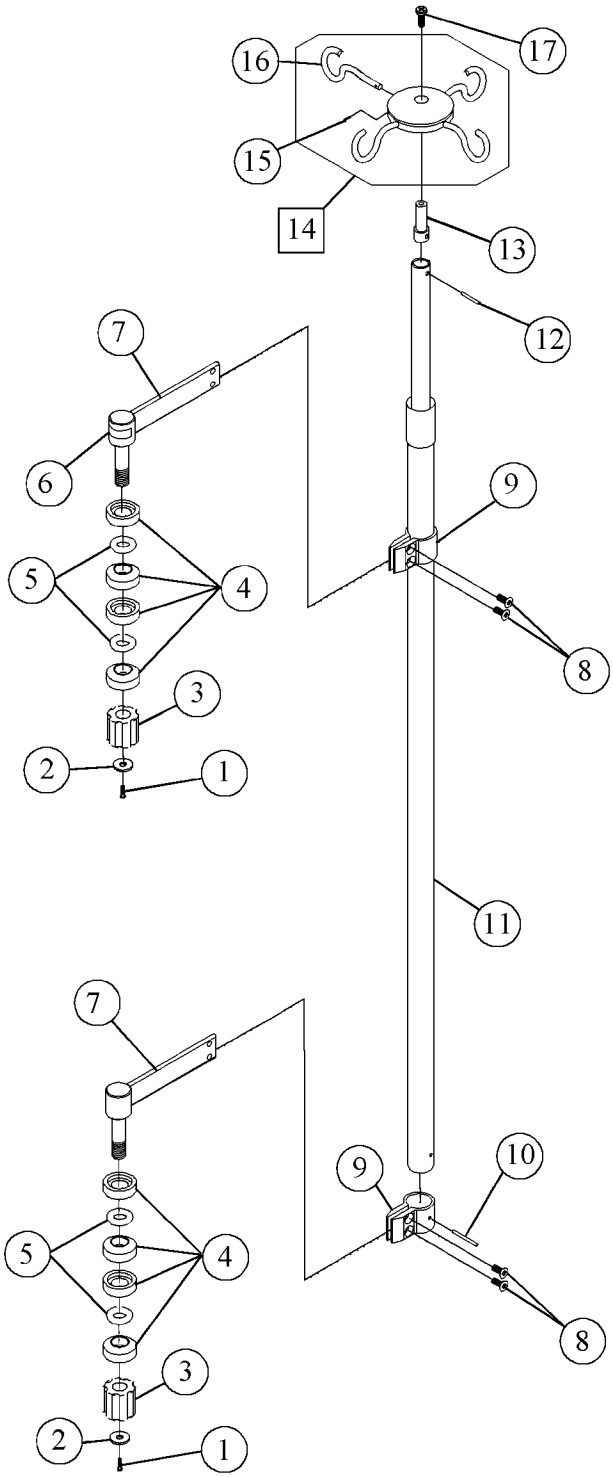

m042a094

Table 5-57. Infusion Pump/IV Holder-P984-00

Item Number	Part Number	Quantity	Description
1	53397-03 (950E)	2	Screw
2	52396 (950E)	2	Washer
3	34218 (950E)	2	Compression nut
4	56530 (950E)	8	Washer, beveled nylon
5	50126 (950E)	4	O-ring
6	53274 (950E)	1	Label-patent
7	57710pl (950E)	2	Support assembly
8	52363 (950E)	4	Screw
9	52308 (950E)	2	Clamp, IV pole
10	52316 (950E)	1	Roll pin
11	52306 (950E)	1	Hanger rod assembly
12	55736 (950E)	1	Roll pin
13	52300 (950E)	1	Hub insert
14	52298 (950E)	1	Hub assembly
15	35018 (950E)	4	Roll pin
16	35003 (950E)	4	IV. hook
17	53063-02 (950E)	1	Screw

Swivel Shelf, Stabilet Freestanding Infant Warmer-P986S01

Figure 5-57. Swivel Shelf, Stabilet Freestanding Infant Warmer-P986S01

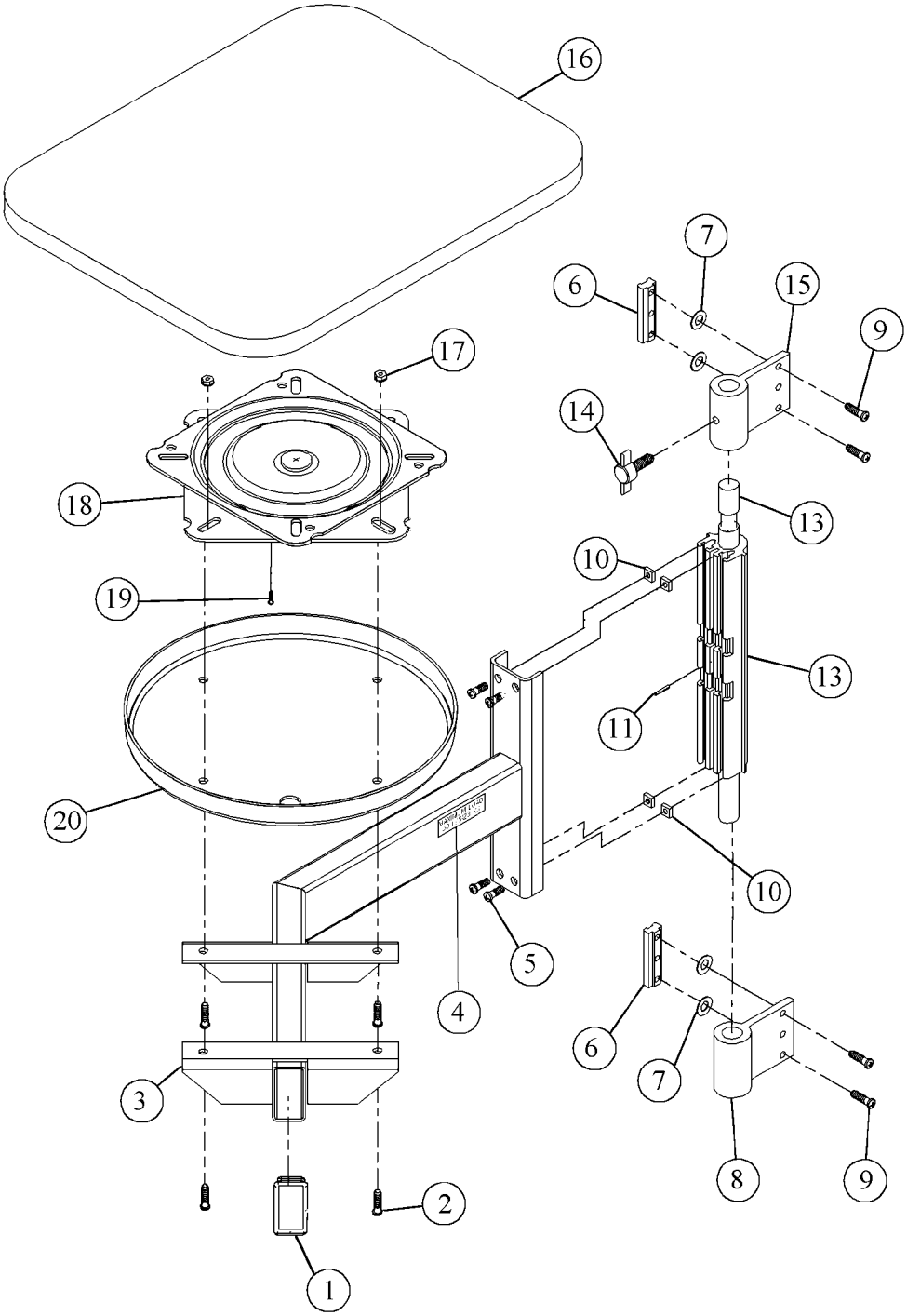

m042a095

Table 5-58. Swivel Shelf, Stabilet Freestanding Infant Warmer-P986S01

Item Number	Part Number	Quantity	Description
1	53406 (950E)	1	Insert cap glide
2	50853-01 (950E)	4	Hex head bolt
3	5450739 (950E)	1	Arm assembly, shelf
4	54607 (950E)	1	Label, load
5	51637 (950E)	4	Screw
6	34001 (950E)	2	Slide insert
7	56841 (950E)	4	Shim washer
8	54026 (950E)	1	Equipment holder
9	52396 (950E)	4	Screw
10	33653 (950E)	4	Nut
11	51695 (950E)	1	Roll pin
12	54595 (950E)	1	Rivet
13	54596pl (950E)	1	Bar, support
14	53913 (950E)	1	Knob assembly
15	54597 (950E)	1	Equipment holder-tapped
16	54497 (950E)*	1	Top swivel shelf
17	53242 (950E)	4	Locknut
18	54899 (950E)	1	Swivel shelf, Stabilet
19	50854-03 (950E)	4	Pan head screw
20	55579 (950E)	1	Cover

* Specify high pressure laminate color.

Resuscitator Bag Holder-P1022PH

Figure 5-58. Resuscitator Bag Holder-P1022PH

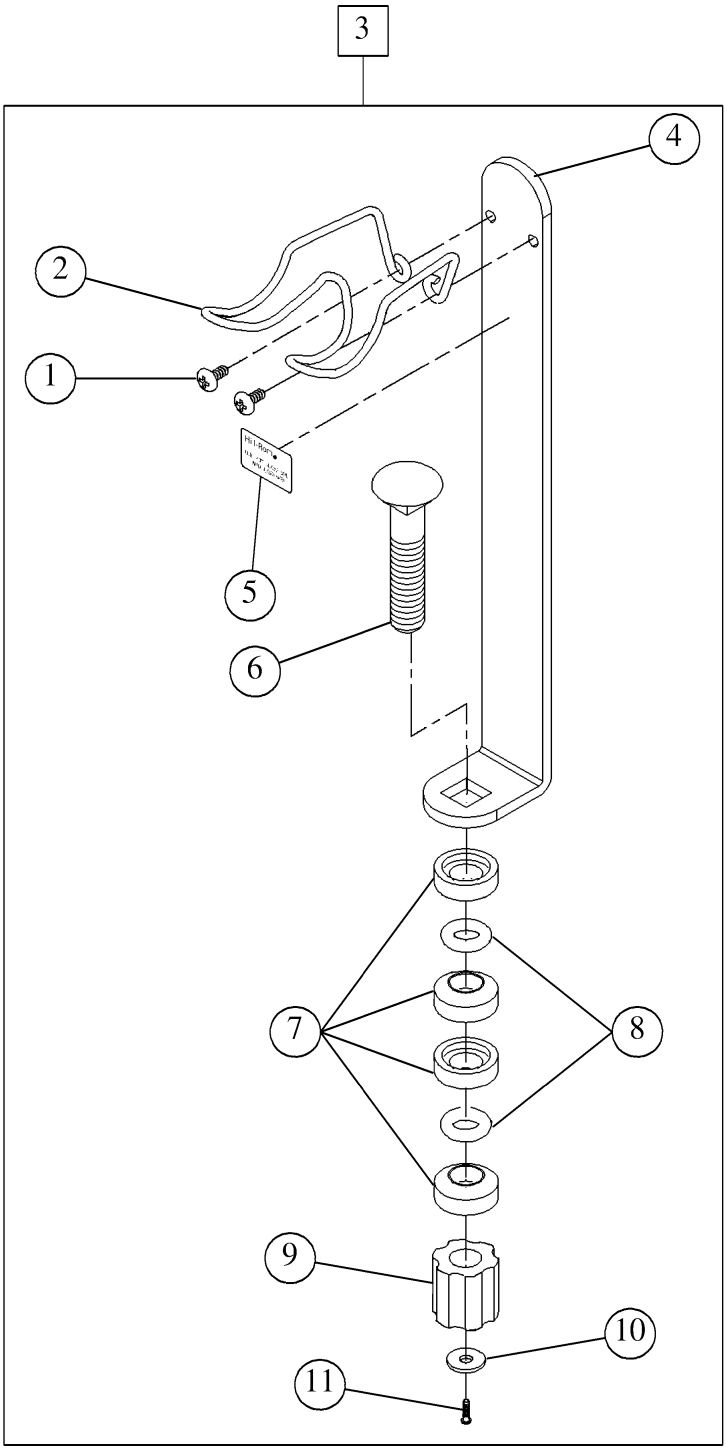

m042a096

5

Table 5-59. Resuscitator Bag Holder-P102201 and P1022PH

Item Number	Part Number	Quantity	Description
1	54610-01 (950E)	2	Screw
2	51886 (950E)	1	Holder-manual resuscitator
3	1022ph (950E)	1	Holder-resuscitator bag
4	5640339 (950E)	1	Support bracket, resuscitator bag
5	53274 (950E)	1	Label-patent
6	33704 (950E)	1	Bolt
7	56530 (950E)	4	Washer, beveled nylon
8	50126 (950E)	2	O-ring
9	34218 (950E)	1	Compression nut
10	52386 (950E)	1	Washer
11	53397-03 (950E)	1	Screw

Circuit Breaker Panel

Figure 5-59. Circuit Breaker Panel

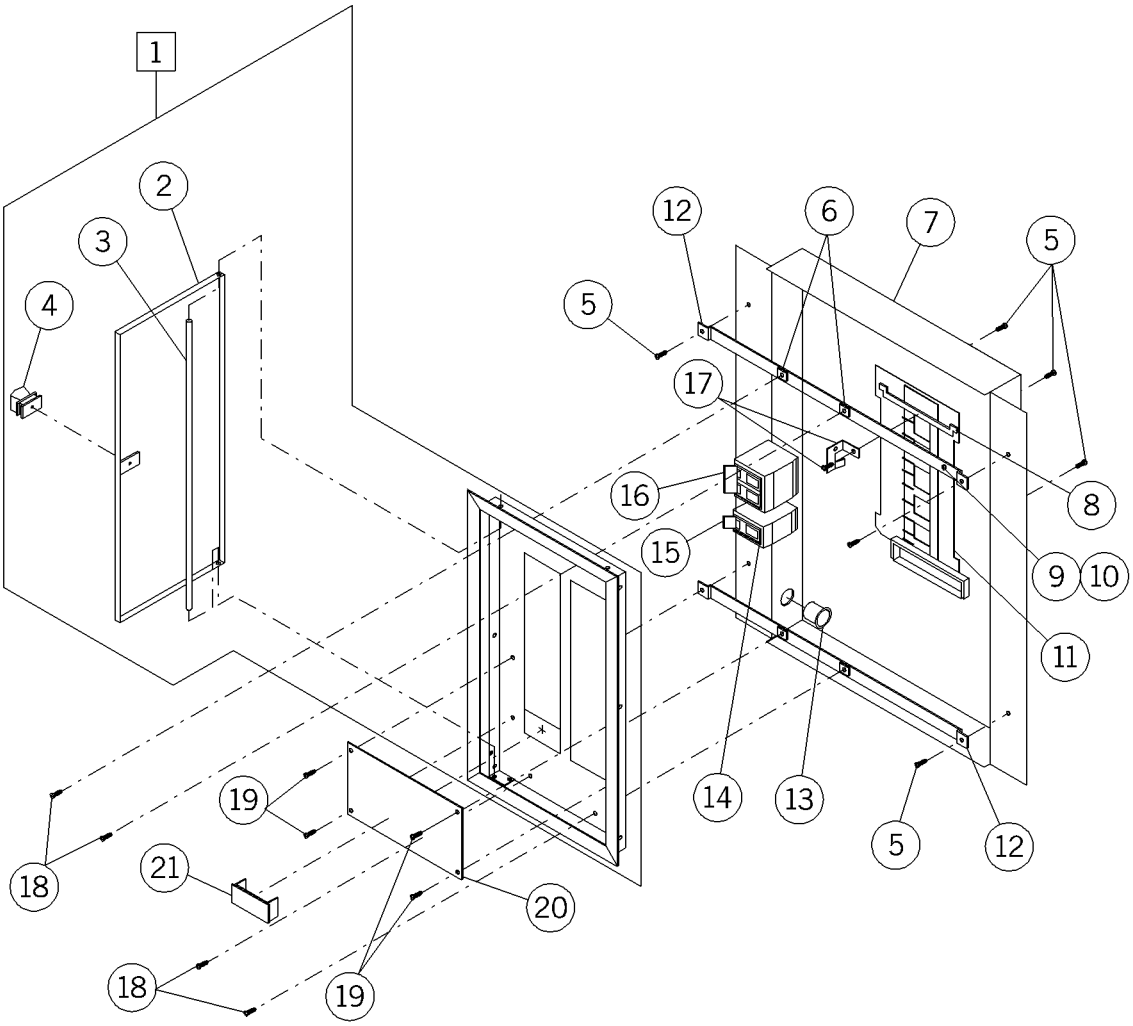

m042a144

Table 5-60. Circuit Breaker Panel

Item Number	Part Number	Quantity	Description
1	50289 (950E)	1	Dead front/door assembly
2	50269 (950E)	1	Breaker door
3	50350 (950E)	1	Hinge pin
4	50276 (950E)	1	Slide catch
5	393 (950E)	8	Screw
6	50265-01 (950E)	4	Nut retainer
7	52711-42 (950E)	1	Tub assembly c.b. panel—painted
8	58575 (950E)	2	Tie bar, single pole main
9	52243-07 (950E)	1	Screw (not shown)
10	15250 (950E)	1	Locknut washer base (not shown)
11	58556-12(950E) or 58556-18(950E) or 52712-12(950E) or 52712-18(950E)	1	Load center interior
12	50088 (950E)	2	Bridge
13	31047 (950E)	4	Snap bushing
14	29710 (950E) or 29709 (950E)	1	Lighting label Receptacle label

Item Number	Part Number	Quantity	Description
15	5009415 (950E) or 5009420 (950E) or 5009430 (950E) or 5009450 (950E) or	1	Circuit breaker, 1", 1 pole
	5011115 (950E) or 5011120 (950E) or		Circuit breaker, 1/2", 1 pole
	5009615 (950E) or 5009620 (950E) or 5009630 (950E) or 5009650 (950E) or 5009670 (950E) or		Circuit breaker, 1", 2 pole
	5270515 (950E) or 5270520 (950E)		Circuit breaker, 1/2", 2pole

5

Item Number	Part Number	Quantity	Description
16	5009415 (950E) or 5009420 (950E) or 5009430 (950E) or 5009450 (950E) or 5009615 (950E) or 5009620 (950E) or 5009630 (950E) or 5009650 (950E) or 5009670 (950E) or 5012030 (950E) or 5012050 (950E) or 5012070 (950E)	1	Main circuit breaker, 1 pole Main circuit breaker, 2 pole Main circuit breaker, 3 pole
17	58574 (950E) or 52706 (950E)	1	Retainer, back-fed main Retainer kit
18	9429 (950E)	4	Screw
19	50891-02 (950E)	4	Screw
20	50855-38 (950E)	1	Blanking plate—painted
21	50104-1 (950E) or 50104-2 (950E)	1	Filler—breaker panel Filler—breaker panel
22	53080-36 (950E)	1-3	Wire lead—(blank) (not shown)—black
23	5125924 (950E)	1	Wire lead—green (not shown)
24	5307936 (950E)	1	Wire lead—white (not shown)

5

Night/Chart Light

Figure 5-60. Night/Chart Light

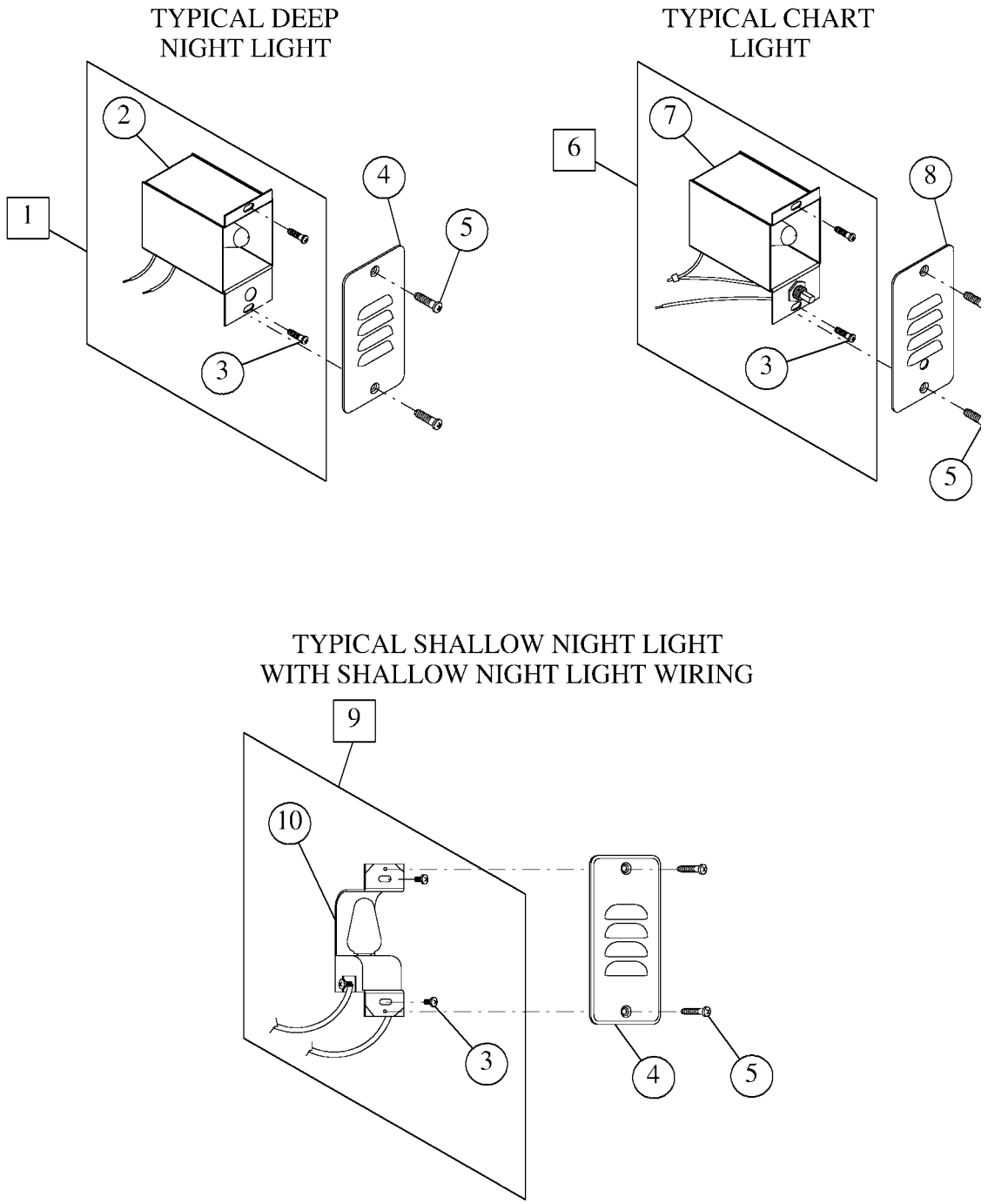

5

Table 5-61. Night/Chart Light

Item Number	Part Number	Quantity	Description
1	M001-0601 (950E)	1	Night light assembly with wires
2	55344 (950E)	1	Night light assembly
3	16115 (950E)	2	Screw
4	50682 (950E)	1	Faceplate
5	50590 (950E)	2	Screw
6	M001-0603 (950E)	1	Chart light assembly with wires
7	55345 (950E)	1	Chart light assembly
8	50686 (950E)	1	Faceplate
9	M001-0602 (950E)	1	Lampholder and bulb assembly with wires
10	28220 (950E)	1	Lampholder with bulb

Electrical Device Backbox

Figure 5-61. Electrical Device Backbox

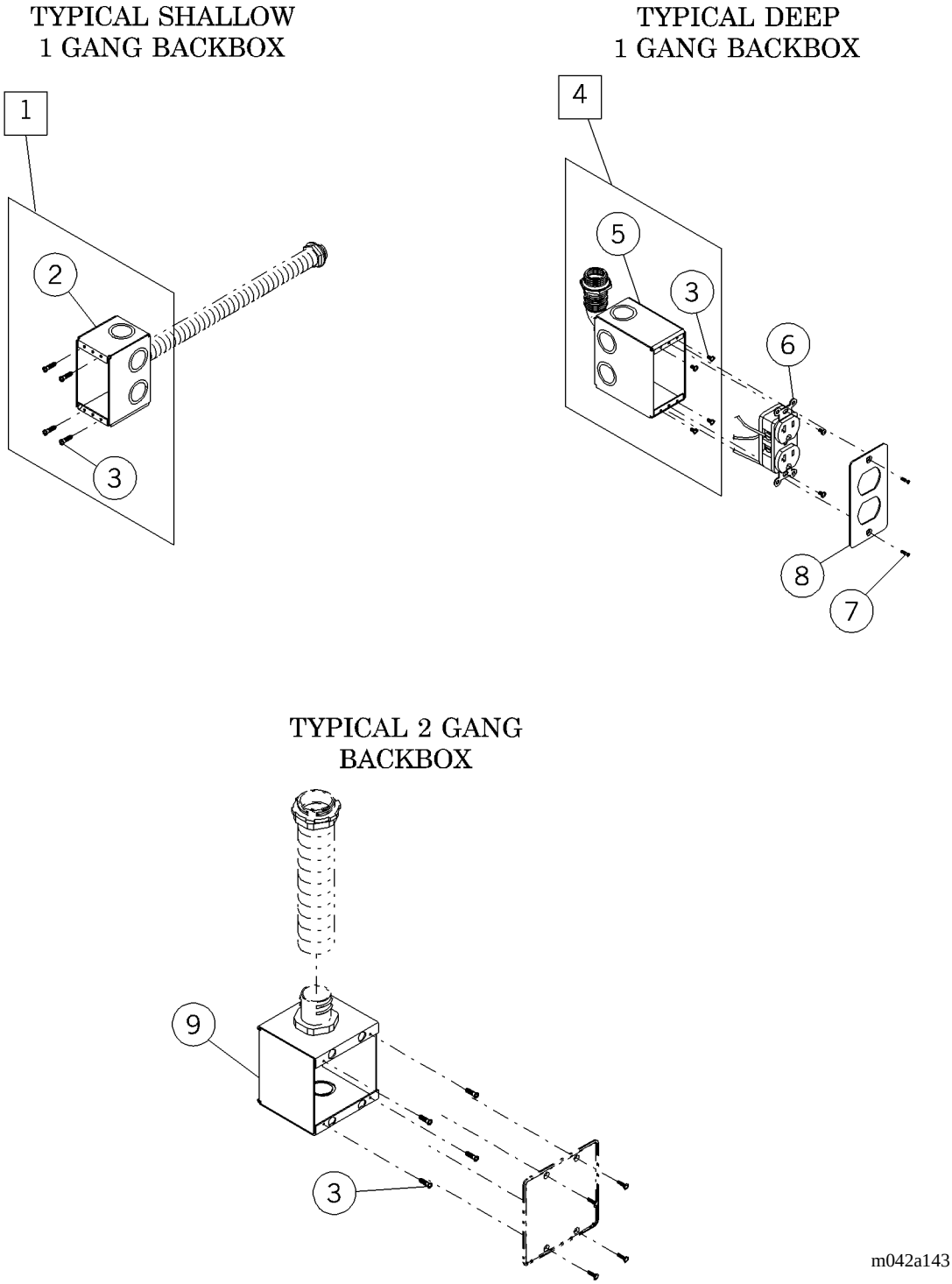

5

Table 5-62. Electrical Device Backbox

Item Number	Part Number	Quantity	Description
1	M001-2001 (950E)	1	Backbox assembly, electrical device shallow
2	33155 (950E)	1	Backbox, 1 gang shallow
3	16115 (950E)	4	Screw
4	M001-2002 (950E)	1	Backbox assembly, electrical devise deep
5	33154 (950E)	1	Backbox, 1 gang deep
6	51130 (950E) or 51129 (950E) or 28436 (950E) or 28439 (950E)	1	Receptacle, 15 amp duplex (red) Receptacle, 15 amp duplex (ivory) Receptacle, 20 amp duplex (red) Receptacle, 20 amp duplex (ivory)
7	50590 (950E)	2	Screw
8	50677 (950E)	1	Faceplate
9	56799 (950E)	1	Backbox, 2 gang

NOTES:

5

Chapter 6
General Procedures

Chapter Contents

Cleaning and Care . . . . . 6 - 3
- General Cleaning . . . . . 6 - 3
- Steam Cleaning . . . . . 6 - 3
- Hard to Clean Spots . . . . . 6 - 4
- Accessories . . . . . 6 - 4
- Disinfection . . . . . 6 - 4

Lubrication Requirements . . . . . 6 - 4

Preventive Maintenance . . . . . 6 - 4
- Preventive Maintenance Schedule . . . . . 6 - 6
- Preventive Maintenance Checklist . . . . . 6 - 7

Tool and Supply Requirements . . . . . 6 - 8

Installation and Post-Installation Inspection . . . . . 6 - 8

6

NOTES:

Cleaning and Care

WARNING:
Follow the product manufacturer's instructions. Failure to do so could result in personal injury or equipment damage.

SHOCK HAZARD:
To minimize the risk of electrical shock or damage to equipment, disconnect all electrical power to the system before working on it. Failure to do so could result in personal injury or equipment damage.

SHOCK HAZARD:
Do not expose the unit to excessive moisture. Personal injury or equipment damage could occur.

CAUTION:
Do not use harsh cleaners, solvents, or detergents. Equipment damage could occur.

General Cleaning

1. Perform the following:
   a. Locate the involved building standard/emergency circuit breaker panel.
   b. Set the involved circuit breaker (A) to OFF (see figure 4-13 on page 4-28).
   c. Lock out and tag out the breaker.
2. Remove applied power to the Power Column before cleaning or disinfecting.
3. Clean the Power Column with a lightly dampened cloth and ordinary disinfectants. Do not use excessive liquid.

Steam Cleaning

Do not use any steam cleaning device on the Power Column. Excessive moisture can damage mechanisms in this unit.

Hard to Clean Spots

To remove difficult spots or stains, use standard household cleaners and a soft bristle brush. To loosen heavy, dried-on soil or excreta, you may first need to saturate the spot.

Accessories

Remove soiled accessories from the Power Column accessory tracks prior to cleaning or disinfecting.

Disinfection

Dilute disinfectants and germicides as specified on the manufacturer's label.

Lubrication Requirements

WARNING:
Follow the product manufacturer's lubrication instructions. Failure to do so could result in personal injury or equipment damage.

Preventive Maintenance

WARNING:
Only facility-authorized maintenance personnel should perform preventive maintenance on the Power Column. Preventive maintenance performed by unauthorized personnel could result in personal injury or equipment damage.

The Power Column requires an effective maintenance program. We recommend that you perform annual preventive maintenance (PM) and testing for Joint Commission on Accreditation of Healthcare Organizations (JCAHO). PM and testing not only meet JCAHO requirements but will help ensure a long, operative life for the Power Column. PM will minimize downtime due to excessive wear.

The following PM schedule guides the technician through a normal PM procedure on the Power Column. During this PM process, check each item on the schedule, and make the necessary adjustments.

Follow the PM schedule with the corresponding PM checklist. This checklist is designed to keep a running maintenance history and subsequent repair costs for one Power Column. However, your facility can modify this checklist or design another to fit your needs. Keeping close records and maintaining the Power Column are two effective ways to reduce downtime and ensure the patient remains comfortable.

Preventive Maintenance Schedule

Table 6-1. Preventive Maintenance Schedule

Function	Procedure
Power cables, wiring, and conduit	Inspect all cables, wiring, and conduits for good condition and possible cracking, cuts, crimping, or pinches in insulated coverings.
Circuit breakers	Turn the circuit breaker off and on to check for proper function.
Electrical receptacles	Check all receptacles for proper ground conductor extractive force. The extractive force should be four ounces with a 0.184" (4.67 mm) diameter pin.
Switches	Check all switches for proper operation and switch action. Switches should be properly mounted, and the switch toggles or dimmer mechanisms should be secure.
Electrical connections	Check all electrical connections for tightness, and tighten as needed.
Gas supply conduit	Inspect all joints in the Power Column for gas leaks. Inspect the tubing for cracking, wear, collapse, or leakage.
Accessory tracks	Inspect all accessory tracks for damage. Accessory tracks should be securely mounted to the Power Column body.
General appearance	Check cleanliness. See “Cleaning and Care” on page 6-3 if needed.

6

Preventive Maintenance Checklist

Table 6-2. Preventive Maintenance Checklist

Date																						
																						Function
Hill-Rom Company, Inc.	Manufacturer																					Cables, wiring, conduit
																						Circuit breakers
																						Electrical receptacles
																						Switches
																						Electrical connections
																						Gas supply conduit
																						Accessory tracks
																						General appearance
	Model Number																					
	Serial Number																					
	Total Charge for This Page																					Labor Time:
																						Repair Cost:
																						Inspected By:
																						Legend C=Clean A=Adjust R=Repair or Replace O=Okay N=Not Applicable Remarks:

6

Tool and Supply Requirements

The following tools are required to service the Power Column:

- Screwdriver
- Phillips head screwdriver
- Pliers
- Adjustable wrench
- Socket wrench set
- Digital multimeter

Installation and Post-Installation Inspection

1. Complete installation instructions are supplied with every Power Column. These instructions reflect the variations in each system as ordered.

2. In seismic code areas, contact Hill-Rom for additional information concerning installation.

3. As per Power Column manufacturer's instructions, the installing contractor shall:

   a. Attach each Power Column to the ceiling by ceiling rings tied to the building structure.

   b. Install and anchor the base to the floor.

   c. Adjust the jack screws, and install the base cover.

4. As per Power Column manufacturer's instructions, the electrical contractor shall:

   a. Furnish and install conduit and wire to connect the Power Column to building services as shown on the shop drawing wiring diagram at the pre-wired main junction box.

   b. When the Power Column has an isolation power system, the electrical contractor shall install the isolation transformer per manufacturer's instructions.

   c. Use rigid conduit to connect the Power Column to the building services, wherever possible, due to flexible conduit code restrictions.

5. The mechanical contractor shall:
   a. Provide primary connectors to the pre-manifolded gas risers above the top of the Power Column.
   b. Perform and certify all pressure tests as required by NFPA-99.
6. The communications contractor shall:
   a. Make wiring pulls through the supplied conduit, hook-up and install the equipment in supplied backboxes.
   b. Perform all tests to check out the systems.
7. The installing contractor shall:
   a. Complete installation of the shrouds and accessory equipment per the manufacturer's instructions.
8. The installing contractor shall:
   a. Check out entire installation for proper operation after hook-up and installation of equipment is complete.
9. Installing contractor shall:
   a. Remove all fingerprints and smudges from all the exposed surfaces in accordance with general cleaning procedures.

NOTES:

Chapter 7
Accessories

Chapter Contents

Monitor Mount Conversion Kit . . . . . 7 - 4
Installation . . . . . 7 - 4
Pivoting Storage Basket, Shallow and Pivoting Waste Basket, Deep . . . . . 7 - 6
Installation . . . . . 7 - 6
Large and Small Storage Basket . . . . . 7 - 8
Installation . . . . . 7 - 8
Floor Mounted Bed Locator . . . . . 7 - 10
Installation . . . . . 7 - 10
Arm Light Mount . . . . . 7 - 11
Installation . . . . . 7 - 11
Multipoint Universal Holder . . . . . 7 - 12
Installation . . . . . 7 - 12
STAT Clock/Timer Pod Mounted . . . . . 7 - 13
Installation . . . . . 7 - 13
Adjustable Shelf . . . . . 7 - 15
Installation . . . . . 7 - 15
Exam Plus Light Mount Assembly . . . . . 7 - 17
Installation . . . . . 7 - 17
Bird Blender Mount . . . . . 7 - 18
Installation . . . . . 7 - 18
Track Mounted Utility Light . . . . . 7 - 20
Installation . . . . . 7 - 20
Aneroid or Mercurial Sphygmomanometer Bracket . . . . . 7 - 21

Installation . . . . . 7 - 21
Utility/Bottle Side Mount . . . . . 7 - 22
Installation . . . . . 7 - 22
Opthalmoscope Mount . . . . . 7 - 24
Installation . . . . . 7 - 24
Short Post or Long Post Utility Mount . . . . . 7 - 26
Installation . . . . . 7 - 26
Infusion Pump/IV Holder . . . . . 7 - 28
Installation . . . . . 7 - 28
Stabilet Freestanding Infant Warmer Swivel Shelf . . . . . 7 - 30
Installation . . . . . 7 - 30
Resuscitator Bag Holder . . . . . 7 - 32
Installation . . . . . 7 - 32

Accessories

See table 7-1 on page 7-3 for Power Column accessories.

Table 7-1. Accessories List

Product Number	Description
P651C991	Monitor Mount Conversion Kit
P951S03, P951W03	Pivoting Storage Basket, Shallow and Pivoting Waste Basket, Deep
P952L01, P952S01	Large and Small Storage Basket
P958-00	Floor Mounted Bed Locator
P936M00	Arm Light Mount
P970A01	Multipoint Universal Holder
P964-00	STAT Clock/Timer Pod Mounted
P961E02	Adjustable Shelf
P965M01	Exam Plus Light Mount Assembly
P973-B1	Bird Blender Mount
P966A00	Track Mounted Utility Light
P975-01, P974-01	Aneroid or Mercurial Sphygmomanometer Bracket
P973-01	Utility/Bottle Slide Mount
P973-S1	Opthalmoscope Mount
P972-01, P972L01	Short Post or Long Post Utility Mount
P984-00	Infusion Pump/IV Holder
P986S01	Stabilet Freestanding Infant Warmer Swivel Shelf
P102201	Resuscitator Bag Holder

7.1 Monitor Mount Conversion Kit

Tools required: Screwdriver

Installation

SHOCK HAZARD:
To minimize the risk of electrical shock or damage to equipment, disconnect all electrical power to the system before working on it. Failure to do so could result in personal injury or equipment damage.

1. Perform the following:
   a. Locate the involved building standard/emergency circuit breaker panel.
   b. Set the involved circuit breaker (A) to OFF (see figure 7-1 on page 7-4).
   c. Lock out and tag out the breaker.

Figure 7-1. Standard or Emergency Circuit Breaker Box

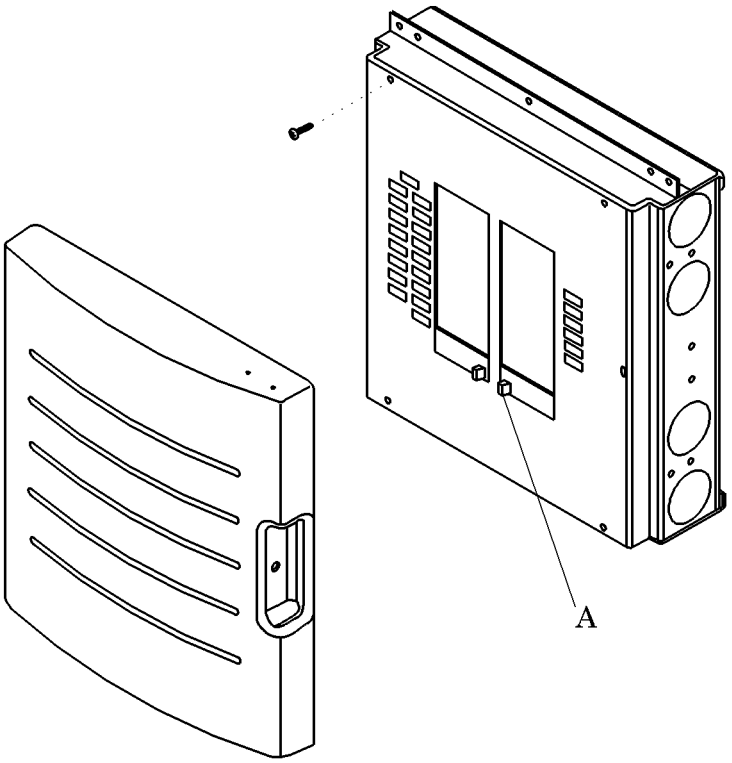

m042a097

2. Install the support assembly (A) on the power column (see figure 7-2 on page 7-5).

3. Install the screws (B), washers (C), monitor mounting channel (D) on to the monitor mounting channel backing plate assembly (E).

4. Install the laminate/steel monitor panel (G) and the corner tracks to the power column (see “Front and Rear Laminate/Steel Panels” on page 4-39).

5. Install the monitor mounting channel/backing plate assembly (D, E) and screws (F) to the monitor panel (G).

6. Remove the out-of-service tags, and turn the circuit breaker ON.

7. Check that power is applied to the power column.

Figure 7-2. Monitor Mount Conversion Kit

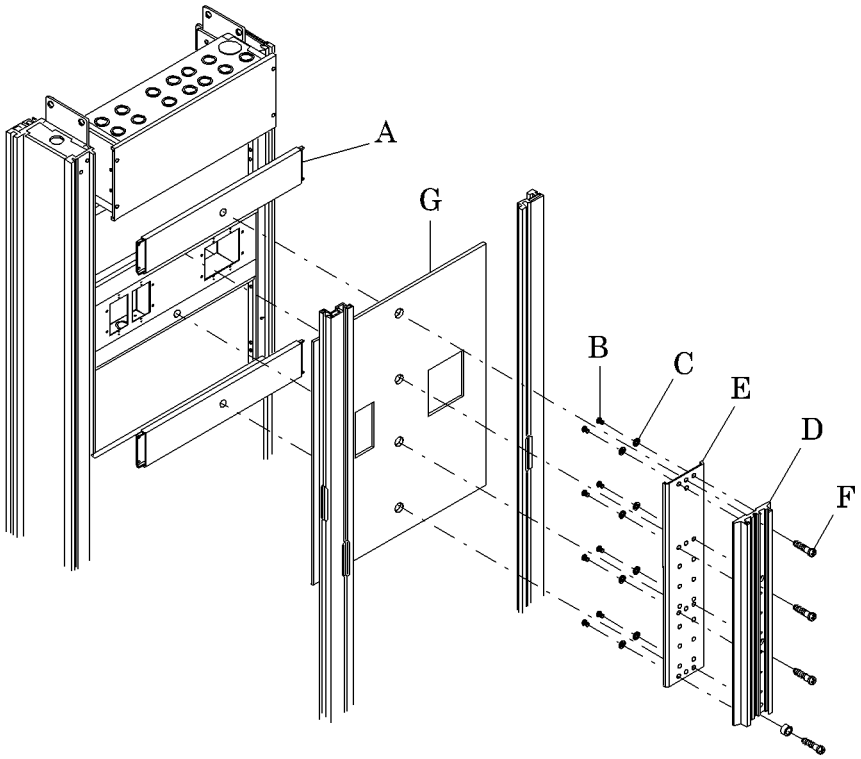

m042a123

7.2 Pivoting Storage Basket, Shallow and Pivoting Waste Basket, Deep

Tools required: Screwdriver

Installation

1. Install the slide assembly (A) into the power column corner track (see figure 7-3 on page 7-7).

2. Install the screws (B), hinge hooks (C), and the locking plate hinges (D) to the pivoting storage basket or pivoting waste basket (G).

3. Install the washers (E), screws (F), and pivoting storage basket or pivoting waste basket (G) to the slide assembly (A).

4. Install the liner (H) into the pivoting storage basket or pivoting waste basket (G).

Figure 7-3. Pivoting Storage Basket and Pivoting Waste Basket

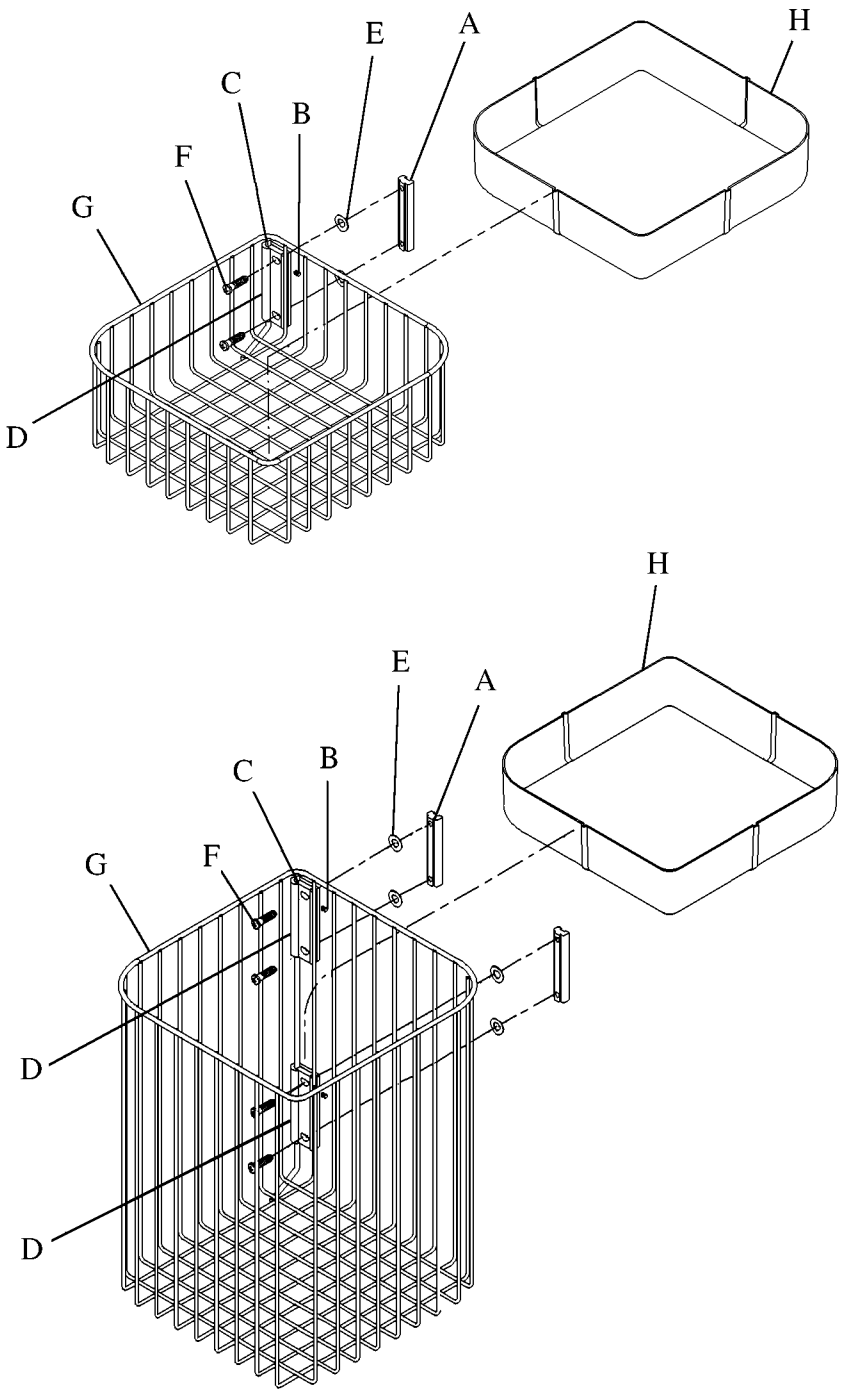

m042a124

7.3 Large and Small Storage Basket

Tools required: Screwdriver

Installation

NOTE:
Steps 1 through 3 apply to the small storage basket. Steps 4 through 8 apply to the large storage basket.

1. Install the slide assemblies (A) and screws (B) on the small storage basket (C) (see figure 7-4 on page 7-9).
2. Install the slide assemblies (A) in the corner tracks.
3. Tighten the screws (B).
4. Install the screws (D) and bottle guard brackets (E) to the bottle guard support (I). Tighten the screws (D).
5. Install the bumper blank (F) on the bottle guard support (I).
6. Install the washers (G), screws (H), and bottle guard support (I) to the slide assemblies (A). Tighten the screws (H).
7. Install the slide assemblies (A) to the corner tracks.
8. Tighten the screws (H).
9. Insert the large storage basket (J) in the bottle guard support (I).

Figure 7-4. Large and Small Storage Basket

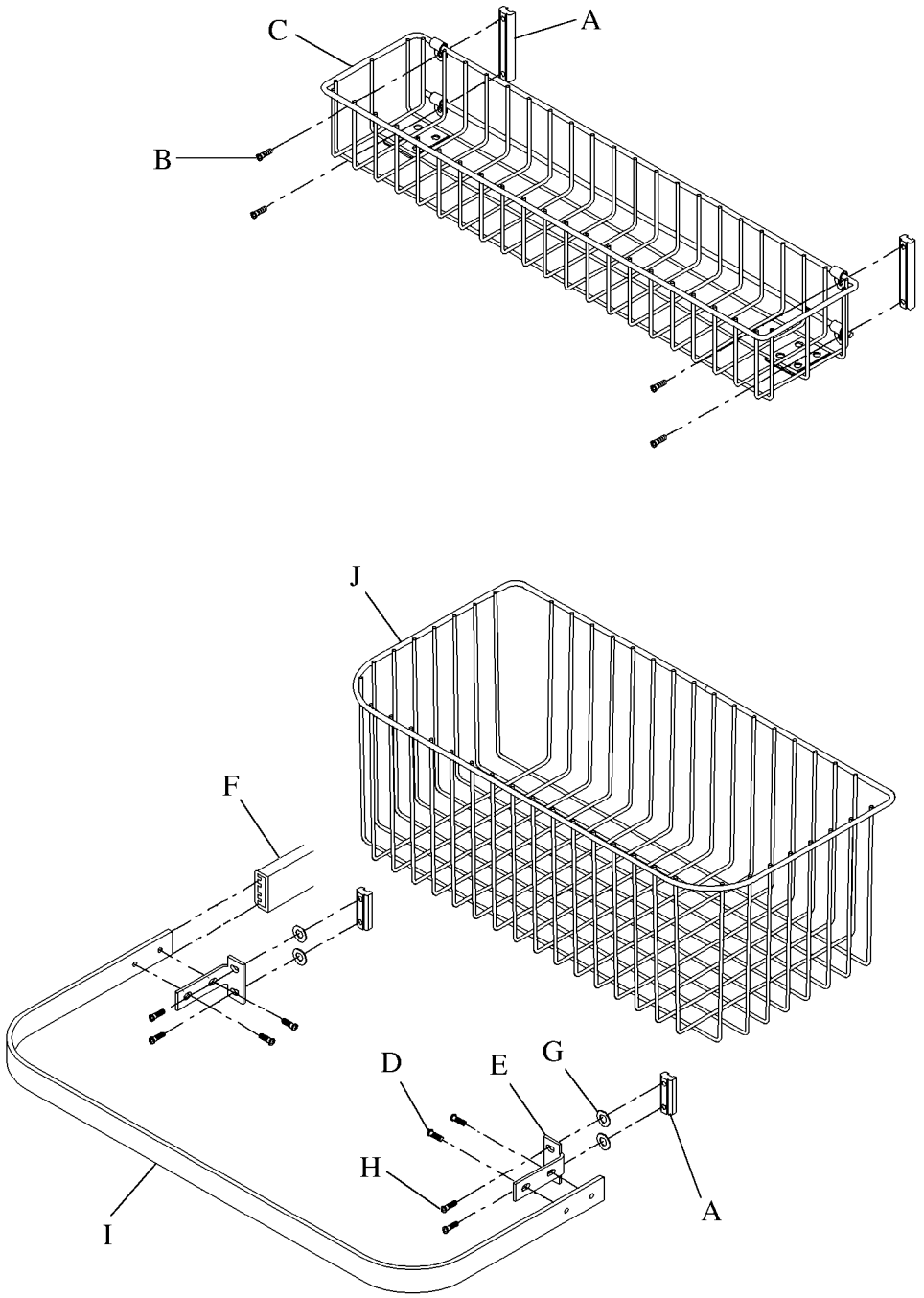

m042a125

7.4 Floor Mounted Bed Locator

Tools required: Drill
Hammer
Phillips head screwdriver

Installation

1. Install the expansion shields (A) into the drilled floor holes (see figure 7-5 on page 7-10).

Figure 7-5. Floor Mounted Bed Locator

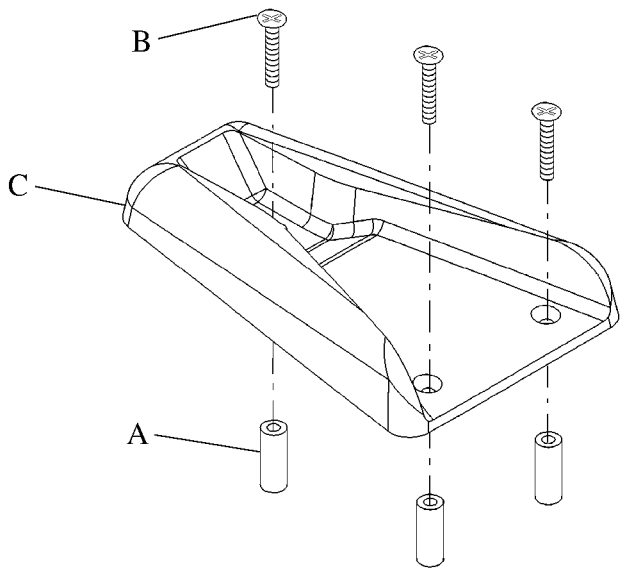

m042a126

2. Install the screws (B) and floor bed locator (C) onto the floor.

7.5 Arm Light Mount

Tools required: Phillips head screwdriver

Installation

1. Install the screws (B) and arm light mounting bracket (C) into the rivnuts (A) (see figure 7-6 on page 7-11).

Figure 7-6. Arm Light Mount

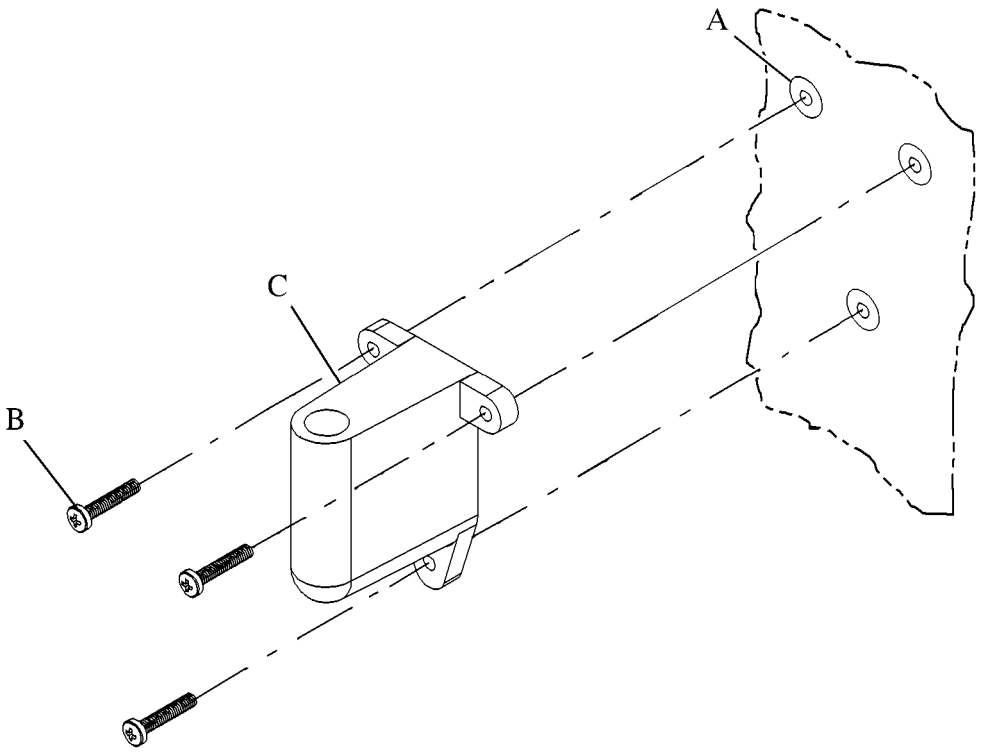

m042a127

2. Tighten the screws (B).

7.6 Multipoint Universal Holder

Tools required: Adjustable wrench

Installation

1. Install the multipoint mount lock (A) in the corner track (see figure 7-7 on page 7-12).

Figure 7-7. Multipoint Universal Holder

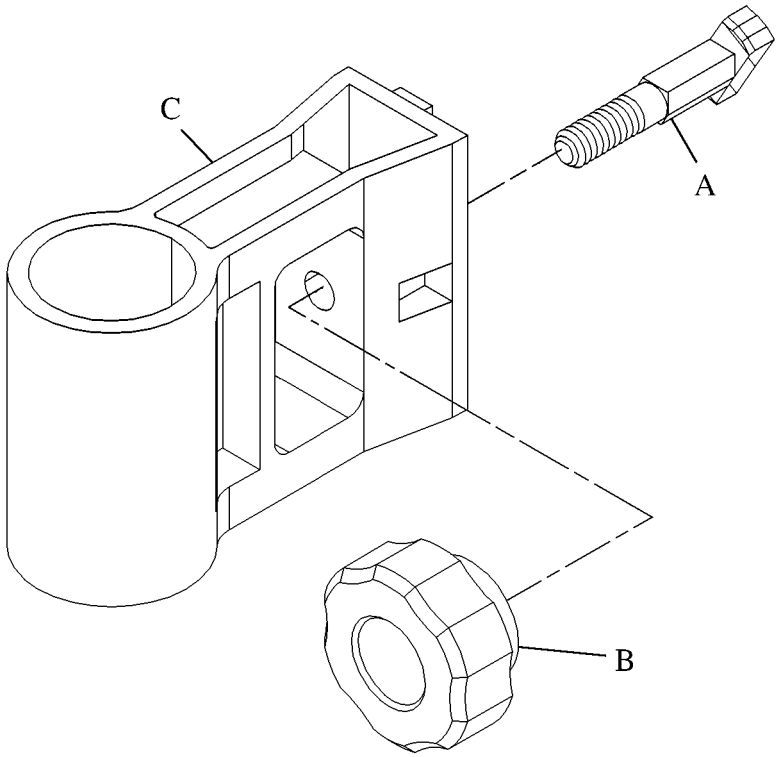

2. Install the knob (B) and holder-body (C) on the multipoint mount lock (A).
3. Tighten the knob (B).

7.7 STAT Clock/Timer Pod Mounted

Tools required: Screwdriver
Rivet gun
Adjustable wrench

Installation

1. Install the cover (A) on the bail (B) (see figure 7-8 on page 7-14).
2. Install the screws (C), nylon washers (D), nuts (E), and pivot frame (F) on the bail (B).
3. Install the rivets (G).
4. Install the speed nuts (H), screws (I), and STAT clock/timer (J) in the pivot frame (F).
5. Install the shoulder bolt (K), nylon washer (L), shakeproof nut (M), and bail (B) to the arm (N).
6. Install the cable clamp (O) and screw (P) to the arm (N).
7. Install the bolt (Q) through the arm (N).
8. Install the beveled nylon washers (R), O-rings (S), compression nut (T), washer (U), and screw (V) on the bolt (Q).
9. Install the STAT clock/timer pod mounted assembly on the multipoint universal holder.

Figure 7-8. STAT Clock /Timer Pod Mounted

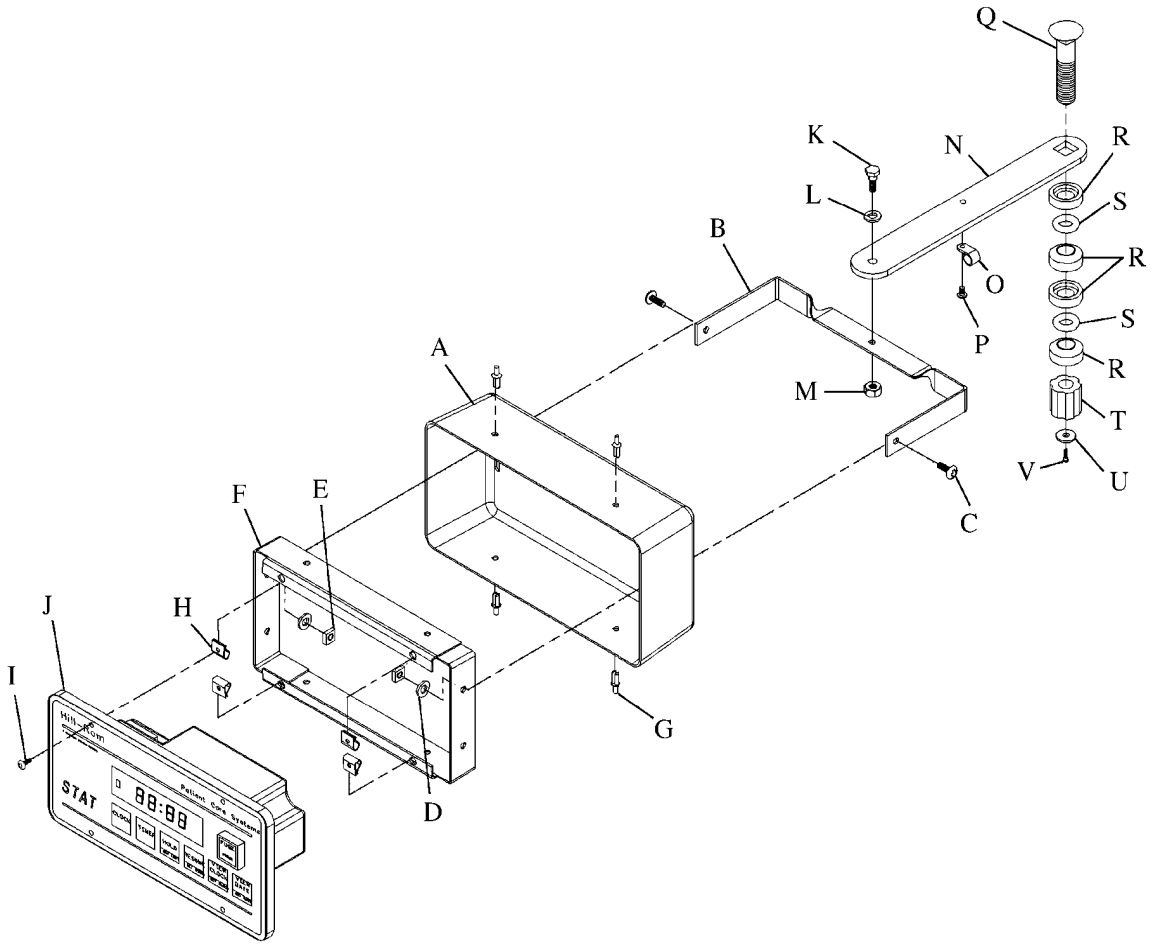

m042a129

7.8 Adjustable Shelf

Tools required: Screwdriver

Installation

1. Install the slide inserts (A), shim washers (B), screws (C), spacers (D), and knobs (E) on the shelf mounts (F) (see figure 7-9 on page 7-16).
2. Install the screws (G) and shelf mounts (F) on the shelf (H).
3. Install the slide inserts (A) into the corner tracks.
4. Tighten the knobs (E) to secure the adjustable shelf.

Figure 7-9. Adjustable Shelf

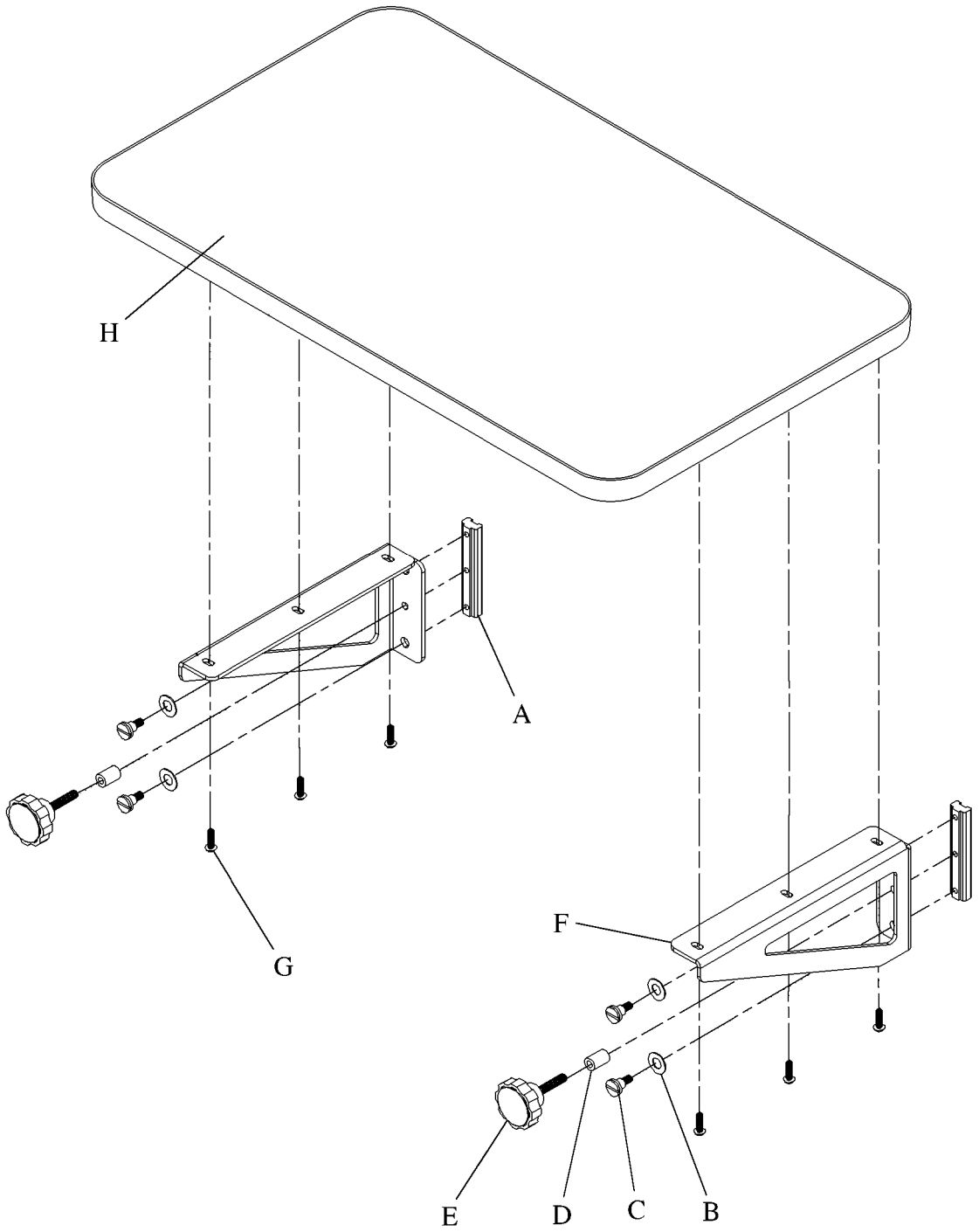

m042a130

7.9 Exam Plus Light Mount Assembly

Tools required: Phillips head screwdriver
Adjustable wrench

Installation

1. Install the slider inserts (A), screws (B), spacers (C), and knobs (D) on the exam plus mount base (E) (see figure 7-10 on page 7-17).

Figure 7-10. Exam Plus Light Mount Assembly

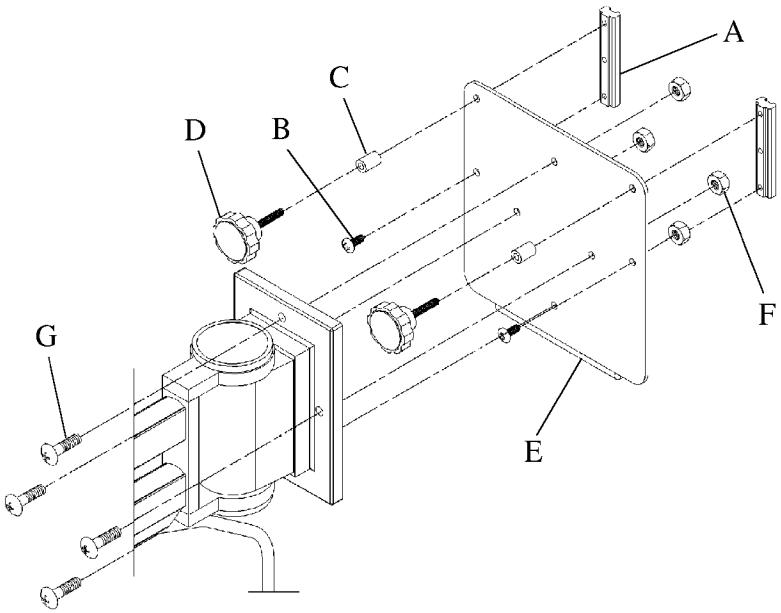

m042a131

2. Install the locknuts (F) and screws (G) securing the exam plus light to the exam plus mount base (E).

3. Install the slider inserts (A) on the corner tracks.

4. Tighten the knobs (D) to secure the exam plus light mount assembly.

7.10 Bird Blender Mount

Tools required: Phillips head screwdriver
Screwdriver

Installation

1. Install the short screws (A) and dovetail bracket (B) on the slide type bracket (C), (see figure 7-11 on page 7-19).
2. Install the bolt (D) on the slide type bracket (C).
3. Install the beveled nylon washers (E), O-rings (F), compression nut (G), washer (H), and screw (J) on the bolt (D).
4. Install the Bird Blender mount on the multipoint universal holder.

Figure 7-11. Bird Blender Mount

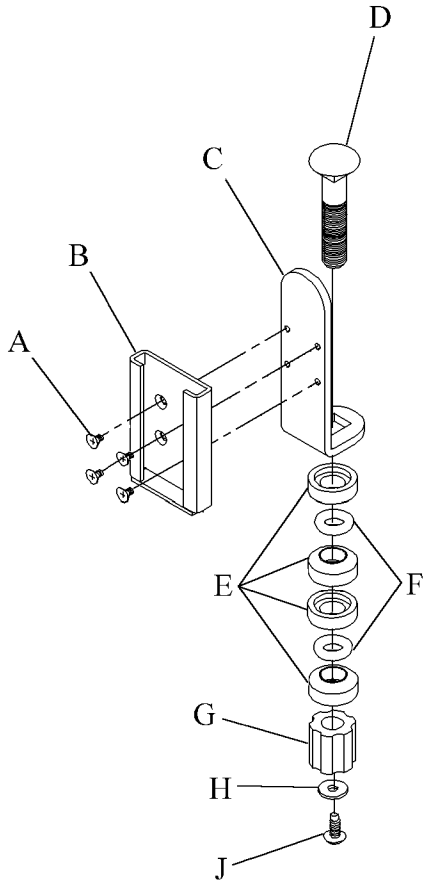

m042a132

7.11 Track Mounted Utility Light

Tools required: Phillips head screwdriver

Installation

1. Install the slider insert (A), shim washers (B) and screws (C) on the mounting bracket (D) (see figure 7-12 on page 7-20).

Figure 7-12. Track Mounted Utility Light

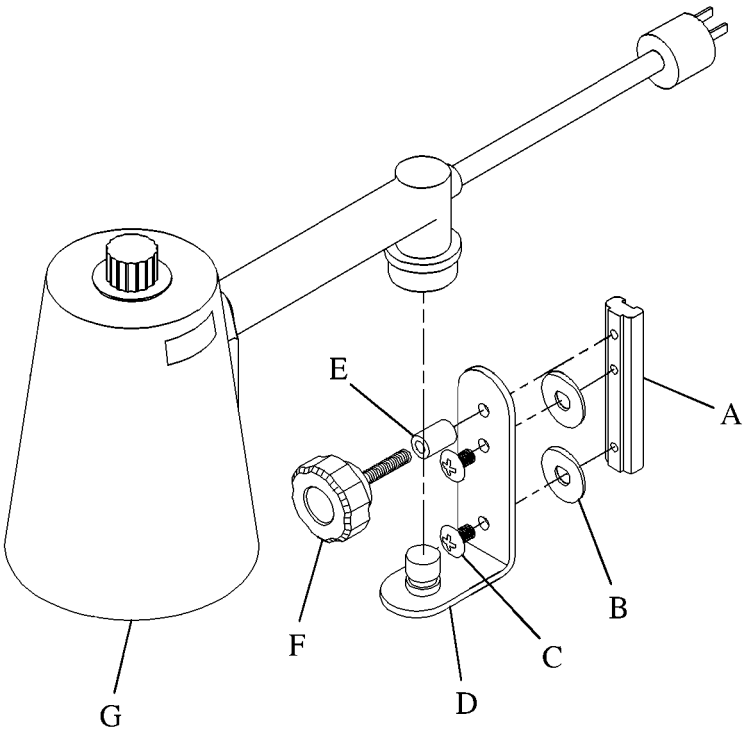

m042a133

2. Install the spacers (E) and knob (F) on the mounting bracket (D).
3. Install the slider insert (A) on the corner track.
4. Tighten the knob (F).
5. Install the track mounted utility light (G) on the mounting bracket (D).

7.12 Aneroid or Mercurial Sphygmomanometer Bracket

Tools required: Phillips head screwdriver

Installation

1. Install the bolt (A), beveled nylon washers (B), O-rings (C), compression nut (D), washer (E), and screw (F) on the sphygmomanometer support bracket (G) (see figure 7-13 on page 7-21).

Figure 7-13. Aneroid or Mercurial Sphygmomanometer Bracket

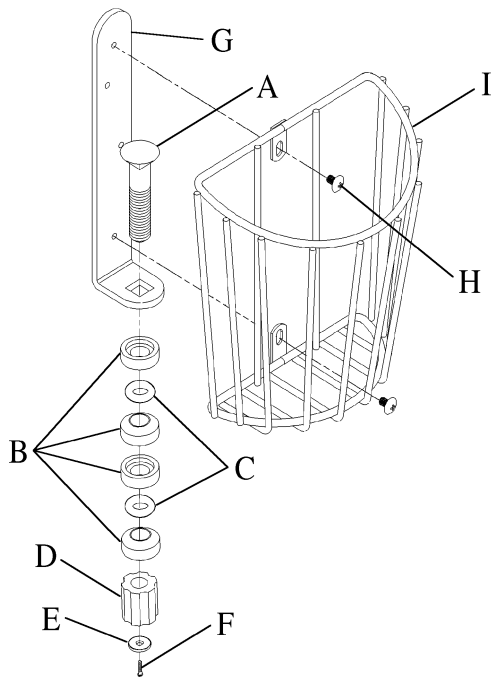

m042a134

2. Install the screws (H) and cuff basket (I) on the sphygmomanometer support bracket (G).

3. Install the sphygmomanometer support bracket (G) on the multipoint universal holder.

7.13 Utility/Bottle Side Mount

Tools required: Screwdriver

Installation

1. Install the bolt (A), beveled nylon washers (B), O-rings (C), compression nut (D), washer (E), and screw (F) on the bracket utility mount (J) (see figure 7-14 on page 7-23).

2. Install the screws (G), nylon spacer (H), and bracket (I) on the bracket utility mount (J).

3. Install the bracket utility mount (J) on the multipoint universal holder.

Figure 7-14. Utility/Bottle Side Mount

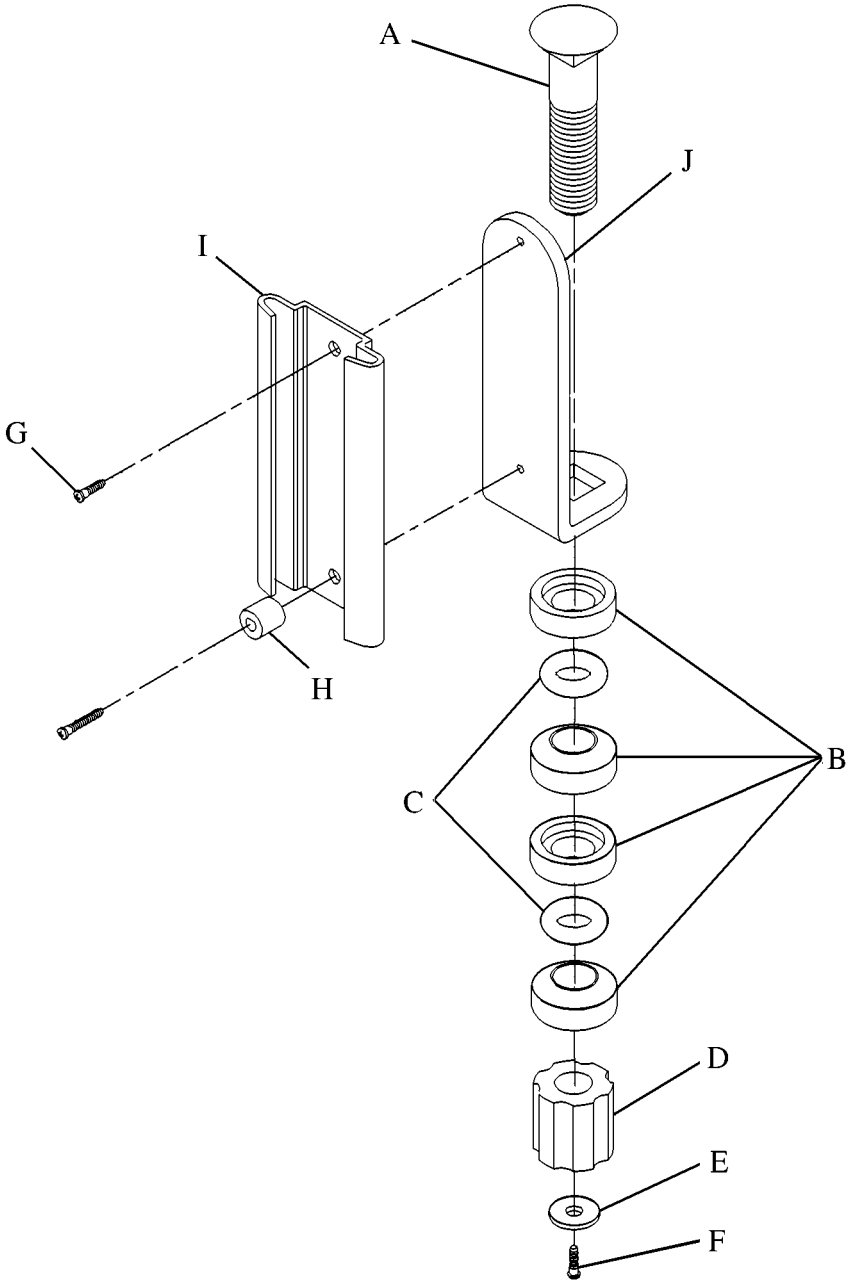

m042a135

7.14 Opthalmoscope Mount

Tools required: Screwdriver

Installation

1. Install the bolt (A), beveled nylon washers (B), O-rings (C), compression nut (D), washer (E), and screw (F) on the mounting bracket (G) (see figure 7-15 on page 7-25).

2. Install the screws (H) and bracket (I) on the mounting bracket (G).

3. Install the mounting bracket (G) on the multipoint universal holder.

Figure 7-15. Opthalmoscope Mount

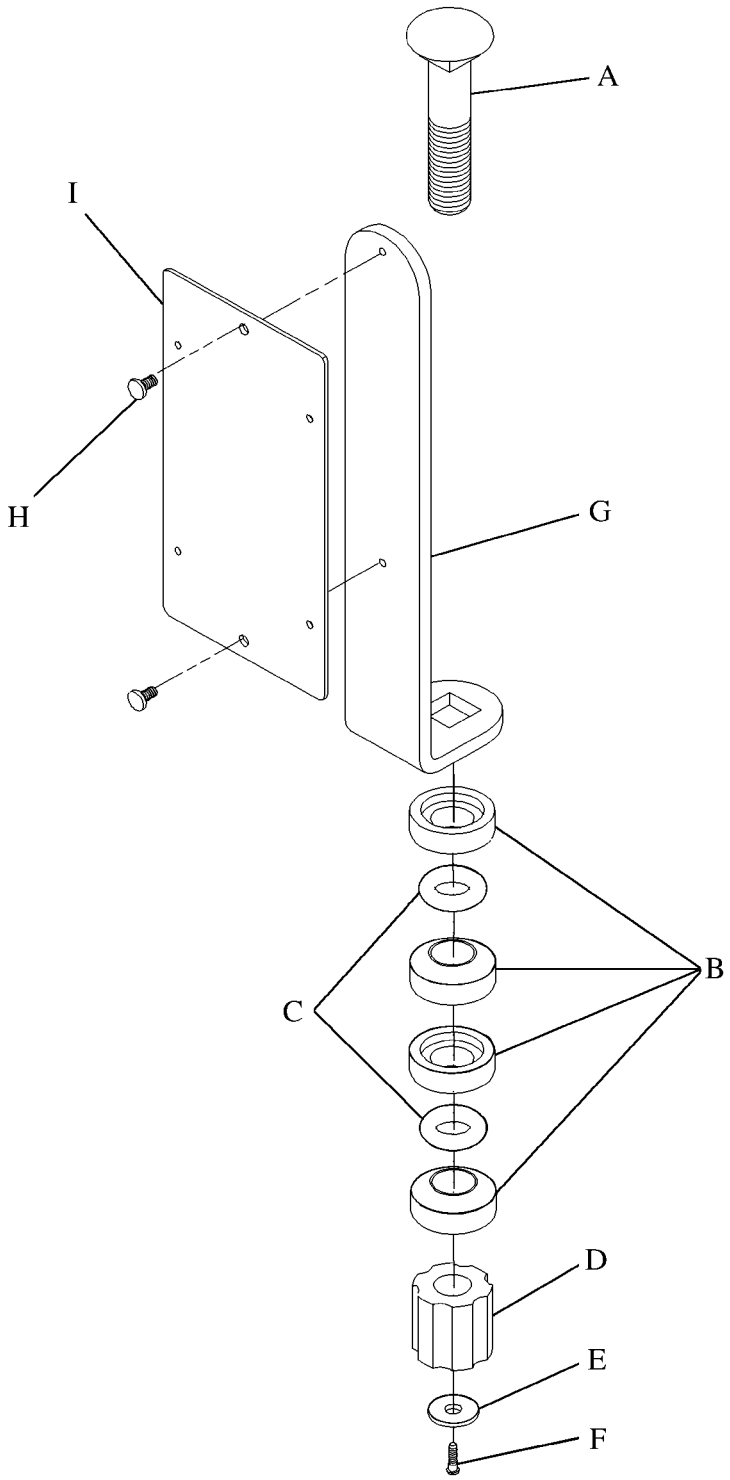

m042a136

7.15 Short Post or Long Post Utility Mount

Tools required: Screwdriver

Installation

1. Install the bolt (A), beveled nylon washers (B), O-rings (C), compression nut (D), washer (E), and screw (F) on the transducer plate (G) (see figure 7-16 on page 7-27).

2. Install the screw (H) and transducer holder or infusion pump holder (I) on the transducer plate (G).

3. Install the transducer plate (G) on the multipoint universal holder.

Figure 7-16. Short Post or Long Post Utility Mount

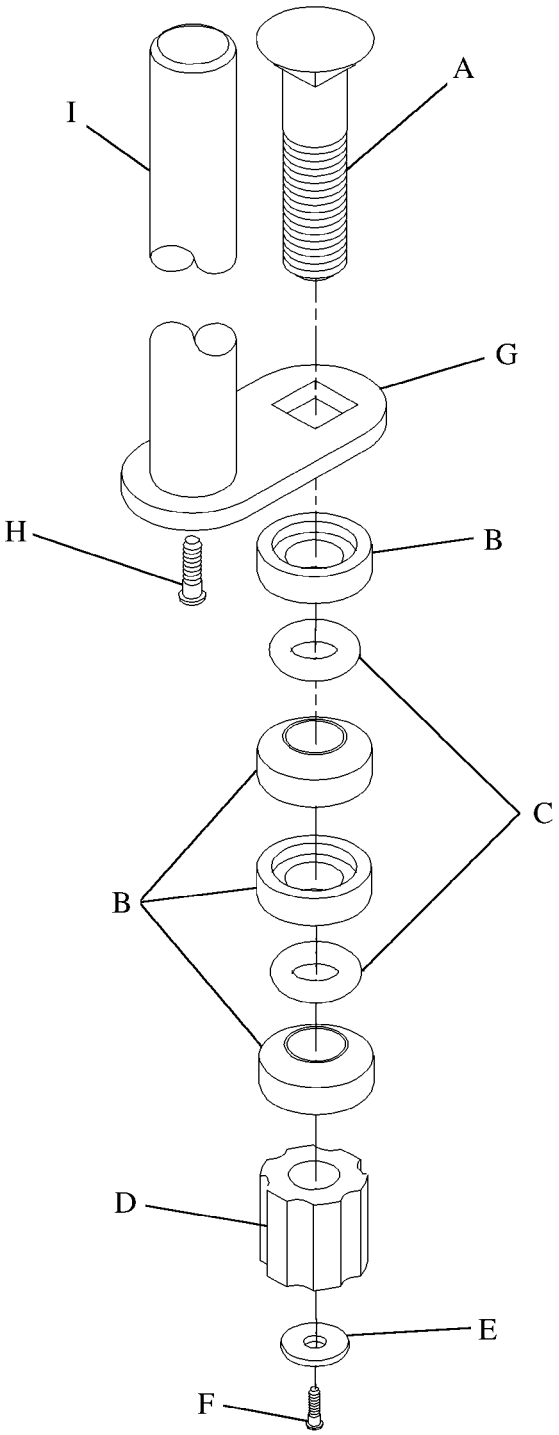

m042a137

7.16 Infusion Pump/IV Holder

Tools required: Screwdriver

Installation

1. Install the beveled nylon washers (B), O-rings (C), compression nuts (D), washers (E), and screws (F) on the support assemblies (A) (see figure 7-17 on page 7-29).

2. Install the IV pole clamps (G) and screws (H) on the support assemblies (A).

3. Install the IV pole clamps (G) and roll pin (I) on the hanger rod assembly (J).

4. Install the hub insert (K) and roll pin (L) on the hanger rod assembly (J).

5. Install the IV hooks (M) and roll pin (N) on the hub assembly (P).

6. Install the screw (O) and hub assembly (P) on the hanger rod assembly (J).

Figure 7-17. Infusion Pump/IV Holder

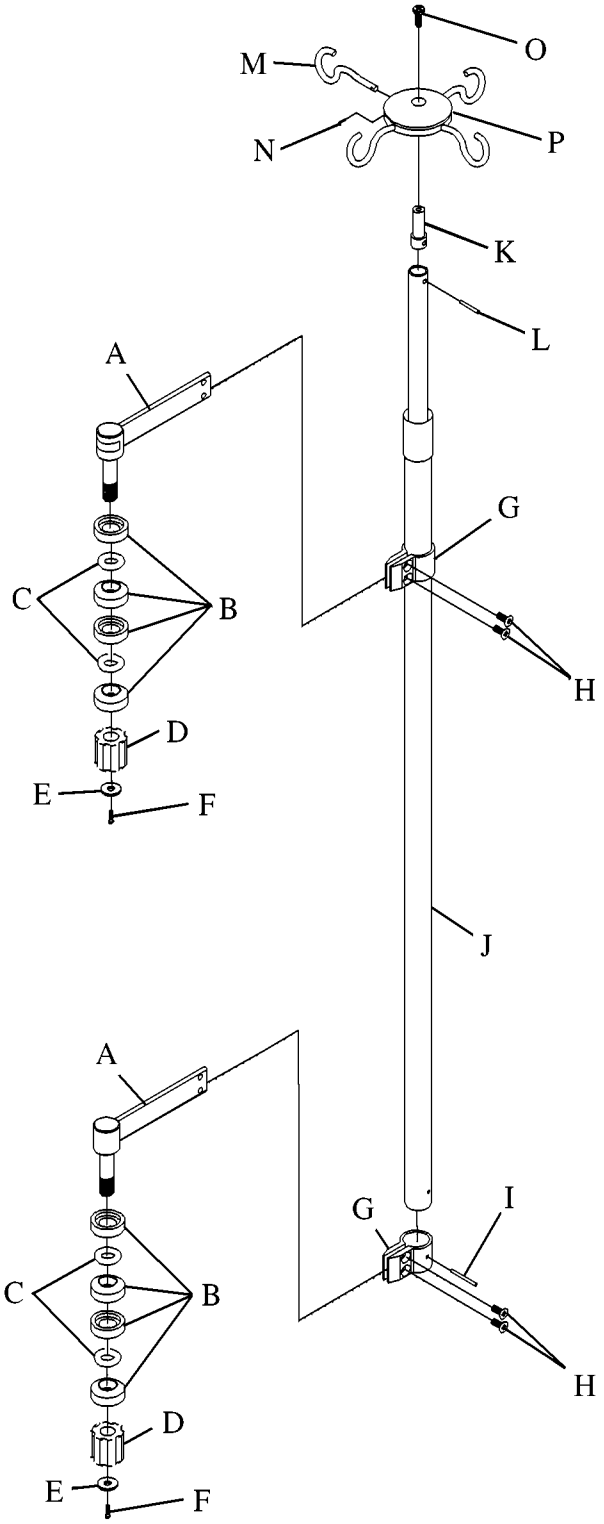

m042a138

7.17 Stabilet Freestanding Infant Warmer Swivel Shelf

Tools required: Screwdriver

Installation

1. Install the slide inserts (A), shim washers (B), and screws (C) on the tapped equipment holders (D) (see figure 7-18 on page 7-31).
2. Install the equipment holders (D) on the corner track.
3. Install the roll pin (E) on the support bar (I).
4. Install the nuts (F), screws (G), and shelf arm assembly (H) on the support bar (I).
5. Install the support bar (I) and knob assembly (J) on the equipment holder (D).
6. Tighten the screws (C).
7. Install the insert cap glide (K), bolts (L), screws (M), top swivel shelf (N), locknuts (O), swivel shelf (P), and cover (Q) on the shelf arm assembly (H).

Figure 7-18. Stabilet Freestanding Infant Warmer Swivel Shelf

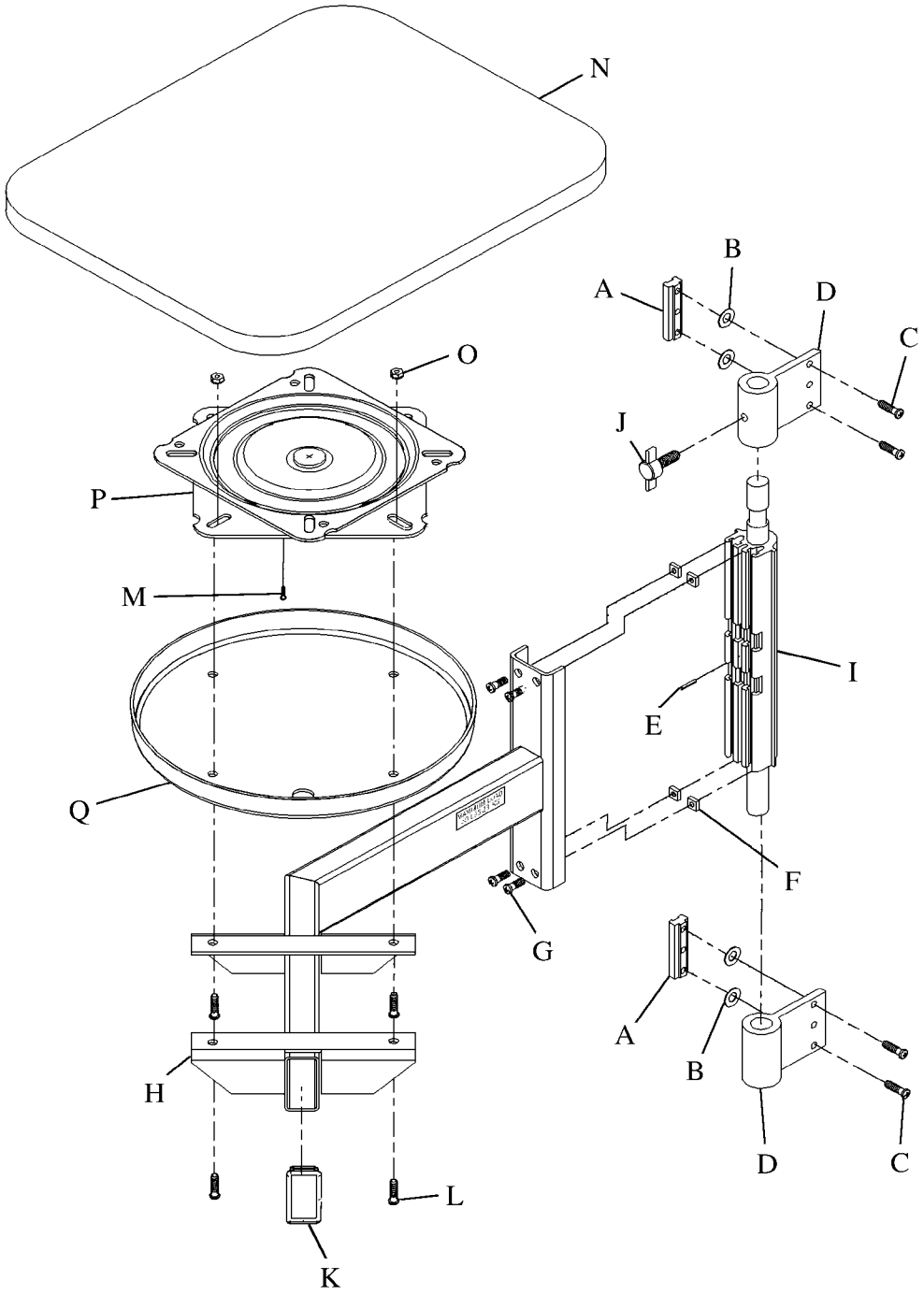

m042a139

7.18 Resuscitator Bag Holder

Tools required: Screwdriver

Installation

1. Install the bolt (A), beveled nylon washers (B), O-rings (C), compression nuts (D), washers (E), and screws (F) on the support bracket (G) (see figure 7-19 on page 7-33).

2. Install the screws (H) and manual resuscitator holder (I) on the support bracket (G).

3. Install the resuscitator bag holder on the multipoint universal holder.

Figure 7-19. Resuscitator Bag Holder

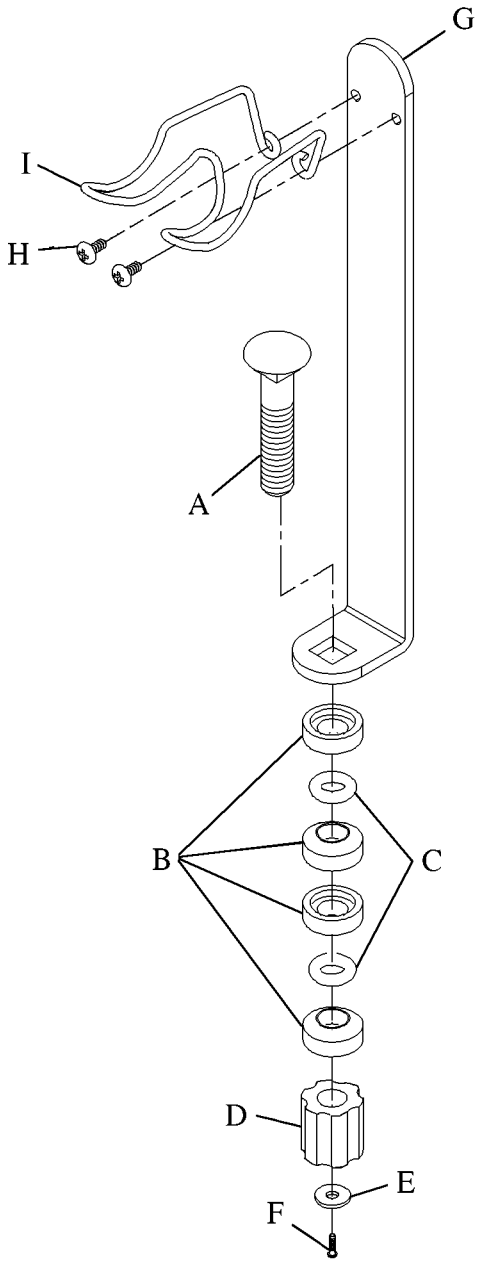

m042a140

NOTES: