GE Medical Systems

Technical Publications

2218867–100

Revision 2

ADVANTX LCA/LCV+

Positioner Schematics sch

do not duplicate

Copyright© 1998, 1999 by General Electric Co.

ATTENTION

LES APPAREILS À RAYONS X SONT DANGEREUX À LA FOIS POUR LE PATIENT ET POUR LE MANIPULATEUR SI LES MESURES DE PROTECTION NE SONT PAS STRICTEMENT APPLIQUEES

Bien que cet appareil soit construit selon les normes de sécurité les plus sévères, la source de rayonnement X représente un danger lorsque le manipulateur est non qualifié ou non averti. Une exposition excessive au rayonnement X entraîne des dommages à l'organisme.

Par conséquent, toutes les précautions doivent être prises pour éviter que les personnes non autorisées ou non qualifiées utilisent cet appareil créant ainsi un danger pour les autres et pour elles–mêmes.

Avant chaque manipulation, les personnes qualifiées et autorisées à se servir de cet appareil doivent se renseigner sur les mesures de protection établies par la Commission Internationale de la Protection Radiologique, Annales 26 : Recommandations de la Commission Internationale sur la Protection Radiologique et les normes nationales en vigueur.

WARNING

X–RAY EQUIPMENT IS DANGEROUS TO BOTH PATIENT AND OPERATOR UNLESS MEASURES OF PROTECTION ARE STRICTLY OBSERVED

Though this equipment is built to the highest standards of electrical and mechanical safety, the useful x–ray beam becomes a source of danger in the hands of the unauthorized or unqualified operator. Excessive exposure to x–radiation causes damage to human tissue.

Therefore, adequate precautions must be taken to prevent unauthorized or unqualified persons from operating this equipment or exposing themselves or others to its radiation.

Before operation, persons qualified and authorized to operate this equipment should be familiar with the Recommendations of the International Commission on Radiological Protection, contained in Annals Number 26 of the ICRP, and with applicable national standards.

ATENCION

LOS APARATOS DE RAYOS X SON PELIGROSOS PARA EL PACIENTE Y EL MANIPULADOR CUANDO LAS NORMAS DE PROTECCION NO ESTAN OBSERVADAS

Aunque este aparato está construido según las normas de seguridad más estrictas, la radiación X constituye un peligro al ser manipulado por personas no autorizadas o incompetentes. Una exposición excesiva a la radiación X puede causar daños al organismo.

Por consiguiente, se deberán tomar todas las precauciones necesarias para evitar que las personas incompetentes o no autorizadas utilicen este aparato, lo que sería un peligro para los demás y para sí mismas.

Antes de efectuar las manipulaciones, las personas habilitadas y competentes en el uso de este aparato, deberán informarse sobre las normas de protección fijadas por la Comisión Internacional de la Protección Radiológica, Anales No 26: Recomendaciónes de la Comisión Internacional sobre la Protección Radiológica y normas nacionales.

ACHTUNG

RÖNTGENAPPARATE SIND EINE GEFAHR FÜR PATIENTEN SOWIE BEDIENUNGSPERSONAL, WENN DIE GELTENDEN SICHERHEITSVORKEHRUNGEN NICHT GENAU BEACHTET WERDEN

Dieser Apparat entspricht in seiner Bauweise strengsten elektrischen und mechanischen Sichereitsnormen, doch in den Händen unbefugter oder unqualifizierter Personen wird er zu einer Gefahrenquelle. Übermäßige Röntgenbestrahlung ist für den menschlichen Organismus schädlich.

Deswegen sind hinreichende Vorsichtsmaßnahmen erforderlich, um zu verhindern, daßunbefugte oder unqualifizierte Personen solche Geräte bedienen oder sich selbst und andere Personen deren Bestrahlung aussetzen können.

Vor Inbetriebnahme dieses Apparats sollte sich das qualifizierte und befugte Bedienungspersonal mit den geltenden Kriterien für den gefahrlosen Strahleneinsatz durch sorgfältiges Studium des Hefts Nr. 26 der Internationalen Kommission für Strahlenschutz (ICRP) vertraut machen: Empfehlungen der Internationalen Kommission für Strahlenschutz und anderer nationaler Normenbehörden.

WARNING

VOLTAGE PRESENT

Before any intervention:

1. Switch **OFF** CB2 on the AC Power Distribution (VPE1 A2 A25) in Positioner Cabinet.

2. Switch **OFF** Positioner Cabinet Circuit Breaker in Generator Power Cabinet.

LOCK OUT/ TAG OUT

When necessary, perform the following lock out/ tag out procedure:

1. Cut the customer power distribution cabinet from its energy source.
2. Inform all concerned parties of the lockout.
3. Lock and put a lockout label on the cabinet.
4. Verify the absence of voltage in the cabinet.
5. Proceed with service to the equipment.
6. Unlock the cabinet and remove the label from the cabinet.
7. Power–up the system.

Blank page.

REVISION HISTORY

REV	DATE	REASON FOR CHANGE
0	September 1998	First release
1	October 1998	Update
2	April 1999	NF2 update: updated 2211392ADW and 2211392SCH

LIST OF EFFECTIVE PAGES

PAGE NUMBER	REVISION NUMBER	PAGE NUMBER	REVISION NUMBER	PAGE NUMBER	REVISION NUMBER
Title page	2				
Safety Instruction	2				
i thru vi	2				
1–1 thru 1–14	2				
2–1 thru 2–14	2				

Blank page.

SECTION 1
BOARDS LOCALIZATION

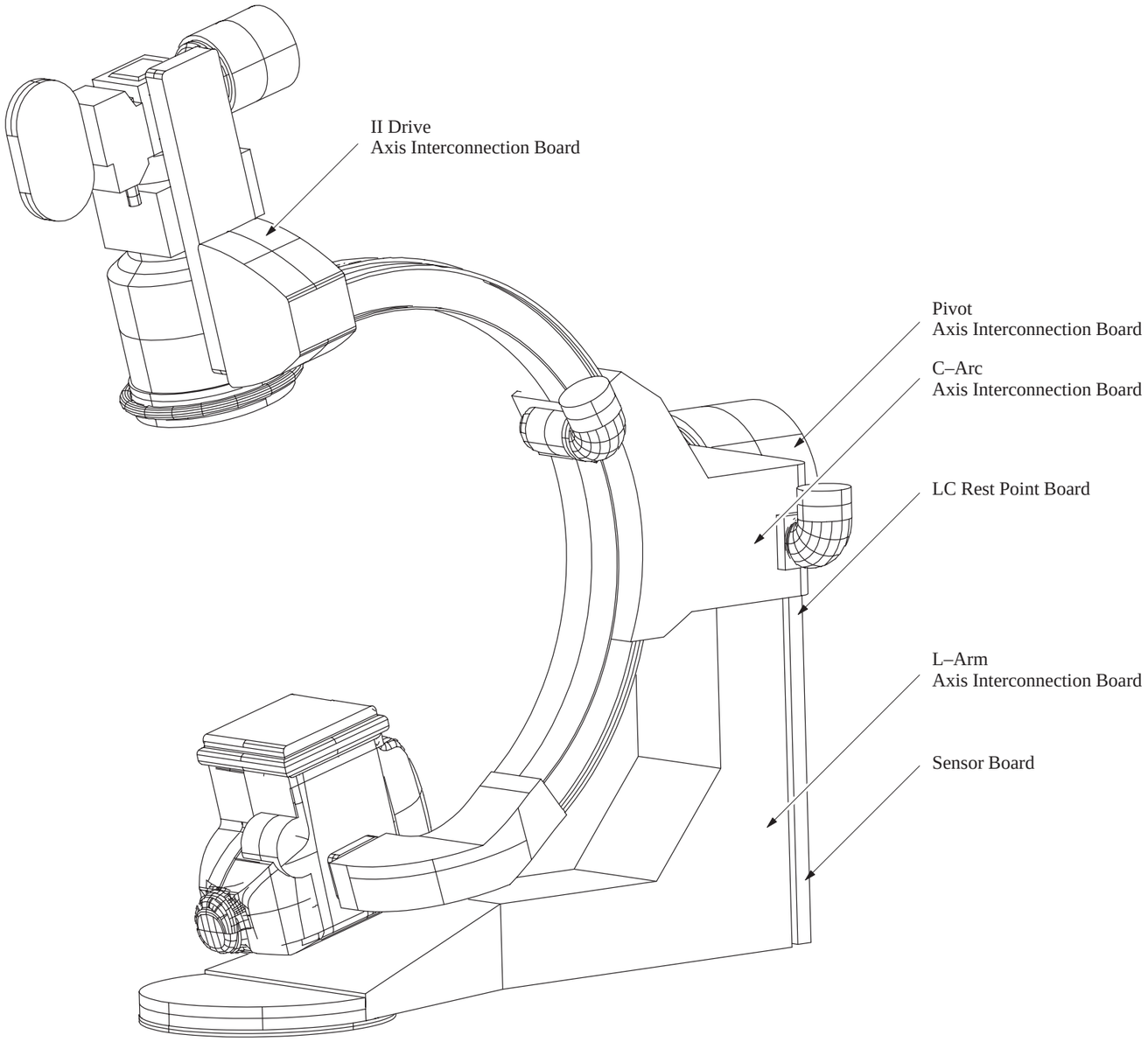

Blank page

SECTION 2
LIST OF THE SCHEMATICS

1. INTERCONNECTION

TITLE	DRAWING NUMBER	PAGE NUMBER
Interconnection Block Diagram	–	1–3
External Connectors Description (1/3 to 3/3)	–	1–4 TO 1–6
Power Rest Box Harness	2212632 ADW	1–7
Positioner Interconnection (1/6 to 6/6)	2221705 SCH	1–8 TO 1–13

2. ELECTRONIC BOARDS

TITLE	DRAWING NUMBER	PAGE NUMBER
LC Rest Point Board Component Layout	2211392 ADW	2–2
LC Rest Point Board Circuit Diagram (1/3 to 3/3)	2211392 SCH	2–3 TO 2–5
Axis Interconnection Board Component Layout	2130920 ADW	2–6
Axis Interconnection Board Circuit Diagram	2130920 SCH	2–7 TO 2–9
Collision Sensor Block Diagram	–	2–10
Collision Sensor Board Component Layout	2102376 ADW	2–11
Collision Sensor Board Circuit Diagram	2102376 SCH	2–12 TO 2–14

Blank page

1. INTERCONNECTION

TITLE	DRAWING NUMBER	PAGE NUMBER
Interconnection Block Diagram	–	1–3
External Connectors Description (1/3 to 3/3)	–	1–4 TO 1–6
Power Rest Box Harness	2212632 ADW	1–7
Positioner Interconnection (1/6 to 6/6)	2221705 SCH	1–8 TO 1–13

Blank page.

POSITIONER INTERCONNECTION BLOCK DIAGRAM

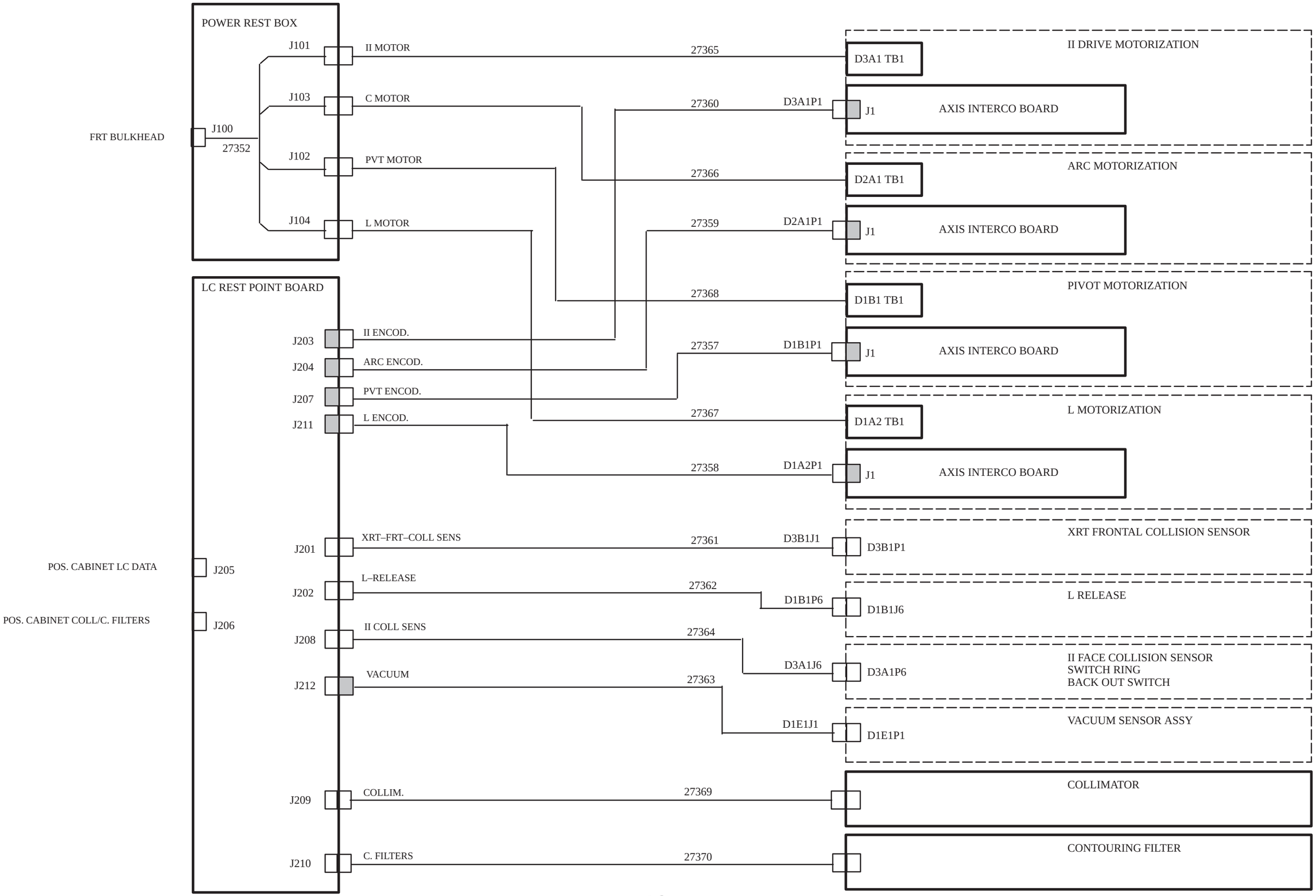

EXTERNAL CONNECTORS DESCRIPTION (1/3)

J100 – FRONTAL BULKHEAD (FROM POS CABLE: POWER MOTORS LCA)

N	SIGNAL	POWER REST BOX OUTPUTS	DESTINATION
1	BRK + L	J104–7	D1A2TB1–4
2	MOT – ARC	J103–3	D2A1TB1–2
3	MOT + ARC	J103–4	D2A1TB1–1
4	BRK1 + PVT	J102–5	B1
5	MOT – L	J104–3	D1A2TB1–2
6	MOT – L	J104–6	D1A2TB1–2
7	MOT – ARC	J103–6	D2A1TB1–2
8	MOT + ARC	J103–1	D2A1TB1–1
9	MOT – II	J101–3	D3A1TB1–2
10	BRK2 – PVT	J102–8	D1B1TB1–5
11	MOT + L	J104–4	D1A2TB1–1
12	BRK1 – PVT	J102–9	B1
13	BRK + ARC	J103–7	D2A1TB1–4
14	MOT – II	J101–6	D3A1TB1–2
15	BRK2 + PVT	J102 – 7	D1B1TB1–4
16	MOT + L	J104–1	D1A2TB1–1
17	MOT + PVT	J102–1	D1B1TB1–1
18	MOT – PVT	J102–3	D1B1TB1–2
19	MOT + II	J101–1	D3A1TB1–1
20	MOT + II	J101–4	D3A1TB1–1
21	BRK – L	J104–9	D1A2TB1–5
22	MOT + PVT	J102–4	D1B1TB1–1
23	MOT – PVT	J102–6	D1B1TB1–2
24	BRK – ARC	J103–9	D2A1TB1–5

J205 – POS. CABINET LC DATA (FROM POS CABLE: DATA LCA)

N	SIGNAL	REST POINT BOARD OUTPUTS	DESTINATION	AXIS INTERCO BD II/ARC/PVT/L
1	CHASSIS GND	J211–15	D1A2P1–15	15 (L)
2	PGENCA	J211–11	D1A2P1–11	11 (L)
3	CHASSIS GND	J207–15	D1B1P1–15	15 (PVT)
4	PGENCB	J207–11	D1B1P1–11	11 (PVT)
5	CHASSIS GND	J203–15	D3A1P1–15	15 (II)
6	PGENCD	J203–11	D3A1P1–11	11 (II)
7	CHASSIS GND	J204–4	D2A1P1–4	4 (ARC)
8	PGENCC	J204–11	D2A1P1–11	11 (ARC)
9	A_PHAp	J211–14	D1A2P1–14	14 (L)
10	A_PHAn	J211–13	D1A2P1–13	13 (L)
11	A_PHBp	J211–9	D1A2P1–9	9 (L)
12	A_PHBn	J211–10	D1A2P1–10	10 (L)
13	C_PHAp	J204–14	D2A1P1–14	14 (ARC)
14	C_PHAn	J204–13	D2A1P1–13	13 (ARC)
15	C_PHBp	J204–9	D2A1P1–9	9 (ARC)
16	C_PHBn	J204–10	D2A1P1–10	10 (ARC)
17	C_POTn	J204–2	D2A1P1–2	2 (ARC)
18	C_POTp	J204–1	D2A1P1–1	1 (ARC)
19	C_REF	J204–3	D2A1P1–3	3 (ARC)
20	C_GND	J204–15	D2A1P1–15	15 (ARC)
21				
22				
23				
24				
25				
26				
27	PUCK INTER 1	J212–9	D1E1J1–9	
28	EMERGENCY STOP N	J212–3	D1E1J1–7	
29	FIB 21p	J212–1	D1E1J1–6	
30	FIB 21n	J212–7	D1E1J1–4	
31	FIB 11p	J208–1	D3A1J6–10	
32	FIB 11n	J208–9	D3A1J6–9	
33	P24R	J212–5	D1E1J1–1	
34	P24R		D1E1J1–1	
35	P24R		D1E1J1–1	
36	SW LVI II	J208–10	D3A1J6–12	
37	FRI 10p	J208–3	D3A1J6–6	
38	FRI 10n	J208–11	D3A1J6–5	
39	FRI 1Up	J208–4	D3A1J6–7	
40	FRI 1Un	J208–12	D3A1J6–8	
41	SW3	J208–5	D3A1J6–3	
42	FPIIEN	J208–13	D3A1J6–4	
43	AUX CTRL SWn	J208–6	D3A1J6–2	
44	AUX CTRL SWp	J208–14	D3A1J6–1	
45	EMERGENCY STOP P (AUX LIMIT SW)	J208–7	D3A1J6–13	
46	AUX LIMIT SW	J208–8	D3A1J6–14	
47	LANGRID	J208–2	D3A1J6–11	
48	SW LVI COLL BIS	J201–5	D3B1J1–5	
49	FXB 11p	J201–1	D3B1J1–1	
50	FXB 11n	J201–2	D3B1J1–2	

N	SIGNAL	REST POINT BOARD OUTPUTS	DESTINATION	AXIS INTERCO BD II/ARC/PVT/L
51	A_GND	J211–4	D1A2P1–4	4 (L)
52	A_REF	J211–3	D1A2P1–3	3 (L)
53	A_POTp	J211–1	D1A2P1–1	1 (L)
54	A_POTn	J211–2	D1A2P1–2	2 (L)
55	B_GND	J207–4	D1B1P1–4	4 (PVT)
56	B_REF	J207–3	D1B1P1–3	3 (PVT)
57	B_POTp	J207–1	D1B1P1–1	1 (PVT)
58	B_POTn	J207–2	D1B1P1–2	2 (PVT)
59	B_PHAp	J207–14	D1B1P1–14	14 (PVT)
60	B_PHAn	J207–13	D1B1P1–13	13 (PVT)
61	B_PHBp	J207–9	D1B1P1–9	9 (PVT)
62	B_PHBn	J207–10	D1B1P1–10	10 (PVT)
63	D_PHAp	J203–14	D3A1P1–14	14 (II)
64	D_PHAn	J203–13	D3A1P1–13	13 (II)
65	D_PHBp	J203–9	D3A1P1–9	9 (II)
66	D_PHBn	J203–10	D3A1P1–10	10 (II)
67	D_ GND	J203–4	D3A1P1–4	4 (II)
68	D_REF	J203–3	D3A1P1–3	3 (II)
69	D_POTp	J203–1	D3A1P1–1	1 (II)
70	D_POTn	J203–2	D3A1P1–2	2 (II)
71	0V Vacuum	J212–2		
72	0V Vacuum	J212–8		
73				
74				
75				
76				
77				
78				
79	FPII HDSTP	J203–6	D3A1P1–6	6 (II)
80	D_HDSTP	J203–8	D3A1P1–8	8 (II)
81	D_HDSTP	J203–5	D3A1P1–5	5 (II)
82	D_LIMSWn	J203–7	D3A1P1–7	7 (II)
83	HDSTP	J211–6 (L) J207–6 (PVT) J204–6 (ARC)	D1A2P1–6 (L) D1B1P1–6 (PVT) D1B1P1–6 (ARC)	6 (L) 6 (PVT) 6 (ARC)
84	A_HDSTP	J211–8	D1A2P1–8	8 (L)
85	A_HDSTP	J211–5	D1A2P1–5	5 (L)
86	A_LIMSWn	J211–7	D1A2P1–7	7 (L)
87	HDSTP	J211–6 (L) J207–6 (PVT) J204–6 (ARC)	D1A2P1–6 (L) D1B1P1–6 (PVT) D1B1P1–6 (ARC)	6 (L) 6 (PVT) 6 (ARC)
88	B_HDSTP	J207–8	D1B1P1–8	8 (PVT)
89	B_HDSTP	J207–5	D1B1P1–5	5 (PVT)
90	B_LIMSWn	J207–7	D1B1P1–7	7 (PVT)
91	HDSTP	J211–6 (L) J207–6 (PVT) J204–6 (ARC)	D1A2P1–6 (L) D1B1P1–6 (PVT) D1B1P1–6 (ARC)	6 (L) 6 (PVT) 6 (ARC)
92	C_HDSTP	J204–8	D2A1P1–8	8 (ARC)
93	C_HDSTP	J204–5	D2A1P1–5	5 (ARC)
94	C_LIMSWn	J204–7	D2A1P1–7	7 (ARC)
95				
96	P24R	J212–5	D1E1J1–1	
97				
98				
99	P24 FUSED	J202–1	D1B1P6–1	
100	SW1–	J202–2	D1B1P6–2	

EXTERNAL CONNECTORS DESCRIPTION (3/3)

J206 – POS. CABINET COLL/C. FILTERS (FROM POS CABLE: COLL/ CONTOURING F.)

N	SIGNAL	REST POINT BOARD OUTPUTS	COLLIMATOR	CONTOUR FILTER
1	FGA1	J210–7		7
2	GND	J210–18		18
3	ROTB1	J210–8		8
4	FDB1	J210–3		3
5	ROTATION 1	J210–11		11
6	GND		MM	
7	ROTM1A	J210–5		5
8	ROTM2A	J210–4		4
9	OBL+1	J209–13	FF	
10	FILTER_P1	J209–12	R	
11	GND	J209–4/9/10	S	
12	GND		T	
13	P10 REF1_2	J209–7	BB	
14	P20V1	J209–6	D	
15	GND		HH	
16	M2VLONG1	J209–3	B	
17	W11R1S1	J209–1	U	
18	FGB1	J210–6		6
19	ROTA1	J210–9		9
20	FDA1	J210–19		19
21	GND	J210–25		
22	CONTOUR_1	J210–24		24
23	GND		NN	
24	FGM2A	J210–15		15
25	FDM1A	J210–2		2
26	OBL–1	J209–25	W	
27	KEY1	J209–11	V	
28	TUBE_SEL_1	J209–22	K	
29	P1C1	J209–8	L	
30	P2C1	J209–19	AA	
31	P3C1	J209–5	J	
32	M1VLONG1	J209–16	H	
33	M1VLAT1	J209–2	X	
34	FG_INDEX_1	J210–13		13
35	FD_INDEX_1	J210–12		12
36	GND	J210–23	F	23

N	SIGNAL	REST POINT BOARD OUTPUTS	COLLIMATOR	CONTOUR FILTER
37	ROT_INDEX_1	J210–14		14
38	GND		N	
39	P5V1	J210–20		20
40	FGM1A	J210–16		16
41	FDM2A	J210–1		1
42				
43	F_LAMP_B1	J209–24	C	
44	SAFETY_1	J209–23	JJ	
45	P10 REF1_1	J209–21	M	
46	P10V1	J209–20	DD	
47	P30V1	J209–18	A	
48	P10 REF1_3	J209–17	CC	
49	M2V LAT1	J209–15	Y	
50	M21R1S1	J209–14	P	

REV		MODIFIE PAR	VERIFIE PAR	DATE	NUMERO MODIF.	DESCRIPTION
B		SEAL FPT	BAYLE	15/05/98	BUCge25787	AJ BRK2-PVT

REVISIONS

ATTENTION
RESPECTER LE DETROMPAGE

J100
(VUE COTE CONTACTS)

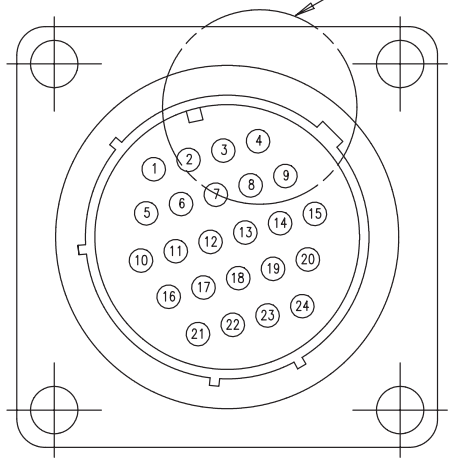

J100
(VUE COTE CABLAGE)

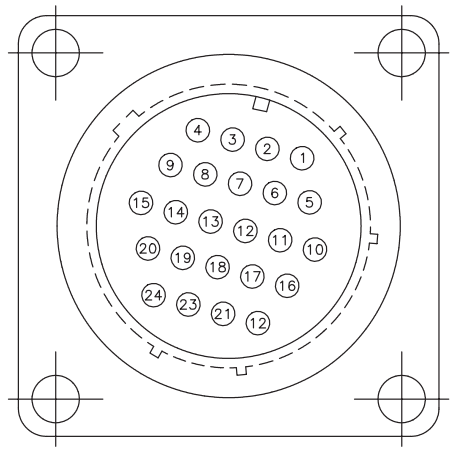

DIAGRAMME DE CABLAGE

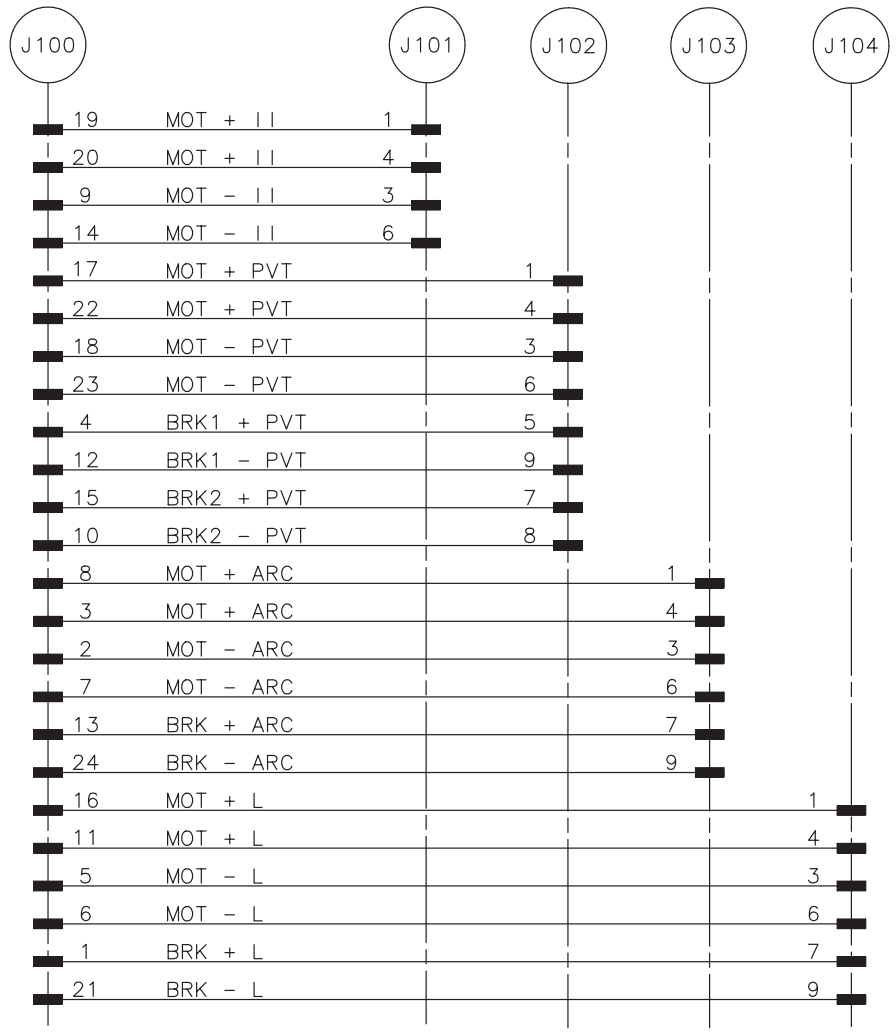

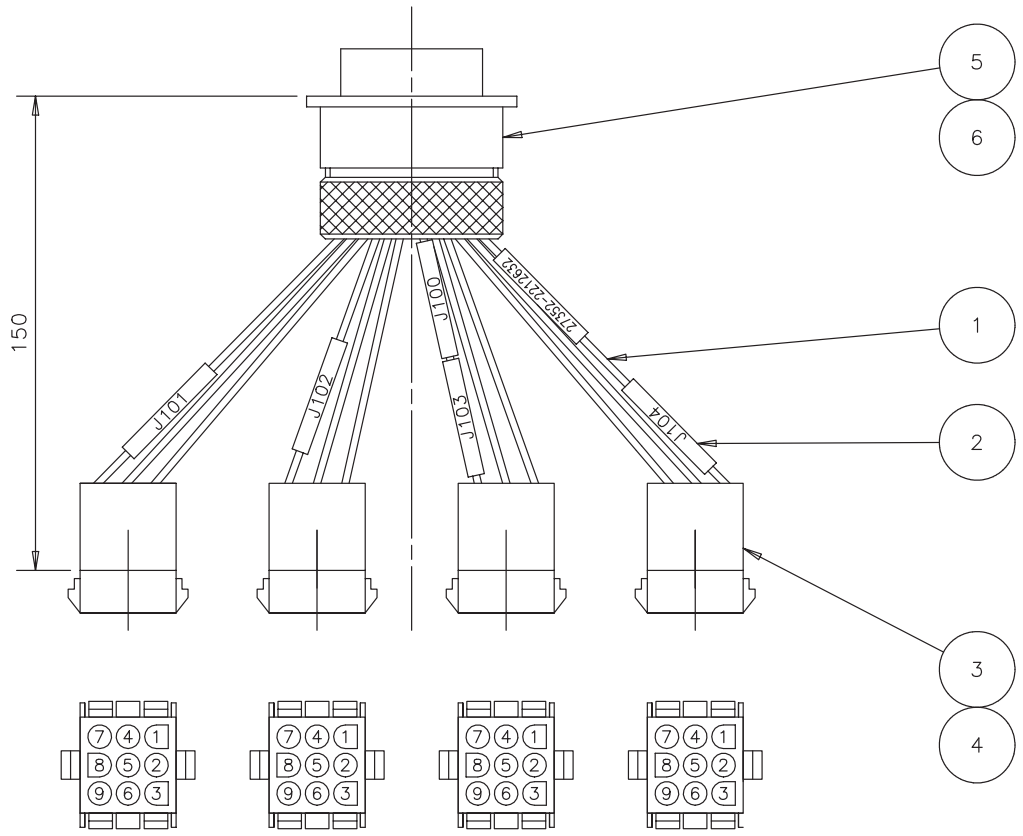

(VUE COTE CABLAGE)

Ce document est la propriete de GE Medical Systems. Il ne peut etre ni reproduit, ni communique a des tiers sans autorisation ecrite d'une personne mandatee specialement a cet effet par la dite Societe.

DISPOSITION DES VUES

TOLERANCES GENERALES
LONGUEUR ≤ 2M : ±0,02 M/M AVEC UN MINIMUM DE ±0,01M.
LONGUEUR > 2M : ±0,04 M/M.

TITRE **27352-TORON REPOS PUISSANCE** REV **B**
PROJET EVEREST

FAIT PAR SEAL PMN 09/04/98
VERIFIE PAR BAYLE 09/04/98

GE Medical Systems
BUC-FRANCE

2212632ADW
PAGE 001/001

A2

REV		MODIFIE PAR	VERIFIE PAR	DATE	NUMERO MODIF.	DESCRIPTION
B		SEAL FPT	PAJARES	07/08/98		CHGT PTS ENTRE LIMSW ET HDSTP

REVISIONS

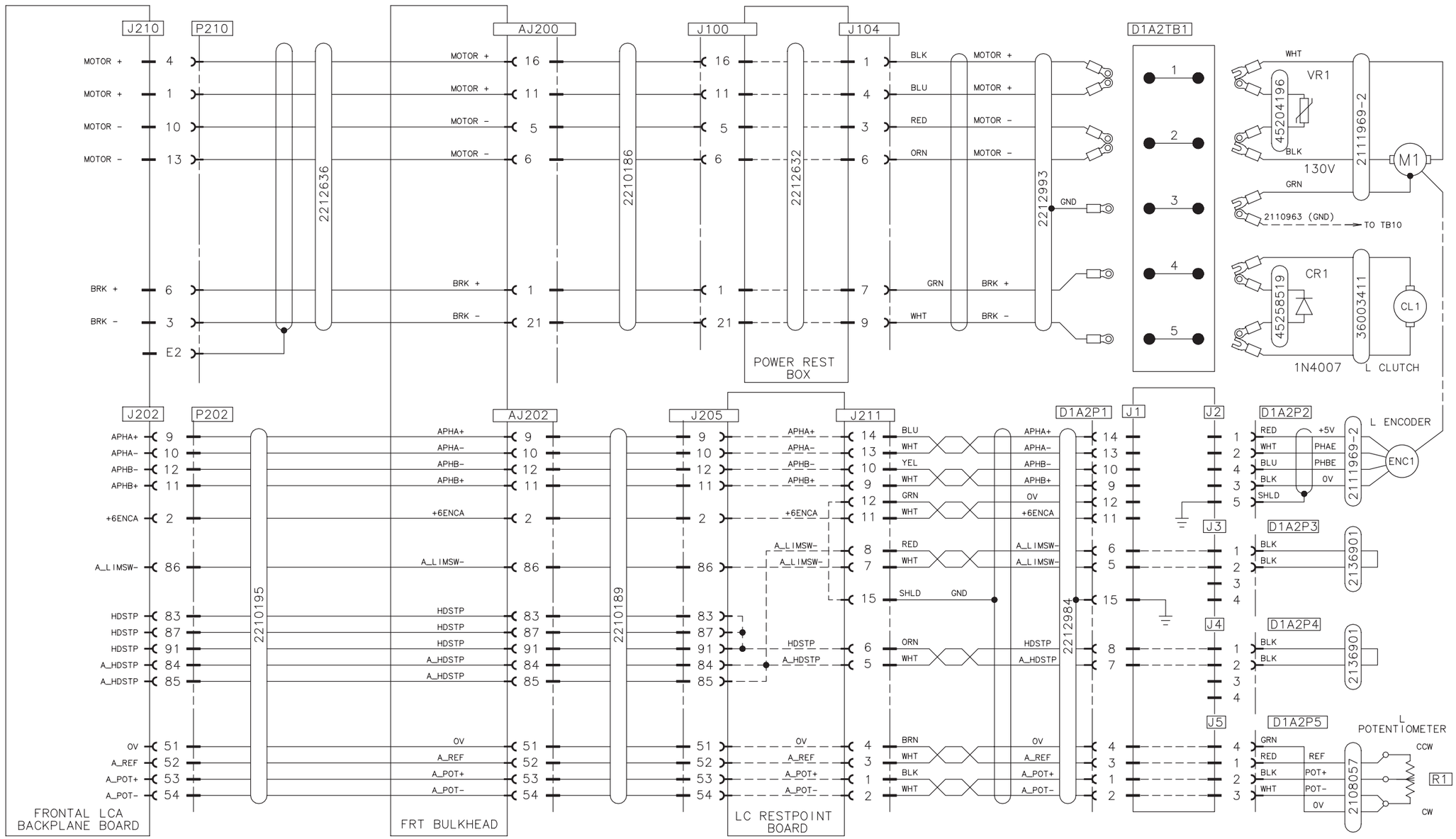

Ce document est la propriete de GE Medical Systems. Il ne peut etre ni reproduit, ni communique a des tiers sans autorisation ecrite d'une personne mandatee specialement a cet effet par la dite Societe.

DISPOSITION DES VUES

TOLERANCES GENERALES: LONGUEUR ≤ 2M : ±0,02 M/M AVEC UN MINIMUM DE ±0,01M. LONGUEUR > 2M : ±0,04 M/M.

TITRE: ENSEMBLE MECANIQUE LCA2+ — REV B

PROJET: EVEREST

FAIT PAR: SEAL JPC 05/06/98 — VERIFIE PAR: PAJARES 15/06/98

GE Medical Systems BUC-FRANCE — 2221705SCH — PAGE 002/007

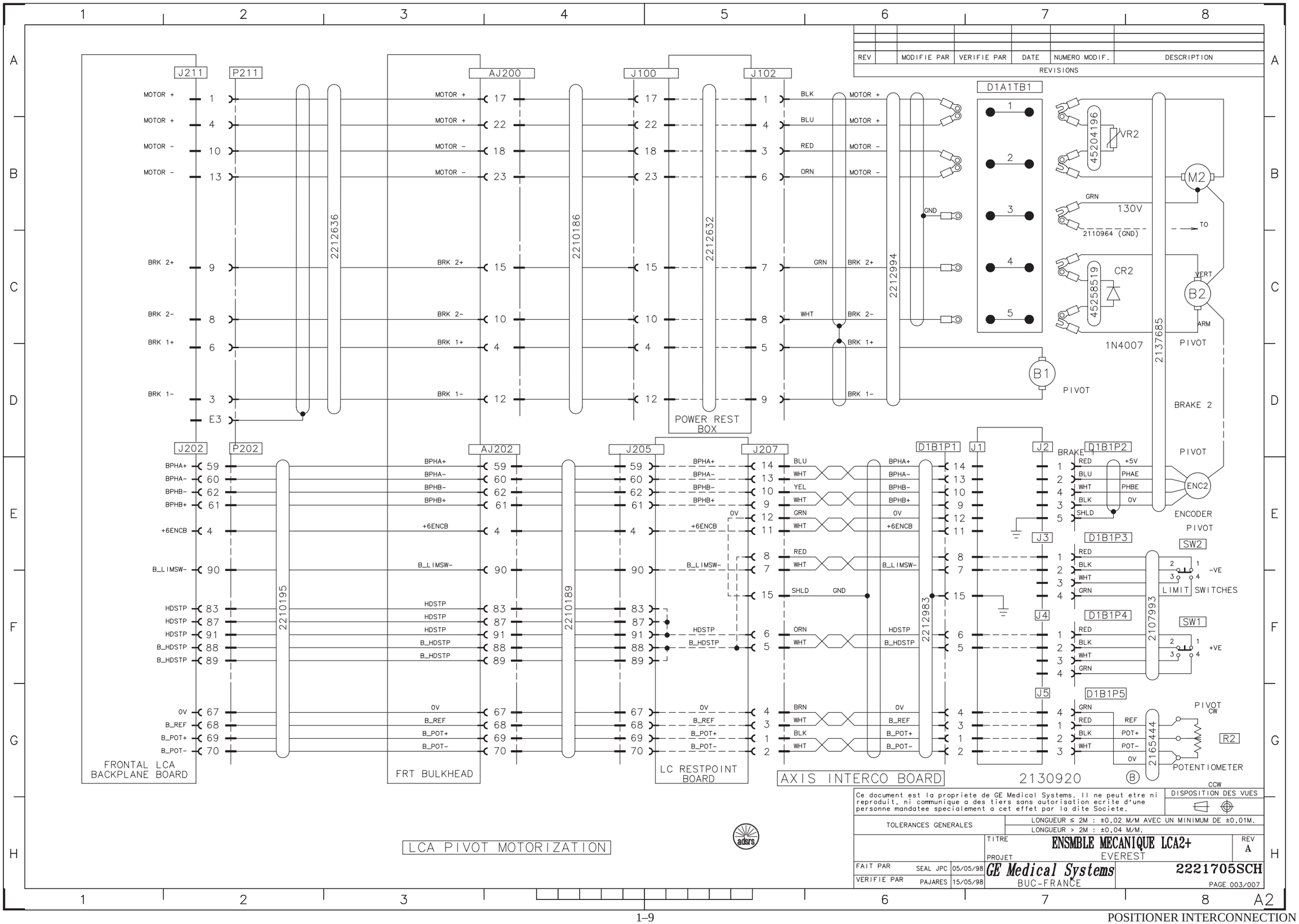

Ce document est la propriete de GE Medical Systems. Il ne peut etre ni reproduit, ni communique a des tiers sans autorisation ecrite d'une personne mandatee specialement a cet effet par la dite Societe.

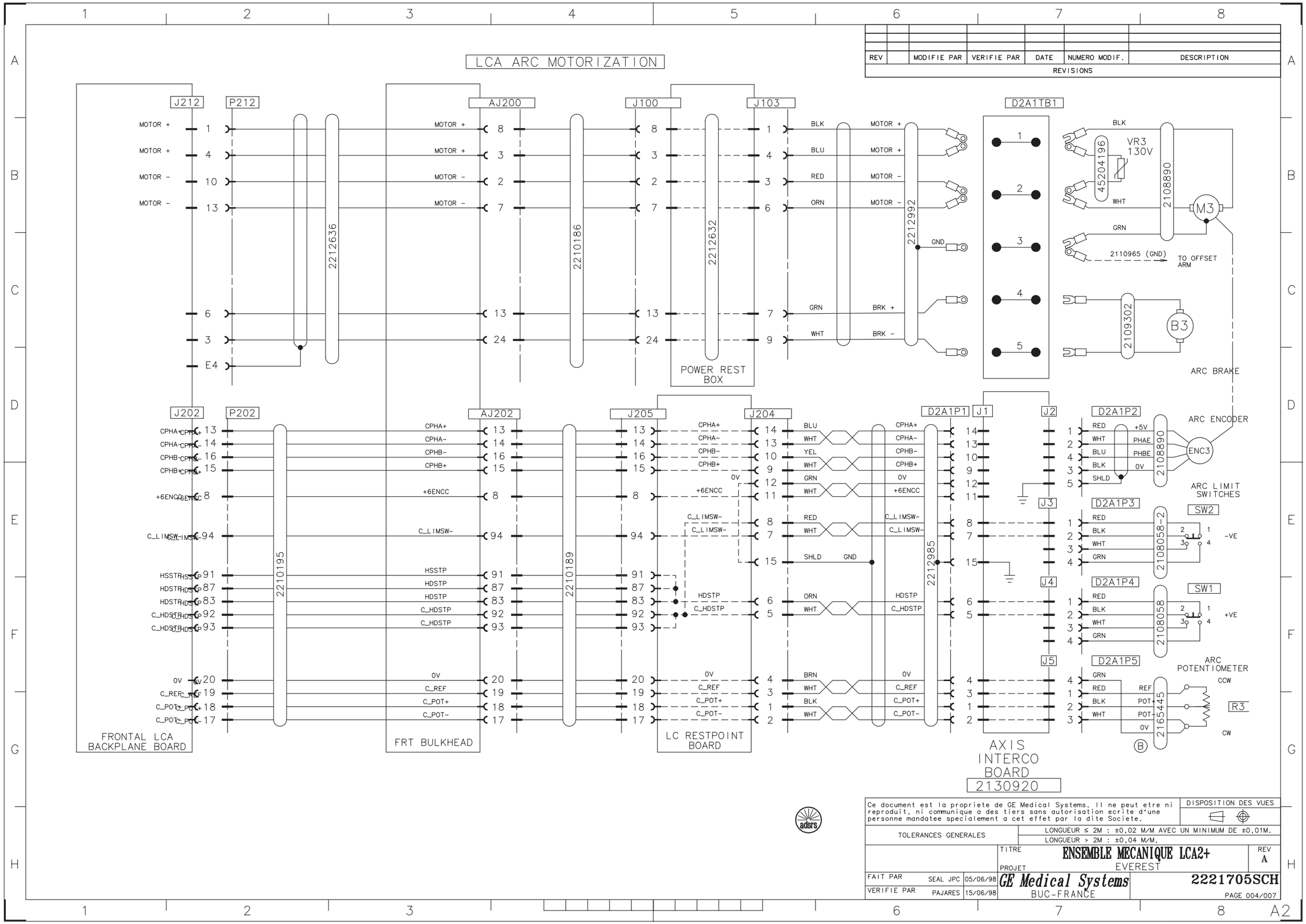
LCA ARC MOTORIZATION
REV | MODIFIE PAR | VERIFIE PAR | DATE | NUMERO MODIF. | DESCRIPTION
REVISIONS
J212 P212 AJ200 J100 J103 D2A1TB1
MOTOR + 1
MOTOR + 4
MOTOR - 10
MOTOR - 13
6
3
E4
2212636
2210186
2212632
POWER REST BOX
BLK MOTOR +
BLU MOTOR +
RED MOTOR -
ORN MOTOR -
GND
GRN BRK +
WHT BRK -
2212992
VR3 130V
45204196
2108890
M3
2110965 (GND)
TO OFFSET ARM
2109302
B3
ARC BRAKE
J202 P202 AJ202 J205 J204 D2A1P1 J1 J2 D2A1P2
CPHA+ CPHA- CPHB- CPHB+ +6ENCC C_LIMSW- HSSTP HDSTP C_HDSTP 0V C_REF C_POT+ C_POT-
2210195
2210189
2212985
ARC ENCODER
RED +5V
WHT PHAE
BLU PHBE
BLK 0V
SHLD
ENC3
ARC LIMIT SWITCHES
J3 D2A1P3 SW2
RED BLK WHT GRN
-VE
J4 D2A1P4 SW1
+VE
J5 D2A1P5
ARC POTENTIOMETER
GRN RED BLK WHT
REF POT+ POT- 0V
CCW CW
R3
FRONTAL LCA BACKPLANE BOARD
FRT BULKHEAD
LC RESTPOINT BOARD
AXIS INTERCO BOARD
2130920
Ce document est la propriete de GE Medical Systems. Il ne peut etre ni reproduit, ni communique a des tiers sans autorisation ecrite d'une personne mandatee specialement a cet effet par la dite Societe.
DISPOSITION DES VUES
TOLERANCES GENERALES
LONGUEUR ≤ 2M : ±0,02 M/M AVEC UN MINIMUM DE ±0,01M.
LONGUEUR > 2M : ±0,04 M/M.
TITRE ENSEMBLE MECANIQUE LCA2+
REV A
PROJET EVEREST
FAIT PAR SEAL JPC 05/06/98
VERIFIE PAR PAJARES 15/06/98
GE Medical Systems
BUC-FRANCE
2221705SCH
PAGE 004/007
A2

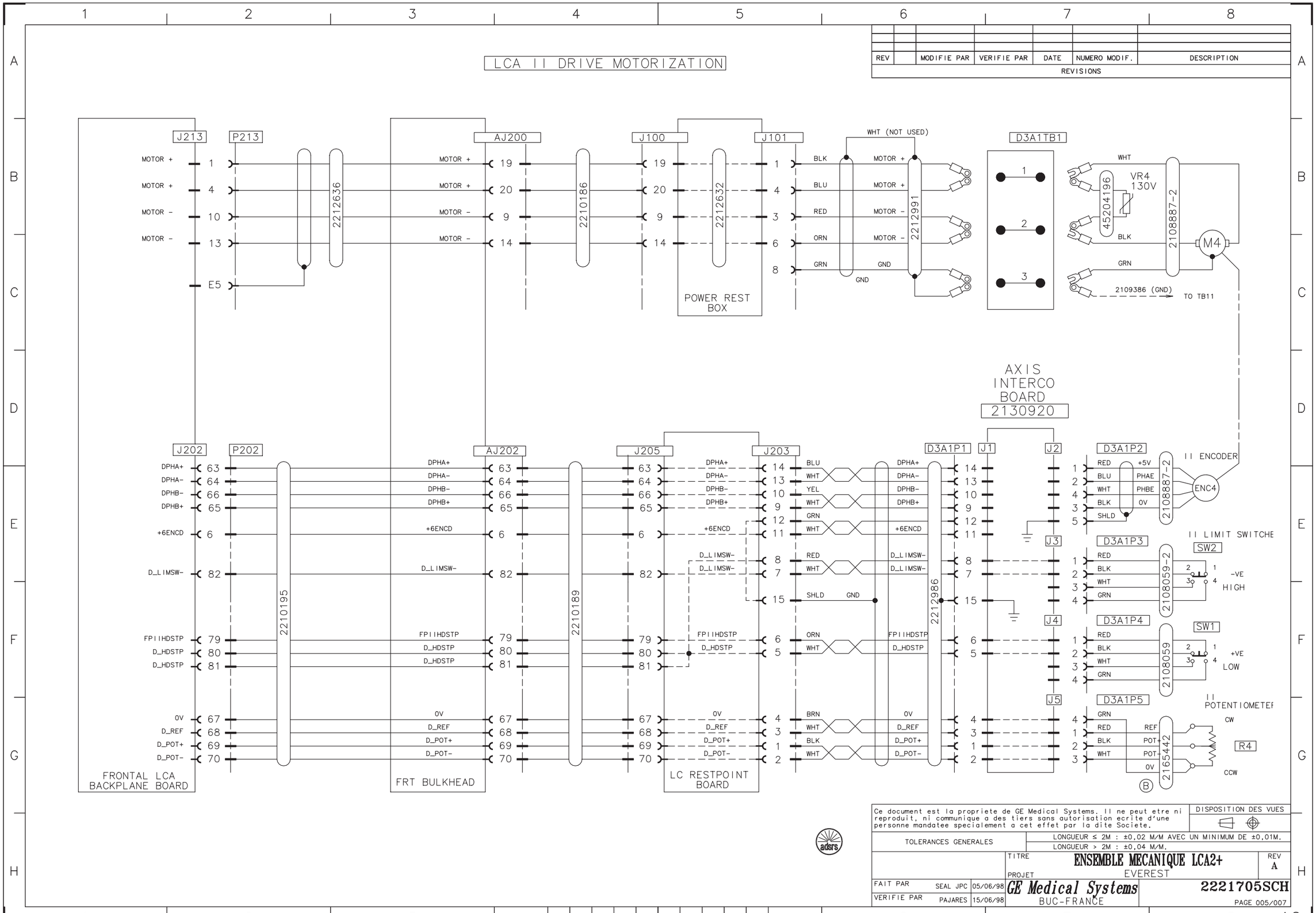
LCA II DRIVE MOTORIZATION
REV | MODIFIE PAR | VERIFIE PAR | DATE | NUMERO MODIF. | DESCRIPTION
REVISIONS
J213 P213 2212636 AJ200 2210186 J100 J101 2212632 POWER REST BOX
MOTOR + 1
MOTOR + 4
MOTOR - 10
MOTOR - 13
E5
MOTOR + 19
MOTOR + 20
MOTOR - 9
MOTOR - 14
BLK BLU RED ORN GRN
WHT (NOT USED)
GND
2212991
D3A1TB1
WHT
VR4 130V
45204196
BLK
GRN
2108887-2
M4
2109386 (GND)
TO TB11
AXIS INTERCO BOARD 2130920
J202 P202 2210195 AJ202 2210189 J205 J203 D3A1P1 J1 J2
DPHA+ 63
DPHA- 64
DPHB- 66
DPHB+ 65
+6ENCD 6
D_LIMSW- 82
FPIIHDSTP 79
D_HDSTP 80
D_HDSTP 81
0V 67
D_REF 68
D_POT+ 69
D_POT- 70
BLU WHT YEL WHT GRN WHT RED WHT SHLD GND ORN WHT BRN WHT BLK WHT
2212986
D3A1P2 RED BLU WHT BLK SHLD +5V PHAE PHBE 0V
II ENCODER
ENC4
2108887-2
J3 D3A1P3 RED BLK WHT GRN
II LIMIT SWITCHE
SW2
-VE HIGH
2108059-2
J4 D3A1P4 RED BLK WHT GRN
SW1
+VE LOW
2108059
J5 D3A1P5 GRN RED BLK WHT REF POT+ POT- 0V
II POTENTIOMETEF
CW
R4
CCW
2165442
FRONTAL LCA BACKPLANE BOARD
FRT BULKHEAD
LC RESTPOINT BOARD
Ce document est la propriete de GE Medical Systems. Il ne peut etre ni reproduit, ni communique a des tiers sans autorisation ecrite d'une personne mandatee specialement a cet effet par la dite Societe.
DISPOSITION DES VUES
TOLERANCES GENERALES
LONGUEUR ≤ 2M : ±0,02 M/M AVEC UN MINIMUM DE ±0,01M.
LONGUEUR > 2M : ±0,04 M/M.
TITRE ENSEMBLE MECANIQUE LCA2+
REV A
PROJET EVEREST
FAIT PAR SEAL JPC 05/06/98
VERIFIE PAR PAJARES 15/06/98
GE Medical Systems
BUC-FRANCE
2221705SCH
PAGE 005/007
A2

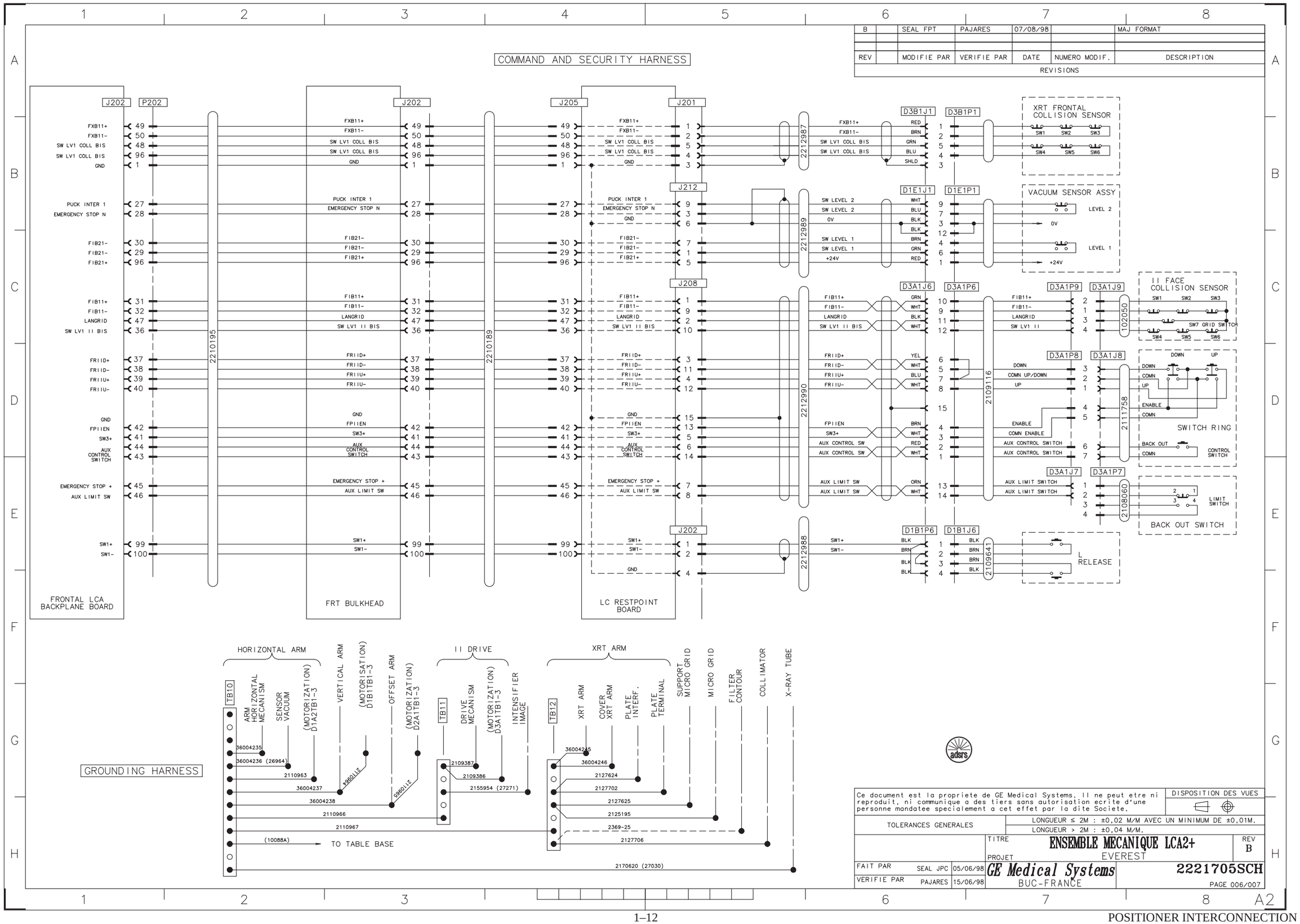
COMMAND AND SECURITY HARNESS
B | SEAL FPT | PAJARES | 07/08/98 | MAJ FORMAT
REV | MODIFIE PAR | VERIFIE PAR | DATE | NUMERO MODIF. | DESCRIPTION
REVISIONS
J202 P202
FXB11+ 49
FXB11- 50
SW LV1 COLL BIS 48
SW LV1 COLL BIS 96
GND 1
PUCK INTER 1 27
EMERGENCY STOP N 28
FIB21- 30
FIB21- 29
FIB21+ 96
FIB11+ 31
FIB11- 32
LANGRID 47
SW LV1 II BIS 36
FRIID+ 37
FRIID- 38
FRIIU+ 39
FRIIU- 40
GND
FPIIEN 42
SW3+ 41
AUX CONTROL SWITCH 44 43
EMERGENCY STOP + 45
AUX LIMIT SW 46
SW1+ 99
SW1- 100
FRONTAL LCA BACKPLANE BOARD
2210195
J202
FRT BULKHEAD
2210189
J205 J201
J212
J208
J202
LC RESTPOINT BOARD
2212987
2212989
2212990
2212988
D3B1J1 D3B1P1
RED BRN GRN BLU SHLD
XRT FRONTAL COLLISION SENSOR
SW1 SW2 SW3 SW4 SW5 SW6
D1E1J1 D1E1P1
WHT BLU BLK BRN GRN RED
VACUUM SENSOR ASSY
LEVEL 2
0V
LEVEL 1
+24V
D3A1J6 D3A1P6
GRN WHT BLK WHT YEL WHT BLU WHT BRN WHT RED WHT ORN WHT
2109116
D3A1P9 D3A1J9
102050
II FACE COLLISION SENSOR
SW7 GRID SWITCH
D3A1P8 D3A1J8
2111758
DOWN UP
COMN UP/DOWN
ENABLE
COMN ENABLE
AUX CONTROL SWITCH
SWITCH RING
BACK OUT
CONTROL SWITCH
D3A1J7 D3A1P7
AUX LIMIT SWITCH
2108060
LIMIT SWITCH
BACK OUT SWITCH
D1B1P6 D1B1J6
BLK BRN BRN BLK
2109641
L RELEASE
GROUNDING HARNESS
HORIZONTAL ARM
II DRIVE
XRT ARM
TB10
ARM HORIZONTAL MECANISM
SENSOR VACUUM
(MOTORIZATION) D1A2TB1-3
VERTICAL ARM
(MOTORISATION) D1B1TB1-3
OFFSET ARM
(MOTORIZATION) D2A1TB1-3
TB11
DRIVE MECANISM
(MOTORIZATION) D3A1TB1-3
INTENSIFIER IMAGE
TB12
XRT ARM
COVER XRT ARM
PLATE INTERF.
PLATE TERMINAL
SUPPORT MICRO GRID
MICRO GRID
FILTER CONTOUR
COLLIMATOR
X-RAY TUBE
36004235
36004236 (26964)
2110963
36004237
36004238
2110966
2110967
(10088A)
TO TABLE BASE
2110984
2110985
2109387
2109386
2155954 (27271)
36004245
36004246
2127624
2127702
2127625
2125195
2369-25
2127706
2170620 (27030)
Ce document est la propriete de GE Medical Systems. Il ne peut etre ni reproduit, ni communique a des tiers sans autorisation ecrite d'une personne mandatee specialement a cet effet par la dite Societe.
DISPOSITION DES VUES
TOLERANCES GENERALES
LONGUEUR ≤ 2M : ±0,02 M/M AVEC UN MINIMUM DE ±0,01M.
LONGUEUR > 2M : ±0,04 M/M.
TITRE ENSEMBLE MECANIQUE LCA2+
REV B
PROJET EVEREST
FAIT PAR SEAL JPC 05/06/98
VERIFIE PAR PAJARES 15/06/98
GE Medical Systems
BUC-FRANCE
2221705SCH
PAGE 006/007
A2

COMMAND AND SECURITY HARNESS

COLLIMATOR AND CONTOURING FILTER

REV		MODIFIE PAR	VERIFIE PAR	DATE	NUMERO MODIF.	DESCRIPTION
REVISIONS						

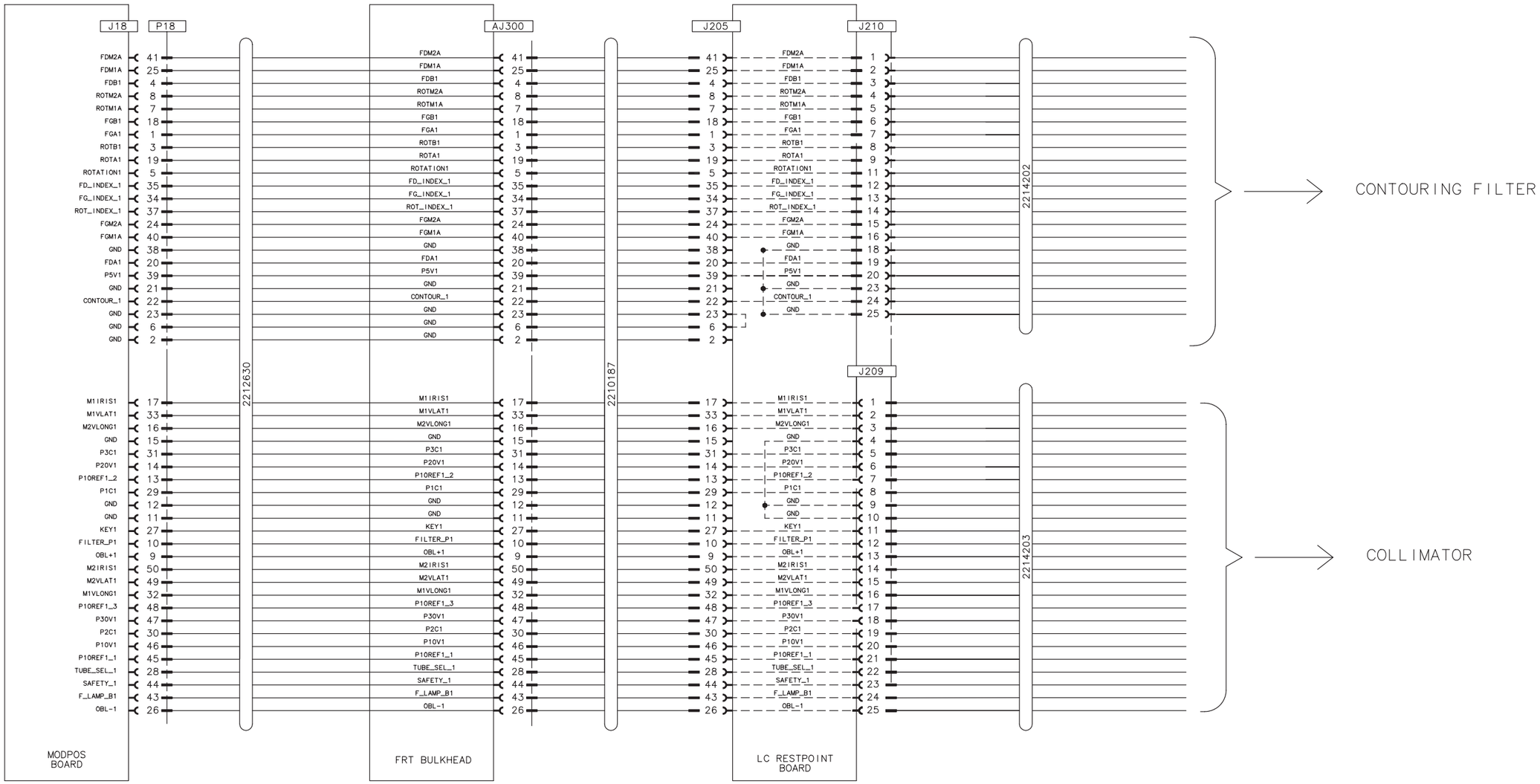

Ce document est la propriete de GE Medical Systems. Il ne peut etre ni reproduit, ni communique a des tiers sans autorisation ecrite d'une personne mandatee specialement a cet effet par la dite Societe.

DISPOSITION DES VUES

TOLERANCES GENERALES: LONGUEUR ≤ 2M : ±0,02 M/M AVEC UN MINIMUM DE ±0,01M. LONGUEUR > 2M : ±0,04 M/M.

TITRE: ENSEMBLE MECANIQUE LCA2+ — REV A

PROJET: EVEREST

FAIT PAR: SEAL FPT 05/06/98

VERIFIE PAR: PAJARES 15/06/98

GE Medical Systems BUC-FRANCE

2221705SCH

PAGE 001/001

A2

Blank page.

2. ELECTRONIC BOARDS

TITLE	DRAWING NUMBER	PAGE NUMBER
LC Rest Point Board Component Layout	2211392 ADW	2–2
LC Rest Point Board Circuit Diagram (1/3 to 3/3)	2211392 SCH	2–3 TO 2–5
Axis Interconnection Board Component Layout	2130920 ADW	2–6
Axis Interconnection Board Circuit Diagram	2130920 SCH	2–7 TO 2–9
Collision Sensor Block Diagram	–	2–10
Collision Sensor Board Component Layout	2102376 ADW	2–11
Collision Sensor Board Circuit Diagram	2102376 SCH	2–12 TO 2–14

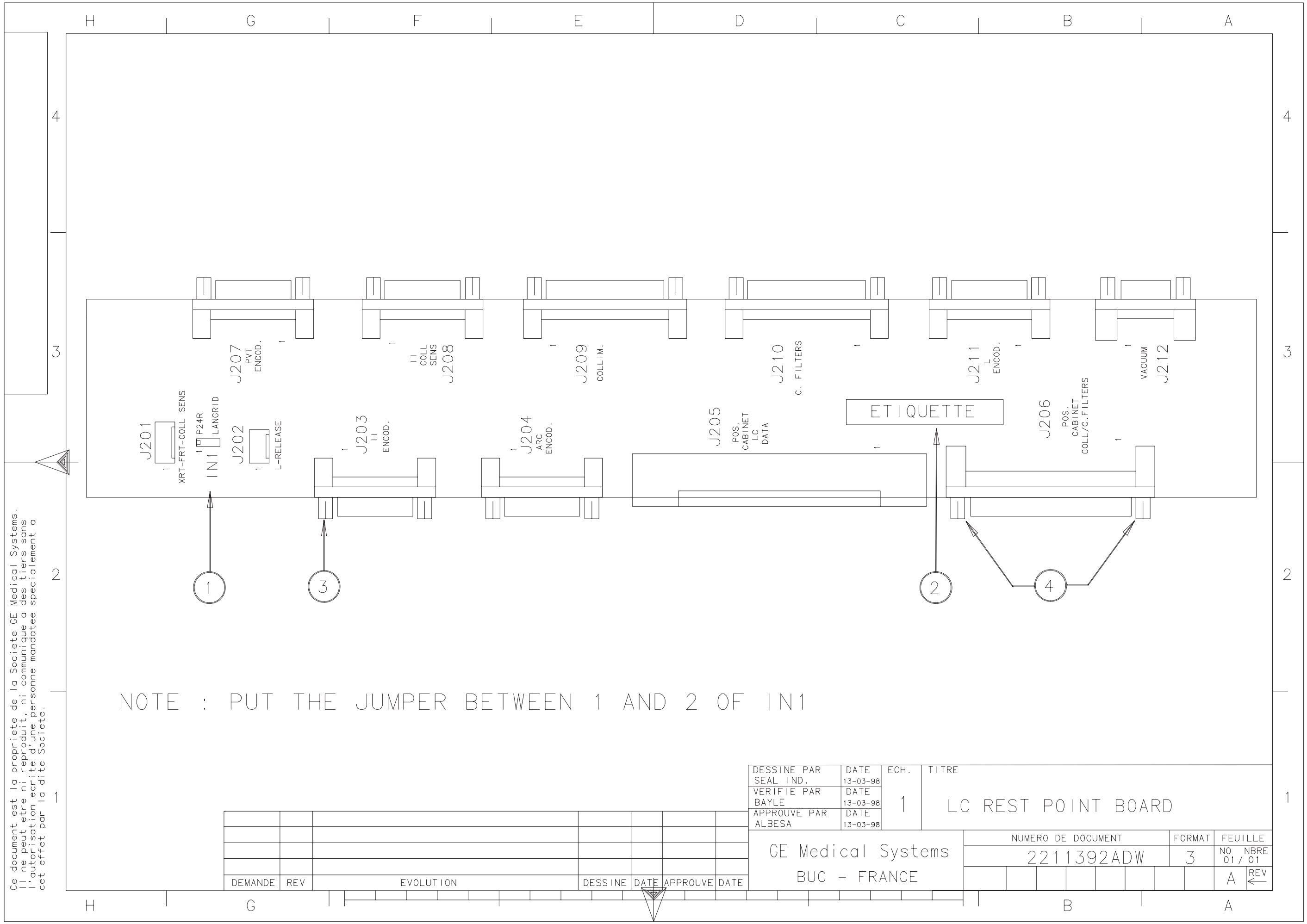

Ce document est la propriete de la Societe GE Medical Systems.
Il ne peut etre ni reproduit, ni communique a des tiers sans
l'autorisation ecrite d'une personne mandatee specialement a
cet effet par la dite Societe.

DESSINE PAR	DATE	ECH.	TITRE
SEAL IND.	13-03-98	1	LC REST POINT BOARD
VERIFIE PAR BAYLE	DATE 13-03-98		
APPROUVE PAR ALBESA	DATE 13-03-98		

DEMANDE	REV	EVOLUTION	DESSINE	DATE	APPROUVE	DATE

GE Medical Systems
BUC - FRANCE

NUMERO DE DOCUMENT	FORMAT	FEUILLE
2211392ADW	3	NO NBRE 01 / 01
		A REV

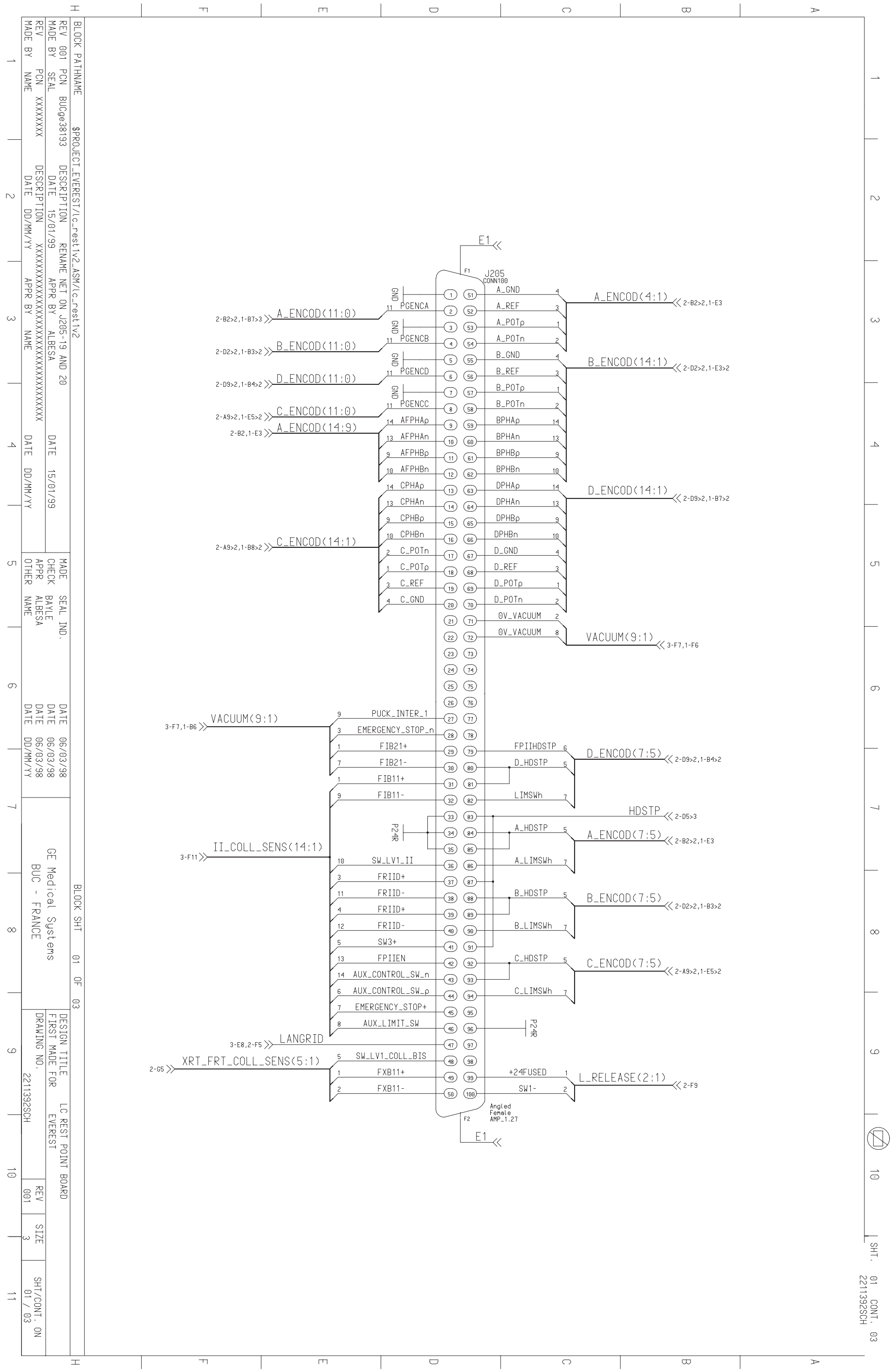
BLOCK PATHNAME $PROJECT_EVEREST/lc_rest.1v2_ASM/lc_rest.1v2
REV 001 PCN BUCge38193 DESCRIPTION RENAME NET ON J205-19 AND 20
MADE BY SEAL DATE 15/01/99 APPR BY ALBESA DATE 15/01/99
REV PCN XXXXXXXX DESCRIPTION XXXXXXXXXXXXXXXXXXXXXXXXXXXXXXXXXXXX
MADE BY NAME DATE DD/MM/YY APPR BY NAME DATE DD/MM/YY
MADE SEAL IND. DATE 06/03/98
CHECK BAYLE DATE 06/03/98
APPR ALBESA DATE 06/03/98
OTHER NAME DATE DD/MM/YY
GE Medical Systems
BUC - FRANCE
BLOCK SHT 01 OF 03
DESIGN TITLE LC REST POINT BOARD
FIRST MADE FOR EVEREST
DRAWING NO. 2211392SCH
REV 001
SIZE 3
SHT/CONT. ON 01 / 03
E1
J205
CONN100
A_GND
A_REF
A_POTp
A_POTn
B_GND
B_REF
B_POTp
B_POTn
BPHAp
BPHAn
BPHBp
BPHBn
DPHAp
DPHAn
DPHBp
DPHBn
D_GND
D_REF
D_POTp
D_POTn
0V_VACUUM
0V_VACUUM
PGENCA
PGENCB
PGENCD
PGENCC
AFPHAp
AFPHAn
AFPHBp
AFPHBn
CPHAp
CPHAn
CPHBp
CPHBn
C_POTn
C_POTp
C_REF
C_GND
PUCK_INTER_1
EMERGENCY_STOP_n
FIB21+
FIB21-
FIB11+
FIB11-
SW_LV1_II
FRIID+
FRIID-
FRIID+
FRIID-
SW3+
FPIIEN
AUX_CONTROL_SW_n
AUX_CONTROL_SW_p
EMERGENCY_STOP+
AUX_LIMIT_SW
SW_LV1_COLL_BIS
FXB11+
FXB11-
FPIIHDSTP
D_HDSTP
LIMSWh
A_HDSTP
A_LIMSWh
B_HDSTP
B_LIMSWh
C_HDSTP
C_LIMSWh
+24FUSED
SW1-
P24R
Angled
Female
AMP_1.27
A_ENCOD(11:0)
B_ENCOD(11:0)
D_ENCOD(11:0)
C_ENCOD(11:0)
A_ENCOD(14:9)
C_ENCOD(14:1)
VACUUM(9:1)
II_COLL_SENS(14:1)
LANGRID
XRT_FRT_COLL_SENS(5:1)
A_ENCOD(4:1)
B_ENCOD(14:1)
D_ENCOD(14:1)
VACUUM(9:1)
D_ENCOD(7:5)
HDSTP
A_ENCOD(7:5)
B_ENCOD(7:5)
C_ENCOD(7:5)
L_RELEASE(2:1)
SHT. 01 CONT. 03
2211392SCH

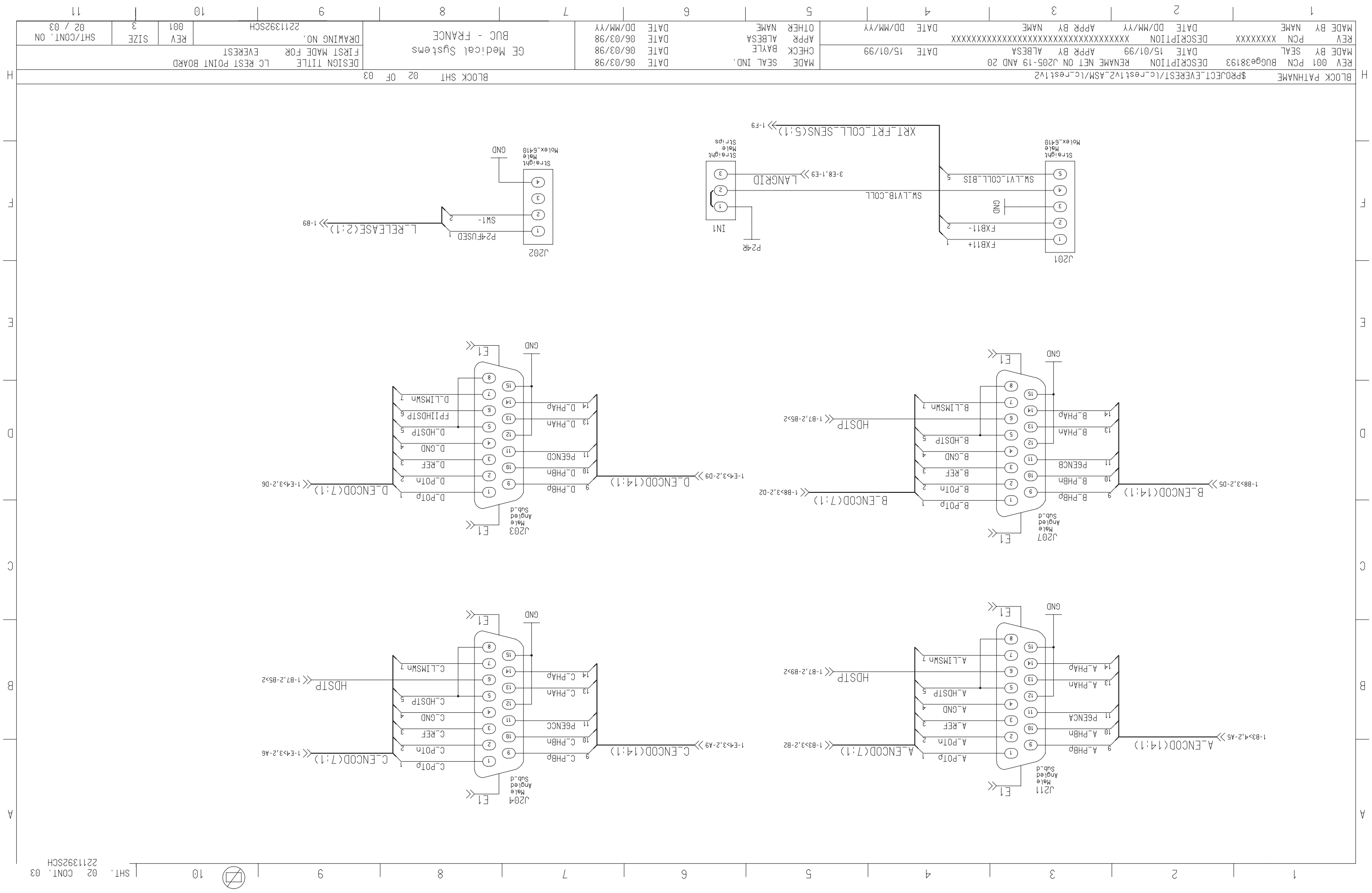
BLOCK PATHNAME $PROJECT_EVEREST/lc_rest1v2_ASM/lc_rest1v2
BLOCK SHT 02 OF 03
REV 001 PCN BUGge38193 DESCRIPTION RENAME NET ON J205-19 AND 20 DATE 15/01/99 APPR BY ALBESA
MADE BY SEAL DATE 15/01/99 APPR BY ALBESA DATE 15/01/99
REV PCN DESCRIPTION DATE DD/MM/YY APPR BY NAME
MADE BY NAME DATE DD/MM/YY
MADE SEAL IND. DATE 06/03/98
CHECK BAYLE DATE 06/03/98
APPR ALBESA DATE 06/03/98
OTHER NAME DATE DD/MM/YY
GE Medical Systems
BUC - FRANCE
DESIGN TITLE LC REST POINT BOARD
FIRST MADE FOR EVEREST
DRAWING NO. 2211392SCH
REV 001
SIZE 3
SHT/CONT. ON 02 / 03
J201
Straight Male Molex_6410
FXB11+
FXB11-
GND
SW_LV1_COLL_BIS
SW_LV1B_COLL
P24R
IN1
LANGRID
3-E8,1-E9
XRT_FRT_COLL_SENS(5;1)
1-F9
J202
Straight Male Molex_6410
P24FUSED
SW1-
L_RELEASE(2;1)
1-B9
GND
J207
Male Angled Sub_d
B_POTp
B_POTn
B_REF
B_GND
B_HDSTP
B_LIMSWn
B_PHBp
B_PHBn
P6ENCB
B_PHAn
B_PHAp
B_ENCOD(7;1)
B_ENCOD(14;1)
1-B8>3,2-D2
1-B8>3,2-D5
HDSTP
1-B7,2-B5>2
J203
Male Angled Sub_d
D_POTp
D_POTn
D_REF
D_GND
D_HDSTP
FPIIHDSTP
D_LIMSWn
D_PHBp
D_PHBn
P6ENCD
D_PHAn
D_PHAp
D_ENCOD(7;1)
D_ENCOD(14;1)
1-E4>3,2-D6
1-E4>3,2-D9
J211
Male Angled Sub_d
A_POTp
A_POTn
A_REF
A_GND
A_HDSTP
A_LIMSWn
A_PHBp
A_PHBn
P6ENCA
A_PHAn
A_PHAp
A_ENCOD(7;1)
A_ENCOD(14;1)
1-B3>3,2-B2
1-B3>4,2-A5
HDSTP
1-B7,2-B3>2
J204
Male Angled Sub_d
C_POTp
C_POTn
C_REF
C_GND
C_HDSTP
C_LIMSWn
C_PHBp
C_PHBn
P6ENCC
C_PHAn
C_PHAp
C_ENCOD(7;1)
C_ENCOD(14;1)
1-E4>3,2-A6
1-E4>3,2-A9
HDSTP
1-B7,2-B5>2
GND
E1
SHT. 02 CONT. 03
2211392SCH

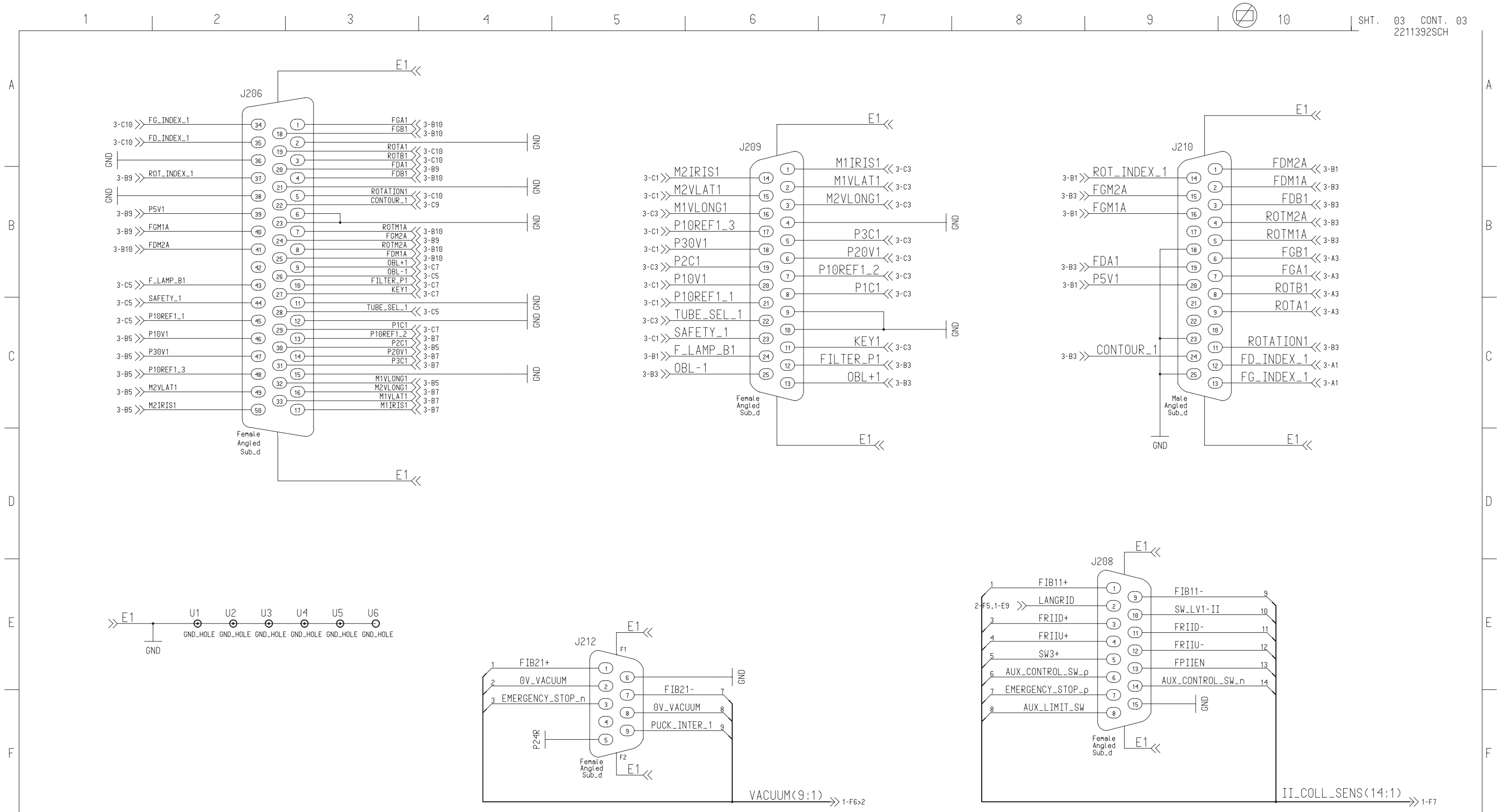

BLOCK PATHNAME $PROJECT_EVEREST/lc_rest1v2_ASM/lc_rest1v2					BLOCK SHT 03 OF 03			
REV 001 PCN BUCge38193 DESCRIPTION RENAME NET ON J205-19 AND 20	MADE SEAL IND.	DATE 06/03/98	GE Medical Systems	DESIGN TITLE LC REST POINT BOARD			
MADE BY SEAL DATE 15/01/99 APPR BY ALBESA DATE 15/01/99	CHECK BAYLE	DATE 06/03/98	BUC - FRANCE	FIRST MADE FOR EVEREST			
REV PCN XXXXXXXX DESCRIPTION XXXXXXXXXXXXXXXXXXXXXXXXXXXXXXXXXX	APPR ALBESA	DATE 06/03/98		DRAWING NO. 2211392SCH	REV 001	SIZE 3	SHT/CONT. ON 03 / 03
MADE BY NAME DATE DD/MM/YY APPR BY NAME DATE DD/MM/YY	OTHER NAME	DATE DD/MM/YY					

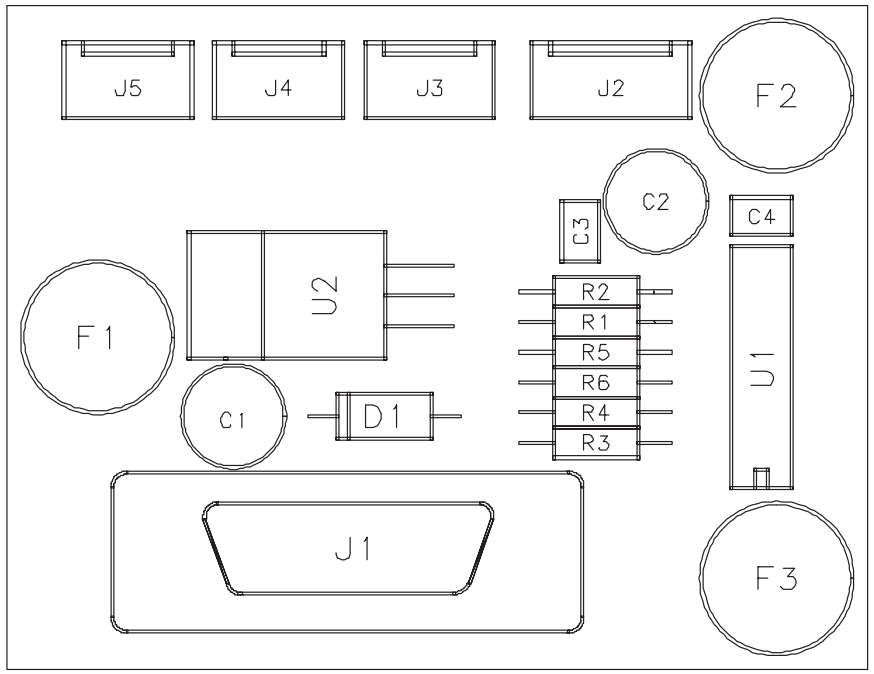

AXIS INTERCONNECT BOARD

2130920ADW A REV

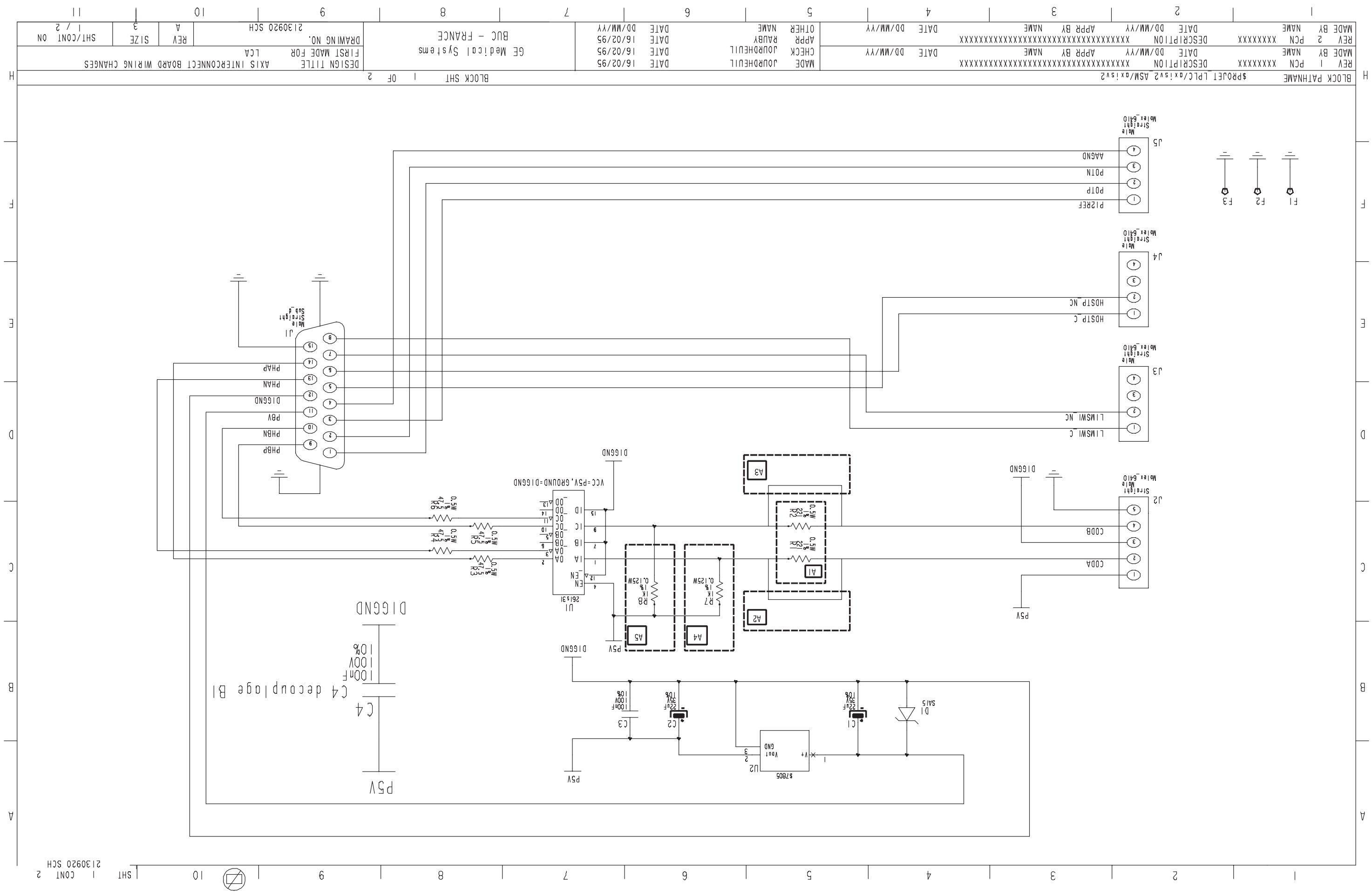
BLOCK PATHNAME $PROJET_LPLC/axisv2_ASM/axisv2
BLOCK SHT 1 OF 2
REV 1 PCN XXXXXXXX DESCRIPTION XXXXXXXXXXXXXXXXXXXXXXXXXXXXXXXXXXXXXXXX DATE DD/MM/YY APPR BY NAME MADE BY NAME
REV 2 PCN XXXXXXXX DESCRIPTION XXXXXXXXXXXXXXXXXXXXXXXXXXXXXXXXXXXXXXXX DATE DD/MM/YY APPR BY NAME DATE DD/MM/YY
MADE BY NAME CHECK JOURDHEUIL DATE 16/02/95
APPR RAUBY DATE 16/02/95
OTHER NAME DATE DD/MM/YY
GE Medical Systems
BUC - FRANCE
DESIGN TITLE AXIS INTERCONNECT BOARD WIRING CHANGES
FIRST MADE FOR LCA
DRAWING NO. 2130920 SCH
REV A
SIZE 3
SHT/CONT ON 1 / 2
F1 F2 F3
J5 Male Straight Molex_6410
P12REF
P0TP
P0TN
AAGND
J4 Male Straight Molex_6410
HDSTP_C
HDSTP_NC
J3 Male Straight Molex_6410
LIMSWI_C
LIMSWI_NC
J2 Straight Male Molex_6410
CODA
CODB
DIGGND
P5V
A1
A2
A3
A4
A5
R1 20 0.5W 1%
R2 20 0.5W 1%
R7 1K 1% 0.125W
R8 1K 1% 0.125W
U1 26ls31
VCC=P5V,GROUND=DIGGND
R3 47.5 0.5W 1%
R4 47.5 0.5W 1%
R5 47.5 0.5W 1%
R6 47.5 0.5W 1%
J1 Male Straight Sub_d
PHBP
PHBN
PBV
DIGGND
PHAN
PHAP
U2 s7805
Vout
GND
V+
C1 22µF 35V 10%
C2 22µF 35V 10%
C3 100nF 100V 10%
D1 SA15
C4 decoupling B1
C4 100nF 100V 10%

Blank page.

SHEET MODIFICATIONS

MODIFICATIONS : A

MODIF. REF.	SHEET NO.	CROSS REF.	EXPLANATION	DDM OR SPR
A1	SH1	C5	REMOVE R1 R2	SPR:BUCge 06665
A2	SH1	B6	REPLACE R1 BY A STRAP	
A3	SH1	D6	REPLACE R2 BY A STRAP	
A4	SH1	B6	ADD A RESISTOR BETWEEN P5V AND PIN 1 OF U1(R7)	
A5	SH1	B6	ADD A RESISTOR BETWEEN P5V AND PIN 9 OF U1(R8)	

COLLISION SENSOR BLOCK DIAGRAM

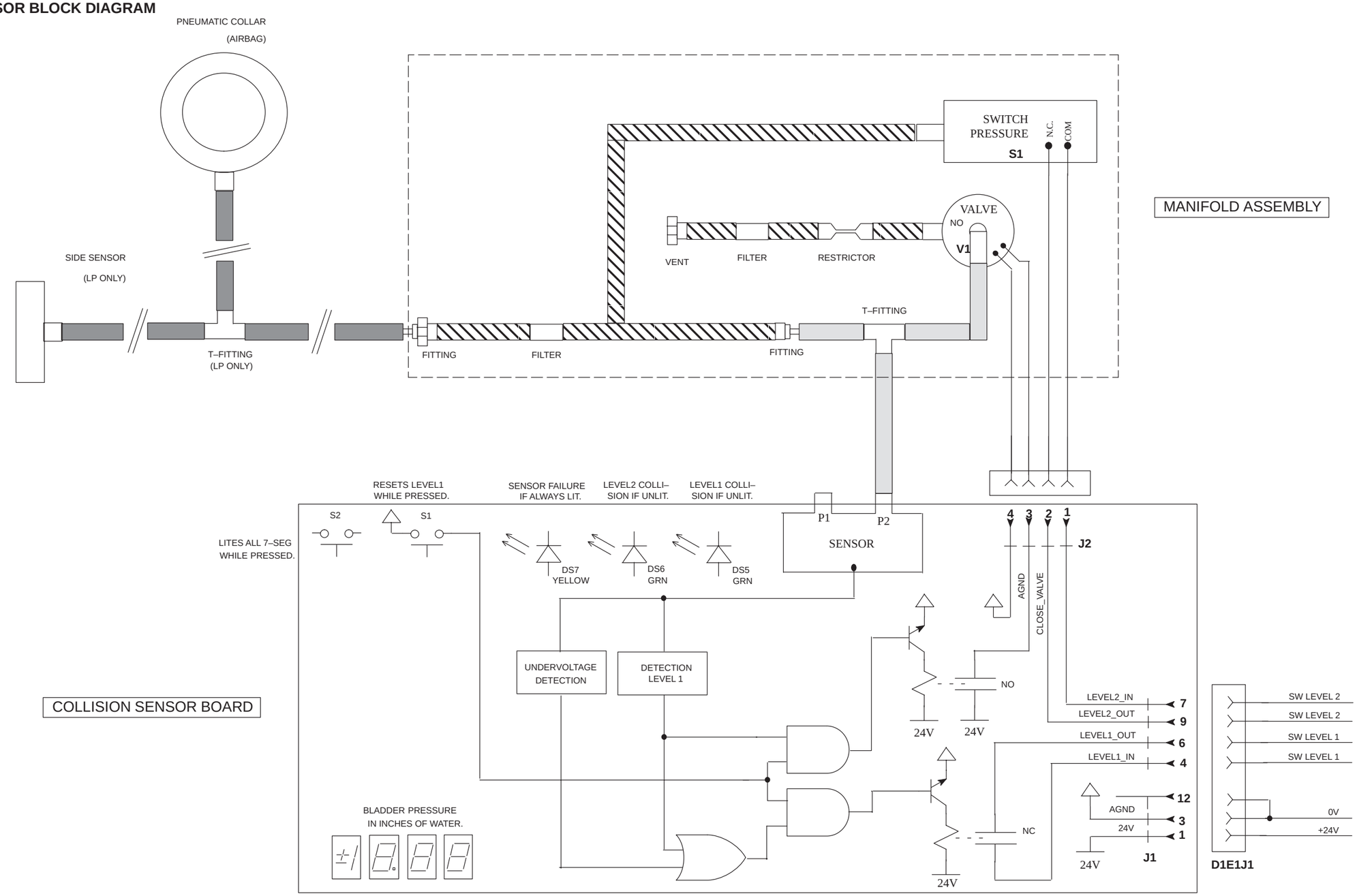

PNEUMATICS KEY:

CONNECTIONS IN MANIFOLD BLOCK.

1/4 INCH DIA PVC TUBING (CLEAR).

1/4 INCH DIA POLYURETHANE TUBING (WHITE).

NOTES:

1. SWITCH S1 FACTORY ADJUSTED TO OPEN AT 5.0 +/– 0.2 INCHES OF WATER ABOVE ATMOSPHERIC PRESSURE. SWITCH CLOSES AGAIN WHEN PRESSURE DROPS TO 2.5 +/– 0.5 INCHES WATER.

2. VALVE V1 DRIVEN CLOSED BY SENSOR BOARD ELEC– TRONICS. SWITCH POINT IS FACTORY ADJUSTED TO BE 0.30 +/– 0.02 INCHES WATER ABOVE ATMOSPHERIC PRES– SURE. VALVE DRIVEN OPEN AGAIN WHEN PRESSURE DROPS TO 0.12 +/– 0.02 INCHES WATER.

COLLISION SENSOR BOARD COMPONENT LAYOUT

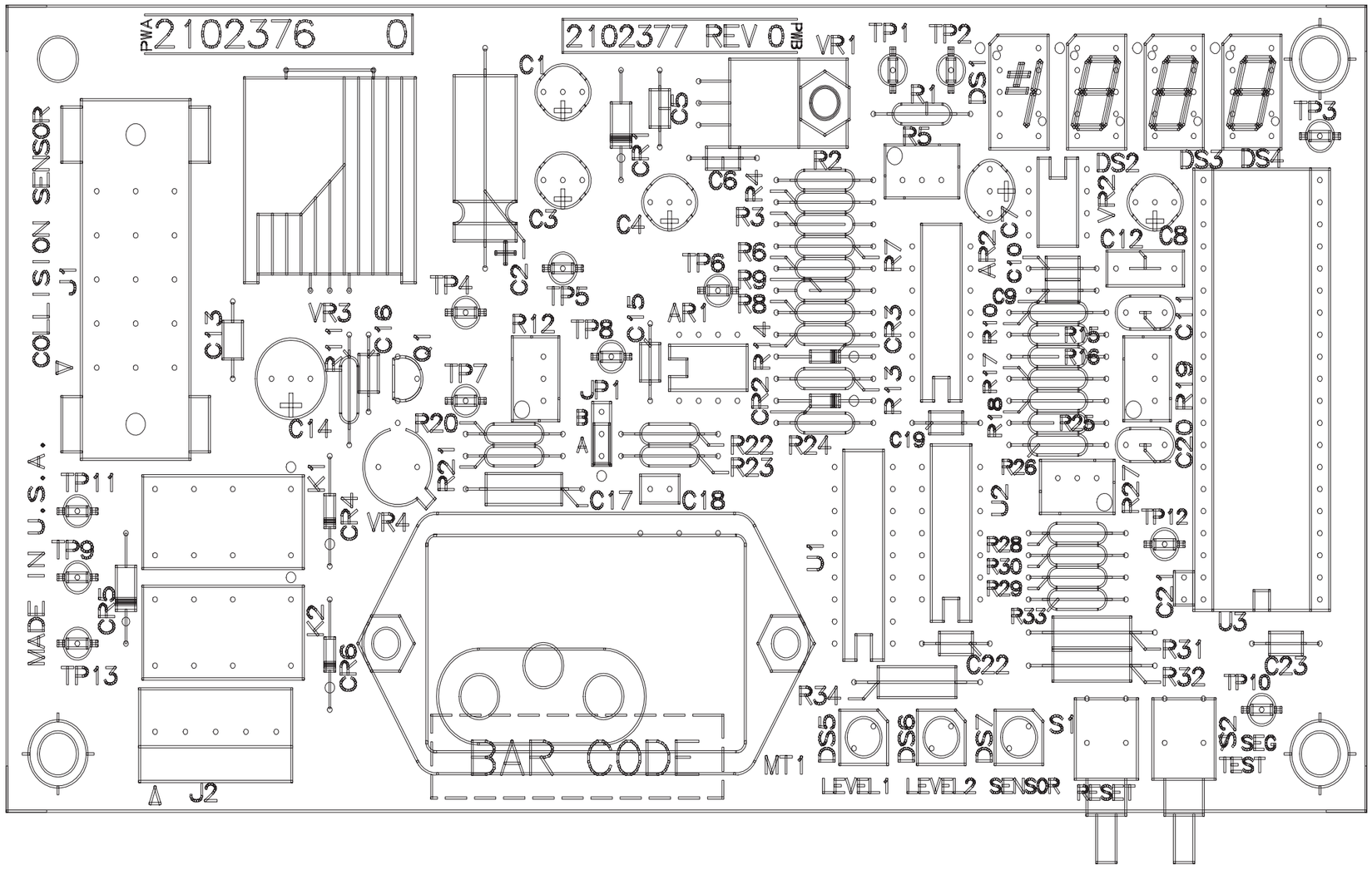

REVISION	PCN NUMBER	DATE	SIGN OFF
0	------	21-MAR-94	
1	180247	24-MAY-94	

SHEET_NAME	SHT NUM	REV
SENSOR_BOARD	1	1
SENSOR_BOARD	2	1
SENSOR_BOARD	3	1

NOTE:

VERIFY THIS PRINT IS THE LATEST REVISION USING GE PRODUCT STRUCTURE SYSTEM (PSS).

NOTES:

1. THE GROUP NUMBER AND GROUP REVISION FOR THIS PWA IS 2102376 0
2. THIS SCHEMATIC MEETS THE SPECIFICATIONS OF GE SCHEMATIC STANDARDS 46-017486.
3. UNLESS OTHERWISE SPECIFIED:
   RESISTORS ARE IN OHMS, 0.25W, 1%.
   CAPACITORS ARE IN FARADS.
   INDUCTORS ARE IN HENRIES.
4. ACTIVE LOW SIGNALS ARE INDICATED WITH "*" AFTER THE SIGNAL NAME

BLOCK PATHNAME /user/collision_sensor/sensor_board

BLOCK SHT 1 OF 3

REV 1 PCN 180247 DESCRIPTION ADD FACTORY ADJUSTMENT PROCEDURE
MADE BY D. BOTTOM DATE 27MAY94 APPR BY DATE
REV 2 PCN DESCRIPTION
MADE BY DATE APPR BY DATE

MADE D. BOTTOM DATE 21MAR94
CHECK D. BOTTOM DATE 21MAR94
APPR J. WOODS DATE 21MAR94
OTHER T. HELMINIAK DATE 21MAR94

GE MEDICAL SYSTEMS
Milwaukee, WI USA

DESIGN TITLE SENSOR_BOARD
FIRST MADE FOR LC/LP
DRAWING NO. 2102376SCH | REV 1 | SIZE B | SHT./CONT. ON 1/2

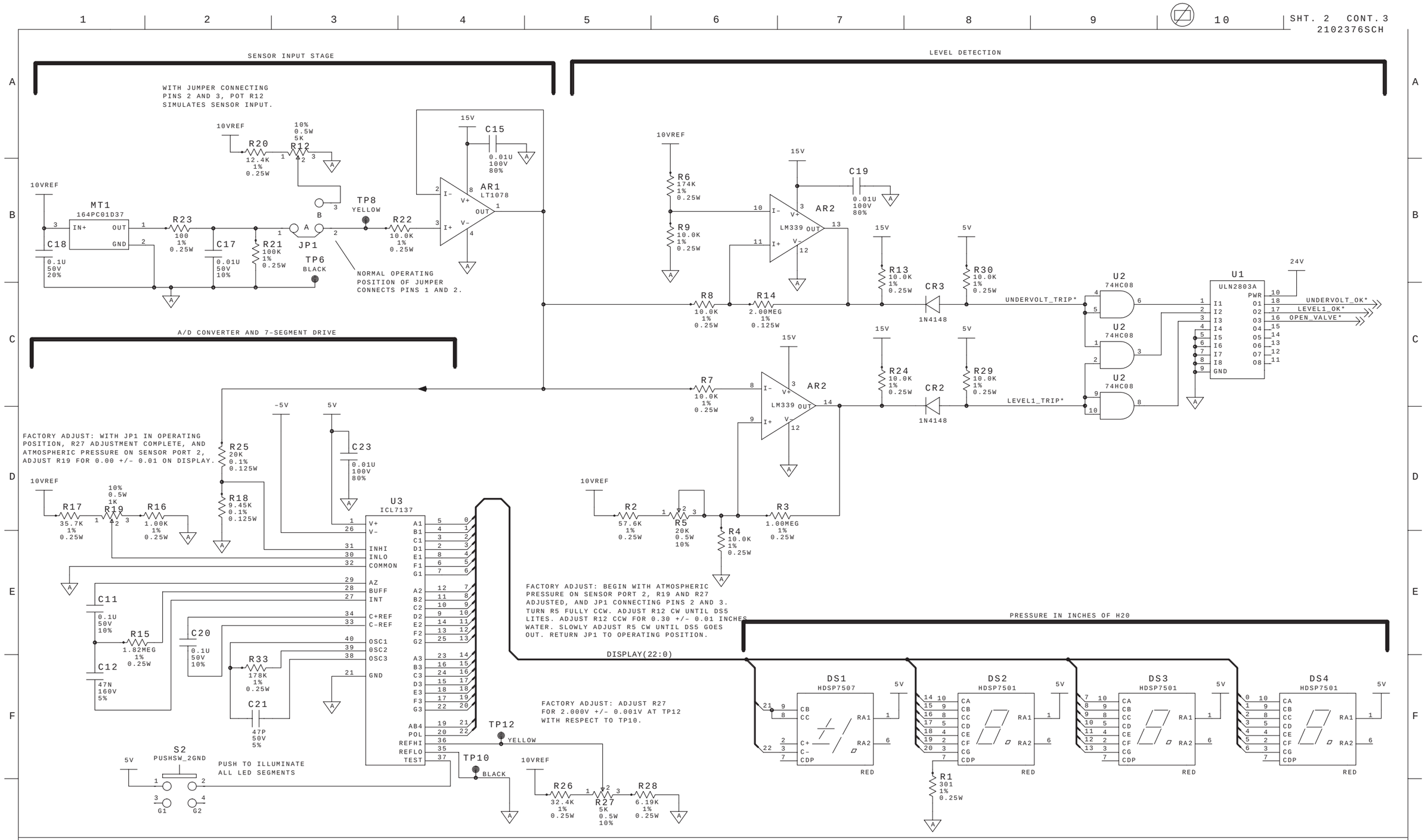

BLOCK PATHNAME /user/collision_sensor/sensor_board

BLOCK SHT 2 OF 3

REV 1 PCN 180247	DESCRIPTION ADD FACTORY ADJUSTMENT PROCEDURE		
MADE BY D. BOTTOM	DATE 27MAY94	APPR BY	DATE
REV 2 PCN	DESCRIPTION		
MADE BY	DATE	APPR BY	DATE

MADE D. BOTTOM	DATE 21MAR94	
CHECK D. BOTTOM	DATE 21MAR94	
APPR J. WOODS	DATE 21MAR94	
OTHER T. HELMINIAK	DATE 21MAR94	

GE MEDICAL SYSTEMS
Milwaukee, WI USA

DESIGN TITLE SENSOR_BOARD
FIRST MADE FOR LC/LP

DRAWING NO.	REV	SIZE	SHT./CONT. ON
2102376SCH	1	B	2/3

ELECTRONIC BOARDS

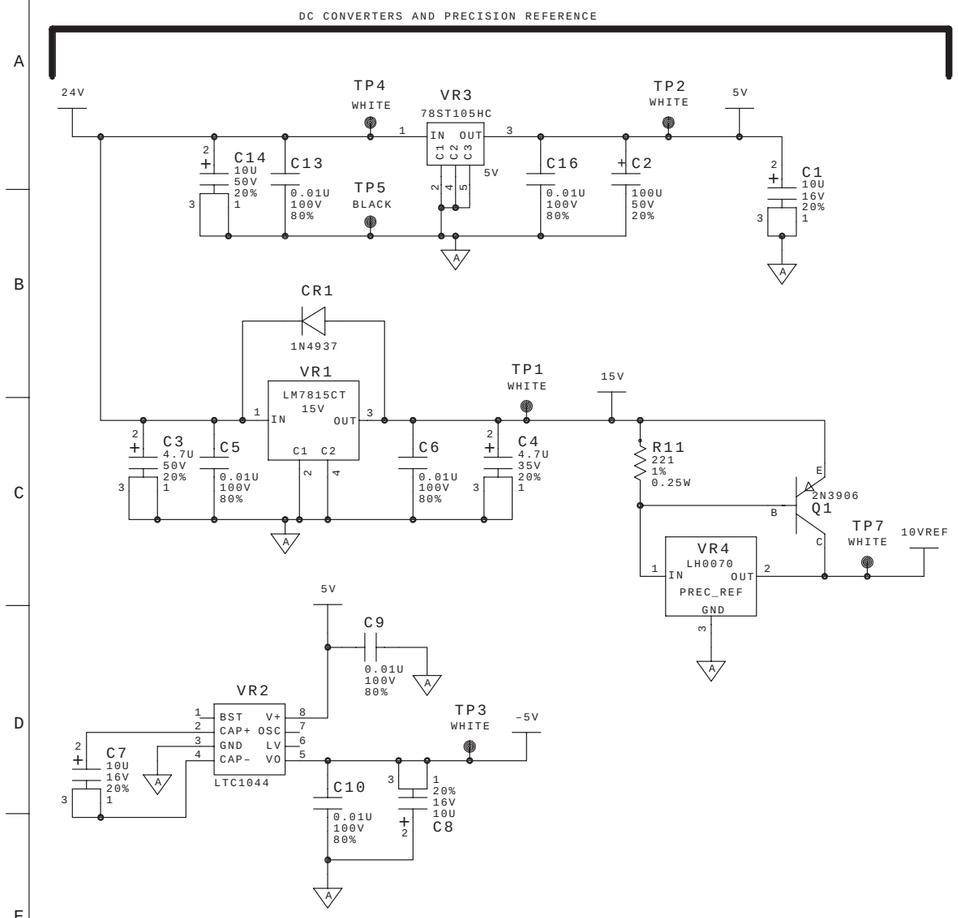

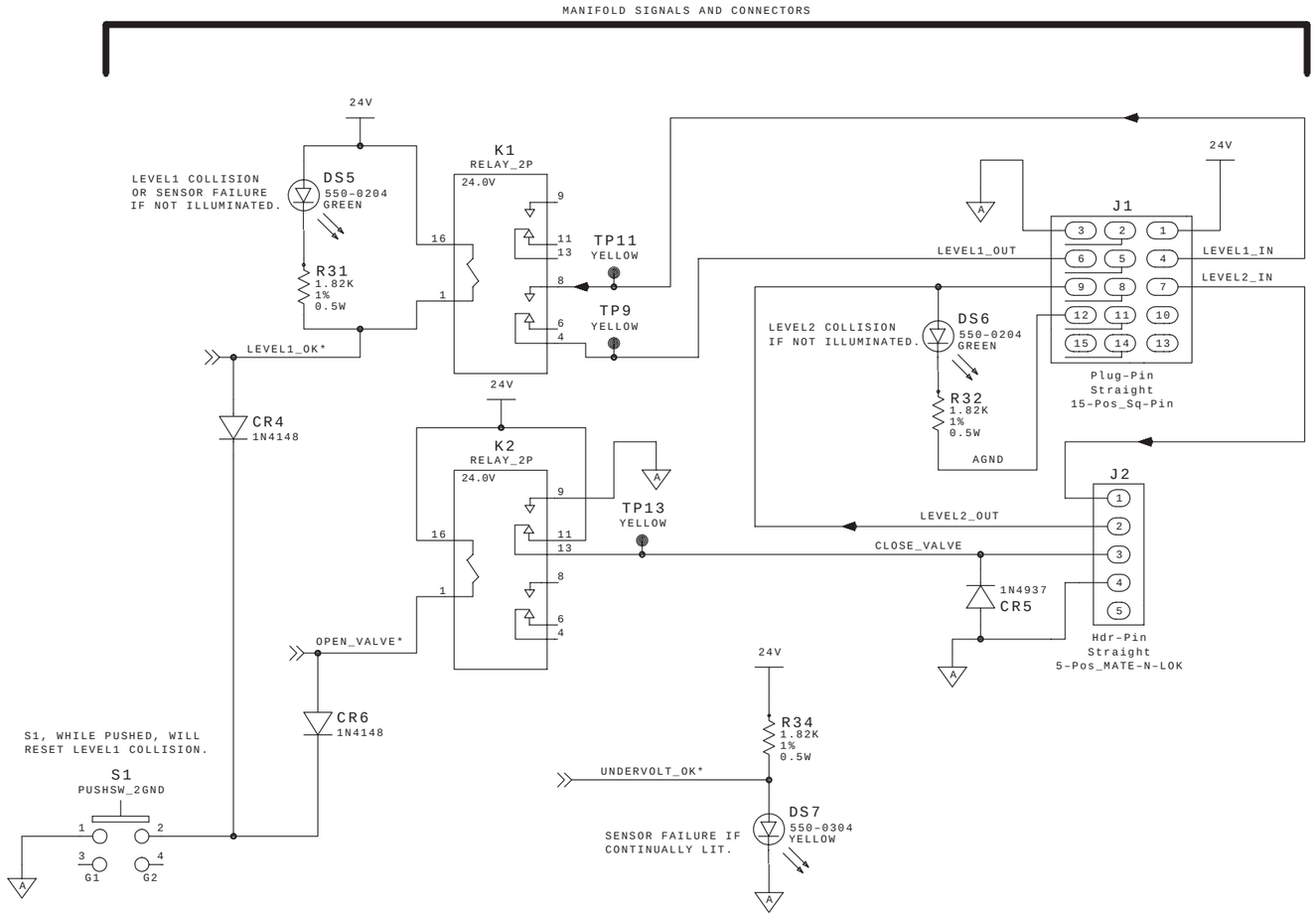

SPARE DEVICES

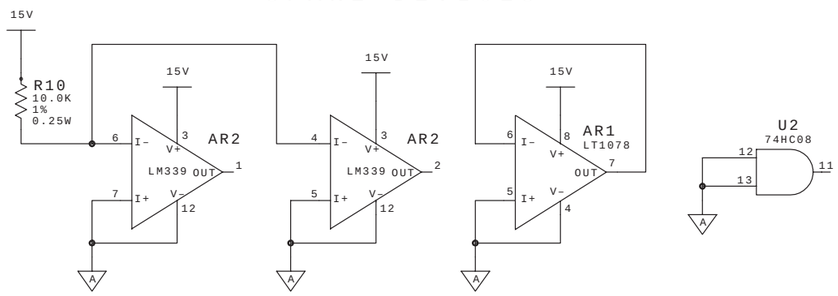

DEVICE CODES

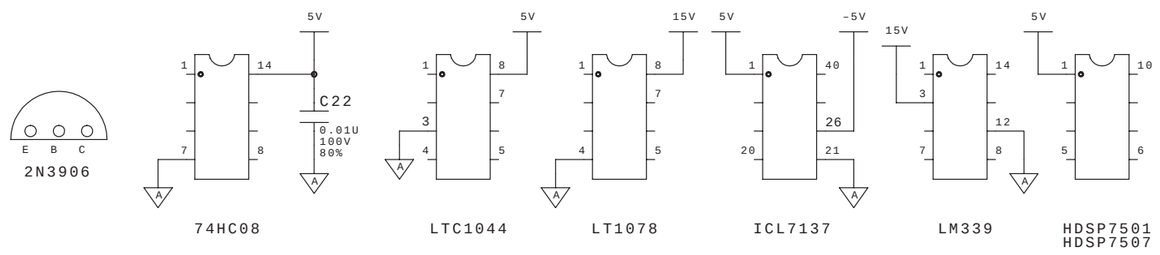

BLOCK PATHNAME /user/collision_sensor/sensor_board			BLOCK SHT 3 OF 3		
REV 1 PCN 180247 DESCRIPTION ADD FACTORY ADJUSTMENT PROCEDURE	MADE D. BOTTOM	DATE 21MAR94	GE MEDICAL SYSTEMS	DESIGN TITLE SENSOR_BOARD	
MADE BY D. BOTTOM DATE 27MAY94 APPR BY DATE	CHECK D. BOTTOM	DATE 21MAR94	Milwaukee, WI USA	FIRST MADE FOR LC/LP	
REV 2 PCN DESCRIPTION	APPR J. WOODS	DATE 21MAR94		DRAWING NO. 2102376SCH	REV 1 / SIZE B / SHT./CONT. ON 3/-
MADE BY DATE APPR BY DATE	OTHER T. HELMINIAK	DATE 21MAR94			